US008408929B2

(12) **United States Patent**
Solon

(10) **Patent No.: US 8,408,929 B2**
(45) **Date of Patent: Apr. 2, 2013**

(54) **GUARD FOR CONNECTION POINT OF ADJOINED WIRE CONNECTORS**

(75) Inventor: **Dean Solon**, Gallatin, TN (US)

(73) Assignee: **Shoals Technologies Group, LLC**, Portland, TN (US)

(*) Notice: Subject to any disclaimer, the term of this patent is extended or adjusted under 35 U.S.C. 154(b) by 0 days.

(21) Appl. No.: **13/072,821**

(22) Filed: **Mar. 28, 2011**

(65) **Prior Publication Data**

US 2012/0252258 A1 Oct. 4, 2012

(51) **Int. Cl.**
H01R 13/639 (2006.01)

(52) **U.S. Cl.** **439/301**; 439/369

(58) **Field of Classification Search** 439/301, 439/369, 367

See application file for complete search history.

(56) **References Cited**

U.S. PATENT DOCUMENTS

4,643,505	A *	2/1987	House et al.	439/369
4,676,572	A *	6/1987	Booker	439/301
4,849,580	A *	7/1989	Reuter	174/92
5,099,088	A *	3/1992	Usami et al.	174/76
5,259,782	A *	11/1993	Giffin	439/367
7,189,100	B1 *	3/2007	Colbourne	439/369
7,384,297	B2 *	6/2008	King et al.	439/369
7,465,182	B1 *	12/2008	McDonald	439/369
2004/0097120	A1 *	5/2004	Limber et al.	439/369
2010/0255704	A1 *	10/2010	Gardner et al.	439/301
2011/0275233	A1 *	11/2011	Benear	439/278

* cited by examiner

Primary Examiner — Gary F. Paumen

(74) *Attorney, Agent, or Firm* — Carla Gannon Law

(57) **ABSTRACT**

A cylindrical guard is used for protecting the electrical junction between connectors. The guard is essentially two split cylindrical sections oriented end-to-end with breakaway tabs therebetween. The split cylindrical pieces are hinged, and substantially irreversibly lock together in a "clamshell" like fashion. The resulting guarded junction is less likely to be accidentally disengaged, thereby protecting both property and life. The guard can be removed by cutting, or broken and moved to expose the underlying junction by severing the breakaway tabs.

15 Claims, 9 Drawing Sheets

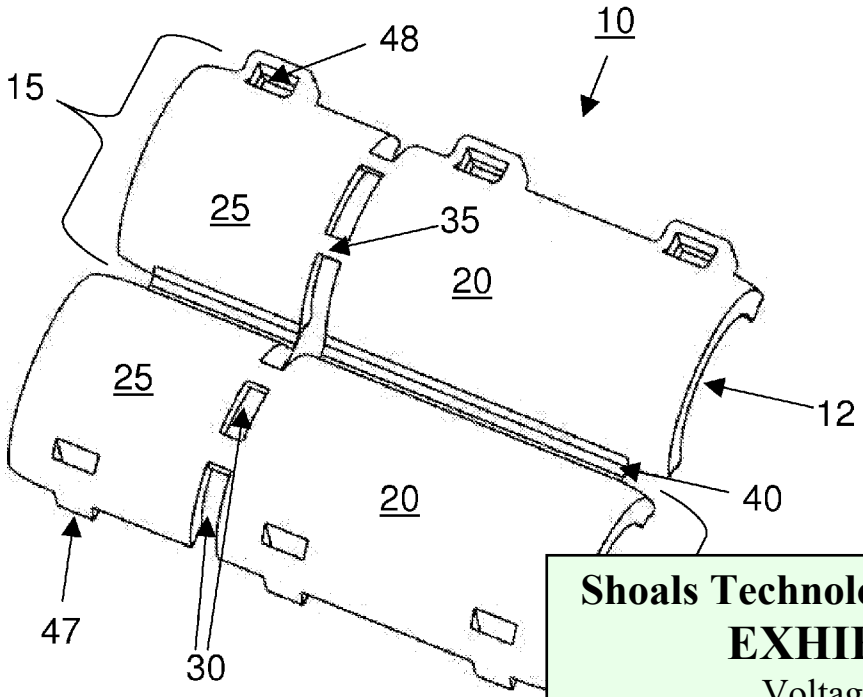

Shoals Technologies Group, LLC
EXHIBIT 2007
Voltage, LLC v.
Shoals Technologies Group, LLC
IPR2024-00876

US008408929B2

(12) **United States Patent**
Solon

(10) **Patent No.: US 8,408,929 B2**
(45) **Date of Patent: Apr. 2, 2013**

(54) **GUARD FOR CONNECTION POINT OF ADJOINED WIRE CONNECTORS**

(75) Inventor: **Dean Solon**, Gallatin, TN (US)

(73) Assignee: **Shoals Technologies Group, LLC**, Portland, TN (US)

(*) Notice: Subject to any disclaimer, the term of this patent is extended or adjusted under 35 U.S.C. 154(b) by 0 days.

(21) Appl. No.: **13/072,821**

(22) Filed: **Mar. 28, 2011**

(65) **Prior Publication Data**

US 2012/0252258 A1 Oct. 4, 2012

(51) **Int. Cl.**
H01R 13/639 (2006.01)

(52) **U.S. Cl.** **439/301**; 439/369

(58) **Field of Classification Search** 439/301, 439/369, 367

See application file for complete search history.

(56) **References Cited**

U.S. PATENT DOCUMENTS

4,643,505 A * 2/1987 House et al. 439/369
4,676,572 A * 6/1987 Booker 439/301
4,849,580 A * 7/1989 Reuter 174/92
5,099,088 A * 3/1992 Usami et al. 174/76
5,259,782 A * 11/1993 Giffin 439/367
7,189,100 B1 * 3/2007 Colbourne 439/369
7,384,297 B2 * 6/2008 King et al. 439/369
7,465,182 B1 * 12/2008 McDonald 439/369
2004/0097120 A1 * 5/2004 Limber et al. 439/369
2010/0255704 A1 * 10/2010 Gardner et al. 439/301
2011/0275233 A1 * 11/2011 Benear 439/278

* cited by examiner

Primary Examiner — Gary F. Paumen

(74) *Attorney, Agent, or Firm* — Carla Gannon Law

(57) **ABSTRACT**

A cylindrical guard is used for protecting the electrical junction between connectors. The guard is essentially two split cylindrical sections oriented end-to-end with breakaway tabs therebetween. The split cylindrical pieces are hinged, and substantially irreversibly lock together in a "clamshell" like fashion. The resulting guarded junction is less likely to be accidentally disengaged, thereby protecting both property and life. The guard can be removed by cutting, or broken and moved to expose the underlying junction by severing the breakaway tabs.

15 Claims, 9 Drawing Sheets

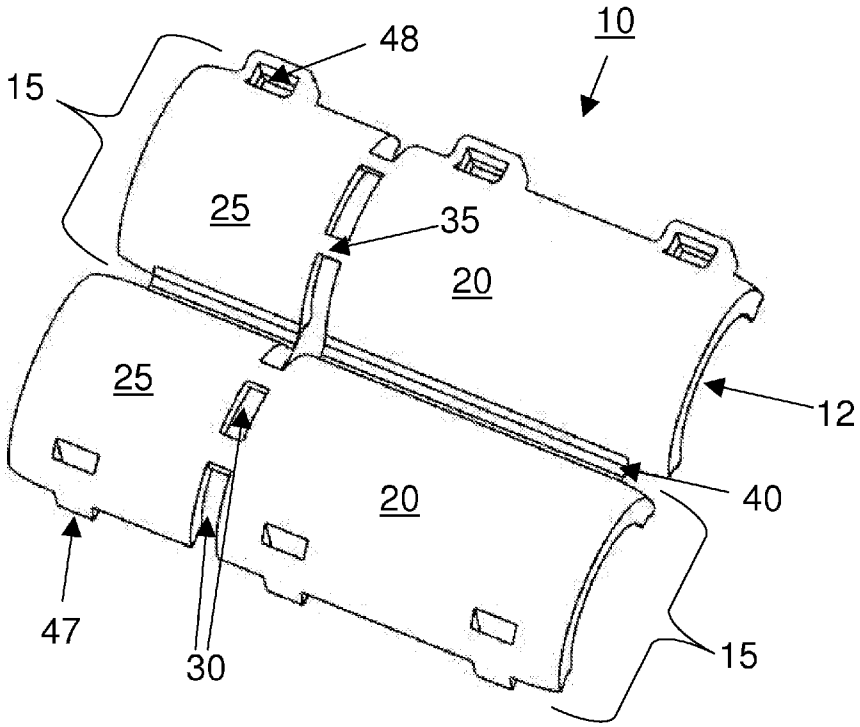

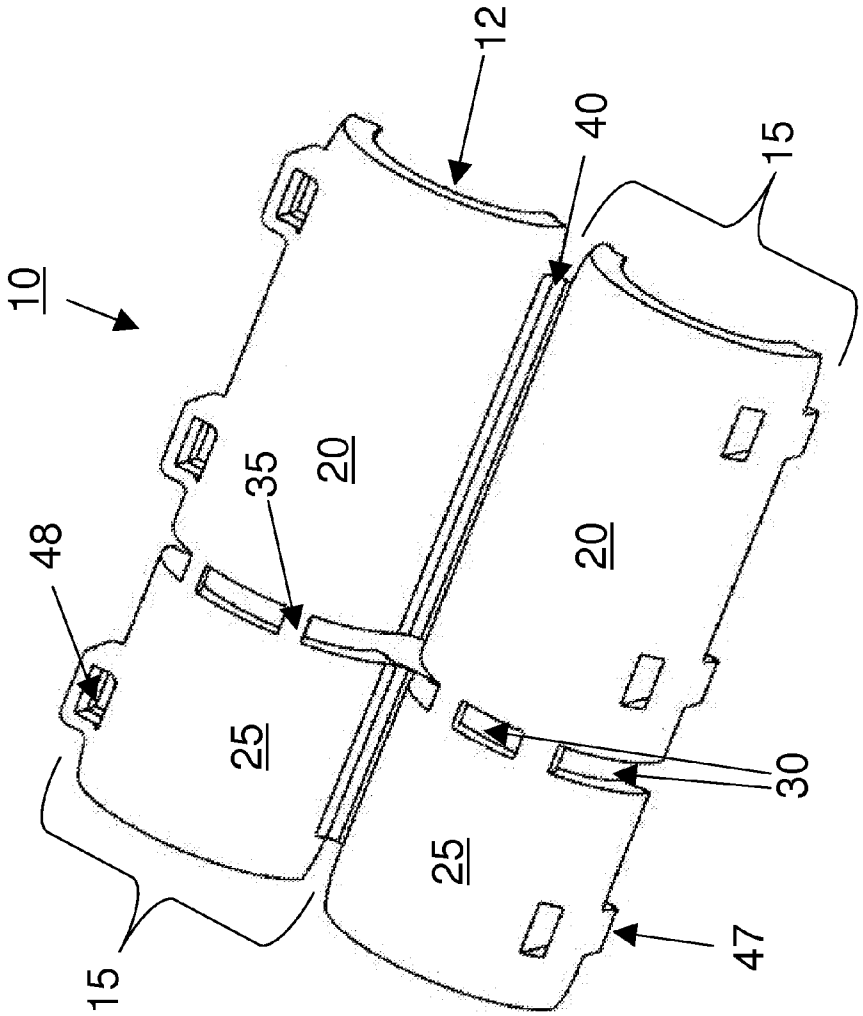

FIG. 1

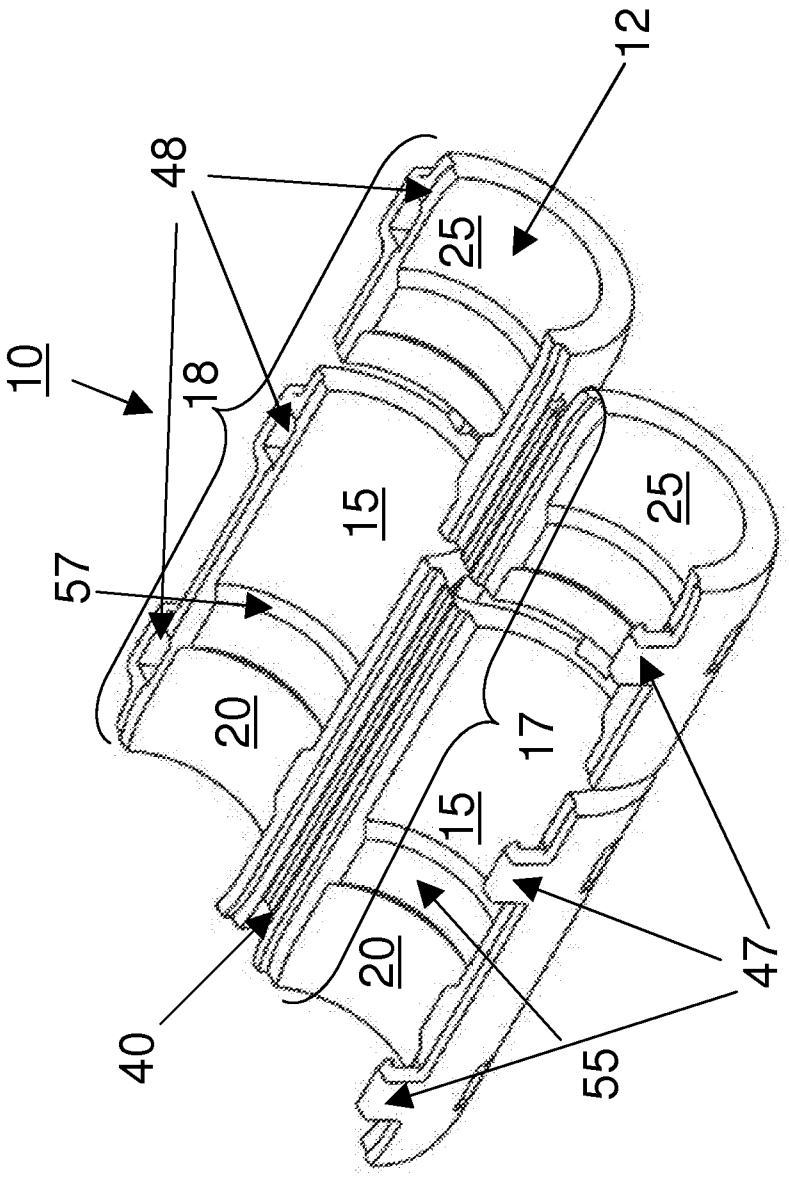

FIG. 2

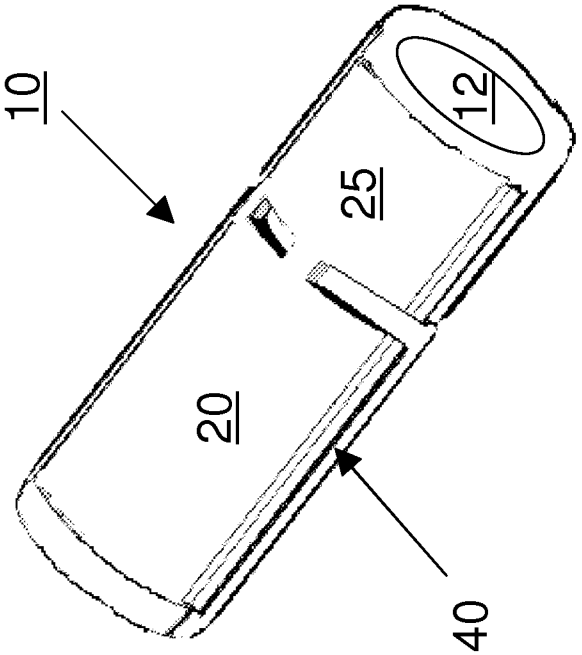

FIG. 3

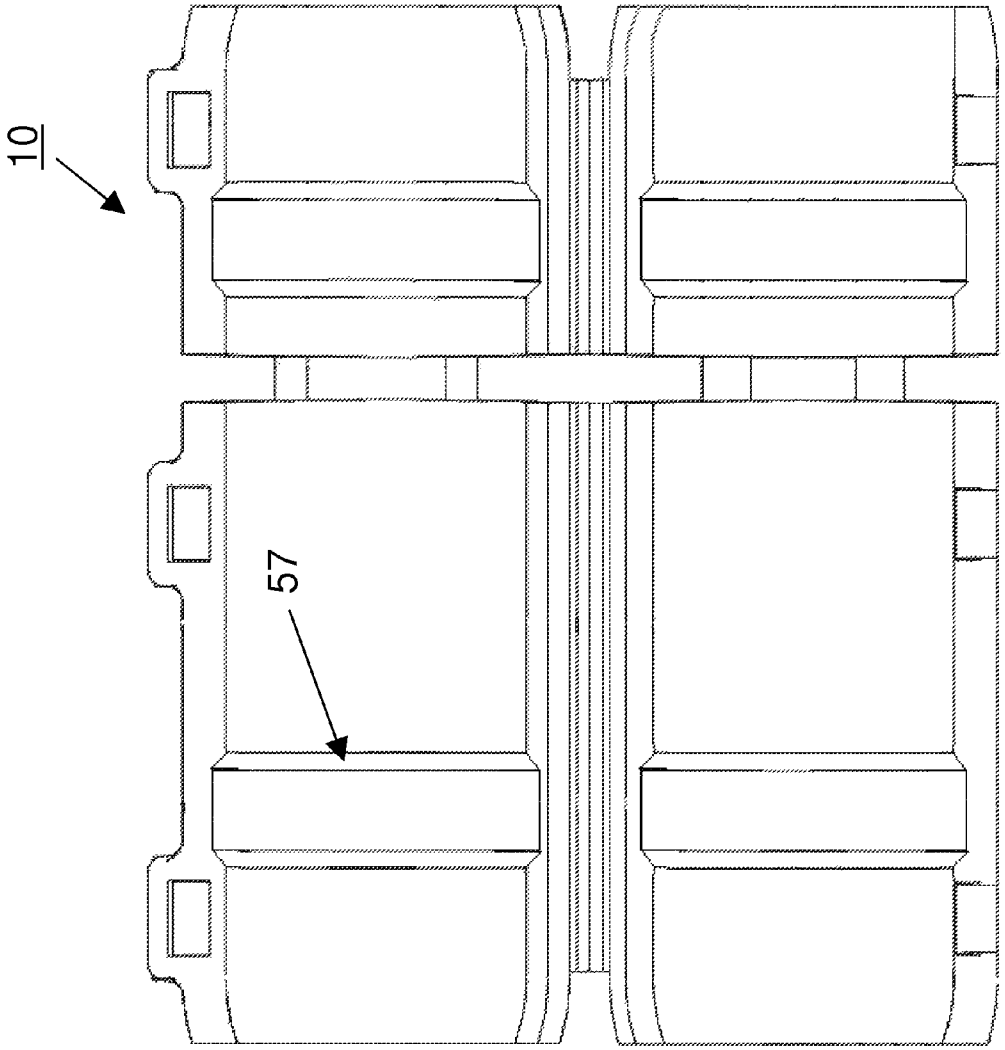

FIG. 4

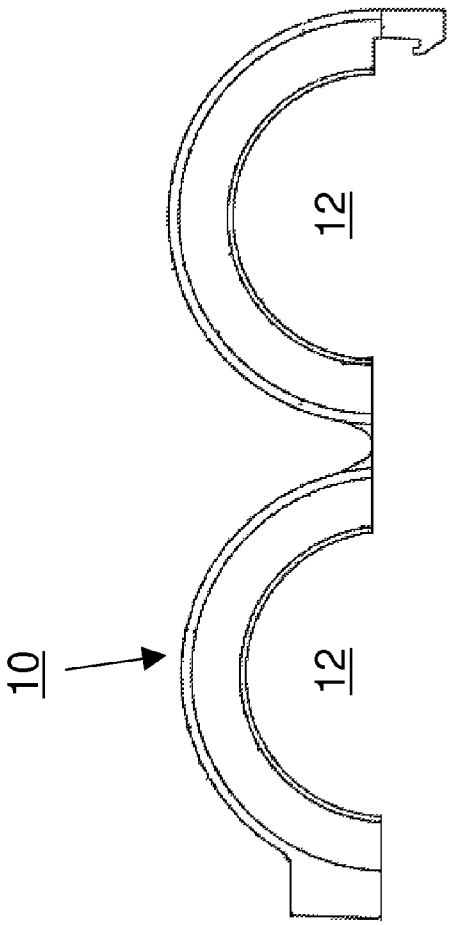

FIG. 5

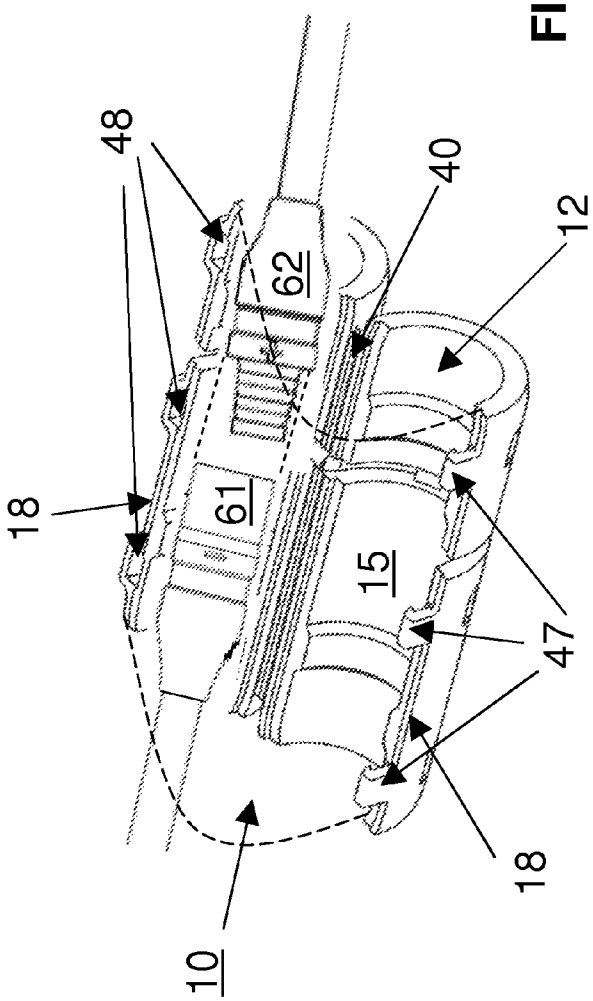

FIG. 6

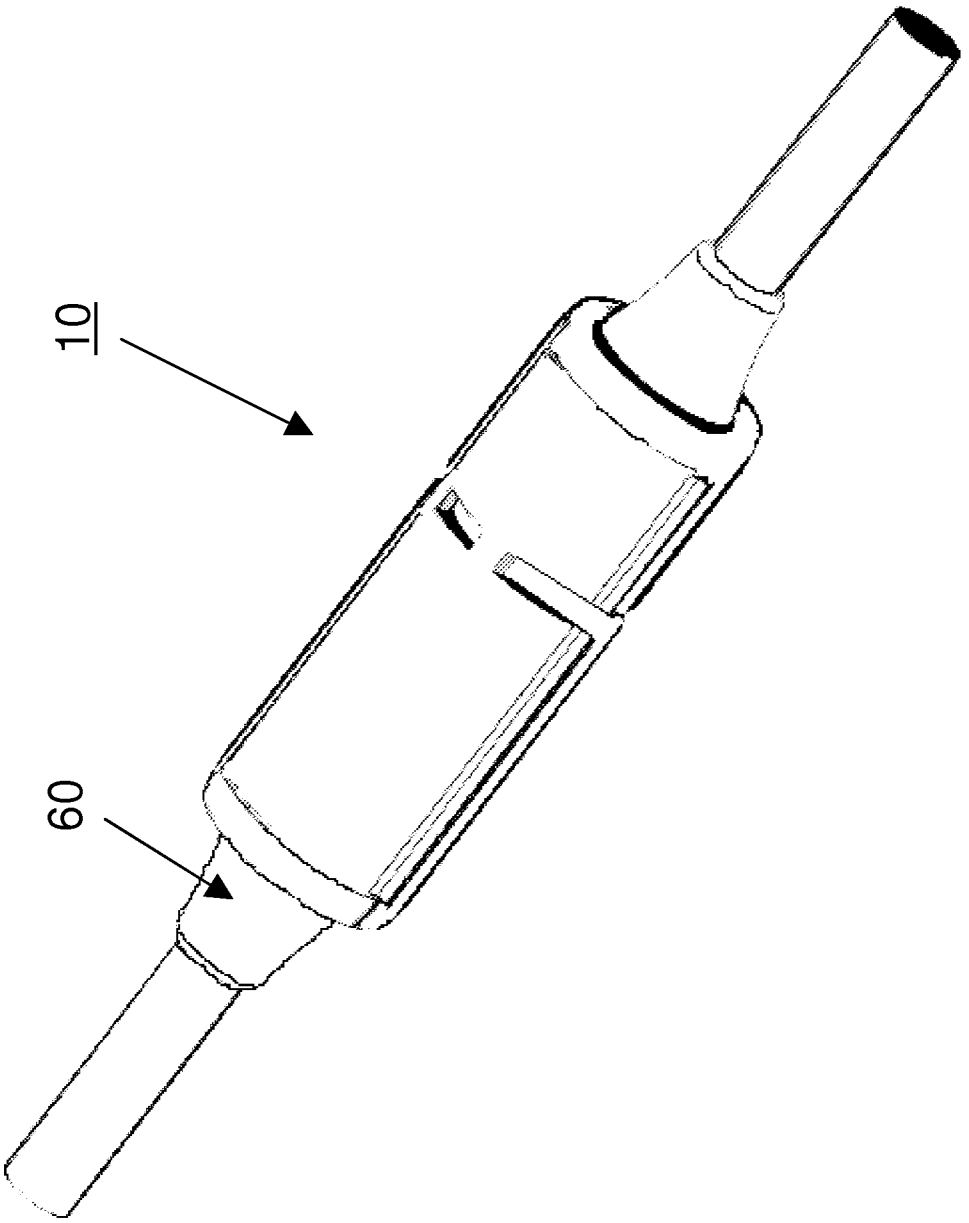

FIG. 7

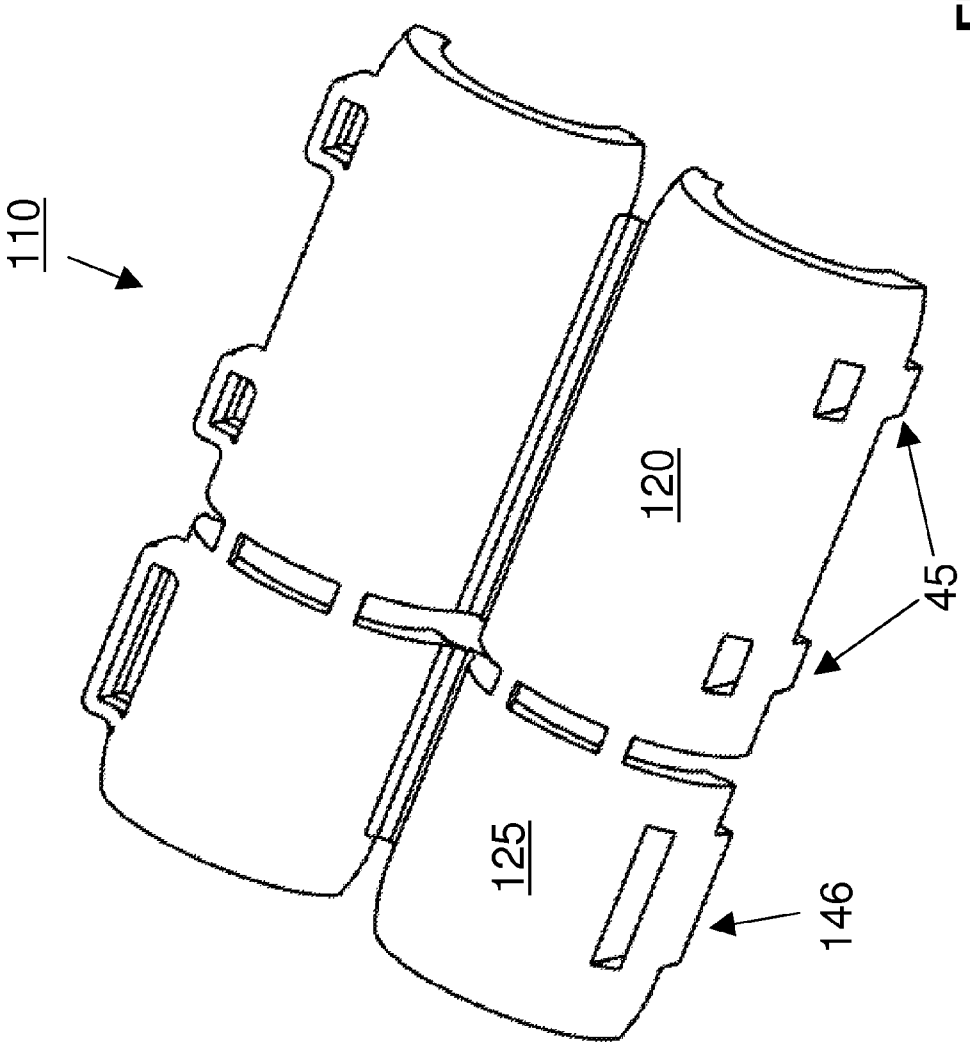

FIG. 8

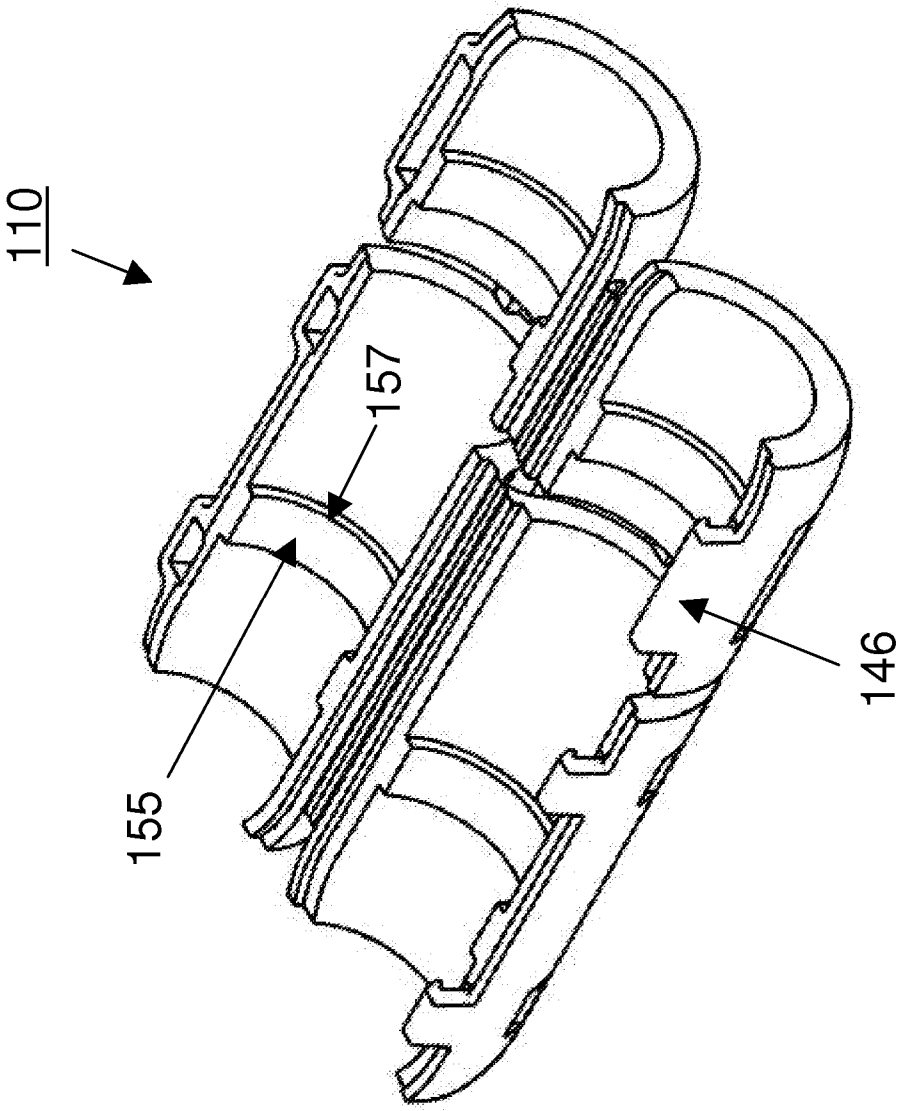

FIG. 9

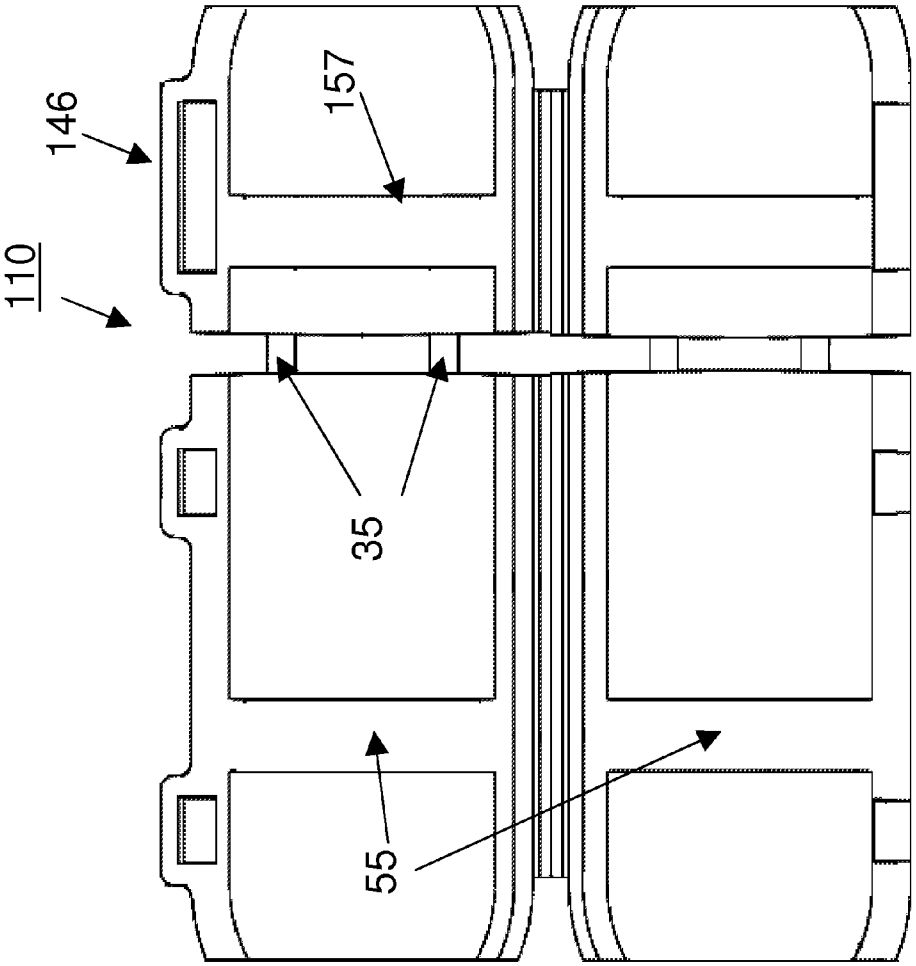

FIG. 10

GUARD FOR CONNECTION POINT OF ADJOINED WIRE CONNECTORS

BACKGROUND

(1) Field

The present invention relates generally to devices that protect wiring assemblies and, more particularly, to a hinged, split, tubular structure that irreversibly snaps onto the connection point of two adjoined wire connectors.

(2) Related Art

The invention discussed herein can be used with connectors disclosed in U.S. patent application Ser. No. 12/502,395, pertaining to "Low Leakage Electrical Joints and Wire Harnesses, and Method of Making the Same", filed on Jul. 14, 2009, which is hereby incorporated by reference.

Solar power has long been considered a niche utility. It is considered desirable from an environmental and political standpoint, but perhaps not economically feasible for generating enough power to make a meaningful contribution to the grid. However, as the problems associated with our dependence on fossil fuels have become better understood, more attention has been paid to so-called alternative energy such as solar power. This attention has led to significant technological and policy advances, such that solar power is now quite prevalent, and more economically feasible.

Technological advances in the generation of solar energy have occurred in multiple areas, including collector material and structure, and wiring infrastructure. In particular, certain advances in devices used in the electrical infrastructure have increased safety and reliability, while decreasing labor and cost. One example is the use of wire harnesses, male and female connectors, and low-leakage T, cross and Y joints. These devices facilitate correctly wiring a solar energy system using plug-and-play components, versus hard-wiring using conventional methods and materials such as wire, crimps, cutting, welding, testing, etc. This technology is explained in more detail in patent application Ser. No. 12/502,395.

It is advantageous if connectors, such as male and female connectors, can be easily engaged and disengaged because this facilitates on-the-fly wiring without having to measure, cut, weld, etc. However, this unfortunately also creates the possibility of inadvertent disengagement, especially when wiring architecture is above ground, as it commonly is, where people can trip on the wires. Such a disconnection may simply temporarily cut off one solar panel in an array, or may be catastrophic with respect to widespread damage to the system, or even risk of electrocution.

In addition, it is desirable that electrical standards are met to ensure compliance with code, as well as safety.

Thus, there remains a need for a new and improved device for guarding the connection point of two adjoined connectors. Preferably the device is inexpensive to manufacture and transport, and is quick and easy to use. Preferably this device locks into place and is difficult to accidentally remove. Most preferably the device is a hinged cylindrical structure constructed of plastic, that irreversibly engages to firmly grasp an electrical junction within the interior channel. Finally, preferably the device meets or exceeds the recommendations of the 2008 National Electrical Code, section 690.32(c).

SUMMARY OF THE INVENTIONS

The present invention is directed to a guard that quickly fits around the junction of joined connectors. The guard is essentially two cylinders which are joined in an end-to-end orientation with a tabbed gap there between, to form one discontinuous cylinder. The resulting longitudinally split, discontinuous cylinder has a hinge joining two halves of the cylinder longitudinally, and spaced irreversibly locking mechanisms joining the other halves of the cylinder when the cylinder is in the closed position. The tabs connecting the two cylinders can be intentionally broken, but are strong enough to prevent accidental exposure of the surrounded junction.

Accordingly, one aspect of the present inventions is to provide a connector guard that is easy to use and prevents accidental disengagement of connectors. It is also an aspect of the present inventions to provide a device that can be quickly and easily removed when desired, by using common electrical tools. Another aspect is to be able to expose the underlying connector without actually removing the invention, by twisting the device. Another aspect is providing frictional grips within the device to prevent the connection from slipping around.

These and other aspects of the present inventions will become apparent to those skilled in the art after a reading of the following description of the preferred embodiment when considered with the drawings.

BRIEF DESCRIPTION OF THE DRAWING

FIG. **1** is a perspective view of the exterior of a preferred embodiment of the invention shown in the open position;

FIG. **2** is a perspective view of the interior of a preferred embodiment of the invention shown in the open position;

FIG. **3** is a perspective view of a preferred embodiment of the invention shown in the closed position;

FIG. **4** is a plan view of the interior of a preferred embodiment of the invention shown in the open position;

FIG. **5** is a side view of the invention shown in the open position;

FIG. **6** schematically shows disengaged connectors positioned in the channel of the invention in the open position;

FIG. **7** is a perspective view of the invention with connectors guarded inside;

FIG. **8** is a perspective view of the exterior of an alternative embodiment of the invention shown in the open position;

FIG. **9** is a perspective view of the interior of an alternative embodiment of the invention shown in the open position; and

FIG. **10** is a plan view of the interior of an alternative embodiment of the invention shown in the open position.

DESCRIPTION OF THE PREFERRED EMBODIMENTS

In the following description, like reference characters designate like or corresponding parts throughout the several views. It should be understood that the illustrations are for the purpose of describing a preferred embodiment of the inventions and are not intended to limit the inventions thereto.

As best seen in FIG. **1**, guard **10** generally includes two semi-cylindrical sections **15**, **15**, that are joined together at hinge **40**. As used herein "semi-cylindrical" conceptually refers to approximately half, or approximately 180°, of a generally cylindrical or tubular structure that has been longitudinally divided. It should be understood that "semi-cylindrical" does not preclude breaks in symmetry such as planar sections or the addition of structures such as locking mechanisms, tabs and the like. Semi-cylindrical sections **15**, **15** each include large section **20** and small section **25**, which are connected to each other by at least one tab **35**. Two tabs per section **15**, for a total of four tabs per guard **10**, is preferred. Large and small sections **20**, **25** define gap **30** therebetween,

with tabs **14** connecting sections **20**, **25** across gap **30**. Tabs **35** are preferably breakaway tabs, which, as use herein, are tabs that provide suitable strength to maintain integrity with regular use, but are specifically designed to "breakaway", or be broken, with the application of a minimum amount of human effort, either with or without standard electrical tools. In particular, when guard **10** is in situ, for example see FIG. **7**, a user can grasp large section **20** in one hand, small section **25** in the other hand, and rotate the sections in opposite directions to sever tabs **35**, then pull the connectors away from each other, to expose the electrical junction underneath.

Referring to FIG. **2**, semi-cylindrical sections **15**, **15** each include proximal longitudinal edge **17**, which abut hinge **40**, and distal longitudinal edge **18**, away from hinge **40**. Hinge **40** is preferably constructed of the same material as the remainder of guard **10**, thereby lending the device to injection molding or other known methods of economical mass production. Distal longitudinal edges **18** include locking mechanisms that are aligned so that mating portions, for example locking tab **47** and locking aperture **48**, (collectively locking mechanism **45**) connect upon closure of guard **10**. While locking tab and aperture **47**, **48** are preferred, other locking mechanisms known in the art, such as latches, or ball and sockets, would also be suitable. Locking mechanism **45** is preferably capable of irreversible engagement. As used herein, "irreversible engagement" refers to engagement wherein a user would not be able to "unlock" the mechanism, or otherwise "undo" the engagement in regular use, without using unusual force or the assistance of tools. In the most preferred embodiment, large section **20** includes two locking mechanisms **45** and small section **25** includes one locking mechanism, with all locking mechanisms **45** identical. This orientation is shown in FIG. **1**. However, as depicted in FIG. **8**, alternative guard **110** could include elongated locking mechanism **146** on alternative small section **125**, and two identical locking mechanisms **45** on alternative large section **120**.

Referring back to FIG. **2**, the interior portions of semi-circular sections **15** define at least one semi-circumferential rib **55**, with each large section **20** and each small section **25** preferably defining one rib **55**, for a total of four ribs **55**. Ribs **55** are oriented so that upon closure of guard along axis of hinge **40**, rib sections **55** align in end-to-end orientation, thereby forming "rings" within channel **12** of guard **10**. Ribs **55** exert additional frictional pressure on electrical connectors **60** within channel **12**, thereby maintaining the longitudinal position of the junction held within. This is generally shown in FIG. **6**. Said another way, ribs **55** help prevent connector **60** from slipping within channel **12**, as shown in FIG. **7**. In the preferred embodiment, rib **55** includes chamfer **57**, (FIG. **2**) but straight wall **157** is also possible, as shown in alternative guard **110** (FIG. **9**).

Referring now to FIG. **6**, in use, one would connect female connector **61** to male connector **62**, then circumferentially surround the resulting connection, or junction, in guard **10** by rotating one semi-cylindrical section **15** around the axis of hinge **40**, thereby bringing distal longitudinal edges **18** together, and engaging locking tabs **47** with locking apertures **48**. The resulting orientation is depicted in FIG. **7**. To remove the guard **10**, a user would preferably employ cutters to cut off guard **10**. As discussed above it is also possible to expose junction by twisting to sever breakaway tabs **35**.

Guard **10** is preferably constructed of Polypropylene using known techniques such as injection molding.

Guard **10** meets meet the recommendations of the 2008 National Electrical Code, section 690.32(c). More specifically, a preferred embodiment was tested according to IEC61646 Damp Heat and UL1703 Thermal Cycling Testing, 3rd Edition, dated Mar. 15, 2002 with revisions through and including Apr. 8, 2008. This protocol is hereby incorporated in its entirety.

Certain modifications and improvements will occur to those skilled in the art upon a reading of the foregoing description. By way of example, it is possible to vary the number of clips, the number of breakaway tabs, the width of the breakaway tabs, the length of the device, the profile of the inside surface of the device, the design of the hinge, the material of the device, and/or the thickness of the material. It is also possible to eliminate the hinges so the device is two halves that snap together. It should be understood that all such modifications and improvements have been deleted herein for the sake of conciseness and readability but are properly within the scope of the following claims.

I claim:

1. A guard for the connection point of adjoining connectors, said guard comprising:

A) a first semi-cylindrical section including a first proximal longitudinal edge and a first distal longitudinal edge, said first semi-cylindrical section defining a first gap, said first gap apportioning said first semi-cylindrical section into a first large section and a first small section spanned therebetween with at least one breakaway tab;

B) a second semi-cylindrical section including a second proximal longitudinal edge and a second distal longitudinal edges;

C) a hinge connecting said first proximal longitudinal edge to said second proximal longitudinal edge;

D) a first locking mechanism adjacent said first distal longitudinal edge; and

E) a second locking mechanism adjacent said second distal longitudinal edge, said first and second closing mechanisms engageable one with the other.

2. The guard of claim **1** wherein said second semi-cylindrical section defines a second gap, said second gap apportioning said first semi-cylindrical section into a second large section and a second small section spanned therebetween with at least one tab.

3. The guard of claim **1** wherein the interior side of said first semi-cylindrical section includes a first semi-circumferential rib.

4. The guard of claim **3** wherein the interior side said second semi-cylindrical section includes a second semi-circumferential rib aligned end-to-end with said first semi-circumferential rib.

5. The guard of claim **1** wherein said first and second locking mechanisms irreversibly engage.

6. A protected low current, high voltage connection, said connection comprising:

A) a female connector including a first plug;

B) a male connector including a second plug, said first and said second plugs engaged at a junction; and

C) a substantially cylindrical guard, said guard including a large section and a small section connected by at least one breakaway tab, and said guard circumferentially surrounding said junction.

7. The connection of claim **6** wherein said guard includes a locking mechanism.

8. The connection of claim **7** wherein said locking mechanism is capable of substantially irreversible engagement.

9. The connection of claim **6** wherein said large section includes a first rib, said first rib frictionally maintaining the longitudinal position of said junction.

10. The connection of claim **9** wherein said small section includes a second rib, said second rib frictionally maintaining the longitudinal position of said junction.

11. A method of protecting an electrical connection comprising the acts of:

A) positioning a first semi-cylindrical section of a guard having a large section and a small section connected by at least one breakaway tab beneath a junction of two connectors;

B) rotating a second semi-cylindrical section of said guard to a position above said junction; and

C) engaging said first and said second semi-cylindrical sections.

12. The method of claim **11** wherein the act of rotating a second semi-cylindrical section includes rotation about the axis of a hinge shared by said first and said second semi-cylindrical sections.

13. The method of claim **11** wherein the act of engaging said first and second semi-cylindrical sections includes effectuating an irreversible engagement.

14. The method of claim **11** wherein the act of engaging said first and second semi-cylindrical sections includes engaging more than one locking mechanism.

15. The guard of claim **2** wherein said at least one tab is a breakaway tab.

* * * * *