DocuSign Envelope ID: 4F7E70A1-55B4-4954-8DE9-3E6A5AB17EA4

UNITED STATES PATENT AND TRADEMARK OFFICE

_____

BEFORE THE PATENT TRIAL AND APPEAL BOARD

_____

VOLTAGE, LLC

Petitioner,

v.

SHOALS TECHNOLOGIES GROUP, LLC

Patent Owner

_____

Inter Partes Review IPR2024-00876,

Declaration of Gary Joseph in Support of the

Petition for *Inter Partes* Review of U.S. Patent No. 10,992,254

DocuSign Envelope ID: 4F7E70A1-55B4-4954-8DE9-3E6A5AB17EA4

I, Gary Joseph, hereby declare and state as follows:

1. I am the Director of Sales and Business development at Voltage, LLC ("Voltage"). I have been employed by Voltage since approximately September 2020.
2. I submit this declaration in support of Voltage's Petition for *Inter Partes* Review of U.S. Patent No. 10,992,254. I have been asked to provide information regarding the brochure titled "Solar Line – Photovoltaic Interconnections System – Helios," by Amphenol Industrial Solar Technologies, ICS 18-6 with Release Date November 2012, attached hereto as Exhibit A ("Solar Line Brochure"). The Solar Line Brochure is a product catalog representing a broad array of products, including solar connectors, cables, cable assemblies, tools, accessories, and other parts for use in designing and assembling solar installations. I am familiar with the Solar Line Brochure, including facts relating to its availability to the public in the United States prior to 2014. This declaration is based on my personal knowledge and information.
3. Prior to joining Voltage, I was employed by Amphenol Industrial Operations (currently Amphenol Industrial Products Group) ("Amphenol") working in Amphenol's sales organization. From approximately June 2011 to December 2016, I was a Regional Sales Manager covering the western North America region. From approximately January 2017 to October 2019, I was the Director of Sales for the North America region. My responsibilities as Regional Sales Manager and Director of Sales included the sale and

DocuSign Envelope ID: 4F7E70A1-55B4-4954-8DE9-3E6A5AB17EA4

marketing of Amphenol's products in the United States and broader North America, including those listed in the Solar Line Brochure.

4. As a former member of Amphenol's sales organization covering North America, I have personal knowledge regarding business records related to photovoltaic interconnections products offered for sale by Amphenol in the United States. The products in the Solar Line Brochure were generally available for sale in the United States as of November 2012, the "Release Date" identified on the cover page of the Solar Line Brochure.
5. Over the course of my employment at Amphenol, Amphenol periodically updated the Solar Line Brochure with additional products and product details. By way of example, the Solar Line Brochure is marked "ICS-18-6" with a Release Date of November 2012. Attached as Exhibit B is an earlier version of the Solar Line Brochure, marked "ICS-18-2" with a Release Date of May 2011. Both brochures identify over-molded PV cable assemblies in the T-junction, X-junction, and R-junction configurations, which corroborates my recollection that Amphenol had offered for sale in the United States as of November 2012 those over-molded PV cable assemblies, as identified in the Solar Line Brochure.
6. From my experience working at Amphenol, when a product was listed in a catalogue like the Solar Line Brochure, it was Amphenol's intention to sell the product. To the best of my knowledge, the products listed in the Solar Line Brochure were offered for sale by the release date stated on the document, November 2012.

DocuSign Envelope ID: 4F7E70A1-55B4-4954-8DE9-3E6A5AB17EA4

7. I also have personal knowledge and specifically recall that the junction cable assemblies like the ones depicted in page 21 of the Solar Line Brochure had been released and offered for sale in the United States prior to 2014.
8. During my employment at Amphenol, it was Amphenol's regular practice to make at least the latest version of the Solar Line Brochure available for download on Amphenol's website. By way of example, the Solar Line Brochure (ICS-18-6) would have been publicly available for anyone visiting Amphenol's website to download around or after its Release Date of November 2012. Prior versions of the Solar Line Brochure, such as ICS-18-2 attached as Exhibit B, would have been available for download before then.
9. During my employment at Amphenol, it was also Amphenol's regular practice to make printed copies of a recent or current version of the Solar Line Brochure available for distribution to potential customers and at business development events in the United States, including trade shows, conferences, and meetings with potential and existing customers. Such events would have included, for example, the annual conference for Solar Power International (SPI), which was held in Dallas, TX in 2011, Orlando, FL in 2012, Chicago, IL in 2013 and Las Vegas, NV in 2014. Solar Line Photovoltaic Interconnection Systems described in the Solar Line Brochure were also advertised to potential customers. A customer or any other member of the public could also have obtained a copy of the Solar Line Brochure by calling Amphenol and requesting one, in addition to accessing a copy from Amphenol's website.

DocuSign Envelope ID: 4F7E70A1-55B4-4954-8DE9-3E6A5AB17EA4

10. For as long as I worked at Amphenol, Amphenol regularly maintained, in the course of its ordinary business, records of all versions of the Solar Line Brochure accompanying its Solar Line Photovoltaic Interconnection Systems. I recognize the Solar Line Brochure as a true and accurate copy of the Solar Line Brochure that would have been publicly available around or after its stated Release Date of November 2012. In preparing this declaration, I also located an electronic copy of the ICS-18-2 version of the Solar Line Brochure with a Release Date of May 2011 in my personal records, which I referenced to corroborate my belief that that the Solar Line Brochure (ICS-18-6) is a true and current copy of the version Amphenol released to the public around or after the Release Date of November 2012.

11. To the best of my recollection, once released, the Solar Line Brochure was not treated as confidential.

12. I declare under penalty of perjury that to the best of my knowledge, information, and belief, the foregoing statements are true and correct.

Date: May 7, 2024

DocuSigned by:
Gary Joseph
30F153512EFA454...

Gary Joseph

EXHIBIT A

www.amphenol-industrial.com

Solar Line

PHOTOVOLTAIC INTERCONNECTION SYSTEM

HELIOS

AMPHENOL INDUSTRIAL SOLAR TECHNOLOGIES

ICS 18-6 Release date: November. 2012

NORTH AMERICA:

Amphenol INDUSTRIAL OPERATIONS
40-60 Delaware Street
Sidney, New York 13838-1395 - USA
Telephone: 1-607-563-5011 • Fax: 1-607-563-5157

Amphenol INDUSTRIAL OPERATIONS
Amphenol POWER SOLUTIONS
34190 Riviera Drive
Fraser, MI 48026 - USA
Telephone: 1-586-294-7400 • Fax: 1-586-294-7402
www.radsok.com

Amphenol TECHNICAL PRODUCTS INTERNATIONAL CO.
2110 Notre Dame Avenue
Winnipeg, MB Canada R3H 0K1
Telephone: 1-204-697-2222 • Fax: 1-204-694-6164
www.tpii.com

Amphenol STEWARD CABLE, INC.
1921 Alta Vista - Midland, Texas 79706 - USA
P.O. Box 11270 - Midland, Texas 79702 - USA
Telephone: 1-432-687-2553 • Fax: 1-432-687-2278
www.stewardcable.com

EUROPE & MIDDLE EAST

Amphenol INDUSTRIAL OPERATIONS EUROPE
Via Barbaiana n. 5 - 20020 Lainate - Milano - Italy
Telephone: 39-02-932-541 • Fax: 39-02-9325-4444

Amphenol SOCAPEX
948 Promenade de l - Arve - Bp29 - 74311 Thyez - France
Telephone: 33-4 50 89 28 00 • Fax: 33-4 50 6 29 75

Amphenol TUCHEL ELECTRONICS GMBH
August - Haeusser Strasse 10
74080 Heilbronn, Germany
Telephone: +49 7131 929 0 • Fax: +49 7131 929 486
www. Amphenol.de

Amphenol INDUSTRIAL OPERATIONS MIDDLE EAST
Office No C-37, Ajman Free Zone- UAE
Tel: +9716-7422494 • Fax: +9716-7422941

ASIA:

Amphenol Industrial Solar Technologies(AIST)
Block 5, Fu An 2nd Industrial Park,
Dayang Road, Fuyong, Shenzhen,China 518103
Telephone: 0755-2991-8389 • Fax: 0755-2991-8310
www.amphenol-industrial.com.cn

Amphenol TECHNOLOGY (ZHUHAI) CO.,LTD.
No.63 Xinghan Rd Sanzao Town, Jinwan, Zhuhai,
China 519040
Telephone: (0756) 3989798 • Fax: (0756) 3989768

Amphenol SINCERE FLEX CIRCUITS CO. LTD
No.A, WanAn Industrial Park
LanHe Town, Panyu District, Guangzhou - China 511480
Telephone: 020-3483-9801 • Fax: 020-3483-9800
www.amphenol-gasf.com

Amphenol JAPAN MIL/AERO INDUSTRIAL
689-1, Iseochi, Ritto-shi Shiga 520-3044 - Japan
Telephone: 81-77-553-8501 • Fax: 81-77-551-2200

Amphenol Australia Pty Ltd
2 Fiveways Blvd. Keysborough, Victoria, 3173 Australia
Tel: +61 3 8796 8888 · Fax: +61 3 8796 8801
E-mail info@amphenol.com.au
Web: www.amphenol.com.au

Voltage, LLC
EX1010-7

Expanding Global Presence

Amphenol Corporation is one of the world`s largest interconnect manufacturers. Founded in 1932,Amphenol designs,manufactures, and markets electrical, electronic, and fiber optic connectors,interconnect systems, and coaxial and specialty cables.

Amphenol products are engineered and manufactured in the Americas, Europe, Asia, and Africa and sold by a worldwide sales and marketing organization. Amphenol has a diversified presence as a leader in high growth areas of the interconnect industry and provides solutions for customers in the automotive, broadband, industrial, information technology and data communications, military andaerospace, mobile devices, and mobile networks markets.

Photon
The Photovoltaic Magazine **International**

Amphenol Industrial Operations:
Helios H4,H4CFC4D/H4CMC4D

good

9/2011&9/2012

www.photon.info

Amphenol`s Helios H4 is the #1 Ranked Solar Connector in the World

Beating out 26 worldwide competing connectors, Amphenol`s Helios H4 Solar conneCtors achieved the top two ranked positions in an independent annual test comparison of solar connectors performed by Photon lab. The test results were published in ***Photon-The Solar Power Magazine(September,2011).***

○ = MANUFACTURING OPERATIONS △ = SALES OFFICES ☆ = HEADQUARTERS

AMERICAS
UNITED STATES
CANADA
MEXICO
BRAZIL
ARGENTINA

EUROPE
FRANCE
GERMANY
UNITED KINGDOM
IRELAND
THE NETHERLANDS
CZECH REPUBLIC
ESTONIA
SLOVAKIA
SWEDEN
RUSSIA
TURKEY
FINLAND
ITALY
SPAIN
AUSTRIA

MIDDLE EAST & AFRICA
TUNISIA
SOUTH AFRICA
UNITED ARAB EMIRATES
ISRAEL

ASIA & PACIFIC
CHINA
HONG KONG
INDIA
JAPAN
KOREA
MALAYSIA
TAIWAN
AUSTRALIA
SINGAPORE
VIETNAM

Amphenol®
HELIOS
Amphenol Industrial Solar Technologies

Page No		Table Of Contents
Page 1-6		Helios H4 connector
Page 7-16		Junction boxes
Page 17-22		Cable and cable assembly
Page 23-26		Tool and accessary
Page 27-28		Part

Voltage, LLC
EX1010-8

H4 PV cable connector

H4 Female PV cable connector

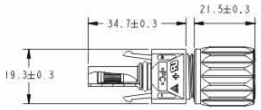

H4 Female socket contact

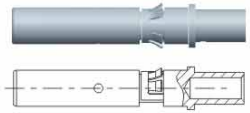

H4 Male PV cable connector

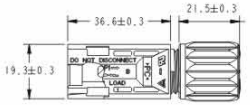

H4 Male pin contact

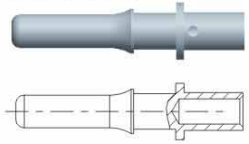

How to order

Product Family	Product	Gender	Connector type	Cable size	Approvals	Connector packaging
H4 Helios H4	C Connector	F Female +	C Cable gland	2 2.5 mm²/AWG14	D Dual	I 1pcs/bag, 800pcs/box
		M Male -		4 4 mm²/AWG12		C 100pcs/bag, 10bags/box
				6 6 mm²/AWG10		M 500 pcs/ bag, 2bags/box
				8 10 mm²/AWG8		

Technical Data

Rated current	32A(2.5mm²,14AWG),40A(4.0mm²,12AWG), 44A(6.0mm²,10AWG), 65A(10.0mm², 8AWG)
Rated voltage	1000V (IEC/TUV/UL)
Test voltage	6KV for 1 minute, 8KV impulse (1.2/50 μs)(IEC)
Typical contact resistance	0.30mΩ for S&F contact, 0.25mΩ for machined contact
Contact material	Copper, tin plated
Contact system	Cold formed / stamp formed contact with RADSOK® insert
Insulation material	PC
Locking mechanism	Snap-lock, special unlocking tool required to un-mate as required by NEC2011
Cable strain relief	Compression gland with ratcheting gland nut
Degree of protection	IP68
Safety class	II
Pollution degree	2
Overvoltage category	III
Flame class	UL94 V-0
Ambient temperature range	-40°C--- +85°C

Amphenol®
HELIOS
Amphenol Industrial Solar Technologies

H4 Stamped and formed contact

Packaged on a reel for automatic assembly

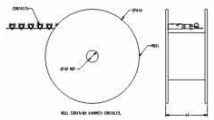

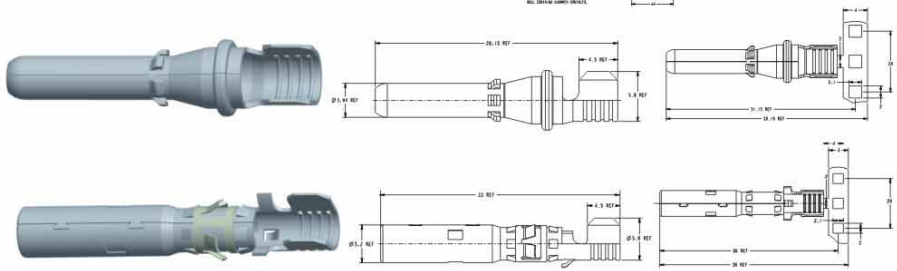

H4 connector with S&F contact logic code

Product Family	Product	Gender	Connector type	Cable size	Approvals	Connector packaging	Contact
H4 Helios H4	C Connector	F Female +	C Cable gland	2 2.5 mm²/AWG14	D DUAL	I 1pcs/bag, 800pcs/box	S S&F contact
		M Male -		4 4 mm²/12AWG &6mm²/10AWG		C 100pcs/bag, 10bags/box	
				0 Less contacts		M 500 pcs/ bag, 2bags/box	

H4 Stamp and formed contact ordering logic

Product line	Contact type	Gender	Cable size	Packing
H4 Helios H4	F S&F contact	F Female	2 1.5mm²/16AWG &2.5mm²/14AWG	R 2000/reel
		M Male	4 4.0mm²/12AWG & 6.0mm²/10AWG	

Note: If ordering contacts in 2000pcs/reel version, need to order contacts and plastic housing seperately. Contacts is as this table,plastic house should choose as H4CFC0DM for female housing and H4CMC0DM for male housing. If choose contact picked off fromreel, just choose as H4CFC4DMS for female connector with S&F contacts, 1000pcs/box pack.

Assembly Tool

Tool-kit H4TK0000 | Unlock tool H4TU0000 | Wrench tool H4TW0001 | Strip tool H4TS0000 | Crimp tool H4TC0000

Voltage, LLC
EX1010-9

H4 PV panel connector

H4 Female PV panel connector

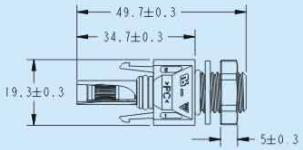

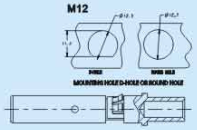

H4 Male PV panel connector

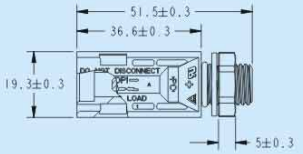

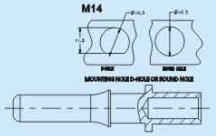

How to order

Product line	Product	Gender	Connector type	Cable size	Approvals	Connector packaging
H4 Helios H4	C Connector	F Female - M Male +	M bulkhead M12 N bulkhead M14	2 2.5 mm²/AWG14 4 4 mm²/AWG12 6 6 mm²/AWG10 8 10mm²/AWG8	D DUAL	I SINGLE C 1000 PCS /BOX AND 100 PCS BAGS M 1000 PCS /BOX AND 500 PCS/ BAGS

Technical Data

Rated current	32A(2.5mm²,14AWG),40A(4.0mm²,12AWG), 44A(6.0mm²,10AWG), 65A(10.0mm², 8AWG)
Rated voltage	1000V (IEC/TUV/UL)
Test voltage	6KV for 1 minute, 8KV impulse (1.2/50 μ S)(IEC)
Typical contact resistance	0.30mΩ for S&F contact, 0.25mΩ for machined contact
Contact material	Copper, tin plated
Contact system	Machined/cold formed or S&F contact with RADSOK® insert
Insulation material	PC
Locking mechanism	Snap-lock, special unlocking tool required to un-mate as required by NEC2008
Cable strain relief	Compression gland with ratcheting gland nut
Degree of protection	IP68 (1 meter, 1 hour) mated
Safety class	II
Pollution degree	2
Overvoltage category	III
Flame class	UL94 V-0
Ambient temperature range	-40°C--- +85°C

Ordering example:

▪ H4 PV connector	H4 C	▪ 6.0mm²/10AWG cable size	6
▪ Female part	F	▪ Dual approvals	D
▪ M12 panel connector	M	▪ 1000pcs per package	M

Amphenol®
HELIOS
Amphenol Industrial Solar Technologies

H4 Stamped and formed contact

Packaged on a reel for automatic assembly

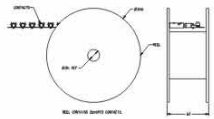

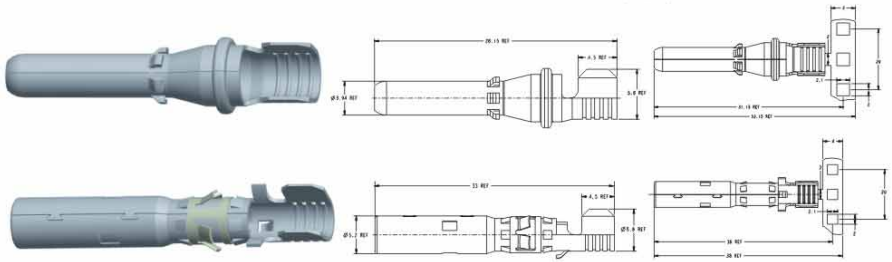

H4 connector with S&F contact logic code

Product Family	Product	Gender	Connector type	Cable size	Approvals	Connector packaging	Contact
H4 Helios H4	C Connector	F Female + M Male -	M Bulkhead M12 N Bulkhead M14	2 2.5 mm²/AWG12 4 Cable gauge:4 mm²/12AWG &6mm²/10AWG 0 Less contacts	D Dual	I 1pcs/bag, 800pcs/box C 100pcs/bag, 10bags/box M 500pcs/bag, 2 bags/box	S S&F contact

H4 Stamp and formed contact ordering logic

Product lin	Contact type	Gender	Cable size	Packing
H4 Helios H4	F S&F contact	F Female M Male	2 1.5mm²/16AWG &2.5mm²/14AWG 4 4.0mm²/12AWG & 6.0mm²/10AWG	R 2000pcs/reel

Note: If ordering contacts in 2000pcs/reel version, need to order contacts and plastic housing seperately. Contacts is as this table, plastic house should choose as H4CFC0DM for female housing and H4CMC0DM for male housing. If choose contact picked off from reel, just choose as H4CFC4DMS for female connector with S&F contacts, 1000pcs/box pack.

Assembly Tool

▪ Tool-kit H4TK0000 ▪ Unlock tool H4TU0000 ▪ Wrench tool H4TW0001 ▪ Strip tool H4TS0000 ▪ Crimp tool H4TC0000

Voltage, LLC
EX1010-10

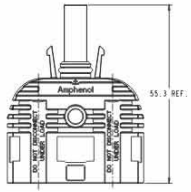

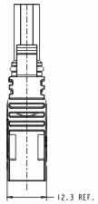

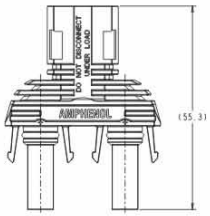

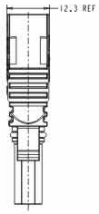

How to order		
Product line	Product type	Gender
H4 Helios H4	Y Branch connector	X FFM (branch 2 female/1 male) Y MMF (branch 2 male/1 female)

Cable Assy and Diversity Junctions

T Junction

Y Junction

R Junction

X Junction

Technical Information

Ambient Temperature Rating : -40℃---+70℃
Cable Range (Cable Version): 14AWG（2.5mm²) To 8AWG (10mm²)
Degree of protection :IP68

Amphenol®
HELIOS
Amphenol Industrial Solar Technologies

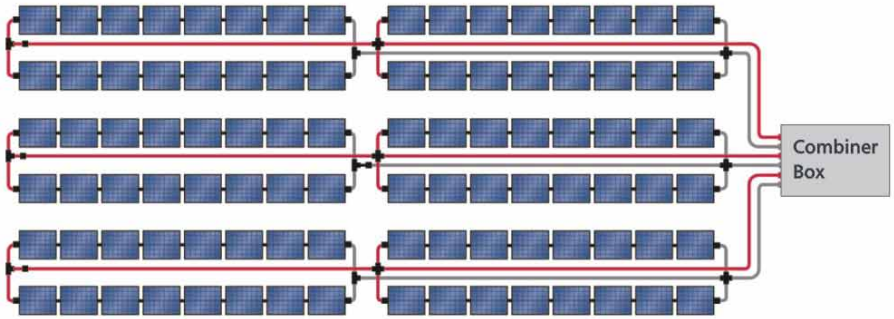

Features:

- Hermetically sealed design; no moisture ingress, no condensation
- Patented, finger-type heat exchanger protects diodes from thermal destruction, even under adverse conditions

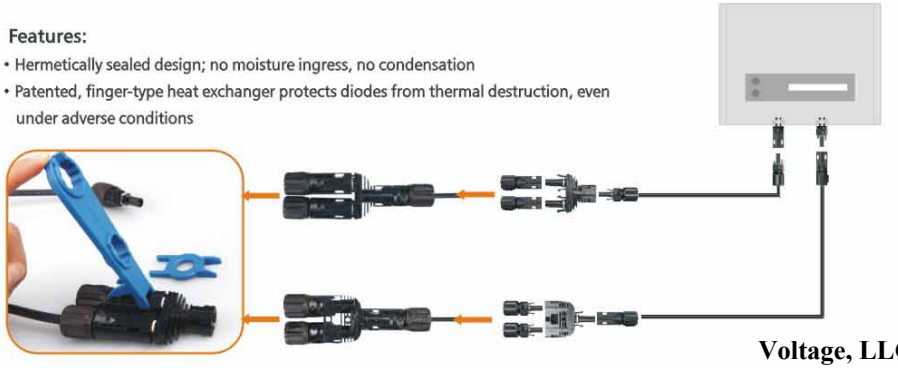

Voltage, LLC
EX1010-11

Hercules™ PV Junction Box

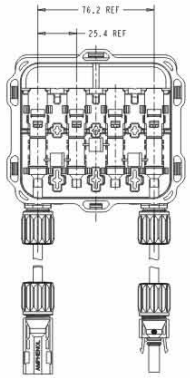

Features:

Same dimensions, multi variations
IP67 rated
Breathing film for air exchange

R 60200258 E346053

Technical data

Rated voltage	UL 600V /1000V DC IEC/TÜV: 1000V DC
Rated current	Up to 30A
Terminal quantity	3 rails or 4rails
Diode quantity option	2, 3 , 4 ,6
Ribbon connection	Clamping, Soldering or Spot welding
Breathing film	With or Without
Degree of protection	IP67
Cable size	12AWG/4.0mm² or 10AWG/6.0mm²
Size	117x107x22mm
Flame class	UL94 V-0; 5VA
Connector type	Helios H4
Temperature range	-40°C to +90°C

Amphenol®
HELIOS
Amphenol Industrial Solar Technologies

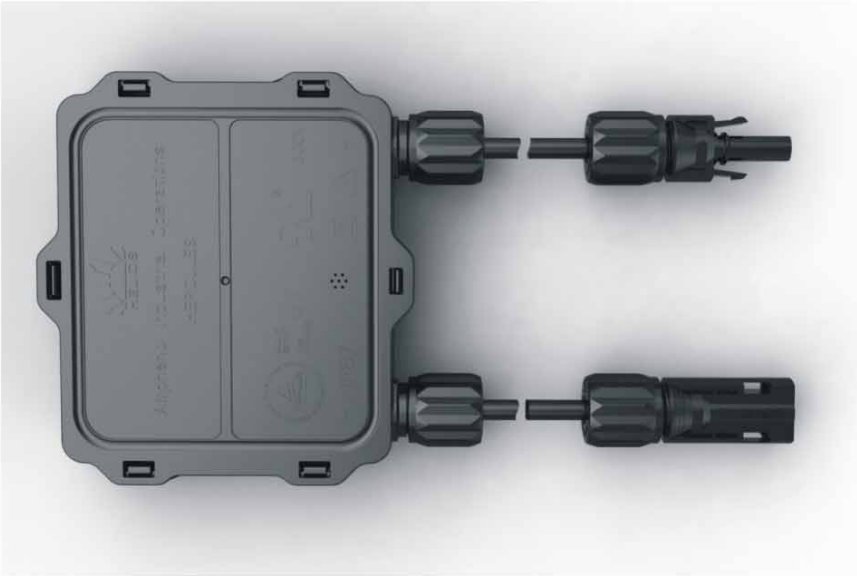

How to order

Product line	Product type	Terminals and Diodes	Terminal style	Diode rating
HB Helios JB	H Hercules Junction box	A 4 contacts/3 diodes B 3 contacts(2 left/1 right)/2 diodes C 3 contacts(1 left/2 right)/2 diodes D 4 contacts/6 diodes E 3 contacts(2 left/1 right)/4 diodes F 3 contacts(1 left/2 right)/4 diodes	A Clamp contacts B Solder contacts C Solder contacts left&right opening D Solder contacts left opening E Solder contacts right opening F Spot weld contacts	A 12A 200V B 12A 40V C 15A 40V D 30A 40V E 20A 40V F 15A 45V

Sealing type	Breathing hole	Cable size	Adhesive	Cable length (Ln)*	Cable length (Lp)*	Variations
A Potting B O-ring	Y Yes N No	A 6.0 mm²/10AWG B 4.0mm²/12AWG	Y Yes N No	A 1000mm B 900mm	A 1000mm B 900mm	H Upgrated to UL 1000V

* Ln:cable length on negative end; Lp:cable length on positive end
- Please contact us for additional variations

Ordering example:

- HelioLink PV junction box HB H
- 4 contacts/3 diodes A
- Soldering connection B
- Diode rated 15A/40V C
- Potting seal A
- With breathing hole Y
- 6.0mm²/10AWG cable size A
- Without adhesive tape N
- 1000mm cable length from both negative and positive end AA

Voltage, LLC
EX1010-12

Thin-film PV junction box

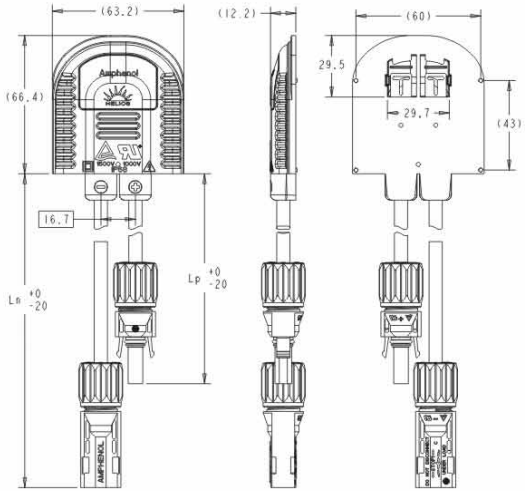

Features:

Low profile
Over-molded design for better sealing
SMD for efficient heat dissipation

R50220259 E346053

Technical Data	
Rated voltage	1500V DC（TUV）, 1000V(UL)
Rated current	Up to 20A
Termination type	Soldering
Protection degree	IP 67
Operation temperature	-40° C---+90° C
Sealing type	Potting
Flame class	UL94 5V
Diode quantity option	None/ 1

Amphenol®
HELIOS
Amphenol Industrial Solar Technologies

Thin-film PV junction box

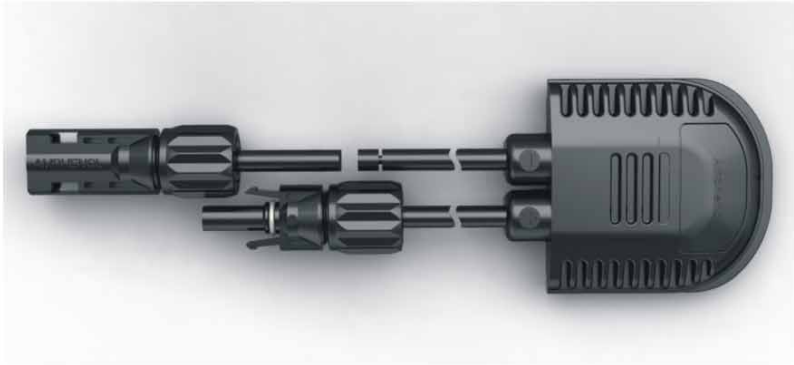

Product line	Product type	Terminals and Diodes	Terminal style	Diode rating
HB Helios JB	T Thin flim junction box	G 2 contacts/1 diode	B Solder contacts	G 5A 1000V H 10A 1000V J 8A 1000V K 15A 1000V P 20A 100V Q 20A 45V N N/A

Sealing type	Breath Hole	Cable size	Adhesive	Cable length (Ln)*	Cable length (Lp)*
A Potting	Y N	B 4.0 mm²/12AWG C 2.5mm²/14AWG	Y Yes N No	A 1000mm B 900mm	A 1000mm B 900mm

* Ln:cable length on negative end; Lp:cable length on positive end
- Please contact us for additional variations

Ordering example:

■ Thin-film PV junction box	HB T	■ Potting seal	A
■ 2 contacts/1 diode	G	■ 2.5mm²/14AWG cable size	C
■ Soldering connection	B	■ Without a dhesive tape	N
■ Diode rated 20A/45V	Q	■ 1000mm cable length from both negative and positive end	AA

Voltage, LLC
EX1010-13

Tigo-Amphenol Optimizer

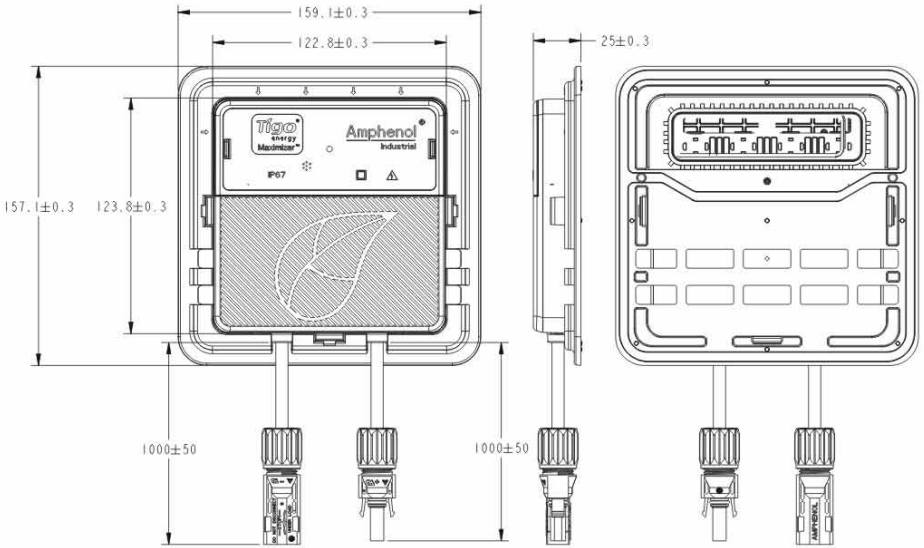

Amphenol®
HELIOS
Amphenol Industrial Solar Technologies

Technical data		
Input data	**MMJ-ES50**	**Diode rating**
Maximum power	300W	350W
Maximum input DC voltage (Voc)	52V	75V
Vmp range *	16-48V	30-65V
Maximum continuous current (Imp)	9.5A	6.5A
Maximum input current (Isc)	10A	7.5A
Output Data (DC)	300W	350W
Maximum output power		
Maximum continuous current	9.5A	6.5A
Nominal Voltage/range	variable	variable
Mechanical Data		
Operating temperature range	-30° C---70° C	
Cooling	Natural Convection	

Sealing type	Product	Technical specification	Cable length"+"	Cable length"-"
HB Helios JB	F Tigo Removable junction box	5 MMJ-ES50 7 MMJ-ES75	A 1000mm B 900mm	A 1000mm B 900mm

For residential, commercial and utility scale photovoltaic solar arrays, the Optimizer™ system optimizes the power output of each module (solar panel); delivers module level data for operational management and performance monitoring; and provides the ability to deactivate the high voltage DC bus for safer installation, maintenance or fire fighting. Optimizers are key components of the system as an integrated part of modules provided by leading solar module OEMs. The Module Optimizer provides data acquisition, communication to the Optimizer™ Management Unit, and energy harvesting control. The very small electronics footprint has been designed to minimize cost and maximize reliability. Solar modules with an integrated Energy Optimizer MMJ-ES are ideal for new installations worldwide.

The Optimizer output optimization starts with dynamic module balancing – a Module Optimizer (patented) integrated within each module manages the energy harvest and send information to the Optimizer Management Unit for reporting and control. Modules with the integrated Optimizer are connected in a normal series topology.

MMJ-ES maintains best-in-class system conversion efficiencies at statistically 99.5%. The Optimizer includes a unique technology which greatly enhances the safety of a PV solar installation. As part of the Optimizer system, this function can be activated with a safety button or via a remote management console. The system can be installed, maintained or approached by fire personnel without the exposure to voltage levels typically in excess of 400 volts.

Voltage, LLC
EX1010-14

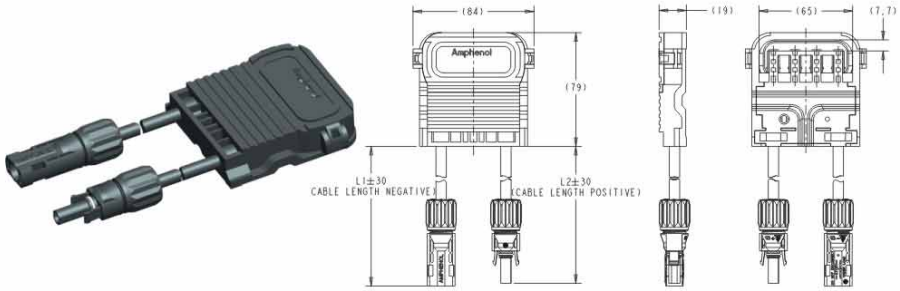

Product family	Product	Terminals and dindes	Terminal style	Diode rated current	Sealing type
HB Helios JB	C Hercules 2 Junction box	A 4 contacts/3 diodes	A Clamping contacts	Y YJ 20A45V M 25A45V HY D^2PAK	A Potting

Breathing hole	Cable size	Adhesive	Cable length positive	Cable length negative
N No	A 4 mm^2/AWG12	N No	A 1000MM B 900MM	A 1000MM B 900MM

Amphenol Hercules II Junction box

Amphenol Hercules II Junction box	Specification
Rated voltage	TUV 1500V UL 1000V
Rated current	Up to 10A
Contact resistance	15mΩ max
Nunmber of terminals	4
Sealing type for ribbon connection	O-ring
Diode quantity	3diode
Option of ribbon connection	Soldering, Spot welding, Clamping
Box size (LxWxT)	76*84*18.5 mm
IP degree	IP68
Inflammability	UL94 V-0, 5VA, Safety class II
TUV certification No.	In process
UL certification Number	In process

Amphenol®
HELIOS
Amphenol Industrial Solar Technologies

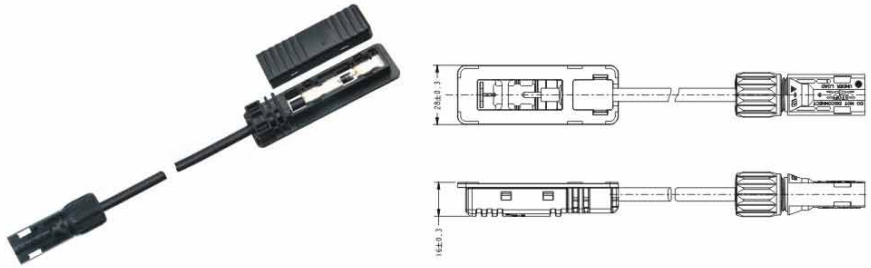

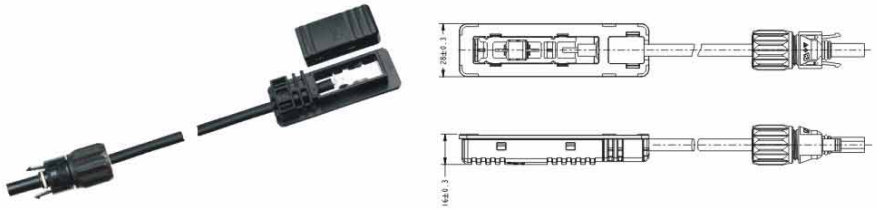

Double pole J-Box

Rated voltage	TUV 1000V UL 1000V
Rated current	12A
Contact resistance	1.0mΩ Max
Sealing type for ribbon connection	Potting
Option of diode type	Spot welding
Degree of protection	IP68
Inflammability	UL94 V-0, 5VA Safety Class II

Voltage, LLC
EX1010-15

ModLink Junction Box

Features:

- Modular concept; only add what you need, when you need it
- "Future proof": Ready to accept future smart modules
- Base unit is a complete junction box
- Base unit thermally separated from panel
- Uses industry standard connections
- Plug-and-play; no additional components needed
- No wasted materials when upgrading
- Smart module snaps into base; no drilling, no additional cabling.
- Cost effective on every level: For panel OEM, distributor, installer, Owner/operator
- Can be upgraded at any time

Helios ModLink Modular Junction Box

The ModLink Modular Junction Box provides PV panel manufacturers an advanced junction box that enables cutting edge smart technology at no additional cost . Built-in industry standard connectors mate directly to Amphenol Industrial Helios H4 connectors or to a wide range of " Smart" modules. These include DC/DC converters/optimizers, performance monitoring and DC/AC microinverters.

The ModLink Junction Box consists of a base unit that is firmly attached to the back sheet of the panel. The base unit already contains protective diodes and built-in connectors; ready to be used as a basic junction box from the start. When it' s time to upgrade just disconnect the connectors, snap-in the smart module, reconnect the connectors and you' re done.

This modular technology provides instant plug-and-play versatility. Smart modules can be added (or removed) at any time without any additional materials needed or wasted.

The base module retains the basic junction box functionality and protection, no matter if there are smart modules attached or not. This allows for exchange or removal of smart modules if repairs or upgrades are needed, without losing the basic function of the PV module.

There is no longer a need for "pigtails" attached to the photovoltaic module, making manufacturing and handling easier.

The Helios ModLink Modular Junction Box is just one of the many solar solutions Amphenol Industrial has to offer.

Amphenol®
HELIOS
Amphenol Industrial Solar Technologies

Technical Data

Terminals	4
Termination	Spot Weld
Termination seal	Potting or Lipseal(optional)
Bypass diodes	3 low Vf Schottky
Rated current	15A
Rated voltage	UL:600V IEC:1000V
DC output connection	Built-in Helios H4 Solar Connectors
Operating temperature	-40℃-90℃
Protection degree	IP67
Attachment to backsheet	PSA foam tape or RTV silicon adhesive
Enclosure material	PPE

Ordering logic code:

	Product family	Product	Diode rated current	PCB
Modlink	HB Helios JB	0 ModLink Junction box	A FFM (branch 2 female/1 male) B MMF (branch 2 male/1 female)	A V40-X B V50-X C V100-X

For ampt Optimizer Smart Module (DC/DC Converter) please refer to IDS-5

Base Unit Dimensions

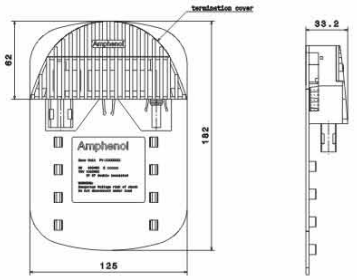

Module Installation

Installed Module Dimensions

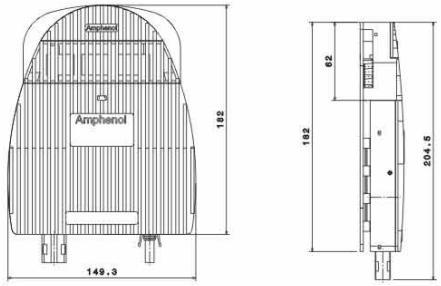

Module Installed

Voltage, LLC
EX1010-16

PowerLink solar cable

Halogen free photovoltaic cables are used as the interconnection wiring for photovoltaic power systems.

Features:

Flexibility at low temperature
Thermoset-insulated conductor
Thermoplastic jacket
Long-term insulation resistance to moisture
Range from 1.5mm² to 25mm²

Certificate:

TÜV and UL certified according to the latest regulations

Structure:

Conductor: Stranded bare or tinned copper
Insulation: XLPE material (white and black)
Jacket: XLPE material (Black, Red and Blue)

Temperature range:
-40 °C to +125°C
Environmental influence resistance:
Acid, alkalinity, UV, ozone and hydrolysis-resistant.

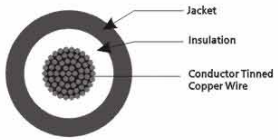

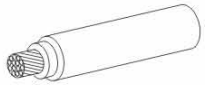

ArmorLink Solar Cable

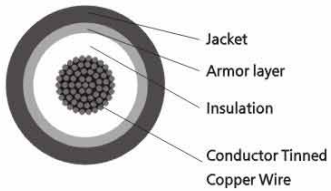

Advantages:

- Rodent resistant
- Extra protection layer

In process in process Made using UL4703 and 2Pfg 1169 as guidelines.
TÜV

Amphenol®
HELIOS
Amphenol Industrial Solar Technologies

PowerLink solar cable application:

Used in heavy-duty and harsh environment interconnection wiring, can be easily combined with our Helios H4 PV connectorand junction box series for photovoltaic system applications.

Cold
Snow
Low temperature

Sun
Drought
High tmeperature

Rain
Moisture

How to order

Product line	Product	Cable color	Cable type	Cable size	Approvals
HC Helios calbe	P PowerLink-Standard	B Black - Standard	L VDE 0295 - CLASS 2 7 STRANDS (USE -2)	1 1.5 mm²/16AWG	T TUV
	A ArmorLink-Rodent Proof	R Red	M MULTI WIRE 19 STRANDS (UL only)	2 2.5 mm²/14AWG	U UL
	U PowerLink-USE-2	L Blue	H VDE 0295 - CLASS 5 (UL, TUV and Dual)	4 4 mm²/12AWG	U1 UL 1000V
		G Grey O Brown		5 25mm²/3AWG 6 6 mm²/10AWG 8 10mm²/8AWG 9 16mm²/4AWG	D Dual 600V D1 Dual 1000V N None

Notes:

UL cable comes in AWG only
TUV cable comes in mm² only
Dual cable comes marked with AWG and mm²

VDE 2095-CLASS 2 is 7 strands cable
Multi wire stranding is 19 strands cable
VDE 2095-CLASS 5 is high stranded cable with extra flexibility

Voltage, LLC
EX1010-17

Inline and Over-molded Diode and Fuse

Inline diode connector | Over-molded inline diode cable assembly | Inline fuse connector | Over-molded inline fuse cable assembly

- Protection degree:IP68
  Cable range:2.5mm²/14AWG -10.0mm²/8AWG
  Temperature range: -40 °C - +90 °C
  Withstand rating:10kA
  Voltage rating:1500V max
  Amperage rating:30A max
  Connector options: M-M,M-F,F-F

- Protection degree:IP68
  Cable range:2.5mm²/14AWG -10.0mm²/8AWG
  Temperature range: -40 °C - +90 °C
  Surge rating:600V max
  Blocking voltage: customer specified

How to order

Product line	Product type	Connector type	Volatage	Current rating
H4 Helios H4	F Molded fuse D Molded diode	FM Female.male MM Male/male FF Female/female	1 600V 2 1000V	01 1A 02 2A 03 3A * up to10A

Amphenol®
HELIOS
Amphenol Industrial Solar Technologies

PV cable assemblies

How to order

Product family	Product	Gender	Connector type	Cable size	Approvals
H4 Helios H4	C Connector	F female+ M male- P Mated pair	C Cable gland M Panel M12 N Panel M14 O Over-mold	2 2.5 mm²/AWG14 4 4 mm²/AWG12 6 6 mm²/AWG10 8 10mm²/AWG8	T TUV U UL 600V U1 UL 1000V D DUAL 600V (UL)

Cable length(mm)	Cable color	Cable length(mm)	Variations
	B Black - standard R Red L Blue G Grey O Brown	PS Pre-stripped wire R Ring terminal IR Isolated ring terminal T Tube terminal IT Isolated tube terminal	

Examples of cable assemblies and definition of cable length:

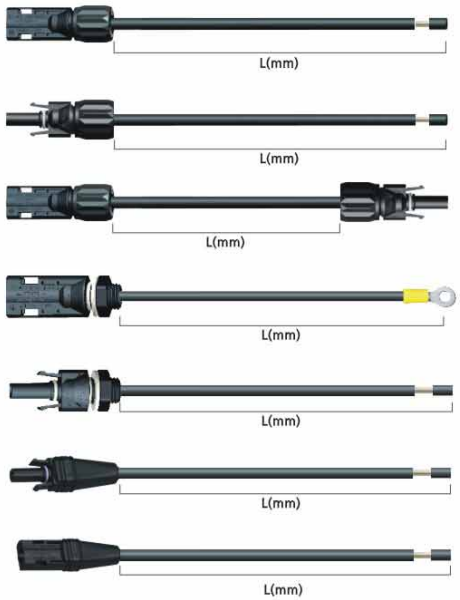

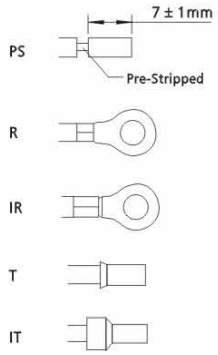

* Other terminals and customized strip length are available.

Voltage, LLC
EX1010-18

T/X-Junction cable assembly ordering configuration

Cable properties:
Voltage:
☐600V ☐ DC1000V ☐DC2000V DC

Main cable size:
☐8AWG(10.0mm²)
☐10AWG(6.0mm²)
☐12AWG(4.0mm²)
☐14AWG(2.5mm²)

Main cable approval:
☐UL ☐TUV ☐Dual

Branch cable size:
☐8AWG(10.0mm²)
☐10AWG(6.0mm²)
☐12AWG(4.0mm²)
☐14AWG(2.5mm²)

Branch cable approval:
☐UL ☐TUV ☐Dual
Length of main cable (cm):
A1 _____
A2 _____
...
AN _____
Length of branch cable:
B1(Beginning of main cable)_____
...
BN(End of branch cable) _____
Terminations:
A1(Beginning of main cable)_____
AN (End of main cable) _____
B1 (Beginning of branch cable) _____
BN (End of branch cable) _____

H4F, H4M, H4OF, H4OM,
*H4F: H4 standard cable connector female part
H4M: H4 standard cable connector male part
H4OF: H4 overmolded connector female part
H4OM: H4 overmolded connector male par

Fuses:
Location of fuse _____
Rating of fuse_____A_____V
Labels:
Label location _____
Label Text _____

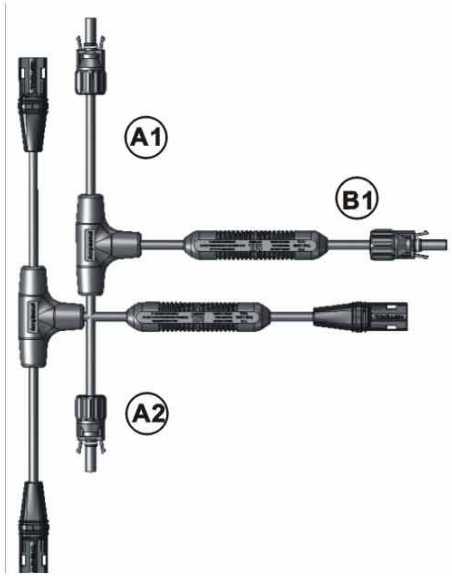

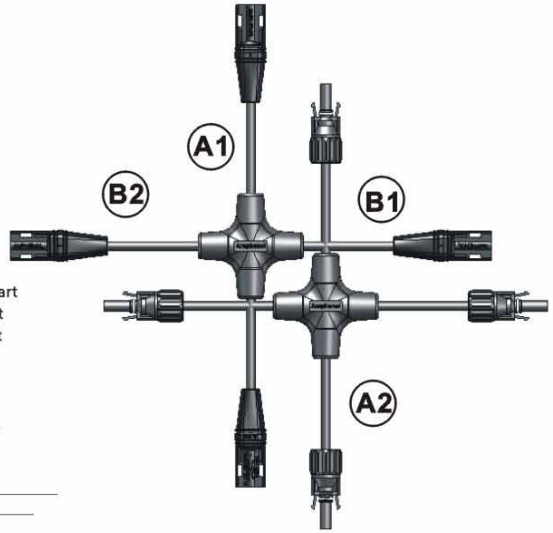

Amphenol®
HELIOS
Amphenol Industrial Solar Technologies

R-Junction cable assembly ordering configuration

Cable properties:
Voltage:
☐600V ☐DC1000V ☐DC2000V DC

Main cable size:
☐8AWG(10.0mm²)
☐10AWG(6.0mm²)
☐12AWG(4.0mm²)
☐14AWG(2.5mm²)

Main cable approval:
☐UL ☐TUV ☐Dual

Branch cable size:
☐8AWG(10.0mm²)
☐10AWG(6.0mm²)
☐12AWG(4.0mm²)
☐14AWG(2.5mm²)

Branch cable approval:
☐UL ☐TUV ☐ Dual
Length of main cable (cm):
A1 _____
B1 _____
C1 _____
Terminations:
A1 _____
B1 _____
C1 _____

H4F, H4M, H4OF, H4OM,
*H4F: H4 standard cable connector female part
H4M: H4 standard cable connector male part
H4OF: H4 overmolded connector female part
H4OM: H4 overmolded connector male par

Fuses:
Location of fuse _____
Rating of fuse_____A_____V
Labels:
Label location _____
Label Text _____

Voltage, LLC
EX1010-19

Tool Kit. P/N: H4TK0000

Water proof with foam insert and assembly tool. The listed parts are included.

Crimp tool

Strip tool

Parts list

P/N	Description	Quantity
H4TTW100	Socket for cable gland	1
H4TM1200	Socket for bulkhead m12	1
H4TC0001	Crimper tool for machined contact	1
H4TU0000	Unlock tool	1
H4TS0000	Cable strip tool	1
H4TCT000	Cable cutter	1
H4TW0001	Wrench tool	2
PV-692208-000	S&F crimp tool die-set	1
PV-692209-001	S&F crimp tool locator	1
PV-090508-M25	2.5mm2 male contact	5
PV-090508-M04	4.0mm2 male contact	5
PV-090508-M06	6.0mm2 male contact	5
PV-090507-F03	2.5mm2 female contact	5
PV-090508-F03	4.0mm2 female contact	5
PV-090506-F03	6.0mm2 female contact	5

Amphenol®
HELIOS
Amphenol Industrial Solar Technologies

Crimp tool, P/N: H4TC0001 for machined contact, H4TC0002 for stamp & formed contact. Amphenol crimp tool is has the capability to crimp both machined contact and stamp&formed contact, the only difference is the insert die. If you need to crimp 2 kinds of contact when install connector, you could change the insert die and locator. The machined insert die could crimp 14-8awg contact, 10awg and 8awg share the same die position. The stamp&formed insert die could crimp 14awg-10awg contact.

Amphenol cable strip tool, P/N:H4TS0000.
Strip tool has a locator to set striped cable length, strip capacity from 14awg to 10awg.
Amphenol strip tool advantage: Save strip force; Will not cut sopper core; Consistent strip length.

Sealing cap for female connector.
P/N: H4PF

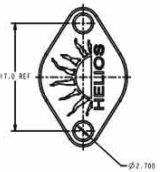

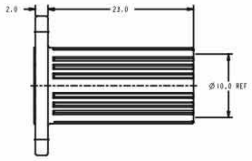

Sealing cap for female connector.
P/N: H4PM

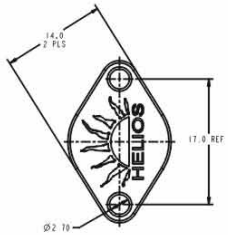

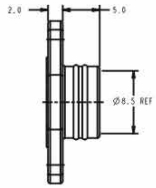

Cable connector wrench tool
P/N: H4TW0001

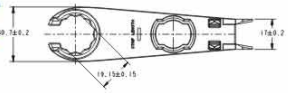

Unlock tool
P/N: H4TU0000

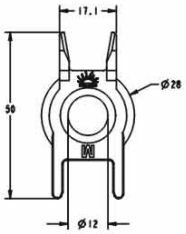

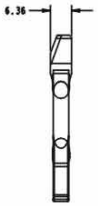

Amphenol®
HELIOS
Amphenol Industrial Solar Technologies

Hercules junction box open tool: HBHTS000

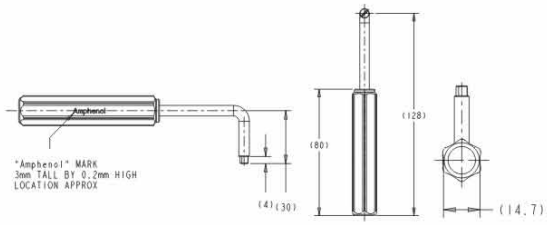

Torch wrench:P/N: H4TTW100

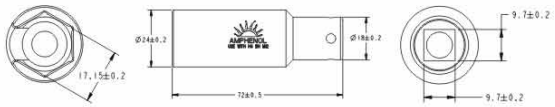

Connector hold tool:P/N: H4TH0000

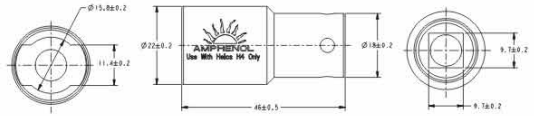

TBulkhead wrech tool:
P/N for M12:H4TM1200; P/N for M14:H4TM1400

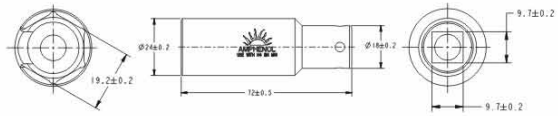

HelioLug

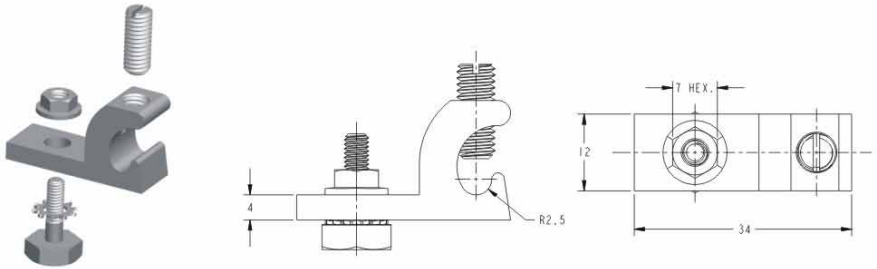

INSTALLATION INSTRUCTIONS:

• Place the lug to the designated module grounding hole with the star washer between the grounding lug and the module frame in order to break through the anodizing and establish electrical contact with the aluminum.Torque the bolt and nut to 30 in-lbs. NOTE: These instructions provide guidelines for general use. If available,the specific module manufacturer' s instructions for the location of the star washer are to be followed.

• For the attachment to the racking, slide the bolt into the mounting channel of the extrusion or into a " Hole drilled through the extrusion. Place the star washer between the racking and lug and secure the nut and bolt to 30 in-lbs. NOTE:

• Insert a 4 to 12 AWG copper wire into the lug and tighten the lug set screw to the copper wire to the torque based on the wire size. (4-6 AWG at 35 in-lbs and 8-12 AWG at 30 in-lbs). Do not exceed the maximum rated overcurrent protection, 20 A (12 AWG),40 A (10 AWG), 90 A (8 AWG), 150 A (6 AWG), and 200 A (4 AWG).

Certified for UL2703-PV Racking and Grounding

How to order

1	2	3	4
HG	L	U	I
Product line	**Product type**	**Approvals**	**Packaging**
HG Helios Grounding Products	L HelioLug (Wire Range 4-12 AWG)	U UL	I Individual M 1000pcs

Amphenol®
HELIOS
Amphenol Industrial Solar Technologies

Helio clip

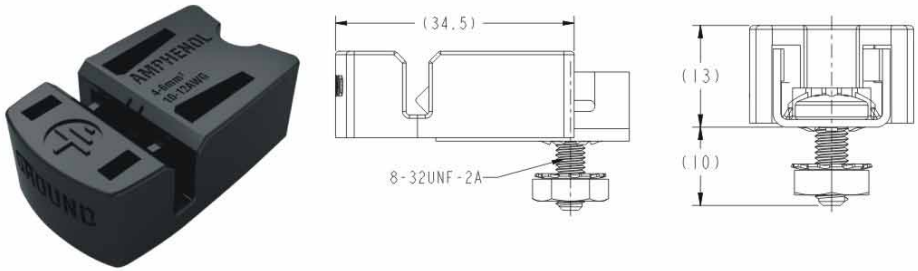

Desingned for UL2703-PV Racking and Grounding

How to order

Product Family	Product	Certification	Packaging
HG Helios Grounding	B Helios Grounding Clip Selftapping D Helios Grounding Clip Mounting	UL U IUV I DUAL D	I Individual packaging B Bulk packed

Helio bolt

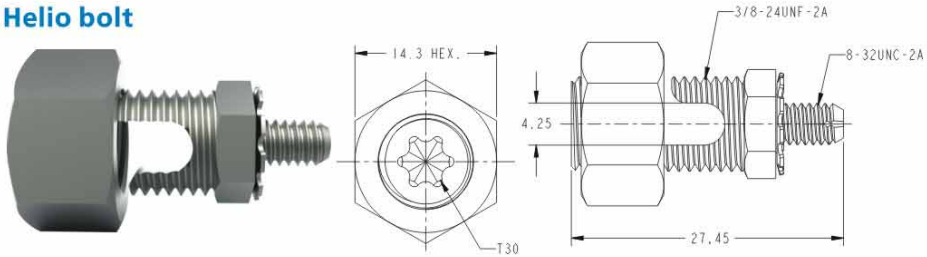

Desingned for UL2703-PV Racking and Grounding

How to order

Product Family	Product	Certification	Packaging
HG Helios Grounding	B HelioBolt Selftapping D HelioBolt Mounting	UL U IUV I DUAL D	I Individual packaging B Bulk packed

Voltage, LLC
EX1010-22

EXHIBIT B

www.amphenol-industrial.com

HELIOS

Amphenol®

Solar Line

ICS-18-2 Release date: May. 2011

NORTH AMERICA:

Amphenol INDUSTRIAL OPERATIONS
40-60 Delaware Street
Sidney, New York 13838-1395 - USA
Telephone: 1-607-563-5011 • Fax: 1-607-563-5157

Amphenol INDUSTRIAL OPERATIONS
Amphenol POWER SOLUTIONS
34190 Riviera Drive
Fraser, MI 48026 - USA
Telephone: 1-586-294-7400 • Fax: 1-586-294-7402
www.radsok.com

Amphenol TECHNICAL PRODUCTS INTERNATIONAL CO.
2110 Notre Dame Avenue
Winnipeg, MB Canada R3H 0K1
Telephone: 1-204-697-2222 • Fax: 1-204-694-6164
www.tpil.com

Amphenol STEWARD CABLE, INC.
1921 Alta Vista - Midland, Texas 79706 - USA
P.O. Box 11270 - Midland, Texas 79702 - USA
Telephone: 1-432-687-2553 • Fax: 1-432-687-2278
www.stewardcable.com

EUROPE & MIDDLE EAST

Amphenol INDUSTRIAL OPERATIONS EUROPE
Via Barbaiana n. 5 - 20020 Lainate - Milano - Italy
Telephone: 39-02-932-541 • Fax: 39-02-9325-4444

Amphenol SOCAPEX
948 Promenade de l - Arve - Bp29 - 74311 Thyez - France
Telephone: 33-4 50 89 28 00 • Fax: 33-4 50 6 29 75

Amphenol TUCHEL ELECTRONICS GMBH
August - Haeusser Strasse 10
74080 Heilbronn, Germany
Telephone: +49 7131 929 0 • Fax: +49 7131 929 486
www. Amphenol.de

Amphenol INDUSTRIAL OPERATIONS MIDDLE EAST
Office No C-37, Ajman Free Zone- UAE
Tel: +9716-7422494 • Fax: +9716-7422941

ASIA:

Amphenol TECHNOLOGY (SHENZHEN) CO., LTD
Block 5, Fu An 2nd Industrial Park,
Dayang Road, Fuyong, Shenzhen - China 518103
Telephone: 0755-2991-8389 • Fax: 0755-2991-8310
www.amphenol-industrial.com.cn

Amphenol TECHNOLOGY (ZHUHAI) CO.,LTD.
No.63 Xinghan Rd Sanzao Town, Jinwan, Zhuhai,
China 519040
Telephone: (0756) 3989798 • Fax: (0756) 3989768

Amphenol SINCERE FLEX CIRCUITS CO. LTD
No.A, WanAn Industrial Park
LanHe Town, Panyu District, Guangzhou - China 511480
Telephone: 020-3483-9801 • Fax: 020-3483-9800
www.amphenol-gasf.com

Amphenol JAPAN MIL/AERO INDUSTRIAL
689-1, Iseochi, Ritto-shi Shiga 520-3044 - Japan
Telephone: 81-77-553-8501 • Fax: 81-77-551-2200

Amphenol DAESHIN
558 Sosa SongNea Bucheon-city, Kyunggi-DO
Korea 420-130
Telephone: 82-32-610-3800
Fax: 82-32-673-2507/665-6219

Voltage, LLC
EX1010-24

Amphenol®

Manufacturing connectors since 1932, we take pride that Amphenol Industrial is the undisputed leader in interconnect systems for harsh environment applications. Such applications require a high degree of engineering sophistication and precision manufacturing capability. Innovations like our RADSOK® contact technology can provide roughly 50% more current through the same size pin. Connectors utilizing this RADSOK® technology will outperform similar products in the market hands down.

AIO Headoffice, Sidney, NY,USA

Amphenol Industrial Operations (AIO), division of Amphenol Corporation, is the leading manufacturer of cylindrical connectors in the world. Amphenol Industrial's product lines consist of rectangular, standard miniature, fiber optic, EMI/EMP filter, and a variety of special application connectors.

The Sidney, NY facility, nestled at the foothills of the Catskill Mountains, is over 675,000 square feet. This complex houses over 1,400 employees, incorporating state-of-the-art manufacturing technologies. The facility is both ISO9001 certified and qualified to MIL-STD-790 requirements.

Our manufacturing capabilities include state-of-the-art CNC machining, die-casting, molding, impact and extruding, plating, screw machining and process controls.

AIO also has a fully equipped material evaluation lab and an engineering support organization utilizing the latest in computer aided design software and analysis tools.

The Amphenol Industrial division is supported by two satellite plants and one of the largest distributor networks in the world.

www.amphenol-industrial.com

Amphenol®

www.amphenol-industrial.com

Table of Contents

Page No.

H4 PV cable connector 1-2

H4 PV panel connector 3-4

H4 Stamped and formed contact 5

H4 Branch connector 6

H4 Protective cap 7

PowerLink Solar cable 8-9

H4 Over-molded PV cable assemblies 10

PV cable assemblies 11-12

Amphenol PV Junction box ordering inquiry form 13

HelioLink™ PV Junction box 14-15

Hercules ™ PV Junction box 16-17

Transformer ™ PV Junction box 18-19

Thin-film PV Junction box 20-21

Pencil PV Junction box 22

Amphoton PV Junction box 23-27

H4 PV cable connector

H4 Female PV cable connector

H4 Male PV cable connector

H4 Female socket contact

H4 Male pin contact

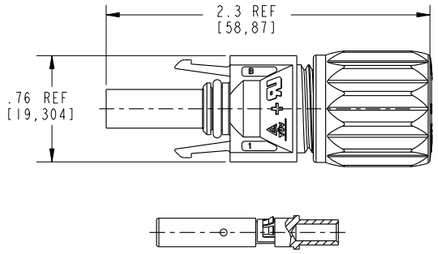

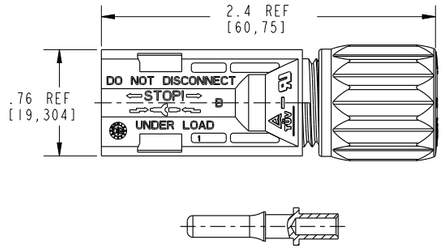

250535 TÜV R 50157783 E 339277

Technical Data

Rated current	32A(2.5mm^2,14AWG),40A(4.0mm^2,12AWG), 44A(6.0mm^2,10AWG), 65A(10.0mm^2, 8AWG)
Rated voltage	1000V (IEC/CEI), 600V(UL)
Test voltage	6kV for 1 minute, 10kV impulse (1.2/50 μS)(IEC)
Typical contact resistance	0.25m Ω
Contact material	Copper, tin plated
Contact system	Machined/cold formed contact with RADSOK® insert
Insulation material	PC
Locking mechanism	Snap-lock, special unlocking tool required to un-mate as required by NEC2008
Cable strain relief	Compression gland with ratcheting gland nut
Degree of protection	IP68 (1 meter, 1 hour) mated
Safety class	II (IEC61140)
Pollution degree	2 (IEC60664)
Overvoltage category	III (IEC60664)
Flame class	UL94 V-0
Ambient temperature range	-40°C--- +90°C

Voltage, LLC
EX1010-26

How to order

Product line		Product type		Gender		Connector type		Cable size		Approvals		Packaging		Variations	
H4	Helios H4	C	Connector	F	Female +	C	Cable gland	2	2.5 mm²/14AWG	T	TÜV	I	Single	S	S&F contact (single contact)
				M	Male -			4	4.0 mm²/12AWG	U	UL	C	100pcs bags	T	Screw termination (field installation)
				P	Mated pair			6	6.0 mm²/10AWG	D	Dual	D	500pcs bags		
								8	10.0mm²/8AWG			M	1000pcs bags		
								0	Less contact			N	2000pcs loose		

Ordering example:

H4 C F C 4 D N

- H4 PV connector
- Female part
- Cable connector
- 4.0mm²/12AWG cable size
- Dual approvals
- 2000pcs per package

How to order assembly tools

Description	Ordering code
H4 Strip tool	H4TS0000
H4 Crimp Tool	H4TC0000
H4 Crimp Tool(new)	H4TC0001
H4 Wrench Tool(new)	H4TW0001
H4 Universal Unlocking Tool	H4TU0000
H4 Tool-Kit	H4TK0000

Assembly Tool

Tool-Kit

Universal unlocking tool

Crimp tool for 2.5mm²-6.0mm² (14AWG-10AWG)

Wrench tool

Strip tool for 2.5mm²-6.0mm² (14AWG-10AWG)

H4 PV panel connector

H4 Female PV panel connector

H4 Male PV panel connector

H4 Female socket contact

H4 Male pin contact

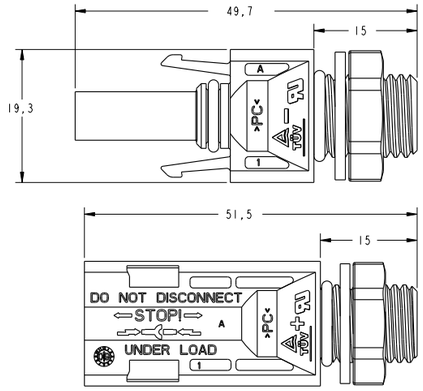

M12

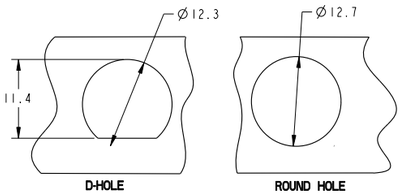

MOUNTING HOLE
D-HOLE OR ROUND HOLE

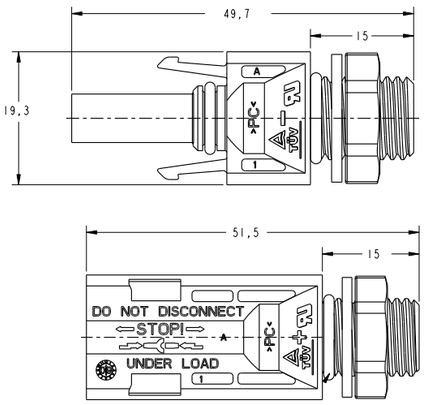

M14

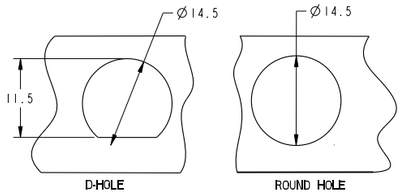

MOUNTING HOLE
D-HOLE OR ROUND HOLE

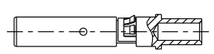

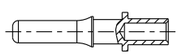

TÜV R50157783 E339277

Voltage, LLC
EX1010-27

Technical Data

Rated current	32A(2.5mm²,14AWG),40A(4.0mm²,12AWG), 44A(6.0mm²,10AWG), 65A(10.0mm², 8AWG)
Rated voltage	1000V (IEC/CEI), 600V(UL)
Test voltage	6kV for 1 minute, 10kV impulse (1.2/50 μS)(IEC)
Typical contact resistance	0.25mΩ
Contact material	Copper, tin plated
Contact system	Machined/cold formed contact with RADSOK® insert
Insulation material	PC
Locking mechanism	Snap-lock, special unlocking tool required to un-mate as required by NEC2008
Cable strain relief	Compression gland with ratcheting gland nut
Degree of protection	IP68 (1 meter, 1 hour) mated
Safety class	II (IEC61140)
Pollution degree	2 (IEC60664)
Overvoltage category	III (IEC60664)
Flame class	UL94 V-0
Ambient temperature range	-40°C--- +90°C

How to order

Product line		Product type		Gender		Connector type		Cable size		Approvals		Packaging		Variations	
H4	Helios H4	C	Connector	F	Female +	M	Panel M12	2	2.5 mm²/14AWG	T	TÜV	I	Single	S	S&F contact (single contacts)
				M	Male -	N	Panel M14	4	4.0 mm²/12AWG	U	UL	C	100pcs bags	T	Screw termination (field installation)
				P	Mated pair			6	6.0 mm²/10AWG	D	Dual	D	500pcs bags		
								8	10.0mm²/8AWG			M	1000pcs bags		
								0	Less contact			N	2000pcs loose		

Ordering example:

H4 C F M 6 D N

- H4 PV connector
- Female part
- M12 panel connector
- 6.0mm²/10AWG cable size
- Dual approvals
- 2000pcs per package

H4 Stamped and formed contact

■ Packaged on a reel for automatic assembly

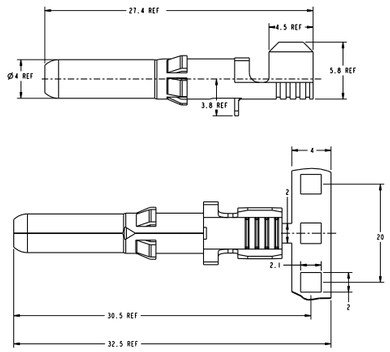

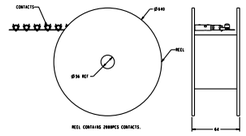

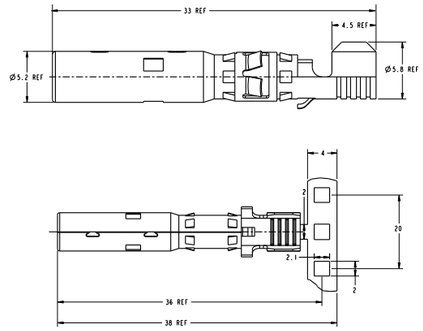

How to order

Product line		Contact type		Gender		Cable size		Packaging		Variations
H4	Helios H4	F	S&F contact	F	Female +	2	2.5 mm²/14AWG	R	2000pcs reel	
				M	Male -	4	4.0 mm²/12AWG;6.0mm²/10AWG			

* The above code applies to the H4 cable connector and H4 panel connector with Stamped and Formed contacts.

Ordering example:

H4F F 2 R

- H4 stamped and formed contact
- Female part
- 2.5mm²/14AWG cable size
- 2000pcs S&F contacts on reel

Voltage, LLC
EX1010-28

H4 Branch Connector

■ Quick field solar installation

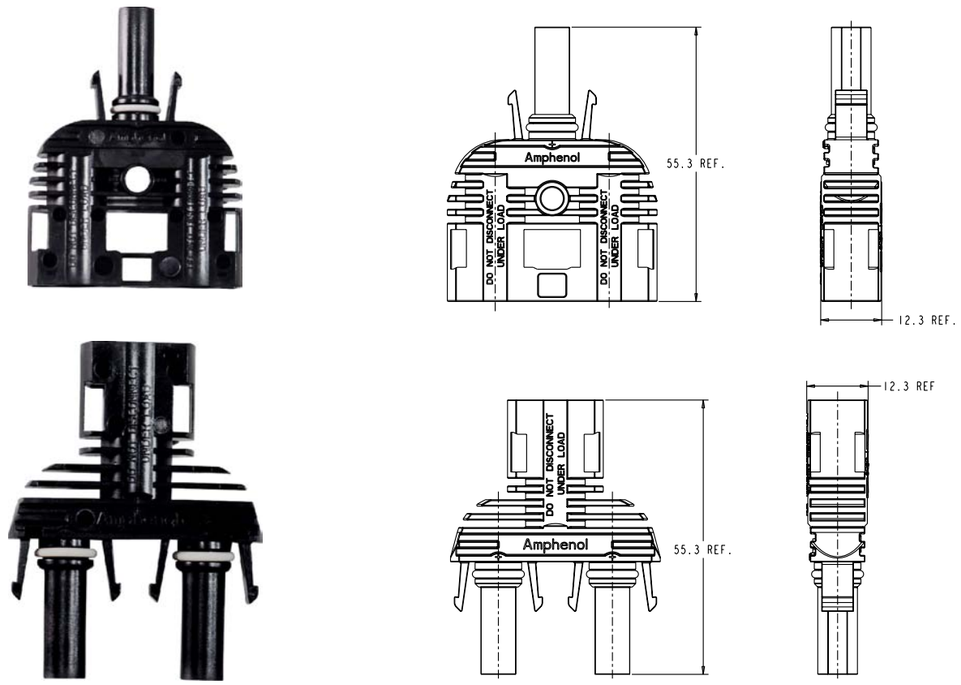

How to order

Product line		Product type		Gender	
H4	Helios H4	Y	Branch connector	X	FFM (branch 2 female/1 male)
				Y	MMF (branch 2 male/1 female)

Ordering example:

H4 Y Y

H4 branch connector

2 males, 1 female

H4 Protective Cap

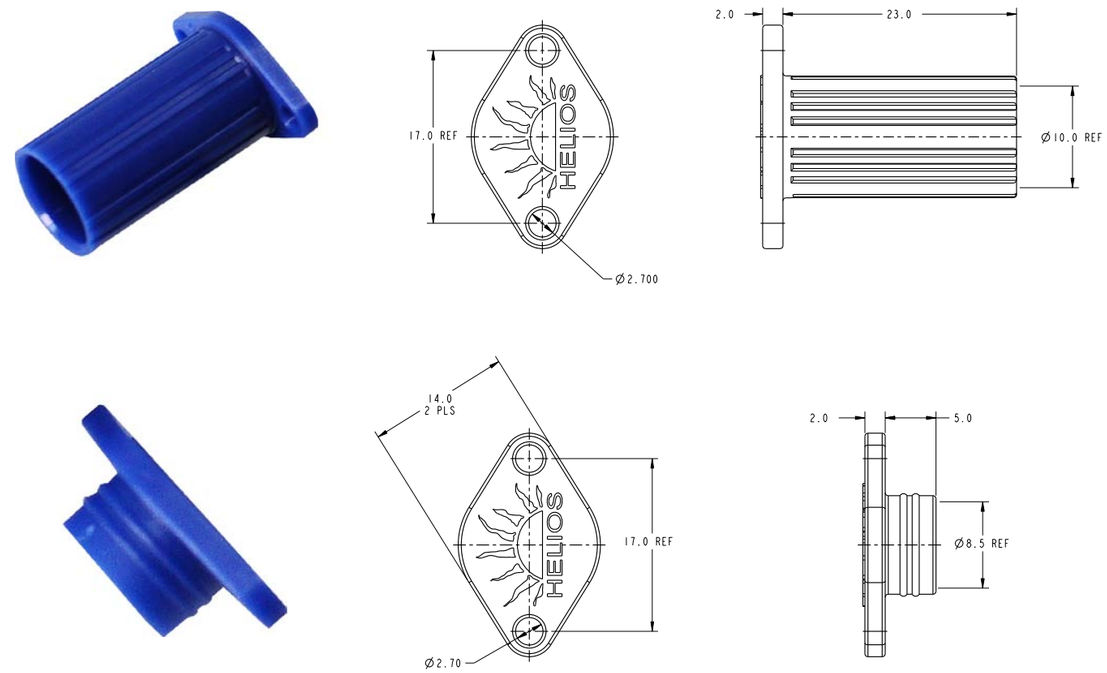

How to order

Product line		Product type		Gender		Variations
H4	Helios H4	P	Protective cap	F	Female +	
				M	Male -	

Ordering example:

H4 P F

H4 protective cap

Female part

Voltage, LLC
EX1010-29

PowerLink solar cable

Halogen free photovoltaic cables are used as the interconnection wiring for photovoltaic power systems.

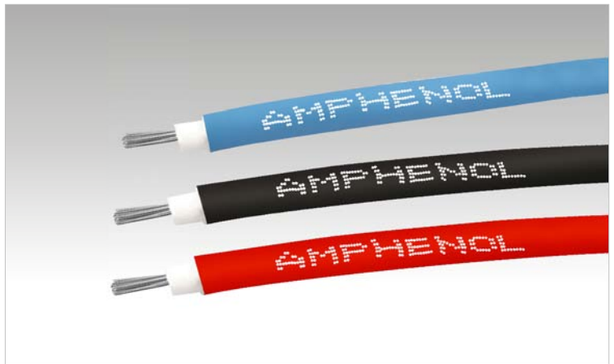

Features:

Flexibility at low temperature
Thermoset-insulated conductor
Thermoplastic jacket
Long-term insulation resistance to moisture
Range from 1.5mm² to 25mm²

TÜV R50191837 E341118

Certificate:

TÜV and UL certified according to the latest regulations

Structure:

Conductor: Stranded bare or tinned copper
Insulation: XLPE material (white and black)
Jacket: XLPE material (Black, Red and Blue)

Temperature range:
-40 °C to +125°C
Environmental influence resistance:
Acid, alkalinity, UV, ozone and hydrolysis-resistant.

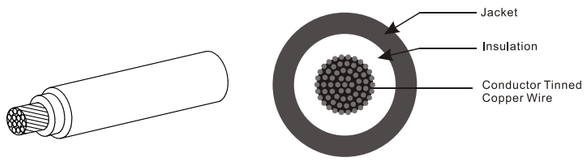

ArmorLink Solar Cable

Advantages:

- Rodent resistant
- Extra protection layer

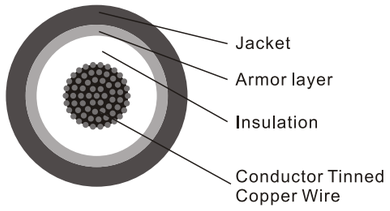

Made using UL4703 and TÜV 2Pfg 1169 as guidelines.

TÜV in process in process

Amphenol®

PowerLink solar cable application:

Used in heavy-duty and harsh environment interconnection wiring, can be easily combined with our Helios H4 PV connectorand junction box series for photovoltaic system applications.

Cold
Snow
Low temperature

Sun
Drought
High tmeperature

Rain
Moisture

How to order

Product line		Product		Cable color		Cable type		Cable size		Approvals		Packaging		Variations
HC	Helios cable	P	PowerLink - Standard	B	Black - standard	L	VDE 0295 - CLASS 2 7 STRANDS (USE -2)	1	1.5 mm²/16AWG	T	T Ü V	A	24" REEL	
		A	ArmorLink -Rodent Proof	R	Red	M	MULTI WIRE 19 STRANDS (UL only)	2	2.5 mm²/14AWG	U	UL	B	36" REEL	
				L	Blue	H	VDE 0295 - CLASS 5 (UL, TUV and Dual)	4	4 mm²/12AWG	D	Dual	C	Bag	
				G	Grey			5	25mm²/3AWG	N	None			
				O	Brown			6	6 mm²/10AWG					
								8	10mm²/8AWG					
								9	16mm²/4AWG					

Notes: UL cable comes in AWG only
TÜV cable comes in mm² only
Dual cable comes marked with AWG and mm²
VDE 2095-CLASS 2 is 7 strands cable
Multi wire stranding is 19 strands cable
VDE 2095-CLASS 5 is high stranded cable with extra flexibility

Packaging units

Ordering example:2000m TÜV 2.5mm² black cable.
Ordering Number is:HCPBH2TA
Delivery package: 1 pc of 24'' reel.

Wire AWG	Meters/ reel	
	24"	36"
14AWG/2.5mm²	2000m	4500m
12AWG/4.0mm²	1800m	4000m
10AWG/6.0mm²	1600m	3800m
8AWG/10mm²	1400m	3200m

Voltage, LLC
EX1010-30

H4 Over-molded PV cable assemblies

■ Over-molded H4

Protection degree: IP68
Cable range: 2.5mm²/14AWG- 10.0mm²/8AWG
Temperature range: -40° C - +90° C

TÜV R 50196698 E339277

■ T-junction

Protection degree: IP68
Cable range: 2.5mm²/14AWG- 10.0mm²/8AWG
Temperature range: -40° C - +90° C

TÜV in process in process

■ R-junction

Protection degree: IP68
Cable range: 2.5mm²/14AWG- 10.0mm²/8AWG
Temperature range: -40° C - +90° C

TÜV in process in process

■ Y-junction

Protection degree: IP68
Cable range: 2.5mm²/14AWG- 10.0mm²/8AWG
Temperature range: -40° C - +90° C

TÜV in process in process

■ Over-molded H4 branch

Protection degree: IP68
Cable range: 2.5mm²/14AWG- 10.0mm²/8AWG
Temperature range: -40° C - +90° C

TÜV in process in process

■ X-junction

Protection degree: IP68
Cable range: 2.5mm²/14AWG- 10.0mm²/8AWG
Temperature range: -40° C - +90° C

TÜV in process in process

■ Inline fuse connector

Protection degree: IP68
Cable range: 2.5mm²/14AWG- 10.0mm²/8AWG
Temperature range: -40° C - +90° C
Surge rating: 600A max
Blocking voltage: customer specified

TÜV in process in process

■ Over-molded inline fuse cable assmbly

Protection degree: IP68
Cable range: 2.5mm²/14AWG- 10.0mm²/8AWG
Temperature range: -40° C - +90° C
Surge rating: 600A max
Blocking voltage: customer specified

TÜV in process in process

■ Inline diode connector

Protection degree: IP68
Cable range: 2.5mm²/14AWG- 10.0mm²/8AWG
Temperature range: -40° C - +90° C
Withstand rating: 10kA
Voltage rating: 1500V max
Amperage rating: 30A max
Connector options: M-M,M-F,F-F

TÜV in process in process

■ Over-molded inline diode cable assembly

Protection degree: IP68
Cable range: 2.5mm²/14AWG- 10.0mm²/8AWG
Temperature range: -40° C - +90° C
Withstand rating: 10kA
Voltage rating: 1500V max
Amperage rating: 30A max
Connector options: M-M,M-F,F-F

TÜV in process in process

PV cable assemblies

How to order

Product line		Product type		Gender		Connector type		Cable size		Approvals	
H4	Helios H4	C	Connector	F	Female +	C	Cable gland	2	2.5 mm²/14AWG	T	TÜV
				M	Male -	M	Panel M12	4	4.0 mm²/12AWG	U	UL
				P	Mated pair	N	Panel M14	6	6.0 mm²/10AWG	D	Dual
						O	Over-mold	8	10.0mm²/8AWG		

Cable length(mm)	Cable color		Termination		Variations
	B	Black	PS	Pre-stripped wire	
	R	Red	R	Ring terminal	
	L	Blue	IR	Isolated ring terminal	
	G	Grey	T	Tube terminal	
	O	Brown	IT	Isolated tube terminal	

Examples of cable assemblies and definition of cable length:

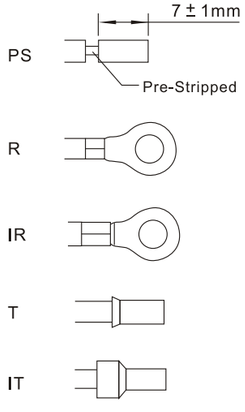

* Other terminals and customized strip length are available.

Voltage, LLC
EX1010-31

Ordering examples:

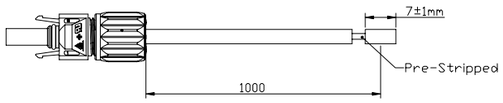

■ H4CFC4D-1000mm-B-PS

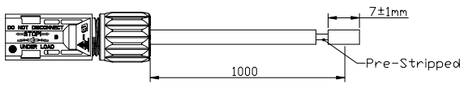

■ H4CMC4D-1000mm-B-PS

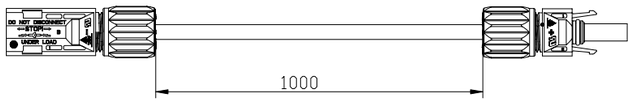

■ H4CPC4D-1000mm-B

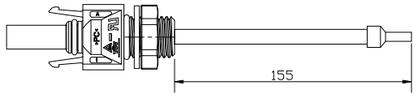

■ H4CFM6D-155mm-B-T

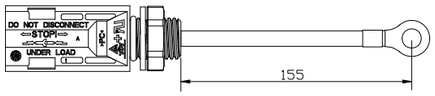

■ H4CMM4D-155mm-B-IR

H4 cable assemblies ordering inquiry form

Please fill the below form based on your application:

Customer Name	Country/Area	Reference No.	Quantity

Left side	Cable part	Right side
	Cable size 2.5mm²/ 14AWG☐ 4.0mm²/ 12AWG☐ 6.0mm²/ 10AWG☐ 10.0mm²/8AWG☐ Cable approvals TÜV☐ UI☐ Dual☐ Cable color Black☐ Blue ☐ Red☐ Grey ☐ Brown☐	

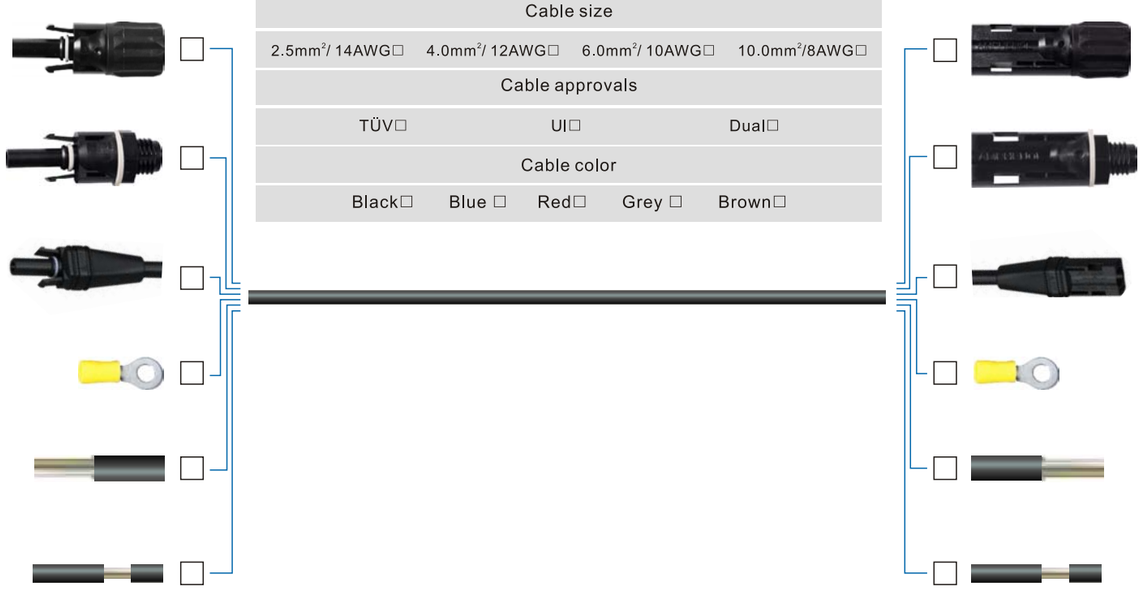

Amphenol PV Junction box ordering inquiry form

Please fill in the following form so we can select the right product for your application.

Amphenol

Customer Name:		Country/Area:		Sales:	
Part Name:		Part Name:		Request Date:	
Description:				Demand / Year:	
Target Price:		Sample request:		Sample request date:	

Information 1:（Photovoltaic Cable Standard）: UL4703 and/or UL854，TÜV2Pfg1169/2007 compliant

Information 2:（Photovoltaic Connector Standard）: UL6703(UL1703)，TÜV EN50521/2008 compliant

Information 3:（Photovoltaic Junction Box Standard）: UL1703，TÜV DIN V VDE V 0126-5/2008 (&EN50548) compliant

Location: ☐ North-America ☐ Europe ☐ Other

Certification: ☐ TÜV Cert. ☐ UL Cert. ☐ TÜV&UL Cert.

Junction Box Type: ☐ BIPV ☐ Amorphous Silicon ☐ Monocrystalline Silicon ☐ Polycrystalline silicon ☐ Other

Rails Qty:	Doide Qty:	Nominal Power[W]:	Open Circuit Voltage[V]:
Short Circuit Current[A]:	Max Power Voltage[V]:	Max Power Current[A]:	Max System Voltage[V]:
Cable length(mm): ☐ Includes connector ☐ Does not include connector			Copper foil width/thickness:

Cable Size	TÜV Spec.	☐ 2.5mm² ☐ 4.0mm² ☐ 6.0mm²	Cable color	☐ Black(Recommended)
	UL Spec.	☐ 14AWG ☐ 12AWG ☐ 10AWG		
	TÜV&UL Spec.	☐ 2.5mm²/14AWG ☐ 4.0mm²/12AWG ☐ 6.0mm²/10AWG		☐ Black&Red

Connector: ☐ Amphenol H4 ☐ Other:

Attachment: ☐ (Attach drawing) ☐ (Attach Sample) ☐ (Attach remark)

Comments:

Voltage, LLC
EX1010-32

HelioLink™ PV Junction Box

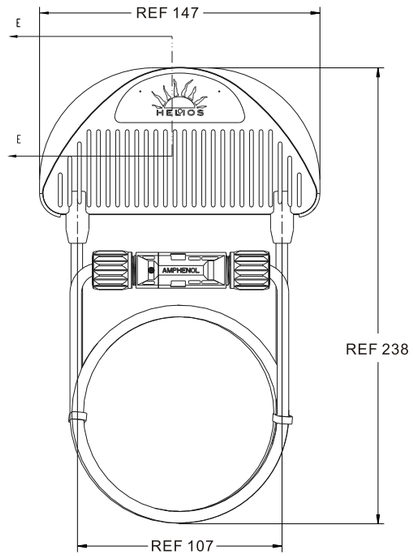

Features:

- Hermetically sealed design; no moisture ingress, no condensation
- Patented, finger-type heat exchanger protects diodes from thermal destruction, even under adverse conditions
- Thermal seperation from backsheet prevents formation of hot-spot
- Designed for automatic placement and termination
- Compact design
- Built to last, maintenance free

TÜV in process in process

Technical Data	
Rated current	Up to 30A
Rated operating voltage	1000V DC（TÜV）, 600V DC (UL)
Rated max. reverse voltage per diode	45 VDC (standard) 120 VDC (optional)
Protection degree	IP 68 (potted), IP67 (non-potted)
Flame class	UL94-V0
Temperature range	-40° C ~ +90° C
Connection method	welding
Waterproofing structure	Hermetically sealed, over-molded body
Termination seal	Termination area may be potted (no seal on cover) or non-potted (lip seal on cover)

How to order

Product line		Product type		Terminals and Diodes		Terminal style		Diode rating	
HB	Helios JB	B	HelioLink junction box	A	4 contacts/3 diodes	A	Clamp contacts	P	20A 100V
						B	Solder contacts	Q	20A 45V

Sealing type		Cable size		Adhesive		Cable length (Ln)*		Cable length (Lp)*		Variations
A	Potting	A	6.0 mm^2/10AWG	Y	Yes	A	1000mm	A	1000mm	
B	O-ring	B	4.0mm^2/12AWG	N	No	B	900mm	B	900mm	

* Ln:cable length on negative end; Lp:cable length on positive end

-Please contact us for additional variations

Ordering example:

HB B A B Q B A N AA

- HB — HelioLink PV junction box
- B — 4 contacts/3 diodes
- A — Soldering connection
- B — Diode rated 20A/45V
- Q — O-ring seal
- B — 6.0mm^2/10AWG cable size
- A — Without adhesive tape
- N — 1000mm cable length from both negative and positive end
- AA — 1000mm cable length from both negative and positive end

Voltage, LLC
EX1010-33

Hercules ™ PV Junction Box

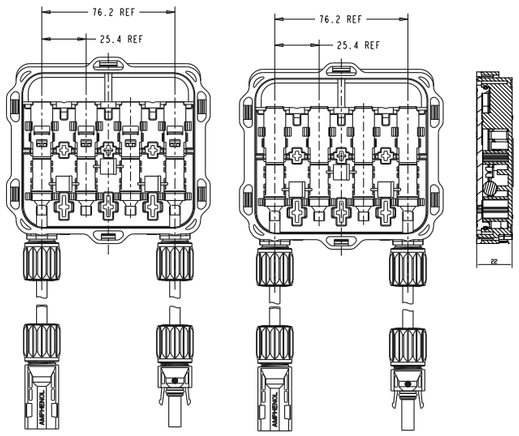

Features:

Same dimensions, multi variations
IP67 rated
Breathing hole for air exchange

TÜV R 50200258 E346053

Technical data	
Terminal quantity	3 rails or 4rails
Rated current	30A
Rated voltage	UL: 600V DC IEC/TÜV: 1000V DC
Number of bypass diodes	2 or 3 or 4 or 6
Connection cross-section	12AWG/4.0mm^2 or 10AWG/6.0mm^2
Temperature range	-40°C to +90°C
Protection degree	IP67
Dimensions	117x107x22mm
Flame class	UL94 V-0; 5VA
Ribbon connection	Clamping,soldering or spot welding
Breathing hole	With or Without
Connector type	Amphenol H4

How to order

Product line		Product type		Terminals and Diodes		Terminal style		Diode rating	
HB	Helios JB	H	Hercules Junction box	A	4 contacts/3 diodes	A	Clamp contacts	A	12A 200V
				B	3 contacts(2 left/1 right)/2 diodes	B	Solder contacts	B	12A 40V
				C	3 contacts(1 left/2 right)/2 diodes	C	Solder contacts left&right opening	C	15A 40V
				D	4 contacts/6 diodes	D	Solder contacts left opening	D	30A 40V
				E	3 contacts(2 left/1 right)/4 diodes	E	Solder contacts right opening	E	20A 40V
				F	3 contacts(1 left/2 right)/4 diodes	F	Spot weld contacts	F	15A 45V

Sealing type		Breathing hole		Cable size		Adhesive		Cable length (Ln)*		Cable length (Lp)*		Variations
A	Potting	Y	Yes	A	6.0 mm^2/10AWG	Y	Yes	A	1000mm	A	1000mm	
B	O-ring	N	No	B	4.0mm^2/12AWG	N	No	B	900mm	B	900mm	

* Ln:cable length on negative end; Lp:cable length on positive end

- Please contact us for additional variations

Ordering example:

HB H A B C A Y A N AA

- HB H — Hercules PV junction box
- A — 4 contacts/3 diodes
- B — Soldering connection
- C — Diode rated 15A/40V
- A — Potting seal
- Y — With breathing hole
- A — 6.0mm^2/10AWG cable size
- N — Without adhesive tape
- AA — 1000mm cable length from both negative and positive end

Voltage, LLC
EX1010-34

Transformer ™ PV Junction Box

Features:

Same dimensions,multi variations
Per-potted for high reliability
Low profile

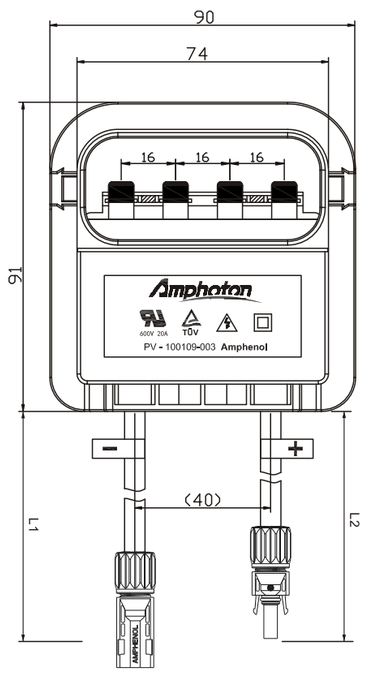

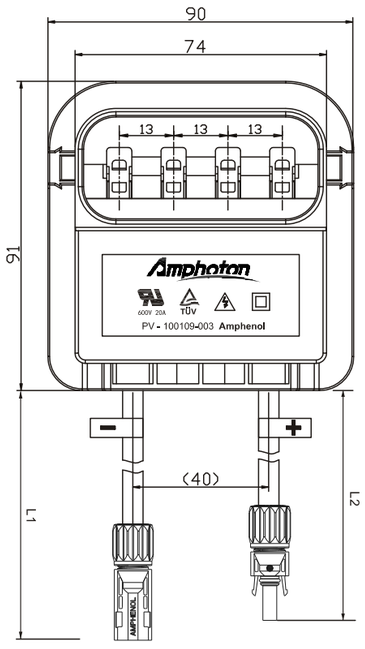

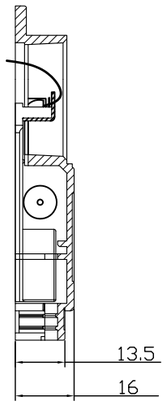

Technical Data

Rated current	20A
Rated voltage	1000V DC (IEC/CEI), 600V DC (UL)
Terminal ribbon	2/3/4pcs
Contact material	Copper, Tin plated
Insulation material	PPE
Bypass diode	1/2/3pcs
Bypass current	10,12,15A
Dimension	91x90x17mm
Protection degree	IP65(Gasket), IP67(Potting)
Temperature range	-40° C - +90° C
Certificate	TÜV/UL

How to order

Product line		Product type		Terminals and Diodes		Terminal style		Diode rating	
HB	Helios JB	C	Transformer junction box	A	4 contacts/3 diodes	A	Clamp contacts	C	15A 40V
				B	3 contacts(2 left/1 right)/2 diodes	B	Solder contacts	F	15A 45V
				C	3 contacts(1 left/2 right)/2 diodes			Z	10A 50V

Sealing type		Cable size		Adhesive		Cable length (Ln)*		Cable length (Lp)*		Variations
A	Potting	A	6.0 mm^2/10AWG	Y	Yes	A	1000mm each	A	1000mm	
B	O-ring	B	4.0mm^2/12AWG	N	No	B	900mm each	B	900mm	

* Ln:cable length on negative end; Lp:cable length on positive end
- Please contact us for additional variations

Ordering example:

HB C A B C A A Y AA

- Transformer PV junction box
- 4 contacts/3 diodes
- Soldering connection
- Diode rated 15A/40V
- Potting seal
- 6.0mm^2/10AWG cable size
- With adhesive tape
- 1000mm cable length from both negative and positive end

Voltage, LLC
EX1010-35

Thin-film PV junction box

Features:

Low profile
Over-molded design for better sealing
SMD for efficient heat dissipation

TÜV in process in process

Technical Data

Rated current	Up to 20A
Rated voltage	1000V DC（TÜV）, 600V(UL)
Protection degree	IP 67
Flame class	UL94 V-0
Temperature range	-40° C ~ +90° C
Termination style	Solder
Sealing of cover	Potting

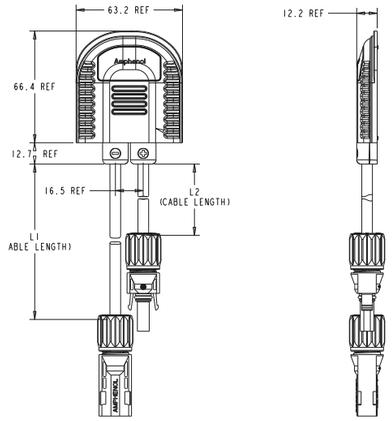

How to order

Product line		Product type		Terminals and Diodes		Terminal style		Diode rating	
HB	Helios JB	T	Thin flim junction box	G	2 contacts/1 diode	B	Solder contacts	G	5A 1000V
				H	2 contacts W/O diode			H	10A 1000V
								J	8A 1000V
								K	15A 1000V
								P	20A 100V
								Q	20A 45V
								N	N/A

Sealing type		Cable size		Adhesive		Cable length (Ln)*		Cable length (Lp)*		Variations
A	Potting	B	4.0mm²/12AWG	Y	Yes	A	1000mm	A	1000mm	
		C	2.5 mm²/14AWG	N	No	B	900mm	B	900mm	

* Ln:cable length on negative end; Lp:cable length on positive end
- Please contact us for additional variations

Ordering example:

HB T G B Q A C N AA

- Thin-film PV junction box
- 2 contacts/1 diode
- Soldering connection
- Diode rated 20A/45V
- Potting seal
- 2.5mm²/14AWG cable size
- Without adhesive tape
- 1000mm cable length from both negative and positive end

Voltage, LLC
EX1010-36

Pencil PV junction box for BIPV

Features:
Low-profile, stable performance and easy to install
Provides the user with a practical and economical solutioin
Tin-solder termination

TÜV

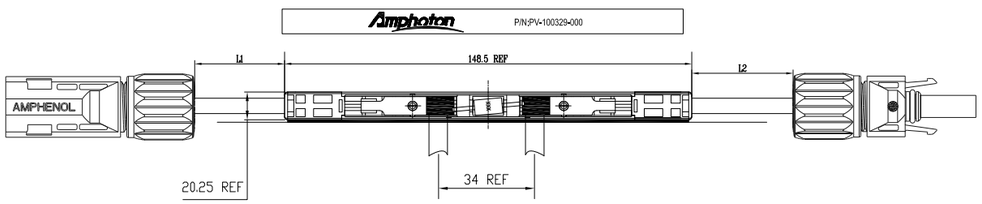

Technical Data

Max. voltage	1000V
Rated current	20A
Bypass current	3A/10A
Scope of power	40 ~ 120W
Ambient temperature	-40. ~+85.C
Protection degree	IP65
Cable cross-section	2.5mm2
Dimension L*W*H	130 * 8 * 9mm
Part number	PV-100329-000

Amphoton PV-090729 series

Features:
- Sealed design with high heat dissipation
- TÜV/UL approval

Amphoton PV-090730 series

Features:
- Sealed design with high heat dissipation
- TÜV/UL dual approval

Amphoton PV-090809 series

Features:
- Sealed design with high heat dissipation
- TÜV approval

Voltage, LLC
EX1010-37

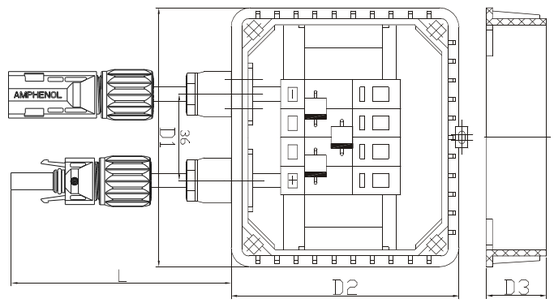

D3	25	PV-090729-003
D2	130	PV-090729-006
D1	150	

TÜV

Technical Data

Order No.	1	2
Part Number	PV-090729-003	PV-090729-006
Version	4 poles	4 poles
Rated current	20A	20A
Rated voltage	DC1000V(TÜV), DC600V(UL)	DC1000V(TÜV), DC600V(UL)
Number of bypass diodes	3	6
Connection cross-section	4mm², 12AWG	4mm², 12AWG
Temperature range	-40℃ up to +85℃	-40℃ up to +85
Protetion degree	IP 65	IP 65
Dimensions	150 x 130 x 26mm	150 x 130 x 26mm
Flame class	UL94-V0	UL94-V0
Certificate	TÜV/UL	TÜV/UL

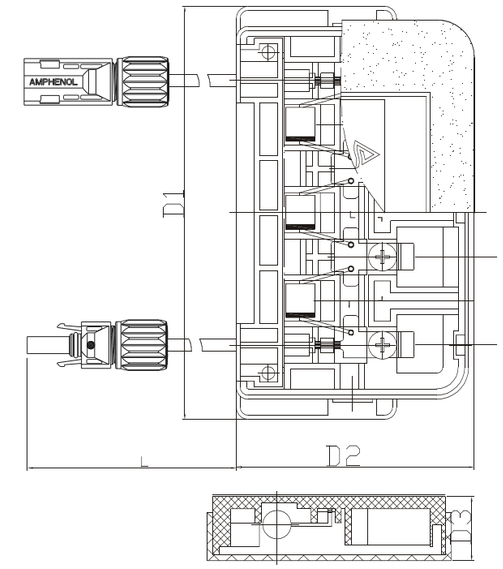

D3	16	PV-090730-002
D2	58	PV-090730-003
D1	103	PV-090730-006

TÜV

Technical Data

Order No.	6	7	8
Part Number	PV-090730-002	PV-090730-003	PV-090730-006
Version	3 poles	4 poles	4 poles
Rated current	20A	20A	20A
Rated voltage	DC1000V(TÜV), DC600V(UL)	DC1000V(TÜV), DC600V(UL)	DC1000V(TÜV), DC600V(UL)
Number of bypass diodes	2	3	6
Connection cross-section	4mm², AWG12	4mm², AWG12	4mm², AWG12
Temperature range	-40℃ up to +85℃	-40℃ up to +85℃	-40℃ up to +85℃
Protetion degree	IP 65	IP 65	IP 65
Dimensions	103 x 58 x 16mm	103 x 58 x 16mm	103 x 58 x 16mm
Flame class	UL94-V0	UL94-V0	UL94-V0
Certificate	TÜV/UL	TÜV/UL	TÜV/UL

Voltage, LLC
EX1010-38

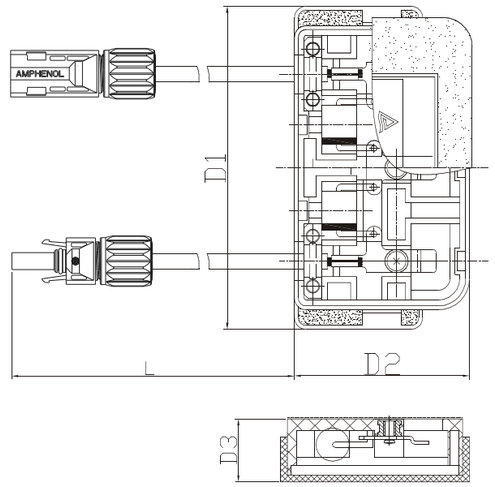

D3	16	PV-090809-001
D2	48	
D1	72	
D3	16.5	PV-090809-002
D2	45	
D1	83	

TÜV

Technical Data

Order No.	12	13
Part Number	PV-090809-001	PV-090809-002
Version	2 poles	3 poles
Rated current	20A	20A
Rated voltage	DC1000V(TÜV)	DC1000V(TÜV)
Number of bypass diodes	1	2
Connection cross-section	4mm², 12AWG	4mm², 12AWG
Temperature range	-40℃ up to +85℃	-40℃ up to +85℃
Protetion degree	IP 65	IP 65
Dimensions	72 x 48 x 16mm	83 x 45 x 16.5mm
Flame class	UL94-V0	UL94-V0
Certificate	TÜV	TÜV

How to order

Amphoto junction box P/N	Cable size		Cable length (Ln)*		Cable length (Lp)*		Variations
PV -090729-003	A	6.0mm²/10AWG	A	1000mm	A	1000mm	
	B	4.0mm²/12AWG	B	900mm	B	900mm	

* Ln:cable length on negative end; Lp:cable length on positive end
- Please contact us for additional variations

Amphoton PV junction box series ordering example:

PV -090729-003 B AA

Amphoton PV junction box P/N

4.0mm²/12AWG cable size

1000mm cable length from both negative and positive end

Voltage, LLC
EX1010-39