GLS CORPORATION

Overmolding Guide

Realize TPE Technology

The GLS CORPORATION Potential

Feel the difference®

Voltage, LLC
EX1015-1

INTRODUCTION

About GLS

From soft touch grips on personal care items such as toothbrushes and razors, to durable ergonomic non-slip grips on hand and power tools, thermoplastic elastomer (TPE) compounds from GLS Corporation will add the right "feel" to your product.

With over 20 years of experience in the industry, GLS Thermoplastic Elastomers Division is recognized as the leader in soft thermoplastic elastomers. GLS has specialized in taking TPE technology to new levels, including the development of the softest and clearest commercially available TPEs for injection molding in the industry.

Today our unique TPE product line is the industry leader, and combines the best properties of vulcanized rubber with the convenience of thermoplastic processing.

When you work with GLS, you get the benefit of an exceptional application development team. From our knowledgeable multinational team of sales engineers, to our mold/part design engineers, material characterization engineers, color chemists, adhesion chemists, and polymer engineers, GLS can help you develop your next breakthrough product.

Markets Served

GLS Thermoplastic Elastomers Division leads the industry in soft TPE compounds and alloys, with hardnesses ranging from 3 to 90 Shore A. GLS is known in the industry for innovative, easily processed, consistent quality products.

GLS specializes in application-specific custom compounds for injection molding and extrusion. Product lines include DYNAFLEX® TPE compounds, KRATON® TPR compounds, VERSAFLEX™ TPE alloys, VERSALLOY™ elastomer alloys, and custom compounds.

Products are offered to designers who desire an ergonomic, soft touch feel for their application, or who require alternatives to PVC, latex, or thermoset rubbers. Primary markets include personal care products, sporting goods, infant care, housewares, hardware, power tools, hand-held electronics, telecommunications, and medical.

About this Guide

This guide will assist the Process Engineer, Part Designer, Tool Designer and Toolmaker in the use of GLS TPE compounds. The guide is based on over ten years of experience of GLS chemists and engineers on overmolding TPEs. The purpose of this guide is to emphasize basic principles of overmolding.

GLS CORPORATION

© 2002 GLS Corporation

TABLE OF CONTENTS

DESCRIPTION SECTION PAGE

CHAPTER 1
Overmolding Process Techniques

Introduction 1.1 1
Process Techniques for Overmolding . . .1.2 1
Multiple Material Molding 1.2.1 1
Moving-Core Process . . . . . .1.2.1.1 . . .1
Insert Molding 1.2.2 2
Rotary and Shuttle Table Molding 1.2.3 2
Overmolding Process Selection 1.3 3

CHAPTER 2
Overmold Material Selection and Part Design

GLS Product Line 2.1 4
Overmold Material Selection 2.2 5
Adhesion Requirements 2.2.1 5
Material Flow Behavior 2.2.2 5
Hardness 2.2.3 6
General Concepts to Part Design 2.3 6
Ergonomic design 2.3.1 6
Gloss and Clarity 2.3.2 6
Flow Length and Wall Thickness 2.3.3 6
Shrinkage, Warpage, Anisotropy 2.3.4 7
Shut-off Designs 2.3.5 7
Mechanical Interlock Designs 2.3.6 9
Part Design for Specific Applications . . .2.3.7 9
Design of Overmolded Grips . . . . . .2.3.7.1 . . .9
Design of Overmolded Seals . . . . . .2.3.7.2 . . .9
Design of Overmolded Vibration Isolators & Shock Absorbers . . . . . .2.3.7.3 . .10
Design of Over-molded Electrical Components . . . . . .2.3.7.4 . .10
Design of Over-molded Metal Insert Components . . . . . .2.3.7.5 . .10

DESCRIPTION SECTION PAGE

CHAPTER 3
Mold Design

Mold Construction 3.1 11
General Concepts to Mold Design 3.2 11
Runner Design and Configuration 3.3 11
Hot Runner Manifold Systems 3.4 12
Gate Design and Location 3.5 12

CHAPTER 4
OverMolding: Processing Considerations

Machine Selection 4.1 16
Material handling and Preparation 4.2 16
Drying . . . . . .4.2.1 . . .16
Coloring . . . . . .4.2.2 . . .16
Regrind ..... 4.2.3 . . .17
Purging . . . . . .4.2.4 . . .17
Overmolding Process Conditions 4.3 17
Injection Pressure and Injection Speed . .4.3.1 . . .17
Melt temperature . . . . . .4.3.2 . . .17
Substrate Temperature . . . . . .4.3.3 . . .17
Mold Temperature . . . . . .4.3.4 . . .18
Cooling Time . . . . . .4.3.5 . . .18
Summary: Factors affecting Adhesion . . .4.4 18
Troubleshooting for Overmolding 4.5 19

Voltage, LLC
EX1015-3

© 2002 GLS Corporation

CHAPTER 1 OVERMOLDING PROCESS TECHNIQUES

1.1 Introduction

Overmolding utilizes the injection molding process to apply one material [Overmold] onto another material [Substrate]. The overmolded material should form a bond with the substrate that endures the end-use environment. It can provide a soft feel and/or non-slip grip surface for improved product features or performance. It can also be used as an insulator from heat, vibration, or electricity. Overmolding eliminates the need for adhesives and primers to bond TPEs to rigid substrates.

1.2 Process Techniques for Overmolding

The two primary overmolding processes are Multiple Material Molding and Insert Molding.

1.2.1 Multiple Material Molding

Multiple Material Molding is also sometimes called multicolor or two-shot injection molding. Specialized machines, which have two or more injection units, are used, as shown in Figure 1.1. The injection machine barrels can be configured parallel or perpendicular to each other. The mold consists of two sets of cavities (Cavities 1 and 2). One set molds the substrate and the other molds the overmolding material. If the overmold is only on one side of the part the two B-side cavities are identical.

The two shot molding process includes the following steps:

Step 1. Barrel A fills the substrate set of cavities.

Step 2. After the substrate has cooled, the mold opens and the B-Plate (movable side of the mold), rotates 180° without ejection of the substrate. The mold is closed and Barrel B injects the overmold material and fills the second A half in the stationary side of the mold. If the overmold material is to be molded on both sides of the part, the mold may shuttle the parts between two different sets of A and B cavities, instead of rotating.

Rotary Die v/s Rotary Platen Machines: In some cases, the rotation is built into the machine in the form of a rotary platen on the B half of the press. If a rotary platen is used four independently, mounted mold halves are usually used. In other cases, the rotation may be built into the tool (rotary die) and there are only two mold halves but four sets of mold cavities. The higher cost of rotary dies is justified when part volumes are large (~> 1,000,000 cycles). The larger platen size in rotary platen machines warrants higher capacity machines and also larger floor space.

1.2.1.1 Moving-Core Process

This process uses a hydraulic or air operated moving element in the tool. After the first substrate has been injected and allowed to cool, a mold segment retracts forming a cavity for the TPE overmold material. The TPE is then injected, usually from the side of the cavity exposed when the insert retracts. The advantage of this method is faster cycle times, higher cavitation, and machine efficiency. The limitation is only a uniform thickness of TPE can be applied.

© 2002 GLS Corporation

Figure 1.1: Two shot injection molding machine with parallel barrels. (Photo courtesy of Nissei Corp of America)

1.2.2 Insert Molding

During insert molding, a pre-molded rigid plastic substrate or metal part is inserted into the cavity via robotics or an operator (Figure 1.2). The second (overmold) material is either injected onto one side of the insert or sometimes completely surrounds the insert. Insert Molding uses conventional injection molding equipment.

1.2.3 Rotary or Shuttle Table Molding

A substrate is molded or an insert is placed in the B cavity in the first position using a horizontal injection unit or a robot. The table rotates or shuttles to the next station where the TPE is injected using another horizontal or vertical injection unit. The runner may be placed at the parting line or a hot sprue may be used. For the rotary unit, a third rotation moves the table to an "off-load" station where the completed two component part is ejected.

© 2002 GLS Corporation

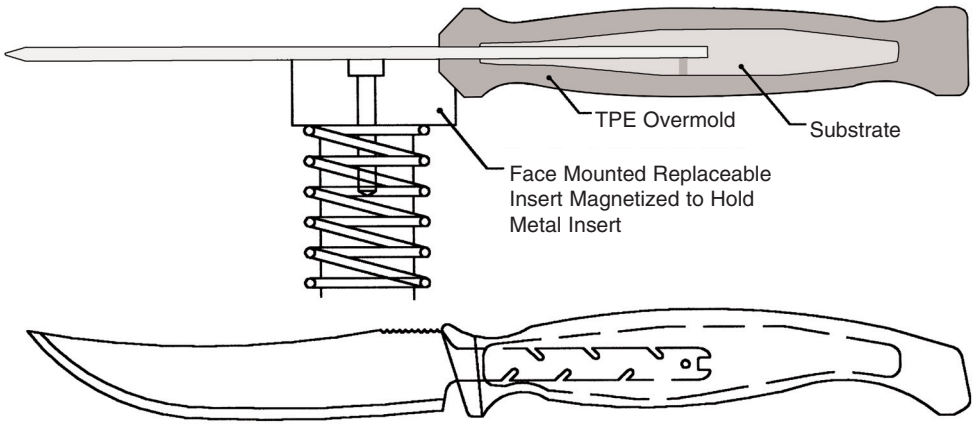

Figure 1.2. Spring-Loaded insert for Metal Tolerances

1.3 Overmolding Process Selection

The decision which of the possible processes and mold design to select depends on:

- Materials selected
- Production quantities required
- Methods available at the production location
- Capital available for tooling
- Local labor cost.

Insert molding must be used if the substrate insert is not a thermoplastic.

Hand inserting of the plastic or metal substrate is advisable if the volumes required are low, local labor costs are low, and tooling cost must be kept low. Shuttle presses may be used for higher production quantities. Robotically placed inserts and rotary table machines may be used where production requirements justify the expense.

If the production quantities are large and/or the local labor cost is high, two material molding machines are advisable for plastic substrates. Hot runner systems using valve gates are advisable for highest production volumes with best part aesthetics.

If the elastomer overmold is to be present on both A and B sides of the parts two material molds that shuttled or rotated between mold sections must be used

Two material molds using moving cores should be used to form a uniform coating on a portion or the complete side of a simple part. Depending on the wall thickness of the elastomer and the substrate, the production rate can be very high.

© 2002 GLS Corporation

CHAPTER 2 OVERMOLD MATERIAL SELECTION AND PART DESIGN

2.1 GLS Product Line

GLS has a diverse product line of TPE compounds and alloys for overmolding onto a variety of substrates. Most Dynaflex®, Versaflex™ CL series and Versalloy™ compounds are suitable for two-shot or insert molding with a polypropylene (PP) as the insert or substrate. The Overmolding (Versaflex™ OM Series) grades are specially formulated to bond to a variety of substrates, including but not limited to: polystyrene (PS), High Impact Polystyrene (HIPS), Acetal (POM), Acrylonitrile Butadiene Styrene (ABS), Nylon 6, Nylon 6,6, Polycarbonate (PC), PC/ABS, Copolyester, Polyphenylene oxide (PPO), Noryl® and alloys or blends of the aforementioned. The Versollan™ TPU alloys provide excellent adhesion to PC, ABS, & PC/ABS blends. For a detailed list of these blends and the corresponding recommended GLS grades contact your GLS Technical Representative. Table 2.1 shows typical substrates, end-use applications and the recommended GLS products.

Table 2.1. Overmolding recommendations

Substrate	Typical Applications	GLS Products Recommended
PP	Personal Care- Toothbrushes, Razors, Pens, Sports-Grips, Handles, Knobs, Flaps, Power & Hand Tools- Handles, Grips, Caster Wheels	Dynaflex® TPE Compounds Kraton® TPE Compounds Versaflex™ CL Compounds Versalloy™ XL9000 Compounds
ABS	Housewares, Toys, Portable Electronics, Grips, Handles, Knobs	Versaflex™ OM TPE Alloys Versollan™ TPE Alloys
PC	Hand-held Electronics, Business Equipment Housings, Sporting Goods, Healthcare Devices, Hand and Power Tools, Telecommunications and Business Machines	Versaflex™ OM TPE Alloys Versollan™ TPE Alloys
PC/ABS	Housewares, Toys, Portable Electronics, Grips, Handles, Knobs, Hand and Power Tools, Sports and Leisure Equipment, Telecommunications and Business Machines	Versaflex™ OM TPE Alloys Versollan™ TPE Alloys
Nylon	Hardware, Lawn and Garden Tools, Power Tools	Versaflex™ OM TPE Alloys
Propionate	Toothbrush Handles, Eyeware, Cosmetic Packaging	Versaflex™ OM TPE Alloys
Copolyester	Toothbrush Handles, Cosmetic Packaging	Versaflex™ OM TPE Alloys

© 2002 GLS Corporation

2.2 Overmold Material Selection

2.2.1 Adhesion Requirements

The required adhesion is dependent on the end-use application and environment. Not all overmold grades bond to all substrates. The substrate type determines which of the GLS overmolding grade must be used to achieve the best bond. Table 2.1 shows the GLS product lines for some common substrates. The end-use environment such as temperature, organic chemical or oil contact also influence which grade to select. Special grades must be used for example in automotive under-hood, dishwasher and microwave safe applications. The expected service life of the product should be considered when establishing adhesion requirements. Contact your GLS representative for specific grade recommendations.

The shear and peel forces that the product will encounter should be considered. Mechanical interlocks and use of undercuts and ribs will create a higher surface area and improve product performance.

2.2.2 Material Flow Behavior

GLS overmolding compounds have relatively low viscosity's. Furthermore, they are shear responsive and their viscosity is reduced when they are processed at high shear rates. This helps them flow into and fill thin walled sections commonly encountered in overmolding. Figure 2.1 shows the range of viscosity of GLS overmold compounds. The lower end of the range is typical for most overmold compounds. For viscosity of a specific grade, refer to the individual Product Technical Datasheet.

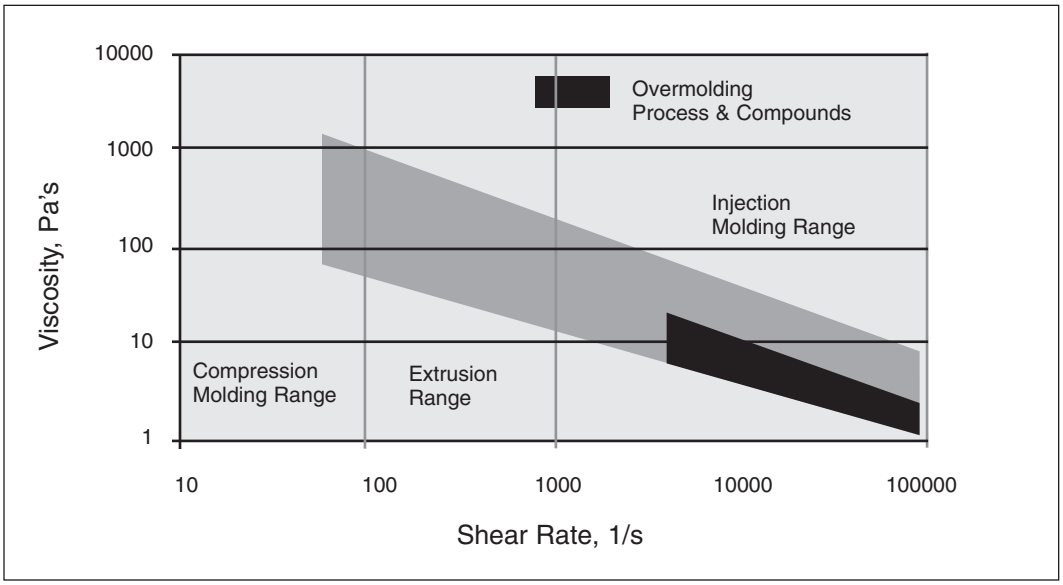

Figure 2.1. Typical range of viscosity of GLS compounds at different shear rates (measured at 390°F (200°C))

© 2002 GLS Corporation

2.2.3 Hardness

GLS offers TPE compounds in a broad range of hardness values from 2 Shore A to 45 Shore D as well as ultra-soft gels in the Shore OO scale. Overmolding applications typically use a hardness between 30 Shore A to 70 Shore A. This range seems to give the best balance between bonding, flow properties, set-up rates and ergonomic feel. In overmolded parts the soft feel, or "apparent hardness", of the overmold is also dependent on thickness.

2.3 General Concepts to Part Design

The wall thickness of the substrate and overmold should be as uniform as possible to obtain the best cycle time. Wall thickness in the range from 0.060" to 0.120" will ensure good bonding in most overmolding applications. If the part requires the use of thick sections, they should be cored out to minimize shrinkage problems and to reduce the part weight and cycle time. Transitions between wall thickness should be gradual to reduce flow problems such as back fills and gas traps. The use of radii (0.020" minimum) in sharp corners helps reduce localized stress. Deep unventable blind pockets or ribs should be avoided. Long draws should have a 3-5° draft to help ejection. Properly designed deep undercuts however are possible with GLS overmold compounds if an advancing core is used when the mold opens and the part does not have sharp corners and the elastomer is allowed to deflect as it is ejected.

2.3.1 Ergonomic design

The broad hardness range along with adjustments to the coefficients of friction (COF's) can be combined with a variety of surface textures to produce an individualized product feel. This can effect product's performance and/or customer appeal. Contact GLS for sample plaques to demonstrate these possibilities.

2.3.2 Color and Clarity:

GLS's overmolding compounds are available in opaque, translucent and clear grades. Clear grades can produce the best metallic or pearlescent colors. Filled opaque compounds are difficult to color in deep intense colors but will produce good pastel colors. The clarity of some GLS's overmold compounds approaches the clarity of silicone elastomers or PVC compounds.

2.3.3 Flow Length (Fl) and Wall Thickness (t)

The individual overmold grade selected and processing conditions determine the maximum flow length achievable. Spiral flow testing which has been traditionally used for thermoplastics, provides the processor with a comparative analysis of a material's ability to fill a part. Spiral flow testing of GLS materials has been conducted using injection velocities (3 & 5 in/sec). The flow lengths achieved by the various GLS product lines are given in Table 2.2. For information on specific grades and other details, contact the GLS Corporation. Special compounds have achieved up to 40 inches at an injection velocity of 5 in/s. These flow lengths translate to a flow length to thickness ratio (Fl/t) of 150-300. Under optimized process conditions this ratio can be as high as 400.

For applications requiring higher peel resistance, shorter flow lengths are advisable. Alternatively, mechanical interlocks must be used.

© 2002 GLS Corporation

*Table 2.2. Typical Flow lengths achievable with GLS compounds**

Series	Flow length, in	
	Injection velocity, 3 in/s	Injection velocity, 5 in/s
Dynaflex® D	13-15	18-20
Dynaflex® G	12-22	18-30
Versaflex™	9-16	13-26
Versalloy™	18-20	30-32

**Spiral Flow Tests performed on 0.0625 in thick, 0.375 in wide channel at 400°F*

2.3.4 Shrinkage, Warpage, Anisotropy

Most GLS SEBS based compounds have fairly high mold shrinkage between 0.013 and 0.025 in/in in the flow direction with less shrinkage in the cross flow direction. This can lead to the overmolding compound contracting more than the substrate after the part is ejected from the tool. This, in turn, can result in a warping or cupping of the substrate part, usually in the direction of flow of the overmolding material. This is especially true for long, thin parts or parts where the substrate is thinner than the overmold or if a low modulus substrate material is used. This can be partially counteracted by using higher modulus substrate materials and providing stiffening ribs in the substrate. Thinner coatings and the selection of a lower hardness overmold grade will also help. Relocating the gate, to affect the overmold flow pattern, may also be of assistance.

2.3.5 Shut-Off Designs

Shut-off's should be designed to:

1. Reduce the potential of peeling and provide a sharp transition between the TPE and the substrate.
2. Provide a distinct cavity for the TPE, which is capable of being vented.
3. Prevent the TPE from flashing over areas on the substrate.
4. Provide a 0.003" to 0.005" interference when using plastic inserts or substrates, to take into account shrinkage, sinks and tolerances.
5. Provide a spring-loaded area if the inserted substrate is metal or other non-compressible material.

As indicated in Figure 2.2 an accent groove of 0.015" to 0.030" depth and 0.030" to 0.040" width helps to develop a good shut-off. Due to the tolerance on metal and other non-compressible inserts, it is necessary to include Belleville disc springs, or high tension springs in the design to prevent flashing minimal thickness inserts and prevents crashing on oversized inserts. Shut-off designs to prevent peel are shown in Figure 2.3.

© 2002 GLS Corporation

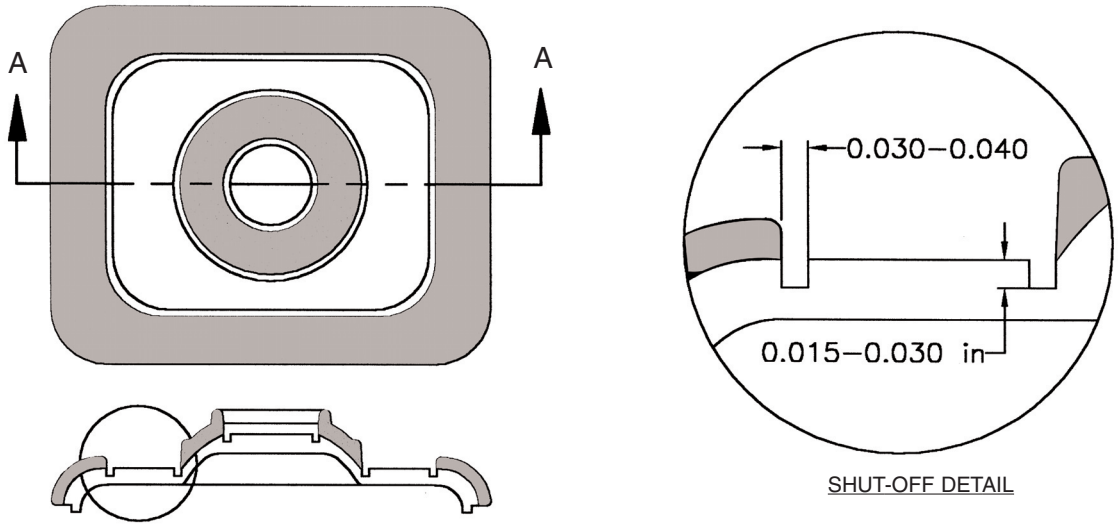

Figure 2.2. Shut-Off Designs To Prevent Flash.

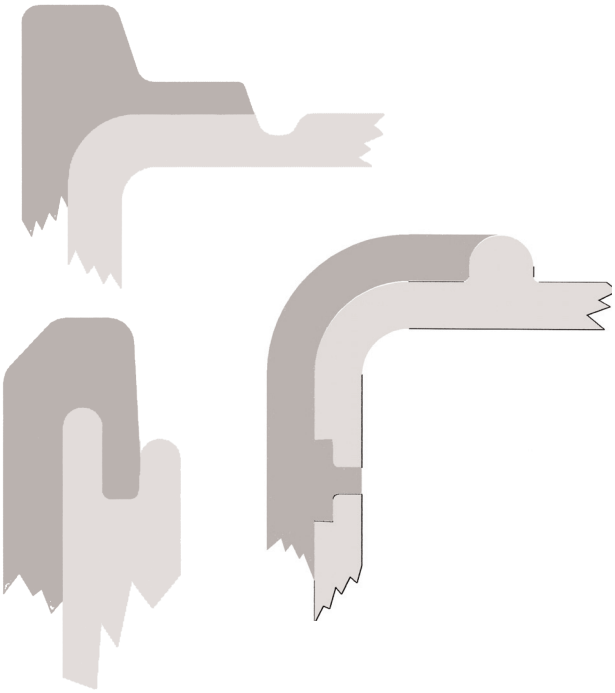

Figure 2.3. Shut-Off Designs to Reduce Peel.

© 2002 GLS Corporation

2.3.6 Mechanical Interlock Designs

Mechanical interlocks are used in overmolding to improve attachment to the substrate in areas subject to high stress or abrasion. Some designs for mechanical interlocks are shown in Figure 2.4.

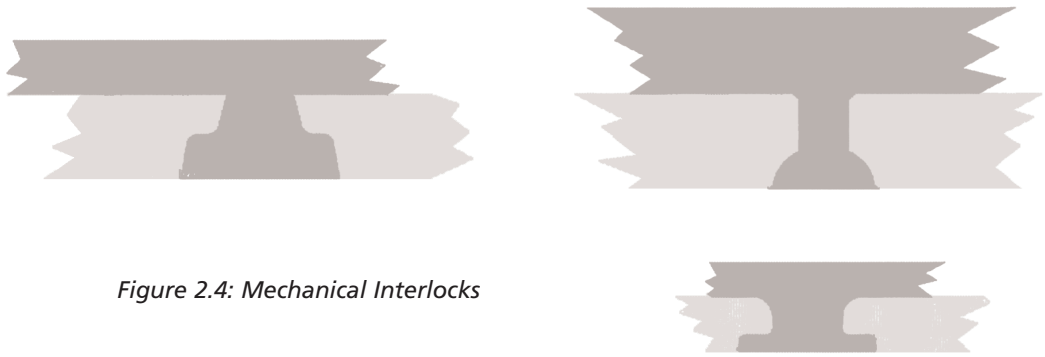

Figure 2.4: Mechanical Interlocks

2.3.7 Part Design for Specific Applications

2.3.7.1 Design of Overmolded Grips

The inherent high coefficient of friction of GLS compounds make them ideal for grips. Most people find a hardness of 40 to 50 Shore A gives them the best ergonomic feel. In addition to the hardness, the thickness of the grip also has an effect. A thickness in the range of 0.050" to 0.080" is required get the "soft-touch" feel. A thickness of over 0.125", using low durometer grade, is required to get the "squeeshy" feel. Surface texturing further helps obtain "grip-ability" and helps mask many small surface imperfections. "Grippy" co-extruded pen barrels may only have a 0.005 coating. Specialty compounds are available from GLS for grips in wet environments.

2.3.7.2 Design of Overmolded Seals

For hand held electronics, cameras, and other consumer products exposed to contact with water, the overmold may also provide a built in sealing element. The design of the seal will require a thickness to allow for the possible "out of flat" conditions and warpage of the substrate. It will also require the generation of a sealing force by the use of fasteners or snap fits between the halves of the assembly. The choice of the hardness to be selected and its thickness will depend on the rigidity of the substrate and the distance between the elements generating the sealing forces. The TPE overmold may be designed with a rounded sealing element above the surface on one side and seal against a flat surface on the other side of the product. The product may also be designed to have a groove or channel filled with TPE on one side and a rib on the hard part which impinges into the mating groove. The degree of protection desired will also influence the design. If underwater submergence is required, the inter-part sealing forces and interference must be higher. Underwater cameras with protection up to 30 feet (15 psi) have been successfully designed using simple snap fits. Higher differential pressures may require the use of fasteners to generate sufficient inter-part sealing forces. In general, higher hardness materials will resist higher pressures better. Many plumbing type valves have been designed to successfully seal up to 150 psi of water pressure.

© 2002 GLS Corporation

2.3.7.3 Design of Overmolded Vibration Isolators and Shock Absorbers

Consumer products that occasionally may be dropped can be partially protected by having a coating of TPE applied to their outsides. The required thickness should be thickest on the corners and smaller sides and thinner on the larger flat surfaces. The weight of the product, severity of the drop, as well as durability of the product to be protected, and the degree of protection desired will determine the specific design. For a drop of four feet onto a wood floor with a fairly durable product, an overmolding thickness of 0.250" on the corners and 0.125" on the smaller sides may be sufficient.

To isolate a product from vibration or prevent it from transmitting vibrations, a suspension or mounting system must be designed. The specific design is a function of the frequency of the vibration, as well as the product weight, and degree of attenuation desired. For high frequencies, a fairly thin coating of an elastomer trapped between the two rigid assemblies may be adequate. For lower frequencies, a thicker isolation element is required and a softer compound chosen. The design may also use an elastomeric element with open spaces trapped between the rigid elements to provide a non-linear spring rate.

2.3.7.4 Design of Over-molded Electrical Components

Styrenic Block TPEs are good insulators. Compounds are available from GLS which meet Underwriter Laboratory (UL) requirements. Contact with copper or copper containing alloys require the selection of specialty grades to prevent long-term deterioration.

2.3.7.5 Design of Over-molded Metal Insert Components

Section 1.2.2 and Figure 1.2 discuss briefly the over-molding of GLS compounds over metal inserts such as knife handles. Special consideration must be given in the design of the mold to account for the tolerances on the metal insert. Since the mold cannot compress the metal insert spring loaded lands for the seal off area are recommended. Special primers may be necessary to achieve proper adhesion. Stamped holes in the metal part can be designed to provide a mechanical interlock.

© 2002 GLS Corporation

The viscosity of GLS's overmolding compounds are shear dependent and should be considered when designing the molds and setting the process conditions. Both conventional and hot runner tool designs may be used for the GLS overmolding compounds. Self-insulating manifold hot runner tool designs are not recommended due to the potential for material degradation in the stagnation zones.

3.1 Mold Construction

GLS overmolding materials are generally non-abrasive and non-corrosive. The choice of tool steel will depend on the quantity and quality of parts to be produced and will be primarily determined by the type of rigid substrate being used in the application. If a reinforced substrate material is used a high hardness abrasion resistant steel will be required. For high volume production, the initial expense of quality tooling is a sound investment.

Most GLS materials replicate the mold surface fairly well. A polished mold is required to produce a glossy or good clarity surface. To produce a part with a matted appearance of a thermoset rubber, a rougher mold surface is required. In general, the rough surface produced when EDM the cavity will produce a good surface and good release from the mold. Vapor honing, sand or bead blasting and chemical etching may also used to produce surfaces with varying degrees of gloss and appearance. To aid in release, the cavity or core may be coated with a release coating such as PTFE impregnated nickel after it has been given a sand blast or EDM finish.

3.2 General Concepts to Mold Design

For multi-cavity tools, the layout should be physically balanced. In a balanced system, the molten material flows to each cavity at equal times under uniform pressure. Unbalanced runner may result in inconsistent part weights and dimensional variability. With the lower hardness GLS compounds, aggressive sprue pullers with undercuts are required. Vents are placed in the parting line at the last areas to fill or around ejector pins. Typical vents are 0.0005 to 0.001" deep, 0.080" to 0.120" wide and have a land of 0.120" to 0.240".

Proper support of the insert in the mold is required. If the insert is not properly supported it can deform due to the injection pressure. In extreme cases the insert will break or the melt will impinge through the insert. Flashing in certain areas of the tool can also result from the insert being moved in the mold. With two shot molding this is usually not a problem because the first short is automatically fully supported on the "B-half" of the tool.

3.3 Runner Configuration and Design

For conventional cold runner tools, full-round runners are best because they provide the least resistance to flow and minimize cooling in the runner. Cooling is minimized because full round runners have less surface area and therefore keep the material molten longer. The second most efficient runner cross-section is the modified trapezoid. This type of geometry most closely simulates a full round runner but only requires machining in only one plate. Figure 3.1 illustrates typical runner dimensions. Runner dimensions rarely exceed 0.300" even for the main runner. Cold slug wells should be used each time the runner makes a turn or divides.

© 2002 GLS Corporation

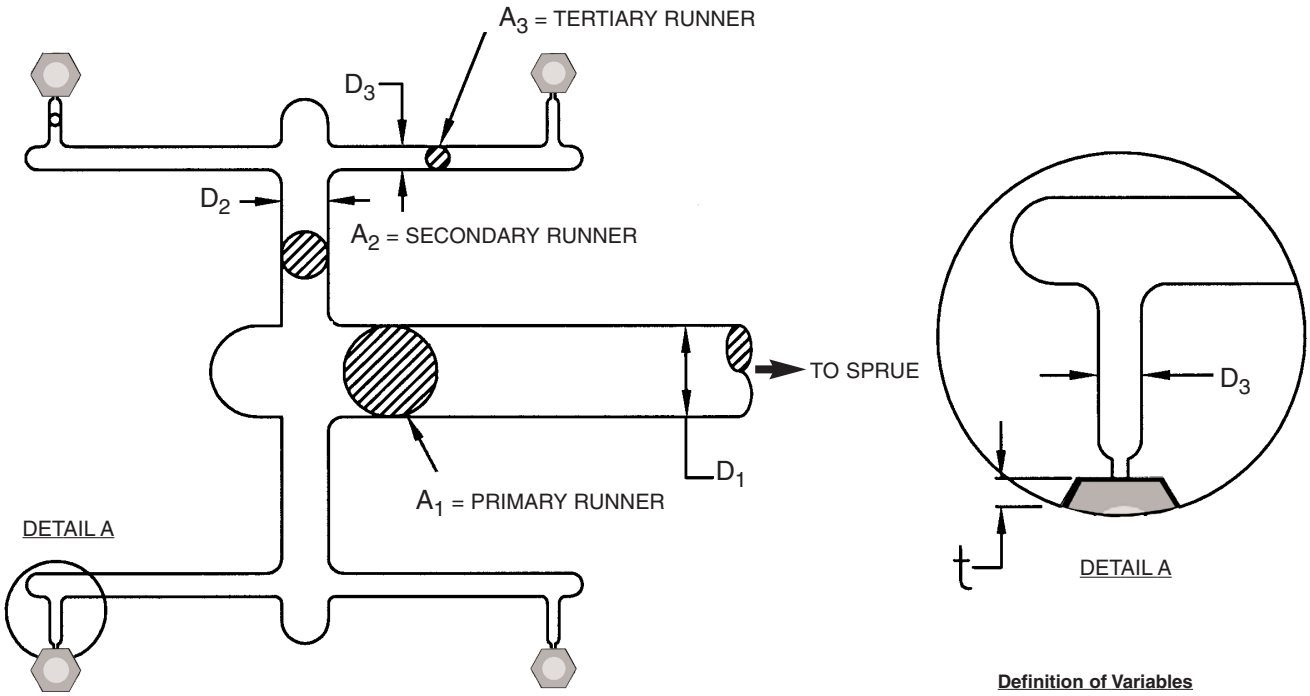

Definition of Variables

D_1, D_2, D_3 = Diameter of the Runners

A_1, A_2, A_3 = Cross Sectional Area of Runners

t = Thickness of the Part

Figure 3.1. Runner Design and size

Guidelines for TPE Runner Sizes

$D_3 = 1.0 - 1.2\ t$

$D_2 = 1.4\ D_3$

$D_1 = 1.4\ D_2$

3.4 Hot Runner Manifold Systems

The design should be naturally or geometrically balanced. Externally heated manifolds are best. Internally heated systems, which use torpedo heaters are not recommended because they have hot spots, stagnation zones and partially solidified material clinging to the walls. All passages should have highly polished circular cross sections with gentle bends to minimize the possibility of stagnation zones. To maintain fairly high shear, low residence times, and provide for self-clearing, the passages should have be .250 to .375 in. diameter. Individualized zone controls will allow for some balance adjustment and will improve part quality.

3.5 Gate Design and Location

All conventional gating types are suitable for processing GLS elastomers. The type of gate and the location, relative to the part, can affect the following:

- Part packing
- Gate removal or vestige
- Part cosmetic appearance
- Part dimensions including substrate warpage.

© 2002 GLS Corporation

The type of gating is dependent on both part and tool design. The gate location is equally important. To prevent the chances of jetting, locate the gate entrance in an area where the flow will impinge on a cavity wall. For automatically degating tools, the highly elastic nature of softer TPE's makes gate design (such as submarine gates or three plate tools with self-degating drops) more difficult. Higher hardness and filled grades usually have lower ultimate elongation and therefore are more easily degated. To assure the gates will break at a specific location, they should have a short land length to create a high stress concentration. Table 3.1 compares the different gate types.

Tab/Edge Gate

These types of gates (Figure 3.2) most commonly utilize a conventional sprue and cold runner system. They are located along the tool parting line. The part design may use a small undercut where the gate meets the part to minimize gate vestige protruding above the part surface. Advantages of edge gates are ease of fabrication, modification and maintenance. The gate depth (D) should be 15-30% of the wall thickness at the gate entrance. Common practice is to start "steel safe". A good starting point for the gate width should be 1-1.5 times the gate depth. The gate size is also depend on the part volume. The gate area in the mold may be inserted to facilitate gate maintenance or modification.

Submarine (Tunnel) Gate

Submarine or tunnel gates are self-degating i.e. during part ejection the molded part and runner are separated by the tool steel. Figure 3.3 shows a typical design of a submarine gate.

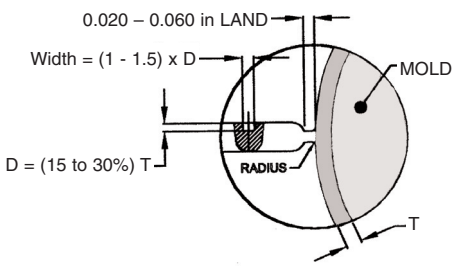

Figure 3.2 Tab or edge gate

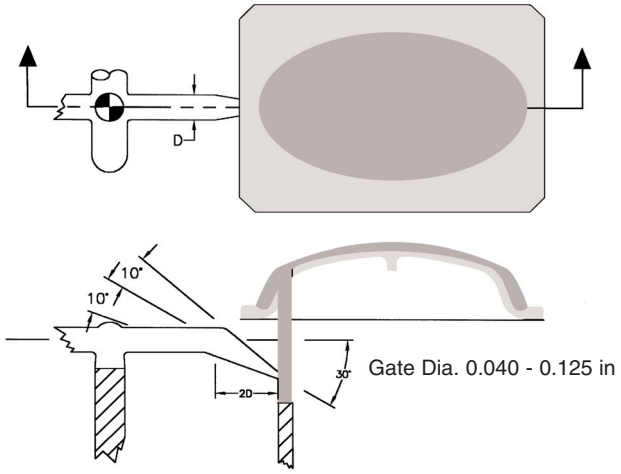

Figure 3.3 Submarine gate

Fan and Modified Fan Gate

A fan gate is a variation of a tab gate (Figure 3.4). The fan gate distributes material into the cavity more evenly. It is normally used in parts that require a high degree of flatness. The modified fan gate further reduces the effects of anisotropic shrinkage.

© 2002 GLS Corporation

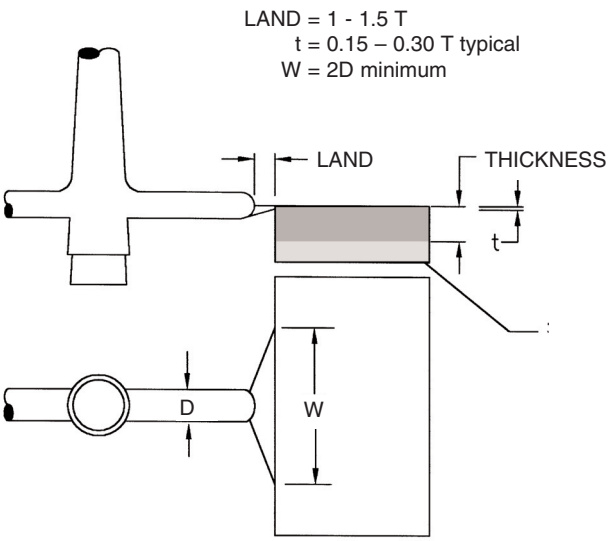

Figure 3.4. Design of a Fan gate

Sprue or Direct Gate

The sprue or direct gating is often used on prototype parts and the cavity is placed directly in line with the center of the sprue. This type of gating is not recommended for production tools or on aesthetic parts due to the potential for "cold-slugs" to be visible on the part surface. The sprue will also need to be manually trimmed. If this type of gate is desired, attempt to keep both the sprue length and diameter as short and as small as possible.

Diaphragm Gate

This type of gate is used for hollow round parts to maintain concentricity. It allows even flow into the cavity and minimizes the potential for knit lines. A ring gate may be used on the outside of a circular part.

Valve Gates

For hot runner tools, valve gates are recommended for high volumes and appearance of parts. They leave only a barely visible ring. The gate can be located below the part surface or hidden in the part detail. Dependent on the size and thickness of the part, the gate diameter should be 0.030" to 0.125". The material in the valve stays liquid so the valve can be closed. The material in the part is not required to freeze before the valve is closed. Screw recovery can be started immediately after the valve is closed which will help reduce the overall cycle time. For very thick wall parts, with the potential for sinks or shrink voids, the valves are held open longer to supply make-up material. Valve gate elements need to be insulated from the mold plates to maintain proper temperature control. Due to the low viscosity of some GLS overmold grades, the pins need to be tight to prevent valve leakage or hair flash. Individual heater controls at each gate allow for finer control of the melt temperature and viscosity as well as filling.

© 2002 GLS Corporation

Gate Type	Advantage	Disadvantage
Edge/Tab/Pin Gate	• Appropriate for Flat Parts • Easy to machine and modify	• Post-Mold gate/runner removal • Larger gate vestige
Submarine Gate	• Auto gate removal • Minimal gate vestige	• More difficult to machine • More difficult to extract
Back gating through a pin and hole in substrate	• No gate vestige on front side of part	• More complex • Post mold trimming • Potential surface sink
Diaphragm gate	• Concentricity • Appropriate for round parts • No knit lines	• Post molding gate/ runner removal • Scrap
Pin gate (3-plate)	• Auto gate removal • Minimal gate vestige • Localized cooling	• Requires floater plate • More scrap • Higher tool cost
Valve gate (Hot runner systems)	• Minimal gate vestige • Positive shut off • Minimizes post pack	• High tool cost • Higher maintenance

Table 3.1 Advantages and Disadvantages of various gate types.

Gate Location

Many of GLS's compounds are anisotropic. They have different physical properties in the flow direction and 90° to the flow. Depending on the product's intended usage, these differences may or may not be important. The material flow may be estimated by eye or by using flow analysis programs. For higher shrinkage grades, the part may shrink around the gate, which causes "gate "pucker" if there is a high molded in stress at the gate. Handle grip shaped parts may warp toward the gate side of the part. Locating the gate at the top of the part minimizes this problem. Using two gates on opposite sides of the part can minimize this problem but will result in two knit lines. If filling problems exist in thin walled parts, the flow can be altered, by adding flow channels or minor changes in wall thickness. In some cases, it may be necessary to add a second gate to properly pack the parts.

RECOMMENDED GATE LOCATIONS:

- At the heaviest cross section, to permit part packing and minimize voids and sink.
- To ensure a flow path that will yield the best adhesion.
- To minimize obstructions (flowing around cores or pins) in the flow path.
- To minimize jetting.
- Where potential residual molded in stress around the gate will not affect part function or aesthetics.
- To minimize flow marks in cosmetic areas.
- To minimize potential knit lines.
- To allow easy manual or automatic degating.
- To minimize flow path length.

© 2002 GLS Corporation

CHAPTER 4 OVERMOLDING: PROCESSING CONSIDERATIONS

4.1 Machine Selection

Molding machines with reciprocating screws machines are recommended. Newer computer controlled machines have the ability to better control the molding parameters and are preferred for multi-cavity tools and high production usage. Machines with the programmable injection rates and pressures can produce better quality parts. Machines that control the shot size by position are preferable to machines that only control the process by pressure and/or time.

The clamp capacity necessary for general purpose GLS compounds is 1.5 - 3 tons per square inch times the total projected area of the cavities plus the runner system. This is lower than most other TPE's. If possible, use a machine, which utilizes 25 to 75% of the barrel shot size capacity. This results in better temperature control of the material and minimizes material residence time at high temperature. The typical material residence time for GLS overmolding compounds should be no more than 8-10 minutes. In most TPE two shot molding applications the required TPE shot size is considerably smaller than the substrate. If available, use an injection unit sized to minimize the material residence time.

Start with a small nozzle orifice. A smaller nozzle diameter will help to produce shear heating during injection and generate less cold slug material. Suggested starting diameters are [1/16Ø - 0.0625 in. (1.59mm) to 3/16Ø - 0.1875 in (4.76mm)]. General-purpose (GP) screws may be utilized. Compression ratios of 2.0 to 3.0: 1 are commonly used for GLS overmolding compounds.

4.2 Material Handling and Preparation

4.2.1 Drying

Drying is required for some specialty GLS overmolding products. Desiccant or vacuum dryers are recommended. Refer to the individual Product Technical Data Sheet for specific recommendations. For grades which require drying a moisture level of below 0.1% is recommended. Typical drying times are 3hrs at 130-150°F. The moisture level of both the overmold grade as well as the substrate can adversely affect adhesion.

4.2.2 Coloring

The color masterbatch carrier should be compatible with the overmold grade selected. For many GLS overmolding grades, the use of a polyethylene (PE) carrier may adversely effect adhesion. High concentration of waxes in the color concentrate can also decrease adhesion. The most commonly GLS recommended color concentrates are based on polypropylene (PP) and thermoplastic polyurethane (TPU). For a specific overmolding grade, follow the color carrier recommendations on the individual Technical Data Sheets. To make dispersion easier the color concentrate should have slightly lower viscosity (higher MFI) than the base TPE compound.

© 2002 GLS Corporation

4.2.3 Regrind

Regrind is not an option for many two material applications. Up to 20%, regrind may be used if there is clean under graded TPE scrap generated during the process. Higher levels of regrind are tolerated in black materials. Natural products, light colored or clear compounds may show contamination or discoloration unless properly controlled. Organic pigments used to produce yellow, red, blue and green colors are more likely to burnout or lighten after prolonged residence time or high regrind utilization. When possible use consistent regrind levels.

4.2.4 Purging

If the press is down for more than 10 minutes, purge it before restarting production. To prevent flashing, restart the machine using a reduced shot size and gradually increase it to the previous setting.

4.3 Overmolding Process Conditions

4.3.1 Injection Pressure and Injection Speed

Typically, the required or achieved injection pressures are from 200-600 psi. To achieve the benefits of shear thinning the injection speed should be adjusted to fill the mold in 1-3 seconds.

4.3.2 Melt Temperature

To achieve optimal bond strength, higher than normal melt temperatures are often required. In some critical applications, this temperature can be close to the upper processing temperature limits for the TPE. Melt temperatures of 400-460°F are common. Refer to a GLS Technical Datasheet for grade chosen to determine barrel temperature settings. In order to reduce the residence time at high temperature, reduce the temperatures in the rear of the injection unit as much as possible and only keep the last zone and nozzle at the high processing temperature.

4.3.3 Substrate Temperature

Better bonding can be achieved if the substrate temperature is elevated. For Insert Molding, pre-heating the insert may improve the bond strength. Pre-heating can also reduce any surface moisture present on the substrate and thereby improve adhesion.

For two shot molding, the time between the first and second shots should be kept as short as possible to achieve the best bond. However it must be long enough for the substrate to develop sufficient properties to resist the injections pressures and not be remelted or distorted by the second shot. The total overall cycle time is dictated by the thickest wall sections and material plus the time to rotate the mold and to load any inserts.

© 2002 GLS Corporation

4.3.4 Mold Temperature

To prevent mold from sweating and the resultant water contamination in the cavity, the mold temperatures should be set above the dew point temperature in the molding area. Mold temperatures may have to be raised if there are long or thin sections of the part, which can not be filled by changing other molding parameters. Mold temperatures of 70-120°F are typical. When using lifter bar ejection systems, differential thermal expansion of the mold may cause the lifter to jam. Therefore, accurate mold temperature is critical when running molds with core lifters. SEBS compounds release from cool surfaces better than hot. It is common practice to use two mold temperature controllers while running GLS materials. If sticking in the A half of the tool is a problem, reduce its temperature to see if it will help.

4.3.5 Cooling Time

The required cooling time is dependent on the temperature of the melt, the wall thickness of the part and the quantity of cooling available. Harder grades will set up faster than softer grades and are easier to eject. Overmolded parts will take longer to cool because the TPE is only cooled from one side as the plastic substrate has poor thermal conductivity. The cooling time for overmolded parts will be approximately 35 to 40 seconds for every 0.100 inches of overmold wall thickness.

4.4 Summary - Factors affecting Adhesion

To summarize, adhesion may be affected by:

- Grade of the substrate (glass filled, mineral filled, heat stabilized, lubricated)
- Type of color concentrate
- Moisture level in the overmold and substrate
- Level of regrind
- Substrate preparation/ pre-heating
- Cleanliness
- Process conditions (melt temperature, pressure, injection speed, cooling time)
- Mold and part design.

© 2002 GLS Corporation

4.5 Trouble shooting for Overmolding

The most common problems encountered in overmolding are poor adhesion, incomplete filling of the substrate or overmold and flashing of the overmold. Table 4.1 lists some common problems encountered in overmolding.

Table 4.1. Troubleshooting for Overmolding

Observation	Possible Causes	Corrective Actions
Flash (over substrate or on periphery of part.)	• Poor mold fit • Inadequate molding machine tonnage • Poor shutoff design • Substrate shrinkage	• Check by bluing the tool • Increase tonnage or decrease injection and pack pressure. • Recut tool to obtain complete shutoff • Check for substrate sinks and recut tool.
Shorts	• Not enough material • Not enough injection pressure • Not enough fill speed • Melt too cold • Poor venting	• Increase shot size • Increase injection pressure. • Increase injection speed • Increase melt temperature • Decrease the clamp tonnage and recut vents.
Poor quality knit lines	• Gas trapped between polymer fronts • Low melt temperature	• Improve vents • Increase injection speed and melt/mold temperature.
Overmold breaks/ impinges through hollow substrate	• Improperly supported substrate • High injection pressure and melt temperature • Wrong location of gate	• Fully support the substrate to resist hydraulic injection pressures and melting • Lower injection pressure and melt temperature • Relocate gate

© 2002 GLS Corporation

Table 4.1. Troubleshooting for overmolding, continued

Observation	Possible Causes	Corrective Actions
Warped parts	• Post mold shrinkage	• Lower the molded in stress in both the substrate and elastomer. • Increase the stiffness of the substrate by including glass or increasing thickness or ribs.
Poor adhesion	• Incompatible materials • Contamination • Inadequate material temperature	• Reselect correct grade of TPE • Check for color concentrate compatibility and or the use of a lubricated grade of substrate. • Increase the process temperatures and/or mold temperature.
Surface sinks	• Material shrinkage causes non-uniform release from tool surface. • Gate freeze off too early	• Increase the pack pressure/hold time and decrease material temperature. • Increase gate size
Non-uniform color	• Incompatible color concentrate • Inadequate melting and dispersion of color concentrate.	• Check for concentrate compatibility. • Increase rear zone temperature/back pressure/screw RPM
Surface splaying (silver streaking)	• Moisture in TPE	• Dry materials properly
Parts stick in the "A" side of the tool	• Not enough draft • Part forms a vacuum in the "A" cavity. • "A" cavity too shinny • "A" cavity too hot	• Increase the draft • Provide air assist release. • Sandblast the cavity. • Run "A" half cooler.
Elastomer sticky or smells	• Material degradation	• Check for material residence time and reduce temperature in rear zones if possible

© 2002 GLS Corporation

© 2002 GLS Corporation

Realize The Potential

TPE Technology

GLS CORPORATION

Feel the difference®

VERSAlloy® Elastomer Alloys

DYNAflex® TPE Compounds

VERSAflex® Alloys

VERSollan™ Elastomer Alloys

If you would like to learn more about GLS, or how GLS TPEs can add value to your product, call the GLS technical support team for consultation.

800-457-8777 toll free

815-385-8500 bell

815-385-8533 fax

www.glscorp.com

info@glscorp.com e-mail

833 Ridgeview Drive

McHenry, IL 60050

Note: No warranties, expressed or implied, including patent warranties, or warranties of merchantability or fitness for use are made with respect to product or information described above. The properties given in this guide are typical properties, and as such are dependent on molding conditions.

DYNAFLEX® is a registered trademark of GLS Corporation; KRATON is a registered trademark of Kraton Polymers U.S. LLC.
VERSAFLEX® is a registered trademark of GLS Corporation; VERSALLOY® is a registered trademark of GLS Corporation.
VERSOLLAN® is a registered trademark of GLS Corporation.
VERSALLOY® is a DSM-GLS alliance product.
VERSOLLAN™ contains BASF Corporation high performance thermoplastic polyurethane (TPU).
Realize the Potential Feel the Difference® is a registered trademark of GLS Corporation.

Voltage, LLC
EX1015-25

© 2002 GLS Corporation

Version 11/19/02