US010347775B2

(12) **United States Patent**
Solon

(10) **Patent No.: US 10,347,775 B2**
(45) **Date of Patent: Jul. 9, 2019**

(54) **SOLAR ARRAY RECOMBINER BOX WITH WIRELESS MONITORING CAPABILITY**

(75) Inventor: **Dean Solon**, Gallatin, TN (US)

(73) Assignee: **SHOALS TECHNOLOGIES GROUP, LLC**, Portland, TN (US)

(*) Notice: Subject to any disclaimer, the term of this patent is extended or adjusted under 35 U.S.C. 154(b) by 293 days.

(21) Appl. No.: **12/871,234**

(22) Filed: **Aug. 30, 2010**

(65) **Prior Publication Data**

US 2012/0048328 A1 Mar. 1, 2012

(51) **Int. Cl.**
G01D 4/00 (2006.01)
H01L 31/02 (2006.01)
H02S 50/10 (2014.01)

(52) **U.S. Cl.**
CPC ***H01L 31/02021*** (2013.01); ***G01D 4/002*** (2013.01); ***H02S 50/10*** (2014.12); *H01L 2924/0002* (2013.01); *Y02B 70/346* (2013.01); *Y02B 90/241* (2013.01); *Y02E 10/50* (2013.01); *Y04S 20/32* (2013.01); *Y04S 20/525* (2013.01)

(58) **Field of Classification Search**
CPC G01R 31/405; G01R 31/2605; H01H 50/042; H01L 31/02021; H01L 2924/0002; H02S 50/10; Y02B 70/346; Y04S 20/23; Y04S 20/525; G01D 4/002
USPC 310/49.13
See application file for complete search history.

(56) **References Cited**

U.S. PATENT DOCUMENTS

4,287,382 A 1/1981 French
4,257,087 A * 3/1981 Cuk 363/16
4,490,668 A * 12/1984 Sterzer ..... 322/2 R
4,692,754 A * 9/1987 Edejer et al. 340/671
4,894,764 A * 1/1990 Meyer et al. 363/65
5,573,200 A 11/1996 Sato et al.
6,437,700 B1 * 8/2002 Herzfeld et al. 340/650
7,602,080 B1 * 10/2009 Hadar et al. 307/20
2006/0027677 A1 2/2006 Abts
2006/0237058 A1 * 10/2006 McClintock et al. 136/244
2007/0239481 A1 * 10/2007 DiSilvestro et al. 705/2
2008/0144294 A1 * 6/2008 Adest H05K 7/1432 361/730
2008/0147335 A1 * 6/2008 Adest et al. 702/64
2008/0264474 A1 * 10/2008 Frauenknecht et al. 136/251
2009/0012917 A1 * 1/2009 Thompson G06Q 50/06 705/412
2009/0159113 A1 * 6/2009 Morimoto 136/244
2009/0207543 A1 * 8/2009 Boniface et al. 361/86
2009/0302831 A1 12/2009 Adams et al.
2010/0085670 A1 4/2010 Palaniswami et al.
2010/0116325 A1 * 5/2010 Nikoonahad 136/251
2010/0126550 A1 * 5/2010 Foss G05F 1/67 136/244
2011/0050218 A1 * 3/2011 Lohss G01R 33/072 324/251

(Continued)

Primary Examiner — Susan D Leong
Assistant Examiner — William E McClain
(74) *Attorney, Agent, or Firm* — Carla Gannon Law

(57) **ABSTRACT**

A system for monitoring and wirelessly transmitting solar array parameters such as current, voltage and temperature in real time is primarily housed within a recombiner box. The system lends itself to retrofitting within some commercially available recombiner boxes. Signals emitted from the RF controller component of the system are received by a central processor, which includes a dashboard interface. Multiple systems in proximity can be linked to form a mesh network with one central processor.

14 Claims, 16 Drawing Sheets

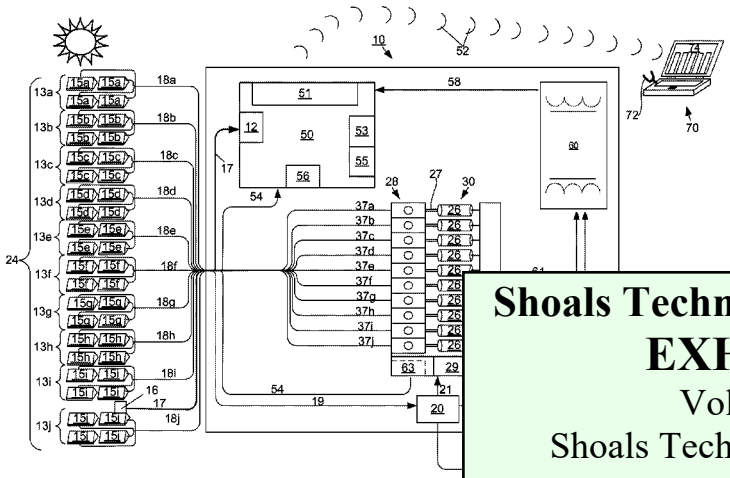

Shoals Technologies Group, LLC.
EXHIBIT 2004
Voltage, LLC v.
Shoals Technologies Group, LLC
IPR2024-00877

US010347775B2

(12) **United States Patent**
Solon

(10) **Patent No.: US 10,347,775 B2**
(45) **Date of Patent: Jul. 9, 2019**

(54) **SOLAR ARRAY RECOMBINER BOX WITH WIRELESS MONITORING CAPABILITY**

(75) Inventor: **Dean Solon**, Gallatin, TN (US)

(73) Assignee: **SHOALS TECHNOLOGIES GROUP, LLC**, Portland, TN (US)

(*) Notice: Subject to any disclaimer, the term of this patent is extended or adjusted under 35 U.S.C. 154(b) by 293 days.

(21) Appl. No.: **12/871,234**

(22) Filed: **Aug. 30, 2010**

(65) **Prior Publication Data**

US 2012/0048328 A1 Mar. 1, 2012

(51) **Int. Cl.**

G01D 4/00 (2006.01)
H01L 31/02 (2006.01)
H02S 50/10 (2014.01)

(52) **U.S. Cl.**

CPC ***H01L 31/02021*** (2013.01); ***G01D 4/002*** (2013.01); ***H02S 50/10*** (2014.12); *H01L 2924/0002* (2013.01); *Y02B 70/346* (2013.01); *Y02B 90/241* (2013.01); *Y02E 10/50* (2013.01); *Y04S 20/32* (2013.01); *Y04S 20/525* (2013.01)

(58) **Field of Classification Search**

CPC G01R 31/405; G01R 31/2605; H01H 50/042; H01L 31/02021; H01L 2924/0002; H02S 50/10; Y02B 70/346; Y04S 20/23; Y04S 20/525; G01D 4/002

USPC 310/49.13

See application file for complete search history.

(56) **References Cited**

U.S. PATENT DOCUMENTS

4,287,382 A 1/1981 French
4,257,087 A * 3/1981 Cuk 363/16
4,490,668 A * 12/1984 Sterzer ..... 322/2 R
4,692,754 A * 9/1987 Edejer et al. 340/671
4,894,764 A * 1/1990 Meyer et al. 363/65
5,573,200 A 11/1996 Sato et al.
6,437,700 B1 * 8/2002 Herzfeld et al. 340/650
7,602,080 B1 * 10/2009 Hadar et al. 307/20
2006/0027677 A1 2/2006 Abts
2006/0237058 A1 * 10/2006 McClintock et al. 136/244
2007/0239481 A1 * 10/2007 DiSilvestro et al. 705/2
2008/0144294 A1 * 6/2008 Adest H05K 7/1432 361/730
2008/0147335 A1 * 6/2008 Adest et al. 702/64
2008/0264474 A1 * 10/2008 Frauenknecht et al. 136/251
2009/0012917 A1 * 1/2009 Thompson G06Q 50/06 705/412
2009/0159113 A1 * 6/2009 Morimoto 136/244
2009/0207543 A1 * 8/2009 Boniface et al. 361/86
2009/0302831 A1 12/2009 Adams et al.
2010/0085670 A1 4/2010 Palaniswami et al.
2010/0116325 A1 * 5/2010 Nikoonahad 136/251
2010/0126550 A1 * 5/2010 Foss G05F 1/67 136/244
2011/0050218 A1 * 3/2011 Lohss G01R 33/072 324/251

(Continued)

Primary Examiner — Susan D Leong
Assistant Examiner — William E McClain
(74) *Attorney, Agent, or Firm* — Carla Gannon Law

(57) **ABSTRACT**

A system for monitoring and wirelessly transmitting solar array parameters such as current, voltage and temperature in real time is primarily housed within a recombiner box. The system lends itself to retrofitting within some commercially available recombiner boxes. Signals emitted from the RF controller component of the system are received by a central processor, which includes a dashboard interface. Multiple systems in proximity can be linked to form a mesh network with one central processor.

14 Claims, 16 Drawing Sheets

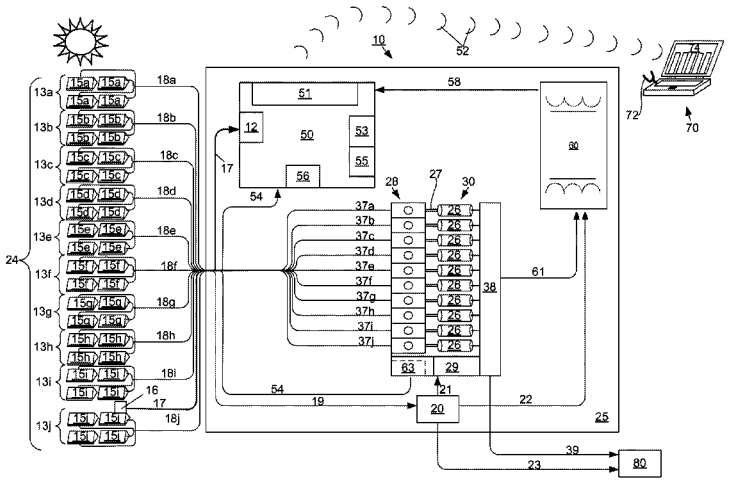

(56) **References Cited**

U.S. PATENT DOCUMENTS

2011/0058337	A1*	3/2011	Han et al.	361/717
2011/0121984	A1*	5/2011	Schripsema	H01L 31/02021 340/635
2012/0049855	A1*	3/2012	Crites	H01L 31/02021 324/537

* cited by examiner

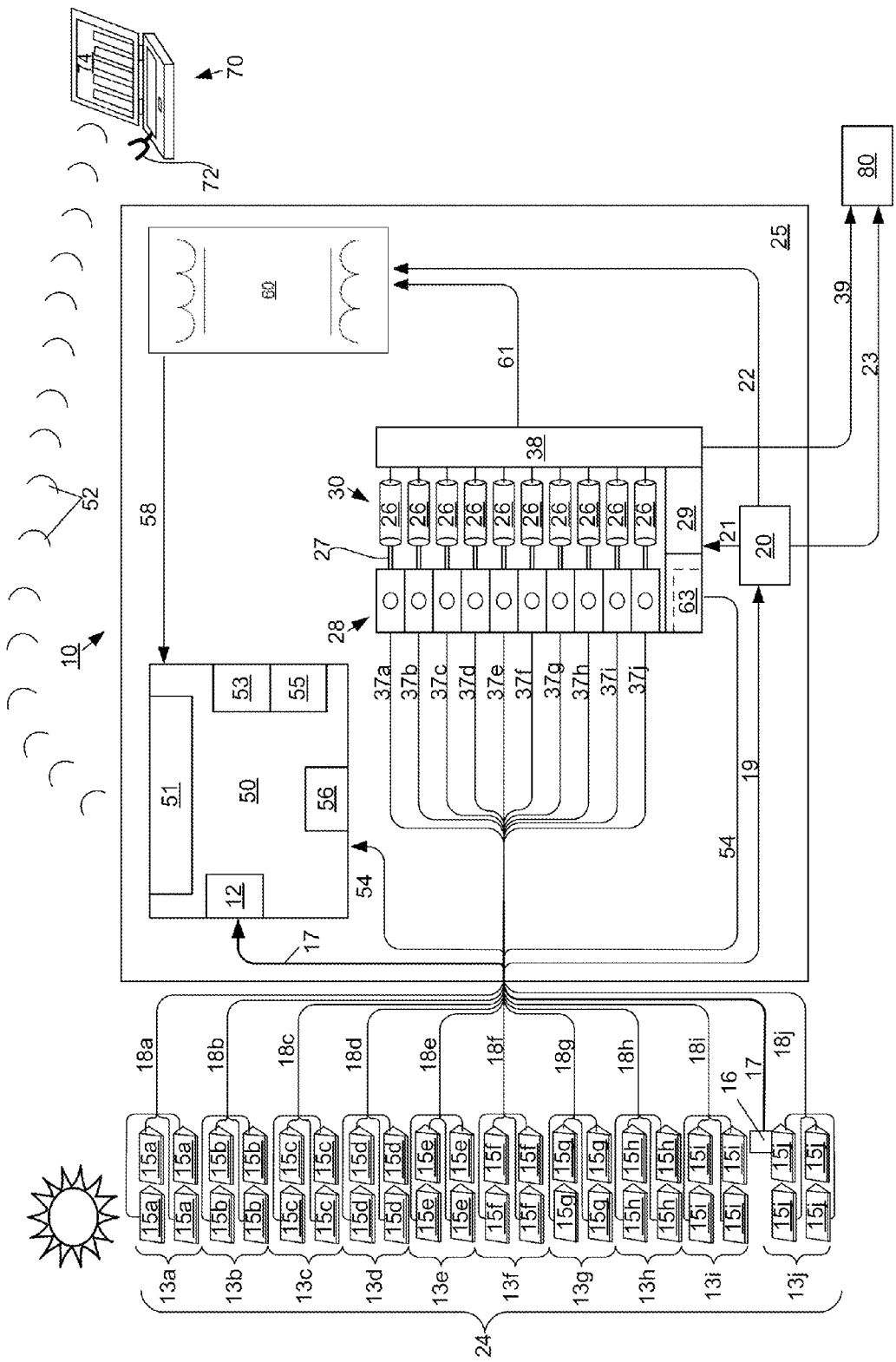
10
12
13a
13b
13c
13d
13e
13f
13g
13h
13i
13j
15a
15b
15c
15d
15e
15f
15g
15h
15i
16
17
18a
18b
18c
18d
18e
18f
18g
18h
18i
18j
19
20
21
22
23
24
25
26
27
28
29
30
37a
37b
37c
37d
37e
37f
37g
37h
37i
37j
38
39
50
51
52
53
54
55
56
58
60
61
63
70
72
74
80

FIG. 1

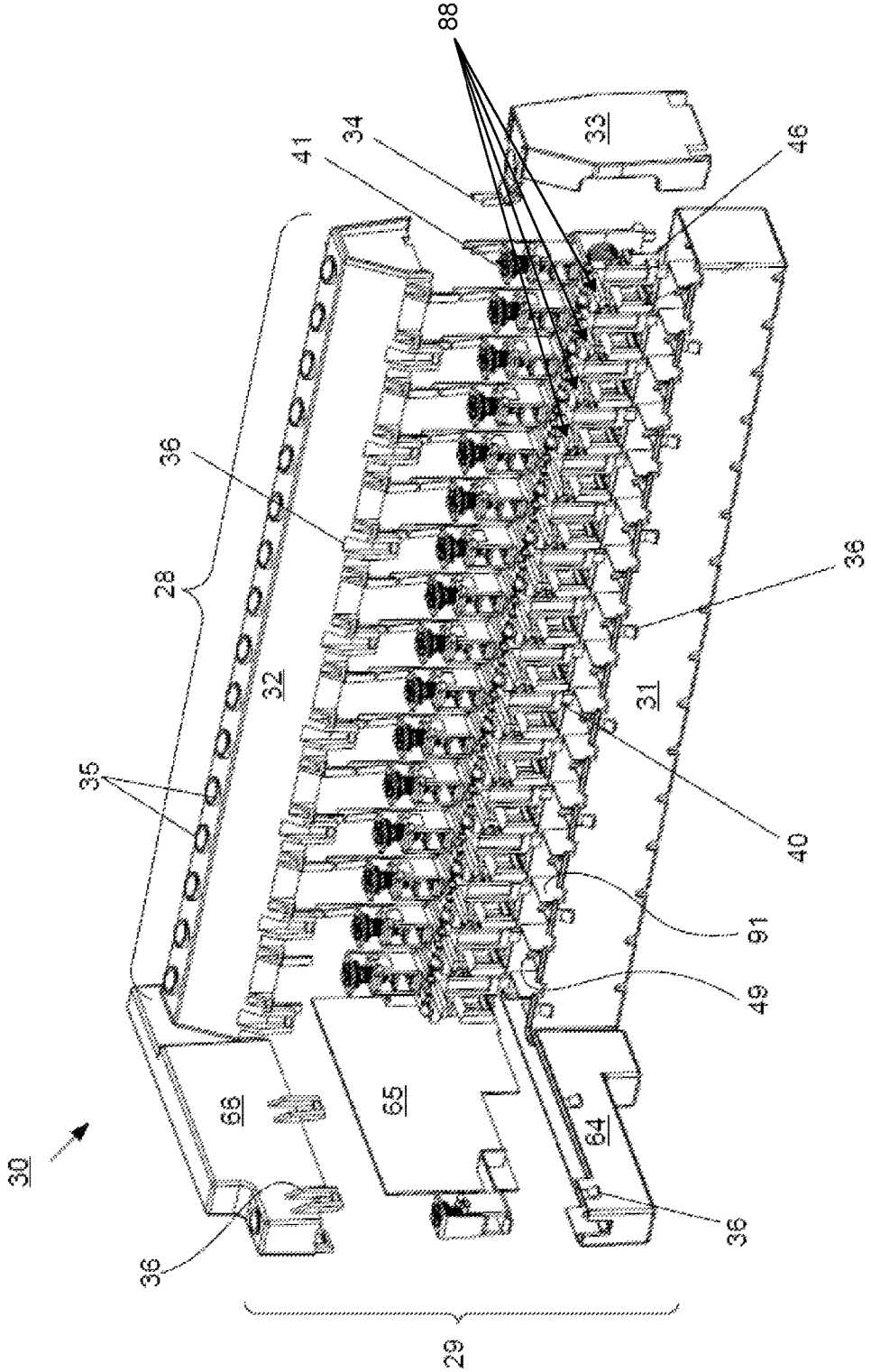

FIG. 2

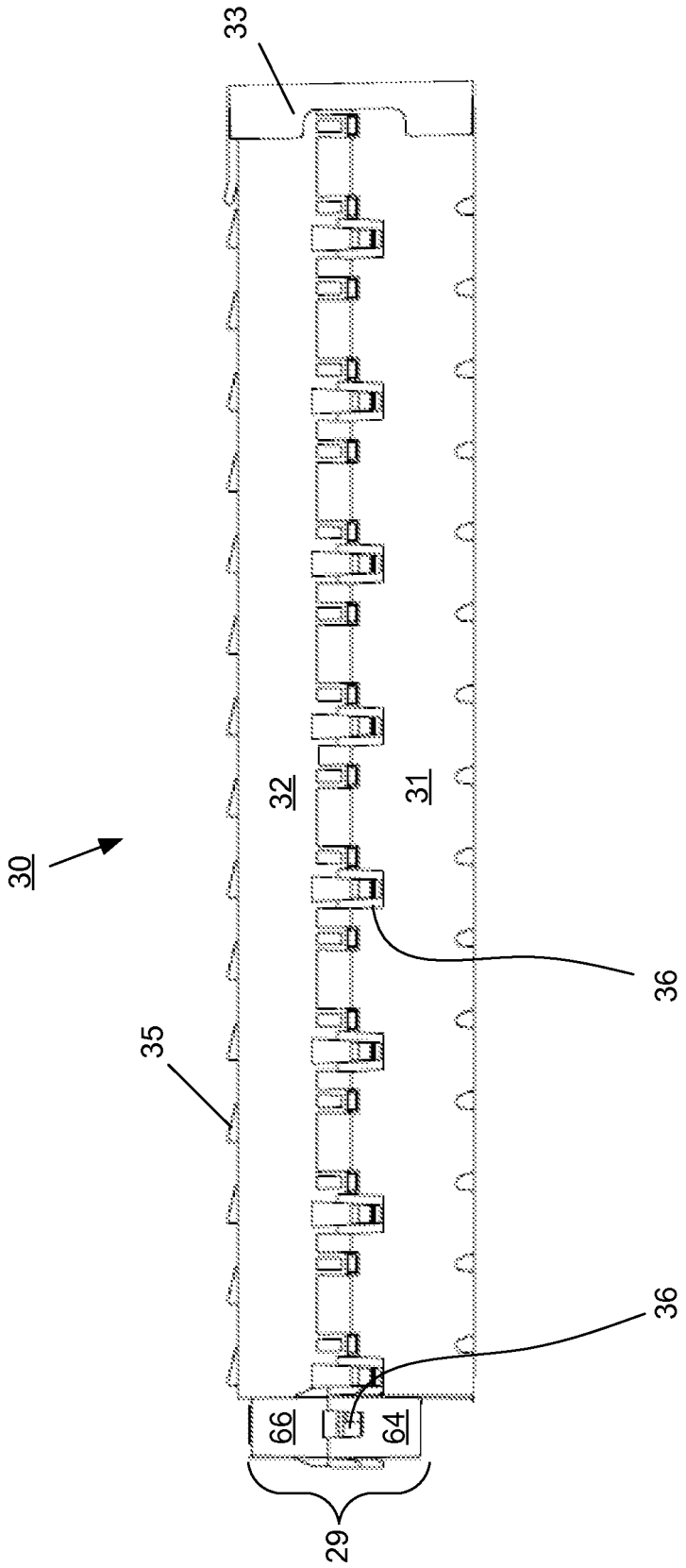

FIG. 3

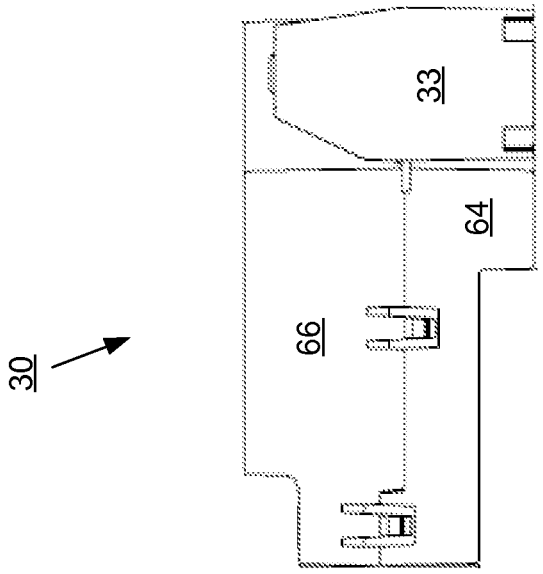

FIG. 4

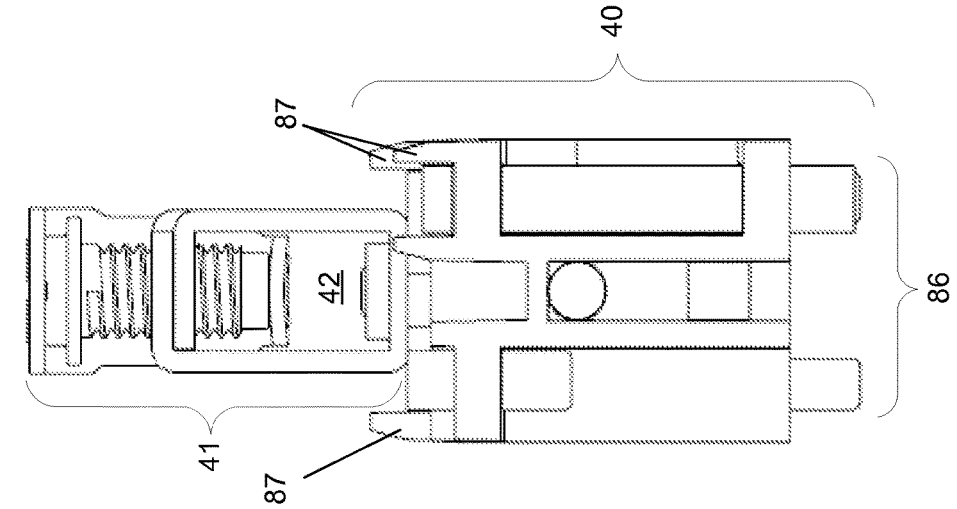

FIG. 6

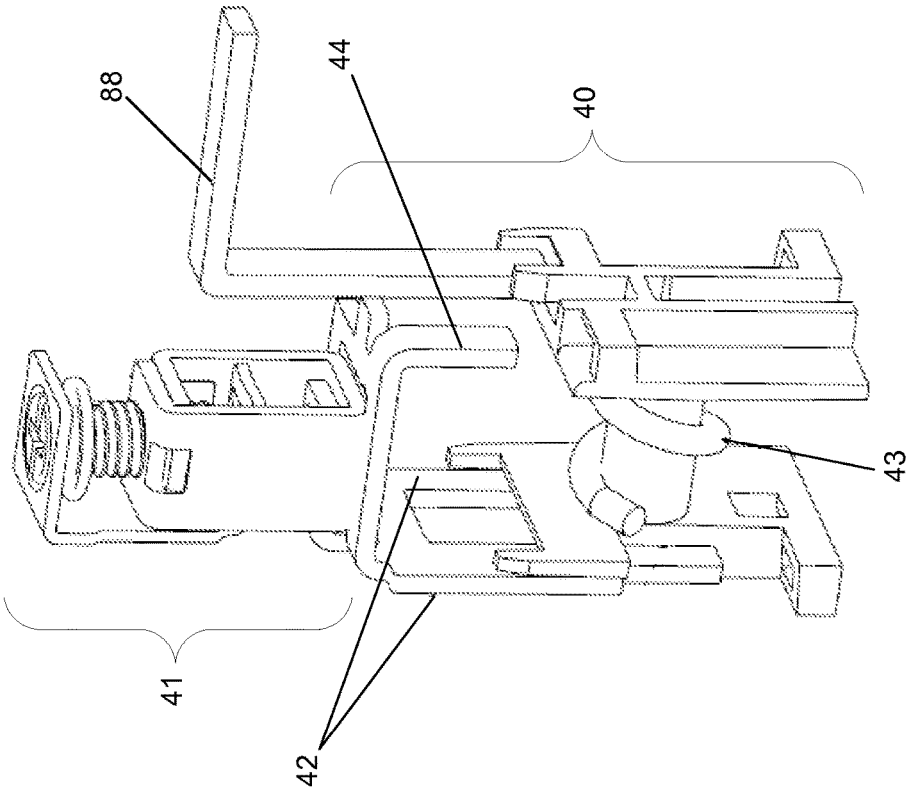

FIG. 5

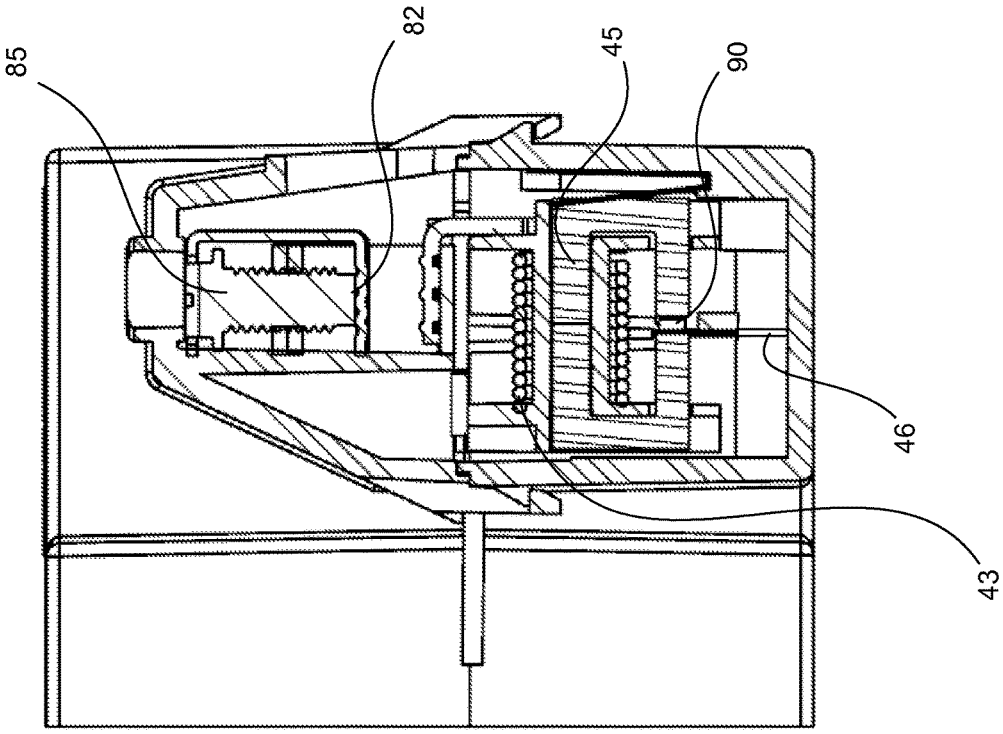

FIG. 8

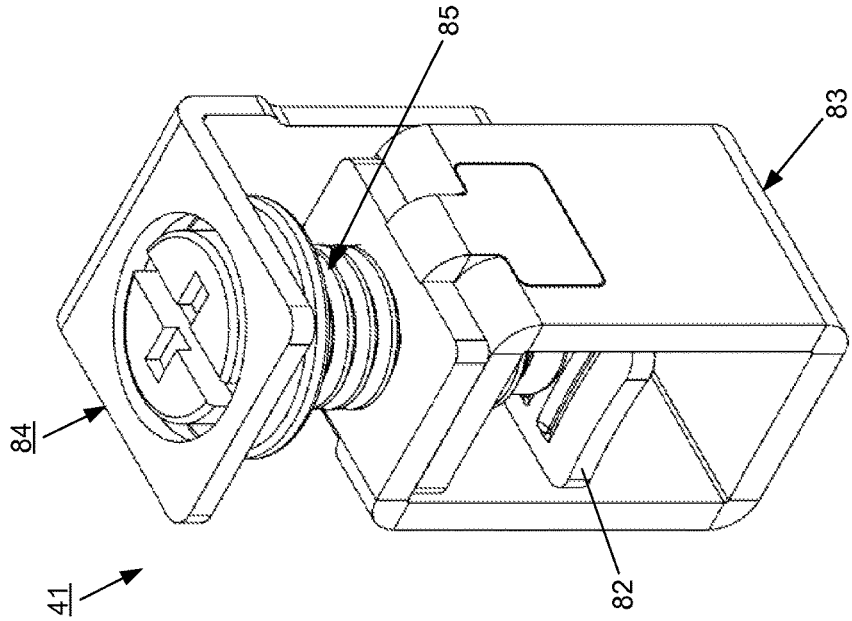

FIG. 7

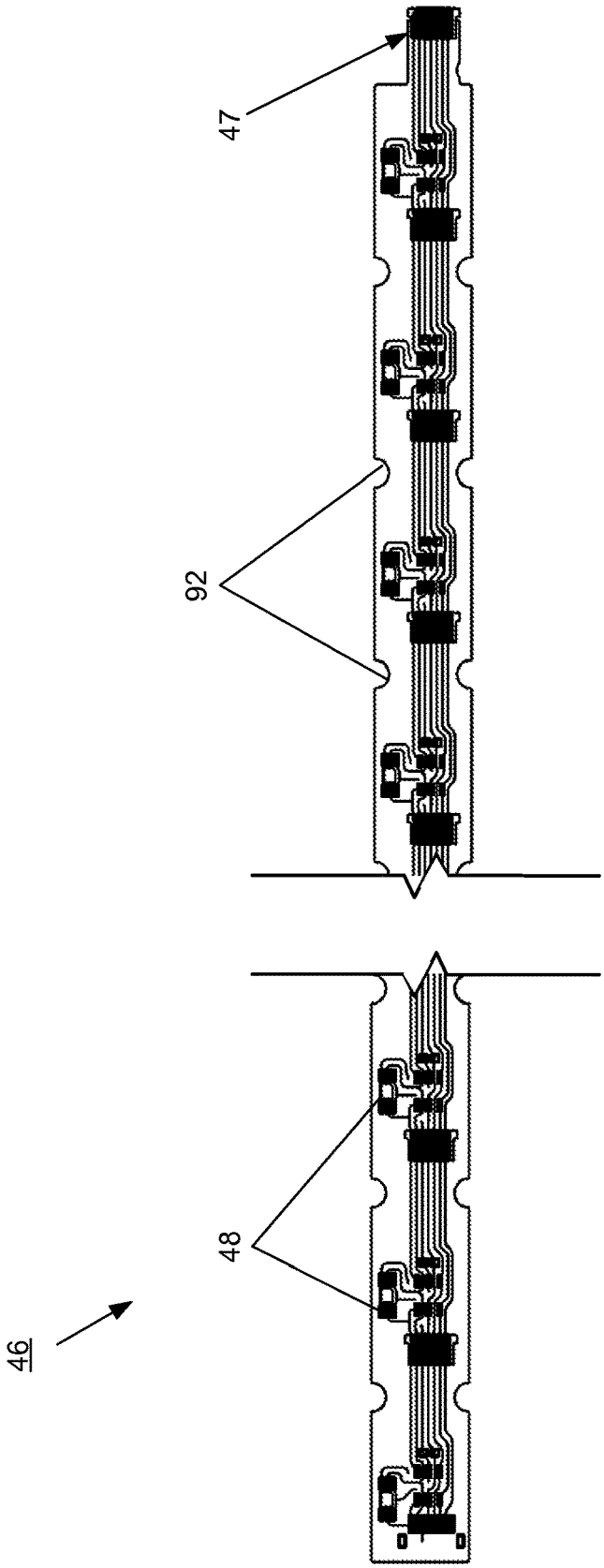

FIG. 9

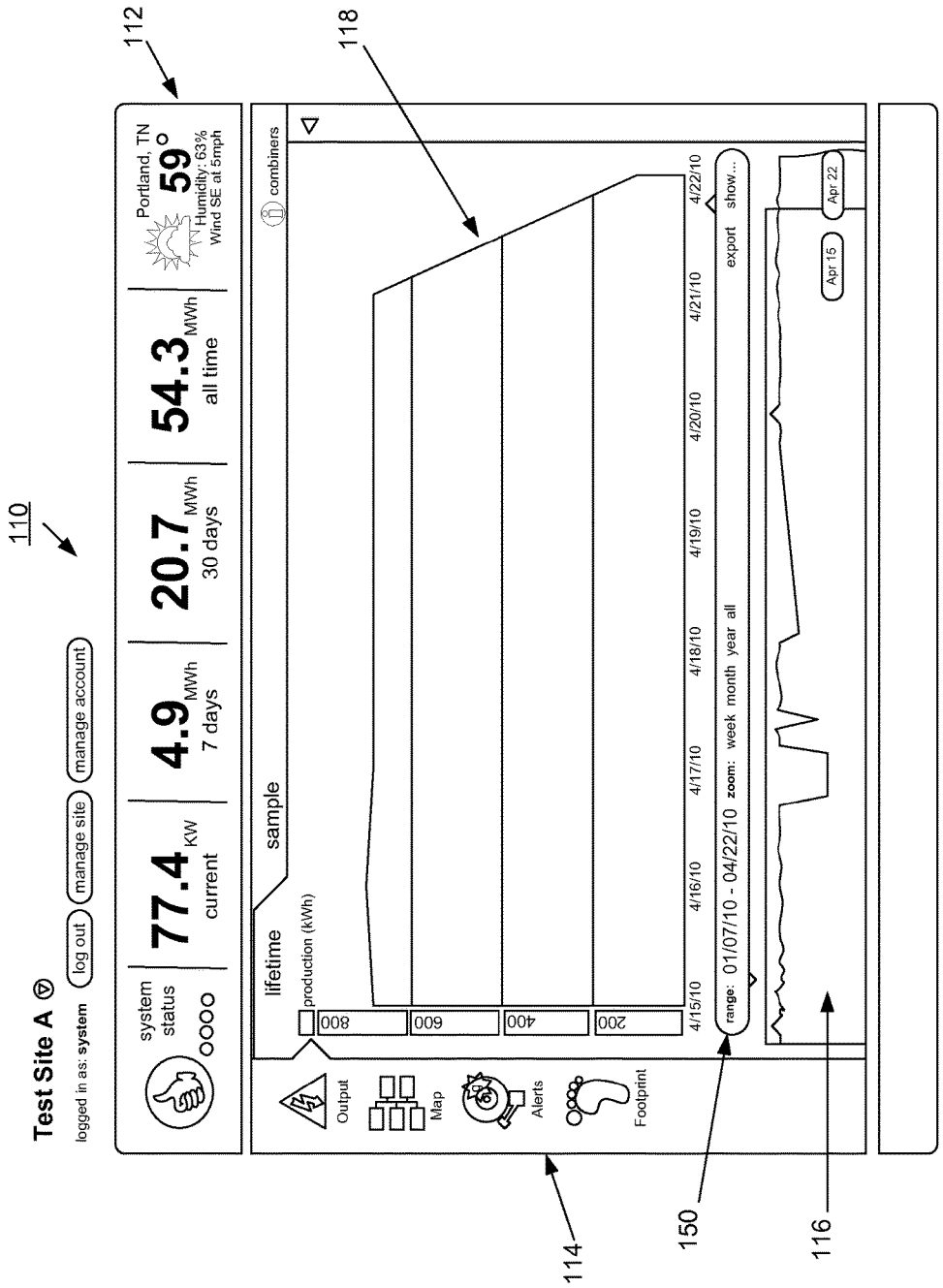
110
112
118
114
150
116
Test Site A
logged in as: system
log out
manage site
manage account
system status
77.4 KW current
4.9 MWh 7 days
20.7 MWh 30 days
54.3 MWh all time
Portland, TN
59°
Humidity: 63%
Wind SE at 5mph
combiners
sample
lifetime
production (kWh)
800
600
400
200
4/15/10
4/16/10
4/17/10
4/18/10
4/19/10
4/20/10
4/21/10
4/22/10
range: 01/07/10 - 04/22/10 zoom: week month year all
export show...
Apr 15
Apr 22
Output
Map
Alerts
Footprint

FIG. 10A

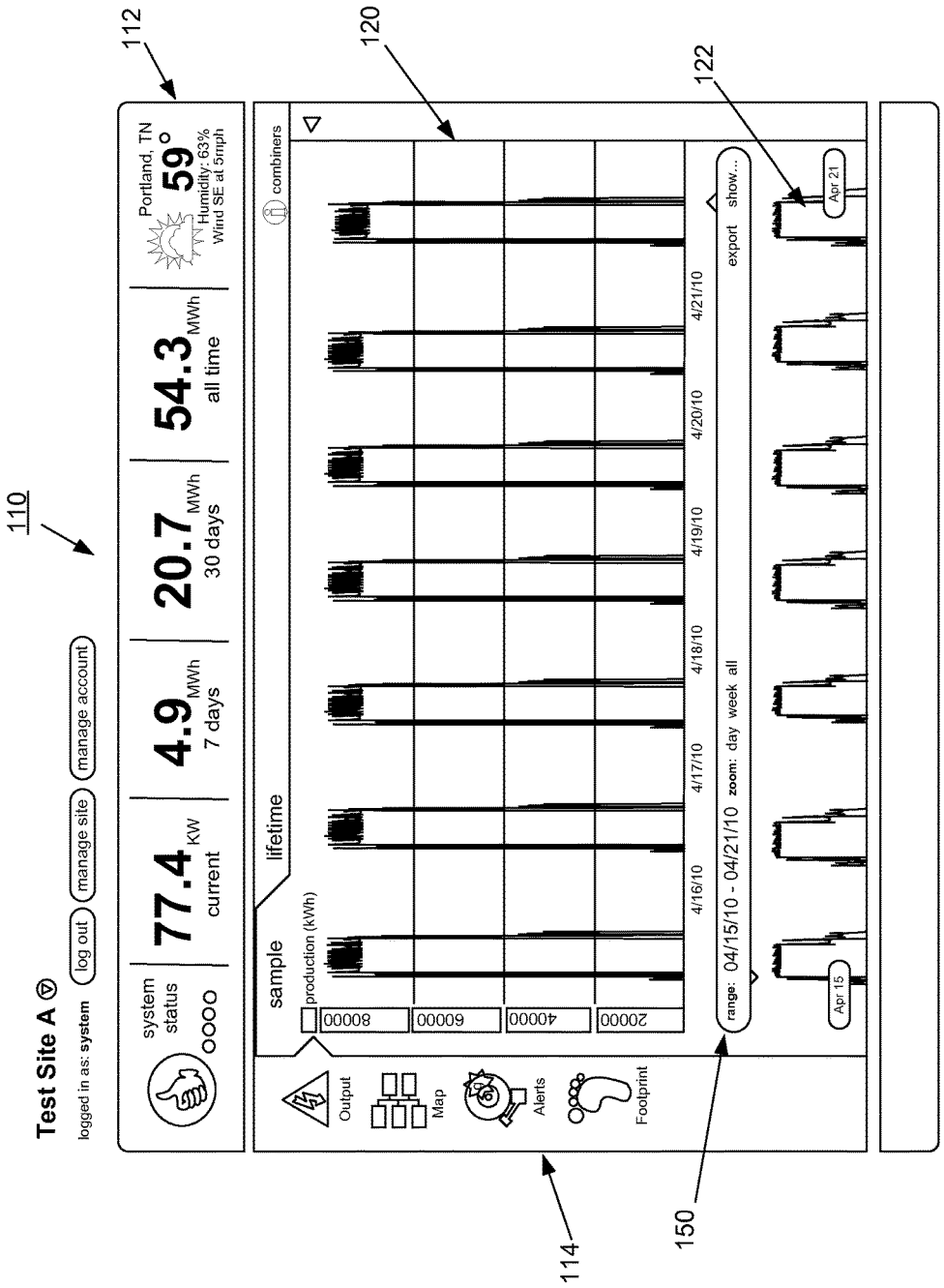
110
112
120
122
114
150
Test Site A
logged in as: system
log out
manage site
manage account
system status
77.4 KW current
4.9 MWh 7 days
20.7 MWh 30 days
54.3 MWh all time
Portland, TN
59°
Humidity: 63%
Wind SE at 5mph
sample
lifetime
combiners
production (kWh)
80000
60000
40000
20000
4/16/10
4/17/10
4/18/10
4/19/10
4/20/10
4/21/10
range: 04/15/10 - 04/21/10 zoom: day week all
export show...
Apr 15
Apr 21
Output
Map
Alerts
Footprint

FIG. 10B

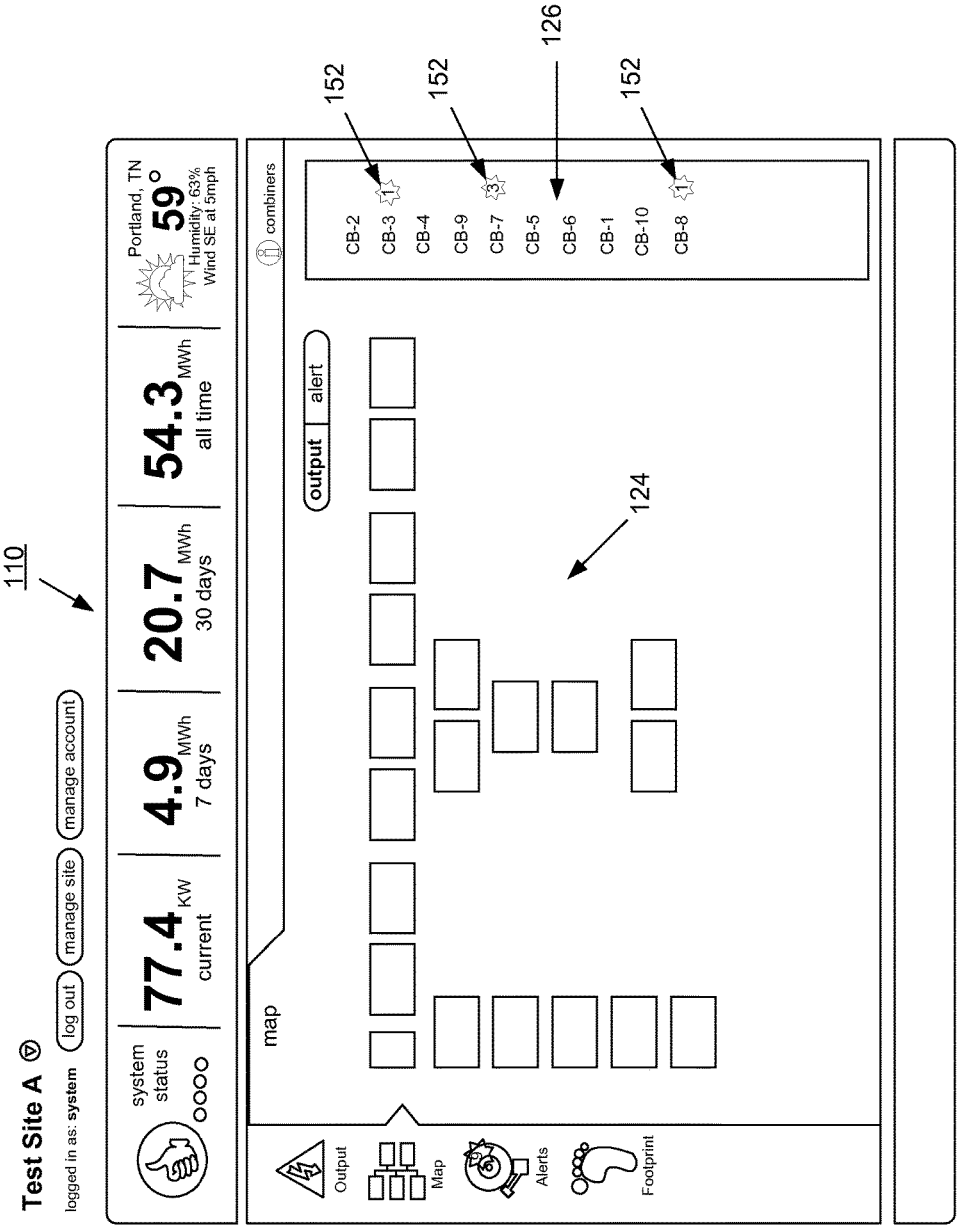
110
Test Site A
logged in as: system
log out
manage site
manage account
system status
77.4 KW current
4.9 MWh 7 days
20.7 MWh 30 days
54.3 MWh all time
Portland, TN
59°
Humidity: 63%
Wind SE at 5mph
map
output
alert
combiners
CB-2
CB-3
CB-4
CB-9
CB-7
CB-5
CB-6
CB-1
CB-10
CB-8
152
152
126
152
124
Output
Map
Alerts
Footprint

FIG. 10C

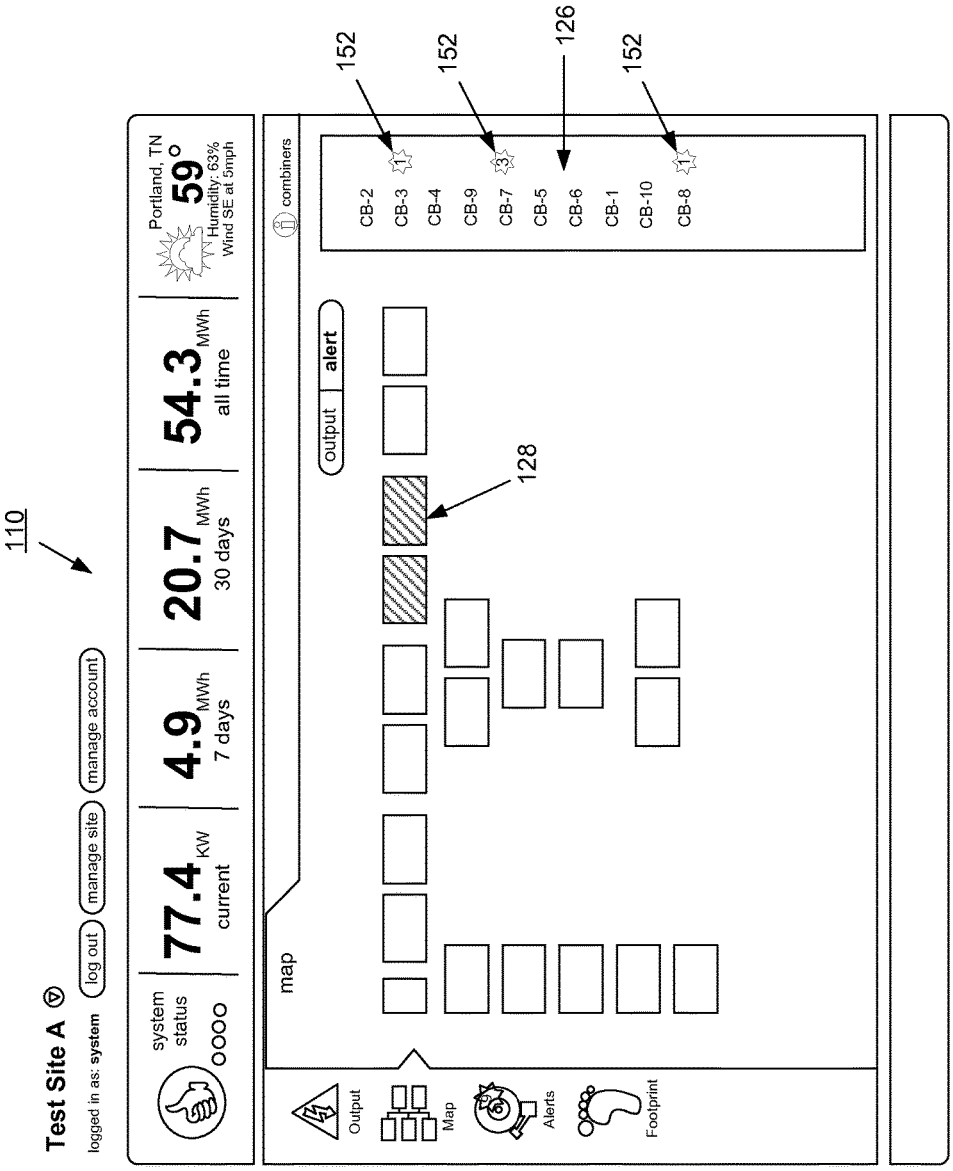
110
Test Site A
logged in as: system
log out
manage site
manage account
system status
77.4 KW current
4.9 MWh 7 days
20.7 MWh 30 days
54.3 MWh all time
Portland, TN
59°
Humidity: 63%
Wind SE at 5mph
map
combiners
output
alert
CB-2
CB-3
CB-4
CB-9
CB-7
CB-5
CB-6
CB-1
CB-10
CB-8
152
152
126
152
128
Output
Map
Alerts
Footprint

FIG. 10D

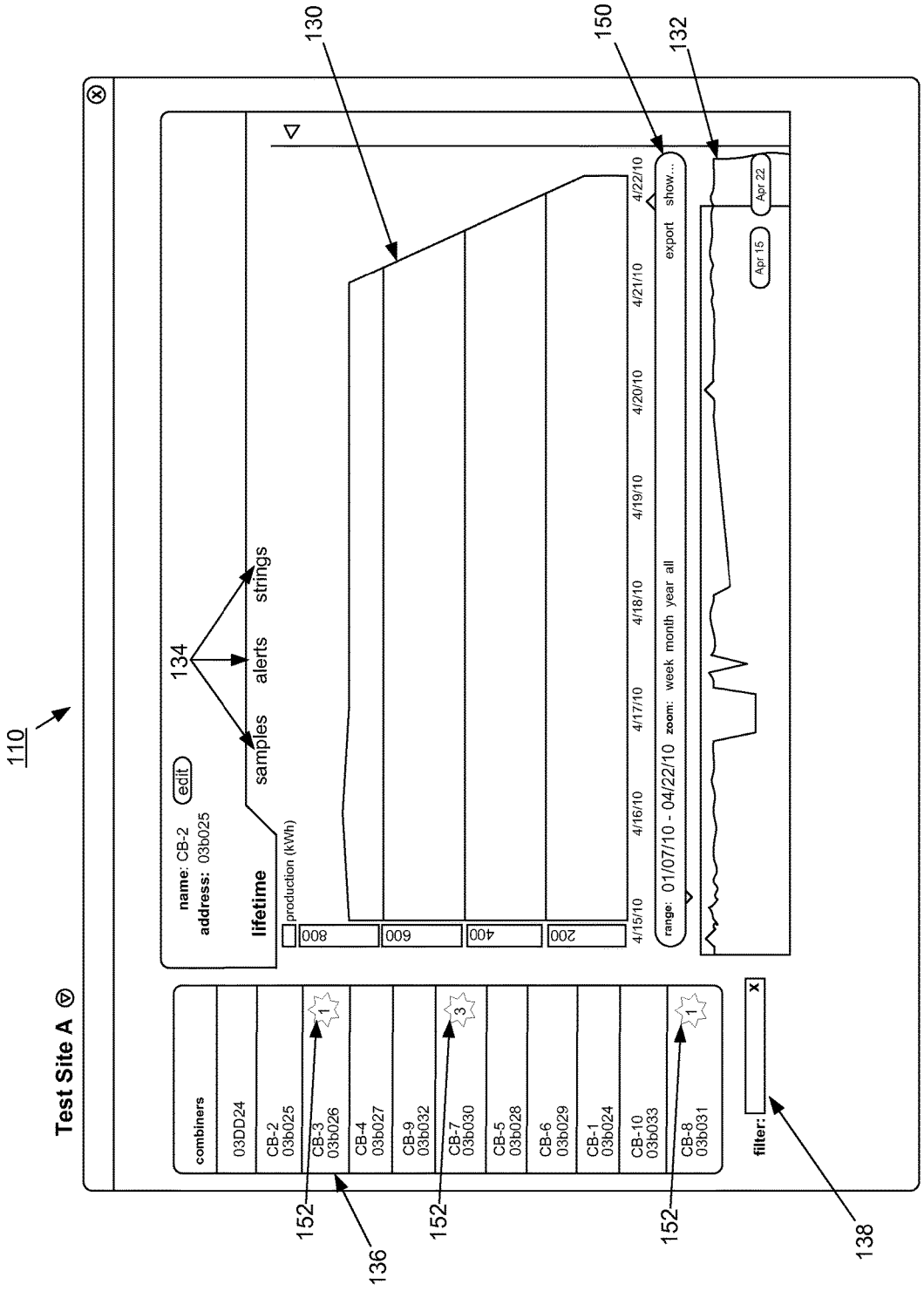
110
Test Site A
130
150
132
134
name: CB-2
address: 03b025
edit
lifetime
samples
alerts
strings
production (kWh)
800
600
400
200
4/15/10
4/16/10
4/17/10
4/18/10
4/19/10
4/20/10
4/21/10
4/22/10
range: 01/07/10 - 04/22/10
zoom: week month year all
export
show...
Apr 15
Apr 22
combiners
03DD24
CB-2 03b025
CB-3 03b026
CB-4 03b027
CB-9 03b032
CB-7 03b030
CB-5 03b028
CB-6 03b029
CB-1 03b024
CB-10 03b033
CB-8 03b031
1
3
1
filter:
152
152
152
136
138

FIG. 10E

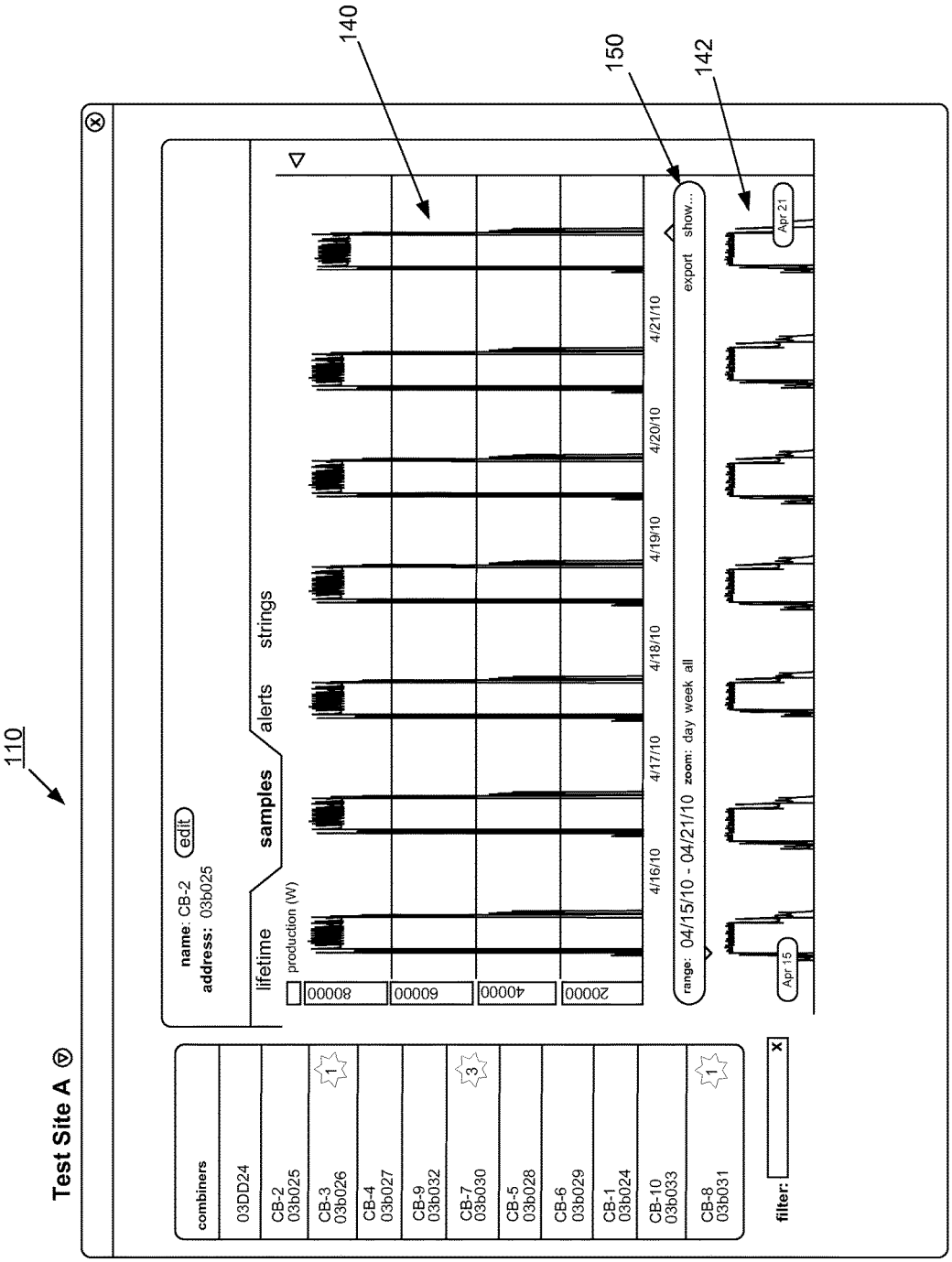
110
Test Site A
combiners
03DD24
CB-2 03b025
CB-3 03b026
CB-4 03b027
CB-9 03b032
CB-7 03b030
CB-5 03b028
CB-6 03b029
CB-1 03b024
CB-10 03b033
CB-8 03b031
filter:
name: CB-2
address: 03b025
edit
lifetime
samples
alerts
strings
production (W)
80000
60000
40000
20000
4/16/10
4/17/10
4/18/10
4/19/10
4/20/10
4/21/10
range: 04/15/10 - 04/21/10
zoom: day week all
export
show...
Apr 15
Apr 21
140
150
142

FIG. 10F

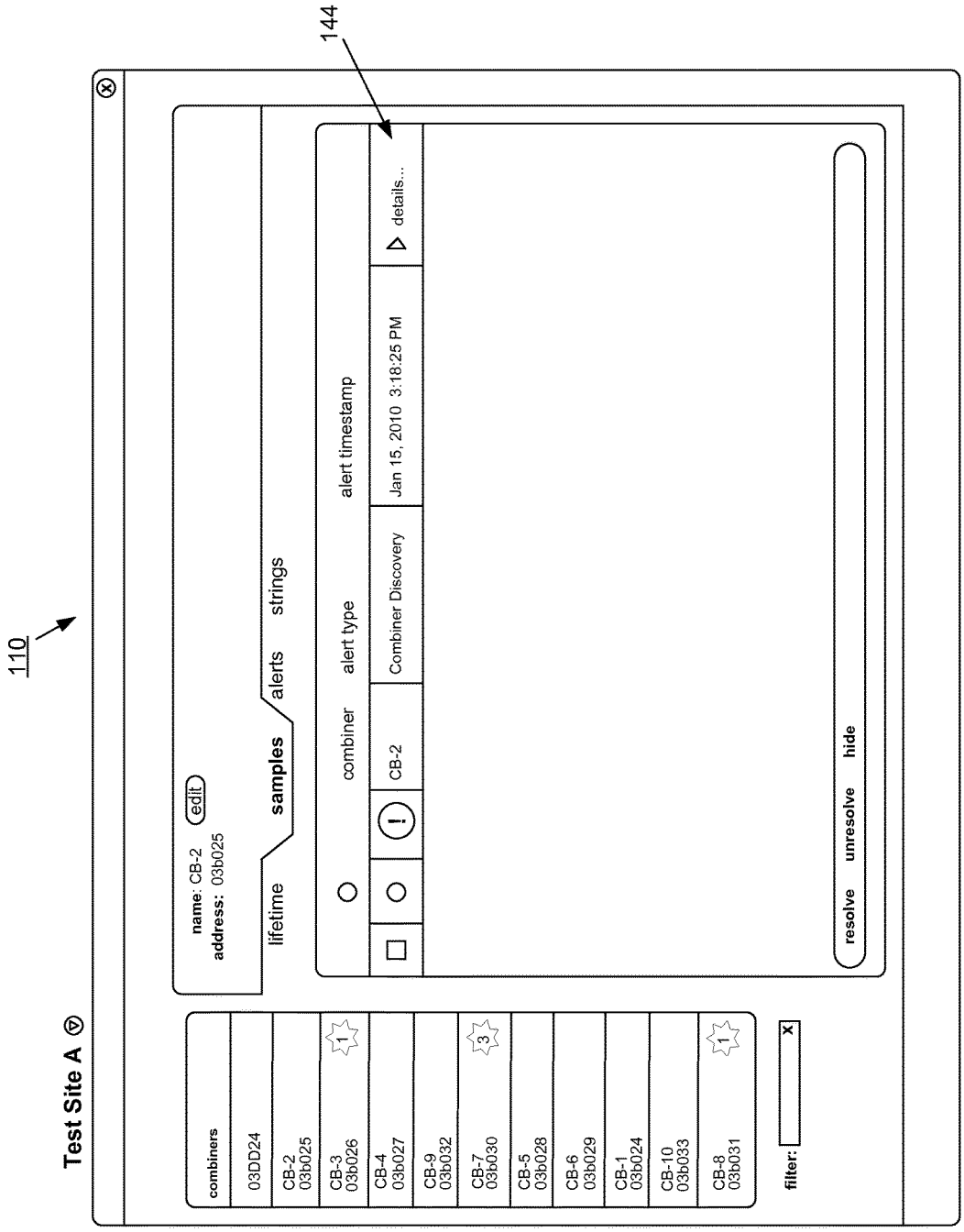
110
144
Test Site A
name: CB-2
address: 03b025
edit
lifetime
samples
alerts
strings
combiners
03DD24
CB-2 03b025
CB-3 03b026
CB-4 03b027
CB-9 03b032
CB-7 03b030
CB-5 03b028
CB-6 03b029
CB-1 03b024
CB-10 03b033
CB-8 03b031
filter:
combiner
alert type
alert timestamp
CB-2
Combiner Discovery
Jan 15, 2010 3:18:25 PM
details...
resolve
unresolve
hide

FIG. 10G

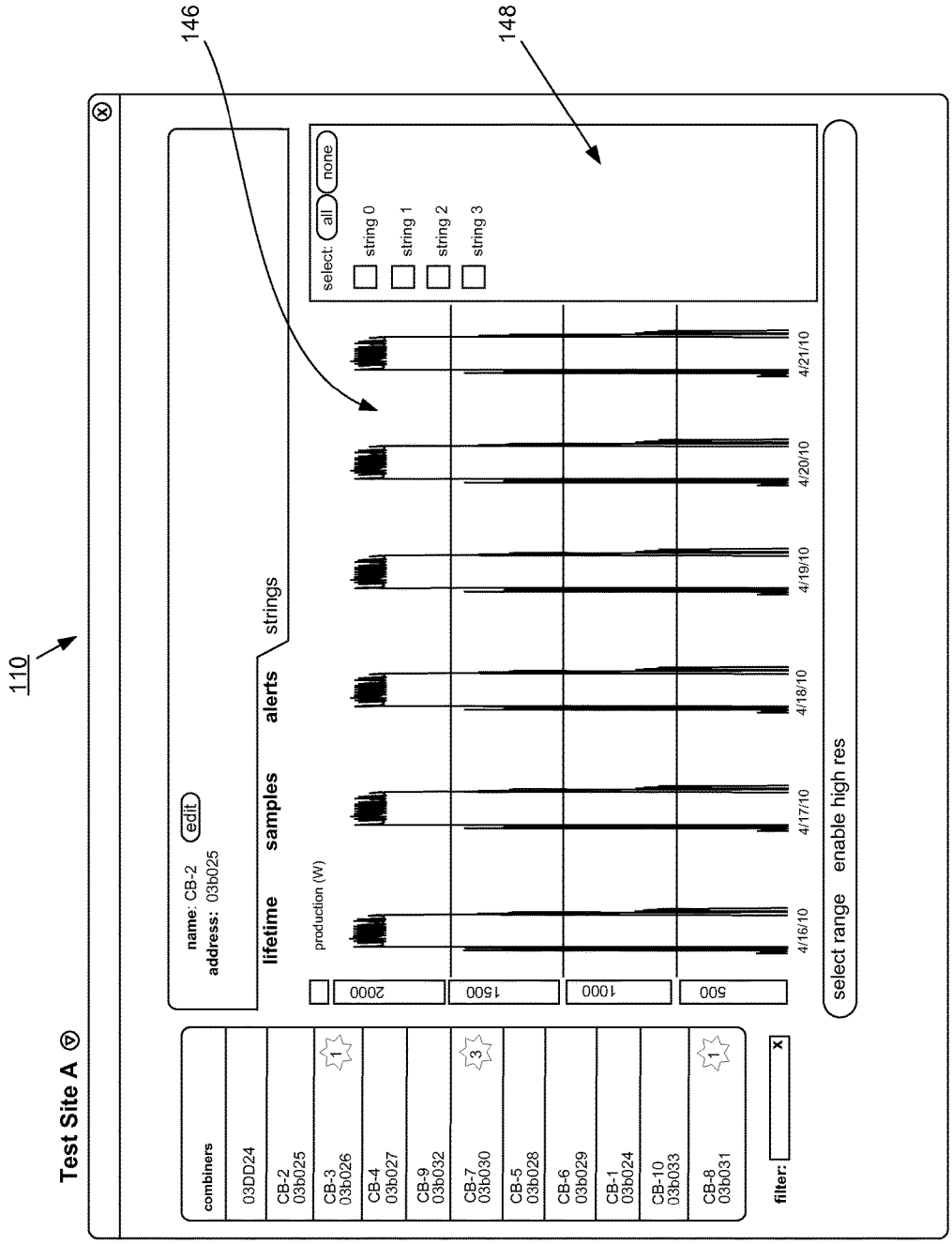
110
146
148
Test Site A
combiners
03DD24
CB-2 03b025
CB-3 03b026
CB-4 03b027
CB-9 03b032
CB-7 03b030
CB-5 03b028
CB-6 03b029
CB-1 03b024
CB-10 03b033
CB-8 03b031
filter:
name: CB-2
address: 03b025
edit
lifetime
samples
alerts
strings
production (W)
2000
1500
1000
500
4/16/10
4/17/10
4/18/10
4/19/10
4/20/10
4/21/10
select range
enable high res
select:
all
none
string 0
string 1
string 2
string 3

FIG. 10H

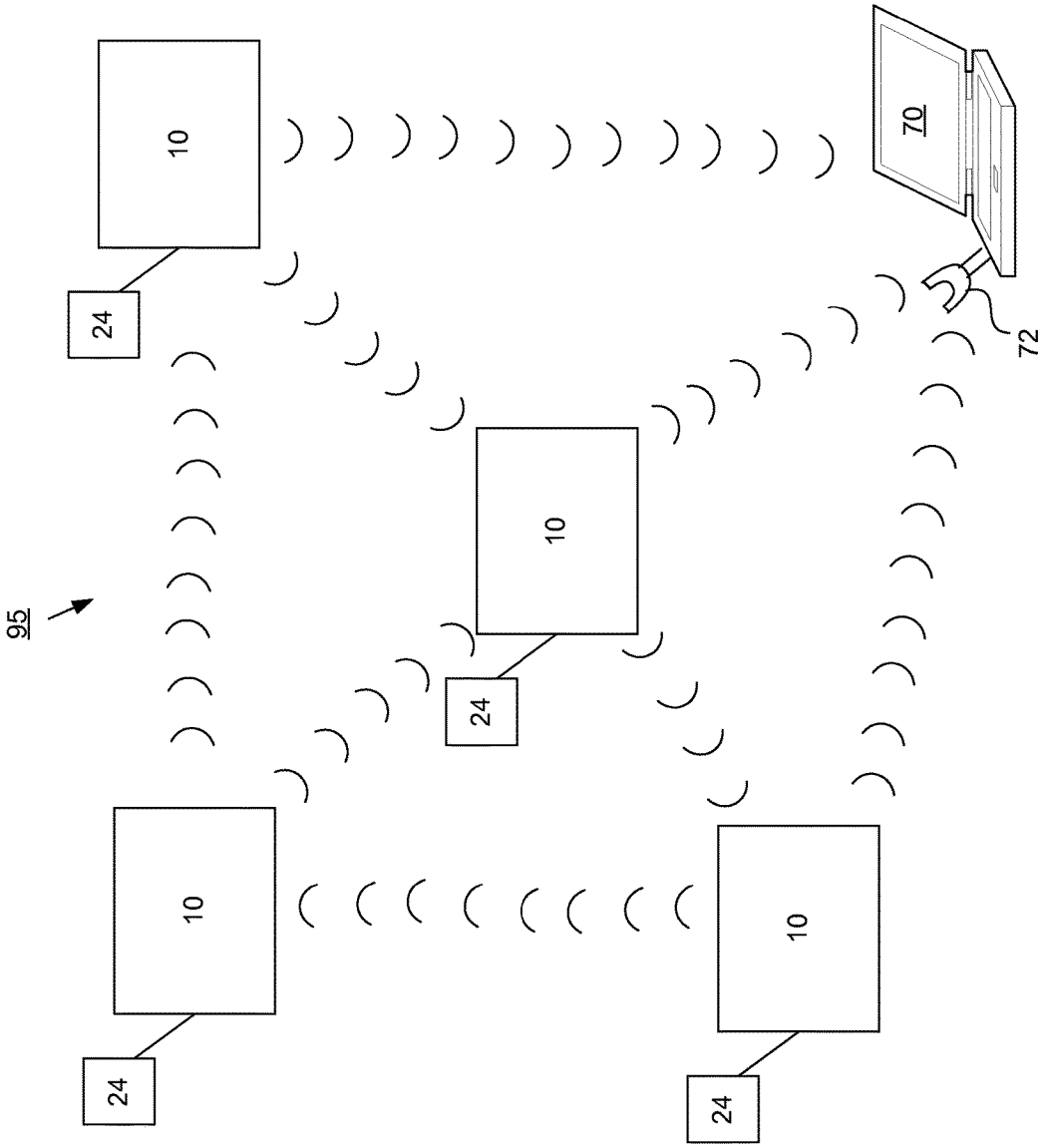

FIG. 11

SOLAR ARRAY RECOMBINER BOX WITH WIRELESS MONITORING CAPABILITY

BACKGROUND

(1) Field

The present invention relates generally to recombiner boxes used in the solar industry and, more particularly, to recombiner boxes capable of monitoring the energy output of solar panels in an array, and wirelessly transmitting output data to a central processor.

(2) Related Art

As the world's energy demands have increased, it has become clear that dependence on non-renewable resources is not sustainable from a supply or environmental standpoint. Thus, more attention is being paid to so-called alternative energy such as wind and solar. This attention has led to significant advances in alternative energy technology, to the point that utility companies are increasingly interested in solar generated energy. However, the large-scale production of solar energy requires infrastructure beyond a sunny field full of solar collectors.

Solar collectors, by design, are typically somewhat fragile. In addition, for high-output production, for example utility scale production, collectors are usually spread over a large outdoor area. Given the propensity to break, and the exposure to outdoor variations and hazards, solar collectors experience fluctuations in energy output, technical difficulties, and/or outright failure. Thus, in order to maximize efficiency of a solar energy system, it is important to be able to monitor the solar collectors in an array.

Others have attempted to monitor the output of solar arrays, but known systems are wired, complicated, cumbersome, not amenable to retrofitting pre-existing combiner boxes, and/or difficult to integrate with an existing system.

Thus, there remains a need for a monitoring system that wirelessly monitors the energy output of solar panels in an array. Preferably this system can be integrated with currently existing recombiner boxes to provide retrofitted monitoring capability. Preferably this system powers itself from the collected solar energy, and stores energy for use during lulls, for example through the evening. Preferably this system can communicate wirelessly with other recombiner boxes, thereby creating a mesh network wherein recombiner boxes can reroute their communication if one path is lost. Preferably this system can alert a user when a certain condition is met, for example if the current of an array is significantly lower than another comparable array. Preferably this system is relatively easy and inexpensive to manufacture, transport, install and maintain.

SUMMARY OF THE INVENTIONS

The present invention is directed to a system for monitoring the current and voltage output of solar panels in a solar array. This data is collected by a device that is predominately located in a recombiner box, including a sensor control module, brain, RF controller, power brick and terminal block. The RF controller sends signals to a remote central processor, which in turn makes the processed data available, for example on the internet, for authorized users. In this sense the central processor acts as a gateway. The central processor includes a dashboard interface for displaying various data, such as current, voltage and temperature.

The system can be configured to monitor panels in one array, as described above, or so that multiple systems

communicate with each other in a mesh network, with data ultimately being received by the central processor.

The sensor control module "plugs" into fuses in a recombiner box, with each fuse in the recombiner box corresponding with one string of solar panels in a solar array. In this manner the sensor control module monitors the system for, for example, degradation in current, which could indicate a solar panel in an array is not operating properly. The sensor control module is L-shaped, and can be fitted into commercially available recombiner boxes. Alternatively, recombiner boxes can be built including the monitoring system. The sensor control module includes a plurality of magnetized cores and Hall effect sensors for measuring the current for each array of solar panels. The sensor control module also includes a connection to a bus bar, for measuring the voltage of the entire array. The brain assimilates this data and sends it to the RF controller for dissemination to other receivers in the mesh network, or to the central processor.

The monitoring system is powered by energy it taps from the array, and includes a battery pack and charger for continuous power through solar array output lulls. The monitoring system could also be configured for non-parasitic installations.

These and other aspects of the present inventions will become apparent to those skilled in the art after a reading of the following description of the preferred embodiment when considered with the drawings.

BRIEF DESCRIPTION OF THE DRAWING

FIG. **1** schematically represents an overview of an embodiment of a monitoring system;

FIG. **2** is an exploded, perspective view of a sensor control module;

FIG. **3** is a side view of a sensor control module;

FIG. **4** is an end view of a sensor control module;

FIG. **5** is a perspective view of a screw assembly and bobbin;

FIG. **6** is a side view of a screw assembly and bobbin;

FIG. **7** is a perspective view of a screw assembly;

FIG. **8** is a side view of a core with flexible circuit board passing though;

FIG. **9** depicts a flexible circuit board;

FIG. **10** provides screen shots of an example user interface, more specifically with:

FIG. **10**A showing a lifetime and preview graph;

FIG. **10**B showing a site level sample graph and site level preview graph;

FIG. **10**C showing a site map; FIG. **10**D showing a site level alert;

FIG. **10**E showing a combiner graph and a combiner lifetime preview graph;

FIG. **10**F showing a combiner sample graph and combiner sample preview graph;

FIG. **10**G showing a combiner alert; and

FIG. **10**H showing a combiner string level graph; and

FIG. **11** schematically represents a mesh network.

DESCRIPTION OF THE PREFERRED EMBODIMENTS

In the following description, like reference characters designate like or corresponding parts throughout the several views. It should be understood that the following descriptions and illustrations describe preferred embodiments of the inventions, but are not intended to limit the inventions thereto.

The following structure numbers shall apply to the following structures among the various FIGS.:

10—Monitoring system;
12—Temperature circuit;
13—Solar array;
15—Solar panel;
16—Temperature sensor;
17—Temperature sensor data output;
18—Monitoring input branch;
19—First HV return;
20—Terminal block;
21—Second HV return;
22—Third HV return;
23—Fourth HV return;
24—Set of arrays;
25—Recombiner box
26—Fuses;
27—Fuse bars;
28—Leg;
29—Foot;
30—Sensor control module;
31—Leg base;
32—Leg lid;
33—Leg end cap;
34—End cap spring clip;
35—Aperture;
36—Locking mechanism;
37—Sensor control module current inputs;
38—Bus bar;
39—First HV supply;
40—Bobbin;
41—Screw assembly;
42—Bobbin input terminal;
43—Windings;
44—Bobbin output terminal;
45—Core;
46—Flexible circuit board;
47—Pad stack;
48—Hall-effect sensor;
49—Notches;
50—RF controller;
51—Antennae;
52—RF signal;
53—Power supply;
54—Control module multi-conductor cable;
55—Battery;
56—Charger;
58—RF controller low voltage and ground;
60—Power brick;
61—Second HV supply;
63—Brain;
64—Boot base;
65—Printed circuit board;
66—Foot lid;
70—Processor;
72—RF dongle;
74—Dashboard;
80—Inverter;
82—Movable plate;
83—Screw lock box;
84—Screw lock clamp;
85—Clamp screw;
86—Three-point terminal;
87—Tab;
88—String monitor terminal;
90—Gap;
91—Flex circuit holders;
92—Flex board cut outs;
95—Mesh network;
110—User interface;
112—Overview bar;
114—Navigation bar;
116—Preview graph;
118—Lifetime graph;
120—Site level sample graph;
122—Site level preview graph;
124—Site map;
126—Combiner bar;
128—Site level alert;
130—Combiner lifetime graph;
132—Combiner lifetime preview graph;
134—Navigation tabs;
136—Combiner navigation;
138—Drill-down filter;
140—Combiner sample graph;
142—Combiner sample preview graph;
144—Combiner alert;
146—Combiner string level graph;
148—String selection;
150—Selection bar; and
152—Badge.

As used herein, "recombiner box" and "combiner box" are interchangeable terms, and the inventions can be used with either configuration.

FIG. **1** provides an overview of monitoring system **10** and some associated interconnections. Solar panels **15**, individually designated as **15***a*, **15***b*, **15***c* and so on, collectively form corresponding solar arrays **13***a*, **13***b*, **13***c* and so on. Solar panels **15** are wired to system **10** by monitoring input branch **18**, with individual wires designated as **18***a*, **18***b* **18***c* and so on, corresponding to individual solar arrays **13***a*, **13***b*, **13***c* and so on. Temperature sensor **16** preferably measures ambient, but can also measure the temperature of specific components of panel **15**. FIG. **1** depicts temperature sensor **16** associated with only array **13***j*, but it should be understood that it is preferable that at least solar panel **15** in each array **13** includes one temperature sensor **16**.

The major components of system **10** include temperature circuit **12**, terminal block **20**, sensor control module **30**, RF controller **50**, power brick **60**, and processor **70**. Power leaving system **10** goes to inverter **80**, in accordance with known solar power generation architecture.

Temperature circuit **12** is connected to temperature sensor **16** by temperature sensor data output **17**. Array **13** preferably includes only a single, properly positioned temperature sensor **16**, as the temperature reported from one panel **15** can be representative of all panels, and more than one properly positioned temperature sensor would likely be unnecessarily redundant. Temperature circuit **12** is integrated with RF controller **50**, with the latter transmitting temperature data RF signals **52** to processor **70**.

System **10** also includes terminal block **20**, with first, second, third and fourth high voltage returns **19**, **21**, **22** and **23**, respectively, which are on a common node, as shown in FIG. **1**. As would be understood by those in the art, high voltage returns **19**, **21**, **22** and **23** create a complete negative high voltage path, thereby delivering high voltage return from terminal block **20** to power brick **60**. Bus Bar **38** is high voltage positive (+)

Power brick **60** powers system **10** by diverting high voltage from other components in the system, and stepping down the voltage to lower voltage, preferably 14V. As used herein, "high voltage" is at least 600V, and preferably 600V, 1000V or 1500V. Third high voltage return **22** and second

high voltage supply **61** deliver high voltage from terminal block **20**(−) and bus bar **38**(+), respectively, to power brick **60**. First high voltage supply **39** delivers high voltage from bus bar **38** to inverter **80**, and therefore, like second high voltage supply **61**, has the same potential as bus bar **38**. Power brick **60** supplies 14V power and ground to RF controller **50**, and to the components associated with sensor control module **30** via RF controller **50**.

RF controller **50** is in communication with, and receives current and voltage data from brain **63** of sensor control module via control module multi-conductor cable **54**. RF controller **50** also receives temperature data from temperature sensor **16** via temperature sensor data output **17**. These data are transmitted by antennae **51** as RF signals **52** to processor **70**. RF controller **50** preferably includes RF engine (not shown) which is a product of Synapse Wireless Incorporated in Huntsville, Ala., and commercially available as RF100PC6 from Future Electronics in Huntsville, Ala.

RF controller **50** also includes power supply/voltage regulator **53**, charger **56** and battery pack **55**. Power supply/voltage regulator **53** is fed by RF controller low voltage and ground **58**. Those in the art will understand that RF controller low voltage and ground **58** is a multiconductor cable, but conducts voltage and ground only. Charger **56** is powered by power supply/voltage regulator **53**. Battery pack **55** includes a circuit board for dealing with over-temperature, and for shutting down and monitoring capability. Battery pack **55** is necessary because solar power collected on-the-fly is not always adequate to power the system. For example, current available to power the system varies according to time of day, weather, and whether or not the system is functioning properly. Battery pack **55** ensures system **10** continues operating regardless of power generated. Preferably battery pack **55** is 3.6 V. Preferred battery pack **55** can be purchased as part number XSS-ICR18650-22-PC from House of Batteries, in Fountain Valley, Calif.

Processor **70** includes RF dongle **72**, which receives RF signals **52** emitted by antennae **51** of RF controller **50**. Processor **70** can be a standard desktop, laptop computer, or industrial PC, which has access to, or has been loaded with, appropriate "dashboard" software, and preferably includes Synapse Wireless Incorporated of Huntsville, Ala.'s gateway adaptor, which is commercially available as RF100PC6 from Future Electronics in Huntsville, Ala. The minimum performance specifics of processor **70** vary according to the number of solar arrays **13**, and therefore amount of data to be processed. RF dongle **72** is a product of Synapse Wireless Incorporated in Huntsville, Ala., and is commercially available as SN-132HO-NR from Future of Electronics of Huntsville, Ala.

Screen shots from a representative dashboard program are set forth in FIG. **10**. "Dashboard" software preferably includes an interface which displays data such as current, voltage, weather, and/or temperature in a user friendly manner. Specifically, user should be able to ascertain current (ie Amps), temperature and cumulative voltage for each solar array **13**. Preferably, with all graphs and data displays, a user can mouse over any specific data point, and the interface will display the data collected at that point in time. It is also preferable that all information is contained in a single display with a navigation bar and "lightbox" effect providing the only two navigation elements. Specifically, it is preferred that the primary elements are navigable using the bar, but that the detailed view of any element is found in a "lightbox" overlay. In this manner the user can easily return to the main screen and back out of a high resolution view by simply clicking outside or closing the lightbox. This reduces the time required to use the system, and overall click count.

Referring now to FIG. **10**A, user interface **110** includes overview bar **112**, which displays the system status in "real time". As used herein, "real time" means data points are collected in accordance with the polling rate of the system, for example every 5 seconds. The polling rate is selectable by the user. Preferably, reported parameters include current; 7 day, 30 day and lifetime power output; and weather. Overview bar **112** is present throughout all views, as depicted in FIGS. **10**A-**10**H. Navigation bar **114** provides quick access to the four major sections of the system: output graphs, site map, alerts and environmental footprint data. Lifetime graph **118** visually represents system data collected over the lifetime of the system. Power output, current, voltage, temperature, irradiance, humidity, wind speed and alert counts can be plotted on top of lifetime graph **118** by clicking "show" and selecting the data to display. A user can select a time range by clicking and dragging on lifetime graph **118**, thereby creating an overview of weather and alerts in the preview graph **116**. A user automatically transitions to "Sample View" by clicking inside of the selected range, thereby displaying a higher resolution sample of data.

Preview graph **116** shows a miniature representation of the system over its lifetime. A user can click and drag to select a range, or select a quick zoom in selection bar **150**, such as week, month or year. The selected range is displayed in lifetime graph **118**.

Referring now to FIG. **10**B, site level sample graph **120** displays the data set for a selected range, which has been selected in lifetime graph **118** or selection bar **150**. Similar to other graphs in user interface **110**, one can plot additional data by selecting the "Show" button. These data points are in real time while lifetime graph **118** collects data daily, or at another increment.

The dashboard technology is capable of importing the combiner layout (ie graphic representation of where specific combiner boxes are physically located relative to each other) from an external site plan, and displaying that layout as site map **124**, shown in FIG. **10**C. Site map **124** displays current output, and is further divided according to which specific combiner boxes service each section. It is preferable that power output in combiner bar **126** is further emphasized by displaying in bright green at high output, thereby facilitating a quick overview of function, and the ability to quickly identify problems. Badge **152** indicates the alert count and priority of the alerts occurring at that combiner.

It is further preferable that mousing over any section of site map **124** results in a tool tip pop up (not shown) that displays the real-time power, current and voltage, and the combiner ID for that section, in addition to highlighting it in the combiner bar **126**.

Site level alert **128**, as shown in FIG. **10**D, provides a graphical representation of where alerts exist in the field. Alerts are represented by colors, for example green for the lowest level alerts which do not affect performance, yellow for medium level alerts which affect performance, and red for critical alerts. Clicking on the colored section displays the alert in an alerts lightbox window, not shown.

FIG. **10**E depicts a combiner view, including navigation tabs **134** correlating to "Samples", "Alerts", and "Strings". Clicking the alert tab enables the user to view the alerts for a particular combiner box. Note that combiner alerts in combiner navigation **136** indicate badges **152** as well as identifying the particular combiner. Specific combiner boxes **25** in the field can be selected using combiner navigation bar

136. Drill-down filter **138** allows for quick selection of a combiner box **25** when working with large numbers. As the user types the name of combiner box **25** the list to the left filters down, narrowing the selection to help the user quickly find the desired combiner box **25**.

Referring now to FIG. **10**F, combiner sample graph **140** is slightly different than the others previously discussed insofar as the user is not looking at the rollup data. Instead, they are seeing the individual string readings for each combiner. Clicking "Show" turns on and off the display of strings in the graph as well as plots additional data over top. FIGS. **10**G and **10**H show the history of alerts for CB2, with **10**H showing the individual strings.

Processor **70** preferably also includes functionality to remotely alert users when certain threshold data, or combinations of data, are received. By way of example, a sudden and significant decrease in current for a given array **13** may indicate a problem with an individual solar panel **15**. Suitable alerts could be communicated via telephone, text messaging, emails, beepers, sirens or the like.

Sensor control module **30** is the "nerve center" of system **10**. As shown in FIG. **1**, module **30** includes a longer portion, leg **28**, which is positioned parallel to the row of fuses **26**, and measures the current of associated solar panels **15**. Attached approximately perpendicular to one end of leg **28** is a shorter portion, foot **29**, which contains brain **63** of the system. Attached approximately perpendicular to the other end of foot **29**, is bus bar **38**, which is used for determining overall voltage of array **13**. This "L-shaped" design ("U-shaped" including bus bar **38**) lends itself to integration with commercially available recombiner boxes, thereby allowing currently existing recombiner boxes to be retrofitted with sensor control module **30**. An example of a commercially available recombiner box amenable to retrofit is the STG-CBC-16 from Shoals Technologies Group in Portland, Tenn. It is also possibly to modify almost any recombiner box to allow retrofitting, although the configuration of the recombiner box may render this a cumbersome task. Also, sensor control module **30** can be integrated with recombiner boxes at time of manufacturing/assembly.

Referring to FIG. **2**, leg **28** includes leg lid **32**, defining a plurality of apertures **35**, corresponding to the number of fuses **26**, which corresponds with the number of associated arrays **13**. Leg lid **32** includes a plurality of locking mechanisms **36** each mating with locking mechanisms **36** of leg base **31**. The "free" end of leg **28** includes leg end cap **33**, which covers the end of leg lid **32** and leg base **31**. Foot **29** includes lid **66** and boot base **64**, and is held together by mating locking mechanisms **36**. Although sensor control module **30** is discussed herein as comprising leg **28** and foot **29**, it should be understood that leg **28** and foot **29** are not separable parts, rather, they are discussed separately for purposes of more clearly describing the structure of the overall system.

The "guts" of leg **28** include the screw assembly **41**, which sits above bobbin **40**, and flexible circuit board **46** including Hall effect sensors **48** (seen best in FIG. **9**). Screw assembly **41** and bobbin **40** are connected, as shown in FIGS. **5** and **6**. Screw assembly **41**, best shown in FIG. **7**, positions sensor control module current input **37** (see FIG. **1**) for measuring current. Specifically, when clamp screw **85** is rotated, screw lock clamp **84** with moveable plate **82** moves downwardly within screw lock box **83**, thereby clamping sensor control module current input **37** (not shown) between screw lock box **83** and moveable plate **82**. Clamp screw **85** preferably defines a cold head, for Phillips and straight screw drivers.

Referring to FIG. **5**, screw assembly terminates in dual bobbin input terminals **42**, and bobbin output terminal **44**, which is in communication with string monitor terminal **88**. Between input **42** and output **44** terminals, is ferrite core **45**, with wire windings **43** wrapped around. As best shown in FIG. **8**, the lower portion of core **45** defines gap **90**. In use, current from sensor control current input strings **37***a*-**37***j* is carried down screw terminal **41** to bobbin input terminals **42**, across windings **43**, through string monitor terminal **88**, through fuses **26**, then to bus bar **38**. Wire windings **43** can be varied with respect to wire material, wire gauge, and number of turns according to the amount of current that is to be sensed. For example, for a system that senses current in the range of 8 A to 12 A, a #10 gauge wire constructed of copper magnet wire with two evenly spaced windings would be appropriate. Core **45** is preferably manufactured in two separate pieces, and joined in the assembly process since windings **43** must be positioned around core **45**.

Referring now to FIG. **8**, the lower portion of core **45** includes gap **90**, through which flexible circuit board **46** (shown in profile), including Hall effect sensor **48**, passes. In this manner, Hall effect sensor **48** senses the magnetic field between two core **45** ends at gap **90** when current passes through windings **43**. Flex circuit holders **91** in leg base **31** (FIG. **2**) hold flexible circuit board **46** in position by defining notches **49** into which board **46** fits. Windings **43** wrap around the upper portion of core **45**, but are depicted partially removed in FIG. **8** for purposes of clearly showing the orientation of core **45**.

As shown in FIG. **9**, flexible circuit board **46** includes Hall effects sensors **48**, and pad stack **47**, which connects to printed circuit board **65**. Flexible circuit board **46** is preferably manufactured with multiple Hall effect sensors **48**, separated by opposing pairs of cut outs **92**, and terminating in a single pad stack **47**. This permits one long flexible circuit board **46** to be adapted according to the number of fuses **26** by simply severing at cut outs **92**. For example, flexible circuit board **46** preferably provides sixteen Hall effect sensors **48** and pairs of cut outs **92**, but for use in a system with 12 fuses **26**, the flexible circuit board is cut at the 12th set of cut outs **92**, counting from the end that includes pad stack **47**.

Turning back to FIG. **1**, bus bar **38** is engaged with foot **29**, and fuses **26**, and senses the voltage of the overall system. This data is communicated to brain **63**, then RF controller **50** via control module multi-conductor cable **54**, which is an I^2C communication protocol, and also provides power. As used herein, brain **63** refers collectively to flexible circuit board **46** and printed circuit board **65**, and is responsible for transferring voltage, "V-out", from hall-effect sensor(s) **48** located on the flexible circuit board **46**. As would be understood by those skilled in the art, V-out is created by hall-effect sensor **48**, and is a voltage proportional to that of the current passing through the respective windings **43** of associated bobbin **40**. In addition, brain **63** measures voltage directly from bus bar **38**. These data are assimilated and transferred to the RF controller **50** via I2C protocol. It should be noted that control module multiconductor cable **54** included low voltage, power, ground, shield, data and clock conductors, with data and clock forming the communication protocol.

In order to facilitate flexibility of the system, length of leg **28** can be varied to accommodate different quantities of fuses. For example, lid **32** preferably defines **16** apertures **35**, but leg **28** can be shortened by clipping, sawing, cutting or the like to accommodate as few as 1 fuse **26**. Likewise, monitoring system **10** is capable of handling many fuses **26**,

depending upon recombiner box. System **10** preferably monitors up to 32 strings without excessive redundancy. Leg end cap **33** (FIG. **2**) snaps onto end of leg **28** to allow for such modifications. By easily varying the length of the flexible circuit board **46** and leg **28**, monitoring system **10** can easily accommodate systems with few or many arrays **13**.

As shown in FIG. **11**, systems **10** can be interconnected to form a mesh network **95**. Specifically, each array **13** is in communication with the associated monitoring system **10**, and each monitoring system **10** is in communication with at least one nearby monitoring system **10**, and capable of exchanging RF signals **52** therewith. This range of communication between systems **10** is within line of sight, up to a maximum of approximately 5,000 feet. In this manner, RF signals **52** from various systems **10** in the network ultimately end up being received by RF dongle **72** of processor **70**, and follow the best path to the internet connection.

An example of the system is a 5.5 MW installation including 12,000 panels **15** from First Solar, Inc. of Tempe, Ariz., model number FS-270. These panels are wired in series in the field using 10-string wire harnesses (aka monitoring input branch **18**) from Shoals Technologies Group in Portland, Tenn. Accordingly, each array **13** includes ten panels **15**. These wire harnesses go into combiner boxes **25**, with each combiner box **25** accommodating 15 wires (input branches **18**), which correspond with 15 arrays. The combiner boxes are available from Shoals Technologies Group as combiner box STG-CBC-15×25. Sensor control module current inputs **37** connect inside the combiner box to the sensor control module **30**. Data from sensor control module **30** is relayed by RF controller **50** to the central processor (**70**) on the site. The current and power output of each array **13** in the field is monitored over the internet with the correct password.

Certain modifications and improvements will occur to those skilled in the art upon a reading of the foregoing description. By way of example, it is possible to add features to the system such as an indicator when a fuse is blown. Also, the system includes extra expansion slots, an expansion pack of sorts, for a variety of functionality such as interfacing with glass temperature gauges or other devices as desired by an end user. Moreover, the dashboard software can be modified to alert a user, or users, to a variety of conditions, for example when the energy output of one panel is significantly lower than others nearby, or when there is a significant decrease in energy output without a corresponding decrease in ambient temperature. These anomalies may indicate that panels in the field require attention because they are, for example, shaded, dirty, or broken. Also, the system could be configured to be a separate "per string monitor" that would permit every string to have its own module, versus integration into a large "L" system. It is also possible to integrate the current sensing into the "fuse holder." In addition, it is possible to configure the system to monitor more than 32 strings at a time without excessive redundancy. It should be understood that all such modifications and improvements have been deleted herein for the sake of conciseness and readability but are properly within the scope of the following claims.

I claim:

1. A solar monitoring system comprising:

A) A plurality of solar panels;

B) One (re)combiner box for aggregating DC power, said (re)combiner box electrically coupled to said plurality of solar panels and including a fuse bar having a plurality of fuses;

C) One sensor control module configured to be plugged into said fuse bar as a solitary unit, said sensor control module including a base with a plurality of locking mechanisms and a lid with corresponding locking mechanisms, said lid defining a plurality of apertures, said sensor control module located within said (re) combiner box and including a plurality of outwardly extending string monitor terminals positioned in a line with each of said string monitor terminals in a fixed position relative to each other while plugged into said fuse bar and while unplugged from said fuse bar, each of said string monitor terminals plugged into a corresponding fuse in said fuse bar, whereby said sensor control module is in communication with said plurality of solar panels, and wherein said sensor control module includes bobbins, the quantity of said bobbins equal to the quantity of said fuses, and said bobbins each including a core comprised of at least two separate portions;

D) An RF controller in communication with said sensor control module, said RF controller including an antenna for wirelessly transmitting a signal; and

E) A receiver for said signal.

2. The system of claim **1** wherein said sensor control module includes at least one current sensor.

3. The system of claim **2** wherein the number of said current sensors is equal to the number of said arrays.

4. The system of claim **1** wherein said sensor control module includes a voltage sensor.

5. The system of claim **1** wherein said RF controller includes a temperature circuit.

6. The system of claim **1** wherein said receiver is in communication with a processor, said processor configured to interpret said signal, and display said interpretation within an interface.

7. A monitoring system for an array of solar panels, said system comprising:

A) A (re)combiner box for aggregating DC power electrically coupled to an array of solar panels, said (re) combiner box including at least one fuse bar with a plurality of fuses;

B) An "L"-shaped sensor control module configured to be plugged into said fuse bar as a solitary unit, said sensor control module including an "L"-shaped base with a plurality of locking mechanisms and an "L"-shaped lid with a plurality of corresponding locking mechanisms, said "L"-shaped lid defining a plurality of apertures, the leg of the sensor control module including a plurality of outwardly extending string monitor terminals positioned in a line parallel to-said fuse bar with each of said string monitor terminals in a fixed position relative to each other while plugged into said fuse bar and while unplugged from said fuse bar, wherein each of said string monitor terminals is plugged into a corresponding fuse, and wherein said leg of the sensor control module includes bobbins, the quantity of said bobbins equal to the quantity of said fuses, and said bobbins each including a core comprised of at least two separate portions; and

C) A bus bar engaged with the foot of the "L", said bus bar parallel to, and engaged with, said fuse bar.

8. The monitoring system of claim **7** further comprising an RF controller in communication with said sensor control module, said RF controller including an antenna.

9. The monitoring system of claim **7** wherein said sensor module leg includes current sensors, the quantity of said current sensors equal to the quantity of said fuses.

10. The monitoring system of claim **9** wherein said current sensors are Hall effect sensors.

11. The monitoring system of claim **7** wherein said sensor module leg includes bobbins, the quantity of said bobbins equal to the quantity of said fuses, and said bobbins each including a screw assembly with a movable plate.

12. A system of collecting solar energy, said system including:

A) A plurality of solar panels, each solar panel in communication with a single (re)combiner box for aggregating DC power having a plurality of fixed fuses;

B) A single sensor control module configured to be plugged into said fixed fuses as a solitary unit, said sensor control module having a plurality of protruding rigid string monitor terminals positioned in a line with each of said string monitors in a fixed position relative to each other while plugged into said fixed fuses and while unplugged from said fixed fuses, each one of said string monitor terminals plugged into exactly one fixed fuse, said sensor control module in communication with said plurality of solar panels, and said sensor control module having a housing formed of a base with a plurality of locking mechanisms and a lid with corresponding locking mechanisms, said lid defining a plurality of apertures, said sensor control module located within and integrated with said (re)combiner box, and wherein said sensor control module includes bobbins, the quantity of said bobbins equal to the quantity of said fuses, and said bobbins each including a core comprised of at least two separate portions;

C) An RF antenna in communication with said sensor control module; and

D) At least one receiver in communication with said RF antenna.

13. The system of claim **12** wherein said at least one receiver is in communication with at least one processor.

14. The system of claim **12** further comprising at least one additional plurality of solar panels, said plurality and said additional plurality in communication one with another.

* * * * *