US005691724A

United States Patent [19]

Aker et al.

[11] Patent Number: 5,691,724

[45] Date of Patent: Nov. 25, 1997

[54] **POLICE TRAFFIC RADAR USING FFT PROCESSING TO FIND FASTEST TARGET**

[76] Inventors: **John L. Aker**, 820 W. 63rd. St., Kansas City, Mo. 64113; **Robert S. Gammenthaler**, Lot 28, Pecan Hills, Princeton, Tex. 75407; **Alan B. Mead**, 730 Ave. F, Plano, Tex. 75074-6752

[21] Appl. No.: **695,333**

[22] Filed: **Aug. 9, 1996**

Related U.S. Application Data

[63] Continuation of Ser. No. 386,552, Feb. 10, 1995, Pat. No. 5,570,093.

[51] **Int. Cl.**[6] **G01S 13/50**

[52] **U.S. Cl.** **342/104**; 342/115

[58] **Field of Search** 342/104, 115

[56] **References Cited**

U.S. PATENT DOCUMENTS

Re. 29,401	9/1977	Aker et al.	343/8
3,438,031	4/1969	Fathauer	342/92
3,689,921	9/1972	Berry	343/8
3,936,824	2/1976	Aker et al.	343/8
4,214,243	7/1980	Patterson	343/8
4,236,140	11/1980	Aker et al.	343/8
4,293,859	10/1981	Sergent	343/702
4,335,382	6/1982	Brown et al.	343/8
4,335,383	6/1982	Berry	343/8
4,740,045	4/1988	Goodson et al.	342/112
4,743,908	5/1988	Brassfield et al.	342/113
5,504,488	4/1996	Henderson et al.	342/115
5,525,996	6/1996	Aker et al.	342/104
5,528,245	6/1996	Aker et al.	342/115
5,528,246	6/1996	Henderson et al.	342/115
5,563,603	10/1996	Aker et al.	342/115
5,565,871	10/1996	Aker et al.	342/176
5,570,093	10/1996	Aker et al.	342/104

OTHER PUBLICATIONS

Westlaw Search, Nov. 14, 1994.

Craig Peterson, "Speed Enforcement Technology", An explanation of the latest features and capabilities of speed detection equipment, *Law and Order*, vol. 41, No. 9, Sep. 1993, pp. 32–41.

MPH L55 Lasar, Description and Specifications, M.P.H. Industries, Inc. pp. 1–8.

MPH L–55 Lasar brochure with Stealth Instruction Manual, M.P.H. Industries, Inc., pp. 1–6.

Applied Concepts brochure on Stalker ATR, The First Major Innovation in Traffic Speed Radar in Ten Years, 4 pages.

Kustom Signals, Inc., H.A.W.K. Traffic Safety Radar brochure, 4 pages.

Muni quip MDR–1 X–Band Moving Track Radar brochure, 2 pages.

Primary Examiner—John B. Sotomayor

Attorney, Agent, or Firm—Ron Fish; Falk & Fish LLP

[57] **ABSTRACT**

A police radar utilizing digital data transmission from the antenna unit to a separately housed counting and display unit. The antenna has a double balanced mixer to suppress even order harmonics. The counting and display unit has a computer programmed to perform digital signal processing on the digital data received from the antenna to improve the quality and accuracy of calculated speeds for patrol speed, strongest target speed and fastest target speed. Fastest target speed can be displayed simultaneously with strongest target speed. Signal processing techniques are used to suppress false signals caused by double and triple bounce, harmonics, intermodulation products, video display terminal interference, etc.

19 Claims, 48 Drawing Sheets

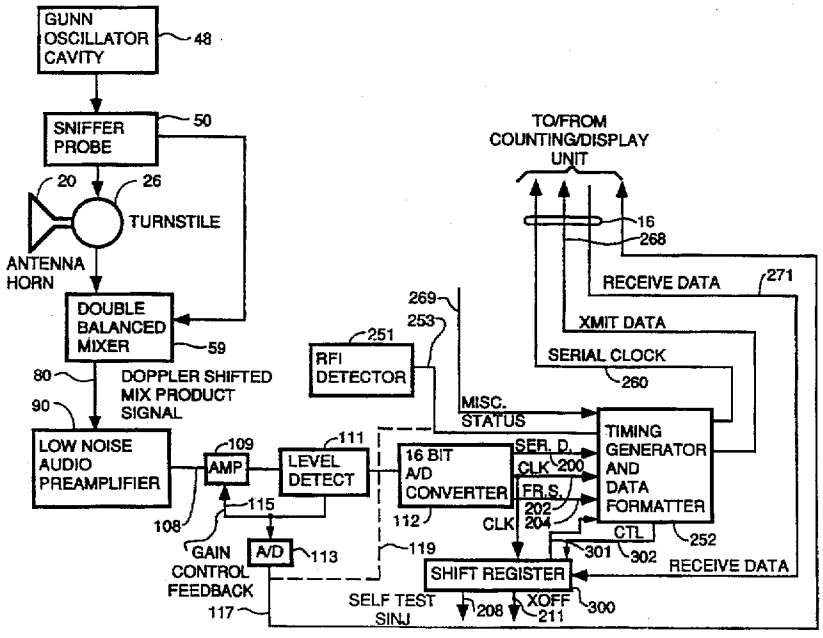

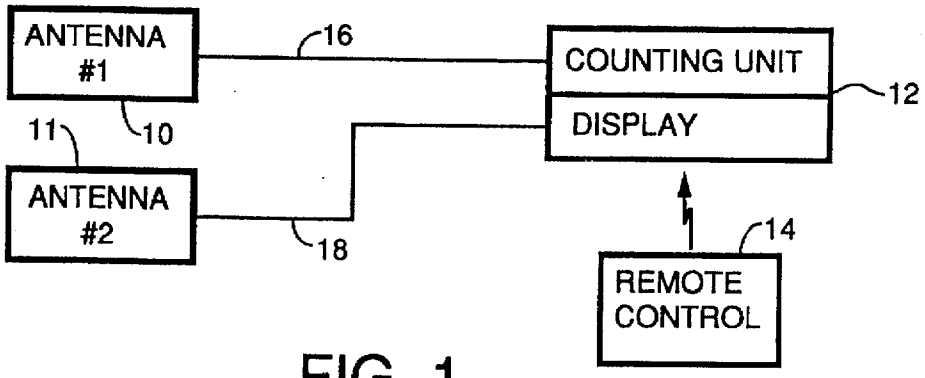

FIG. 1

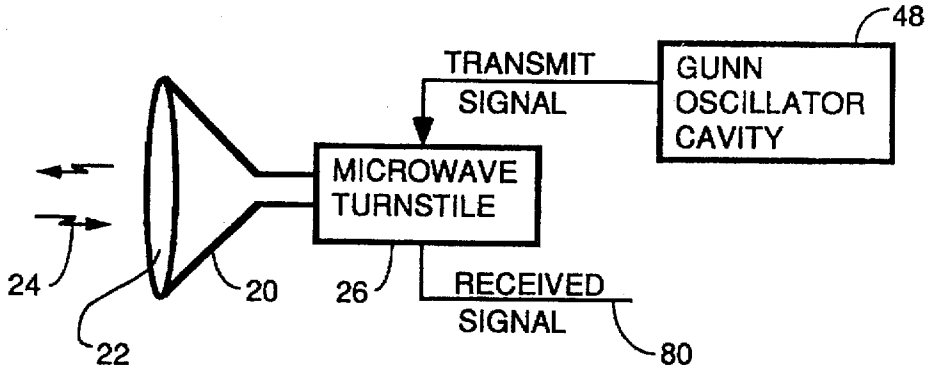

FIG. 2

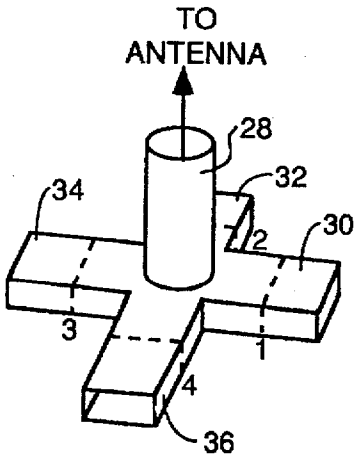

FIG. 3

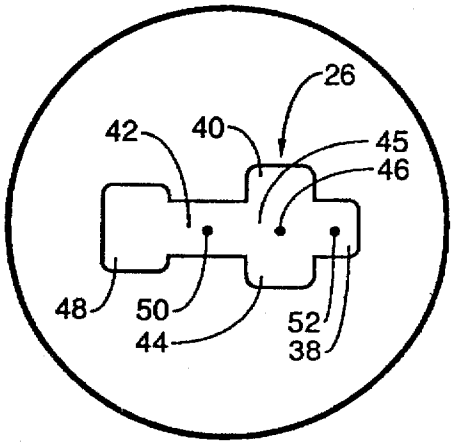

FIG. 4

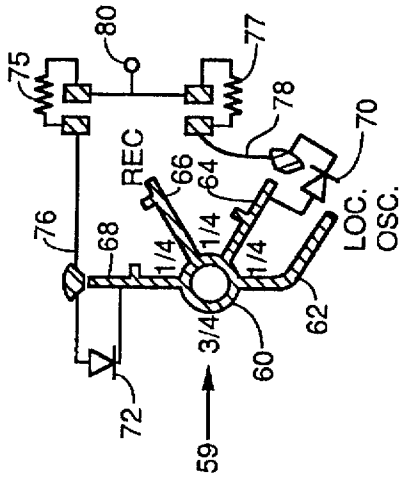
75
80
77
78
70
REC
66
64
76
68
1/4
1/4
1/4
LOC.
OSC.
3/4
60
62
72
59

FIG. 5

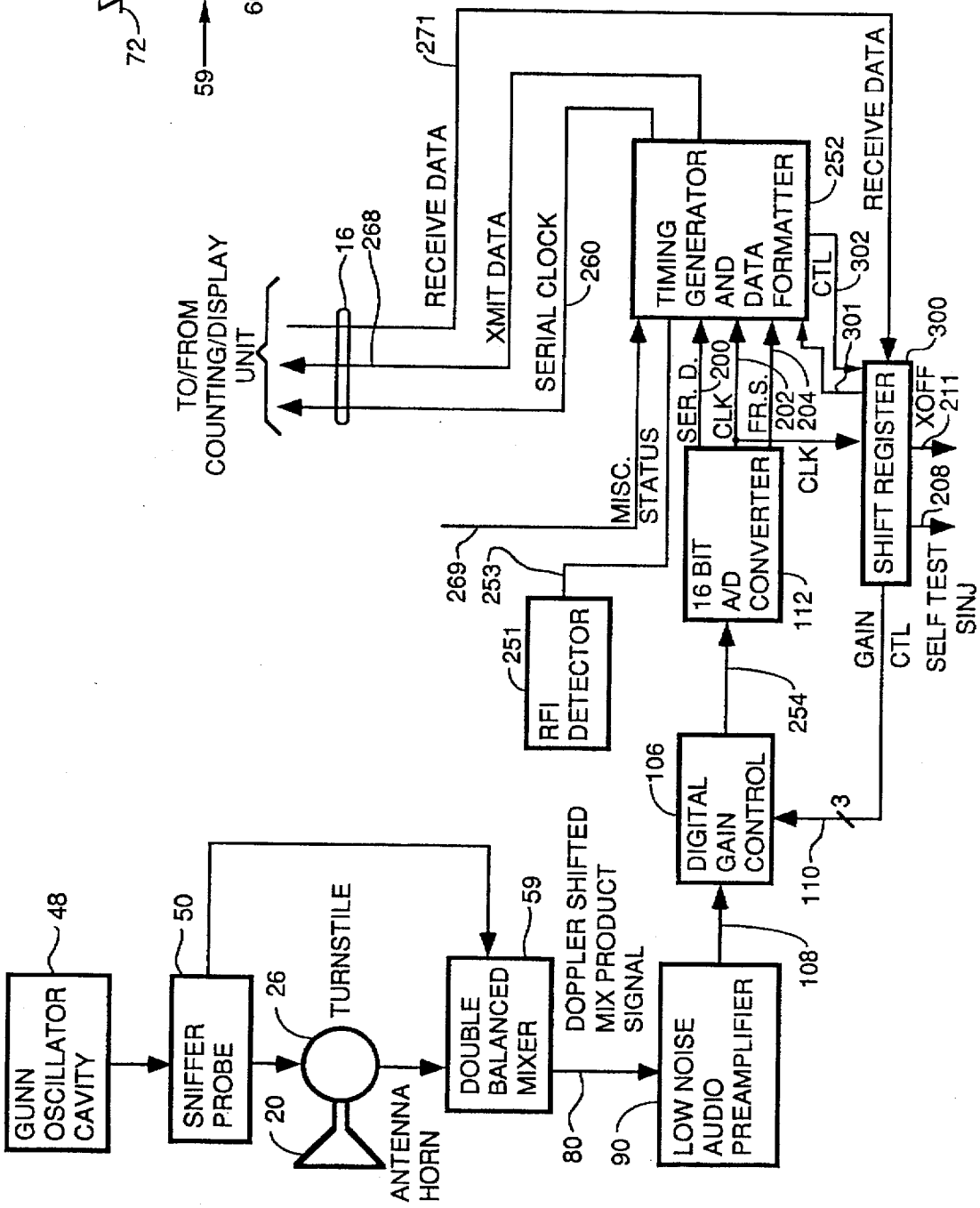
GUNN
OSCILLATOR
CAVITY
48
SNIFFER
PROBE
50
TURNSTILE
26
20
ANTENNA
HORN
DOUBLE
BALANCED
MIXER
59
DOPPLER SHIFTED
MIX PRODUCT
SIGNAL
80
90
LOW NOISE
AUDIO
PREAMPLIFIER
108
DIGITAL
GAIN
CONTROL
106
110
3
254
16 BIT
A/D
CONVERTER
112
RFI
DETECTOR
251
253
269
MISC.
STATUS
SER. D.
CLK
200
FR.S.
202
204
CLK
TIMING
GENERATOR
AND
DATA
FORMATTER
252
CTL
302
301
RECEIVE DATA
271
XMIT DATA
SERIAL CLOCK
260
RECEIVE DATA
SHIFT REGISTER
300
XOFF
211
208
GAIN
CTL
SELF TEST
SINJ
TO/FROM
COUNTING/DISPLAY
UNIT
16
268

FIG. 6

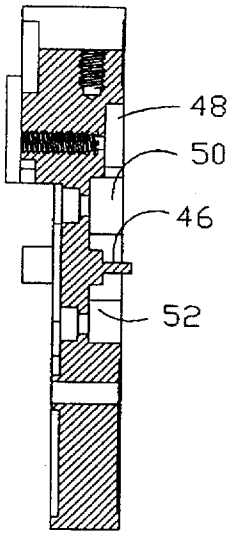

FIG. 8

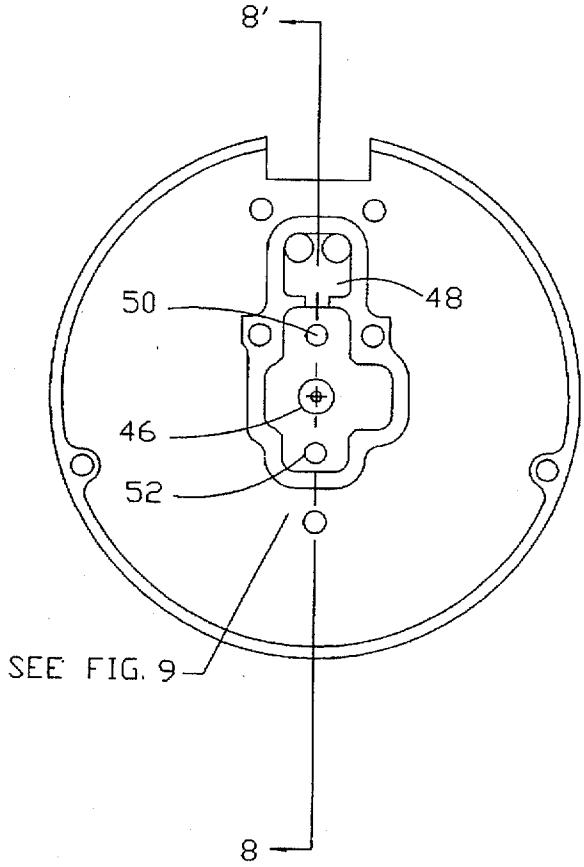

FIG. 7

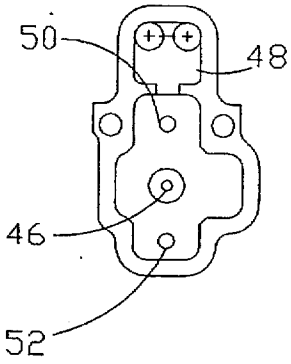

FIG. 9

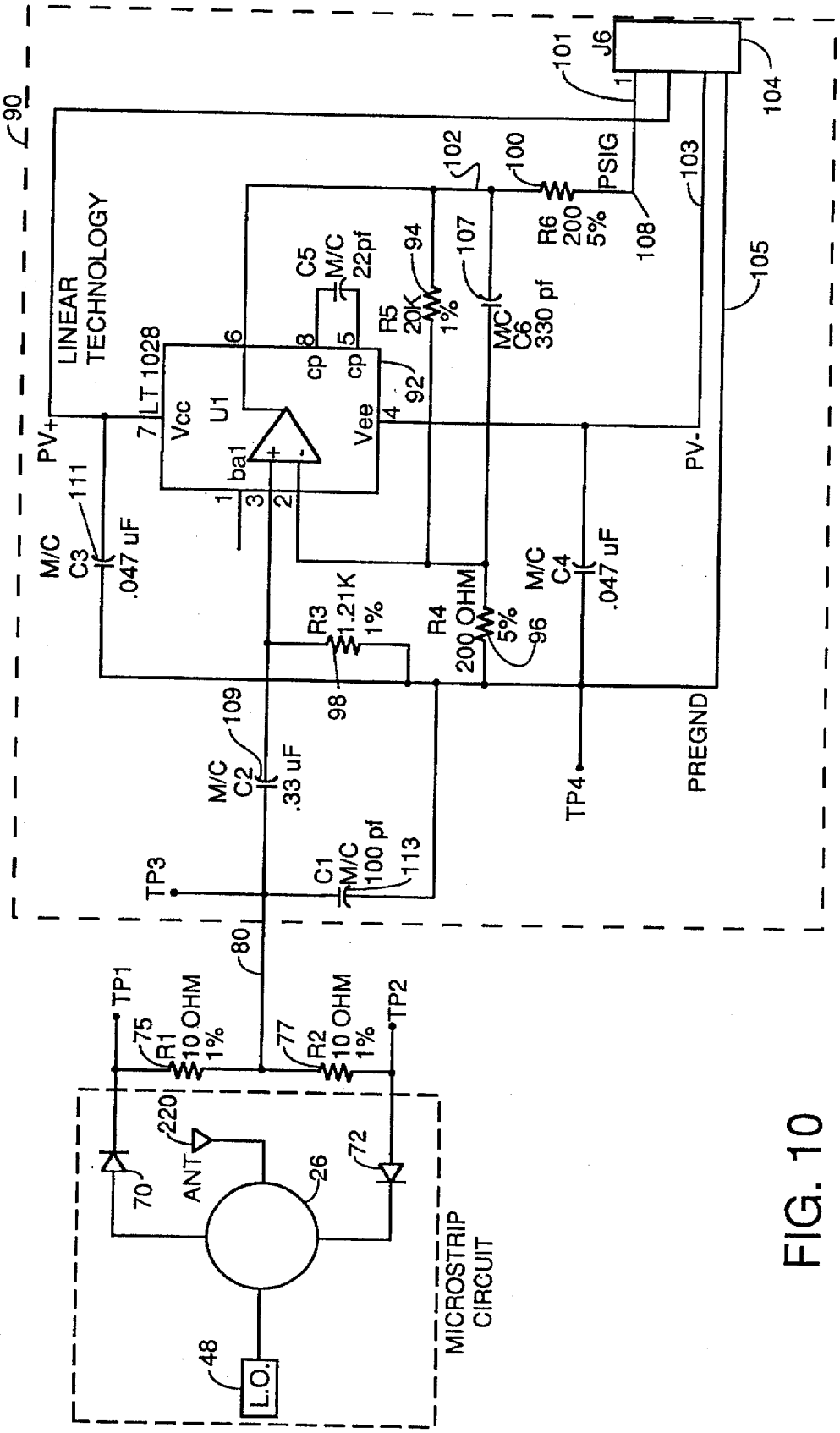
90
LINEAR TECHNOLOGY
LT 1028
U1
Vcc
Vee
ba1
cp
cp
PV+
PV-
PSIG
J6
101
102
103
104
105
100
R6 200 5%
108
107
M/C C6 330 pf
94
R5 20K 1%
C5 M/C 22pf
92
M/C C3 .047 uF
111
M/C C4 .047 uF
R3 1.21K 1%
98
R4 200 OHM 5%
96
M/C C2 .33 uF
109
C1 M/C 100 pf
113
TP3
TP4
PREGND
80
TP1
TP2
R1 10 OHM 1%
75
R2 10 OHM 1%
77
220
ANT
70
72
26
48
L.O.
MICROSTRIP CIRCUIT

FIG. 10

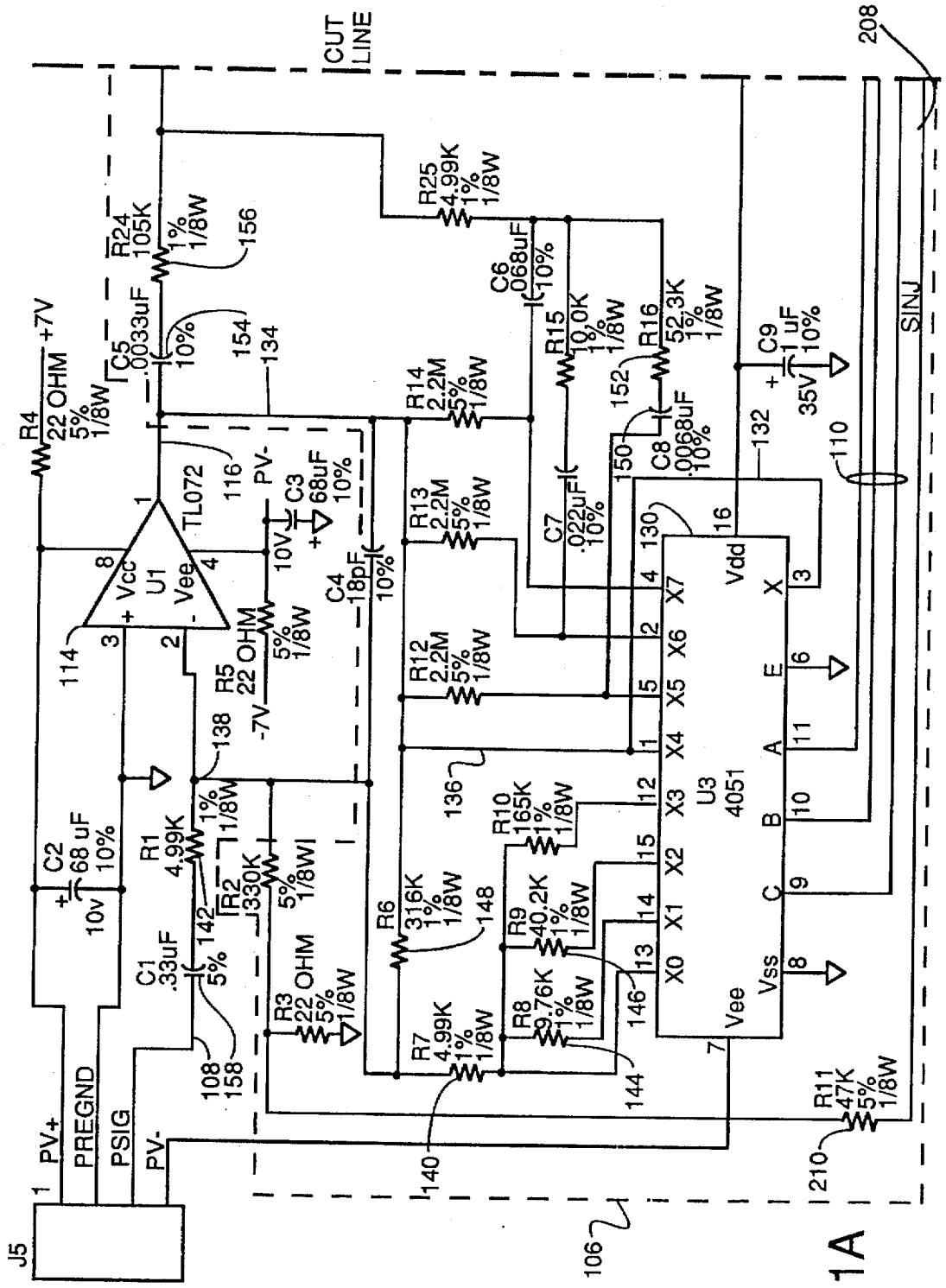
CUT LINE
208
R25 4.99K 1% 1/8W
R24 105K 1% 1/8W
156
C6 .068uF 10%
R15 10.0K 1% 1/8W
R16 52.3K 1% 1/8W
C9 1 uF 10% 35V
SINJ
R4 22 OHM 5% 1/8W
+7V
C5 .0033uF 10%
154
134
R14 2.2M 5% 1/8W
152
C8 .0068uF 10%
132
110
150
C7 .022uF 10%
TL072
116
PV-
C3 68uF 10%
10V
R13 2.2M 5% 1/8W
130
Vdd
U1
Vcc
Vee
114
C4 18pF 10%
R5 22 OHM 5% 1/8W
-7V
R12 2.2M 5% 1/8W
X7
X6
X5
X4
X3
X2
X1
X0
Vee
Vss
U3
4051
X
E
A
B
C
136
138
R10 165K 1% 1/8W
C2 68 uF 10% 10v
R1 4.99K 1% 1/8W
R2 330K 5% 1/8W
142
R6 316K 1% 1/8W
148
R9 40.2K 1% 1/8W
C1 .33uF 5%
R3 22 OHM 5% 1/8W
R8 9.76K 1% 1/8W
146
R7 4.99K 1% 1/8W
144
108
158
140
R11 47K 5% 1/8W
210
PV+
PREGND
PSIG
PV-
J5
106

FIG. 11A

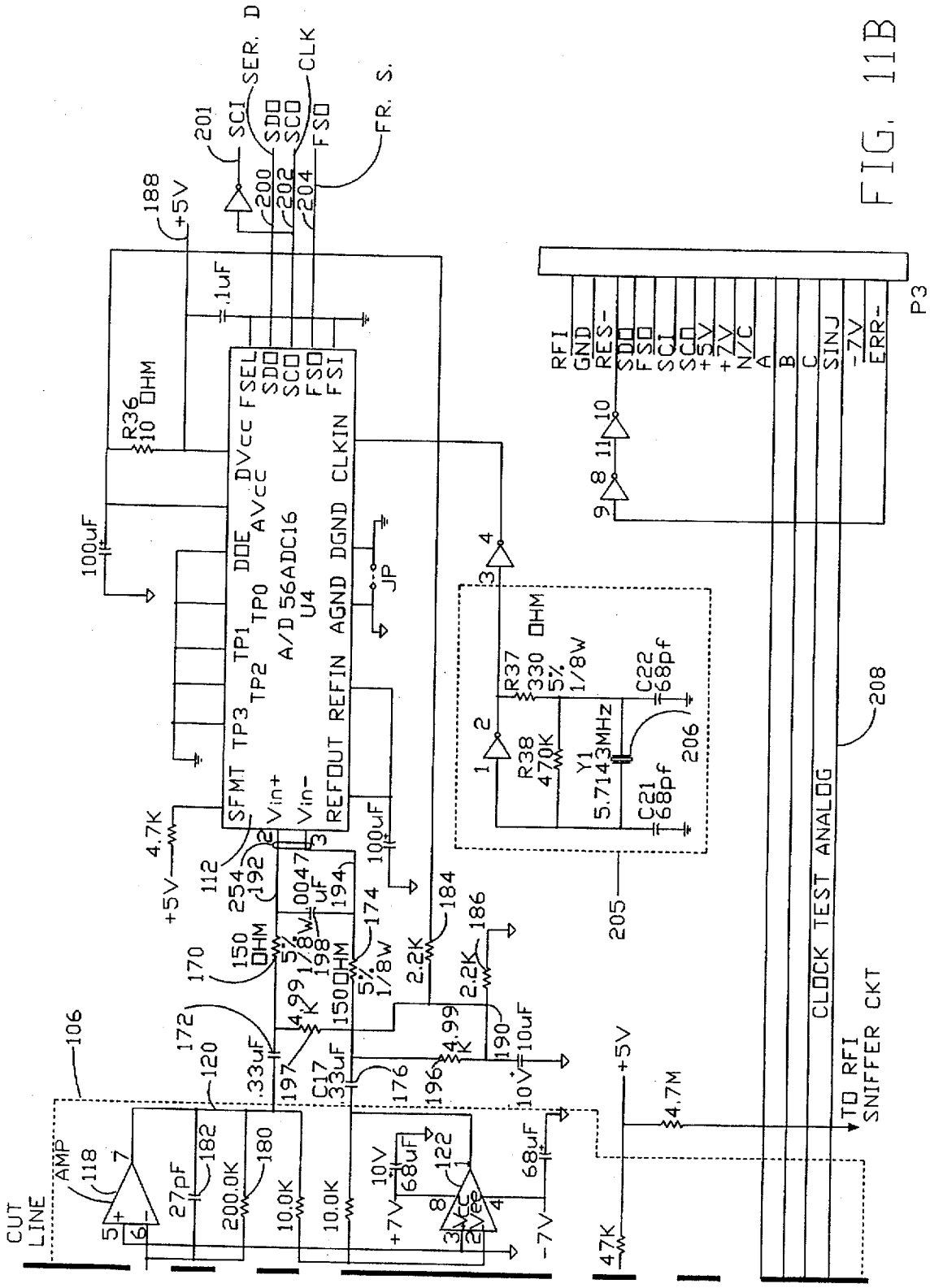
CUT LINE
AMP
118
106
120
172
27pF
182
200.0K
180
10.0K
10.0K
10V
68uF
122
+7V
-7V
68uF
47K
+5V
4.7M
TO RFI SNIFFER CKT
CLOCK TEST ANALOG
208
205
206
Y1
5.7143MHz
R37
330 OHM
5%
1/8W
R38
470K
C22
68pf
C21
68pf
R36
10 OHM
100uF
188
+5V
.1uF
201
SCI
SER. D
SDO
SCO
CLK
FSO
FR. S.
200
202
204
SFMT
TP3
TP2
TP1
TP0
DOE
AVcc
DVcc
FSEL
SDO
SCO
FSO
FSI
A/D 56ADC16
U4
Vin+
Vin-
REFOUT
REFIN
AGND
DGND
CLKIN
JP
112
254
192
.0047 uF
194
150 OHM
5%
1/8W
170
174
184
186
2.2K
2.2K
4.99 K
150 OHM
5%
1/8W
4.99 K
190
10uF
.33uF
197
C17
33uF
176
196
10V
+5V
4.7K
100uF
RFI
GND
RES-
SDO
FSO
SCI
SCO
+5V
+7V
N/C
A
B
C
SINJ
-7V
ERR-
P3

FIG. 11B

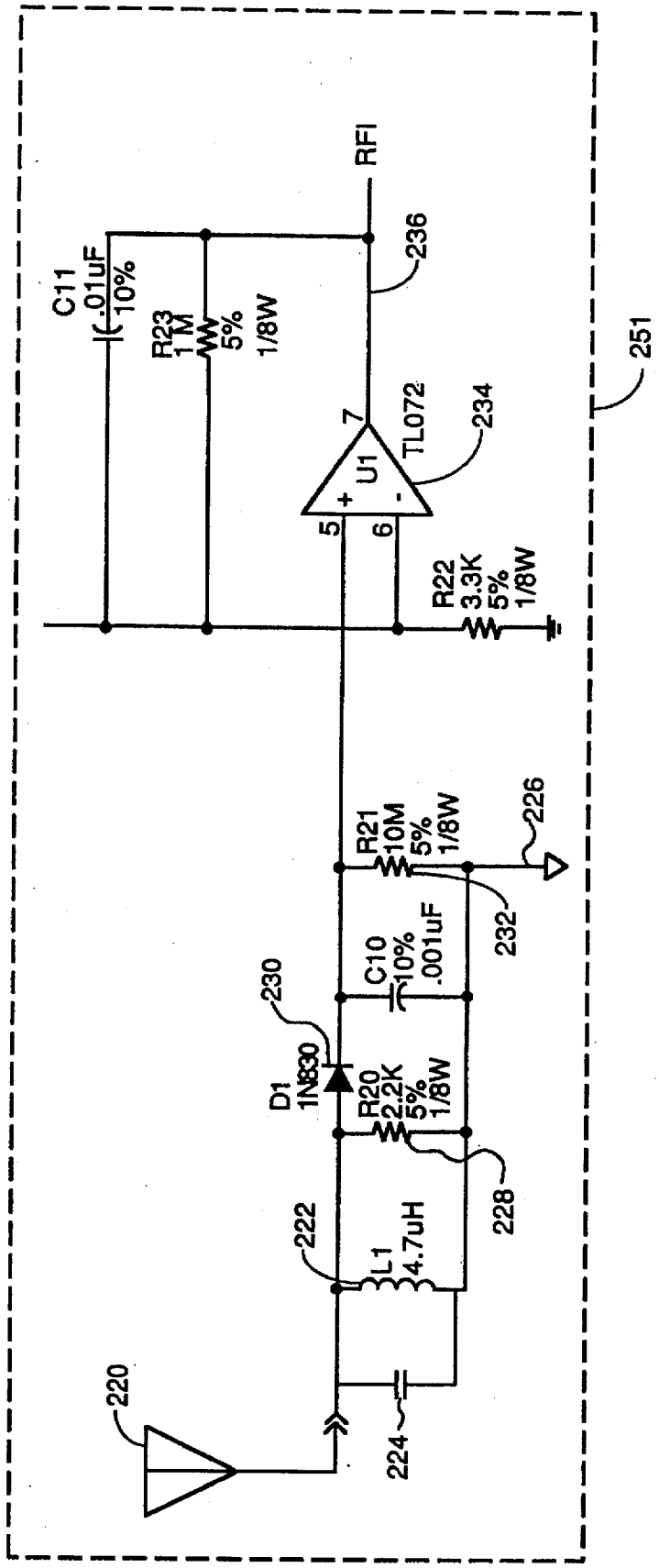
C11
.01uF
10%
R23
1M
5%
1/8W
RFI
236
251
7
U1
TL072
234
5
6
R22
3.3K
5%
1/8W
R21
10M
5%
1/8W
226
232
C10
10%
.001uF
230
D1
1N830
R20
2.2K
5%
1/8W
228
222
L1
4.7uH
220
224

FIG. 12

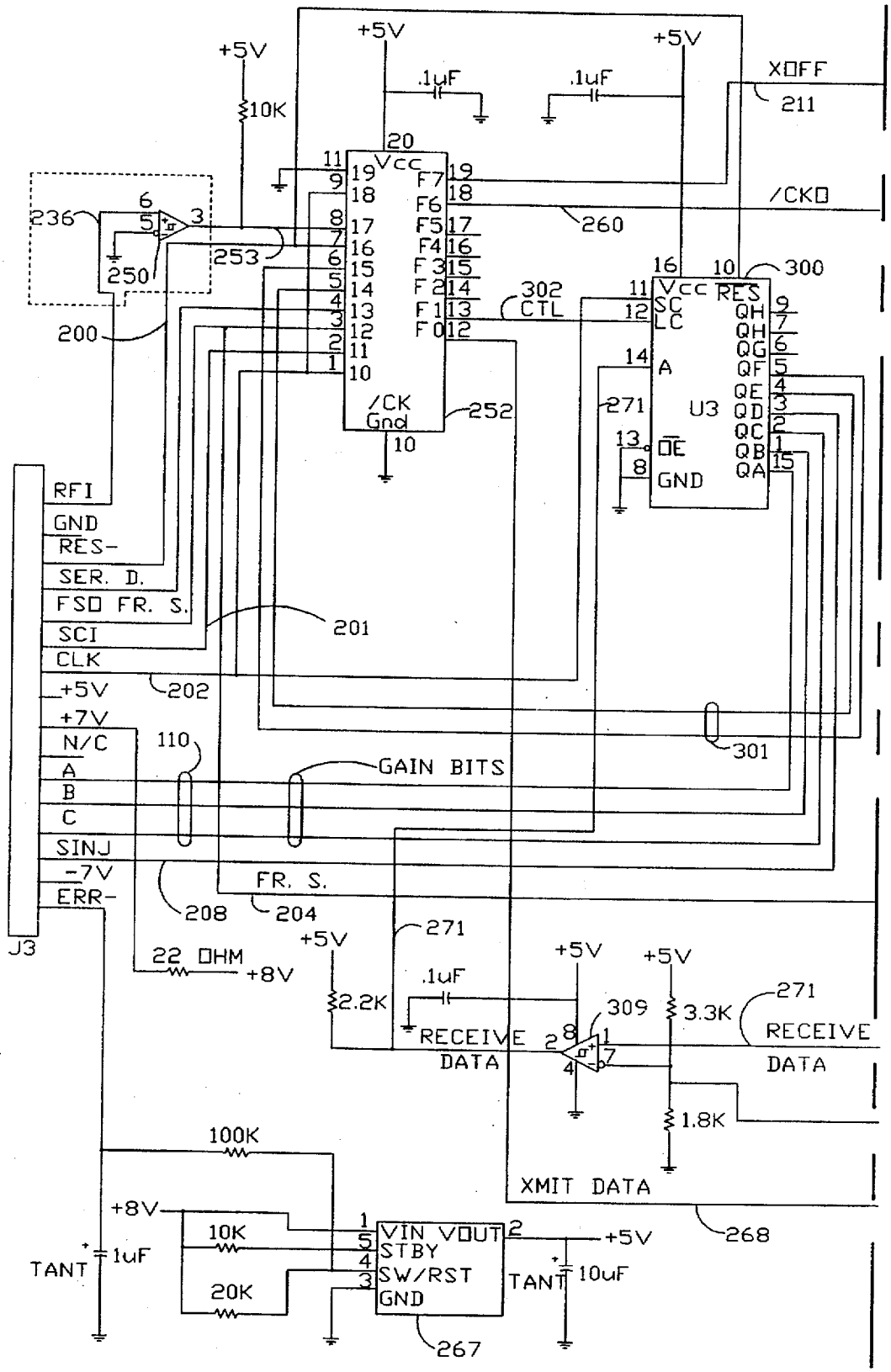

FIG. 13A

CUT LINE

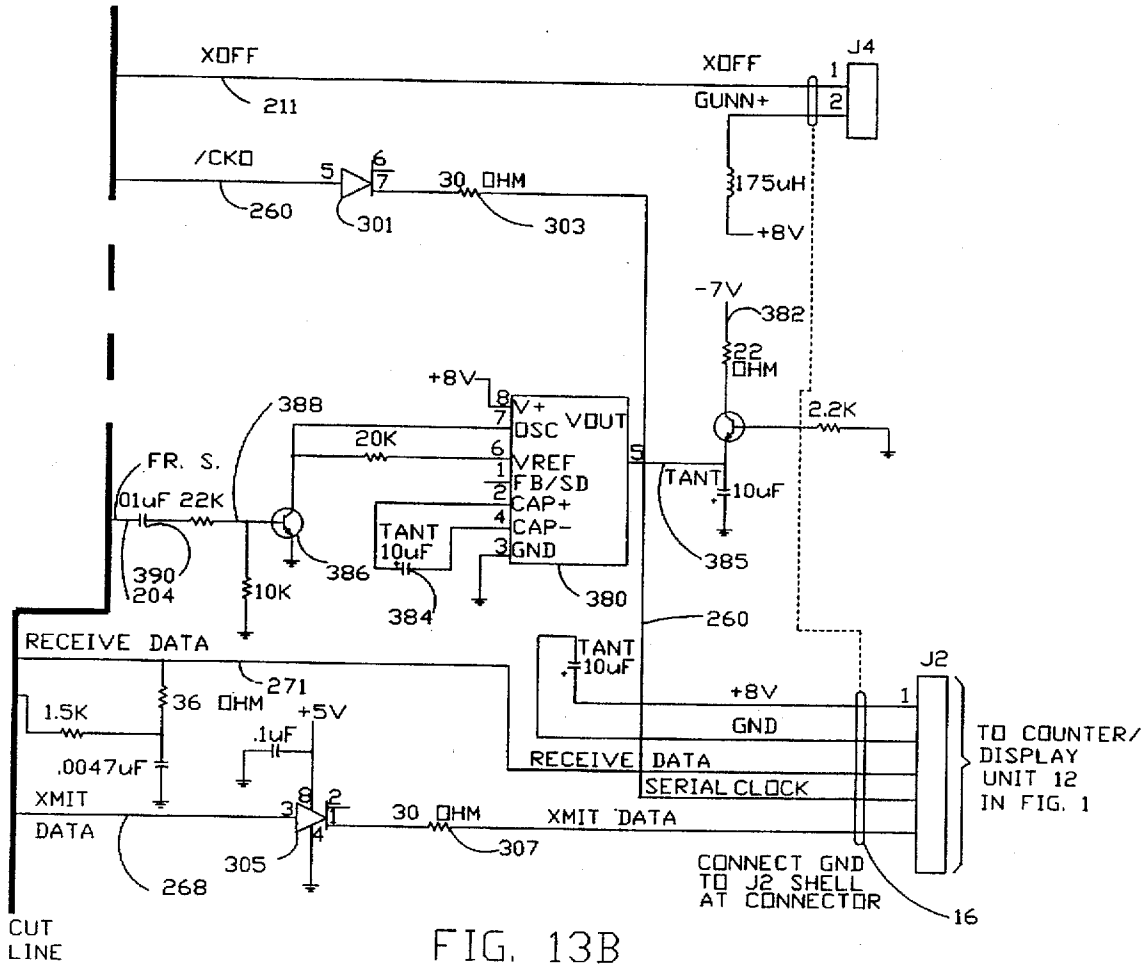
XOFF
211
XOFF
GUNN+
J4
/CKO
260
301
30 OHM
303
175uH
+8V
-7V
382
22 OHM
2.2K
+8V
388
20K
FR. S.
01uF 22K
390
204
10K
386
TANT
10uF
384
V+
OSC
VOUT
VREF
FB/SD
CAP+
CAP-
GND
380
TANT
10uF
385
260
RECEIVE DATA
271
36 OHM
1.5K
.0047uF
+5V
.1uF
XMIT
DATA
268
305
30 OHM
307
XMIT DATA
TANT
10uF
+8V
GND
RECEIVE DATA
SERIAL CLOCK
J2
TO COUNTER/
DISPLAY
UNIT 12
IN FIG. 1
CONNECT GND
TO J2 SHELL
AT CONNECTOR
16
CUT
LINE

FIG. 13B

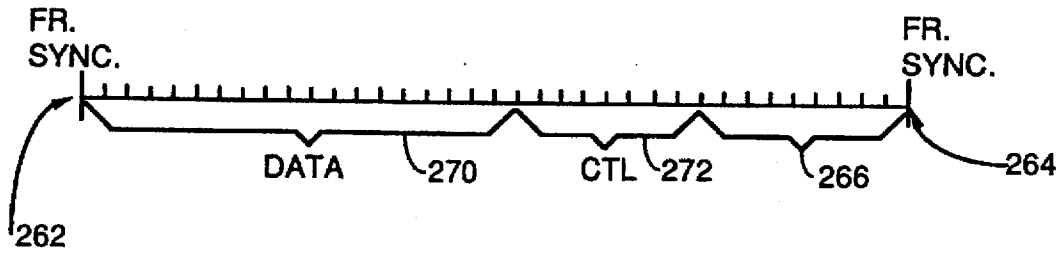

FIG. 14

Chip antga16 PAL16R4

1	2	3	4	5	6	7	8	9	10	← PIN #
clk	cki	fso	adc	i4	i5	/res	rfi	ck	gnd	← SIGNAL

/en	/dout	lc	/A	/B	/C	/D	/cko	xoff	vcc	← SIGNAL
11	12	13	14	15	16	17	18	19	20	← PIN #

equations

```
cko = /ck * /fso
    + /ck * A * /D
    + /ck * B
    + /ck * C
    + /ck * /A * D
cko.oe = vcc

A := /fso + /A * B + /A * C + /A * D
B := fso * A * /B * /D + /A * B
C := A * B * /C + /A * C + /B * C
D := A * B * C * /D + /A * /B * /C * D
dout = adc * /D * /C
     + rfi * /ck * /A * B * C * /D
     + rfi * ck * A * B * C * /D
     + cki * /A * /B * /C * D
     + /cki * A * /B * /C * D
dout.oe = vcc
/1c = /cki * ck * A * /B * /C * D
1c.oe = vcc
/xoff = /res * i4 * /i5
xoff.oe = vcc
```

FIG. 15A

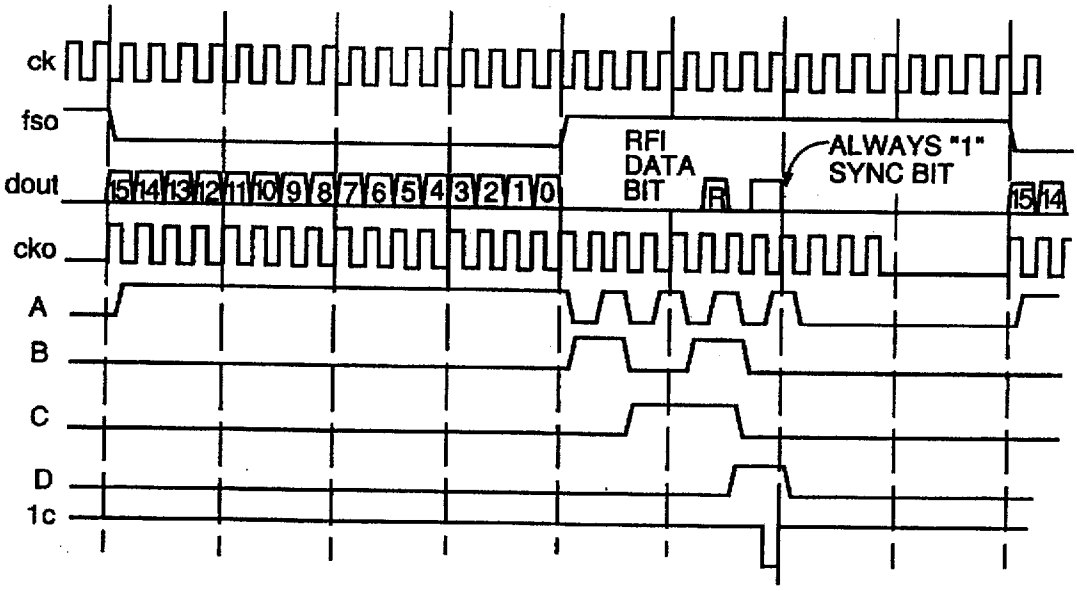

FIG. 15B

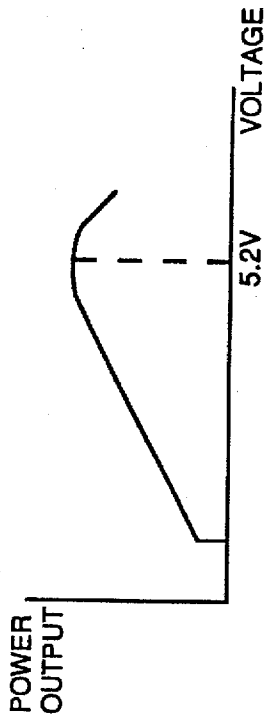
POWER OUTPUT
5.2V
VOLTAGE

FIG. 17

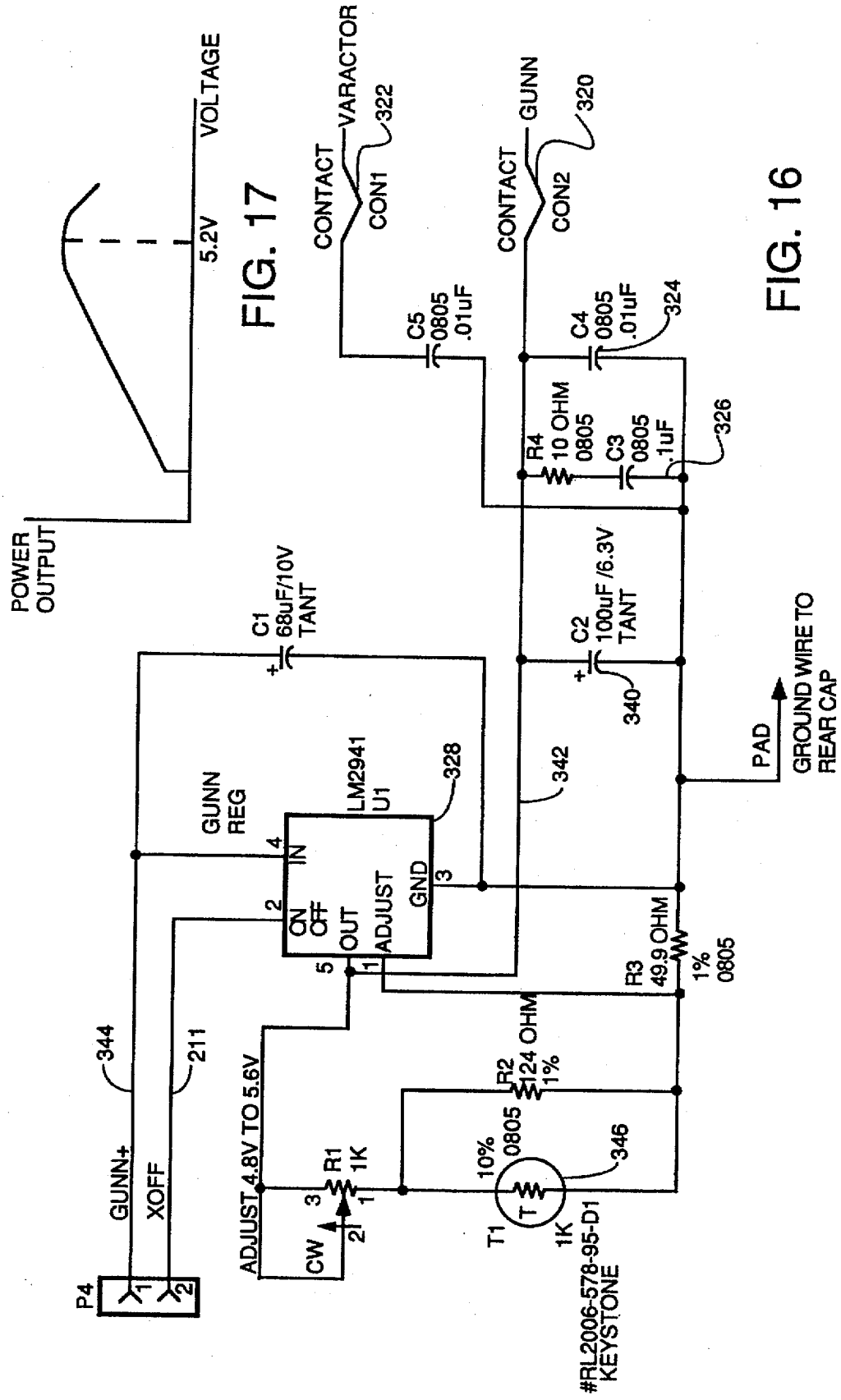
CONTACT
VARACTOR
CON1
322
CONTACT
GUNN
CON2
320
C5
0805
.01uF
C4
0805
.01uF
324
R4
10 OHM
0805
C3
0805
.1uF
326
C1
68uF/10V
TANT
C2
100uF /6.3V
TANT
340
342
PAD
GROUND WIRE TO REAR CAP
GUNN REG
LM2941
U1
328
IN
ON
OFF
OUT
ADJUST
GND
R3
49.9 OHM
1%
0805
R2
124 OHM
1%
10%
0805
346
T1
1K
#RL2006-578-95-D1
KEYSTONE
ADJUST 4.8V TO 5.6V
R1
1K
CW
344
211
GUNN+
XOFF
P4

FIG. 16

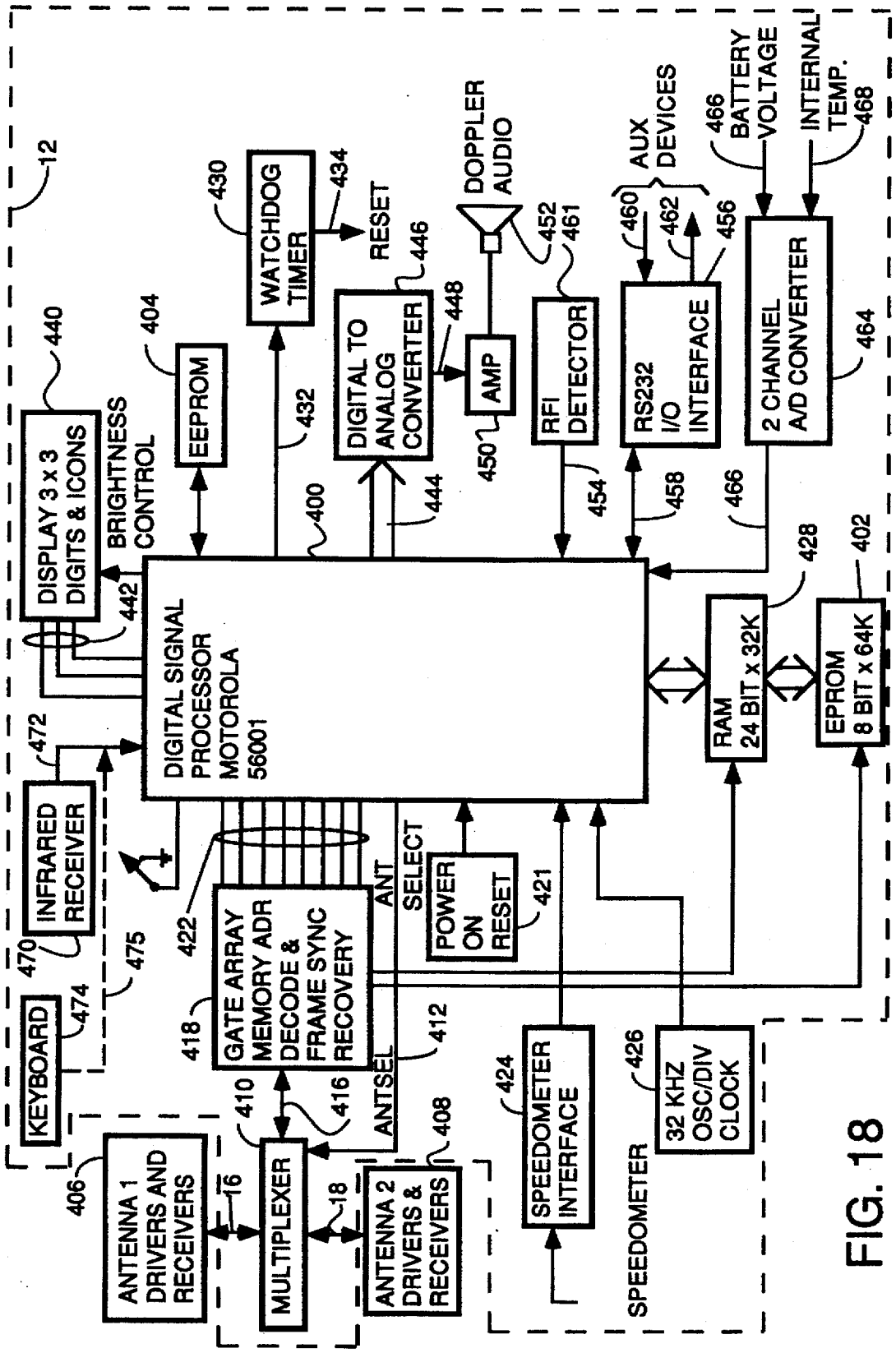
12
DISPLAY 3 x 3 DIGITS & ICONS
440
BRIGHTNESS CONTROL
442
EEPROM
404
WATCHDOG TIMER
430
434
RESET
432
DIGITAL TO ANALOG CONVERTER
446
448
AMP
450
DOPPLER AUDIO
452
RFI DETECTOR
461
454
RS232 I/O INTERFACE
460
462
456
458
AUX DEVICES
2 CHANNEL A/D CONVERTER
464
466
BATTERY VOLTAGE
INTERNAL TEMP.
468
400
444
DIGITAL SIGNAL PROCESSOR MOTOROLA 56001
428
RAM 24 BIT x 32K
402
EPROM 8 BIT x 64K
472
INFRARED RECEIVER
470
475
KEYBOARD
474
422
GATE ARRAY MEMORY ADR DECODE & FRAME SYNC RECOVERY
418
ANT
SELECT
POWER ON RESET
421
ANTSEL
412
410
416
408
424
SPEEDOMETER INTERFACE
426
32 KHZ OSC/DIV CLOCK
406
ANTENNA 1 DRIVERS AND RECEIVERS
16
MULTIPLEXER
18
ANTENNA 2 DRIVERS & RECEIVERS
SPEEDOMETER

FIG. 18

```
; Stalker II processor GAL #1 equations 10/21/93

chip prcgal1 PAL16R4
 1   2   3   4   5   6   7   8   9  10   <---- 484
clk sck ds ps xy a15 a14 a13 i8 gnd   <---- 480
/en promcs ramad13 /A /B /C /D ramcs sc2 vcc   <---- 482
 11  12      13     14 15 16 17  18   19  20   <---- 486

equations
;15 count resettable one-shot
A := sck + /A * B + /A * C + /A * D          ;sck presets to state 1
B := A * /B * /sck + /A * B * /sck
C := A * B * /C * /sck + /A * C */sck + /B * C * /sck
D := A * B * C * /D * /sck + /C * D * /sck + /B * D * /sck + /A * D * /sck
/sc2 = /A * /B * /C * /D * /sck          ;output when state 0 reached
sc2.oe = vcc
; prom selected from P:$8000 to $FFFF
/promcs = /ps * ds * a15
promcs.oe = vcc
;P:ram 0 to $3FFF, X: & Y: to $1FFF
/ramcs = /ps * ds * /a14 * /a15 + ps * /ds * /a13 * /a14 * /a15
ramcs.oe = vcc
/ramad13 = /ps * ds * /a13 + ps * /ds * xy
;ramad13.oe = vcc
```

FIG. 19

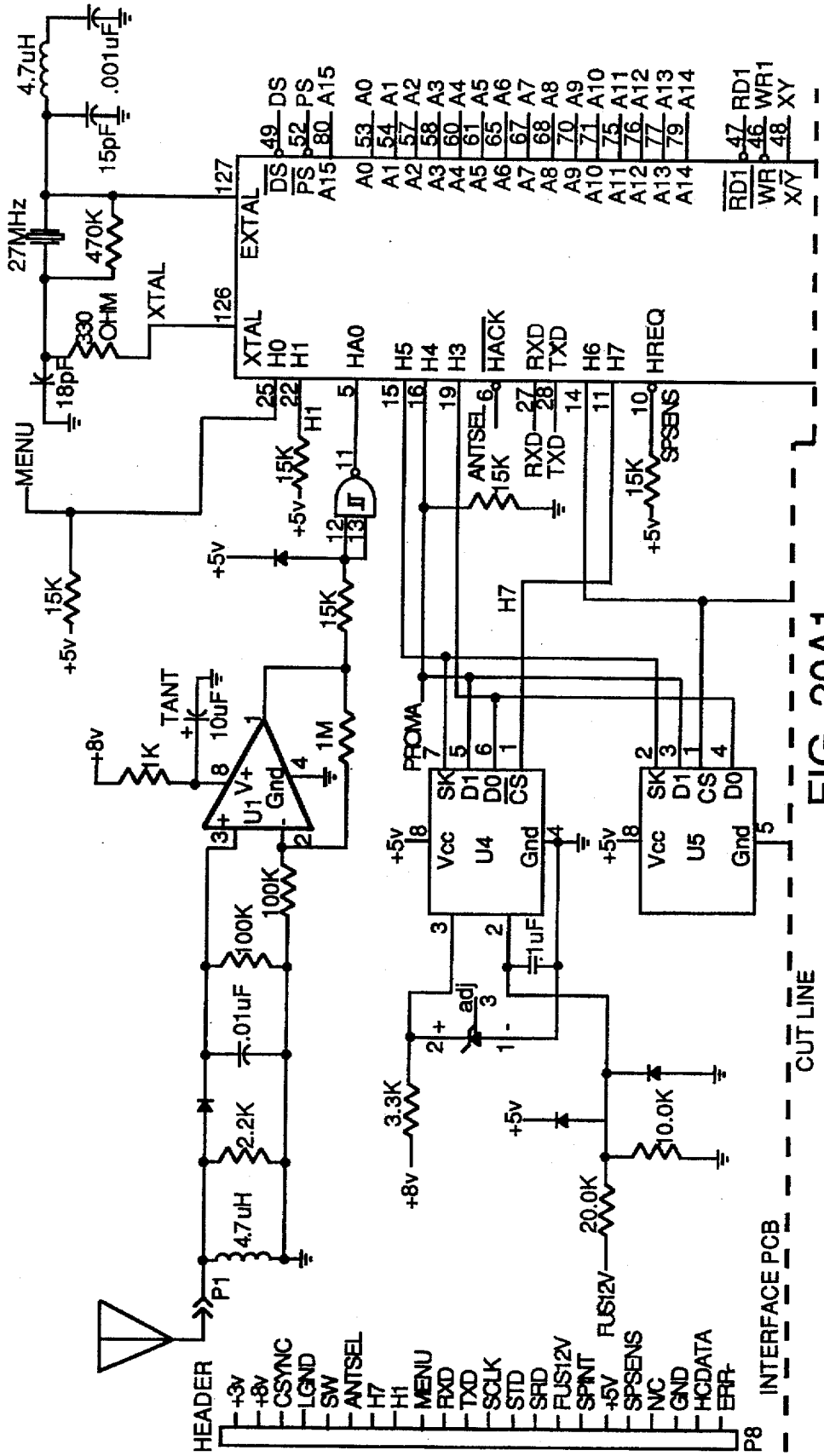
4.7uH
.001uF
15pF
27MHz
470K
XTAL
330 OHM
18pF
MENU
15K
+5v
+8v
1K
TANT
10uF
U1
V+
Gnd
1M
100K
.01uF
2.2K
4.7uH
P1
HEADER
+3v
+8v
CSYNC
LGND
SW
ANTSEL
H7
H1
MENU
RXD
TXD
SCLK
STD
SRD
FUS12V
SPINT
+5V
SPSENS
NC
GND
HCDATA
ERR-
P8
INTERFACE PCB
EXTAL
XTAL
H0
H1
HA0
H5
H4
H3
HACK
RXD
TXD
H6
H7
HREQ
DS
PS
A15
A0
A1
A2
A3
A4
A5
A6
A7
A8
A9
A10
A11
A12
A13
A14
RD1
WR
X/Y
ANTSEL
SPSENS
PROMA
SK
D1
D0
CS
Vcc
U4
U5
Gnd
1uF
adj
3.3K
+8v
20.0K
10.0K
FUS12V
CUT LINE

FIG. 20A1

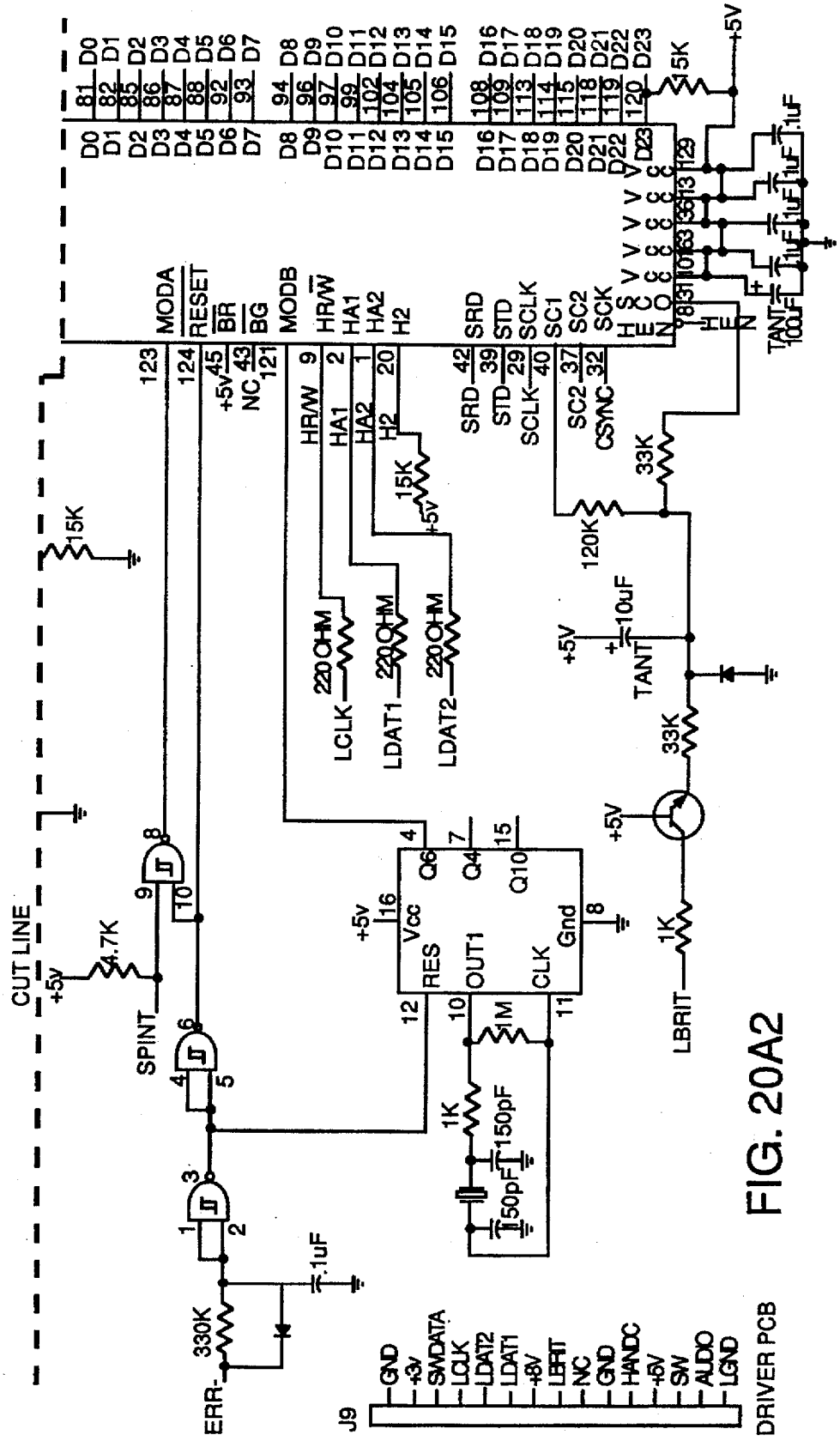
CUT LINE
+5v
4.7K
SPINT
ERR-
330K
.1uF
15K
MODA
RESET
BR
BG
MODB
HR/W
HA1
HA2
H2
SRD
STD
SCLK
SC1
SC2
SCK
CSYNC
LCLK
LDAT1
LDAT2
220 OHM
120K
33K
10uF
TANT
1K
LBRIT
Vcc
RES
OUT1
CLK
Gnd
Q6
Q4
Q10
1M
150pF
J9
GND
+3v
SMDATA
LCLK
LDAT2
LDAT1
+8V
LBRIT
NC
GND
HANDC
+6V
SW
AUDIO
LGND
DRIVER PCB

FIG. 20A2

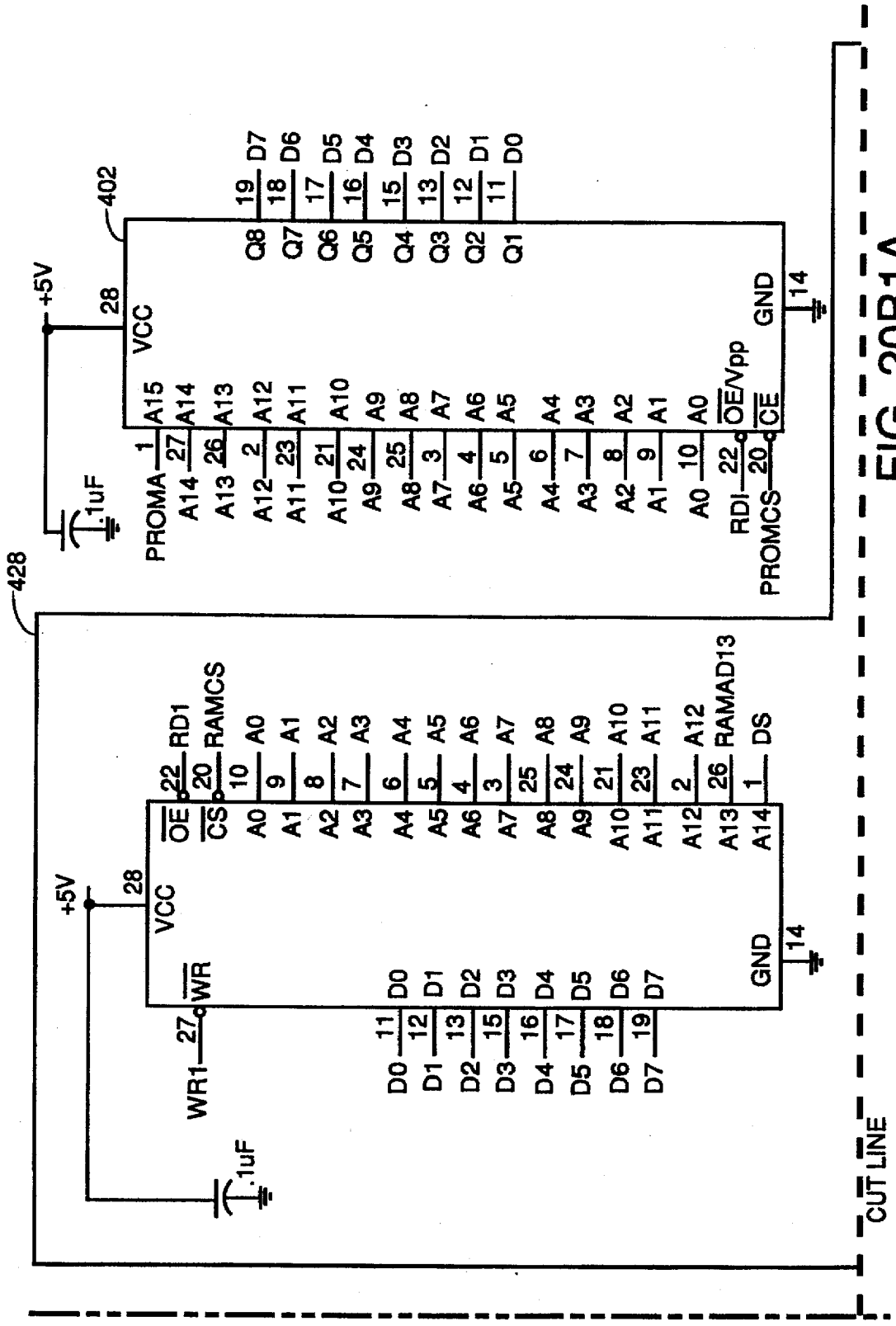
402
+5V
28
VCC
.1uF
PROMA
A15
A14
A13
A12
A11
A10
A9
A8
A7
A6
A5
A4
A3
A2
A1
A0
RDI
PROMCS
OE/Vpp
CE
GND
14
Q8
Q7
Q6
Q5
Q4
Q3
Q2
Q1
D7
D6
D5
D4
D3
D2
D1
D0
428
OE
CS
RD1
RAMCS
RAMAD13
DS
WR
WR1
CUT LINE

FIG. 20B1A

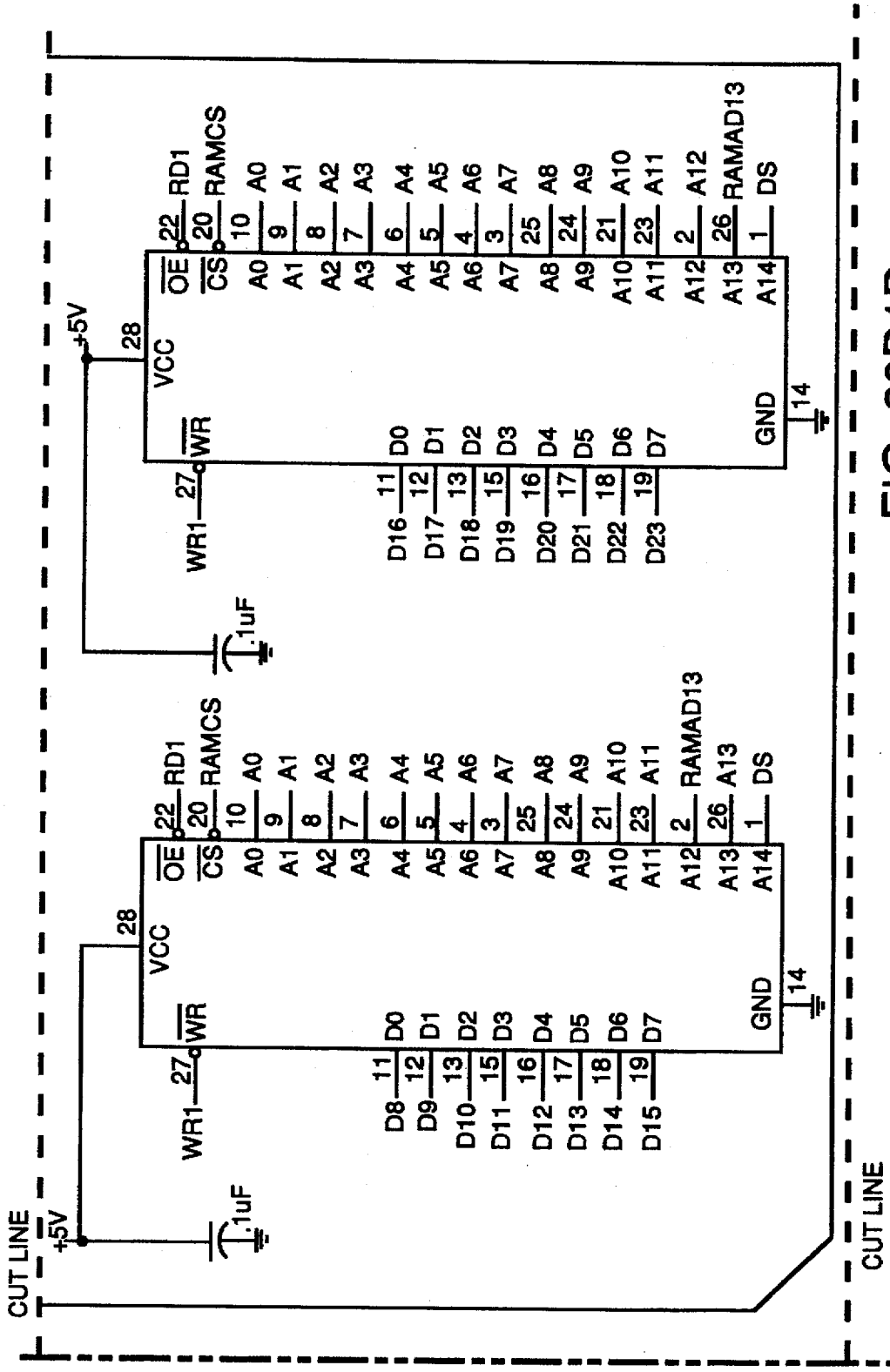
CUT LINE
+5V
.1uF
WR1
27
28
VCC
WR
OE
CS
RD1
RAMCS
A0
A1
A2
A3
A4
A5
A6
A7
A8
A9
A10
A11
A12
A13
A14
RAMAD13
DS
GND
14
D0
D1
D2
D3
D4
D5
D6
D7
D8
D9
D10
D11
D12
D13
D14
D15
D16
D17
D18
D19
D20
D21
D22
D23
CUT LINE

FIG. 20B1B

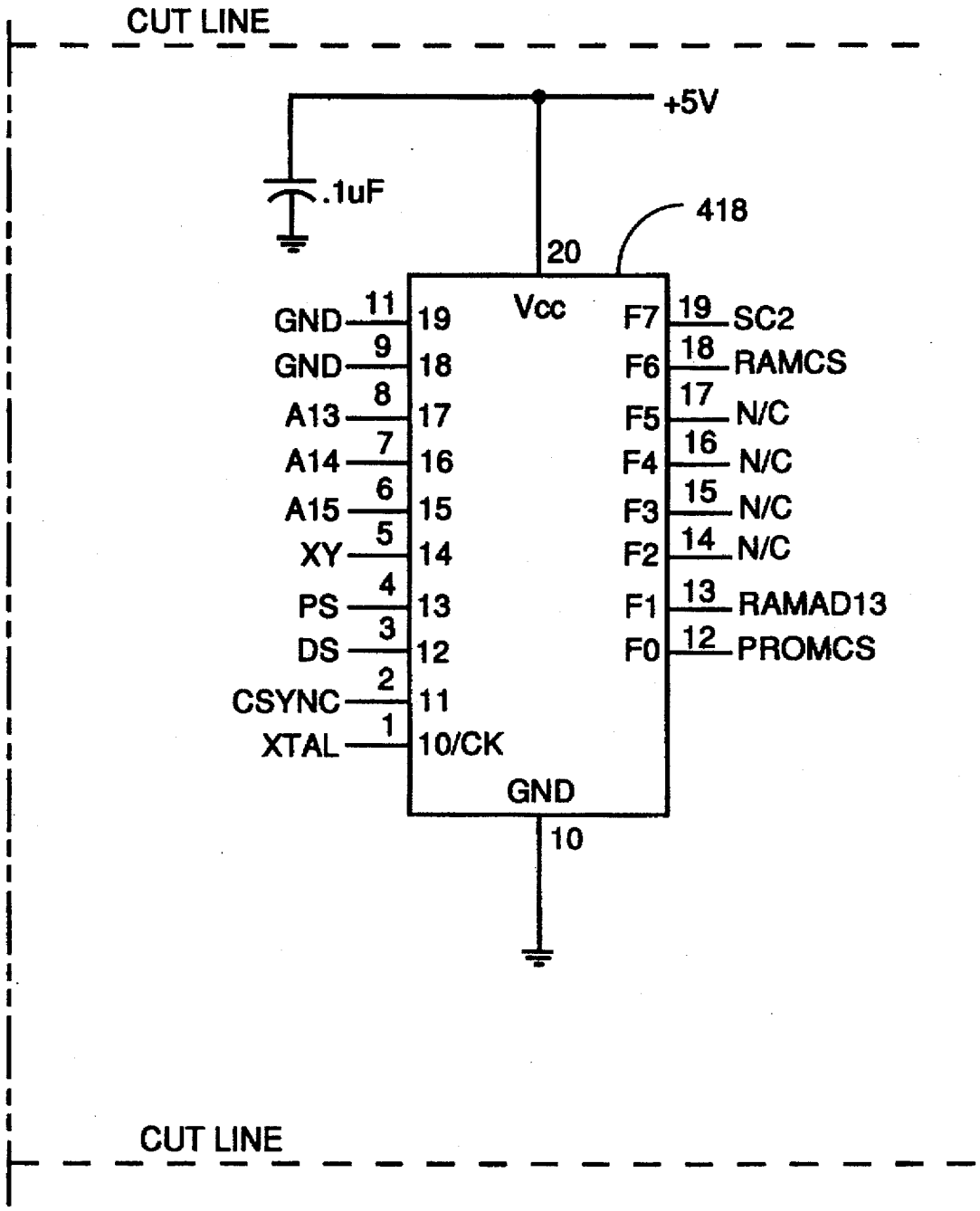
CUT LINE
+5V
.1uF
418
20
Vcc
GND 11 19
GND 9 18
A13 8 17
A14 7 16
A15 6 15
XY 5 14
PS 4 13
DS 3 12
CSYNC 2 11
XTAL 1 10/CK
F7 19 SC2
F6 18 RAMCS
F5 17 N/C
F4 16 N/C
F3 15 N/C
F2 14 N/C
F1 13 RAMAD13
F0 12 PROMCS
GND
10
CUT LINE

FIG. 20B1C

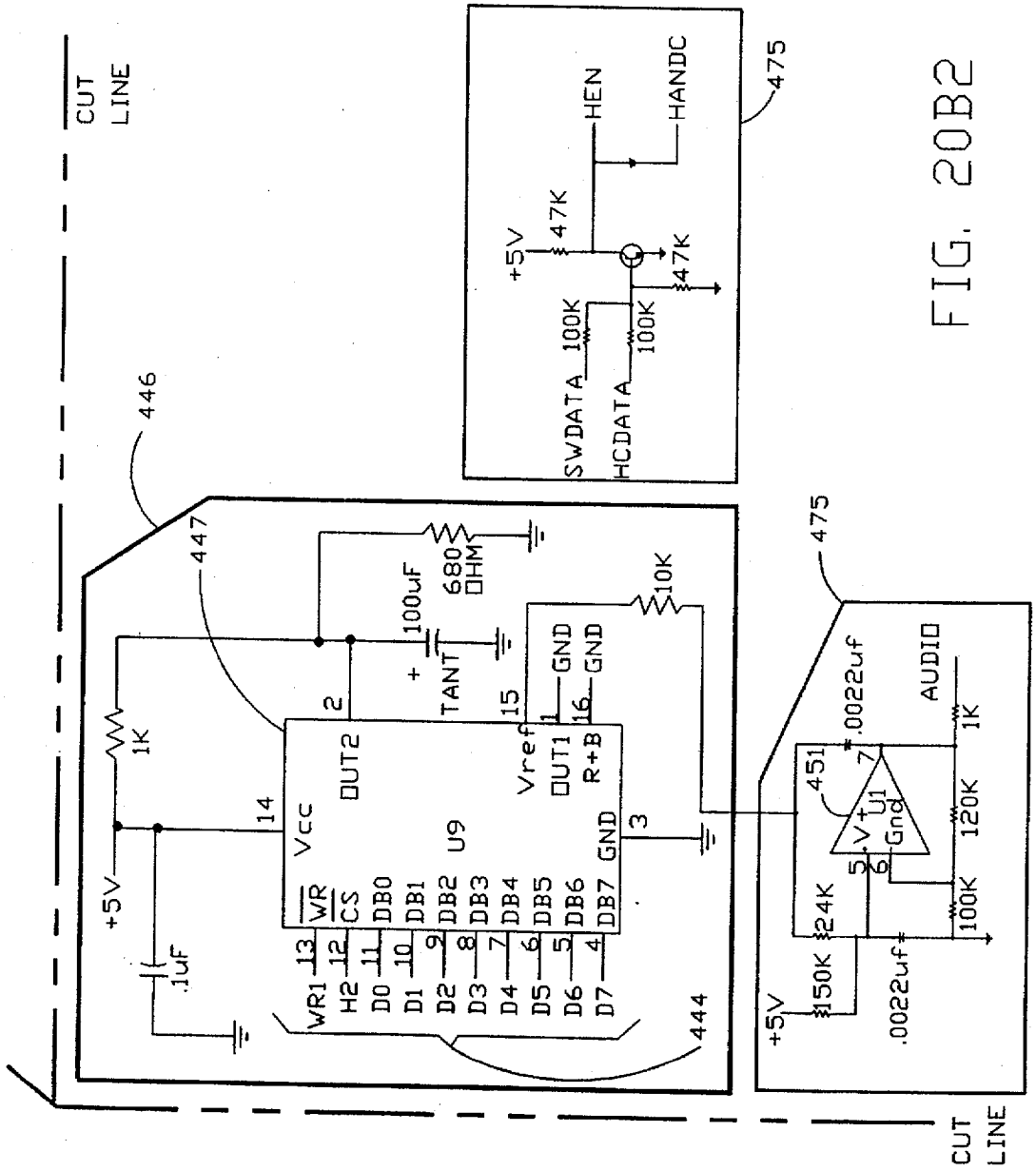
CUT LINE
446
447
475
HEN
HANDC
+5V
47K
47K
100K
100K
SWDATA
HCDATA
680 OHM
100uF
TANT
10K
GND
GND
1K
+5V
.1uF
Vcc
OUT2
Vref
OUT1
R+B
GND
U9
WR
CS
DB0
DB1
DB2
DB3
DB4
DB5
DB6
DB7
WR1
H2
D0
D1
D2
D3
D4
D5
D6
D7
444
.0022uf
AUDIO
1K
451
U1
Gnd
120K
24K
100K
150K
.0022uf
+5V
CUT LINE

FIG. 20B2

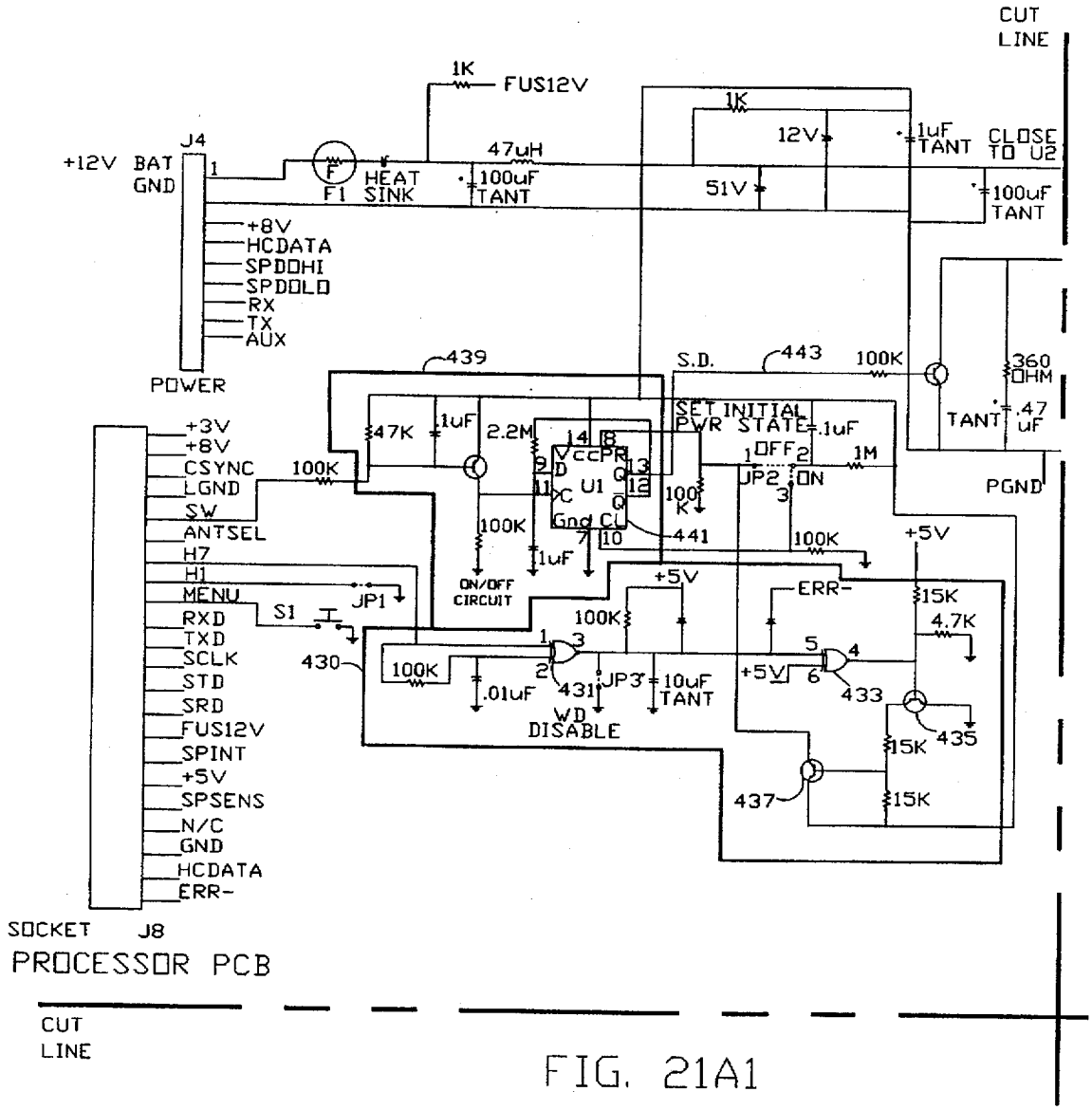
CUT LINE
1K
FUS12V
1K
12V
1uF TANT
CLOSE TO U2
J4
+12V BAT
GND
1
F1
HEAT SINK
47uH
100uF TANT
51V
100uF TANT
+8V
HCDATA
SPDOHI
SPDOLO
RX
TX
AUX
POWER
439
S.D.
443
100K
360 OHM
TANT
.47 uF
SET INITIAL PWR STATE
.1uF
OFF
JP2
ON
1M
PGND
+3V
+8V
CSYNC
LGND
SW
ANTSEL
H7
H1
MENU
RXD
TXD
SCLK
STD
SRD
FUS12V
SPINT
+5V
SPSENS
N/C
GND
HCDATA
ERR-
100K
47K
1uF
2.2M
U1
100K
1uF
441
100K
+5V
ON/OFF CIRCUIT
JP1
S1
+5V
ERR-
15K
4.7K
100K
430
100K
.01uF
431
JP3
10uF TANT
WD DISABLE
+5V
433
435
15K
437
15K
SOCKET J8
PROCESSOR PCB
CUT LINE

FIG. 21A1

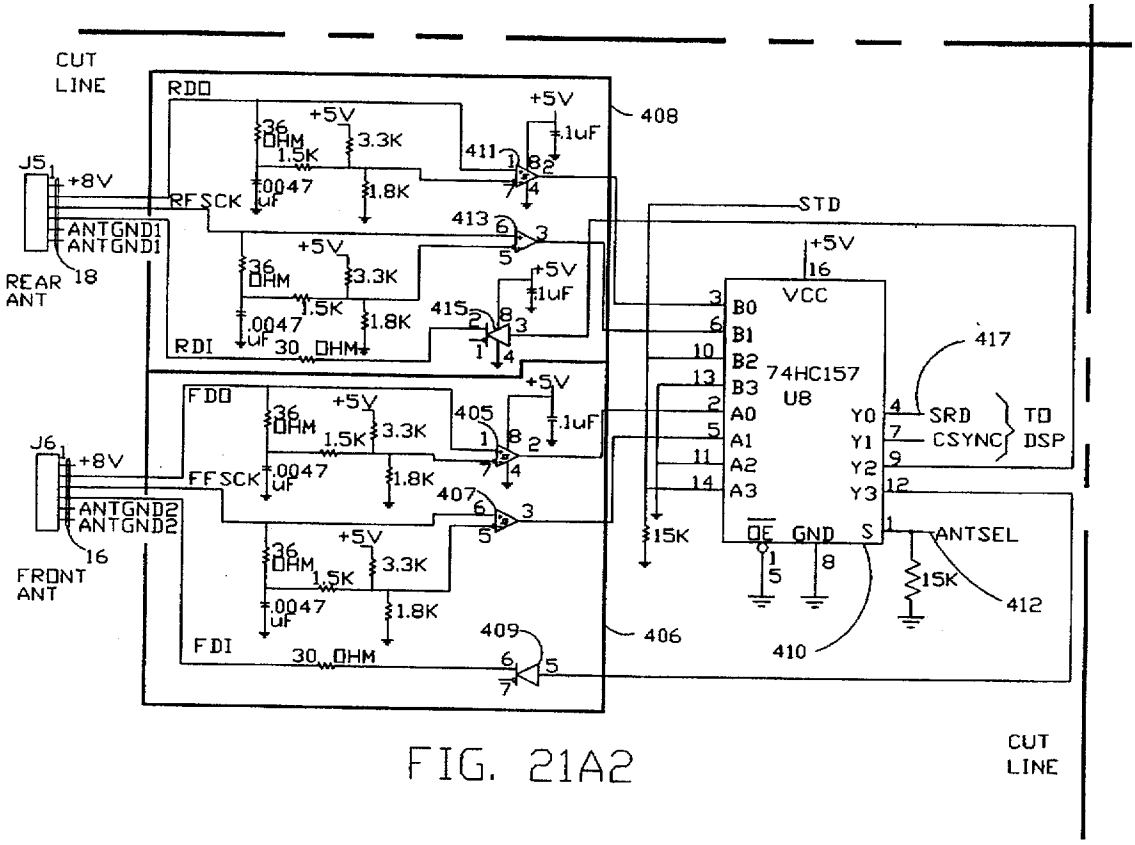
CUT LINE
RDO
+5V
36 OHM
1.5K
3.3K
.1uF
408
411
J5
+8V
RFSCK
.0047 uF
1.8K
ANTGND1
ANTGND1
REAR ANT
18
413
STD
+5V
16
VCC
B0
B1
B2
B3
A0
A1
A2
A3
74HC157
U8
Y0
Y1
Y2
Y3
SRD
CSYNC
TD
DSP
417
RDI
30 OHM
415
FDO
405
FFSCK
407
J6
ANTGND2
ANTGND2
FRONT ANT
16
15K
OE
GND
S
ANTSEL
412
410
FDI
409
406
CUT LINE

FIG. 21A2

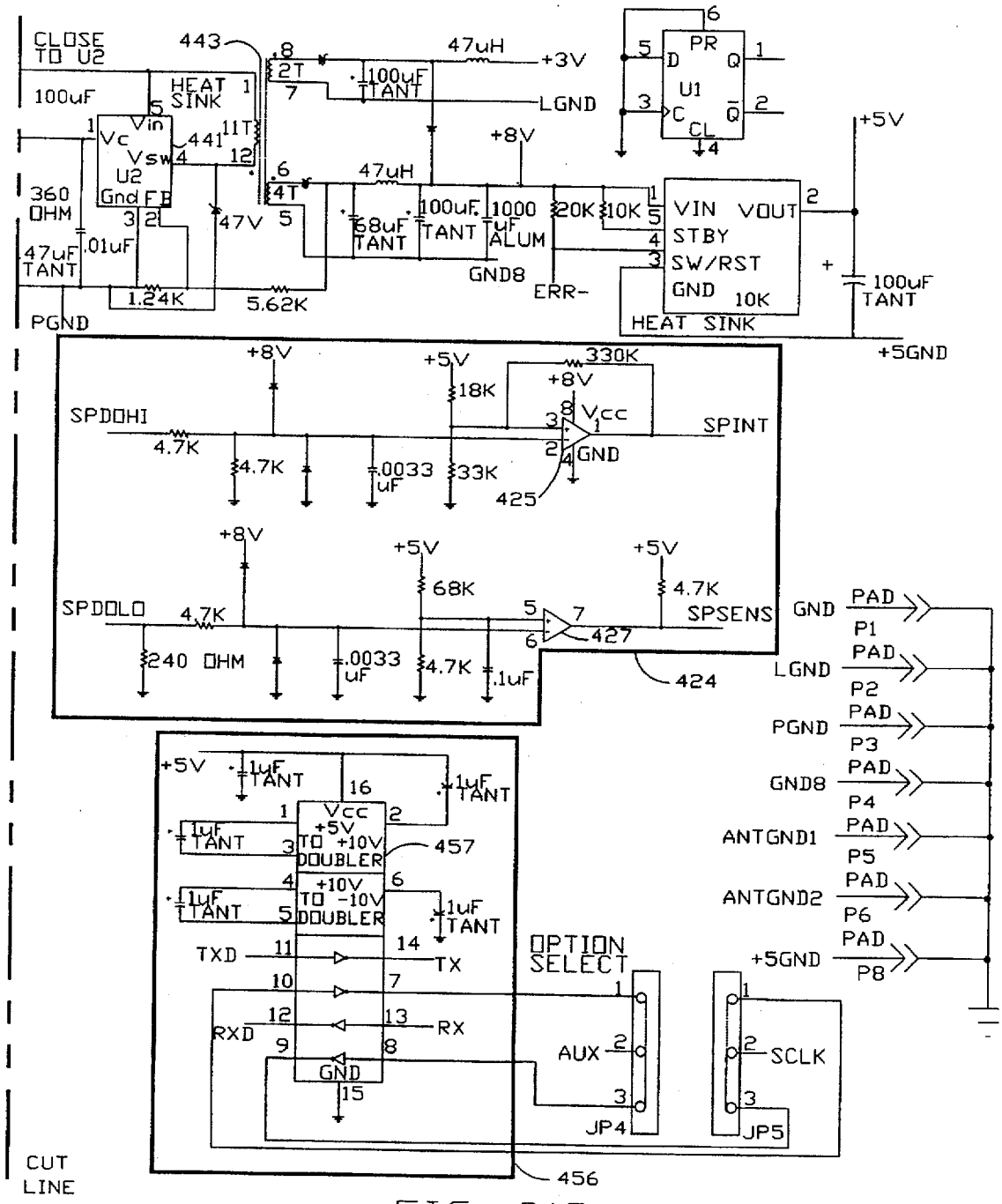
CLOSE TO U2
443
100uF
HEAT SINK
Vin
Vc
Vsw
U2
Gnd FB
441
360 OHM
47uF TANT
.01uF
1.24K
5.62K
47V
PGND
2T
4T
11T
100uF TANT
47uH
+3V
LGND
+8V
68uF TANT
1000 uF ALUM
GND8
20K
10K
ERR-
PR
D
Q
U1
C
CL
VIN VOUT
STBY
SW/RST
GND
10K
HEAT SINK
+5V
100uF TANT
+5GND
330K
18K
SPDOHI
4.7K
.0033 uF
33K
Vcc
GND
SPINT
425
68K
SPDOLO
240 OHM
.1uF
SPSENS
427
424
GND PAD P1
LGND PAD P2
PGND PAD P3
GND8 PAD P4
ANTGND1 PAD P5
ANTGND2 PAD P6
+5GND PAD P8
1uF TANT
Vcc +5V TO +10V DOUBLER
+10V TO -10V DOUBLER
457
TXD
TX
RXD
RX
GND
OPTION SELECT
AUX
JP4
SCLK
JP5
456
CUT LINE

FIG. 21B

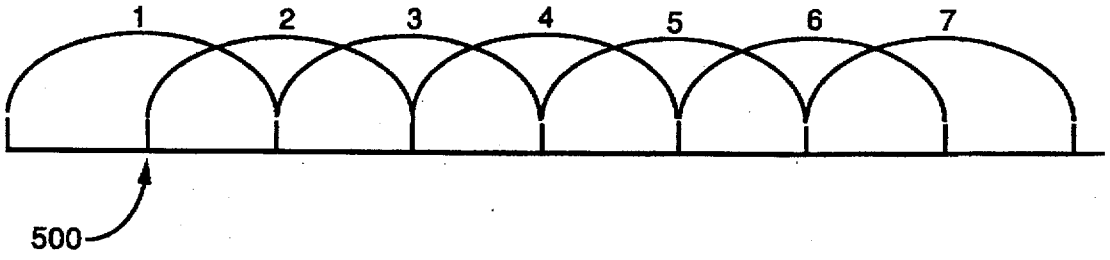

FIG. 22

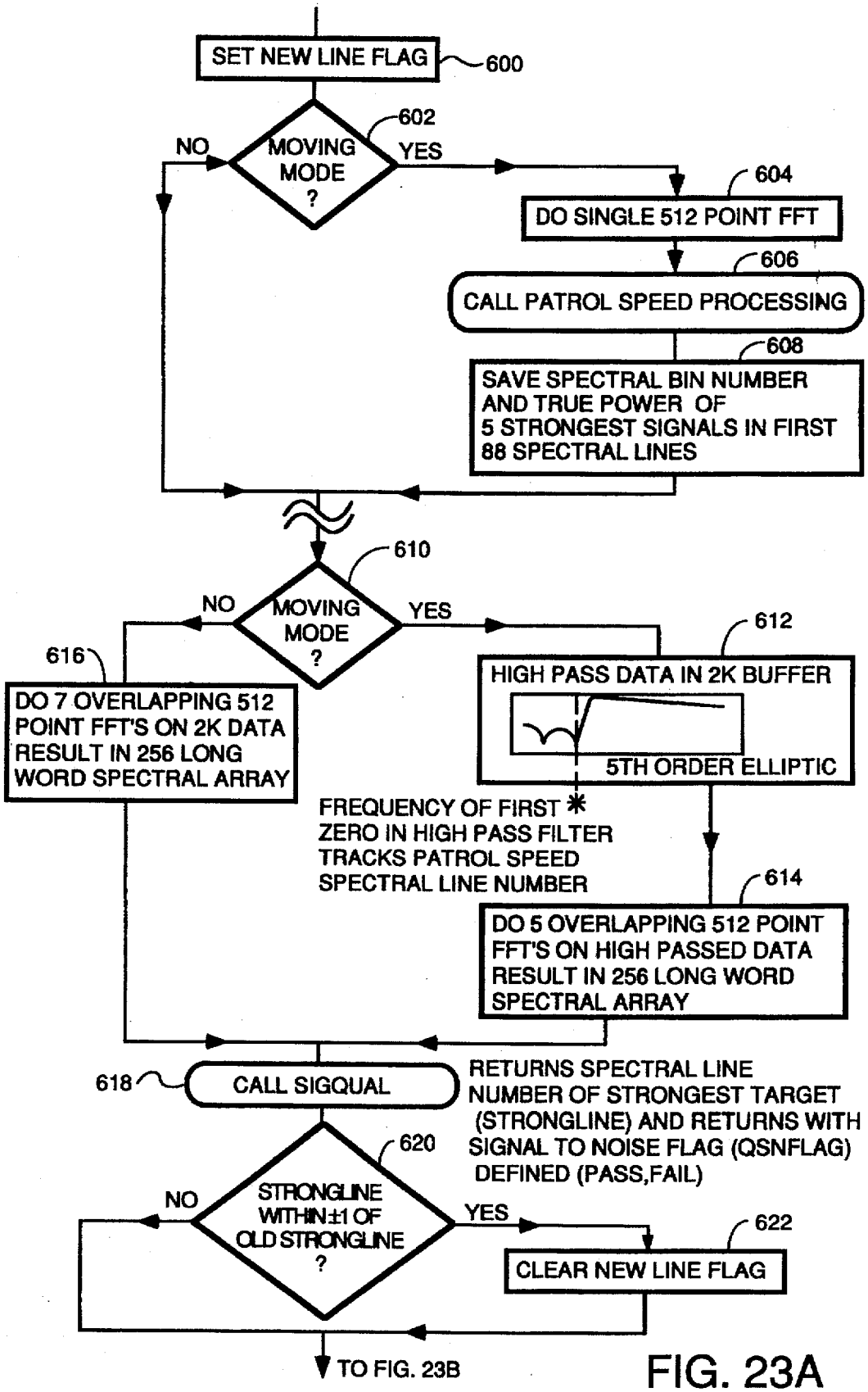
SET NEW LINE FLAG
600
602
MOVING MODE ?
NO
YES
604
DO SINGLE 512 POINT FFT
606
CALL PATROL SPEED PROCESSING
608
SAVE SPECTRAL BIN NUMBER AND TRUE POWER OF 5 STRONGEST SIGNALS IN FIRST 88 SPECTRAL LINES
610
MOVING MODE ?
NO
YES
616
DO 7 OVERLAPPING 512 POINT FFT'S ON 2K DATA RESULT IN 256 LONG WORD SPECTRAL ARRAY
612
HIGH PASS DATA IN 2K BUFFER
5TH ORDER ELLIPTIC
FREQUENCY OF FIRST * ZERO IN HIGH PASS FILTER TRACKS PATROL SPEED SPECTRAL LINE NUMBER
614
DO 5 OVERLAPPING 512 POINT FFT'S ON HIGH PASSED DATA RESULT IN 256 LONG WORD SPECTRAL ARRAY
618
CALL SIGQUAL
RETURNS SPECTRAL LINE NUMBER OF STRONGEST TARGET (STRONGLINE) AND RETURNS WITH SIGNAL TO NOISE FLAG (QSNFLAG) DEFINED (PASS,FAIL)
620
STRONGLINE WITHIN ±1 OF OLD STRONGLINE ?
NO
YES
622
CLEAR NEW LINE FLAG
TO FIG. 23B

FIG. 23A

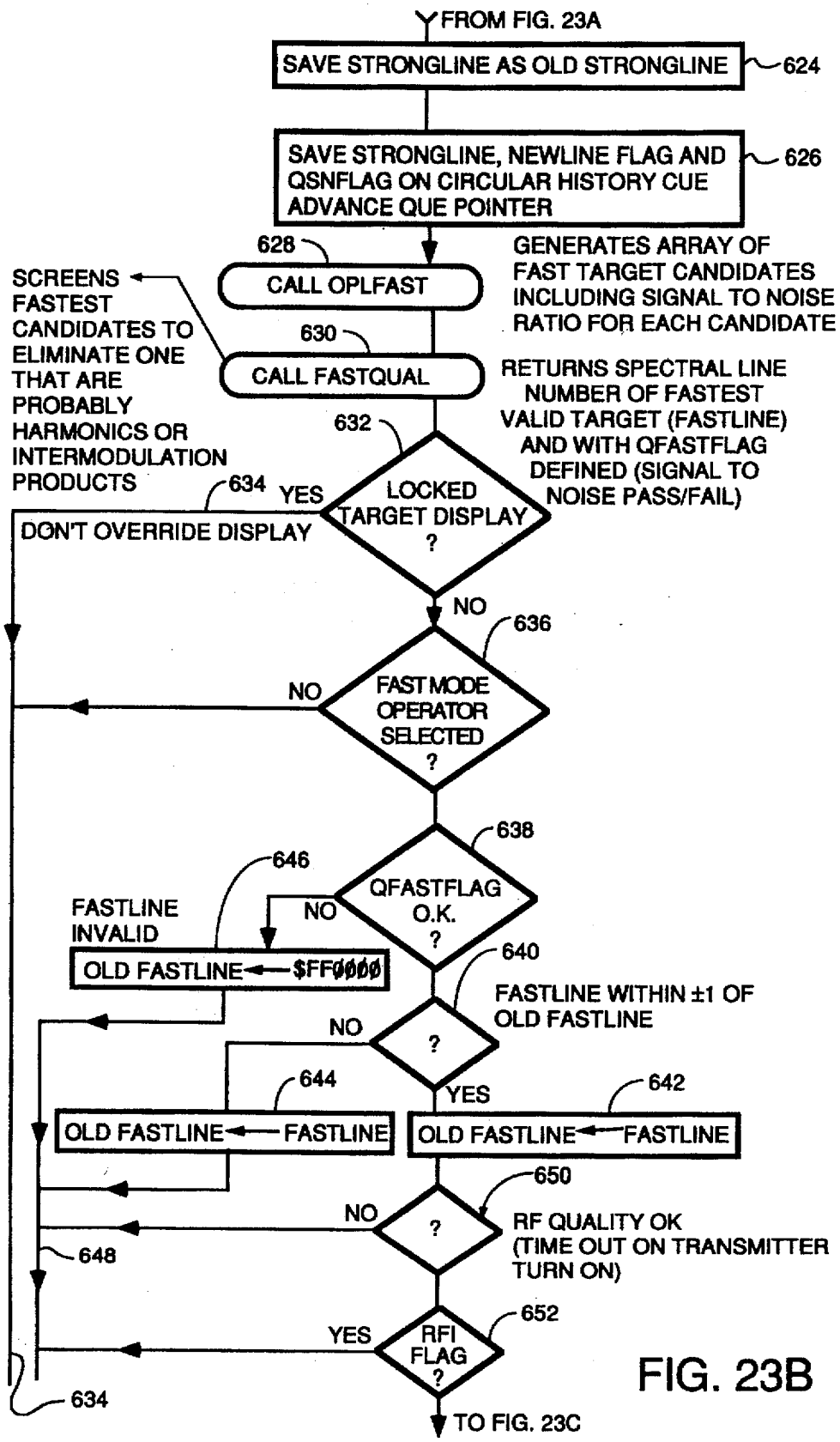
FROM FIG. 23A
SAVE STRONGLINE AS OLD STRONGLINE
624
SAVE STRONGLINE, NEWLINE FLAG AND QSNFLAG ON CIRCULAR HISTORY CUE ADVANCE QUE POINTER
626
628
CALL OPLFAST
GENERATES ARRAY OF FAST TARGET CANDIDATES INCLUDING SIGNAL TO NOISE RATIO FOR EACH CANDIDATE
SCREENS FASTEST CANDIDATES TO ELIMINATE ONE THAT ARE PROBABLY HARMONICS OR INTERMODULATION PRODUCTS
630
CALL FASTQUAL
RETURNS SPECTRAL LINE NUMBER OF FASTEST VALID TARGET (FASTLINE) AND WITH QFASTFLAG DEFINED (SIGNAL TO NOISE PASS/FAIL)
632
LOCKED TARGET DISPLAY ?
YES
634
DON'T OVERRIDE DISPLAY
NO
636
FAST MODE OPERATOR SELECTED ?
NO
638
QFASTFLAG O.K. ?
NO
646
FASTLINE INVALID
OLD FASTLINE ← $FF0000
640
FASTLINE WITHIN ±1 OF OLD FASTLINE
?
NO
YES
644
OLD FASTLINE ← FASTLINE
642
OLD FASTLINE ← FASTLINE
650
?
NO
RF QUALITY OK (TIME OUT ON TRANSMITTER TURN ON)
648
652
RFI FLAG ?
YES
634
TO FIG. 23C

FIG. 23B

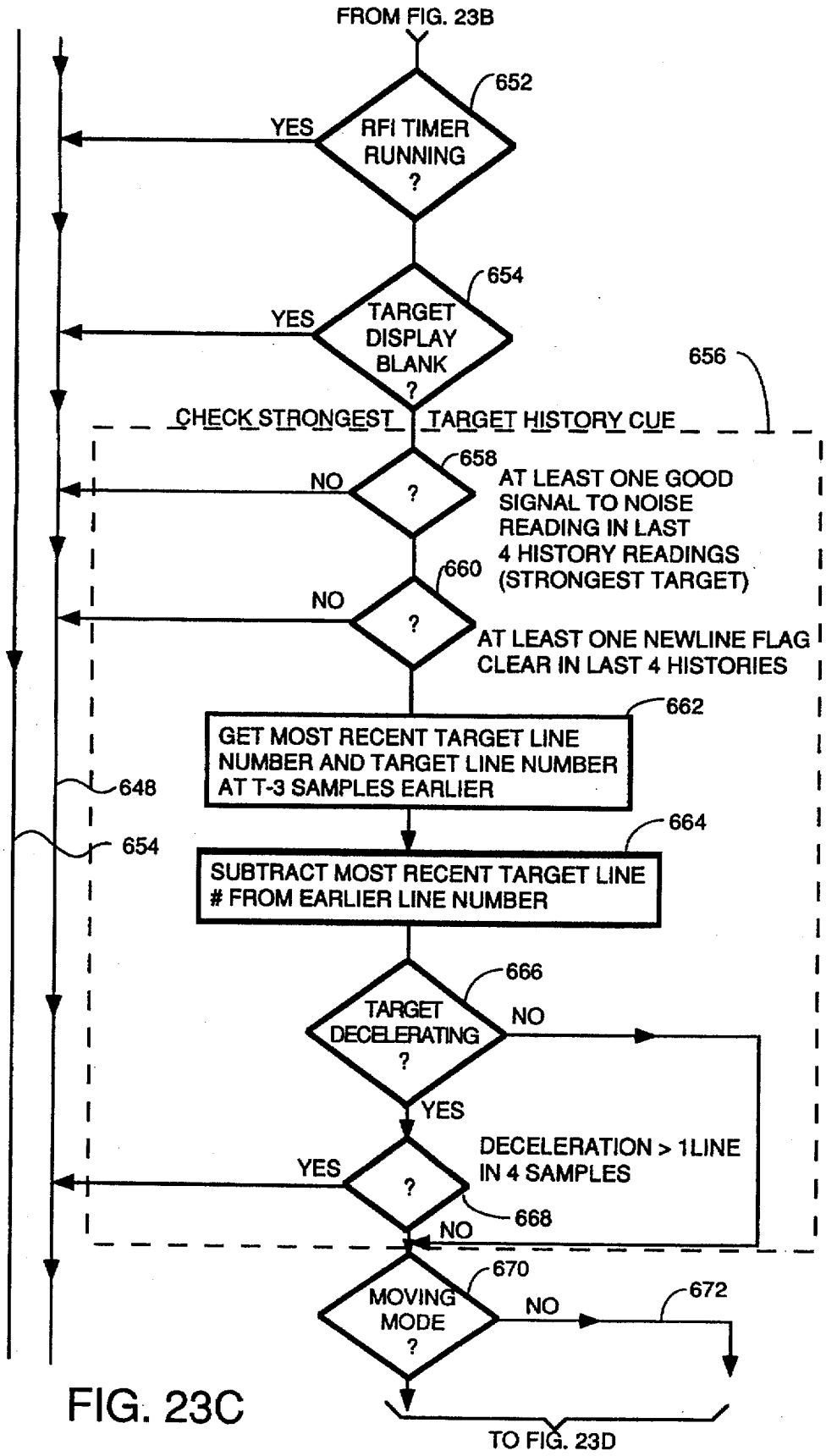
FROM FIG. 23B
652
RFI TIMER RUNNING ?
YES
654
TARGET DISPLAY BLANK ?
YES
656
CHECK STRONGEST TARGET HISTORY CUE
658
?
NO
AT LEAST ONE GOOD SIGNAL TO NOISE READING IN LAST 4 HISTORY READINGS (STRONGEST TARGET)
660
?
NO
AT LEAST ONE NEWLINE FLAG CLEAR IN LAST 4 HISTORIES
662
GET MOST RECENT TARGET LINE NUMBER AND TARGET LINE NUMBER AT T-3 SAMPLES EARLIER
648
654
664
SUBTRACT MOST RECENT TARGET LINE # FROM EARLIER LINE NUMBER
666
TARGET DECELERATING ?
NO
YES
DECELERATION > 1LINE IN 4 SAMPLES
YES
?
668
NO
670
MOVING MODE ?
NO
672
TO FIG. 23D

FIG. 23C

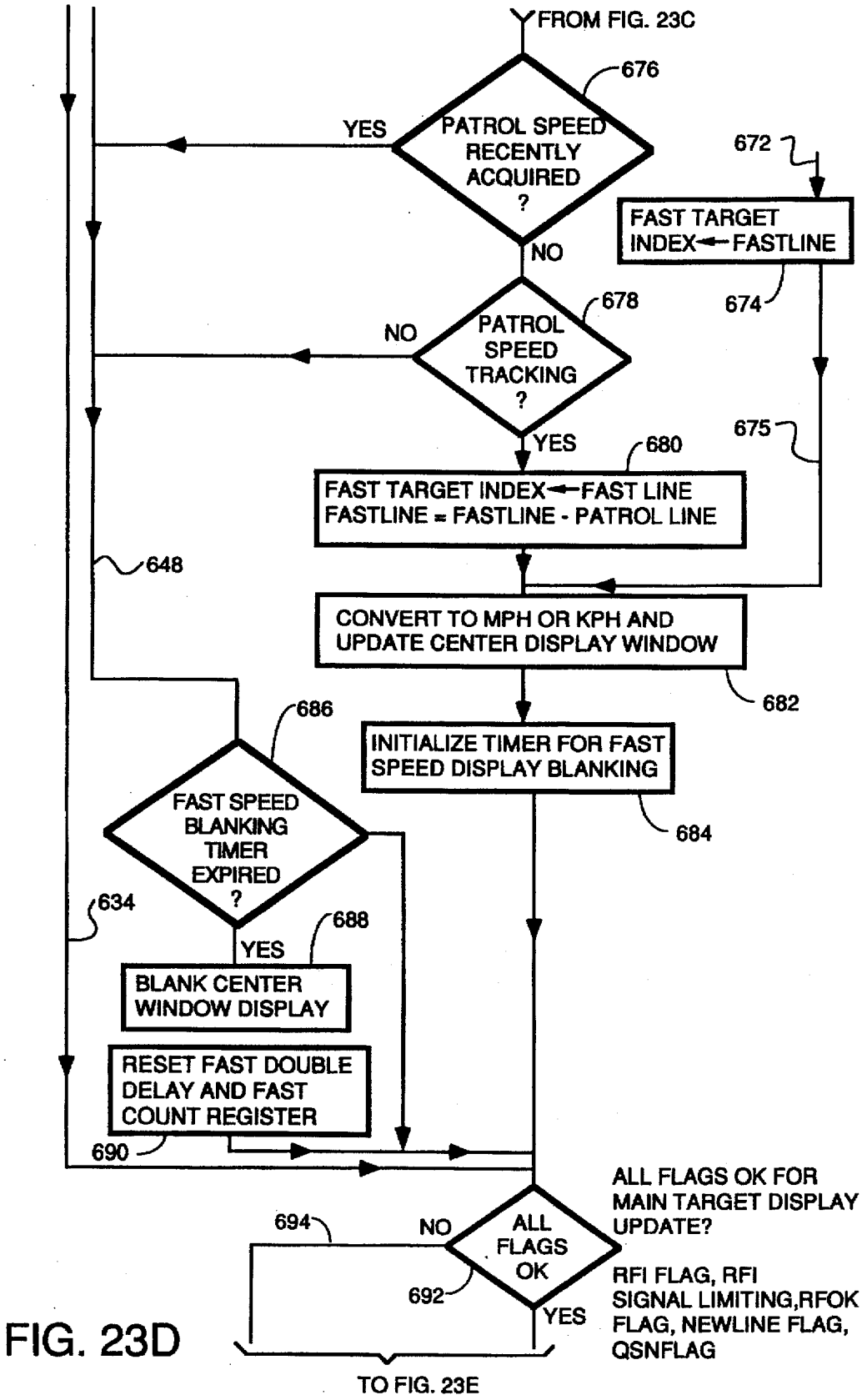
FROM FIG. 23C
676
PATROL SPEED RECENTLY ACQUIRED ?
YES
NO
672
FAST TARGET INDEX ← FASTLINE
674
678
PATROL SPEED TRACKING ?
NO
YES
675
680
FAST TARGET INDEX ← FAST LINE
FASTLINE = FASTLINE - PATROL LINE
648
CONVERT TO MPH OR KPH AND UPDATE CENTER DISPLAY WINDOW
682
686
INITIALIZE TIMER FOR FAST SPEED DISPLAY BLANKING
684
FAST SPEED BLANKING TIMER EXPIRED ?
634
688
YES
BLANK CENTER WINDOW DISPLAY
RESET FAST DOUBLE DELAY AND FAST COUNT REGISTER
690
ALL FLAGS OK FOR MAIN TARGET DISPLAY UPDATE?
694
NO
ALL FLAGS OK
692
YES
RFI FLAG, RFI SIGNAL LIMITING,RFOK FLAG, NEWLINE FLAG, QSNFLAG
TO FIG. 23E

FIG. 23D

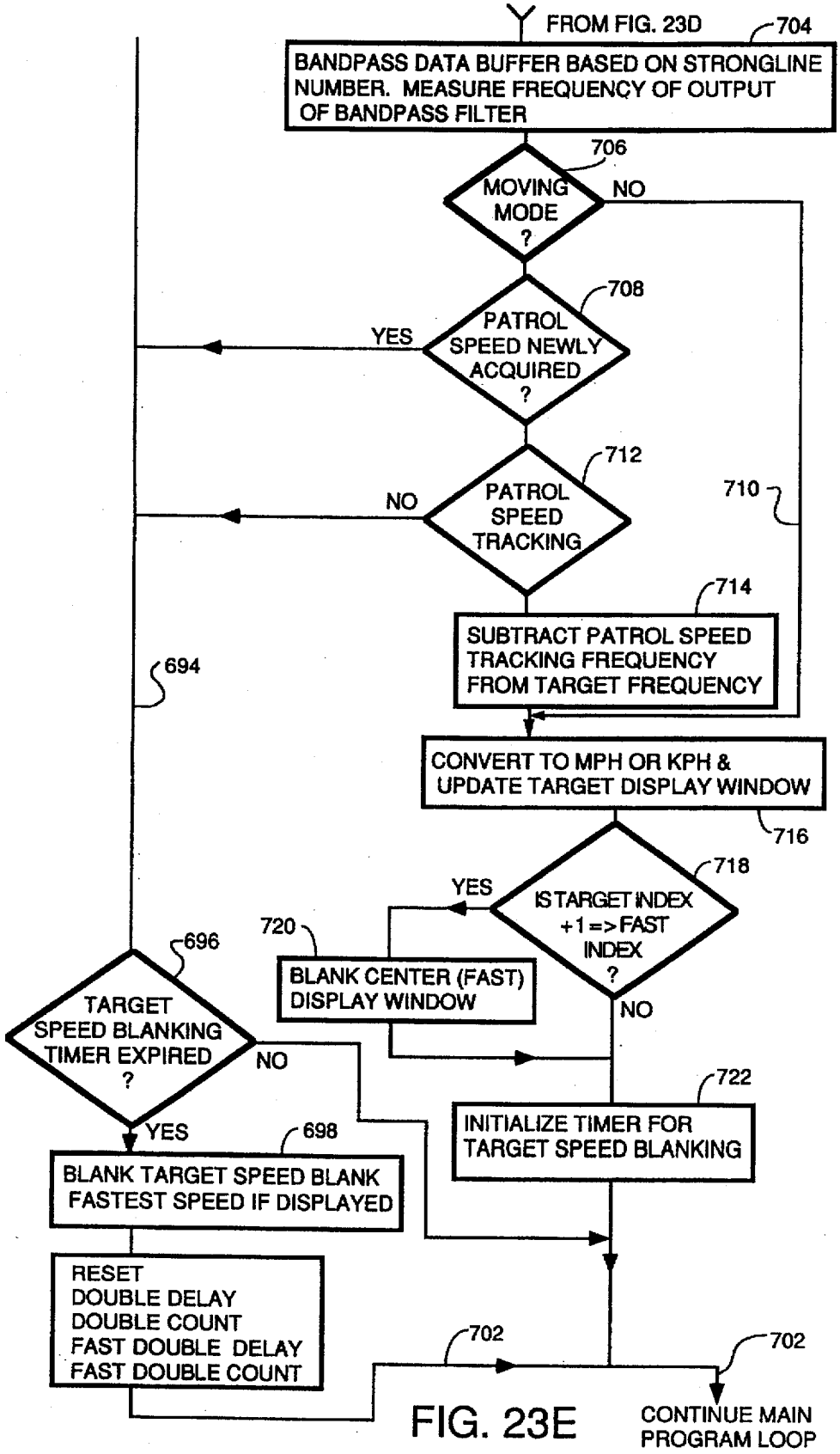
FROM FIG. 23D
704
BANDPASS DATA BUFFER BASED ON STRONGLINE NUMBER. MEASURE FREQUENCY OF OUTPUT OF BANDPASS FILTER
706
MOVING MODE ?
NO
708
PATROL SPEED NEWLY ACQUIRED ?
YES
712
PATROL SPEED TRACKING
NO
710
714
SUBTRACT PATROL SPEED TRACKING FREQUENCY FROM TARGET FREQUENCY
694
CONVERT TO MPH OR KPH & UPDATE TARGET DISPLAY WINDOW
716
718
IS TARGET INDEX +1 => FAST INDEX ?
YES
720
BLANK CENTER (FAST) DISPLAY WINDOW
NO
696
TARGET SPEED BLANKING TIMER EXPIRED ?
NO
YES
722
INITIALIZE TIMER FOR TARGET SPEED BLANKING
698
BLANK TARGET SPEED BLANK FASTEST SPEED IF DISPLAYED
RESET
DOUBLE DELAY
DOUBLE COUNT
FAST DOUBLE DELAY
FAST DOUBLE COUNT
702
702
CONTINUE MAIN PROGRAM LOOP

FIG. 23E

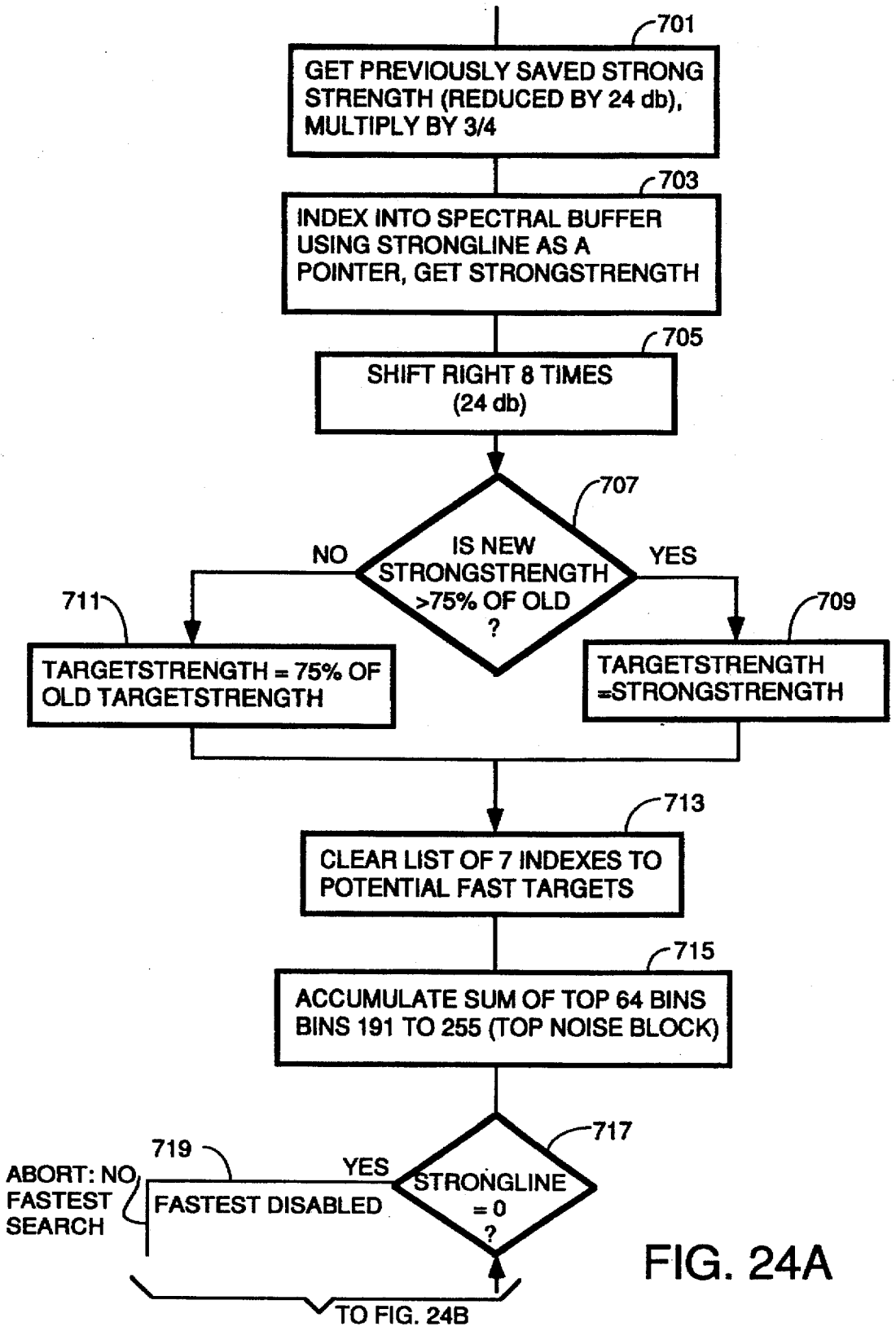
701
GET PREVIOUSLY SAVED STRONG STRENGTH (REDUCED BY 24 db), MULTIPLY BY 3/4
703
INDEX INTO SPECTRAL BUFFER USING STRONGLINE AS A POINTER, GET STRONGSTRENGTH
705
SHIFT RIGHT 8 TIMES (24 db)
707
IS NEW STRONGSTRENGTH >75% OF OLD ?
NO
YES
711
TARGETSTRENGTH = 75% OF OLD TARGETSTRENGTH
709
TARGETSTRENGTH =STRONGSTRENGTH
713
CLEAR LIST OF 7 INDEXES TO POTENTIAL FAST TARGETS
715
ACCUMULATE SUM OF TOP 64 BINS BINS 191 TO 255 (TOP NOISE BLOCK)
717
STRONGLINE = 0 ?
YES
719
FASTEST DISABLED
ABORT: NO FASTEST SEARCH
TO FIG. 24B

FIG. 24A

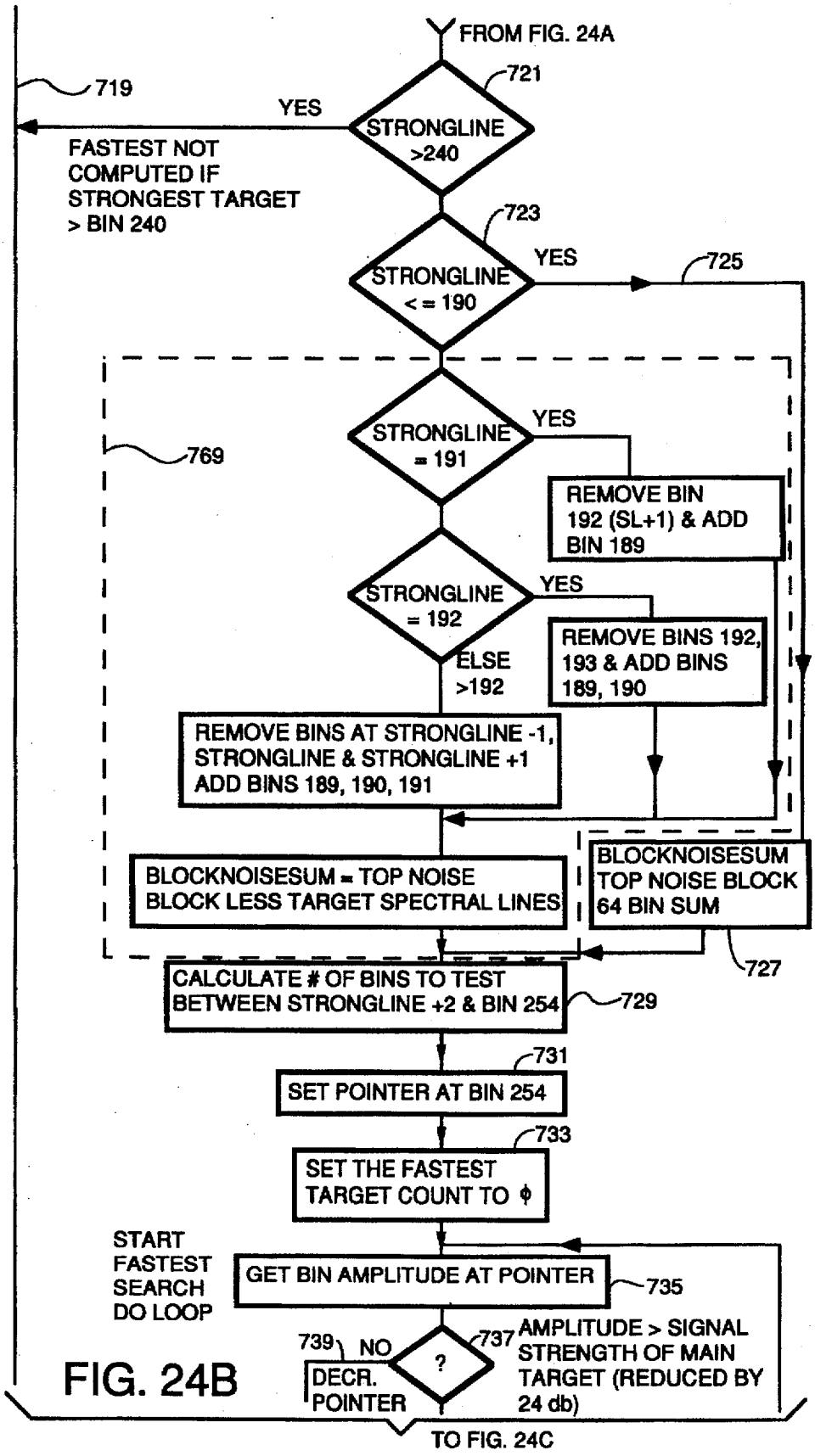
FROM FIG. 24A
721
STRONGLINE >240
YES
719
FASTEST NOT COMPUTED IF STRONGEST TARGET > BIN 240
723
STRONGLINE <= 190
YES
725
769
STRONGLINE = 191
YES
REMOVE BIN 192 (SL+1) & ADD BIN 189
STRONGLINE = 192
YES
REMOVE BINS 192, 193 & ADD BINS 189, 190
ELSE >192
REMOVE BINS AT STRONGLINE -1, STRONGLINE & STRONGLINE +1 ADD BINS 189, 190, 191
BLOCKNOISESUM = TOP NOISE BLOCK LESS TARGET SPECTRAL LINES
BLOCKNOISESUM TOP NOISE BLOCK 64 BIN SUM
727
CALCULATE # OF BINS TO TEST BETWEEN STRONGLINE +2 & BIN 254
729
731
SET POINTER AT BIN 254
733
SET THE FASTEST TARGET COUNT TO ϕ
START FASTEST SEARCH DO LOOP
GET BIN AMPLITUDE AT POINTER
735
739
NO
DECR. POINTER
?
737
AMPLITUDE > SIGNAL STRENGTH OF MAIN TARGET (REDUCED BY 24 db)
TO FIG. 24C

FIG. 24B

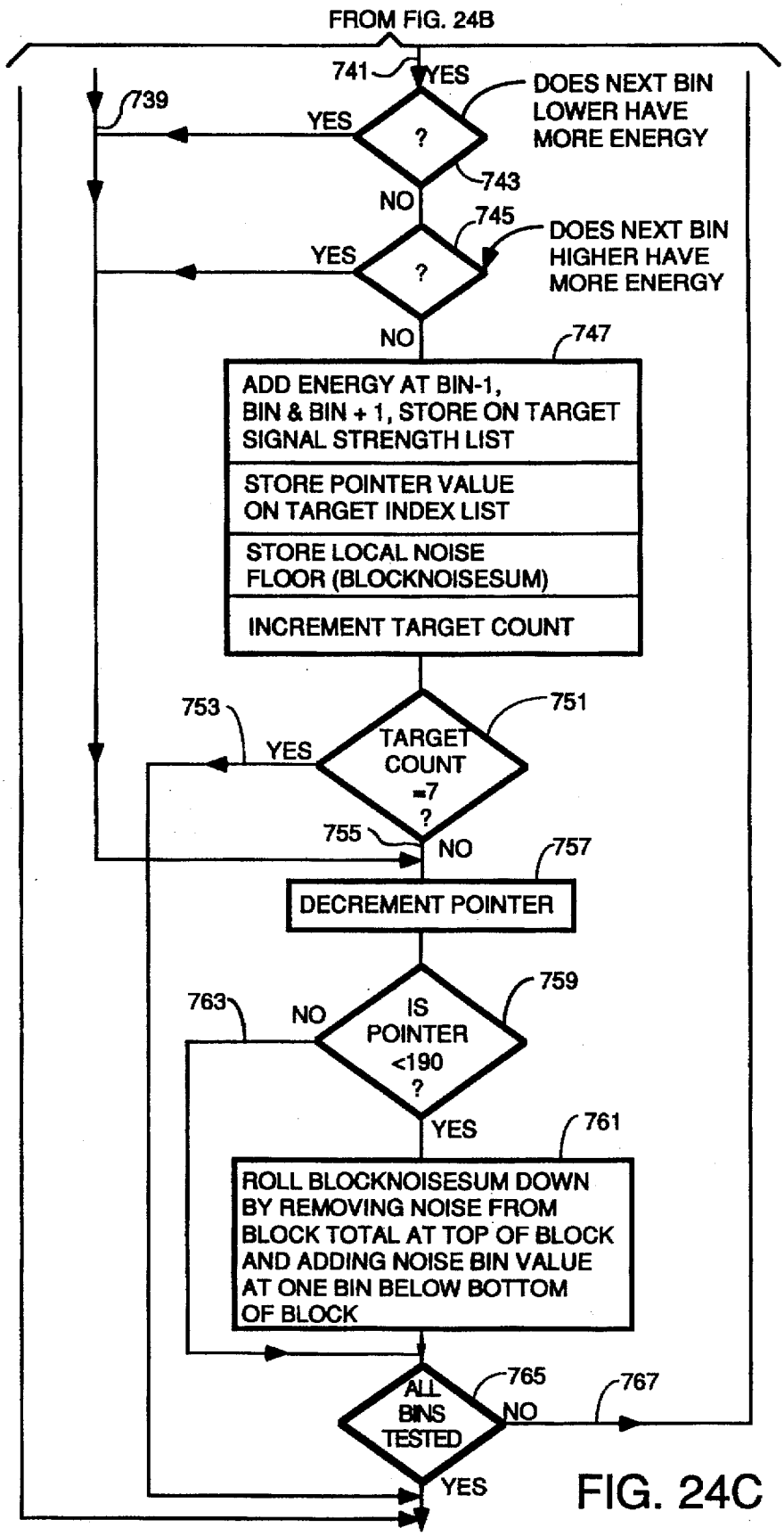
FROM FIG. 24B
741
YES
DOES NEXT BIN LOWER HAVE MORE ENERGY
739
YES
?
743
NO
745
DOES NEXT BIN HIGHER HAVE MORE ENERGY
YES
?
NO
747
ADD ENERGY AT BIN-1, BIN & BIN + 1, STORE ON TARGET SIGNAL STRENGTH LIST
STORE POINTER VALUE ON TARGET INDEX LIST
STORE LOCAL NOISE FLOOR (BLOCKNOISESUM)
INCREMENT TARGET COUNT
753
751
YES
TARGET COUNT =7 ?
755
NO
757
DECREMENT POINTER
759
763
NO
IS POINTER <190 ?
YES
761
ROLL BLOCKNOISESUM DOWN BY REMOVING NOISE FROM BLOCK TOTAL AT TOP OF BLOCK AND ADDING NOISE BIN VALUE AT ONE BIN BELOW BOTTOM OF BLOCK
765
767
ALL BINS TESTED
NO
YES

FIG. 24C

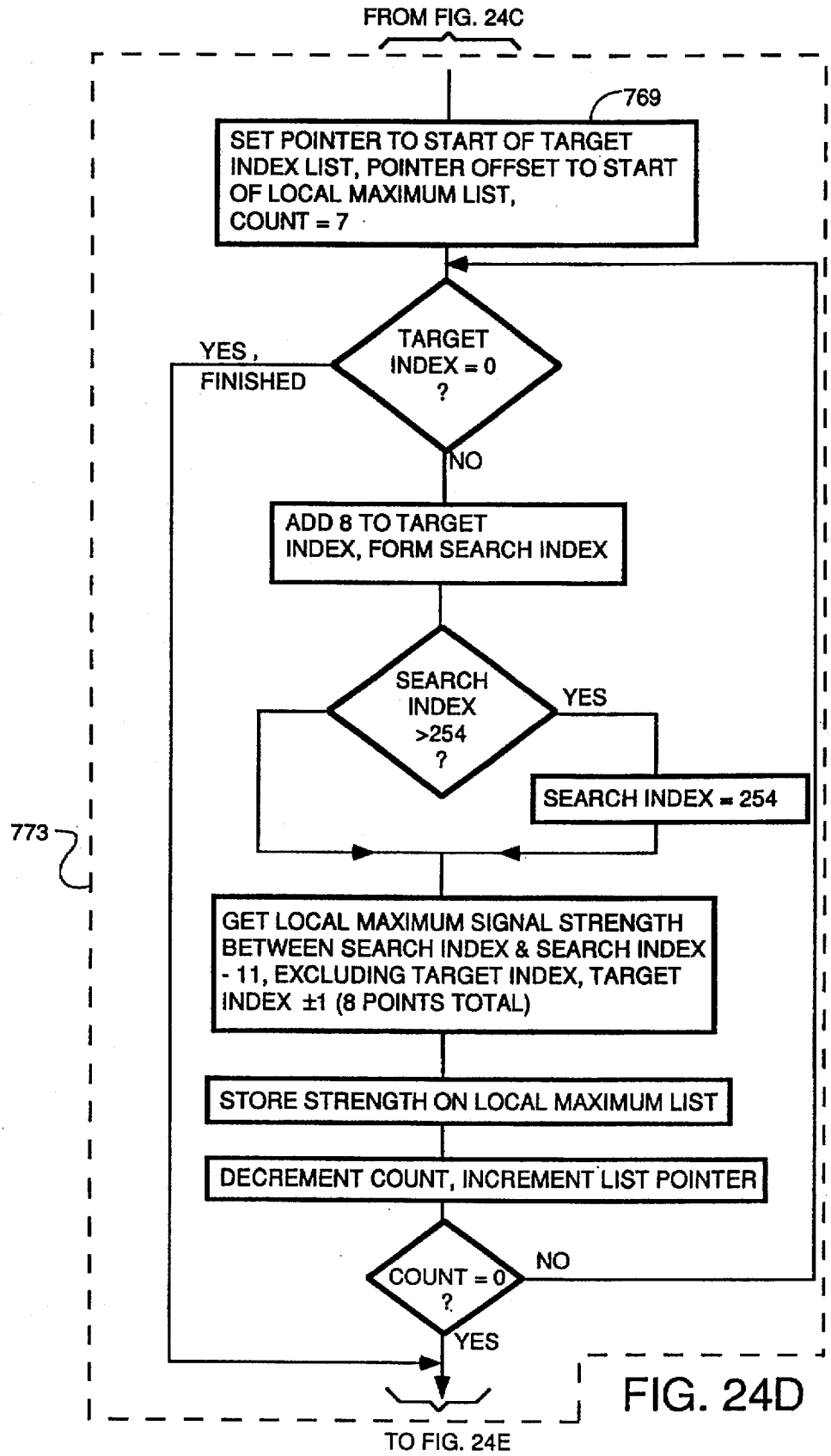
FROM FIG. 24C
769
SET POINTER TO START OF TARGET INDEX LIST, POINTER OFFSET TO START OF LOCAL MAXIMUM LIST, COUNT = 7
TARGET INDEX = 0 ?
YES, FINISHED
NO
ADD 8 TO TARGET INDEX, FORM SEARCH INDEX
SEARCH INDEX >254 ?
YES
SEARCH INDEX = 254
773
GET LOCAL MAXIMUM SIGNAL STRENGTH BETWEEN SEARCH INDEX & SEARCH INDEX - 11, EXCLUDING TARGET INDEX, TARGET INDEX ±1 (8 POINTS TOTAL)
STORE STRENGTH ON LOCAL MAXIMUM LIST
DECREMENT COUNT, INCREMENT LIST POINTER
COUNT = 0 ?
NO
YES
TO FIG. 24E

FIG. 24D

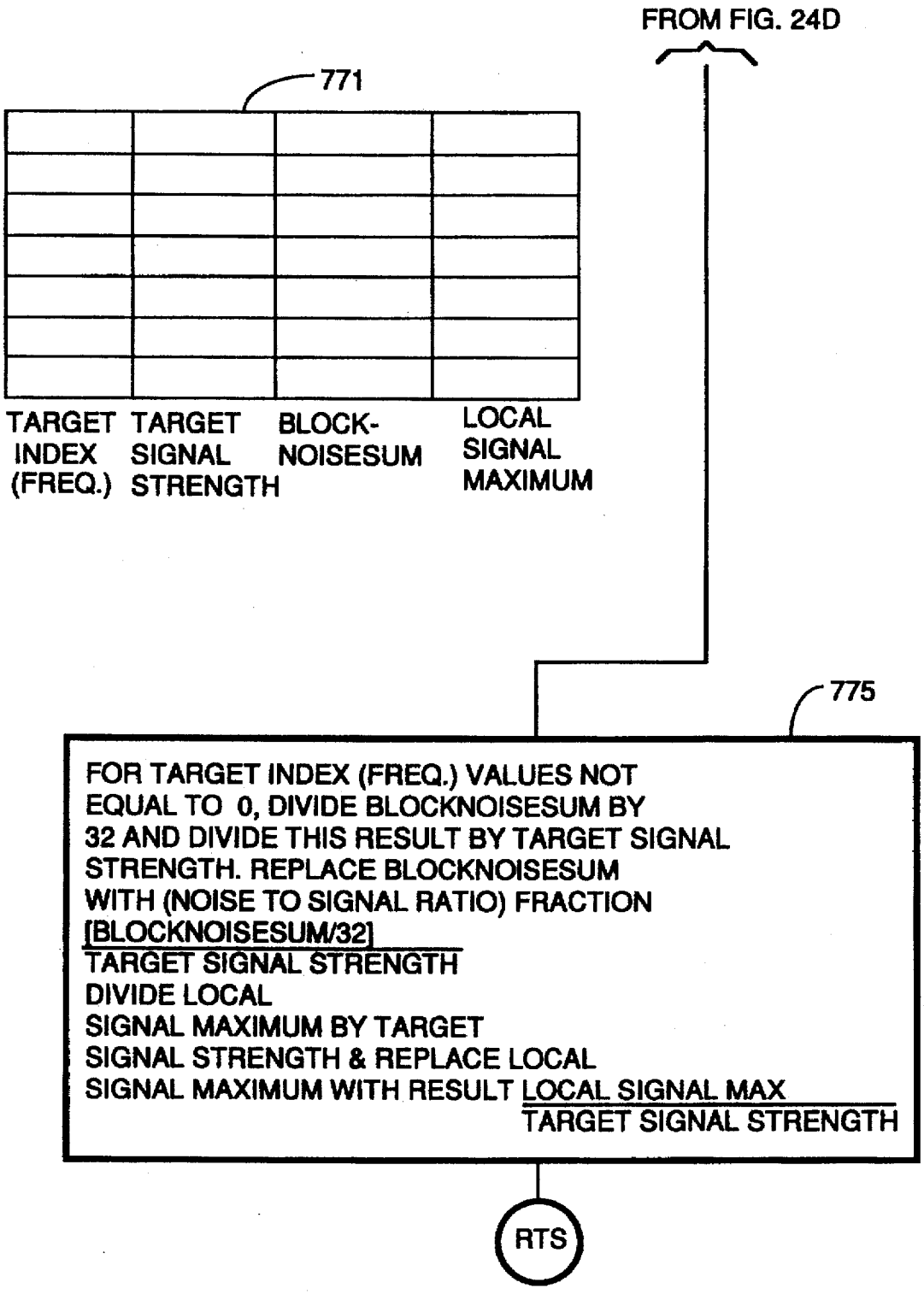
FROM FIG. 24D
771
TARGET INDEX (FREQ.)
TARGET SIGNAL STRENGTH
BLOCK-NOISESUM
LOCAL SIGNAL MAXIMUM
775
FOR TARGET INDEX (FREQ.) VALUES NOT EQUAL TO 0, DIVIDE BLOCKNOISESUM BY 32 AND DIVIDE THIS RESULT BY TARGET SIGNAL STRENGTH. REPLACE BLOCKNOISESUM WITH (NOISE TO SIGNAL RATIO) FRACTION [BLOCKNOISESUM/32] / TARGET SIGNAL STRENGTH
DIVIDE LOCAL SIGNAL MAXIMUM BY TARGET SIGNAL STRENGTH & REPLACE LOCAL SIGNAL MAXIMUM WITH RESULT LOCAL SIGNAL MAX / TARGET SIGNAL STRENGTH
RTS

FIG. 24E

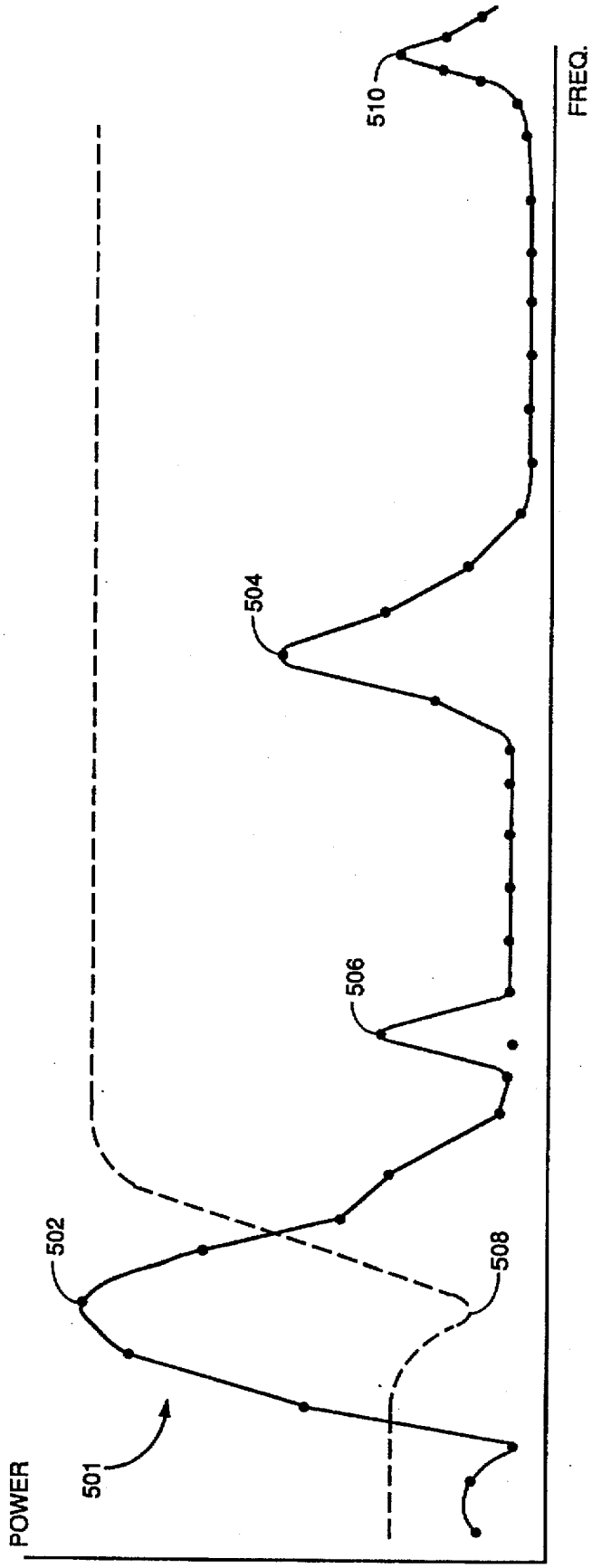

FIG. 25

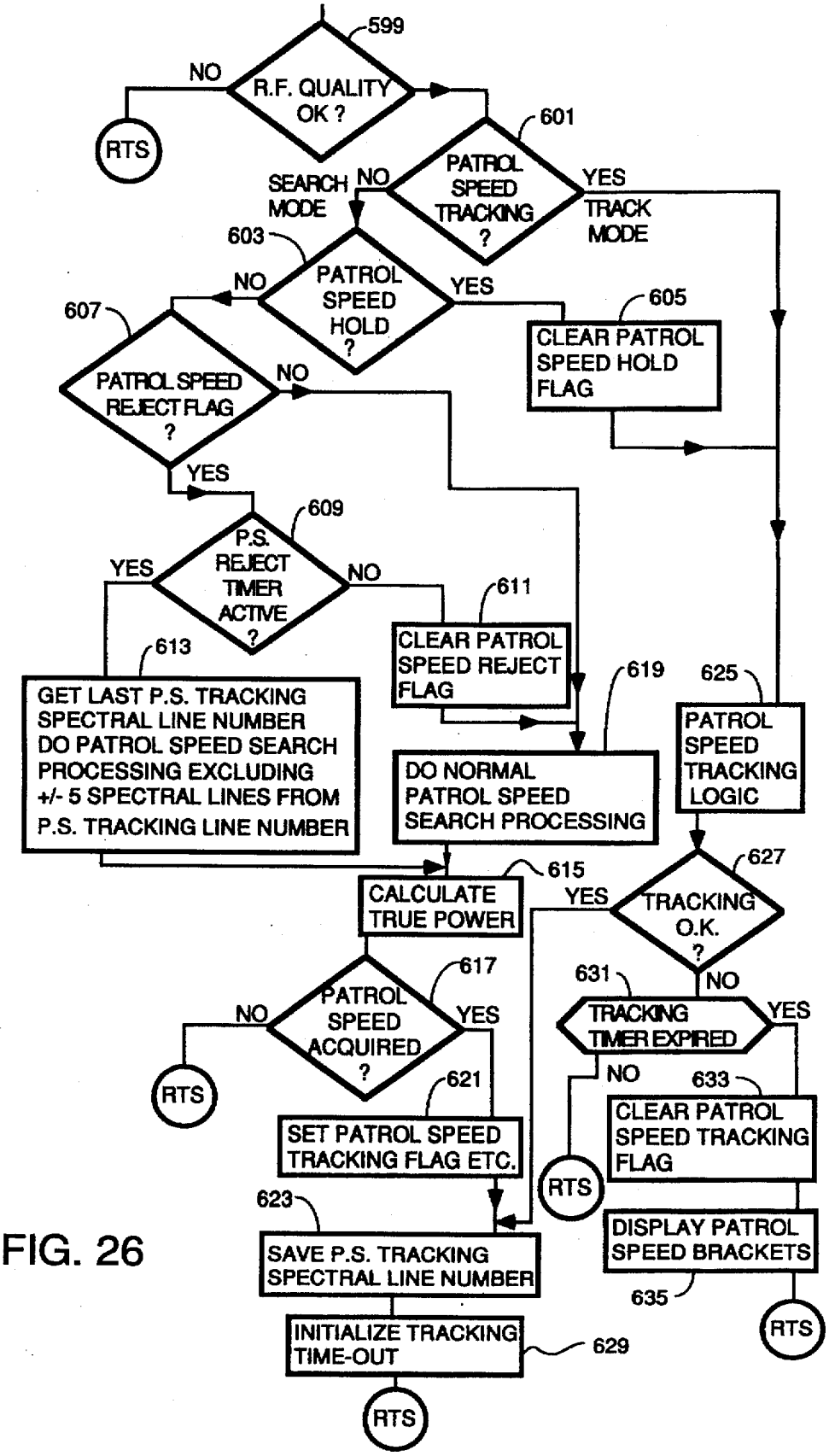
599
R.F. QUALITY OK ?
NO
RTS
601
PATROL SPEED TRACKING ?
SEARCH MODE
NO
YES
TRACK MODE
603
PATROL SPEED HOLD ?
NO
YES
605
CLEAR PATROL SPEED HOLD FLAG
607
PATROL SPEED REJECT FLAG ?
NO
YES
609
P.S. REJECT TIMER ACTIVE ?
YES
NO
611
CLEAR PATROL SPEED REJECT FLAG
613
GET LAST P.S. TRACKING SPECTRAL LINE NUMBER DO PATROL SPEED SEARCH PROCESSING EXCLUDING +/- 5 SPECTRAL LINES FROM P.S. TRACKING LINE NUMBER
619
DO NORMAL PATROL SPEED SEARCH PROCESSING
625
PATROL SPEED TRACKING LOGIC
615
CALCULATE TRUE POWER
627
TRACKING O.K. ?
YES
NO
617
PATROL SPEED ACQUIRED ?
NO
YES
RTS
621
SET PATROL SPEED TRACKING FLAG ETC.
631
TRACKING TIMER EXPIRED
YES
NO
633
CLEAR PATROL SPEED TRACKING FLAG
RTS
DISPLAY PATROL SPEED BRACKETS
635
RTS
623
SAVE P.S. TRACKING SPECTRAL LINE NUMBER
INITIALIZE TRACKING TIME-OUT
629
RTS

FIG. 26

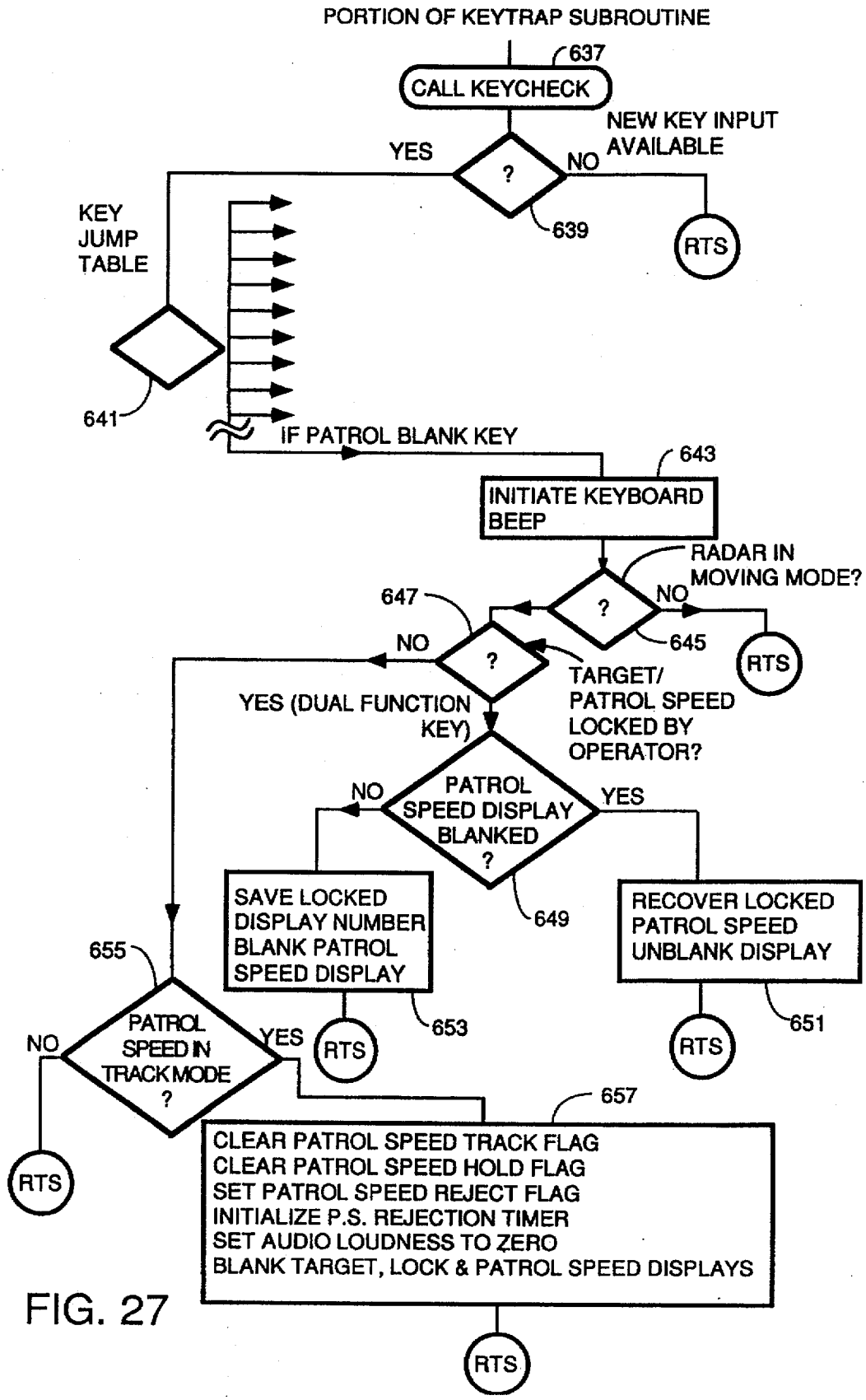
PORTION OF KEYTRAP SUBROUTINE
637
CALL KEYCHECK
NEW KEY INPUT AVAILABLE
YES
?
NO
639
RTS
KEY JUMP TABLE
641
IF PATROL BLANK KEY
643
INITIATE KEYBOARD BEEP
RADAR IN MOVING MODE?
?
NO
645
RTS
647
NO
?
TARGET/ PATROL SPEED LOCKED BY OPERATOR?
YES (DUAL FUNCTION KEY)
PATROL SPEED DISPLAY BLANKED ?
NO
YES
649
SAVE LOCKED DISPLAY NUMBER BLANK PATROL SPEED DISPLAY
653
RTS
RECOVER LOCKED PATROL SPEED UNBLANK DISPLAY
651
RTS
655
PATROL SPEED IN TRACK MODE ?
NO
YES
RTS
657
CLEAR PATROL SPEED TRACK FLAG
CLEAR PATROL SPEED HOLD FLAG
SET PATROL SPEED REJECT FLAG
INITIALIZE P.S. REJECTION TIMER
SET AUDIO LOUDNESS TO ZERO
BLANK TARGET, LOCK & PATROL SPEED DISPLAYS
RTS

FIG. 27

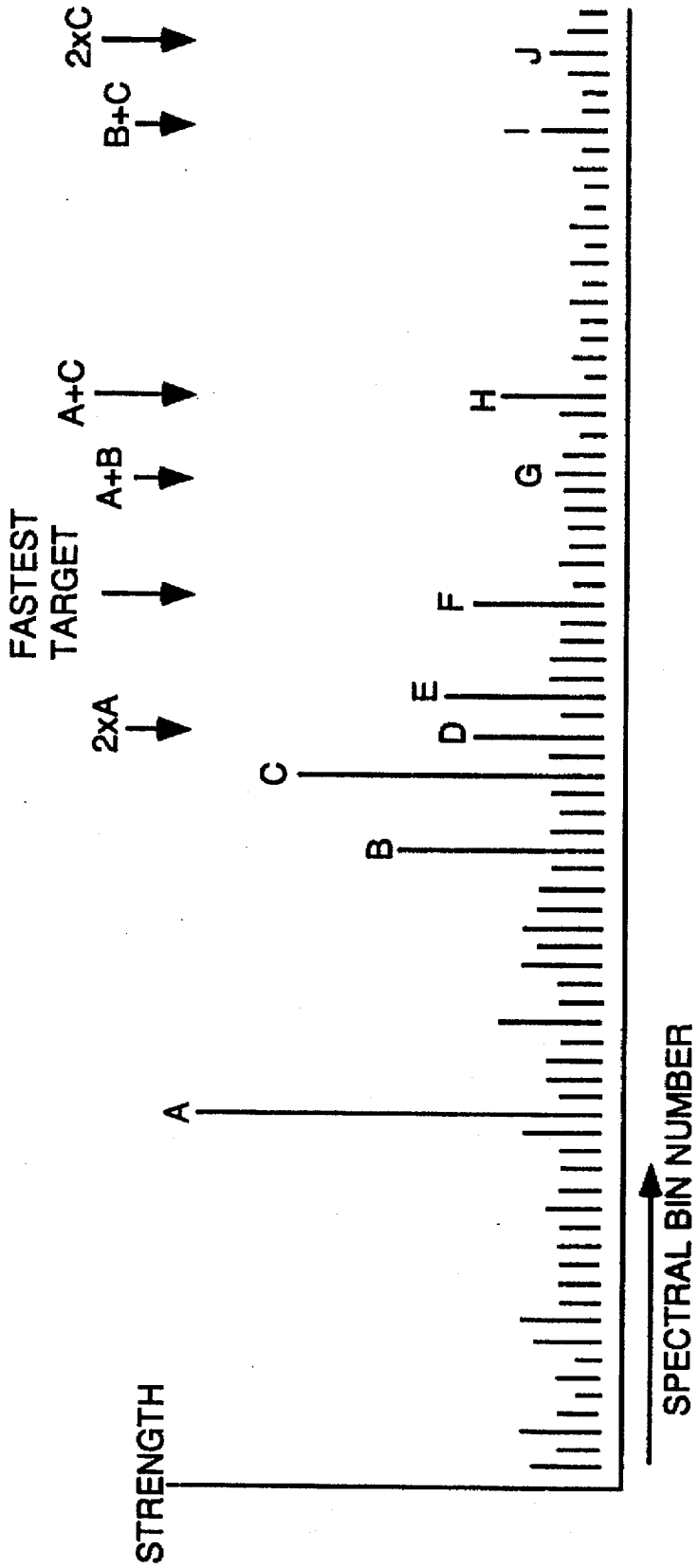
STRENGTH
SPECTRAL BIN NUMBER
FASTEST TARGET
2xA
A+B
A+C
B+C
2xC
A
B
C
D
E
F
G
H
I
J

FIG. 28

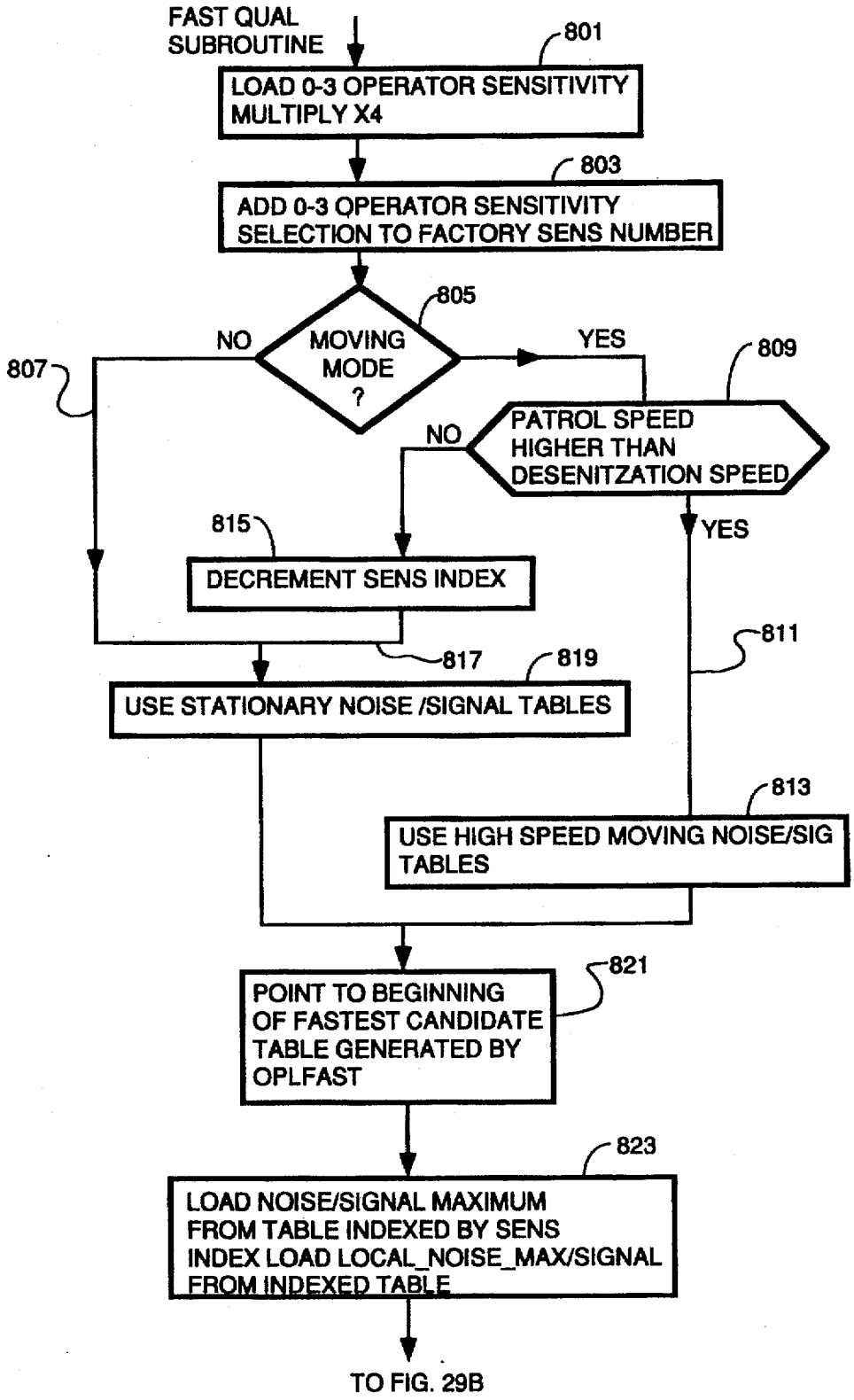
FAST QUAL SUBROUTINE
801
LOAD 0-3 OPERATOR SENSITIVITY MULTIPLY X4
803
ADD 0-3 OPERATOR SENSITIVITY SELECTION TO FACTORY SENS NUMBER
805
MOVING MODE ?
NO
YES
807
809
PATROL SPEED HIGHER THAN DESENITZATION SPEED
NO
YES
815
DECREMENT SENS INDEX
811
817
819
USE STATIONARY NOISE /SIGNAL TABLES
813
USE HIGH SPEED MOVING NOISE/SIG TABLES
821
POINT TO BEGINNING OF FASTEST CANDIDATE TABLE GENERATED BY OPLFAST
823
LOAD NOISE/SIGNAL MAXIMUM FROM TABLE INDEXED BY SENS INDEX LOAD LOCAL_NOISE_MAX/SIGNAL FROM INDEXED TABLE
TO FIG. 29B

FIG. 29A

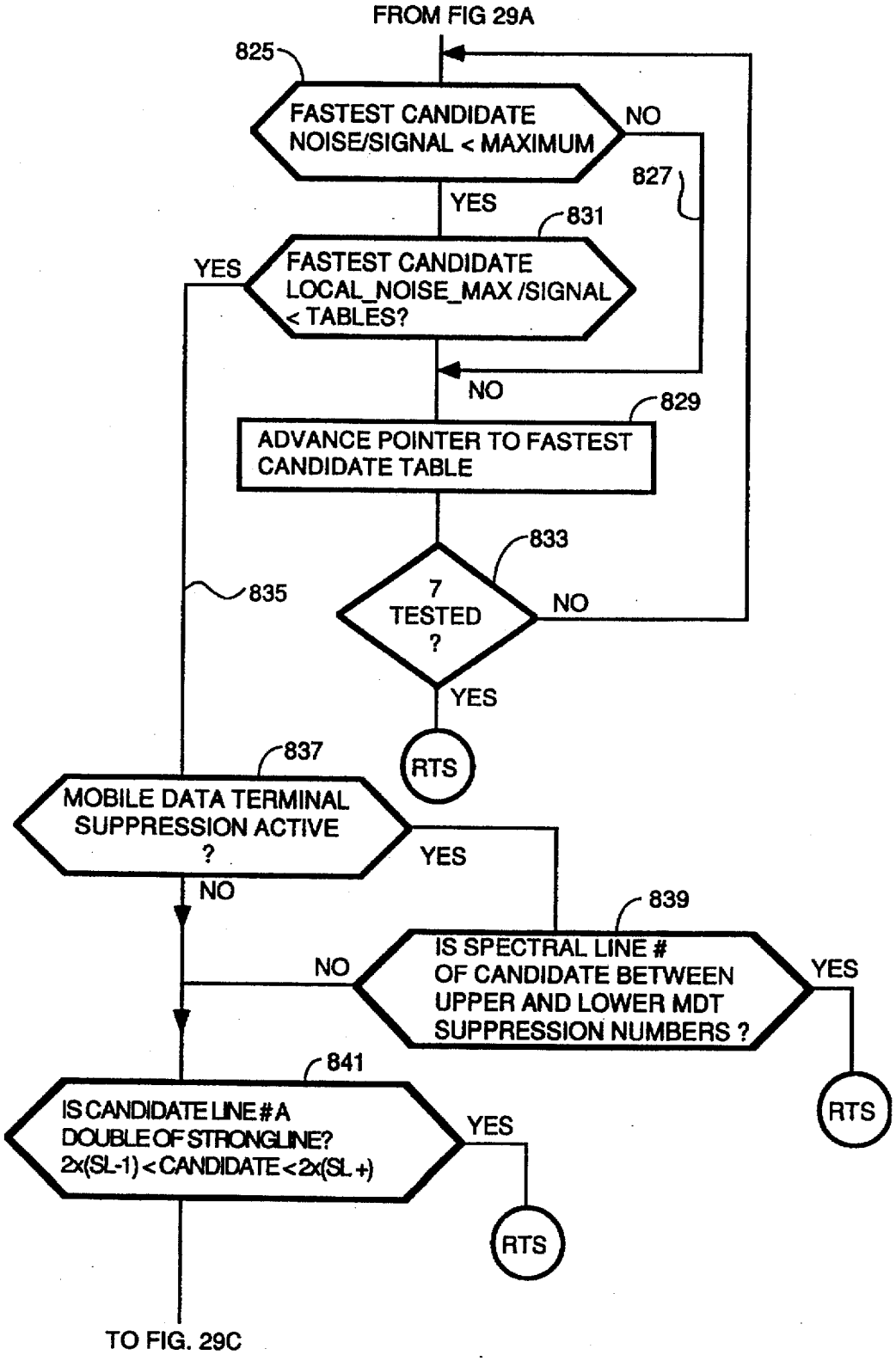
FROM FIG 29A
825
FASTEST CANDIDATE NOISE/SIGNAL < MAXIMUM
NO
827
YES
831
YES
FASTEST CANDIDATE LOCAL_NOISE_MAX /SIGNAL < TABLES?
NO
829
ADVANCE POINTER TO FASTEST CANDIDATE TABLE
833
835
7 TESTED ?
NO
YES
RTS
837
MOBILE DATA TERMINAL SUPPRESSION ACTIVE ?
YES
NO
839
NO
IS SPECTRAL LINE # OF CANDIDATE BETWEEN UPPER AND LOWER MDT SUPPRESSION NUMBERS ?
YES
RTS
841
IS CANDIDATE LINE # A DOUBLE OF STRONGLINE? 2x(SL-1) < CANDIDATE < 2x(SL+)
YES
RTS
TO FIG. 29C

FIG. 29B

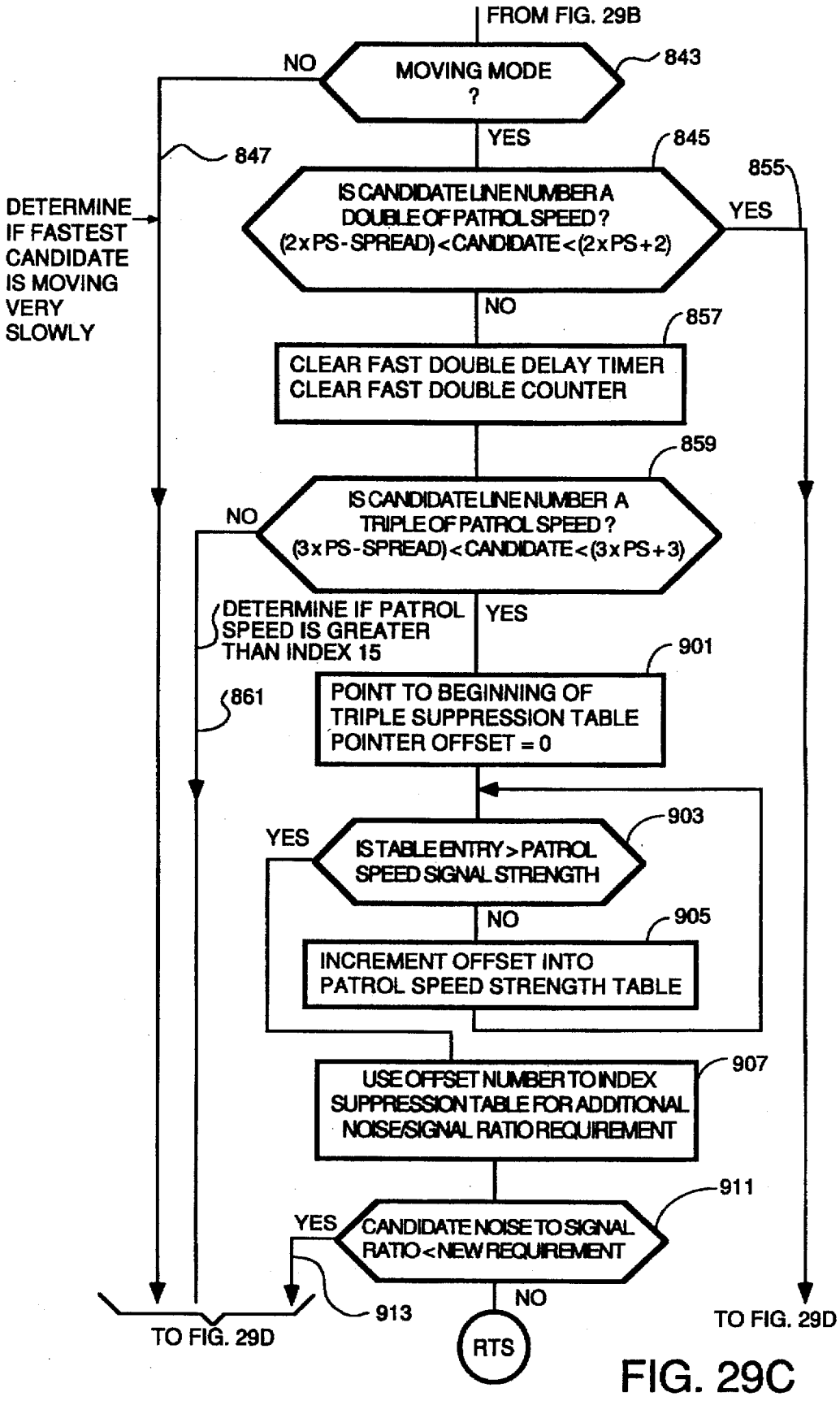
FROM FIG. 29B
MOVING MODE ?
843
NO
YES
845
847
855
DETERMINE IF FASTEST CANDIDATE IS MOVING VERY SLOWLY
IS CANDIDATE LINE NUMBER A DOUBLE OF PATROL SPEED ? (2xPS-SPREAD)<CANDIDATE<(2xPS+2)
YES
NO
857
CLEAR FAST DOUBLE DELAY TIMER
CLEAR FAST DOUBLE COUNTER
859
IS CANDIDATE LINE NUMBER A TRIPLE OF PATROL SPEED ? (3xPS-SPREAD)<CANDIDATE<(3xPS+3)
NO
DETERMINE IF PATROL SPEED IS GREATER THAN INDEX 15
YES
901
861
POINT TO BEGINNING OF TRIPLE SUPPRESSION TABLE POINTER OFFSET = 0
903
YES
IS TABLE ENTRY > PATROL SPEED SIGNAL STRENGTH
NO
905
INCREMENT OFFSET INTO PATROL SPEED STRENGTH TABLE
907
USE OFFSET NUMBER TO INDEX SUPPRESSION TABLE FOR ADDITIONAL NOISE/SIGNAL RATIO REQUIREMENT
911
YES
CANDIDATE NOISE TO SIGNAL RATIO < NEW REQUIREMENT
NO
913
TO FIG. 29D
RTS
TO FIG. 29D

FIG. 29C

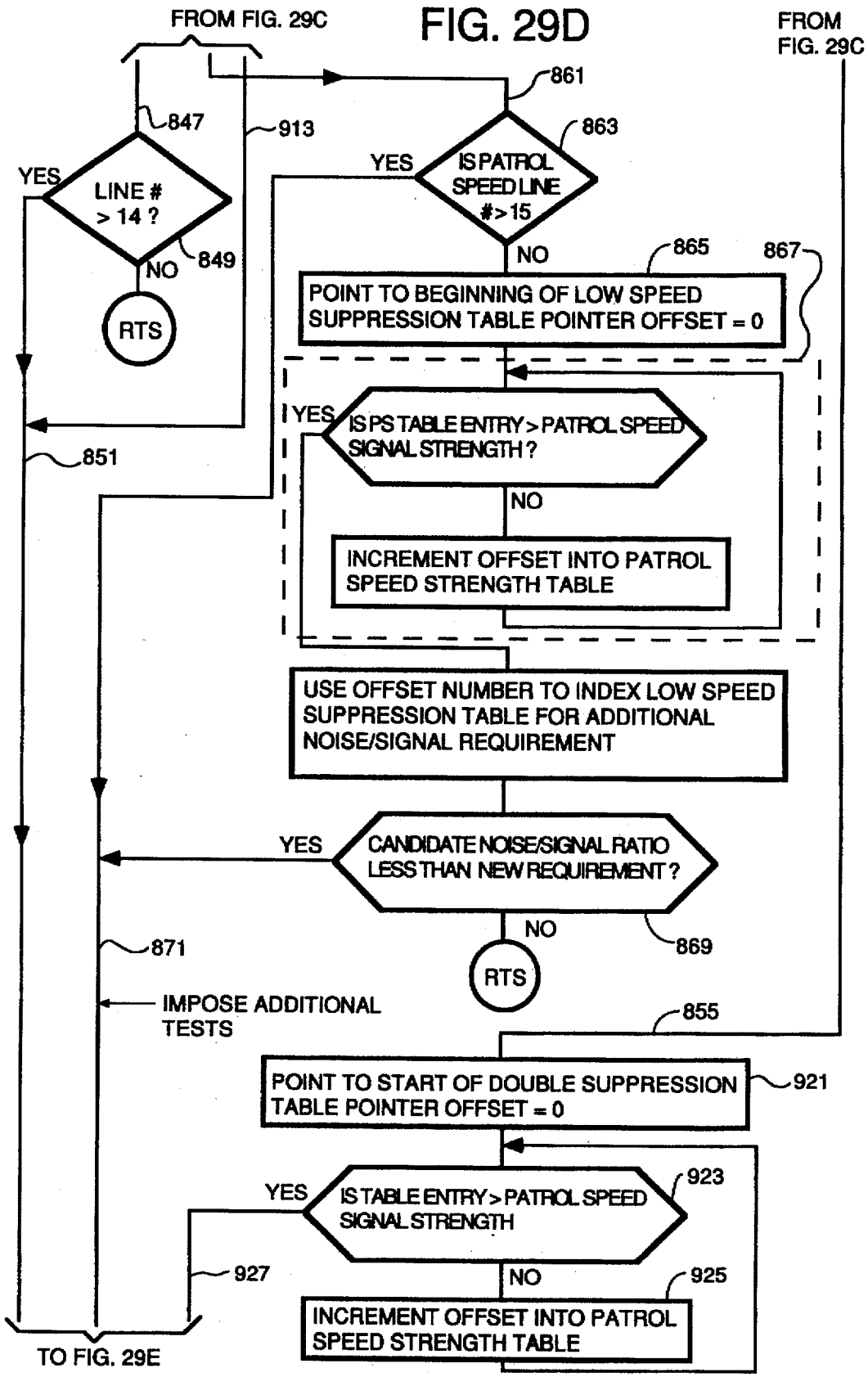
FROM FIG. 29C
FIG. 29D
FROM FIG. 29C
847
913
861
863
YES
LINE # > 14 ?
YES
IS PATROL SPEED LINE #>15
NO
849
NO
865
867
POINT TO BEGINNING OF LOW SPEED SUPPRESSION TABLE POINTER OFFSET = 0
RTS
YES
IS PS TABLE ENTRY > PATROL SPEED SIGNAL STRENGTH ?
851
NO
INCREMENT OFFSET INTO PATROL SPEED STRENGTH TABLE
USE OFFSET NUMBER TO INDEX LOW SPEED SUPPRESSION TABLE FOR ADDITIONAL NOISE/SIGNAL REQUIREMENT
YES
CANDIDATE NOISE/SIGNAL RATIO LESS THAN NEW REQUIREMENT ?
NO
869
871
RTS
IMPOSE ADDITIONAL TESTS
855
POINT TO START OF DOUBLE SUPPRESSION TABLE POINTER OFFSET = 0
921
YES
IS TABLE ENTRY > PATROL SPEED SIGNAL STRENGTH
923
927
NO
925
INCREMENT OFFSET INTO PATROL SPEED STRENGTH TABLE
TO FIG. 29E

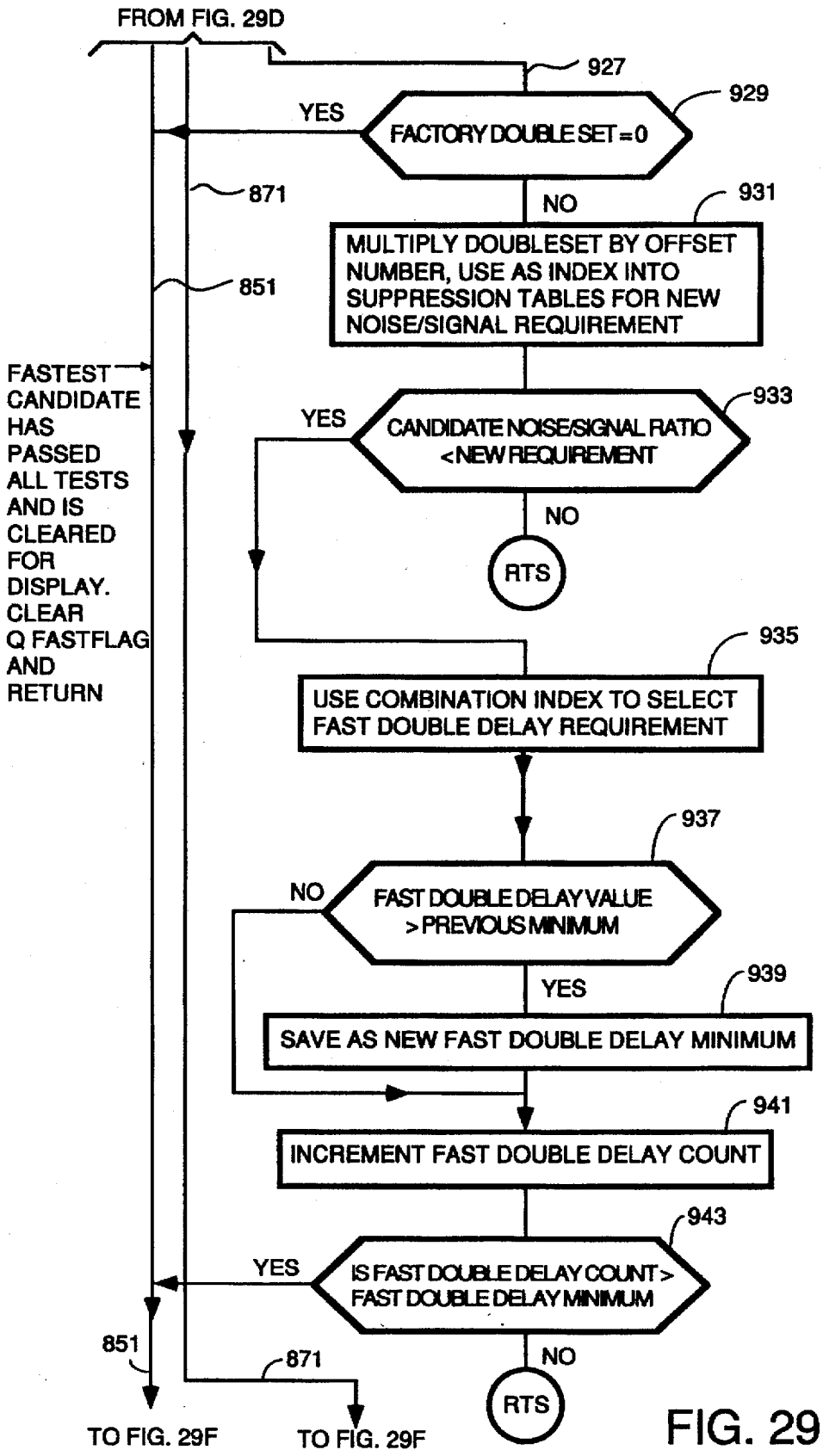
FROM FIG. 29D
927
929
YES
FACTORY DOUBLE SET = 0
871
NO
931
MULTIPLY DOUBLESET BY OFFSET NUMBER, USE AS INDEX INTO SUPPRESSION TABLES FOR NEW NOISE/SIGNAL REQUIREMENT
851
FASTEST CANDIDATE HAS PASSED ALL TESTS AND IS CLEARED FOR DISPLAY. CLEAR Q FASTFLAG AND RETURN
933
YES
CANDIDATE NOISE/SIGNAL RATIO < NEW REQUIREMENT
NO
RTS
935
USE COMBINATION INDEX TO SELECT FAST DOUBLE DELAY REQUIREMENT
937
NO
FAST DOUBLE DELAY VALUE > PREVIOUS MINIMUM
YES
939
SAVE AS NEW FAST DOUBLE DELAY MINIMUM
941
INCREMENT FAST DOUBLE DELAY COUNT
943
YES
IS FAST DOUBLE DELAY COUNT > FAST DOUBLE DELAY MINIMUM
851
871
NO
RTS
TO FIG. 29F
TO FIG. 29F

FIG. 29E

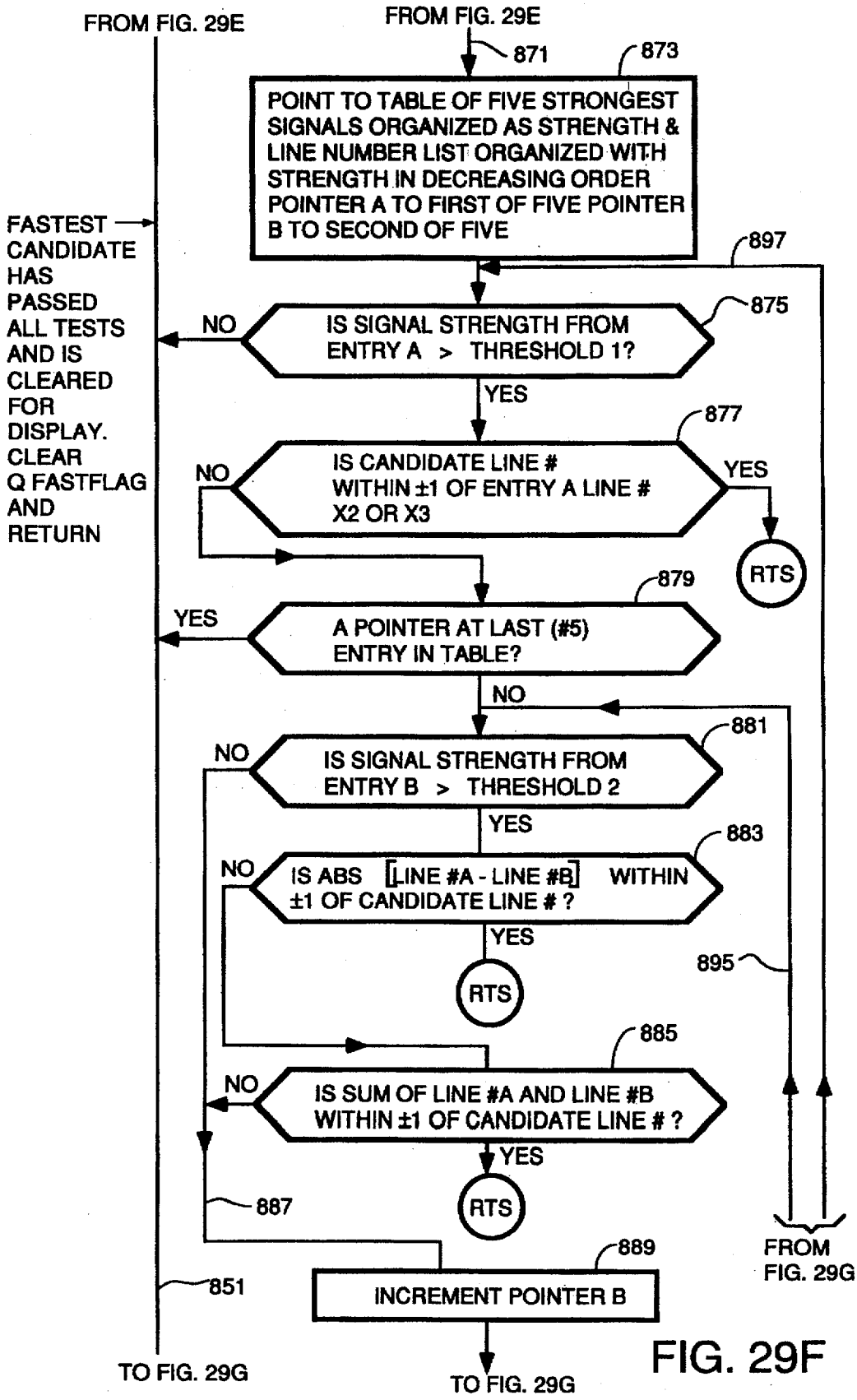
FROM FIG. 29E
FROM FIG. 29E
871
873
POINT TO TABLE OF FIVE STRONGEST SIGNALS ORGANIZED AS STRENGTH & LINE NUMBER LIST ORGANIZED WITH STRENGTH IN DECREASING ORDER POINTER A TO FIRST OF FIVE POINTER B TO SECOND OF FIVE
FASTEST CANDIDATE HAS PASSED ALL TESTS AND IS CLEARED FOR DISPLAY. CLEAR Q FASTFLAG AND RETURN
897
875
NO
IS SIGNAL STRENGTH FROM ENTRY A > THRESHOLD 1?
YES
877
NO
IS CANDIDATE LINE # WITHIN ±1 OF ENTRY A LINE # X2 OR X3
YES
RTS
879
YES
A POINTER AT LAST (#5) ENTRY IN TABLE?
NO
881
NO
IS SIGNAL STRENGTH FROM ENTRY B > THRESHOLD 2
YES
883
NO
IS ABS [LINE #A - LINE #B] WITHIN ±1 OF CANDIDATE LINE # ?
YES
RTS
895
885
NO
IS SUM OF LINE #A AND LINE #B WITHIN ±1 OF CANDIDATE LINE # ?
YES
RTS
887
889
INCREMENT POINTER B
FROM FIG. 29G
851
TO FIG. 29G
TO FIG. 29G

FIG. 29F

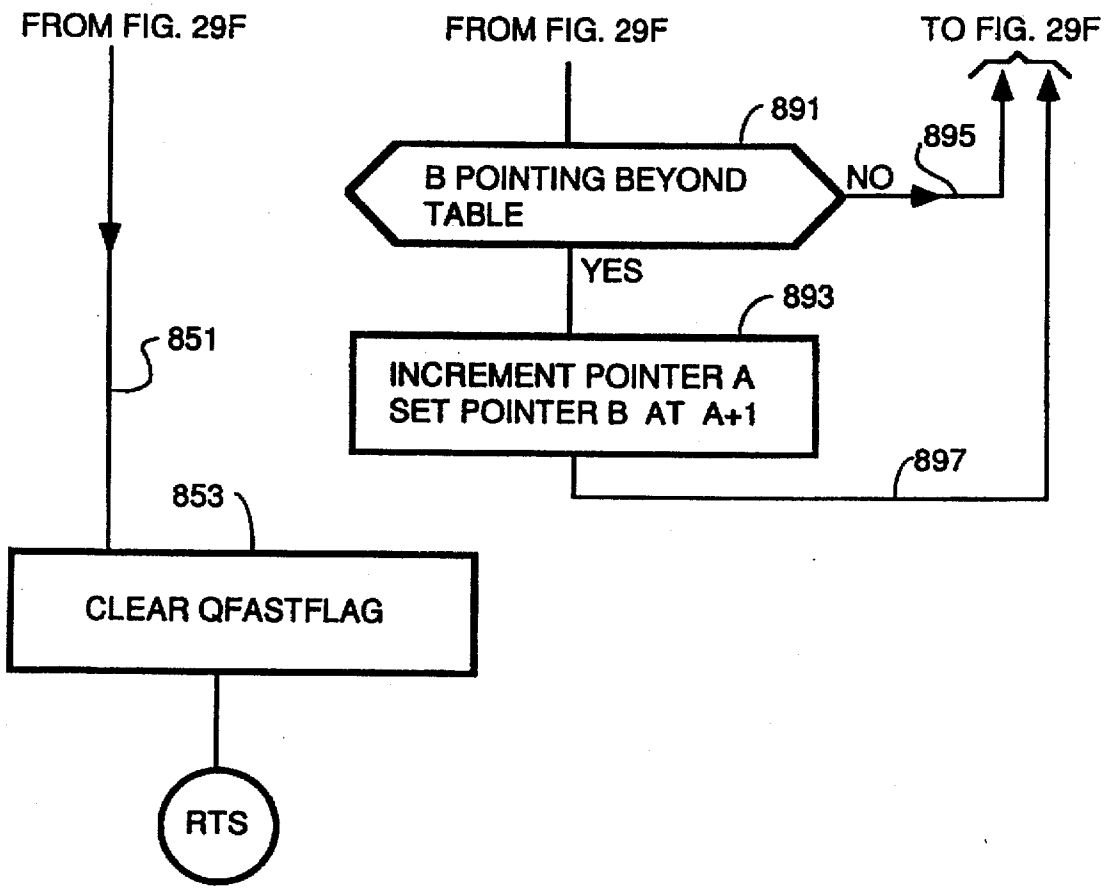
FROM FIG. 29F
FROM FIG. 29F
TO FIG. 29F
891
895
B POINTING BEYOND TABLE
NO
YES
893
851
INCREMENT POINTER A
SET POINTER B AT A+1
897
853
CLEAR QFASTFLAG
RTS

FIG. 29G

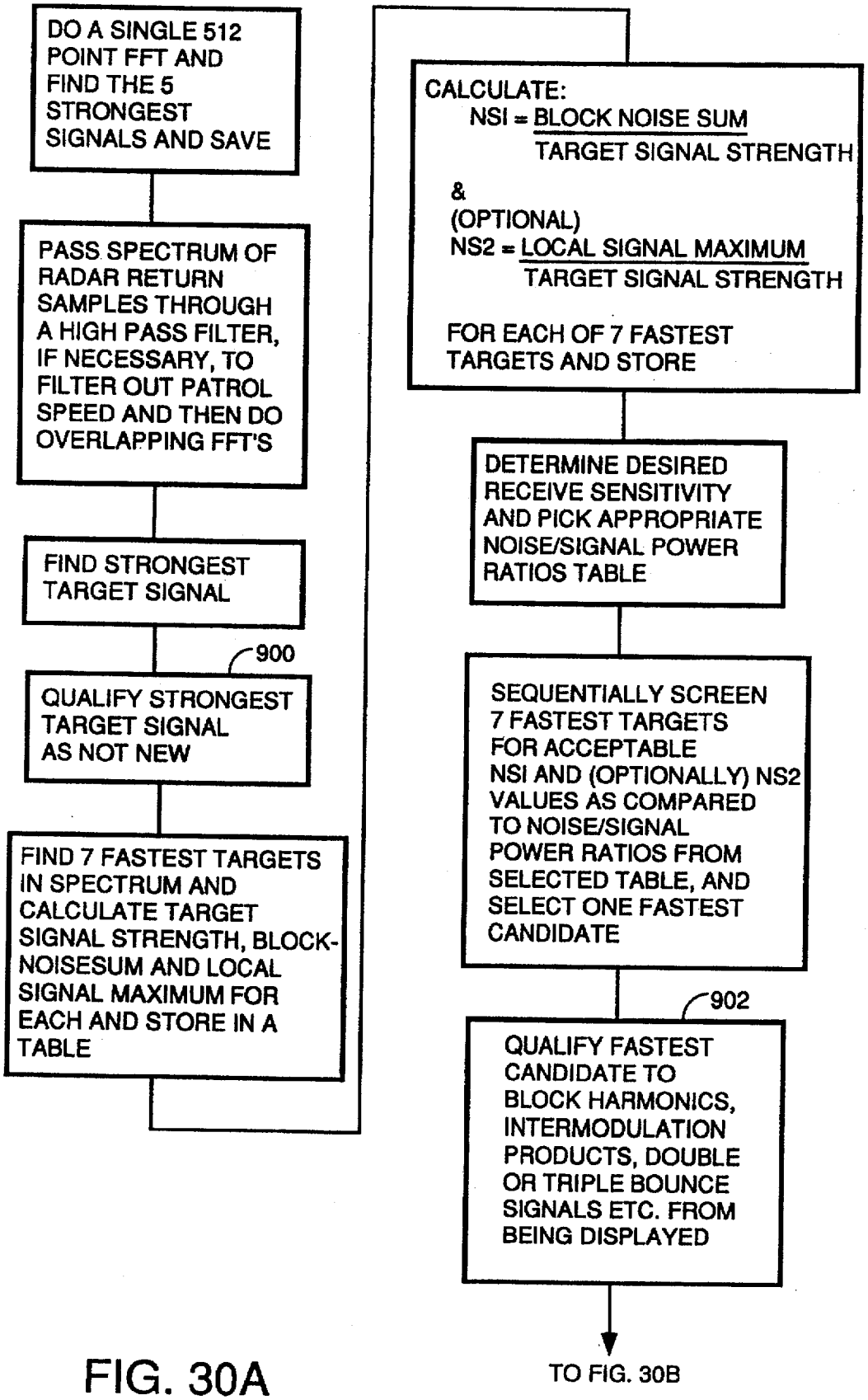
DO A SINGLE 512 POINT FFT AND FIND THE 5 STRONGEST SIGNALS AND SAVE
PASS SPECTRUM OF RADAR RETURN SAMPLES THROUGH A HIGH PASS FILTER, IF NECESSARY, TO FILTER OUT PATROL SPEED AND THEN DO OVERLAPPING FFT'S
FIND STRONGEST TARGET SIGNAL
900
QUALIFY STRONGEST TARGET SIGNAL AS NOT NEW
FIND 7 FASTEST TARGETS IN SPECTRUM AND CALCULATE TARGET SIGNAL STRENGTH, BLOCK-NOISESUM AND LOCAL SIGNAL MAXIMUM FOR EACH AND STORE IN A TABLE
CALCULATE:
NSI = BLOCK NOISE SUM / TARGET SIGNAL STRENGTH
&
(OPTIONAL)
NS2 = LOCAL SIGNAL MAXIMUM / TARGET SIGNAL STRENGTH
FOR EACH OF 7 FASTEST TARGETS AND STORE
DETERMINE DESIRED RECEIVE SENSITIVITY AND PICK APPROPRIATE NOISE/SIGNAL POWER RATIOS TABLE
SEQUENTIALLY SCREEN 7 FASTEST TARGETS FOR ACCEPTABLE NSI AND (OPTIONALLY) NS2 VALUES AS COMPARED TO NOISE/SIGNAL POWER RATIOS FROM SELECTED TABLE, AND SELECT ONE FASTEST CANDIDATE
902
QUALIFY FASTEST CANDIDATE TO BLOCK HARMONICS, INTERMODULATION PRODUCTS, DOUBLE OR TRIPLE BOUNCE SIGNALS ETC. FROM BEING DISPLAYED
TO FIG. 30B

FIG. 30A

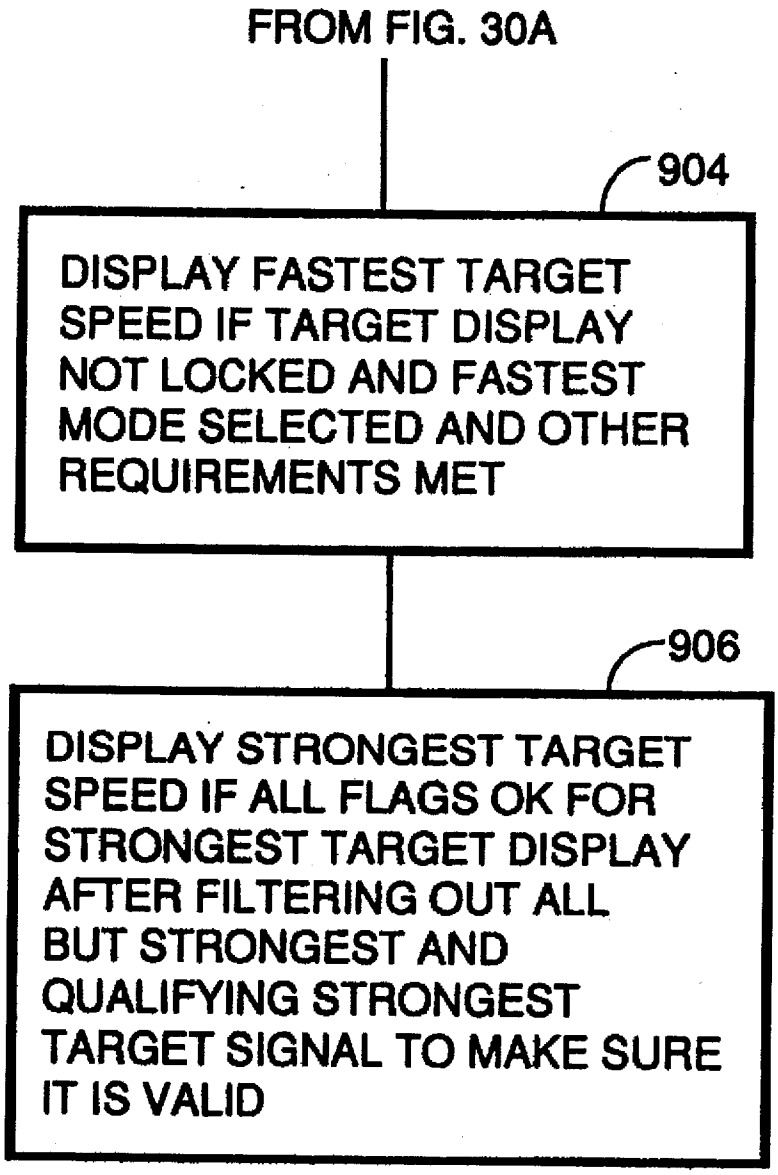
FROM FIG. 30A
904
DISPLAY FASTEST TARGET SPEED IF TARGET DISPLAY NOT LOCKED AND FASTEST MODE SELECTED AND OTHER REQUIREMENTS MET
906
DISPLAY STRONGEST TARGET SPEED IF ALL FLAGS OK FOR STRONGEST TARGET DISPLAY AFTER FILTERING OUT ALL BUT STRONGEST AND QUALIFYING STRONGEST TARGET SIGNAL TO MAKE SURE IT IS VALID

FIG. 30B

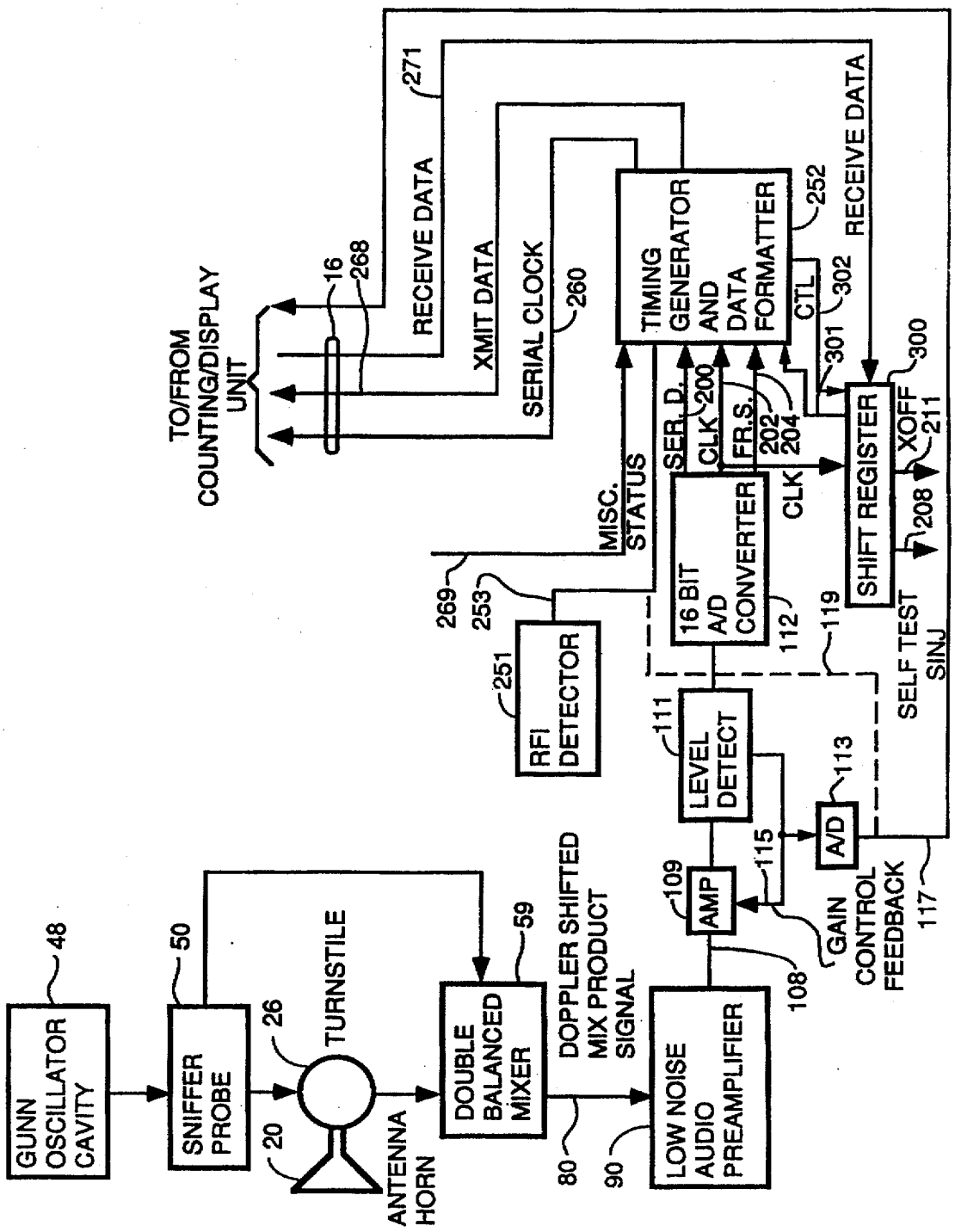
GUNN OSCILLATOR CAVITY
48
SNIFFER PROBE
50
20
26
TURNSTILE
ANTENNA HORN
DOUBLE BALANCED MIXER
59
80
DOPPLER SHIFTED MIX PRODUCT SIGNAL
90
LOW NOISE AUDIO PREAMPLIFIER
108
AMP
109
115
LEVEL DETECT
111
RFI DETECTOR
251
253
269
MISC. STATUS
16 BIT A/D CONVERTER
112
SER. D.
CLK
200
FR.S.
202
204
CLK
TIMING GENERATOR AND DATA FORMATTER
252
CTL
302
301
SHIFT REGISTER
300
XOFF
211
208
SELF TEST
SINJ
119
A/D
113
GAIN CONTROL FEEDBACK
117
RECEIVE DATA
SERIAL CLOCK
260
XMIT DATA
RECEIVE DATA
271
16
268
TO/FROM COUNTING/DISPLAY UNIT

FIG. 31

POLICE TRAFFIC RADAR USING FFT PROCESSING TO FIND FASTEST TARGET

This is a continuation of a prior U.S. application entitled IMPROVED POLICE TRAFFIC RADAR USING ABSOLUTE SIGNAL STRENGTH INFORMATION TO IMPROVE TARGET SIGNAL PROCESSING ACCURACY, filed Feb. 10, 1995, Ser. No. 08/386,552, now U.S. Pat. No. 5,570,093.

BACKGROUND OF THE INVENTION

The invention pertains generally to the field of doppler radars, and, more particularly, to the field of police traffic surveillance radars using doppler shifted radar returns to calculate speed.

Police radars have been in use for many years. Police radars output beams of microwave energy from directional antennas and collect microwave energy reflected from stationary and moving objects. The reflected microwave energy has had its frequency changed by the relative motion between the transmitting antenna and the object from which the energy was reflected by the Doppler shift phenomenon. To determine the relative speeds between the transmitting antenna (which is moving at the same speed as the patrol car or policeman which is supporting the transmitting antenna) and the objects from which the microwave energy is reflected, a sample of the transmitted energy is mixed with the reflected microwave energy in a nonlinear mixing diode. The mix products include upper and lower sidebands which represent sum and difference, respectively, between the transmit frequency and the frequency of the reflected microwave energy. Each target which reflects energy, such as the ground and a moving car, will generate a return signal with a frequency which is established by the speed of the target. The frequencies of these returns are analyzed to determine the speed of the patrol car (from the ground return or other returns from stationary objects) and the speed of the moving target with the strongest return.

The evolution of the designs of police radars to the current state of the art is probably best represented by the Stalker™ police traffic radar which is commercially available from the assignee of the present invention, Applied Concepts, Inc. of Richardson, Tex. The Stalker was the first police radar unit to convert the mix products to digital samples and send the digital data to a processor unit for analysis.

The prior art has several areas in which improvements can be made. The police cruiser is a noisy environment with radio frequency interference from the patrol car ignition system and police radio unit prevalent as well as random interference from CB radios in other vehicles. Further, the distance from the processing unit to the antenna unit is often quite large. These large distances cause the cable to pick up more noise, and losses in the cable can degrade the operation of the unit. Therefore, small cable size, good noise immunity and the ability to transmit over large distances the signals from which the patrol speed and target speed is the be calculated are important properties for an improved police radar to have.

One of the biggest problems in police radars is in insuring accurate measurement of patrol car speed and target speed. The law requires that the only target speed that is admissible evidence is the target speed calculated from the strongest signal which is not the return from a stationary object. There are several sources of strong signals that can cause erroneous radios. One is CB radios. Many CB users use illegal linear amplifiers that boost their signal power beyond the

legal limit of 5 watts. Further, CB radios that are close to the patrol car can also cause strong radio frequency interference. A way to detect this type of radio frequency interference and eliminate it is desirable in police radars. Another big problem is harmonics of the transmitted signal. The transmitted signal has even order harmonics and odd order harmonics. By far, the strongest harmonic is the 2d order harmonic, and when this harmonic is in the microwave energy that bounces off stationary or moving objects, its signal strength can be quite high and can be mistaken for a target signal. It is highly desirable to have a mechanism to eliminate the even order harmonics during processing of the returned microwave energy.

Another source of errors is intermodulation products generated in the receiving and amplifying circuits. It is highly desirable to have a way of eliminating these intermodulation products. Further, it is highly desirable to have a way of eliminating weak signals which are not valid candidates for patrol speed during processing of the return signals.

Most police radars these days do not provide any indication to the patrolman of the speed of the fastest target in the returned microwave energy if that target is not the strongest target in the radar return since the patrolman is not legally authorized to cite the driver of that target since it is not the strongest target return. It is useful to be able to satisfy the requirement of displaying the speed of the strongest target return while simultaneously displaying the speed of the fastest target in the return. This provides the patrolman with advance warning that a faster target is approaching so that when the strongest target return recedes, he or she can re-aim the radar gun at the fastest target and make it the strongest target return for purposes of citing the driver thereof.

Another problem in prior art police radars is accidental calculation of the wrong patrol car speed. This can happen when, for example, the processor locks onto a harmonic return or when the patrol car comes to a stop and another car stops beside the patrol car and then pulls away. In the latter situation, the relative speed between the patrol car and the car pulling away may be inadvertently selected by the processor as the patrol car speed. It is useful to be able to manually reject an obviously incorrect patrol car speed and force the system to lock onto a different return for calculation of the patrol car speed. Further, if it is not possible to find another candidate for patrol speed, it is useful to have a system which can override the manual input rejecting the currently displayed patrol speed and continue to display that patrol speed.

SUMMARY OF THE INVENTION

A traffic surveillance radar according to the teachings of the invention utilizes a counting/display unit which is connected to two antenna units by a serial data path implemented through a small flexible cable. The antenna units use microwave turnstiles and ring hybrids so that receiver and transmitter sections can share the same antenna horn, and use a double balanced mixer diode structure to suppress even order harmonic distortion. Received signals are amplified by an amplifier which has its gain controlled digitally through serial data received from the counting/display unit. The received signals are converted to digital serial format data words and transmitted serially to the counting display unit in a plurality of frames. Part of each frame is devoted to sample data, and part of each frame includes control data such as synchronization bits, radio frequency interference bits and antenna personality bits. Cable size is kept small by

not sending the frame synchronization signals that define the boundaries of each frame. These signals are encoded in the serial data by deleting a plurality of clock pulses of a serial clock sent from the antenna to the counting/display unit in each frame. The counting/display unit reconstructs the frame synchronization signals by detecting the blackout period of the serial clock and generating a new frame sync pulse at the end of the blackout interval in each frame.

The counting/display unit converts the serial format data to parallel format data and stores it in a data block. The sample words are processed by fast Fourier transform to generate a spectrum of lines that define the received signals. The spectrum is analyzed for signal patterns and signal strength is analyzed of the received signals. If signal strength is too low, the counting/display unit sends a gain increase command to the antenna unit which is active, but if the signal strength is too high, a gain decrease command is sent. The gain control commands are sent as serial data over the serial data link in synchronization with the serial clock transmitted from the antenna units to the counting/display unit.

The counting/display unit determines the patrol car speed from returns from stationary and moving objects by analyzing the data buffer of samples using fast Fourier analysis (FFT) to generate a spectrum of spectral lines. The spectrum is analyzed to find the 5 strongest low frequency (low speed) signals and these signals are saved for later use. The strongest of these signals will be tracked as the patrol speed, and the frequency of its spectral line will be analyzed for Doppler shift to determine and display the patrol car speed. The 5 strongest signals are then filtered out of the data buffer by application of a digital high pass filter, having its parameters set to filter out the low frequency strong signals so that they do not interfere with processing to find the strongest moving target signal and the fastest moving target signal.

Application of the digital filter to the data buffer generates another data block or spectral buffer. This spectral buffer is again analyzed using overlapping 512 point FFT's and Hamming windows to minimize end effects. The resulting spectrum is then analyzed to find the strongest moving target return that passes certain quality assurance tests. These quality assurance tests suppresses strongest target signals which do not have acceptable signal-to-noise ratios or are close to an integer multiple of patrol speed by processing them at lower sensitivity or eliminating display thereof altogether. If all quality assurance criteria are met, the speed of the strongest target return is calculated by converting the Doppler shifted frequency of its spectral line into miles per hour.

The counting/display unit also has a mode in which the fastest target signal can be simultaneously displayed in a different window from the window in which the strongest target speed is displayed. This is done by doing a top down search for the 7 fastest targets in the EFT spectrum and calculating the target signals strength, local noise power and local signal maximum quantities for each of these signals. These calculated quantities are stored in a table in descending order of speed. The fastest target signal candidate is then determined by passing the signals stored in the table, starting from the fastest target signal, seriatim through a battery of quality assurance tests until one signal passes all tests. The quality assurance tests are designed to block display of any fastest target signal which is possibly a false signal because it fails any of the following criteria: it has a signal-to-noise ratio which is too low given the current sensitivity setting of the radar unit; it is too close to another strong signal in frequency which could lead to an ambiguity as to which vehicle actually was travelling at the speed indicated by a particular fastest speed candidate signal; it may possibly have been caused by interference with mobile data terminals carried in some police cars; it has an apparent speed which is an integer multiple of the speed of the strongest target signal currently being displayed; it has an apparent speed which is either 2 or 3 times the patrol car speed and the patrol speed "true power", i.e., the power at the output of the mixer diodes, is above a certain power and the signal-to-noise ratio of the fastest speed candidate signal does not meet certain criteria or does not persist long enough in time; the five strongest signals in the FFT spectrum have signal powers above a certain level and the fastest speed candidate is possibly a harmonic of one of the signals or an intermodulation product of some combination of these 5 strongest signals. Additional threshold criteria are also imposed before the fastest target signal can be displayed. For example, it will not be displayed if the window in which it is normally displayed is displaying a locked value for the strongest target signal, or if the same fastest speed candidate has not occurred on two consecutive passes through the fast target qualification subroutine, or if the transmitter has not been on long enough, or if radio frequency interference has occurred during collection of the samples from which the fastest target signal was found, or if the strongest target's return is rapidly decreasing in frequency indicating the possibility of a false fast target caused by chirp scalloping in the FFT spectrum, or if the patrol speed was too recently acquired or is not currently being tracked. In alternative embodiments, some of these qualification and disqualification criteria may be eliminated, and the same can be said for the qualification and disqualification criteria used to qualify the strongest moving target signal as valid for display or to qualify the patrol speed as valid for display.

In alternative embodiments other quality assurance criteria may be imposed on either the patrol speed, strongest target speed display or the fastest target speed display or some of the above criteria may not be imposed.

BRIEF DESCRIPTION OF THE DRAWINGS

FIG. **1** is a block diagram of the overall system of the improved doppler traffic radar according to the teachings of the invention.

FIG. **2** is a block diagram of each of the antenna units.

FIG. **3** is a symbolic view of a microwave turnstile that allows transmitting and receiving of microwave energy from the same antenna without switching circuitry.

FIG. **4** is a symbolic plan view of the midplate and microwave turnstile structure showing the relative placements of the sniffer probe, the impedance balancing probe and the receiver probe.

FIG. **5** is a plan view of the ring hybrid and double balanced mixer diode structure on the backside of the midplate opposite the microwave turnstile waveguide structure.

FIG. **6** is a block diagram of each of the antenna structures.

FIG. **7** is a plan view of the overall midplate structure including the microwave turnstile waveguide structure.

FIG. **8** is a sectional view of the microwave turnstile waveguide structure taken along the section line **8—8'** in FIG. **7**.

FIG. **9** is a plan view drawing of the microwave turnstile waveguide structure.

FIG. **10** is a schematic diagram of the low noise preamplifier circuit that amplifies the mix product signal from the mixer diodes before gain adjustment and analog-to-digital conversion.

FIGS. 11A and 11B are a schematic diagram of the analog-to-digital converter and digital gain control circuitry of the preferred embodiment of the antenna unit.

FIG. 12 is a schematic of the RFI Detector circuit.

FIGS. 13A and 13B are a schematic diagram of the gate array logic and the transmit an receive line drivers of the preferred embodiment of each of the antenna units.

FIG. 14 is diagram of the timing relationship of the clock pulses and silent interval in every frame of serial digital data transmitted from the antenna to the processing and display unit relative to the frame sync signals that define the boundaries of each frame.

FIG. 15A is a collection of the input and output signals of the gate array logic in the antenna unit digital circuitry and the Boolean expressions that relate the input and output signals. FIG. 15B is a timing diagram showing the timing relationships between the input and output signals from the antenna gate array circuit.

FIG. 16 is a schematic diagram of the preferred embodiment of the voltage regulator circuit for the Gunn oscillator that generates the microwave energy to be transmitted.

FIG. 17 shows a graph of the power output of the Gunn oscillator versus power supply voltage.

FIG. 18 is a block diagram of one embodiment of the processing and display unit.

FIG. 19 is a collection of the signals input and output from the gate array logic in the processing and display unit and the Boolean expressions that relate these input and output signals.

FIGS. 20A1 and 20A2 and 20B1 and 20B2 are a schematic diagram of the preferred embodiment of pertinent portions of the digital circuitry of the processing and display unit.

FIGS. 21A1 and 21A2 and 21B are a schematic diagram of the preferred embodiment of pertinent portions of the analog circuitry of the processing and display unit.

FIG. 22 is diagram of how the FFT's performed on the data block overlap.

FIGS. 23A–23E are a flow chart of the fastest target processing portion of the main program loop.

FIGS. 24A–24E are a flow chart of the OPLFAST subroutine which finds the 7 fastest target returns, calculates the target signals strength, local noise power and local signal maximum quantities for each of these signals and stores them in a table.

FIG. 25 illustrates a typical FFT output spectrum.

FIG. 26 is a flow chart of the patrol speed acquisition and tracking processing.

FIG. 27 is a flow chart of the processing to receive user input to reject an incorrect patrol speed display.

FIG. 28 is another diagram of an FFT spectrum illustrating the presence of false signals caused by harmonic distortion and intermodulation products.

FIGS. 29A–29G illustrate the processing to qualify the fastest target signal for possible display.

FIGS. 30A and 30B are a flow chart of a simpler embodiment for displaying fastest and strongest target signals simultaneously.

FIG. 31 is a block diagram of an alternative antenna structure which transmits the level of amplification to the counting unit.

DETAILED DESCRIPTION OF THE PREFERRED EMBODIMENT

Referring to FIG. 1, there is shown a block diagram of the overall system of an improved doppler traffic radar according to the teachings of the invention. The improvements of the system taught herein are relative to the Stalker police radar that has been commercially available for several years from the assignee of the present invention, the technological details of which are hereby incorporated by reference. An antenna unit 10 radiates microwave energy in whatever direction it is pointed. In the preferred embodiment, two antenna units 10 and 11 are utilized. One unit is typically mounted in the front of the patrol car pointed forward and one unit is typically mounted in the back of the patrol car pointing backward. Each antenna is coupled to a counting/display unit 12 by a serial data cable capable of carrying packetized serial format data, represented by lines 16 and 18. In alternative embodiments, parallel digital data transmission may also be used. It is within the teachings of the invention to use any conventional design for said antenna units 10 and 11 and any conventional design for the counting/display unit 12 the improvement of the invention consisting of using either serial or parallel digital data communications between these units. It is further within the teachings of the invention to use hysteresis type line receivers on each digital data line passing between the antenna units and the counting/display unit 12 so as to improve the noise immunity for digital data communicated between these two units.

The counting/display unit houses a digital signal processor and associated peripheral circuitry to drive a display unit and to receive serial data from and transmit serial data to the two antenna units. The counting/display unit 12 (hereafter referred to as the "control unit") also includes software encoded in EPROM's, EEPROM's and gate arrays which control operations of the digital signal processor and parses management and control data out of the packets of serial data. The control unit 12 can be controlled by the trooper by pushing buttons on the front panel or it can be controlled by pushing buttons on a remote control 14. In the preferred embodiment, the remote control 14 is a conventional infrared remote control similar in structure to the one used to control television sets and audio equipment but including buttons for the unique modes and functions implemented in the control unit. In alternative embodiments, the remote control unit 14 can be coupled to the control unit by a cable or by UHF signals. In the latter case, the remote control has a similar structure to UHF remotes used to control satellite dish controllers/decoders such as the Echosphere 710 manufactured by the Echosphere Corporation of Inverness, Colo.

Referring to FIG. 2, there is shown a block diagram of the antenna unit such as antenna unit 10. A conventional microwave horn 20 having a conventional corrective lens 22 emits coherent microwave energy toward moving and non-moving objects in the scene in front of the antenna. Some of the microwave energy bounces off the moving and non-moving objects in the scene and returns as microwave energy 24. This energy is collected and concentrated in horn 20 and fed to a turnstile duplexer 26 (hereafter turnstile). The function of the turnstile 26 is to provide isolation between the transmitted and received microwave energy. Turnstiles are known and are described in Montgomery et al., PRINCIPLES OF MICROWAVE CIRCUITS TK6553.M637 which is hereby incorporated by reference. Basically, the turnstile is designed to allow the transmitter and receiver circuitry to share the same antenna. The physical configuration of a turnstile is shown in FIG. 3. A circular antenna port 28 coupled to four rectangular waveguides 30, 32, 34 and 36. Two of the waveguides are terminated in short circuits. The length of the circular waveguide port 28 is carefully selected such that, if waveguides 34 and 36 are

short circuited, transmit energy fed into waveguide **30** is coupled out circular antenna port **28** to the antenna but not into waveguide **32**. Likewise, received energy entering circular antenna port **28** from the antenna is coupled into received energy waveguide **32** but not into waveguide **30** coupled to the transmitter. The turnstile functions to couple right hand polarized signals in one direction, i.e., down one waveguide, couples left hand polarized signals in a different direction, i.e., down another waveguide, thereby providing isolation. When a radar signal bounces off an object, its polarization changes from one polarization to the other.

More detail about the actual structure of the turnstile used in the improved traffic radar described herein is seen in FIG. **4**. FIG. **4** is a plan view of a metal piece called a midplate which fits into the antenna structure just behind the horn **20**. The actual antenna structure is cylindrical with an outside diameter substantially matching the outside diameter of the circular horn at its maximum diameter. This maximum diameter substantially matches the diameter of the midplate. Machined into the midplate are four rectangular, orthogonal waveguides designated **38**, **40**, **42** and **44** designed for use with microwave signals at a frequency of 34.7 gHz and are useable over a bandwidth of ±500 MHz. These waveguides take the form of rectangular shaped pits machined into the surface of the midplate joined to a central plenum **45** in which an impedance matching stub **46** is formed. The impedance matching stub points up out of the page from the floor of the central plenum where the waveguides join. The outline of the perimeters of the waveguides is visible in FIG. **4** as the crucifix shaped continuous line. A metal plate (not shown) is affixed to the top of the midplate to form a ceiling of the waveguides. An opening in this metal plate into the mouth of the horn allows microwave energy to leave the plenum and enter the horn and allows energy from the horn to enter the plenum.

Waveguides **40** and **44** are terminated in short circuits and have a difference in length of 114 wavelength to provide a phase difference which converts rectangular polarization generated by the transmitter to the circular polarization that is transmitted. The circularly polarized energy is transmitted upward out of the page by impedance matching stub **46** and into the horn (not shown). Waveguide **42** joins the central plenum **45** to a Gunn oscillator cavity **48**. Waveguide **38** guides received microwave energy to the detector diodes (not shown) in the receiver circuitry. A sniffer probe **50** couples some of the transmitted energy from Gunn oscillator cavity **48** to a mixer (not shown) for beating down the received energy to determine the amount of Doppler shift that has occurred. Another sniffer probe **52** in waveguide **38** couples received energy in waveguide **38** to detector diodes (not shown). The receive probe **52** is ¼ wavelength long, but the sniffer probe **50** need not be ¼ wavelength because it is only used to sample the transmitted energy. The mixer circuitry and detector diodes are mounted on the reverse side of the midplate to be described next.

The construction details for the waveguide structure and the impedance matching stub are shown in FIGS. **7–9**. FIG. **7** is a plan view of the midplate side showing the waveguides drawn to 135% of scale. FIG. **8** is a sectional view of the midplate taken along section line **8–8'** through the turnstile area and Gunn oscillator cavity. FIG. **9** is a detailed plan view of the turnstile area and Gunn oscillator cavity.

DOUBLE BALANCED ANTENNA STRUCTURE FOR NOISE AND HARMONIC SUPPRESSION

Referring to FIG. **5**, there is shown a plan view of the layout of the double balanced ring hybrid mixer structure **59** which improves the common mode noise rejection characteristics of the traffic radar according to the teachings of the invention. The double balanced mixer structure of the preferred embodiment uses push-pull mixer diodes to suppress even order harmonic distortion. The ring hybrid structure of FIG. **5** is formed on the backside of the midplate structure shown in FIG. **4**. A ring hybrid structure **60** in the form of a circle of metal or other conductor which is electrically coupled to four electrically conductive strips **62**, **64**, **66** and **68**. Conductor **62** is coupled between the ring hybrid **60** and a feed-through conductor coupled to the sniffer probe **50** shown in FIG. **4**. Conductor **66** is coupled between the ring hybrid **60** and a feed-through conductor coupled to the received energy probe **52** shown in FIG. **4**. Conductor **64** is coupled between ring hybrid **60** and a mixer diode **70**. Conductor **68** is coupled between ring hybrid **60** and diode **72**.

The purpose of the ring hybrid **60** is to prevent coupling of any energy from the local oscillator on conductor **62** into the receive conductor **66**. Likewise, the ring hybrid **60** serves to prevent coupling of any energy received by the receiver probe **52** from conductor **66** into conductor **62**. It is also a function of the ring hybrid to insure that when there is no received signal, no local oscillator signal gets to the mixer diodes. Also, the ring hybrid serves to prevent any received signal from reaching the mixer diodes when the local oscillator is not functioning.

The manner in which the ring hybrid **60** performs its isolation function is based upon the differences in physical dimensions between the four conductive arms connected to the ring hybrid and the phase differences which result therefrom during propagation of signals from the local oscillator and receiver probes around the ring. For example, the signal from the local oscillator enters the ring hybrid at the junction thereof with conductor **62** and travels around both halves of the ring to reach the conductor **68** coupled to one of the mixer diodes **72**. Since the distance around the left half of the ring is 0.75 wavelength and the distance around the right half of the ring is 0.75 wavelength (the distances between conductive arms in fractions of a wavelength is written in the spaces between the conductors just outside the ring), the two local oscillator signals arrive in phase and are coupled into conductor **68** to the mixing diode. Likewise, the local oscillator signal reaches the other mixer diode **70** by travelling 0.25 wavelength around the right half of the ring and 1.25 wavelengths around the left half. Therefore, these two signal components reach conductor **64** in phase and couple into conductor **64** to reach mixer diode **70**. Conversely, the local oscillator signals reach conductor **66** coupled to the receiver probe **52** out of phase, because the two signals components travel **1** wavelength around the left half and 0.5 wavelengths around the right half. Because the two signals components are out of phase when they reach conductor **66**, they cancel and no local oscillator signal reaches the receiver probe **52** through conductor **66**. Likewise, signal from the receiver probe **52** enters the ring hybrid at the intersection thereof with conductor **66**. From there it travels 0.25 wavelengths around the right side of the ring to reach arm **68** and 1.25 wavelengths around the left side of the ring. Therefore, the two signal components reach arm **68** in phase and are coupled to the mixer diode **72**. Likewise, the signal from the receiver probe travels 0.25 wavelengths to conductor **64** around the right side of the ring and 1.25 wavelengths around the left side of the ring. Therefore, the two signal components reach conductor **64** in phase and couple to the mixer diode **70**. No signal from the receiver probe couples into the local oscillator conductor **62**

because the two signal components travel 0.5 and 1 wavelengths, respectively, around the ring hybrid to reach conductor **62**. Therefore, the two receive probe signal components are out of phase at conductor **62** and cancel each other out and no receive probe energy is coupled to the local oscillator.

The mixer output is shown at **80**. No local oscillator energy appears at the mixer output **80**, because the local oscillator signal on conductor **64** is 180 degrees out of phase with the local oscillator signal on conductor **68** because of the differences in path length traversed by the signals from the local oscillator around the ring hybrid before reaching the mixer diodes **72** and **70**. Conversely, the signal components on conductors **64** and **68** from the receiver probe conductor **66** are in phase (0.25 and 0.25 path lengths, respectively, from conductor **66** to conductors **64** and **68**) and therefore the receiver signal components from the mixer diodes **70** and **72** are in phase and add at the mixer output **80**. However, these signals are such low levels and at such high frequencies as to be invisible to the audio and digital circuitry coupled to the mixer output **80**. The beat frequency mix product signals propagating along conductors **76** and **78** and through 10 ohm resistors **75** and **77** are at audio frequencies and are in phase and therefore they add at the mixer output **80**. The frequency of the beat frequency components depends upon the Doppler shifts caused by the relative speeds between the patrol car and the various objects painted by the radar which cause radar returns. These Doppler shifts generally result in the beat frequency components in the audible range.

The ring hybrid structure is a push-push, double-balanced structure because of the structure of the ring hybrid **60** and the fact that the mixer diode **72** has its cathode coupled to conductor **68** while mixer diode **70** has its anode coupled to conductor **64**. The push-pull structure arrangement of the diodes is a function of the fact that the local oscillator signals reach the mixer diodes coupled to conductors **64** and **68** 180 degrees out of phase so that when one diode is turned off by the local oscillator signal, the other is turned on by it and vice versa 180 degrees later.

Best performance is obtained when the diodes are matched, but the variation between production diodes is so small that, in practice, the diodes are not matched.

The advantage of using a double balanced structure is in better signal-to-noise ratio by virtue of rejection of common mode noise. Also, lower noise results from the fact that the local oscillator signal components on conductors **78** and **76** are out of phase with each other and cancel at mixer output. This is very important because the local oscillator signal always has common mode noise on it since it is impossible to generate a noise free local oscillator signal. In the single ended mixers used in prior art police traffic radars, the mixer output contains significant amounts of noise caused by rectification of the amplitude noise components in the local oscillator signal alone.

Another significant advantage of using the double balanced mixer design is that no even harmonics are generated in the nonlinear mixer diodes. This is because the local oscillator signals arrive at the two mixer diodes 180 degrees out of phase in one mixer diode relative to the other. The elimination of the even harmonics greatly increases the sensitivity of the radar in the following way. The law requires that traffic radar display the speed of only the strongest signal. Police radars, when used while the patrol car is moving, receive returns from stationary objects from which the patrol car speed is derived, and they receive returns from moving objects from which a closing speed is derived. The speed of the target is derived from subtracting the patrol speed from the target's closing speed. The presence of harmonics in the mixer output confuses the radar, because the system cannot tell whether the harmonic signals are real targets or harmonics. The harmonics are of lesser amplitude as the harmonic number goes up. Therefore, the third and fourth harmonics are of less amplitude than the second harmonic. Unfortunately, the second harmonic can be quite strong, especially, the second harmonic of the patrol car speed. If this second harmonic is present in the mixer output and it is stronger than the other signals from actual target(s), by law the radar cannot display any target speed, even if the radar is smart enough to know that the strongest signal is a harmonic. Therefore, none of the weaker signals from targets can be displayed and the police radar is essentially blinded to these weaker signals as their returns must either be ignored or suppressed. Thus, in police radars not using the double balanced mixer design, sensitivity to weak returns is not optimal. By using the double balanced mixer design to eliminate the even numbered harmonics, the sensitivity of the receiver to weak target returns is improved because only the third and fifth harmonics remain to be dealt with. Since these harmonics are weaker in amplitude than the second order harmonic, the sensitivity of the radar is improved. The third order harmonic is suppressed by the software of the improved radar system.

In general, the received data at the antenna is sampled at typically 44 kHz and each sample results in a 16-bit serial data word produced by the Analog to Digital Converter. The ADC also generates a framing signal at the sample rate and synchronous clock signal running at 32 times the sample rate (approx. 1.8 mHz). The first **24** of each **32** clock pulses are used by a logic array (GAL—see discussion of GAL **252** below) to form a 24 bit serial word with the first 16 bits being allocated to the received data and the last 8 bits representing various status conditions (RFI, Antenna type). The microprocessor in the counter/display unit **12** includes a hardware Synchronous Serial Interface (SSI) facility for conversion between serial and parallel data formats. The SSI contains both a receive and transmit data section which is set up by software initialization to an externally clocked, 24-bit word configuration. As each serial data word from the antenna is received, a control word is shifted out from the SSI transmit section and serially transmitted to the antenna unit. The control word has 2 bits assigned to transmitter on/off control, 3 bits assigned to gain control of the analog signal amplifier in the antenna and a bit which is used to inject the self-test signal into the amplifier section. The control word is converted into parallel form in the antenna by shift register which is latched by a pulse from the GAL at the completion of each transmission.

Digital gain control of an amplifier section in the antenna is performed by the microprocessor in the counting/display unit **12**. The software structure involved in gain control consists of a Receive Interrupt routine and subroutines in the main program loop. The Receive Interrupt routine has highest priority in the interrupt structure and has a modulo 4096 address pointer which loads each received word into a circular buffer in RAM. The circular buffer is broken into two 2048 word data blocks. The most recently completed block of received data is processed by the main program loop as the next block to be processed is built by the Received Interrupt. In order to minimize the effect of transient signals introduced by step changes in the gain of the signal amplifier, the gain is only changed at the time that the received data block is completed and ready for process-

ing and a new data block is beginning. To achieve this, when the main program loop completes processing the oldest data block, it waits for the values of the interrupt address pointer to indicate that the newest block is nearly complete. Computation for gain change is made at that time and any gain changes made take effect at the start of the next data block. The Gain Analysis subroutine does a comparison within the newest data block for the absolute peak signal value within the block. The comparison does not include 64 points at the beginning and end of the data block to avoid contamination by gain change transients as mentioned above. If the peak value is less than a predefined low value, a gain increase is called for by the subroutine. If the peak is greater than a high value (typically 50% of the analog-to-digital converter or ADC dynamic range) a gain decrease is called for. In addition, if the peak value is greater than 90% of the ADC dynamic range, an overload may have occurred and an overload flag is set which notifies following routines in the main program loop that the data block is invalid. The 2048 24-bit words in the data block are also logically "ORED" into a test word at this time. If an RFI (Radio Frequency Interference) condition existed during any of the received words in the block, it will appear at the corresponding bit position in the test word and an RFI flag will be set. The received data word also has certain bit positions that are always zero. If these positions are not zero in the test word, a loss of receive synchronization is indicated and the main program will act to re-initialize the SSI.

Referring to FIG. **6**, there is shown a block diagram of the analog and digital circuitry within each of antennas **10** and **11** in FIG. **1**. Some of the microwave circuitry and waveguides have already been discussed and are represented in block form such as the Gunn oscillator **48**, the sniffer probe **50**, the turnstile **26**, the antenna **20** and the double balanced mixer **59**.

The output of the double balanced mixer **59** at node **80** is coupled to a conventional low noise audio preamplifier **90** which is integrated on the same surface as the ring hybrid using a surface mount integrated circuit. In the preferred embodiment, the low noise preamplifier utilizes a model LT1028 integrated circuit amplifier available commercially from Linear Technology with a one nanovolt per root Hertz noise specification. The remaining components of the preamplifier **90** are shown in schematic diagram form in FIG. **10**. The LT1028 integrated circuit amplifier **92** has a gain of **100** established by the resistors **94** and **96**. Resistor **98** establishes the video load impedance on the double balanced mixer. The rest of the components are optimized for best signal-to-noise performance. The amplified audio signal is output to isolation resistor **100** on line **102** to a "connector" **104** comprised of a plurality of feedthrough capacitors which serve to prevent external RF energy from getting into the preamplifier circuit. Resistor **100** isolates the amplifier from the bypass capacitance in the feedthrough connector (which shunt any RF energy on the feedthrough lines to signal ground) so as to prevent destabilization of the amplifier. Connector **104** feeds the audio signal to a digitally controlled gain control circuit **106** on FIG. **6** (also shown in schematic form on FIGS. **11**A and **11**B). Lines **101** and **103** supply power to the integrated circuit and line **105** is a common ground line which is tied to the ground of the counter/display unit **12** in FIG. **1** and to the patrol car ground. Capacitor **107** provides a 20 KHz rolloff in frequency response to prevent aliasing in the downstream analog-to-digital conversion circuitry. Capacitor **109** provides DC blocking of any DC component coming out of the mixer, and capacitor **111** provides power supply bypass to couple any RF energy on the power lines to ground. Capacitor **113** shunts any RF on the mixer output line **80** to signal ground.

Referring again to FIG. **6**, the digital gain control circuit **106** alters the amplitude level of the audio signal on line **108** from the preamplifier under control of a three bit digital signal on bus **110**. The amplitude can therefore be altered to any of 8 discrete gain levels of 9 db each depending upon the states of the three bits on bus **110**. The digital GAIN CTL signal on line **110** is plucked from the stream of data packets sent by the counter/display unit **12** to the antenna unit on bus **16**. Bus **16** is bi-directional and carries multiple streams of data packets back and forth between the counter/display unit **12** and the antenna units **10** and **11** in FIG. **1**.

Referring to FIGS. **11**A and **11**B, there is shown a schematic diagram of the portion of the antenna circuitry shown in FIG. **6** which includes digital gain control circuit **106** and analog-to-digital converter **112** (hereafter A/D converter **112**). The audio output signal PSIG of the preamplifier **90** is applied via line **108** to the inverting input of a Texas Instruments TL072 differential amplifier **114**. The output of this amplifier on line **116** is applied to the inverting input of another Texas Instruments TL072 differential amplifier **118** on FIG. **11**B. The output of amplifier **118** is applied via line **120** to the input of another Texas Instruments TL072 differential amplifier **122** connected as a unity gain phase invertor. Amplifiers **120** and **122** serve to provide push-pull inputs to the A/D converter **112** for better noise immunity and wide dynamic range. The use of the push-pull inputs to the A/D converter gives better common mode noise immunity to noise on the power supply and ground lines etc. The A/D converter **112**, in the preferred embodiment, is a Motorola 56ADC16.

The digital gain control circuit is implemented with a CMOS multiplexer **130** which has three switching control inputs labelled A, B and C and 8 output pins labelled X0–X7. The states of the three bits on bus **110** coupled to the A, B and C inputs controls which of the 8 output pins is coupled to the X pin. The X pin is coupled by line **132** to the X4 pin. The X0 through X7 pins are coupled to various sizes of gain setting input and feedback resistors for amplifiers **114** and **118** to change the gain. The output of the amplifier **114** is connected to the X pin via lines **134**, **136** and **132**. The lowest gain setting will result when the bits on bus **110** cause the X pin to be coupled to the X0 pin. In such a case, the output **116** of amplifier **114** is coupled back to the summing junction/input node **138** of amplifier **114** through 4.99 Kohm resistor **140**. Since the input resistance of amplifier **114** is set by resistor **142** at 4.99K, the amplifier is running at unity gain in this configuration. Likewise, when the bits A–C are set so as to connect the X pin to the X1 pin, 9.76K resistor **144** is added in series with resistor **140**, so the gain becomes the ratio (9.76K+4.99K)/4.99K. Similarly, when the X pin is connected to the X2 pin, 40.2K resistor **146** is coupled in series with resistor **140** so the gain of amplifier **114** becomes (40.2K+4.99K)/4.99K. Therefore, the gain of the amplifier **114** becomes successively higher as the bit pattern on bus **110** changes so as to connect the X pin to higher order pins until X is connected to X4. At that point, the only feedback resistance for amplifier **114** is the 316K resistor which causes amplifier **114** to run at its highest possible gain. When the input bits A–C are set to couple the X pin to the X5 pin, capacitor **150** and resistor **152** are switched into parallel with the RC input network for amplifier **118** comprised of capacitor **154** and resistor **156**. Since capacitor **154** and resistor **156** are fairly high impedance values in the frequency range of interest, amplifier **118** runs at fairly low gain until

capacitor **150** and resistor **152** are switched into parallel. When that happens, the impedance of the input circuit between the output of amplifier **114** and the input of amplifier **118** drops, and the gain of amplifier **118** rises. The combination of capacitor **150** and resistor **152** have the same time constant as the combination of capacitor **154** and resistor **156** so as to not alter the low frequency rolloff of the passband from the 500 Hertz established by the filter of capacitor **154** and resistor **156** and the combination of capacitor **158** and resistor **142** for amplifier **114**. This low frequency corner of the passband is also implemented by the filters in FIG. **11B** comprised of resistors **170** and **174** and their series capacitors **172** and **176**.

As the bits on bus **110** couple the X pin to the X5, X6 and X7 pins in different states of the A, B and C bits, lower and lower impedance RC combinations are connected in parallel with the RC combination comprised of capacitor **154** and resistor **156**. This lowers the input impedance from the output of the amplifier **114** to the input of the amplifier **118**. Since the gain of amplifier **118** is equal to the feedback impedance divided by the input impedance, the gain of amplifier **118** rises in 3 distinct steps since the feedback impedance established by the resistor **180** and the capacitor **182** is fixed. Thus, the gain is controlled by first raising the gain of the amplifier **114** to the maximum extent possible to maintain best signal-to-noise ratio, and then, when the maximum gain is reached, the gain of stage **118** is raised.

The overall gain of the circuit shown in FIGS. **11A** and **11B** is about 10,000 when operating at full gain.

Bias for the input lines of the A/D converter **112** is established by resistors **184** and **186** which act as a voltage divider to divide the 5 volt power supply voltage on line **188** in half. The resulting voltage of approximately 2.5 volts is applied to the A/D converter inputs at **192** and **194** by resistors **196** and **197**. Resistors **170** and **174** combine with capacitor **198** to further remove any high frequency noise on the input lines **192** and **194**.

The A/D converter **112** produces three output signals: SER D. on line **200** which is the digitized form of the analog signals on lines **192** and **194** in serial format; CLK on line **202** which is a clock pulse for every bit of serial data; and FR. S. on line **204** which is a signal which occurs every 32 bits of serial data on line **200**. The FRAME SYNC signal is used by the counter/display unit as a reference point to assemble packets of 32 bits into a parallel data word. The A/D converter only generates 16 bits of serial data, and either resends the same 16 bits out on line **200** during the second 16 bit interval or sends all zeroes. These same signals (in abbreviated form) are shown in FIG. **6** on signal lines with the same reference numbers.

A crystal oscillator **205** having a 5.7143 MHz crystal **206** generates the clock signal for the A/D converter which establishes the sample rate. The sample rate is 44.643 KHz and is set by dividing the clock rate by **128**.

In order to correctly interpret the serial data, the counter/display unit must know the sample rate and that the clock signal supplied to the A/D converter **112** is correct. To insure that the serial data was generated at a 44.643 KHz clock rate and that the A/D converter and gain control system is working correctly, the system has a self-test feature. This feature is implemented by the counter/display unit **12** in FIG. **1** injecting an analog signal of known frequency and amplitude into the analog signal input of the circuitry shown on FIGS. **11A** and **11B**. This test signal is the signal SINJ on line **208**. This signal gets coupled to the summing junction input **138** of amplifier **114** through resistor **210**. By examining the resulting serial data on line **200** when SINJ is injected, the counter/display unit can determine whether the gain control circuitry, clock and A/D converter are working correctly.

Referring to FIG. **12**, there is shown a schematic diagram of an RFI detector or RF sniffer that serves to detect the presence of interfering RF signals and signal the counting/display unit that its readings of target speeds may be invalid because of RF interference. One of the principal frequencies where RF interference is likely to occur is at about 27 MHz which is the citizen's band frequency. In order to detect radio frequency interference or RFI, the antenna unit of the traffic radar includes a tiny wire stub antenna which is coupled to an RF choke inductor **222** which has a value selected to resonant with the apparent capacitance of the antenna **220** at 27 MHz. The apparent capacitance of the antenna is represented by the capacitor **224**. This parallel tuned circuit therefore is at maximum impedance at 27 MHz and generates the maximum voltage drop across it to signal ground **226** at that frequency. The RFI detector is a broadband, low Q circuit designed to sense the presence of RFI anywhere in the band from about 27 MHz up to about 500 MHz. Resistor **228** lowers the Q of the circuit to provide the broadband response. Diode **230** is a low level Schottky Barrier detector diode that can detect signals with as low an amplitude as one millionth of a watt. The diode works best when loaded with a very high output impedance. Therefore, a 10 megohm resistor and a high input impedance FET amplifier **234** couple the cathode of the amplifier to ground. The FET amplifier **234** has a gain of **300**. The output of the FET amplifier is an analog RFI signal on line **236**.

Referring to FIGS. **13A** and **13B**, there is shown a schematic diagram of the digital circuitry within each of antennas **10** and **11** in FIG. **1**. The analog RFI signal on line **236** is coupled to an RS422 receiver **250** which is basically a comparator with hysteresis. The comparator **250** serves as an RFI threshold detector by comparing the analog voltage on line **236** to an internal reference signal which is about ½ the power supply Vcc level. When the amplitude of the RFI signal rises above the reference level sufficiently to overcome the hysteresis, the comparator **250** changes states thereby altering the logic level applied to pin **8** of a gate array logic integrated circuit **252**. This signals that RFI interference is present and the speed readings may be unreliable.

The gate array logic **252** functions as the timing generator and formatter in FIG. **6**. The purpose of this circuit is to format the data in the 32 bit frames of serial data arriving on line **200** from the A/D converter **112** into a special frame. This special frame of data includes both target speed data and management and control data. Specifically, gate array logic converts the 32 bits in every frame on line **200** into a frame with the first 24 bits representing the doppler shifted analog signal on line **254** from the digital gain control circuit **106** and the last 8 bits reserved for management and control data with an interrupt generated just before the frame sync pulse. No target speed data is lost in this process because all the target speed data in included in the first 16 bits in every frame, and the last 16 bits of every frame are either a repeat of the first 16 bits or all zeroes. The gate array logic converts the serial clock signal on line **202** of FIG. **6** to an altered serial clock signal on line **260** so that the receiving circuitry at the counter/display unit can recover the frame sync signal from the altered serial clock signal on line **260**. The manner in which this is done can best be understood by reference to FIG. **14**. Recovery of the frame sync signal by the counter/display unit **12** in FIG. **1** is used by the counter/display unit

to frame its own transmissions of data back to the antennas. In this way, only one clock can be used to synchronize transmissions of serial digital data in both directions.

FIG. **14** shows a single frame of clock signals of the modified clock signal on line **260** in FIG. **6**. The relative times of the frame sync signals which are generated on line **204** by the A/D converter **112** in FIG. **6** are shown at **262** and **264** in FIG. **14**. Between these two times, 32 clock pulses occur on line **200** in FIG. **6**. The gate array logic **252** in FIGS. **6** and **13**A serves to pass the clock pulses on line **200** along to line **260** but to delete the last 8 clock pulses of each frame. This interval of no clock pulses in every frame is represented by bracket **266** in FIG. **14**. Thus, line **260** contains, for each frame 24 clock pulses followed by an interval equal to 8 clock pulses during which no clock pulses occur. In some embodiments, the number of deleted clock pulses can be more or less than 8 so long as the interval marked by an absence of clock pulses is long enough to be detectable in the counter/display unit **12** so that the frame sync pulses can be reconstructed. No frame sync pulses are transmitted on line **260** in FIG. **6**. Instead, this "silent" interval **266** in FIG. **14** is detected in the counter display unit, and used to regenerate a frame sync pulse within the counter display unit. This is done by using a re-triggerable flip-flop to detect the silent interval, and arm a frame sync generation circuit. Then, when the next clock signal occurs, a frame sync pulse is immediately generated.

The gate array logic **252** in FIG. **6** also passes the SERIAL DATA signal from line **200** onto line **268** as the XMIT DATA signal for transmission to the counter/display unit **12** in FIG. **1** in synchronization with the SERIAL CLOCK signal on line **260**. The target speed data is contained in the bits transmitted during the first **16** clock intervals represented by interval **270** in FIG. **14**. Interval **272** is reserved for management and control data.

There are 8 control bits which are transmitted during interval **272** in FIG. **14**. Some of these are a known pattern which used as a frame reliability check by a digital signal processor (hereafter DSP) in the counter/display unit to be discussed below. In other words, the DSP looks for this known pattern of bits (several consecutive zeroes) during interval **272** as a reliability indicator to verify that the bits transmitted during that frame are probably correct and synchronization has been maintained in the transmission. Therefore, an additional function of the gate array logic is to insert the known bit pattern into the serial data stream on line **268** in FIG. **6** being transmitted to the counter/display unit during interval **272**.

In addition, one of the 8 control bits transmitted during interval **272** is reserved for the output of the RFI comparator **250**. When radio frequency interference is present, the RFI detector **251**, comprised of the circuitry of FIG. **12** plus comparator **250** on FIG. **13**A, outputs a logic 1 on line **253** to the gate array logic **252**. The gate array logic then inserts this bit into one of the control bits transmitted as XMIT DATA on line **268** in FIG. **6** during interval **272** to signal the DSP that the target speed data may be unreliable. In alternative embodiments, where the digital data path between the antenna unit and the counting unit is a parallel format data path, control and status information can be sent between these two units as parallel format bytes, or by modifications of a transmitted clock duty cycle, clock phase, clock pulse amplitude, i.e., some clock attribute with the variation of the clock attributed mapped by any form of coding to the control and status data to be sent. Separate unidirectional parallel data paths for transmitting from antenna to counting unit and from counting unit to antenna may be used in some alternative embodiments, or a single parallel data path which is bidirectional and time or frequency division multiplexed may also be used.

The other control bits can be used for such things as "personality" bits to indicate, for example, that the particular antenna connected to the counter/display unit **12** is 24 GHz as opposed to 34 GHz etc. or other items of information that the DSP must know to properly process signals received from the antennas. These bits are labelled as the MISC STATUS bits on bus **269** in FIG. **6**. Typically, these personality bits will be supplied from a hard wired source, or a register that is written at power-up time from an EPROM, EEPROM or a ROM (not shown).

A timing diagram for the relationships between the signals tha that are input and output from the gate array logic **252** in FIG. **13**A is shown in FIG. **15**B.

The counter/display unit also sends data to the antenna units to control various things. That data comes into the antenna unit on the RECEIVE DATA bus **271**. The RECEIVE DATA bits are a serial data stream which includes gain control bits, a transmit on/off control bit which controls when the traffic radar emits radar energy to paint a target, and the self test signal previously discussed. This serial data stream is applied to the serial data input of a serial-in-parallel-out shift register **300**. This shift register receives its clock signal from the clock signal generated by the A/D converter **112** on line **202** in FIG. **6**. The gate array logic **252** generates a control signal on line **302** coupled to the shift register to cause it to output the various bits in parallel format such that the gain bits are put out in parallel on bus **110** and the self-test signal SINJ is output on line **208** and the XOFF transmit control signal providing on/off control for the Gunn oscillator is output on line **211**. Some of the output signals from the shift register are coupled as inputs to the gate array logic **252** via bus **301**. The shift register therefor converts the serial format RECEIVE DATA into parallel format while simultaneously parsing out the various bits of the control word and applying the appropriate bits to the appropriate inputs.

The Boolean logic for the antenna gate array **252** is given in FIG. **15**A. The Boolean relationships between the various signals that are input and output from the gate array logic are given in the section entitled "equations". The Boolean relationships of FIG. **15**A, as with equations for all the gate array logic chips disclosed herein, were compiled using the Opal Jr. Compiler commercially available from National Semiconductor. The various logic signals that are combined using these Boolean relationships are defined by pin number in the four lines immediately above the equations sections. The first and fourth lines having numbers represent the pin numbers in FIG. **13**A upon which appears the signal having the acronym given just below the pin number or just above the pin number. The Boolean operators are represented by /=not, *=and, +=or.

Referring again to FIG. **13**A, the shift register **300** is a 74HC595 with the CTL signal on line **302** coupled to its LC input. Other signal lines corresponding to signal lines disclosed in FIGS. **6** and **11**B are given identical reference numbers. The SCI signal on line **201** is an inverted clock from the CLK signal on line **202**. The XMIT DATA signal on line **268** emanates from pin **12** of the gate array logic. The RECEIVE DATA on line **271** is coupled to pin A of the shift register **300** and shifts serial data therein to load the shift register in synchronization with the same clock signal CLK that the gate array logic **252** uses. The frame sync signal FR. S. on line **204** is coupled to the base of transistor Q1 in FIG.

13A. The RECEIVE DATA signal on line **271** comes from connector J2 on FIG. 13B, and the XMIT DATA signal on line **268** goes to connector J2. J2 is connected by a serial interface cable **16** or **18** to the counter/display unit **12** in FIG. 1. The SERIAL CLOCK signal on line **260** in FIG. **6** corresponds to the/CKO signal emanating from pin **18** of the gate array logic **252** in FIG. 13A. This signal is buffered by an RS422 differential clock buffer **301** on FIG. 13B. A 30 ohm resistor **303** matches the impedance of line **260** to the impedance of the serial data cable **16** or **18** from the antenna to the counter/display unit **12** in FIG. **1**. This impedance matching allows successful transmission of data without excessive reflection over a cable **16** which is about 25 feet long. Likewise, the XMIT DATA signal on line **268** is buffered by a RS422 differential clock buffer **305** on FIG. 13B with a 30 ohm impedance matching resistor **307**. Likewise, the RECEIVE DATA signal on line **271** is buffered by a RS422 differential clock buffer **309** on FIG. 13A. The three digital gain bits on bus **110** are output at pins **1**, **2** and **15** by the shift register **300** on FIG. 13A. The self test signal SINJ on line **208** is output by pin **3** of the shift register **300** and is a 5 KHz square wave generated by the counter/display unit. Integrated circuit **267** is a voltage regulator which supplies regulated 5 volt supply for the integrated circuits on the antenna digital circuit board.

In FIG. 13B, integrated circuit **380** is a negative voltage generator which serves to generate a negative voltage of −7 volts at terminal **382**. This is done by alternately charging capacitor **384** to ±8 volts and reversing the connections so that the terminal of the capacitor that is positive with respect to ground is connected to ground and the terminal that was formerly connected to ground is connected to the output line **385** of the integrated circuit. Switching by the integrated circuit is controlled by transistor **386** which has its base connected to the Fr. S. Frame sync signal. The resistor **388** and capacitor **390** convert the Fr.S. Signal into a pulse, and transistor **386** sharpens this pulse and applies it to the negative voltage converter **380**. This arrangement causes the switching rate of the negative voltage converter **380** to be the same as the frame rate thereby eliminating a source of noise. The negative voltage source is needed for various ones of the analog and digital circuits on the antenna analog and digital boards.

The XOFF signal on line **211** in FIGS. 13A and 13B emanates from pin **19** of the gate array logic **252** and causes the Gunn oscillator to oscillate when it is a logic 1 and stops oscillation thereof when it is a logic 0. The Gunn oscillator circuit is shown on FIG. **16**. The Gunn oscillator diode is coupled to terminal **320**. In some embodiments, a varactor diode is coupled to terminal **322** to provide a tunable Gunn oscillator. Two bypass capacitors **324** and **326** isolate the RF from the voltage regulator chip **328**. A large capacitor **340** provides stability for the voltage regulator **328** and filters any residual noise off the regulated power supply line **342** which supplies power to the Gunn oscillator diode. The voltage regulator chip **328** supplies a regulated 5.2 volts from a 7 volt supply on line **344**. Thermistor **346** adjusts the power output of the voltage regulator chip **328** so as to stabilize the power output of the Gunn oscillator under changing temperature conditions. If the thermistor were not used, the power output of the Gunn oscillator would decrease with increasing temperature. The maximum power output of the transmitter is needed for maximum range and signal-to-noise ratio. FIG. **17** shows a graph of the power output of the Gunn oscillator versus power supply voltage. At approximately 5.2 volts, the power output of the Gunn oscillator is relatively insensitive to variations in the power supply voltage. Thus, the oscillator power output will not be amplitude modulated by variations in the power supply voltage if the operating point is selected to be approximately 5.2 volts, and therefore this voltage has been selected for the operating point and the thermistor keeps the operating point stable in the flat, horizontal area of the curve.

Use of the hysteresis RS422 receivers **305**, **301** and **309** prevents the degradation in the sharpness of transition times of the digital transitions propagating on lines **16** and **18** from causing multiple "uncertainty transitions" in circuitry receiving the degraded transitions. That is, a normal transition has a very short transition time when it enters the line, but because of the resistance and capacitance of the transmission lines **16** and **18**, the short transition time gets stretched. This can cause multiple "uncertainty" transitions by comparators as the relatively long transition time of the degraded logic transition is compared to the comparator's reference voltage. The use of hysteresis type receivers prevents these multiple "uncertainty" transitions by making a transition when the threshold is crossed in one direction, and not making a transition again when a transition in the other direction is encountered until the threshold is crossed by an amount equal to the hysteresis amount.

Referring to FIG. **18**, there is shown a block diagram of the digital circuitry inside the counter/display unit **12** in FIG. **1**. A digital signal processor **400** is essentially a special purpose microprocessor that runs control software stored in EPROM **402** and/or EEPROM **404**. In most embodiments, the control program is stored in EPROM **402** and various user controllable and other parameters that may be changed from time to time are stored in EEPROM **404**. The control program is detailed in the flow charts described later herein and the actual executable binary code in included herewith as Appendix A. The code of Appendix A is ported for a Motorola 56001 digital signal processor (hereafter DSP). The control program is read into RAM **428** at power up time for faster access by the DSP. RAM **428** is also used as scratchpad memory if necessary by the DSP.

Serial data passes between the DSP and the antenna drivers and receivers, represented by blocks **406** and **408**, via a multiplexer **410**. The serial data from the DSP to be transmitted to one or the other of the antennas selected by multiplexer **410** is carried on the STD signal line in FIGS. **21A1** and **21A2**. The antenna control word (in parallel form) for transmission to the antenna in serial format is generated and modified by use of the bit-set and bit-clear instructions in various subroutines executed by the DSP. This word is transmitted by the SSI (a hardware circuit within the DSP) upon each receive interrupt generated by the SSI. A receive interrupt is generated every 24 clock bits received from the antenna. Switching of the multiplexer **410** is controlled by an antenna select signal on line **412**. In one state of this signal, the stream of digital data from antenna **1** enters the multiplexer **410** on bus **16** and leaves the multiplexer on shared output line **416** which is coupled to gate array logic **418**. In the other digital state of the antenna select signal on line **412**, serial data from antenna **2** enters the multiplexer **410** via bus **18** and is relayed to gate array logic **418** via bus **416**. Likewise, serial data to be sent to the antennas by the counting/display unit **12** is sent to the gate array **418** by the DSP **400** over data bus **422** and is transferred from there to the appropriate antenna via bus **416**, multiplexer **410** and buses **414** and **420**.

The DSP includes an SSI serial communications circuit which normally requires 4 signals for synchronous bi-directional communications (clock, receive data, transmit data and frame sync). In order to reduce cable and connector

costs and to be able to operate with a smaller, more flexible shielded cable, the frame sync signal is not communicated but is implied by gating the continuous clock into bursts of 24 clock pulses. The SSI has no mechanism for detecting external clock interval and must be initialized for synchronization during the eight-clock interval between the 24 clock pulses. To detect the interval between clock bursts the logic array (GAL) **418** on the processor board is programmed to form a re-triggerable one-shot whose delay interval is greater than that between the clock pulses within the clock bursts. The logic output of the one-shot is connected to a processor port line. A one-shot is implemented within the GAL by using 4 registers to form a 16-state counter. The 27 mHz processor clock is fed to the GAL and advances the counter state when the communications clock is in the low logic state. When the communications clock is a logic high state, the counter is reset to logic state 1 (0001). The interval between communication clocks within the clock burst is shorter than the interval required to advance the counter **15** states to state 0 (0000). However, during the 8-pulse interval, the counter in the GAL will advance and hold at state 0, indicating the end of the clock burst event to a processor port line. To establish synchronization, the SSI must be reset by software during the interval between clock bursts. Once initialized, the port state is no longer monitored by the main software loop as this is resource-intensive task for the processor. Rather, a loss of synchronization is detected by the received data pattern which has certain reserved bit positions for this purpose

As noted above, the gate array **418** serves to recover the frame sync signal from the serial data stream from the antennas and does other tasks according to its Boolean truth table which is included herewith as FIG. **19**. Basically, the gate array **418** examines the serial clock signal received from whatever antenna is currently coupled to the gate array to determine when the "blackout" period or "silent interval" **266** in FIG. **14** occurs. When the silent interval period occurs, the gate array arms itself to generate a frame sync pulse upon the next occurrence of a clock pulse. As soon as the next clock pulse occurs, the gate array **418** sends a frame sync pulse to the DSP thereby recovering the frame sync signal without requiring the actual transmission thereof by the antenna circuitry.

In alternative embodiments, other means other than clock pulse dropouts may be used to convey information such as when the frame sync intervals start and end, when radio frequency interference has been detected, antenna personality data and other miscellaneous status or control data. Such other embodiments can use any type of clock modification to encode such data including, but not limited to: variation of the clock duty cycle, variation of the clock phase, variation of the clock frequency or general variation of the clock pulse amplitudes to other amplitudes other than the zero amplitude used during the silent interval in the preferred embodiment, or any combination of the above. These variations can be assigned a code such that the data to be conveyed can be mapped to a corresponding variation of some attribute of the clock signal.

The gate array **418** also recreates a serial clock signal by using the received clock signals from the antennas and generating additional clock signals timed so as to continue the periodicity of the clock signals received from the antennas and sufficient in number to fill in the silent interval. This reconstructed clock signal is provided to the DSP for purposes of synchronizing outgoing serial data transmissions to the antennas to the same clock signal to which the incoming serial data was synchronized. This allows the DSP to send serial data to the antennas like gain control bits, transmitter oscillator on/off control bits, and self test signals using the same clock signal the antennas use. This minimizes the number of wires that need to be in the cables **16** and **18** in FIG. **1** and simplifies the circuitry in both the antennas and the counter/display unit **12**.

In alternative embodiments, gate array **418** also serves to convert the serial format data on buses **16** and **18** containing the digital data samples of the audio output of the mixer diodes into parallel format on parallel bus **422** in FIG. **18**. In the preferred embodiment, the serial-to-parallel data conversion is performed by a UART type circuit called the SSI integrated within the DSP. In the preferred embodiment, shown in FIGS. **20A1** and **20A2**, **20B1** and **20B2**, **21A1** and **21A2** and **21B** and unlike the embodiment shown in FIG. **18**, the serial data from the selected antenna is output by the multiplexer **410** (see FIGS. **21A1** and **21A2**) as the SRD signal on line **417**. This serial data signal on line **417** is coupled directly to an input of the DSP **400** (see pin **42** on FIGS. **20A1** and **20A2**) and contains the 32 bit frames received from the antenna. Of these 32 bits, 16 bits are digital sample data from the A/D converter representing the analog signal output by the mixer diodes in the selected antenna and 8 bits are control data such as the RFI bit. The DSP hardware converts this serial data stream to a 24 bit parallel format digital word and stores it in an array of 24 bit words in RAM. The DSP then parses out the control data from each word using an SSI command, and uses the 16 bits of digital sample data for performing the Fast Fourier Transform. The spectral components from the FFT analysis are then used to calculate patrol speed, target speed of the strongest target return and target speed of the fastest target in a multiple target environment.

The DSP also has an optional speedometer interface **424** in some embodiments through which the DSP can read the actual patrol car speed for purposes of comparing this speed to the "patrol speed" derived from the radar returns of stationary objects. The software of Appendix A does not use the actual speedometer speed as the patrol speed because this is not accurate enough. Instead, the patrol speed is derived from the Doppler shifted radar returns from the ground. This is done by using the strongest radar return over time and assuming this is the return from the ground. Basically, the ground return is usually the strongest radar return although when targets get close, their returns become stronger for a short time than the ground return but then the target return goes away altogether. The software therefore assumes that the strongest return over an interval which is longest enough to distinguish over transitory target returns, is the return from which the patrol speed is derived. The software also includes the ability to compare the calculated patrol speed from the return selected in the above described manner to the speed read from the speedometer, and, if the difference is greater than 3 MPH, to discard the calculated patrol speed and re-calculate it from a different radar return.

Moving radar Doppler systems with no independent input of patrol speed information sometimes suffer from a condition called "shadowing". Shadowing usually occurs after patrol speed tracking has been lost, for example, when the patrol vehicle momentarily halted, and the patrol speed tracking system attempts to track a moving vehicle, resulting in a erroneous display of patrol speed. The Doppler signal related to patrol speed is normally a fairly strong signal, as disclosed in U.S. Pat. No. 3,936,824 which shows a method for filtering out the patrol speed signal in order to measure a weaker target signal, said patent being hereby incorporated by reference. If patrol speed tracking has been lost, the

likelihood of shadowing is reduced by a requirement that the signal strength of a patrol speed candidate be greater than a certain minimum value in order to be acquired and tracked. Once in tracking mode, patrol speed performance is improved by a requirement that the patrol speed signal value be greater than a certain second minimum signal value in order to maintain tracking mode. For example, it sometimes happens that the system will lock onto the wrong radar return in calculating the patrol speed. This often happens at stop signs where the ground return is lost when the patrol car stops. If another car pulls away from the patrol car, the radar may lock onto the return from the other car and assume it is the patrol speed. One of the novel features of the system is the ability to manually reject a displayed patrol speed which is probably incorrect. When the trooper sees the improper patrol speed displayed, he or she can push a button on the infrared remote or the front panel keyboard that sends a signal to the DSP telling it to reject the calculated patrol speed and to lock onto another return and calculate the patrol speed from that return. A more detailed discussion of how this is done is included below in the discussions of the flow charts.

A 10 KHz clock signal is provided to the DSP by oscillator/divider **426**. Each time this clock signal occurs, an interrupt service routine is performed to examine the state of the HEN input at pin **8** of the DSP chip on FIGS. **20A1** and **20A2**. This HEN signal is an OR function of three possible signal sources and is generated by the OR circuit **475** on FIGS. **20B1** and **20B2**. This OR circuit has three inputs. The HANDC input is from the infrared receiver which is triggered by the infrared hand controller. The SWDATA input is from an infrared switch encoder (not shown) which is hardwired to a plurality of front panel switches. The HCDATA input is an input from a hardwired hand controller connected to a rear connector on the unit. All three of these inputs will carry RC-5 bi-phase serial bitstreams.

The DSP has a watchdog timer **430** which is continually reset by a periodic pulse on line **432**. If there is a software crash, and the DSP becomes non-operational, the watchdog timer **430** does not receive its pulse on line **432** and the timer therefore issues a RESET signal on line **434** which causes the DSP to reset and start over from the top of the control program.

The DSP drives a conventional LED display unit **440** which has at least two LED display windows to display the target speed and a "fastest" speed. The displayed target speed is the calculated speed of the strongest signal in the collection of radar returns. The "fastest" speed displayed on the counter/display unit **12** is the speed of the fastest target return in the collection of returns even if this is not the fastest speed. The display unit **440** also has various icon displays that are lighted to indicate what mode of operation the machine is in or machine status. Data controlling what is displayed is sent by the DSP to the display unit via bus **442**. Display **440** in FIG. **18** includes two multisegment LED drivers, one for each of two LED windows on the front panel. Each multisegment driver receives serial data on one of the lines of bus **442** and a clock signal on one of the other lines of the bus. The multisegment driver latches the data, decodes it and generates appropriate segment drive signals for the LED segments to display the data.

The function of the DSP **400** and its control software in FIG. **18** is, among other things, to perform a Fast Fourier Transform on the serial data stream arriving from the antenna to derive the patrol speed and the closing velocity of the strongest target signal as well as the closing velocity of the fastest target speed. The incoming digital data from the antenna is a digital representation of a very complex waveform which includes returns from stationary objects and returns from objects that are moving relative to the patrol car as well as harmonics. The patrol speed is derived by finding the strongest Fourier component and correcting for the effect of the gain control adjustment to derive the true signal power of the return represented by the strongest Fourier component. Target identification is performed using an algorithm that compares the amplitude level of a Fourier component which is thought to represent a target return to the amplitude levels of the Fourier components in the neighborhood of the selected Fourier component to determine if a minimum difference exists. In the preferred embodiment, the amplitudes of the neighboring Fourier components are averaged and the average is compared to the amplitude of the Fourier component under investigation as a possible target return. If a minimum difference of 10 db exists between the average and the return under investigation, it is deemed a valid target return. As such, this target analysis algorithm processes signal-to-noise ratio as opposed to absolute amplitude. Selection of the Fourier component thought to represent a target return is based upon relative amplitude since only the speed of the strongest return that is not patrol speed is legally admissible.

In the preferred embodiment, the DSP sets the gain level of the system at some value and accumulates 2048 samples in a data buffer in RAM **428** in FIG. **18**. These samples are a digital representation of a segment of the analog signal from the mixing diodes which contains all the information regarding the patrol speed, any target returns and any harmonics that are present. The 2048 samples are then analyzed using a Fast Fourier Transform and the Fourier components are analyzed to determine if they fall within an acceptable range of amplitudes, i.e., not too weak nor too strong. If all the Fourier components do not lie within the acceptable range of amplitudes, all the samples are discarded and 2048 new samples are collected after the DSP sets the gain level of the system to a new value and the process is repeated. The Fast Fourier Transform (hereafter FFT) is performed on the 2048 samples by doing seven consecutive FFT's, each being performed on 512 samples with a 50% overlap. In other words, the first FFT is performed on the first 512 samples, and the second FFT is performed on another 512 samples starting with the 257th sample in the buffer. The third FFT is performed on 512 samples starting with the sample 256 samples further into the buffer.

In the preferred embodiment, Hamming Windows are used to improve the quality of the Fourier analysis by minimizing edge effects. Referring to FIG. **22**, there is shown a conceptual diagram of how the Hamming Windows overlap. Each of the curved components labelled 1 through 7 is a Hamming window which supplies weighing coefficients to each of the 512 samples in the FFT. Thus, the first sample has a Hamming coefficient that is less than the second sample and so on. Likewise, the Hamming weighing coefficient for the 256th sample (designated at **500** in FIG. **22**) is at a maximum in the first FFT and a minimum in the second FFT. Since noise components randomly go up and down, and since the results are averaged over the 2048 samples, the noise components tend to cancel out and a slight improvement in signal/noise ratio results. The seven Hamming Windows shown in FIG. **22** represent the seven overlapping FFT's that are performed.

After performing these seven FFT's, the results of the seven FFT's are then averaged. This reduces the contamination of the spectrum in the form of smearing, i.e., false energy in "bins" on either side of a legitimate spectral line

or "bin", caused by the false model of 2048 samples with signal power falling to zero on either side of the 2048 sample group. This "end effect" is reduced by use of the Hamming Windows described above.

When 512 samples are used for an FFT, the result is 256 frequency points in the spectrum, each point represented by a real and imaginary component. The magnitude of each frequency component so represented is equal to the square root of the sum of the squares of the real and imaginary components. However, since the police radar system is interested in determining the signal power of the strongest signal, and since signal power is the sum of the squares of the real and imaginary components, the DSP calculates only the sum of the squares of each frequency component so as to determine the signal power of each of the 256 components.

Each spectral line output by the FFT is output as with a real and imaginary component. The sum of the squares of these components yields the apparent power of that spectral line. The apparent power of each spectral line is computed. After the power of all FFT spectral points resulting from the 2048 sample buffer has been calculated, the spectral point with the highest apparent power is determined for purposes of searching for a patrol speed candidate. The power of that spectral line or frequency component is then recalculated to take into effect the gain level applied to the entire 2048 data block or sample buffer (the gain set by the signals on bus **110** on FIG. **11**A). This power adjustment is made based upon the relationship of equation (1) below.

$$(1)\ T=A\times 10^{(G/10)}$$

where

T=true power at the output of the mixer diodes

A=apparent power

G=the gain adjustment in decibels applied on bus **110** to the entire 2048 sample buffer.

Using equation (1), the true power of a signal can be determined from the apparent power calculated by the FFT and the gain value that was in effect when the 2048 samples from which the apparent power was calculated were collected. The reason that this is done is that it has been observed that at a certain level of true power of any particular frequency strong signal at the output of the mixer diodes, double bounce false signals, harmonically generated false signals and intermodulation false signals usually are generated from the strong signal.

The foregoing algorithm is not used in calculating target speeds. For target processing, the power of each spectral component, I.e., bin, is compared to the power of some of its neighboring spectral components to determine if it is a legitimate target return or just noise. This is done by selecting a particular bin out of the 256 bins returned by each FFT or out of the power averaged bins after the results of the 7 overlapping FFT's have been averaged and comparing the power thereof to the average power of 8 of its neighboring bins. In doing this comparison, the power in the 2 immediately adjacent bins of the selected bin is ignored. This done because of the possibility of power smearing as described above resulting from deviation between the assumed signal model and the actual signal. Also, sometimes signals have frequencies that sit between bins of the FFT, and this results in some of the energy from the signal spilling into neighboring bins. The power in the next 4 higher bins is then calculated as is the power in the next 4 lower bins, excluding the 2 immediately adjacent bins. In some embodiments, the power from these 8 bins is averaged and in some embodiments, the sum of the 8 bins is used knowing that this sum is 8 times higher than the average. The power in the selected bin must be 10 db higher than the average power of the 8 neighboring bins to be selected as a target return. In the case where the average power of the 8 bins is not calculated, the power in the selected bin is multiplied by 8, and the result is compared to the sum of the power of the 8 bins to determine if it is 10 db higher.

In some embodiments, after all the targets are located in this manner, the absolute or true power of each target is calculated using equation (1) above and the gain adjustment that was in effect when that target return bin power was calculated, and the strongest target return is analyzed for Doppler shift and the resulting speed is displayed as the target speed in the target speed display window on the front panel of the counter/display unit. The other target returns are also examined to determine which is the fastest target, and that fastest target speed is displayed in another display window on the front panel of the counter/display unit.

Signal power has an effect on distortion with stronger signals causing more distortion if linear ranges of the various mixer diodes, amplifiers etcetera are exceeded. Distortion causes harmonics. Since the strongest signal return is usually the patrol speed, harmonics of the patrol speed are quite prevalent and can appear to the system as targets. The system therefor guards against this possibility by using more stringent qualification criteria for "signals" that have apparent speeds that are two times and three times the patrol speed. Such potential targets are scrutinized to determine if the signal power is greater than the signal power of the neighboring bins by a factor which is even greater than 10 db. Typically 15 or 20 db will be used, but in other embodiments other factors may be used. In the preferred embodiment, more stringent scrutiny is applied at harmonics of the patrol speed spectral component if the gain adjustment used for the buffer of samples from which the patrol speed was calculated was a large downward gain adjustment. Such a large downward gain adjustment means that the signals received at that time were very strong which leads to a higher possibility that harmonics of the patrol speed were generated. Harmonics of the target are not usually a problem. However, when the patrol car is moving, the patrol speed is a strong return, and, although it is removed from the spectrum after the patrol speed is calculated, the harmonics of the patrol speed are not removed and can be misidentified as target returns unless they are suppressed by applying more stringent target qualification criteria thereto.

The foregoing concepts are better understood by reference to FIG. **25** which shows a typical Fourier component spectrum resulting from FFT analysis of a buffer of digital samples of the output of the mixer diodes. The solid curve indicated generally at **501** is a plot of the Fourier component spectrum where each dot is one bin or one frequency component result from the FFT. Each dot has a power level, represented by its position on the vertical axis and a frequency, represented by its position along the horizontal axis. The large power point at **502** represents the patrol speed, and the smaller power point at **504** represents the speed of the target (the radar is shown as operating in "opposite lane" mode where the patrol speed is less than that of the target relative closing speed shown at **504**). A harmonic of the patrol speed is shown at **506**. Even though the sin x/x filter response of an FFT is not a particularly good filter, it is adequate and computationally efficient. Therefore, an FFT is used to calculate the points on solid curve **501** in FIG. **25** because it takes much less computer time to calculate the points than it would to calculate them using a

computer model of **256** elliptical filters. However, in other embodiments, other filter models can be used. Once the patrol speed is determined, the DSP and its control software effectively filter out the patrol speed return at **502** by superimposing a high pass, high quality elliptical filter response with a zero placed at the center frequency of the patrol speed (the zero is shown graphically at **508**) over the FFT calculated spectrum. The DSP then removes the patrol speed spectral components by applying the elliptical filter response shown by the dashed curve **503** to the various frequency components. When the patrol car is in the same lane as the target, the radar is informed of this fact by the patrolman and applies a low pass elliptical filter to filter out the patrol speed because in that case, the patrol speed will be higher in frequency than the relative closing speed of the target even if the absolute speed of the target is moving faster than the patrol car.

The strength of the harmonic at **506** depends upon the signal power of the patrol speed point at **502**. If the target return at **504** were lower in power, the harmonic at **506** could easily be mistaken for a real target. Therefore, to minimize this possibility, the DSP and its control software calculate the absolute power of the patrol speed point at **502**, and determine if it is high enough to indicate that harmonics will be present in the FFT spectrum. If it is high enough, then the DSP lowers the sensitivity of the radar to returns in the frequency ranges around the frequency of the second and third harmonics by applying more stringent signal to noise ratio criteria to peaks at these harmonic frequencies than are applied to normal target peaks at other frequencies.

The DSP calculates the target speed and outputs a stream of digital numbers on bus **444** which define amplitude points on a periodic waveform which has a frequency that is related to the doppler shift between the outgoing radar energy and the returned, doppler shifted energy from a target. This stream of digital numbers is converted to an analog waveform by digital-to-analog converter **446** which outputs an analog signal on line **448**. The analog signal is amplified by amplifier **450** and applied to a speaker **452** for audio feedback to the police officer operating the radar.

To insure that radio frequency interference does not render the measured target speed inaccurate, another RFI detector **461** is employed in the counter/display unit **12**. This RFI detector is the same structure as the RFI detector in the antennas and serves the same purpose. When radio frequency interference is detected which is of a sufficiently high level to interfere with the accuracy of speed calculation by the DSP, the RFI detector outputs a signal on line **454** which causes the DSP to take appropriate action to avoid displaying any possible invalid target speed. In some embodiments, that action may be to blank the target display and in other embodiments, the display may be lit with a code in the target speed windows indicating the target speed will not be displayed or an icon may be lit which indicates any displayed target speed may be invalid.

In some embodiments, the radar system may be connected to auxiliary devices such as a computer etc. To implement such coupling, an RS232 interface **456** couples a DSP serial data port to auxiliary devices via serial data lines **460** and **462**. Such auxiliary devices may include a large roadside electronic sign that displays vehicle speed to passing drivers, computers or video systems that take pictures of the passing targets with radar data as to their speed.

To insure the integrity of the target speed calculation, the vehicle battery voltage is monitored and the internal temperature of the counting/display unit **12** is also monitored. Sometimes police officers sit in their patrol cars for long periods of time with the engine off clocking speeders. This can run the vehicle battery down to a voltage level where reliable operation cannot be assured. The DSP monitors the vehicle battery voltage using a 2 channel A/D converter having an analog input coupled to the vehicle battery via line **466**. The battery voltage is converted to a digital number which can be read by the A/D converter **464** via bus **466**. When the battery voltage gets too low for reliable operation, the DSP detects this fact in one of the periodic reads of the data from the A/D converter **464** and shuts its operation down. Also, the cabin area of patrol cars and the contents thereof can become very hot when left sitting in the sun for long periods of time. These high temperatures can cause thermal runaway of solid state devices or sufficiently alter the operation of solid state devices as to render the results suspect. Therefore, the internal temperature of the counter/display unit **12** is monitored by a temperature transducer coupled to the DSP via analog signal line **468**. The A/D converter **464** converts this temperature to a digital number which is periodically read by the DSP via bus **466**. When the internal temperature in the patrol car gets too high, the DSP shuts its operations down. With the unit operating in the summertime on the black dashboard of a patrol car, temperatures can reach 100 degrees centigrade. The components in the system are rated for 85 degrees centigrade, so when temperatures climb above 90 degrees centigrade, operations cease in the DSP and it enters a low power sleep mode and the antenna circuitry is turned off. Once the DSP enters the sleep mode, it wakes up periodically and reads the temperature data from the A/D converter **464**. As soon as the temperature drops below the safe limit, operations resume.

The DSP is controlled by way of an infrared remote control much like the remote control used by many modern television sets. Infrared signals from this remote control (not shown) are received by infrared receiver **470** and converted to digital commands on bus **472**. These digital commands control the mode of operation of the overall system etc. In alternative embodiments, a keyboard **474** on the front panel of the counter/display unit **12** may be used to enter commands to control operation of the system.

Referring to FIG. **19**, the Boolean equations for gate array logic **418** are shown. The various signals that are combined by the Boolean equations are listed at **480** and **482**. These signals are input and output signals from the DSP chip on FIG. **20A**. FIGS. **20A1** and **20A2**. FIGS. **20A1** and **20A2** and **2081** and **2082** are the schematic diagram of the digital logic of the counter/display unit **12** shown in FIG. **18**. These signals at **480** and **482** of FIG. **19** appear on the pin numbers listed at **484** and **486**. These pin numbers correspond to the pin numbers of the integrated circuit **418** on FIGS. **20B1** and **20B2**. Reference numbers of various logic elements on FIGS. **20A1** and **20A2** and **20B1** and **20B2** that are identical to reference numbers on FIG. **18** indicate the integrated circuits that correspond to identically numbered functional blocks on FIG. **18**. FIGS. **21A1** and **21A2** and **21B** are a schematic diagram of the analog circuitry in the counter/display unit. Circuit elements with reference numbers identical to functional blocks in FIG. **18** are the circuit elements that perform the functions of the identically numbered blocks in FIG. **18**.

Referring to FIGS. **20A1** and **20A2** and **2081** and **2082**, the two 74HC132 integrated circuits enclosed within dashed box **421** serve as a power-on reset circuit. Manual control data to control the mode of operation of the counter display unit and other aspects of the operation can be entered through the infrared receiver **470** or keyboard **474** in FIG. **18**. An "OR tie" circuit **475** in FIGS. **20b1** and **20b2** allows

the user input commands to be entered either through the keyboard **474**, a wire remote plug on the rear panel of the unit or the built-in infrared receiver **470**. The digital-to-analog converter **446** of FIG. **18** is implemented, with integrated circuit **447**. Buffer amplifier **450** in FIG. **18** is implemented in FIGS. **20B1** and **20B2** using differential amplifier **451**. The 32 KHz clock **426** in FIG. **18** is implemented using 640 KHz crystal **427** and an integrated circuit divider **429** in FIGS. **20A1** and **20A2**. The temperature and battery voltage monitoring function of block **464** in FIG. **18** is carried out by 2 channel A/D converter chip **465** and its associated interface circuitry connecting battery voltage line **466** and temperature transducer line **468** thereto. Radio interference detector **461** in FIG. **18** is implemented by differential amplifier **453** in FIGS. **20A1** and **20A2** and its associated RF tuned circuit **455** coupling antenna **457** to the amplifier. The structure and operation of the RFI detector are substantially identical with the RFI detector in the antenna circuitry previously described. Line **459** couples the DSP **400** to a manually operated switch, not shown, which is used to control a setup mode. RAM **428** and EPROM **402** are found in the upper right hand corner of FIGS. **20B1** and **20B2**.

Referring to FIGS. **21A1** and **21A2** and **21B**, two line receivers with hysteresis **405** and **407** receive the XMIT DATA and SERIAL CLOCK serial data streams from the front antenna. These two integrated circuits combine with line driver **409** to make up the antenna **1** driver and receiver block **406** in FIG. **18**. Line driver **409** transmits the serial data of the RECEIVE DATA signal in FIG. **13B** to the antenna **1** circuitry via bus **16** in FIG. **1**. The line drivers **411** and **413** receives the serial data streams of XMIT DATA and SERIAL CLOCK from antenna **2**. Line driver **415** transmits the serial data stream of the RECEIVE DATA signal to antenna **2** via bus **18** in FIG. **1**.

Line drivers **405**, **407**, **409**, **411**, **413** and **415** all serve to buffer and condition the serial data transmitted bi-directionally between the antennas and the counter/display unit so that the data can be transmitted approximately 25 feet or more. The line drivers **405**, **407**, **409**, **411**, **413** and **415** all use hysteresis to maximize the noise immunity of the system and to prevent "uncertainty" noise generated by the system caused by slow logic transition across the logic level comparison threshold.

The watchdog timer **430** in FIG. **18** is implemented in FIGS. **21A1** and **21A2** and FIG. **21B** with integrated, circuits **431**, **433** and transistors **435** and **437**. The circuitry inside box **439** in FIGS. **21A1** and **21A2** is a manual power on/off circuit. A switch on the front panel (not shown) is coupled to the base of transistor Q1 such that when the switch is actuated, the transistor collector clocks the clock input of the flip-flop **441** thereby causing the flip-flop to toggle. The Q output of this flip-flop generates a shut down signal S.D. that is coupled by line **443** to the base of transistor Q2. This transistor controls the operation of a power supply integrated circuit **441** on FIG. **21B**.

Integrated circuit **441** in FIG. **21B** is a switch mode power supply that allows transformer **443** to create several different DC power supply voltages from the 12 volt DC car battery.

The speedometer interface **424** in FIG. **18** is implemented in FIG. **20B** with differential amplifiers **425** and **427**.

The RS232 interface **456** in FIG. **18** is implemented with an integrated circuit **457** in FIG. **21B**.

The gain adjustment number in the control software is used for several beneficial effects. First, as mentioned above, the gain adjustment number can be used to calculated the true power of the patrol speed. The true power of the return thought to be the patrol speed can then be used to make a more informed choice as to which of the returns in a multiple return or apparent return spectrum is the correct patrol speed. Further, more accurate selection of the patrol speed return using the gain correction number aids greatly in better harmonic suppression as described above and also aids in configuring an elliptical filter response curve with a zero located over the patrol speed to filter out this return before doing target processing.

In the preferred embodiment, the system also looks for the fastest target speed and use of the gain adjustment number to more accurately identify the patrol speed helps suppress the intermodulation product which might otherwise be mistaken as the fastest target speed but which is really an anomaly. Specifically, the intermodulation product that results from the upper sideband, i.e., the sum of the transmit frequency and the doppler shifted signal at the frequency dictated by the relative closing speed can be mistaken as a real target return (shown in FIG. **25** at peak **510**) and displayed as the fastest speed unless steps are taken to suppress it. An example will help to clarify this concept. Suppose the patrol speed has been processed by selection of the strongest signal and use of the gain adjustment number to calculate the true power results in a determination that the patrol speed is 55. Suppose also that there is a target moving at 65 mph in the opposite lane so that the doppler shifted return shows a closing velocity of 120 mph. The intermodulation product will be the sum of 120 and 55 or 175 mph. Thus, the intermodulation product results in false return showing an apparent speed of 175 mph closing velocity minus patrol speed of 55 mph or 120 mph. This intermodulation product, unless suppressed or filtered out, will then cause the system to display 120 mph as the fastest target erroneously.

The DSP and its control software drives the displays so as to simultaneously display both the strongest target signal and the fastest target signal. In the prior art, some units will display the fastest target speed but only when a switch is held down. The problem with this arrangement is that while the switch is being held down, no tracking history of the strongest target return is being accumulated. The courts generally like to have tracking history evidence for conviction, so the prior art arrangement is disadvantageous in that respect. The traffic surveillance radar according to the teachings of the invention eliminates this disadvantage by simultaneously displaying the strongest target return (the one with the best signal-to-noise ratio) in the left display window and the fastest target return in the right display window. When the fastest target return becomes the strongest return, it is automatically displayed in the left display window, and the patrolman can push a switch to lock onto the target return displayed in the left window for purposes of citation. The system does all this by doing the following things in the following order in one embodiment: performing the overlapping FFT's and eliminating the immediate neighbors of each return before averaging the apparent power of eight neighboring bins of a return, four on either side thereof so as to determine the signal-to-noise ratio of each return; using the gain adjustment number to determine the true power for purposes of determining the patrol speed and then filtering out the patrol speed return using a digitally simulated elliptical filter with a zero on the patrol speed; suppressing harmonics of the patrol speed; suppressing intermodulation products to eliminate the apparent fastest target caused by the upper sideband in the product signal from the mixer diodes; selecting the target return with the best signal-to-noise ratio as the strongest target return and

calculating and displaying the speed of that strongest target return in the left window; calculating the speed of each remaining target return and selecting the target return with the highest speed for simultaneous display in the right window. In the preferred embodiment, the fastest target speed is not displayed in the right window if it is the same as the strongest target speed. In other embodiments, the fastest target speed is simultaneously displayed in the right window even if it is the same target return as the strongest signal displayed in the left window. In some embodiments, only a single display window is used and the fastest target speed is always displayed in that window. In the preferred embodiment, three display windows are used, and the patrol speed is displayed in the rightmost window, the strongest target speed is displayed in the leftmost window and the fastest target speed is selectively displayed in the middle window.

Referring to FIGS. **23A–23E**, there is shown a flow chart for the fast target processing in either moving mode or stationary mode. In the preferred embodiment, the patrolman indicates to the radar unit when the radar is being operated with the patrol car not moving to avoid the difficulty of searching for patrol car speed when the Doppler shift of reflected signals from stationary objects is zero. Zero Doppler shift causes problems in processing by the DSP. Fastest target processing allows the operator to "look past" the strongest target (usually the closest vehicle) and measure and display speeds of more distant vehicles which are approaching at a faster speed than the strongest target. Intermodulation effects can produce spectral signals which can be falsely interpreted as weak "faster" targets. In order to determine if a target is a true faster target, the received data is operated on by a 512 point FFT, which results in a 256 point spectral analysis. The spectral strength and spectral bin number of the five strongest spectral lines are used to determine if the potential target bin number is a multiple of one of these lines or if its spectral bin number is nearly the same as the sum of any two of the five lines or nearly the same as the absolute difference of any two of the five lines (see FASTQUAL subroutine flow chart below).

The strength of a target multiple is related to the strength of its fundamental, while the strength of a sum or difference intermodulation product is related to a product function of the strength of its two components. Target multiples are evaluated for second and third harmonic possibilities each, with a potential for 10 harmonic frequencies to be considered. The sum and difference permutation generates 20 frequencies. A target multiple must have a fundamental absolute signal strength above a certain threshold to be considered as a possible false fast target. Similarly a potential intermodulation false target must have both components with an absolute signal strength above a certain second threshold to be ruled as a false target. These thresholds were determined experimentally as radar receivers vary from unit to unit in intermodulation characteristics.

As an example, in the moving radar spectral diagram of FIG. **28**, signals A,B,C, E &F represent real targets of interest. Signal A is a Patrol Speed signal from a nearby stationary target. Signal C is the strongest moving target while B is a slower, weaker target and would not generate a displayed speed. In the example of FIG. **28**, only signals A, B & C have enough signal strength to generate false spectral lines by harmonic distortion and intermodulation products and multiple bounce returns. Line D is a 2*A harmonic (2 times multiple bounce signal generated by signal A) possibility and would not be processed. E and F represent faster targets with F being fastest. Line G can be generated by intermodulation between A & B. Lines H & I are similarly potentially due to intermodulation and line J could be a 2*C harmonic and would not be processed.

The details of this fastest signal processing will now be discussed in greater detail. In FIG. **23A**, block **600** represents the process of setting the newline flag. This is done to setup the flag so that it can be cleared under certain circumstances later in the process. Test **602** determines whether the unit is operating in moving mode. The patrolman tells the unit which mode to operate in, but the mode can be changed from moving to stationary or vice versa at any time. If the unit is in moving mode, steps **604**, **606** and **608** are performed to find the 5 strongest signal returns and save them in a buffer so that they are available after the high pass filtering is done later in the process. This is done because the patrol speed return and possibly intermodulation products and harmonic multiples of the patrol speed may be in this group of the 5 strongest returns and it is necessary to retain knowledge of these 5 signals because their harmonics may still be present in the spectrum after the high pass elliptical filtering process is performed. Step **604** represents the process of performing a single **512** point FFT on the first **512** samples in the sample buffer. The sample data is stored in a circular buffer which is large enough to store two 2048 blocks of samples. The two blocks are processed in a pseudo-ping-pong fashion in the sense that when the first 2048 block is filled, the FFT processing starts, while an interrupt routine is busy filling the next 2048 block. Whenever a frame is received from the antenna, the interrupt service routine interrupts main loop processing and stores the freshly received frame in the second 2048 block.

Step **606** is a subroutine call to the patrol speed processing routine which functions to find the best patrol speed candidate and tracks it after locking. The patrol speed processing routine was performed in the Stalker prior art and will not be described further herein. The structure and processing of the Stalker prior art is hereby incorporated by reference. Step **604** generates 256 spectral lines or bins. The first 88 of these spectral lines represent speeds up to about 70 mph which usually contains the patrol speed.

Referring to FIG. **26**, there is shown a high level flow chart of the patrol speed processing. The process shown in FIG. **26** is called and performed about every 40 milliseconds. The first thing that is done is the test represented by block **599** to determine if the RF quality is acceptable. If insufficient time has elapsed from the time the transmitter is turned on to allow the RF returns to stabilize before the routine of FIG. **26** is called, the test of block **599** will return processing to the main loop without performing the patrol speed processing. Next, a determination of whether the radar is in track mode or search mode as represented by block **601** is performed. If the unit is in search mode, the test of block **603** is performed to determine if the unit is in hold mode. Hold mode is a mode that turns off the transmitter for evasion of radar detectors. When in hold mode, patrol speed cannot be tracked. If the unit is in hold mode, and the patrolman enters a command to exit hold mode, step **605** is performed to clear the hold mode and attempt to begin tracking the patrol speed again. The radar unit assumes initially that the patrol speed is the same as it was when hold mode was entered. This is attempted once, and a tracking window is setup around the spectral line which was the last tracked patrol speed, and the lower tracking signal strength criteria is used (discussed further below). If no spectral line of the current spectrum within the window matches this patrol speed, the unit will not go into track mode and search mode will be continued to find the new patrol speed.

If the unit was not in hold mode when step **603** was performed, test **607** is made to determine if the patrolman has pushed the "reject displayed patrol speed" button (which sets a patrol speed reject flag and records the spectral line number of the spectral line which represents the rejected patrol speed). If the answer is yes, the processing of block **609** is performed to determine if a 5 second timer that was started when the patrolman pushed the reject button has elapsed. If 5 seconds have elapsed, the patrol speed reject flag is cleared as represented by block **611**. If 5 seconds has not elapsed, then a special patrol speed processing process is performed represented by block **613** to find a new patrol speed candidate. The process represented by block **613** excludes spectral lines within ±5 spectral lines from the previously tracked patrol speed spectral line number recorded when the patrolman pushed the reject button. Then, a standard search for a new patrol speed candidate is made excluding the 11 rejected spectral lines. The process of block **613** returns a pointer to a spectral line for a new patrol speed candidate. If the branch from **609** to block **611** is taken, the search processing of block **619** is performed to find a new patrol speed candidate. This processing is similar to processing of block **613** except that there is no rejection of the previous patrol speed spectral line and its 5 nearest neighbors on each side. After the new patrol speed candidate spectral line is selected by either the process of block **613** or **619**, the processing of block **615** is performed to calculate the true power of the signal return represented by the new patrol speed candidate spectral line using the gain adjustment number that was sent to the preamplifier in the antenna when the samples were generated from which the new patrol speed candidate was selected. After this process is completed, the test of block **617** is performed to determine if a patrol speed has been successfully acquired, i.e., meeting minimum acquisition signal strength criteria. This is done by testing the spectral line pointed to by the routine of either block **613** or **619** to determine if the patrol speed candidate signal has the minimum required signal strength. This minimum required signal strength may be determined experimentally and depends upon the type and polarization of the antenna (because stationary objects react differently in terms of radar cross-section to circular, horizontal or vertical polarization of the transmitted signal) and the power of the transmitter and the conversion efficiency of the receiver section. Since many different options exist for these components that fall within the scope of the claims, no attempt will be made here to recite a minimum acceptable signal power since it can be different for each different embodiment.

If the processing of test **617** indicates a new patrol speed has been successfully acquired, then the processing of block **621** is performed to set the patrol speed tracking flag for purposes of controlling branching by test **601**. The processing of block **621** also sets a digital Chebychev bandpass filter with a center frequency centered at the spectral line declared as the new patrol speed and with a 3 db bandwidth wide enough to encompass about ±1.2 spectral lines, then all 2048 real time digital samples are passed through the digital bandpass filter and stores the resulting set of digital samples in a temporary buffer. The resulting set of digital samples defines an approximate sine wave having the frequency of the new patrol speed candidate. The processing of block **621** then calls another routine to measure the frequency of the signal defined by the filter output samples by finding the zero crossings and measuring the time interval between the zero crossings by counting samples and calculating the frequency from this data. Then the patrol speed is calculated from this frequency using the relationship that Doppler shift results in a frequency shift of about 103 Hertz per mile per hour. Then the processing of block **621** updates the patrol speed display with the appropriate speed measure (mph or km/hr).

Next, the processing of block **623** is performed to save the spectral line representing the new patrol speed in case the patrolman rejects the new patrol speed and as an input to the tracking process.

Returning to blocks **605**, if the hold mode has been ceased by the patrolman and the transmitter has been turned back on and the processing of block **605** clears the hold flag for a single attempt to track at the previously recorded patrol speed. Likewise, if the test of block **601** indicates that the unit is in track mode, processing vectors to the processing of block **625**. The processing of block **625** is patrol speed tracking logic where a tracking window is set up around the spectral line last tracked as the patrol speed and examines the current spectrum resulting from the FFT of samples generated since the transmitter was turned back on and looks for the strongest signal in the tracking window. A true patrol speed signal will be smeared in energy on the low side because of cosine error resulting from an apparent slow down of the object because of the changing geometry of the relationship between the antenna and the stationary object as the patrol car passes it. However, the energy of a true patrol speed signal will fall rapidly to the noise on the high side. Therefore, to help determine if the strongest signal in the tracking window is really a patrol speed return, a signal-to-noise ratio will be calculated for the new candidate for the signal strength at its peak compared to the signal strength of third and fourth higher frequency spectral lines after skipping the first and second higher frequency spectral lines. The third higher spectal line must be at least 6 db down and the fourth spectral line must be at least 9 db down for the signal to accepted as the new patrol speed.

If the selected signal meets these requirements, then the test **627** is performed to determine if the signal true power of the selected signal is high enough to qualify as a patrol speed. The minimum acceptable signal power is lower than the criteria applied for original acquisition in search mode, but must be experimentally determined for the particular embodiment. If the signal power is adequate, then the processing of block **623** is performed as previously discussed and a tracking timer is initialized to begin counting up from a negative number to zero as symbolized by block **629**.

If test **627** indicates signal strength is not adequate, then test **631** is performed to determine whether the tracking timer has expired. It will have already expired if the test of **631** is reached from an exit from hold mode. If the test of **631** is reached from the track mode branch out of test **601**, the tracking timer may not have expired, and the test **631** will branch appropriately. If it is expired, the process of block **633** is performed to clear the patrol speed tracking flag, and the process of block **635** is performed to blank the patrol speed display (in the preferred embodiment, brackets with nothing between them are displayed by the process of block **635**).

To further explain the processing that occurs in carrying out user inputs such as the request to reject an incorrect displayed patrol speed, please refer to FIG. **27**. FIG. **27** is a portion of a subroutine that is periodically called from the main loop to process operator key inputs. In the preferred embodiment, the user can enter inputs to the unit from either an infrared remote control or from buttons on the front panel. The buttons on the front panel are hardwired to an infrared controller chip and only bypass the infrared radia-

tion path. The infrared controller chip issues a serial stream of characters that corresponds uniquely to the command received either from the front panel or the infrared controller in RC-5 bi-phase code with a bit interval of 1.68 msec. The interrupt service routine carried out every 100 microseconds by the DSP to sample the state of the HEN input on FIGS. **20A1** and **20A2** compresses the bi-phase bit stream by counting the number of sample times between each change of states of the HEN input to build a buffer of data. The KEYCHECK subroutine examines this buffer of data to analyze the pattern of transitions between logic 1 and logic 0 to determine if the intervals between transitions are acceptable and when a valid start of command pattern is received and if a command of some kind has been received. KEYCHECK returns a flag that a key has been pressed. All of that processing is represented by block **637**.

Next, test **639** is performed to determine if a new key has been pressed so as to distinguish between commands that are continually issued by the infrared controllers until the key pressed is released by the patrolman. If not, processing returns to the main loop. If so, processing, jumps to the key jump table represented by block **641**. The purpose of this table is to determine what action to take for the key that has been pressed. For purposes of this disclosure, the only relevant key command is the patrol blank command which represents the message from the patrolman that the currently displayed patrol speed is an incorrect patrol speed and instructing the unit to not display this speed again and to search for a new candidate for patrol speed. If, after 5 seconds, no new candidate for patrol speed can be found, the unit will re-display the rejected patrol speed.

If the patrol blank command is received, the processing of block **643** to initiate a keyboard beep, then test **645** is performed to determine if the radar is in moving mode. If in moving mode, test **647** is performed to determine if the patrolman has locked the target and patrol speed on the display. The blanking key has a dual function. One function is to reject an incorrect patrol speed, but the other function is to blank the patrol speed if it has been locked so that perpetrator cannot see the patrol speed during the ticketing process. If the target and patrol speed have been locked by the operator, then test **649** determines whether the patrol speed has been blanked. If so, the process of **651** recovers the locked patrol speed and unblanks the display to display it. If the patrol speed has not been blanked, process **653** saves the locked patrol speed number and blanks the patrol speed display.

If test **647** determines that the target and patrol speed have not been locked, test **655** is performed to determine if the unit is in patrol speed tracking mode. If not, processing returns to the main loop. If so, the process of block **657** is performed to clear the patrol speed tracking flag, clear the patrol speed hold flag, set the patrol speed reject flag, initialize the patrol speed rejection timer, set audio loudness to zero and blank the target, lock and patrol speed displays. In the preferred embodiment, three display windows exist on the front panel. The leftmost window displays the target speed. The middle window displays any target speed that the patrolman indicates he or she wants to lock or freeze at some value. The right window displays the current patrol speed or the patrol speed at the time of the lock. When the unit is placed in fastest mode, the lock window is used to display the fastest target speed as long as a target speed has not been locked therein.

Returning to the consideration of FIG. **23A**, step **608** saves the spectral bin number and true power of the 5 strongest signals (a signal is defined as a strongest spectral line and its immediately adjacent neighboring spectral lines on either side thereof) found in the first **88** spectral lines from the first FFT results.

Some code that is not relevant to the claimed invention is executed next, and then the test **610** is reached, Test **610** determines if the radar is in moving mode. In moving mode, there will be a patrol speed return that interferes with target speed processing. Therefore, if in moving mode, the processing of block **612** is performed to filter out the patrol speed return by setting up a digital high pass 5th order elliptical filter with a zero set at the frequency of the patrol speed. Then all 2048 samples from the current block being processed are passed through the filter to generate a new block of 2048 filtered samples which are stored in a temporary buffer. Then the processing of block **614** is performed to do 5 overlapping **512** point FFT's on the filtered samples. At the end of each of these 5 overlapping FFTs, the starling address pointer for the next FFT is advanced 384 samples. Each FFT results in 256 spectral powers (sum of the squares of the real and imaginary vectors in each bin). The spectral powers of all 5 FFT's are added together to yield a 256 longword spectral array (48 bits per longword).

If the unit is in stationary mode, the processing of block **616** is performed to calculate 7 overlapping FFT's, each of which overlaps by 256 samples. No high pass filtering is needed, because in stationary mode, no patrol speed return is present to interfere with target processing.

After the processing of blocks **616** or **614** are completed, block **618** calls the subroutine SIGQUAL which functions to perform a prior art routine to locate the strongest signal which meets an acceptance criteria and suppresses target signals which are close to an integer multiple of the patrol speed by processing them at a lower sensitivity. The routine returns a spectral line number and a signal-to-noise flag. The strongest signal is picked on the basis of strongest relative apparent power. The signal-to-noise ratio is calculated by adding the apparent powers of 30 neighboring spectral lines excluding the candidate line and its two immediately adjacent spectral lines. The apparent powers of the 61 neighbors (roughly 32 spectral lines on either side of the candidate line) are added up and then a right shift of 5 places is performed to divide by a factor of 32 to derive a noise value. The noise value result is then compared to the apparent power of the candidate line to calculate the signal-to-ratio and the signal-to-noise ratio is then compared to a criteria to determine if the candidate spectral line can be used as a legitimate target speed. The minimum acceptable signal-to-noise ratio, in the preferred embodiment, is subject to operator input (in the preferred embodiment, the operator can select between 4 sensitivity values). There is a factory setting for maximum sensitivity. The patrolman can reduce this maximum sensitivity in four steps. There is also a local noise maximum criteria which must be satisfied. If there is another strong signal in the vicinity of the candidate strongest signal, no target speed will be displayed if the local noise maximum apparent power exceeds the local maximum noise power criteria. The neighborhood in which this local noise maximum must appear is restricted to a frequency range within ±5 spectral lines on both the high and low frequency sides of the candidate spectral line excluding the candidate spectral line and its two immediately adjacent neighbors. Because there can be ambiguity in the target speed display where there is another strong signal of almost the same signal strength as the candidate signal in the immediate vicinity of the candidate signal, no target speed is displayed in this circumstance to avoid an error in citing the wrong driver.

The sensitivity value selected by the patrolman is used as an index into tables of signal-to-noise ratios and local-noise-maximum-to-signal-maximum power. The apparent power of the target and the sensitivity value are used to pick two entries out of these tables, and the selected entries are compared to the signal-to-noise value and the local-noise-maximum-to-signal-maximum value calculated from the neighborhood of the candidate signal. If the calculated signal-to-noise ratio and the local-noise-maximum ratios exceed the selected table entries, then the QSNFLAG is cleared indicating the spectral line returned (STRONGLINE) is a valid strongest signal.

The SIGQUAL routine also performs a process of examining apparent targets which have speeds of an integer multiple of the patrol speed to determine if they are real targets. Certain stationary objects like signs that a patrol car passes may cause multiple bounce radar returns that look like targets travelling at an integer multiple of the patrol car speed. Because these returns tend to be momentary, once the candidate strongest target signal has been selected, a special section of code is executed to make sure the strongest target signal is not a "ghost" signal caused by a double bounce from a highly reflective object by determining how long the signal has been present and looking at the patrol speed true power and determining if the patrol speed true power is great enough to cause a double bounce detection. In a moving radar system, a common problem that occurs with high radar sensitivity is called "ghosting" which results in a false target reading the same as patrol speed or in some cases, twice patrol speed. These readings are caused both by intermodulation effects and by actual radar multiple bounces between the patrol vehicle and some highly reflective stationary target. Prior art radars such as the Stalker dealt with this problem by de-sensitizing the radar for target speeds that are multiples of patrol speeds. This has the effect of greatly shortening the range on targets in these speed ranges, sometimes unnecessarily. If the patrol speed signal strength is moderate to weak, distortion harmonics will not be detectable and in the case of multiple bounce signals, the path length on a patrol speed double bounce signal will be twice that of the patrol speed signal, causing the double bounce signal strength to usually be below the normal detection threshold. The target processing for both strongest and fastest target signals in the preferred embodiment has special sections for dealing with targets that may be multiples of patrol speed. A table-driven variable threshold based on patrol speed absolute signal strength (true power) is used to set the detection threshold on targets that are possible multiples, thereby allowing increased range on such targets when the patrol speed signal is not strong.

Next, test **620** determines if the STRONGLINE spectral line number is within ±1 spectral line of the STRONGLINE spectral line returned the last time through this portion of the main loop. If so, then the STRONGLINE spectral line is deemed to designate a valid strongest target signal, and the process of block **622** clears a NEWLINE flag which was set in block **600** indicating that is not a new signal and has been seen at least once before. If STRONGLINE spectral line is not within ±1 spectral line of the STRONGLINE spectral line returned the last time through this portion of the main loop, then the NEWLINE flag is not cleared. Next, the processing of block **624** is performed to save the STRONGLINE spectral line as the OLD STRONGLINE and then the process of block **626** is performed to save the STRONGLINE spectral line number, the NEWLINE flag and the QSNFLAG in a circular history queue and will advance the queue pointer by one. The circular history queue is used to determine if the strongest target speed is decelerating. The reason it is desirable to determine if the strongest target speed is decelerating is because a phenomenon exists which can generate false fastest targets when the strongest target speed is apparently rapidly decreasing and the amplitude of the signal is rapidly decreasing also so as to form a chirp. This happens most frequently when the strongest target passes the patrol car in the opposite lane. Because this car is falling off the beam, just as the car passes the radar, its apparent speed decreases because of cosine effect and the amplitude rapidly falls off because the car is passing out of the radar beam. The FFT spectrum of a chirp signal like this is a peak signal with scallops that looks similar to a sin x/x function. The highest frequency scallop can be mistaken as a false fastest target and must be suppressed. In such a case, no fastest target speed is displayed. The processing to perform this analysis will be discussed below.

Next, an OPLFAST subroutine is called, as symbolized by block **628**, to look for faster but weaker target than the strongest target signal for purposes of implementing the "fastest" mode of operation where the fastest target speed is displayed in the lock window. A flow chart for the OPLFAST subroutine is disclosed in FIGS. **24A–24D**. Generally, the OPLFAST routine does a top down search for up to 7 potential fastest targets that are stronger than 24 db down from the strongest target signal and then does some special processing on these candidates.

Referring to FIG. **24A**, block **701** retrieves the previously saved true power of the strongest target signal (STRONGLINE), which has been previously reduced in true power by 24 db in the preceding pass through OPLFAST and then multiplies it by 0.75. The reason this is done is to act as an amplitude filter to prevent the amplitude of the saved strongest target signal from dropping more than 75% on each pass because this modified signal strength is used as a qualification criteria for the candidates for fastest target and it is undesirable to allow this signal to momentarily drop out thereby causing false fastest targets to appear. Next, block **703** is performed to retrieve the variable STRONG STRENGTH which is the true power of the current strongest target signal. This is done by using STRONGLINE as an index pointer into a spectral buffer that stores the 48 bit longwords. The retrieved variable STRONGSTRENGTH is reduced by 24 db by a right shift of 8 bit positions in block **705**. Then test **707** is performed to determine if the new signal strength (of STRONGSTRENGTH) is greater than 75% of STRONGSTRENGTH. If it is, then a variable TARGETSTRENGTH is set equal to STRONGSTRENGTH in block **709**. If it is not, then TARGETSTRENGTH is reduced by 75% of old TARGETSTRENGTH in block **711**.

Next a list of 7 indices in a table of four variables (see FIG. **24E**) is cleared to make room for 7 new potential fastest targets in block **713**. To start the top down search, the apparent powers of the spectral lines in the highest frequency **64** bins in the longword buffer (each longword represents one spectral line or bin) are summed by block **715**. The test **717** determines whether a STRONGLINE spectal line has been qualified, because fastest processing will not be carried out without a valid STRONGLINE spectal line identified. If STRONGLINE is equal to zero, the fastest processing of the OPLFAST routine is disable by bypassing it by taking path **719**.

Next, test **721** determines if the value of STRONGLINE is greater than 240 which represents a closure speed for the strongest target of about 200 MPH which renders fastest processing academic since somebody faster is unlikely.

tion path. The infrared controller chip issues a serial stream of characters that corresponds uniquely to the command received either from the front panel or the infrared controller in RC-5 bi-phase code with a bit interval of 1.68 msec. The interrupt service routine carried out every 100 microseconds by the DSP to sample the state of the HEN input on FIGS. **20A1** and **20A2** compresses the bi-phase bit stream by counting the number of sample times between each change of states of the HEN input to build a buffer of data. The KEYCHECK subroutine examines this buffer of data to analyze the pattern of transitions between logic 1 and logic 0 to determine if the intervals between transitions are acceptable and when a valid start of command pattern is received and if a command of some kind has been received. KEYCHECK returns a flag that a key has been pressed. All of that processing is represented by block **637**.

Next, test **639** is performed to determine if a new key has been pressed so as to distinguish between commands that are continually issued by the infrared controllers until the key pressed is released by the patrolman. If not, processing returns to the main loop. If so, processing, jumps to the key jump table represented by block **641**. The purpose of this table is to determine what action to take for the key that has been pressed. For purposes of this disclosure, the only relevant key command is the patrol blank command which represents the message from the patrolman that the currently displayed patrol speed is an incorrect patrol speed and instructing the unit to not display this speed again and to search for a new candidate for patrol speed. If, after 5 seconds, no new candidate for patrol speed can be found, the unit will re-display the rejected patrol speed.

If the patrol blank command is received, the processing of block **643** to initiate a keyboard beep, then test **645** is performed to determine if the radar is in moving mode. If in moving mode, test **647** is performed to determine if the patrolman has locked the target and patrol speed on the display. The blanking key has a dual function. One function is to reject an incorrect patrol speed, but the other function is to blank the patrol speed if it has been locked so that perpetrator cannot see the patrol speed during the ticketing process. If the target and patrol speed have been locked by the operator, then test **649** determines whether the patrol speed has been blanked. If so, the process of **651** recovers the locked patrol speed and unblanks the display to display it. If the patrol speed has not been blanked, process **653** saves the locked patrol speed number and blanks the patrol speed display.

If test **647** determines that the target and patrol speed have not been locked, test **655** is performed to determine if the unit is in patrol speed tracking mode. If not, processing returns to the main loop. If so, the process of block **657** is performed to clear the patrol speed tracking flag, clear the patrol speed hold flag, set the patrol speed reject flag, initialize the patrol speed rejection timer, set audio loudness to zero and blank the target, lock and patrol speed displays. In the preferred embodiment, three display windows exist on the front panel. The leftmost window displays the target speed. The middle window displays any target speed that the patrolman indicates he or she wants to lock or freeze at some value. The right window displays the current patrol speed or the patrol speed at the time of the lock. When the unit is placed in fastest mode, the lock window is used to display the fastest target speed as long as a target speed has not been locked therein.

Returning to the consideration of FIG. **23A**, step **608** saves the spectral bin number and true power of the 5 strongest signals (a signal is defined as a strongest spectral line and its immediately adjacent neighboring spectral lines on either side thereof) found in the first **88** spectral lines from the first FFT results.

Some code that is not relevant to the claimed invention is executed next, and then the test **610** is reached, Test **610** determines if the radar is in moving mode. In moving mode, there will be a patrol speed return that interferes with target speed processing. Therefore, if in moving mode, the processing of block **612** is performed to filter out the patrol speed return by setting up a digital high pass 5th order elliptical filter with a zero set at the frequency of the patrol speed. Then all 2048 samples from the current block being processed are passed through the filter to generate a new block of 2048 filtered samples which are stored in a temporary buffer. Then the processing of block **614** is performed to do 5 overlapping **512** point FFT's on the filtered samples. At the end of each of these 5 overlapping FFTs, the starling address pointer for the next FFT is advanced 384 samples. Each FFT results in 256 spectral powers (sum of the squares of the real and imaginary vectors in each bin). The spectral powers of all 5 FFT's are added together to yield a 256 longword spectral array (48 bits per longword).

If the unit is in stationary mode, the processing of block **616** is performed to calculate 7 overlapping FFT's, each of which overlaps by 256 samples. No high pass filtering is needed, because in stationary mode, no patrol speed return is present to interfere with target processing.

After the processing of blocks **616** or **614** are completed, block **618** calls the subroutine SIGQUAL which functions to perform a prior art routine to locate the strongest signal which meets an acceptance criteria and suppresses target signals which are close to an integer multiple of the patrol speed by processing them at a lower sensitivity. The routine returns a spectral line number and a signal-to-noise flag. The strongest signal is picked on the basis of strongest relative apparent power. The signal-to-noise ratio is calculated by adding the apparent powers of 30 neighboring spectral lines excluding the candidate line and its two immediately adjacent spectral lines. The apparent powers of the 61 neighbors (roughly 32 spectral lines on either side of the candidate line) are added up and then a right shift of 5 places is performed to divide by a factor of 32 to derive a noise value. The noise value result is then compared to the apparent power of the candidate line to calculate the signal-to-ratio and the signal-to-noise ratio is then compared to a criteria to determine if the candidate spectral line can be used as a legitimate target speed. The minimum acceptable signal-to-noise ratio, in the preferred embodiment, is subject to operator input (in the preferred embodiment, the operator can select between 4 sensitivity values). There is a factory setting for maximum sensitivity. The patrolman can reduce this maximum sensitivity in four steps. There is also a local noise maximum criteria which must be satisfied. If there is another strong signal in the vicinity of the candidate strongest signal, no target speed will be displayed if the local noise maximum apparent power exceeds the local maximum noise power criteria. The neighborhood in which this local noise maximum must appear is restricted to a frequency range within ±5 spectral lines on both the high and low frequency sides of the candidate spectral line excluding the candidate spectral line and its two immediately adjacent neighbors. Because there can be ambiguity in the target speed display where there is another strong signal of almost the same signal strength as the candidate signal in the immediate vicinity of the candidate signal, no target speed is displayed in this circumstance to avoid an error in citing the wrong driver.

formed to decrement the sensitivity index to reduce the sensitivity of the radar by one click. Then path **817** is taken joining path **807** to block **819** where the stationary noise/signal ratio tables are used. Out of block **813** and **819**, paths are taken to block **821** where a pointer is set to the fastest index target entry generated by the OPLFAST routine and stored in table **771** in FIG. **24E**.

Next, the processing of block **823** retrieves two numbers from two different tables. One of these numbers is a noise/signal maximum ratio retrieved from whatever table was selected by blocks **813** and **819**. The number is retrieved from this table using the sensitivity index number created by the processing steps **801–815** as an offset to the desired table entry. The second number retrieved is a local-noise-maximum/signal strength ratio retrieved from a table stored in RAM from a fixed table stored in ROM. The number retrieved from this table is retrieved using the sensitivity index calculated by blocks **801–815** as an offset into the table.

Next, using the two ratios retrieved by block **823**, the fastest speed target entry in table **771** is tested against these ratios in a do loop. The do loop checks all fastest speed candidates until one passes the two tests or all valid candidates in table **771** are exhausted. Test **825** compares the noise/signal ratio of the current fastest candidate (the first pass through the do loop examines the fastest speed candidate in table **771**) to the maximum noise/signal ratio retrieved from the currently selected table established by blocks **813** and **819**. If the current fastest candidate's noise/signal ratio is higher than the maximum indicating a bad signal-to-noise ratio, path **827** is taken to block **829** where the pointer is advanced to the next fastest speed candidate. If the current fastest candidate's noise/signal ratio is lower than the maximum indicating a good signal-to-noise ratio, test **831** compares the local-noise-maximum/signal ratio to the ratio retrieved from the local-noise-maximum/signal ratio table stored in RAM. If the fastest candidate's ratio is greater than the retrieved table entry indicating a bad local noise condition, block **829** is executed to advance the pointer to the next candidate. If less than the retrieved table entry, the current fastest candidates passes both threshold acceptance tests and is selected as the only fastest candidate speed which has a chance of passing further processing to be described below. After the processing of block **829** is done, test **833** determines if all fastest candidates in table **771** have been tested against the two currently retrieved threshold criteria ratios by tests **825** and **831**. If not, processing returns to test **825** to test the next fastest candidate. If all fastest candidates have been processed, the subroutine returns to the main processing loop without clearing the QFASTFLAG indicating that no valid fastest candidate exists.

Assuming a fastest candidate has passed the two threshold tests **825** and **831**, path **835** is taken to test **837** with the fastest candidate selected by tests **825** and **831** designated as a preliminary fastest candidate. There, a test is performed to determine if a mobile data terminal (MDT) suppression flag has been set. This flag is set by the manufacturer of the radar unit for certain installations where the radar unit is to be mounted in a patrol car in close proximity to a cathode ray tube display used in some police car to show data from the dispatcher. The 15 KHz magnetic field from the sweep coils in the CRT can cause a false target at about 150 MPH closing speed. If this flag has been set, test **837** vectors processing to test **839** where the spectral line number of the preliminary fastest candidate is tested to determine if it falls between upper and lower MDT suppression limits. If so, the preliminary fastest candidate is rejected by returning from the subroutine without clearing the QFASTFLAG. If MDT suppression is not active or the spectral line of the preliminary fastest candidate is not between the MDT limits, test **841** is performed. This test determines whether the spectral line of the preliminary fastest candidate is a double ±1 of the spectral line of the STRONGLINE signal currently being displayed as the strongest target speed. If it is, then the subroutine returns to the main loop without clearing the QFASTFLAG indicating the preliminary fastest candidate has been rejected.

Assuming that the preliminary fastest candidate is not a double, the test **843** determines whether moving mode is active. If not in moving mode, path **847** is taken to test **849** where the spectral line number of the preliminary fastest candidate is compared to 14 to see if the fastest target is moving very slowly (spectral line number less than 14). If so, then the subroutine returns without clearing the QFASTFLAG thereby rejecting the preliminary fastest candidate. If the spectral line of the preliminary fastest candidate is higher than 14, path **851** is taken to block **853** to clear the QFASTFLAG.

If test **843** indicates moving mode is active, then test **845** is performed to determine if the spectral line number of the preliminary fastest candidate is a double of the patrol speed spectral line. The precise mathematical test performed is to determine if the spectral line number of the preliminary fastest candidate is less than the quantity 2 times the patrol speed line number plus 2 and greater than the quantity 2 times the patrol speed line number minus a variable SPREAD. SPREAD is a variable calculated each pass through the patrol speed tracking routine and is a number of spectral lines from 2 to 7 which reflects the spectrum width over time of the returns from stationary objects some of which have cosine errors while the patrol car moves past these objects. If the spectral line number of the preliminary fastest candidate is within the limits tested, then there is a possibility that the preliminary fastest candidate is a double and path **855** is taken to further processing to be described below to determine whether to display it or not. If the spectral line number of the preliminary fastest candidate is not within the limits tested in test **845**, then the preliminary fastest candidate is not a patrol speed double, and block **857** is performed. This block clears a fast target double delay timer and clears a fast target double counter. The significance of this step will be explained below.

Next, test **859** is performed to determine if the preliminary fastest candidate is a triple of the patrol speed. This test determines if the spectral line number of the preliminary fastest candidate is greater than the quantity 3 times the spectral line number of the patrol speed less SPREAD and less than the quantity 3 times the spectral line number of the patrol speed plus 3. If the answer is no, then the preliminary fastest candidate is neither a double or a triple of the patrol speed, and path **861** is taken to test **863**. This test determines if the patrol speed line number is greater than 15 because the radar is preferably desensitized if the patrol speed is very slow because low patrol speeds usually mean the patrol car is close behind other cars which leads to higher probability of multiple bounce signals creating false fastest targets. Therefore, if a low patrol speed exists, then block **865** is performed which points to the start of the low speed suppression table and sets the pointer offset to zero. The low speed suppression table is really two tables. One table stores noise/signal power ratios for low speeds, and the other table stores patrol speed signal strengths. A noise/signal ratio entry from the low speed suppression table will be used as an additional criteria to test the preliminary fastest candidate

in low patrol speed situations. This entry is selected by the processing within dashed box **867** in FIG. **29**D. Basically this process is a do loop that retrieves the actual patrol speed true power and then retrieves the lowest power entry from the patrol speed signal strength table and compares these two numbers. If the actual patrol speed true power exceeds the table entry, the table offset is incremented, and the next higher power table entry is retrieved and compared to the actual patrol speed true power. If the actual patrol speed true power is still higher than the table entry, then the do loop continues the process of incrementing the offset and retrieving a new higher power table entry until a table entry is found which exceeds the actual patrol speed true power. This particular do loop processing is used at several places within the subroutine to generate a number that is a function of the actual patrol speed true power.

When this entry is found by the process of block **867**, the processing of block **869** is performed to use the table offset that was used to find the table entry of signal power that exceeds the actual patrol speed true power as an offset into the table of noise/signal ratios for low speeds. The entry at that offset value is used by the processing of test **869** to determine if the noise/signal power ratio of the preliminary fastest speed candidate is less than the entry retrieved from the table of noise/signal ratios for low speeds. If it is less, then the preliminary fastest speed candidate passes this test, and path **871** is taken to processing that imposes additional tests. Path **871** is also taken out of test **863** if the patrol speed spectral line number is greater than 15 indicating low patrol speed qualification of the preliminary fastest speed candidate is not necessary. If the noise/signal power ratio of the preliminary fastest speed candidate is greater than the entry retrieved from the table of noise/signal ratios for low speeds, then it is not a valid fastest speed and the subroutine returns without clearing the QFASTFLAG.

At this point, if processing is on path **871**, it has been established that the preliminary fastest speed candidate is not a double or a triple of the patrol speed and, if the patrol speed spectral line is less than 15, the preliminary fastest speed candidate has passed an additional signal-to-noise requirement. Path **871** vectors processing to block **873** which is the start of a screening process to filter out the preliminary fastest speed candidate if it is likely to be an intermodulation product or a harmonic of one of the five strongest signals detected and recorded in strong signal table back at step **608** in the fast target processing section of the main loop the start of which is depicted on FIG. **23**A. The five strong signals determined in step **608** were recorded in a strong signal table in decreasing order of power. Basically, if a strong signal recorded in the strong signal table does not have a true power which exceeds a first threshold, it will not have generated any detectable harmonic distortion. Likewise, if the signal does not have a true power which exceeds a second lower threshold, then it will not have generated any detectable intermodulation products. Intermodulation products are the sum and difference frequencies of strong received signals or a strong received signal and the transmit signal.

Block **873** on FIG. **29**F starts this processing by setting up two pointers in the strong signal table. Pointer A points to the strongest signal and pointer B points to the second strongest signal of the 5 strong signals recorded. Next, test **875** is performed to determine if the true power of the signal pointed to by pointer A is greater than threshold **1**, the harmonic threshold. If not, then path **851** is taken to block **853** which clears the QFASTFLAG indicating that the preliminary fastest target speed has passed all criteria and is cleared for display. No further processing is necessary because all other strong signals are weaker than the strong signal pointed to by pointer A and will not have had the power to generate harmonics or intermodulation products (because threshold **2**, the intermodulation threshold is lower and for intermodulation to have existed, both thresholds have to have been exceeded).

Returning to test **875**, if the signal power of the strong signal pointed to by pointer A is greater than threshold **1**, then test **877** is performed to determine if the spectral line number of the preliminary fastest target signal is within ±1 of either two times or three times the spectral line number of the strong signal pointed to by pointer A. If so, then the preliminary fastest target signal is not valid, and the subroutine returns to the main loop without clearing the QFASTFLAG. If not, then test **879** determines if the strong signal pointed to by pointer A is the last entry in the strong signal table. If so, the subroutine takes path **851** to block **853** to clear the QFASTFLAG indicating a valid fastest signal has been found. If not, then test **881** determines if the signal strength of the strong signal pointed to pointer B is greater than threshold **2**. If yes, then potential intermodulation is present, and test **883** is made. This test determines if the absolute value of the difference in spectral line numbers between the signals pointed to by pointers A and B is within ±1 spectral line of the spectral line number of the preliminary fastest candidate. If that is the case, the preliminary fastest speed signal is deemed to be an intermodulation product and is rejected by returning to the main loop without clearing the QFASTFLAG. If that is not the case, then test **885** is performed to determine if the sum of the spectral line numbers of the strong signals pointed to by pointers A and B is within ±1 spectral line of the spectral line number of the preliminary fastest candidate. If that is the case, the preliminary fastest speed signal is deemed to be an intermodulation product and is rejected by returning to the main loop without clearing the QFASTFLAG. If not the case, then path **887** is taken to block **889** to increment pointer B. Path **887** is also taken out of test **881** if the signal strength of the signal pointed by the then current pointer B is not greater than threshold **2** indicating that there is not likely to be an intermodulation problem.

After block **889** is performed, test **891** determines if pointer B points beyond the end of the 5 entry strong signal table. If it is, pointer A is incremented in block **893** and pointer B is set at pointer A+1 and path **897** is taken to test **875** to determine if the signal strength of the new strong signal pointed to by pointer A is greater than threshold **1** as previously discussed. If B is not pointing beyond the end of the table, path **895** is taken to re-enter block **881** to start the intermodulation product screen process on a new set of combinations. The intermodulation product screening process essentially tests the spectral line number of the preliminary fastest speed candidate to determine if it is either the sum or difference of all combinations of the spectral line numbers of strong signals in the strong signal table which have signal powers for the signal pointed to by pointer A that exceed threshold **1** and signal powers for the signal pointed to by pointer B which exceed threshold **2**. Therefore, the do loop to move the pointers A and B will set the pointer A at a signal and, if the signal pointed by the new position for pointer A has a signal power which exceeds threshold **1**, then moves the pointer B to all signals that have signal powers that exceed threshold **2** and continues until the preliminary fastest candidate spectral line number has been checked for an intermodulation relationship against the combination of all signals in the table with powers that exceed threshold **2** against the signal pointed to by pointer A.

Referring again to test **859** on FIG. **29**C, if the preliminary fastest candidate's spectral line number is a triple of the patrol speed line number, some suppression is necessary based upon strong patrol speed signal strength. If patrol speed true signal power is weak, very little suppression is needed as the preliminary fastest candidate signal may be a real target. To that end, a process similar to the process within dashed box **867** is performed by steps **901** through **905** to return a noise/signal ratio. This process uses the same patrol speed true signal power table as the process **867** used, but uses a different table filled with suppression factors for triples (hereafter called the triple suppression table). These suppression factors are noise/signal power ratios. When an entry in the patrol speed true signal power table is found which exceeds, the true power of the patrol speed signal, the offset of this entry is used as an offset into the triple suppression table to retrieve a triple suppression factor. The process of using the offset to retrieve the triple suppression factor from the triple suppression table is carried out by block **907**. This triple suppression factor is used by test **911** to screen the preliminary fastest candidate by determining if the true noise/signal power ratio of the preliminary fastest candidate is less than the retrieved triple suppression factor. If so, then the preliminary fastest candidate is good, and path **913** joining path **851** to block **853** is taken where the QFASTFLAG is cleared and the subroutine returns to the main loop. If not, then the preliminary fastest candidate is no good, and the subroutine returns to the main loop without clearing the QFASTFLAG.

The preliminary fastest candidate must also be tested to determine if it is a double of the patrol speed. Real targets often travel at about the same speed as the patrol car so the closing speed in moving mode would appear to be a false double signal when it is in reality a valid target. About 20 db suppression of false doubles is achieved by the double balanced mixer, but further suppression in the software is desirable since the second harmonic of the patrol speed is often quite a strong signal if the patrol speed itself is a strong signal. To avoid suppression of preliminary fastest targets which are travelling at about the same speed as the patrol car in the opposite lane and represent valid targets while suppressing false doubles, the software goes through some screening of the preliminary fastest candidate which is based upon both the true signal power of the patrol speed signal and the fact that false target doubles are usually transitory in nature and will disappear after 1–3 seconds. Therefore, double suppression factors are selected based upon the true signal power of the patrol speed and, in addition, upon a setting recorded by the manufacturer in final road testing of each unit that points to one of a plurality of double noise/signal power ratio suppression factors and double delay factors that are selected based upon the actual test performance of a particular unit in the road test. Generally, if the patrol speed true signal power is not high, a not severe double suppression factor will be selected and a shod double delay factor will allow the candidate to be displayed almost immediately. If, on the other hand, the true patrol speed signal power is high, a more severe double noise/signal power ratio suppression factor and a longer double delay factor will be selected to prevent display of a fastest candidate until it persists for an interval longer than the double delay factor. The details of this processing follow.

Returning to the consideration of test **845**, if the preliminary fastest candidate is a double of patrol speed, path **855** is taken to block **921** on FIG. **29**D which starts a process similar to the process of block **867** to generate an offset into a double suppression factor table based upon the true signal power of the patrol speed signal. This offset generation process is done by steps **921–925**. Once the offset into the double suppression table is generated, path **927** is taken out of test **923** to test **929**. Test **929** determines if the manufacturer set variable DOUBLESET is zero. DOUBLESET is the variable set permanently by the manufacturer during the final road test to take into account the peculiarities of the particular radar unit's performance and is not normally set to zero. If DOUBLESET is zero, path **851** is taken to block **853** where the QFASTFLAG is cleared and processing returns to the main loop. DOUBLESET is set to zero to test whether the radar unit Under test measures up to a good radar unit that will not generate a false double under known test conditions thereby giving the manufacturer a way to make an initial evaluation of the quality of the particular unit. DOUBLESET is normally a number from 0–5. If DOUBLESET is not zero, then block **931** is performed multiply DOUBLESET by the offset number selected earlier by steps **921** through **925** based upon the true signal power of the patrol speed signal. This generates a new index number which indexes into one of 5 different stacked double suppression factor tables, each of which contains a different set of double suppression noise/signal power ratios of increasing severity. The offset is selected based upon the true signal power of the patrol speed, but the DOUBLESET variable will determine which of the 5 tables is entered by the index. The 5 stacked tables each have multiple suppression factors of increasing severity, but the beginning factor of the second table up in the stack is less severe than the last suppression factor of the first table and so on for each of the 5 tables. If the offset is, for example, 5, and the DOUBLESET variable is 1, then the first table in the stack will be entered at the 5th entry. If DOUBLESET is 2, and the offset is 5, the 2nd table will be entered at the 5th entry thereof. The same sort of scheme is used to select a double delay factor. The double delay factors are also stored in 5 stacked tables with entries therein which range from delays of from 80 milliseconds up to 20 seconds. A delay of 20 seconds means that at any normal speed, the target is past the patrol car before the fastest target speed is allowed to be displayed. This type delay would be imposed only for very strong patrol speed signals.

Then test **933** is performed to determine if the noise/signal power ratio of the preliminary fastest candidate is less than the double suppression noise/signal power ratio retrieved from the stacked double suppression table accessed by the current values of the offset and the DOUBLESET variable. If not, the subroutine returns without clearing the QFASTFLAG. If so, block **935** selects a double delay interval from the stacked double delay tables using the same combination offset derived from the DOUBLESET variable. Then test **937** determines whether the retrieved delay value is greater than the previously retrieved delay value. If it is, then the newly retrieved greater delay interval is used and saved in block **939**. If not, then the previously retrieved delay value continues to be used and the processing of block **941** is performed to increment the fast target double delay counter. This processing takes into account the fact that stationary objects in the distance that are causing double bounce signals may cause stronger double bounce signals as the patrol car approaches them. The stronger signals require greater delays until the geometry of the situation causes the strength of the double bounce signal strength to fall off. After the processing of block **939** is performed, block **941** is performed to increment a fast target double delay counter. Then test **943** is made to determine if the incremented count is greater than the current double delay interval. If it is, the

preliminary fastest candidate is valid and can be displayed, and path **851** to block **853** is performed where the QFASTFLAG is cleared and the subroutine returns. If not, the routine returns without clearing QFASTFLAG and the preliminary fastest candidate is not yet ready for display but may be displayed on subsequent subroutine calls when the double delay count exceeds the double delay interval.

When the FASTQUAL subroutine returns to the main loop, it returns to test **632** on FIG. **23B**. At that point, there is always a spectral line identified as the fastest signal stored in a variable FASTLINE and there will be a flag QFASTFLAG, which, if cleared, means that FASTLINE is a valid fastest signal that is eligible for display, and, if not cleared, means that FASTLINE is not valid. Test **632** determines if the middle display window has a locked target speed displayed therein. If so, the fastest target speed will not be displayed as symbolized by path **634**. If not, then test **636** will be performed in the preferred embodiment to determine if the operator has selected fastest mode and desires to see the fastest target displayed in the middle window. In some embodiments, the fastest speed, if available, will always be displayed if there is no locked speed value being displayed in the middle window. In the preferred embodiment, if fastest mode is not selected, path **634** is taken that bypasses all processing related to the fastest target speed display mode.

If fastest mode is selected, test **638** determines if the QFASTFLAG has been cleared. If so, then test **640** determines if FASTLINE is within ±1 spectral line of the old FASTLINE on the last pass through this section of the main loop. This is done as a quality guarantee in that the fastest speed is not deemed to be ready for display until nearly the same value for FASTLINE has appeared on two consecutive passes. This is done because radar targets are more likely to be real if they have appeared twice in a row. The reason for the ±1 spectral line tolerance is to allow the target to be accelerating or decelerating and still qualify. Regardless of the results of test **640**, blocks **642** and **644** replace the value of old FASTLINE with the current FASTLINE value.

If test **638** indicates that QFASTFLAG has not been cleared, block **646** stores a constant in old FASTLINE that is out of the range of a valid spectral line number. This is done so that an invalid FASTLINE will not be used in the comparison step of **640** and pass a valid new FASTLINE through test **640** on the first pass.

After block **646** is performed or block **644** is performed, path **648** is taken to a process to be described below which blanks the center display.

After block **642** is performed, test **650** determines if sufficient time has elapsed since the transmitter was turned on for the RF quality to be acceptable. If not, path **648** is taken to blank the middle window. If sufficient time has elapsed, test **652** is performed to determine if the RFI flag was set. The RFI flag is set by a process not shown which goes through a completed buffer full of sample words and ORs all the sample words in the buffer to see if any word has set the RFI bit. That is, the 2048 24-bit words in the data block stored in the buffer are logically "ORED" into a test word. If an RFI (Radio Frequency Interference) condition existed during any of the received words in the block, it will appear at the corresponding bit position in the test word and an RFI flag will be set. Also, each received data word from an antenna unit has certain bit positions that are always zero. If these positions are not zero in the test word, a loss of receive synchronization is indicated and the main program will act to re-initialize the SSI. If test **652** indicates the RFI bit has been set at any time during the data block acquisition period, then path **648** is taken to blank the middle window.

If the RFI flag has not been set, test **652** determines if the RFI timer is still running. If so, path **648** is taken to blank the middle window. The RFI timer is started whenever the RFI flag has been set, and this timer continues to run for about 0.5 seconds after the RFI flag has been cleared. This is done because if the RFI flag has been set, it is undesirable to allow fastest target speed display immediately after the RFI flag has been cleared to allow transients to clear the system and to allow the sensitivity of the system to be re-established in case the system was saturated with a very strong RFI signal. There is also an RFI LED on the front panel of the unit, and the RFI timer will keep this indicator lit for a reasonable time so that it can be noticed by the patrolman. If test **652** indicates the RFI timer is not still running, test **654** determines if there is currently displayed a strongest target speed in the left display window. If not, then it is preferred to not display any fastest target speed, although in alternative embodiments, this qualification may be omitted. If the strongest target display is blank, path **648** is taken to blank the middle window.

The processing of the steps within dashed box **656** (steps **658**, **660**, **662**, **664**, **666**, **668**) determine if the strongest target signal is rapidly decreasing in frequency indicating either a rapid deceleration of the target or a cosine effect apparent decrease in speed as the target passes the patrol car in the opposite direction. This rapid decrease in frequency can cause a chirp which causes scalloping in the FFT spectral results which can cause a false fastest target speed to be detected. The processing in dashed box **656** determines whether this rapid decrease in frequency is occurring by checking the spectral line values recorded in the circular history buffer created by the process of block **626** on FIG. **23B**. This is done by checking the quality of the strong signal queue by determining if at least one good signal-to-noise reading exists in the last 4 entries in the history queue to prevent fastest display if the strongest target signal has disappeared and the strongest target display is only timing out. Another quality check is to determine if at least one NEWLINE flag has been cleared in the last 4 history entries which means the strong target signal is not a new spectral line and has occurred at least twice consecutively. Then the history entries are checked for rapidly decreasing frequency of greater than one line difference across 4 samples (greater than 0.8 MPH deceleration in 0.16 seconds). If the quality check fails or rapid frequency decrease is occurring, then path **648** is taken to blank the middle window.

Otherwise, test **670** determines if the unit is in moving mode. If not, then path **672** is taken to block **674** which loads the spectral line number of FASTLINE into a variable called FASTTARGET INDEX. FAST TARGET INDEX is a variable that saves the FASTLINE spectral line number in RAM since in subsequent processing FASTLINE's value in a DSP register (a closing speed) is going to be altered by subtracting the patrol speed to derive the fastest target speed. If the system is in moving mode, test **676** is performed to determine whether a timer is running indicating patrol speed was recently acquired. This timer is started whenever a new patrol speed is acquired. This timer and the test of **676** impose a 0.2 second delay to clear out the history queue to prevent erroneous readings from being displayed momentarily when the unit initially acquires patrol speed. If the timer is running, path **648** is taken. Otherwise, test **678** determines whether the unit is in patrol speed tracking mode. If not, path **648** is taken to blank the middle window. If patrol tracking mode is active, then block **680** determines the fastest target speed by subtracting the patrol speed (PATROLLINE) from the fastest speed candidate (FASTLINE) returned by the FASTQUAL subroutine.

Then block **682** is performed from either block **680** or path **675**. Block **682** converts the spectral line number derived by block **680** to miles per hour in BCD format and updates the center display to display the fastest target speed and turns on the fastest icon. In some embodiments, the fastest icon can be eliminated as not critical to the invention.

Then block **684** initializes a timer to initialize a time to blank the middle display if the fastest speed is not updated within a predetermined interval (preferably 1.5 seconds).

The processing which blanks the middle display is symbolized by test **686**, block **688**, and block **690** all of which is led to by path **648**. Test **686** is reached whenever any condition occurs which requires that the fastest signal speed not be displayed. This test determines whether the fast speed blanking timer has expired. This timer is started when block **684** is executed indicating a new fastest target speed has just been displayed and runs for a predetermined interval of 1.5 seconds in the preferred embodiment. If the fast speed timer has expired, block **688** blanks the center window and any fast icon or LED, if present. Then block **690** is performed to reset the fast double delay minimum value and fast double delay count counter (see steps **937**, **939** and **941** on FIG. **29**E).

After blocks **690** or **684** are performed or if test **686** indicates that the fast speed timer has not expired or if path **634** (fastest mode is not enabled or there is a locked strongest target speed in the middle window) has been taken from any previous step, test **692** is performed to determine if all flags are OK indicating the strongest target signal is acceptable for display update. The flags that are tested are: RFI, RFI timer, Signal Limiting (indicating whether there had been a momentary signal overload in which case the buffer of sample data is not processed), RF OK, NEWLINE, QSN FLAG (signal-to-noise ratio acceptable). Test **692** starts a process of decision for displaying strongest target speed. If any of those flags indicate the strongest target signal is not acceptable for display, path **694** is taken to test **696** which starts a process of blanking the strongest target display window on the left and the fastest target display in the middle window. Test **696** determines if the target speed blanking timer has expired. If it has, block **698** blanks the strongest target speed display and the fastest target speed, if displayed and resets the following variables: double delay; double count; fast double delay minimum and fast double delay count. These variables are reset because they are related to screening out false targets which are patrol speed doubles appearing in either the strongest target display or the fastest target display.

After the processing of block **698**, path **702** is taken to some prior art processing found in the Stalker radar unit.

If test **692** indicates that all flags are OK, then block **704** bandpasses the data buffer to set a digital bandpass filter centered around the spectral line of the strongest target signal (STRONGLINE). The filtered output samples from the filtering process are stored in a temporary buffer. Block **704** calls another routine to measure the frequency of the STRONGLINE signal defined by the filter output in the temporary buffer by finding the zero crossings and measuring the time interval between the zero crossings by counting samples and calculating the frequency from this data.

Next, test **706** determines whether the unit is in moving mode. If not in moving mode, path **710** is taken to bypass the processing which determines whether patrol speed has been newly acquired etc. If the unit is in moving mode, test **708** determines whether the patrol speed has been newly acquired. If so, path **694** is taken to the process of test **696** to test for blanking of strongest target display. If patrol speed has not been newly acquired, test **712** determines whether patrol speed is been tracked. If not, path **694** is taken to the process of test **696** to test for blanking of strongest target display. If yes, block **714** subtracts patrol speed frequency from strongest target frequency and passes the frequency difference to block **716** where the frequency difference is converted to miles per hour using the relationship that Doppler shift results in a frequency shift of about 103 Hertz per mile per hour. If test **706** determines the unit is not in moving mode, the frequency determined in the process of block **704** is passed to block **716** for conversion to miles per hour. Thereafter, test **718** determines if the newly acquired strongest target speed is as fast or faster than the current fastest target display. If this situation exists, block **720** is performed to blank the fastest display window. In either case, block **722** subsequently initializes a timer for target speed blanking for a 1.5 second timeout.

After block **722** is performed, or if test **696** indicates the strongest target blanking timer is not expired, or after the processing of block **698**, path **702** is taken to the balance of the main loop processing, most of which is in the prior art and none of which is critical to the claimed inventions.

Referring to FIGS. **30**A through **30**B, there is shown a simplified flow chart of the processing of another embodiment that is similar to the processing flow of FIGS. **23**A–E, **24**A–E and **29**A–G but simpler. The flow chart is self explanatory in light of FIGS. **23**A–E, **24**A–E and **29**A–G and will not be discussed further herein except briefly. Those skilled in the art will appreciate that the virtual gauntlet of qualification and disqualification tests that the fastest speed candidate, the patrol speed candidate and the strongest target signal candidate go through in the processing of FIGS. **23**A–E, **24**A–E and **29**A–G before display is allowed is very comprehensive, and simpler embodiments can easily be envisioned where one or more of these tests is eliminated or modified. The flow chart of FIGS. **30**A and **30**B is intended to symbolize these simpler embodiments where subsets and supersets, different permutations or combinations or modifications of the gauntlet of tests of FIGS. **23**A–E, **24**A–E and **29**A–G are used. Therefore, blocks **900**, **902**, **904** and **906** on FIGS. **30**A and **30**B are intended to cover any different combination or permutation, subset or superset or other modification of the qualification and disqualification tests for the strongest target signal, fastest target signal and the patrol speed signal. Therefore, blocks **900**, **902**, **904** and **906** on FIGS. **30**A and **30**B are intended to cover any different combination or permutation, subset or superset or other modification of the qualification and disqualification tests for the strongest target signal, fastest target signal and the patrol speed signal. These different permutations, subset, supersets or other modifications of the gauntlet of tests of FIGS. **23**A–E, **24**A–E and **29**A–G are referred to in the appended claims as "predetermined criteria" or "predetermined selection criteria" or "predetermined signal strength criteria".

Referring to FIG. **31**, there is shown an alternative embodiment for a gain control system for the antenna. Functional blocks that have the same reference numbers as blocks in FIG. **6** do the same things except for the shift register **300**. In this embodiment, the shift register **300** receives serial format data only for the self test signal and the transmitter on/off control signals and converts them to parallel format under control of signals from the timing generator and data formatter **252**. No digital gain control data is received. Gain control is implemented by an analog gain control system comprised of amplifier **109**, level detector **111** and analog-to-digital (hereafter A/D) converter **113**.

The amplifier **109** is a variable gain amplifier which has its gain set by an analog signal on line **115**. The output of the amplifer **109** is input to a level detector **111** which compares the signal to upper and lower limits. In some embodiments, these limits are fixed, and in other embodiments, the limits may be adjustable by the user either through analog circuitry such as two potentiometers coupled to upper and lower limit inputs or by way of digital data generated by the processor in the counting unit under user control and sent to the antenna unit for conversion to analog upper and lower limit reference signals. The level detector passes the analog output from the amplifier **109** to the analog input of the A/D converter **112**, and simultaneously generate a gain control feedback signal on line **115** based upon the results of the comparison of the level of the output signal from the amplifier to the upper and lower limits. The gain control feedback signal on line **115** is also coupled to the analog input of A/D converter **113** which converts it to either parallel or, preferably, serial format digital data which is transmitted to the counter/display unit for use by the DSP in determining true power of received radar signals. In one embodiment, the digital data output by A/D converter **113** on line **117** is sent as a separate serial or parallel data link to the counter/display unit. In the preferred embodiment, the output data is serial format and is merged into the frames of serial data sent to the counter unit on line **268** time cant of the feedback loop to be much long timg, takes to fill a buffer with data in the counter/display unit so that the gain does not change appreciably during the time the samples filling the buffer were accumulated. In the preferred embodiment, the time constant is set at 0.5 seconds which represents an interval 10 times as long as it takes to fill a 2048 sample buffer at a clock rate of 44 KHz. The components of the automatic analog gain control system and A/D converter **113** are conventional.

Although the invention has been described in terms of the preferred and alternative embodiments described herein, those skilled in the art may possibly appreciate other alternatives which do not depart from the spirit and scope of the claimed invention. All such embodiments which combine the same concepts disclosed herein to achieve substantially the same results are intended to be covered by the claims appended hereto.

APPENDIX A

```
_DATA P   0000
0AF080 00358C 000000 000000 000000 000000 000000 000000 0D00D1 000000
0D00D3 000000 0D0160 000000 0D015D 000000 000086 00000C 000000 000000
0BF080 002E65 0BF080 002E62 0BF080 002E50 003707 000000 000000 000000
000000 000000 68A100 61F400 000100 64F400 000520 060081 00002A F09800
F098D0 5661D0 5E5900 0C0039 68A100 64F400 000520 61F400 000100 4FDC00
060081 000038 4ED800 4ED8B0 4FDC00 F901B0 5E5900 0BF080 00124A 44C800
47C841 06D800 000053 46C879 45E050 221468 204818 574816 13E041 4ECC54
44605C 4CC818 576016 13E441 4EC850 444858 4CD810 5E4C1E 5F4C41 20AF54
44C87C 47C818 5F4C16 5E5C41 060480 000090 225000 0453A2 382000 3A0100
060580 000079 344000 231900 231C00 231D00 044811 044C15 044B16 205500
06DA00 000072 C4C100 CB8500 44CE00 06D800 000070 4FD9EA CA1DCF 8F8016
8AB8AE 45E1BF CF1C16 D92D00 D58800 230D00 234C2B 21B833 226D00 219A2B
21B300 304000 233800 225400 045811 044415 044B16 205D00 C4C100 CB8500
06DA00 000089 D1AEEA CA0DCF 8F8016 8AA8AE C4C1BF CF0C16 564D00 0456A2
23DA00 0462A3 204E00 204A00 04D6A2 63F400 000100 227400 0462A3 0500A3
0464A3 3B8000 237C00 044B13 044414 62F400 000721 3A8000 65F400 000321
66F400 00041F 75F400 000100 23BE00 0465A2 0466A2 0004F8 4EEA00 C98300
067F80 0000BC C7E400 4CE264 218578 21A7A0 44E3BC 56E418 4CDA40 200010
5E6D14 5FCB14 5E6EE0 4FC4C2 20007C 4FE410 5E5D14 4EEA14 AAC300 00F3B8
CB8300 5E6D3E 5F6600 0460A2 0461A2 0463A2 0464A2 65F400 000321 60F400
000221 4EED00 06FF80 0000CF 48E000 4CDD92 4EED82 485800 00000C 000000
000004 441D00 602100 052220 501E00 541F00 522000 0A36CF 0000F8 0506A0
68B500 08F4BE 002270 0A20D2 0000EA 5EB600 44F400 00FA88 44F445 00FD44
0E90EA 44F445 000080 0E90EB 44D800 0AA402 077084 003FFF 683500 05F420
FFFFFF 68B600 000000 045810 683600 0AA422 08F4BE 002220 0A2077 5EBB00
44F400 000001 60AE44 0E3109 56F400 0003E7 0A2076 0A206D 0E8106 673500
0A204C 0C0109 0A206C 0E8109 673600 5E3B00 5EE000 200003 0AA4AC 000111
0EB117 200040 0C011B 0EB115 44F400 FFFFFF 0C0117 200044 0C011B 051FA0
208E00 045810 602E00 5E6000 68B200 0507A0 0A60C0 000122 0AA524 0C0123
0AA504 0A58C1 000127 0AA523 0C0128 0AA503 683200 0AA42B 0E014F 0A1EF7
000139 0A1E56 0E0156 0AA40A 0A1E77 4CAB00 4C2E00 4CAC00 4C2F00 4CAD00
4C3000 304800 683100 0AA40B 5EAE00 200033 5C2E00 5EAF00 200037 5C2F00
5EB000 44F437 000024 5C3000 0E8147 0AA40A 0C014D 5EB100 200045 0EF14C
0AA429 0C0156 0AA42A 0AA409 0C0156 44F400 000001 5EB100 200044 0E2155
0A1E57 5C3100 449D00 05A220 60A100 509E00 549F00 52A000 000004 452300
08452E 0C0161 452300 612400 052521 085FAF 08F0AF 00001C 0A36EF 00018C
08F4BE 002270 0AA402 0A34CF 00017B 05B721 69B300 000000 45D900 077085
003FFF 693300 05F421 FFFFFF 69B400 000000 045911 693400 0C0189 0505A1
699C00 0B6777 0E8182 0A1CE0 000185 0C0184 0A1CC0 000185 4DD900 4DE100
077085 003FFF 691C00 0AA422 08F4BE 002220 05A521 61A400 45A300 000004
060088 00019C 45DA00 060280 00019B C3BCA3 21C62A 44DCAA 44DCDB B39CA8
16E0DB B3BC22 4D5D00 00F3B8 05F420 FFFFFF 0461A0 0464A0 00000C 0BF080
00128E 06DC00 0001B1 46D900 F09BD8 E19BDE B19BCF B39BDA 21A600 F09BD8
E19BDE B19BCF B39BDA 575A00 00F7B8 05F423 FFFFFF 0464A3 0465A3 00000C
200013 44D81B 068087 0001BF 208645 029040 44D85D 027058 200014 200022
560E00 00000C 060088 0001D4 4EE100 F09BD8 E19BDE B19BCF B39BDA 21E600
47DE00 2000B8 21E600 F4BAE8 C5BAEE A4BAFF 5F6558 45DAFB 5F5900 00F7B8
00000C 200013 060088 0001DF 57E000 4F922A 44E0FE 5F127C 20003A 575842
540F00 00000C 60F413 000220 060081 0001E6 485800 000000 00000C 221800
```


~~Appendix A~~

```
0451A0 0A1E6C 0A58B7 0001EF 0A1E4C 0B1E6C 06FF83 0001FB 0E01F6 0A58B7
0001FB 0C01F8 0A5897 0001FB 045911 045012 0B1E4C 0B1E6C 56F400 000002
222400 231045 0E8202 00000C 0A58B7 000207 0A5897 000204 0C0209 0A58B7
000207 045010 224E00 220400 200044 21C400 222E00 00FEB9 0618A0 018040
00000C 60F413 000221 64F41B FFFFFF 65F400 000208 3D1000 320000 060880
000224 200013 062080 000222 205C05 038402 49D800 626D00 485D00 63F400
000218 65F400 000208 45F400 000001 44DB00 060780 000238 56E300 22B444
205D65 0E7238 48E400 49E500 20000D 03950C 200013 486400 44DB00 63F400
000208 64F400 000218 49DB00 60DC00 060780 000248 61E400 48E300 200005
038001 49E300 485B00 60E400 615C00 63F400 000219 64F400 000209 44DB1B
060680 000254 56E300 205C45 0E2254 496400 44DB00 44AF00 45F400 000166
44F4A0 000003 21C540 21C41B 63F400 000219 73F400 FFFFEF 56DB00 060780
000266 200045 0E0266 496B00 56DB00 63F400 000219 44F400 0000F9 56DB00
060780 000271 200045 0E8271 496B00 56DB00 65F400 000209 300600 060680
00028A 22B400 3D1000 48DC00 229200 49DC00 06D000 000280 23BA05 038402
49DC00 045212 56ED00 57EA00 566A00 576D00 48E500 49E200 486200 495D00
045010 63F400 000219 73F400 FFFFE7 65F400 000220 46F400 000001 47F400
0000FF 060480 0002B4 44F400 0000DF 56DB00 21DD45 020040 44F41B 00001F
200044 22A465 028060 200040 21D013 064180 0002A5 49D810 42ED00 23AF24
20005C 21FD00 200058 200058 42ED00 200024 21FD7D 0E12B2 42ED00 200024
0605A0 200022 486B00 63F400 000211 60F400 000220 3B0800 47F400 000002
060480 0002D5 44EB00 56F400 000006 340145 0E02CB 56F400 0000FA 34F445
0E82CB 56F400 FFFFFB 200040 21D400 228E1B 060B80 0002D4 229844 205C26
48E875 0E82D4 20000D 028008 228E00 495B00 60F400 000209 61F400 000201
62F400 000211 060480 0002FC 48D800 49E200 49E10D 0E02E4 33000D 0E82E7
51F400 7FFFFF 0C02FB 21C403 0E42EB 48E200 0C02F5 0616A0 01DB15 21C400
226E00 200036 06CC20 21D33A 48E200 06D320 200032 00FEB9 0618A0 018048
00FEB9 0618A0 018040 595900 585A00 000000 00000C 60F413 000221 64F41B
FFFFFF 65F400 000208 3D1000 320000 060880 000310 200013 062080 00030E
205C05 038402 49D800 626D00 485D00 63F400 000200 60F400 000221 20001B
060880 00031E 200013 062080 00031B 49D810 0605A0 200022 485B00 64F400
000200 3C011B 42E400 060780 000328 48EC00 205C2S 42E420 486400 63F400
000208 64F400 000218 49DB00 48E300 60DC00 61E400 060780 00033A 200005
038001 49E300 485B00 48E300 60E400 615C00 61E400 63F400 000219 73F400
FFFFEF 44F41B 0000F9 56DB00 060780 000347 200045 0E8347 496B00 56DB00
65F400 000209 300600 060680 000368 22B400 75F400 FFFFF8 48DC00 229200
49DC00 06D000 000357 23BA05 038402 49DC00 045212 48E500 49E200 486200
496500 48ED00 49EA00 486A00 496D00 3D1000 23BA00 56ED00 57EA00 566A00
576D00 045D15 045010 63F400 000219 64F400 000201 65F400 000220 46F400
000001 47F400 000100 060780 000388 48E400 75DB00 0605A0 200032 42ED00
23AF24 20005C 21FD00 0EF380 42ED00 200024 200058 200058 21FD7D 0E1386
42ED00 200024 0605A0 200022 485C00 63F400 000211 60F400 000220 3B0800
47F400 000002 060780 0003A9 44EB00 56F400 000006 340145 0E039F 56F400
0000FA 34F445 0E839F 56F400 FFFFFB 200040 21D400 228E1B 060B80 0003A8
229844 205C26 48E875 0E83A8 20000D 028008 228E00 495B00 60F400 000209
61F400 000201 62F400 000211 060780 0003D0 48D800 49E200 49E10D 0E03B8
33000D 0E83BB 51F400 7FFFFF 0C03CF 21C403 0E43BF 48E200 0C03C9 0616A0
01DB15 21C400 226E00 200036 06CC20 21D33A 48E200 06D320 200032 00FEB9
0618A0 018048 00FEB9 0618A0 018040 595900 585A00 000000 00000C 0A1ECE
000499 0A34B0 000426 0A340F 0E8426 0A348E 0003EA 0A27D7 0003E9 56B000
44F400 000005 45F445 000220 028040 200060 200044 21941B 060BA0 495C00
0C03EF 0A340E 64F413 000221 3C5800 0A16C0 0003F2 64F413 000239 3C4000
```

2 62

~~Appendix A~~

```
20001B 229200 06DC00 0003F8 200005 038402 49DC00 487000 000FFC 224F00
44F400 000221 20004C 21F200 578D00 44F40B 000001 0EA40A 20004C 0EA40A
21E43B 200048 06CD20 200022 57F400 000040 563300 200005 0E8485 623000
0A3430 0A1F68 44F400 FFFFA9 4C2300 61F400 001000 0A1ECB 00041B 61F400
001800 70B000 0BF080 001280 0D01A5 60F400 0003F8 0D01E9 20001B 573100
502F00 0C04C6 44F400 000100 45AF00 2000A1 44F400 000006 219845 028040
44F400 000005 200044 21D200 44F400 000220 21D440 21D000 205413 060B80
00043B 49D800 205C05 038402 487000 000FFC 224400 0A3426 250400 45F4A9
000003 200068 44F448 000220 200048 21F000 000000 49D800 20003A 20003A
49E005 0E9453 20003A 20003A 20003A 200005 0E7454 0A3406 0A16C0 00045B
224F00 44F400 000018 20004D 0E9485 578D00 44F40B 000001 0EA465 20004C
0EA465 21E43B 200048 06CD20 200022 21CF00 44B300 20004D 0E0470 208F00
0603A0 20003A 20004C 200018 0603A0 20002A 0A3486 00047B 573300 57F400
000002 200005 0E049A 20002A 20002A 200005 0E8485 623000 61F400 001000
0A1ECB 000482 61F400 001800 0BF080 001280 0D01A5 0A3297 000491 56B200
44F400 000001 0A3486 00048E 200040 200040 200040 563200 00000C 0A1FED
000495 0A1FF2 000497 0B1F65 0F09AD 0A3410 0F8CD6 00000C 623000 44F400
FFFFC4 443200 0A3430 0E84A4 0A1F68 44F400 FFFFA9 4C2300 61F400 001000
0A1ECB 0004AA 61F400 001800 0BF080 001280 0D01A5 60F400 0003F8 0D01E9
210F00 56AF00 0A34A6 0004B5 57AF00 200014 0EB4BD 44F400 004000 200045
020040 57AF00 20001C 572F00 21E500 44F400 000100 2000A1 44B000 200044
563100 21E800 0BF080 0010D0 200023 44F023 00032D 218F44 44F426 000001
200045 0EF4E0 57702B 00032D 20002B 21A400 0D0E33 448A00 200045 0EA4E0
540A00 0A1FED 0004DD 0A1FF2 0004E0 0B1F65 0F0D08 0D0CD6 00000C 5E9600
44F400 000006 200046 4C9532 57B040 21DB00 0A1EC6 0004FA 44F400 000033
45F44D 000001 0EF4F7 63F400 002D3B 60F400 000219 07EB85 63F400 002D4B
0C0501 200064 0EB4FA 21DB00 63F400 002D1B 60F400 000219 07EB85 63F400
002D2B 61F400 000201 07EB87 62F400 000211 44E000 340700 0A1EC6 00050B
340400 06D400 000512 5ED900 5FDA65 0E0512 00008C 0C0514 045810 0C05E0
44E000 20517D 0E05E0 0A37E1 000523 0A37C0 00052A 57F400 0000A2 57F44D
0000AE 0E052A 20004D 0E05E0 0C052A 57F400 0000AC 57F44D 0000B8 0E052A
20004D 0E05E0 0A1EC6 0005D8 60F400 000220 209800 49F000 000FFC 48E800
5EE105 0E75DF 57B100 46F42E 000005 47F45D 000007 020058 21E600 200078
21F800 45AF00 47F400 000200 47F4F9 000003 20007C 20005C 47F44C 000001
06D800 00054B 0E254B 00008C 0C05A2 200078 57B100 47F42E 000003 20007D
0E8557 45AF00 47F400 000200 2000F9 20004D 0E0596 0A340C 0E855E 20001B
577000 000328 577000 000329 57B000 21E73B 47F478 000003 20007C 20005C
47F44C 000001 06D800 00056B 0E256B 00008C 0C0583 200078 57F400 00000F
20004D 0E85DF 61F400 002D5B 71F400 00000C 45B300 060C80 00057C 07D98F
20006D 0E857C 00008C 0C057D 000000 045111 000000 07E985 200065 0E05E0
0C05DF 61F400 002D5B 71F400 000084 45B300 060C80 00058F 07D98F 20006D
0E858F 00008C 0C0590 000000 045111 000000 07E985 200065 0E05CF 0C05DF
61F400 002D5D 45B300 060A80 0005A0 07D98F 20006D 0E85A0 00008C 0C05AD
000000 0C05AD 61F400 002D5B 45B300 060C80 0005AC 07D98F 20006D 0E85AC
00008C 0C05AD 000000 045111 5F9700 45F40B 00000C 0EA5DF 21E700 2000F8
20002A 213900 000000 044911 000000 07E185 200065 0E05CF 71F400 00003C
56F000 000328 07E985 200065 028060 567000 000328 57F000 000329 47F405
000001 0E85DF 200078 577000 000329 0A342C 0A1E69 0B1F65 0E85E0 0A1FCC
0005D7 0A1FCB 0005D7 0A2D76 0F0CD6 00000C 0A1EC3 0005DF 56F400 00000E
200045 0E85DF 0A1E62 0A1E54 0A1FCC 0005E4 0A2D56 0F8CD6 00000C 0BA420
0F0E49 0BF080 00122A 0BF080 0011C7 0A1E50 0E0601 08F4A1 000003 44F400
000001 57F400 00001E 0AA5A5 0005F8 20004C 0E25F3 0C05FE 57F400 00001E
```

3 63

~~Appendix A~~

```
0AA585 0005FF 20004C 0E25FA 0A1E70 08F4A1 0001C3 0D09D9 0A1FD2 00060D
0A29F7 00060D 0A1FCD 00060D 0A1F52 0D09BB 0A1EC1 00060D 0A2C66 0BF080
001183 0BF080 002E6F 0BF080 002E80 0BF080 002ECF 0D01E2 0A1E75 0A1E74
0A1E73 0A1E72 0AA522 0A1ECB 000640 0A1E4B 44F400 00179C 22EE00 57F445
000028 0E162C 0A1E52 22E500 47F465 000001 0E2620 20007C 0E2625 0A1E70
0AA502 60F400 001040 0D01B8 44F400 0017DE 22EE00 57F445 000028 0E163D
22E500 47F465 000001 0E2632 20007C 0E2636 0A1E70 44F400 001000 0C0662
0A1E6B 44F400 001F9C 22EE00 57F445 000028 0E164F 0A1E52 22E500 47F465
000001 0E2643 20007C 0E2648 0A1E70 0AA502 60F400 001840 0D01B8 44F400
001FDE 22EE00 57F445 000028 0E1660 22E500 47F465 000001 0E2655 20007C
0E2659 0A1E70 44F400 001800 4C2100 4C1000 0D0985 68A100 459A00 00BFB9
0A1ED0 000670 060088 00066D 20001B 575800 5F1200 0C067D 0D01D7 0A1E51
0E6674 0A1E71 0A1E4A 0E867D 44F413 0000FF 548F00 44F446 000005 200045
0EA67F 0A1E4F 0E0686 44F400 FFFFFD 4C2600 0A1F77 0A2B74 0F0CD6 0C068A
0A26F7 00068A 0A2B54 0F8CD6 0A1EC6 000702 0D0020 0D03D3 0BF080 0036A0
0D0FF0 56B000 380103 0EA699 44F400 000064 200045 020040 21D800 0A1EC7
0006F2 44F400 00000B 200045 029040 21D800 0BF080 00125A 0D01E2 060580
0006AB 0D002C 0D0FF0 56F400 000180 4CA100 200040 5C2100 0BF080 002F0A
0C06EA 0A1ED3 0006B4 25FF00 4D1A00 0C06E2 5E9A00 4D1A64 47F426 000001
200075 0E76E2 0A1ECE 0006E2 0A1EF2 0006E2 0A1EEF 0006E2 0A26F7 0006E2
0A1EF1 0006E2 208E00 200065 0E16E2 0B1F65 0E86E8 47F400 000100 44AF00
2000C1 0A1EE8 0006D1 200064 0C06D2 200060 21C500 44F400 004000 2000A0
0BF080 0010D0 0604A0 200023 218400 0D0E33 218F00 0D0D2F 44F400 FFFFD3
4C2300 0C06E7 0A1F56 0E06E8 0B1F65 0E86E8 0D09BB 0D0CD6 44F000 000219
5E9300 4C1344 47F426 000002 200075 0E07DB 0A1E55 0C07DB 0BF080 001261
0D01E2 060580 0006FD 0D002C 0D0FF0 56F400 000180 4CA100 200040 5C2100
0D0213 0BF080 0010A2 0C070F 0D0FF0 060780 00070B 0D0020 0D0FF0 56F400
000100 4CA100 200040 5C2100 0D02FF 0BF080 00108F 0D04E1 5E9300 4C1344
47F426 000002 200075 0E0717 0A1E55 68F000 000BA0 051FA0 4C6000 0A1ED5
00071E 0A6068 0A1ED4 000721 0A606C 045810 05F420 FFFFFF 687000 000BA0
0BF080 0031AE 0BF080 0032C1 0A1FF2 0007DB 0A1EC1 0007DB 0A1ED3 000733
24FF00 4C1A00 0C07D0 5E9A00 4C1A44 47F426 000001 200075 0E77D0 0A1ECE
0007D0 0A1EF2 0007D0 0A1EEF 0007D0 0A26F7 0007D0 0A1EF1 0007D0 0B1F65
0E87DB 0A1FEB 0007D0 68F000 000BA0 051FA0 060480 000750 0A78EC 000750
00008C 0C0753 000000 0460A4 0C07D0 68F000 000BA0 060480 00075C 0A78C8
00075C 00008C 0460A4 0C07D0 380300 47F400 0000FF 5EE800 200076 21C500
5EE000 0460A4 200076 47F464 000001 0EF76A 200075 0E775A 208600 0A1EC6
000779 0A1FE8 0007D0 0A3490 0007D0 4C7000 000986 208E00 47F400 000100
45AF00 2000F7 21C400 463E00 4C7000 000987 057060 000988 45F400 003F5C
2000A0 0BF080 0010D0 0604A0 200023 218400 0D0E33 540B00 218F00 0D0D2F
44F400 FFFFD3 4C2300 0A1F75 0E87DA 60F400 000220 64F400 000A00 060081
000796 56D800 5C5C00 44AF00 4C5C00 44B000 4C5C00 44BD00 4C5C00 4C9A00
4C5C00 60F400 000982 060480 0007A4 4CD800 4C5C00 60F413 000FF8 060480
0007AA 44D800 4C5C00 4CF000 000986 4C5C00 4CF000 000987 4C5C00 4CF000
000988 4C5C00 448B00 4C5C00 44BD00 447000 000218 48F000 000FFD 487000
000208 60F400 000200 3C2000 062080 0007C4 48D800 586C00 5C5C00 68F000
000BA0 64F400 000B50 051FA0 062080 0007CD 4CF800 4C5C00 0460A4 0C07DA
0A1F56 0E07DB 20001B 577000 00032A 577000 00032B 0B1F65 0E87DB 0D09B7
0D0CD6 61F400 001000 0A1ECB 0007E1 61F400 001800 789300 0D01A3 0D0FF0
0A34EF 00085E 0A36EF 00085E 0A2052 0ABF2D 0A2054 0E885E 0A2053 0E885E
0A1EF0 00085E 44F413 0000FB 548F00 44F446 000001 200045 0EA7FC 0A1E70
56BC00 200040 563C00 0C085E 0A1ECE 00085E 0A1EF5 00085E 0A1EF4 00085E
```

4 64

98

~~Appendix A~~
~~(28 Pages Total)~~

```
0A1EF2 00085E 0A1EEF 00085E 0A26F7 00085E 0A1EF1 00085E 60F400 000BF8
0D01E9 210400 5F9300 45F400 000002 47F468 0000FF 46F47D 004000 0E0817
21E700 2000B8 212E00 200045 0E885E 5F9300 47F46C 000001 20007D 0E9821
21E700 2000B8 212E00 200045 0E085E 208800 0A1EC6 000839 0A3490 00085E
210F00 56AF00 0A1EC7 000836 0A1EE8 000833 200014 218800 0C0839 200010
218800 0C0839 20001C 0EB85E 21A800 0BF080 0010D0 0604A0 200023 218F00
21840B 0EA85E 0D0E33 540800 0A1E42 0E8859 44F400 FFFFD3 4C2200 44F400
FFFFEC 4C2500 689300 603D00 0A1FE5 000859 0D0CD8 0A1FD5 000859 56BD00
44F400 000001 44BE40 200045 0AF0A9 000859 0D09B7 0BF080 00107C 789300
781100 0C086E 0A1F57 0E086F 20001B 577000 000328 577000 000329 577000
00032A 577000 00032B 573D00 0D09B7 0A340C 0B1F65 0F09CE 0D0CD6 0B1E66
0BF0A0 0012AD 0B1E66 0BF0A8 0012D2 0BF080 00115B 0BF080 0010DC 0A1FC5
000897 0A28F7 000897 0A1F45 0A1F42 0A1F41 0A1F44 0A204F 0D09BA 0D09C8
0A1FD2 00088F 0D0D2D 0A1EC6 000896 0A1FED 00088F 54F000 00032C 540A00
0C0895 0A1EC6 000896 0A34B0 000895 0D09AD 0C0896 0D0D08 0D0CD6 0BF080
003457 0A1FD3 0005E5 0BF080 001055 0C05E5 56AE00 44AD00 209044 0EA8B3
0E38A6 45F400 000020 200060 45F400 FFFFE8 051FA0 21D100 06CE00 0008B2
5FD800 20006D 0E78B1 00008C 0C08B7 602D00 045111 0460A1 00000C 602D00
0C089E 222E00 46F403 000004 0EA8B3 5FD800 47F45D 00000C 0E98B5 24007D
0E78B5 221200 56AE1B 220500 310065 0EA8B3 5FD800 20592E 220548 21E465
0E28C6 5FE000 20002E 46F448 0000D5 22505D 0E18E2 46F400 000004 47F400
000014 5FD800 06D100 0008E0 20002E 20005D 0E98DE 20007D 0EF8E0 045010
00008C 0C08B5 5FD800 0C08B3 310013 562C00 5FD800 45F400 000001 0A2B16
060D80 00092C 205913 20000B 060880 0008F6 0E28F1 5FD800 20000B 0EB8F5
20006C 200060 0C08F6 200068 21C60B 0A2B16 0E8901 20000B 0E28FD 5FD800
20000B 0EB900 20006C 0C0901 200068 200013 20000B 060580 00090D 0E2908
5FD800 20000B 0EB90C 20006C 200060 0C090D 200068 21C70B 060380 000919
0E2914 0A2B36 5FD800 20000B 0EB918 20006C 200060 0C0919 200068 21C70B
44F450 000005 44F445 00000C 0E9926 20EE45 0E7927 44F454 000003 200026
20CE45 0E1929 045010 00008C 0C08B5 200074 56AC00 200037 562C00 045010
0460A1 602D00 21C500 44F400 0017C0 44F446 001000 260045 0EA93C 44F400
001040 46F445 000025 0E2953 4D7000 000989 54AB00 5C7000 00098A 44F400
00187F 45AC46 5E7000 00098B 200065 0EA954 44F400 1FE780 54AB00 200046
240062 542B00 5C7000 00098C 0A2B34 447000 00032E 00000C 57F000 00032E
44F400 000001 44F448 00000F 24004D 577000 00032E 0AF0A2 000962 0A2B35
447000 00032E 00000C 0A1FE9 000979 0A2D6E 0A1C24 0A1E4E 0A1E4D 44F400
FFFFD4 4C2A00 0A2064 44F400 FFFFFD 4C2400 0A1EE5 000977 44F400 FFFFEC
4C2500 0BF080 00107C 0D09CE 0D0CD6 00000C 0A1F40 0A2D4E 0D0CD6 0A1C04
0A1E4E 200013 5E2400 5E2500 0BF080 001081 00000C 0A1ECE 00099A 47F400
400000 46F400 100000 0A1F54 0E0991 47F400 700000 46F400 080000 45F400
000001 568E00 578C00 570D00 200075 0E099B 200055 0E899F 00000C 20000B
0EA9A5 20006C 0C09A4 46F400 000007 20005D 0EA9A5 200068 570C00 0A1F74
569C00 46F400 FFFFF8 458C56 200062 541C00 00000C 5EAB00 45F400 FC1000
47F466 0148BA 250072 5C2B00 457000 00032D 00000C 0A1F55 0F89BB 00000C
0D09CE 5EAB00 44F400 1FFFFF 45F446 02B840 5C2B00 5EAC00 200066 5C2C00
0A2D40 0A1F55 00000C 0D09BA 44F400 FC1000 5EAB00 200046 5C2B00 00000C
0A1F6B 5EAC00 44F400 FF4FFF 45F446 804205 5C2C00 5EAD00 200066 5C2D00
00000C 0D089E 47F400 00003F 200076 47F450 000024 0A2B14 0E89ED 0A2B15
0E0A1A 47F400 000025 47F475 000026 0E29EA 0B1F4F 0C0B72 200075 0EAC09
00000C 219875 0E29F7 0A1FE5 0009F8 46F400 FFFFD3 4E2800 0A1F63 0E09FF
0C09F8 0A1F43 60F400 0036C7 0A1FE5 000A02 0BE880 0D0CD6 00000C 0BF080
0010B5 00000C 0A1FE4 000A1B 0A1FE2 000A20 0A1FE1 000A2B 47F400 000009
```

~~5~~ 65

~~Appendix A~~

~~(98 Series Tools)~~

```
60F475 000C30 0EAA17 47F400 000012 60F475 000BCB 0EAA17 47F400 00002E
60F475 000BE8 0E2A1A 0BE080 0D0BC3 0D0CD6 00000C 47F400 000026 200075
0EAC07 00000C 47F400 000024 47F475 000025 0EAA27 200075 0E2A1A 0D0B83
0D0B7A 0D0CD6 00000C 270000 47F475 000025 0EAA47 47F475 000018 0EAA47
47F475 00000A 0E2A3F 5E9B00 47F400 000001 200075 0E2A1A 0A206F 46F400
FFFFD3 4E2800 00000C 200075 0EAA43 0A204F 00000C 0A204F 0E0A1A 0B204E
00000C 0D0B5E 0D0A4E 0BF080 00107C 0D0CD6 00000C 00000C 0A1F65 0A1F61
0D0DD6 46F400 FFFFD3 4E2800 0BF080 0010B5 00000C 0A20CE 000A5B 0D0E49
00000C 44F400 FFCDA6 4C2A00 0D09C7 0A1E70 0BF080 0010B5 0D097B 0A3410
0A340F 0A2050 07F086 00001A 30001B 06C600 000A6C 07D885 200068 21A500
07E08F 20006D 0EAA71 44F400 000001 4C3B00 44F400 000006 440C00 0D09A6
0A36EF 000A78 0ABF2D 0BA407 45F400 000001 4D3B13 0A2056 0A2056 0E0A80
0A2055 60F400 000FE2 61F400 00000C 07D884 075984 045911 07D884 075984
060280 000A94 0A2056 0E8A94 0A2055 0E0A8E 200060 0C0A8E 0BA407 44F400
00233A 44F445 002288 0E7A9C 200045 0E1A9D 0A2070 60F413 000378 060082
000AA1 565800 44F400 001000 4C2100 060780 000AB6 0D0020 60F400 000378
65F400 000320 060082 000AB1 44E000 5EDD00 200040 565800 56F400 000100
4CA100 200040 5C2100 65F400 000379 75F400 000100 60F400 000221 4EED00
06FF80 000AC2 44DD90 46ED82 485800 60F413 000222 34001B 320000 06FE80
000ACB 205C05 038402 49D800 60F400 000220 224E00 44F400 000080 225845
0AF0AA 000AD5 0A2070 56E800 44F400 000400 200045 0E1ADB 0A2070 60F400
002C55 0A20F0 000AF7 301000 0D0B39 303500 0D0B39 306500 0D0B39 380100
0BF080 001122 0D0E0B 360C00 0D0B2F 0D0B3F 380000 0BF080 001122 0D0DEA
360C00 0D0B2F 0D0B3F 0A206B 0A206A 60F400 002C53 5EAC00 07D884 5FAD42
07E084 5C2C4A 5D2D00 0D0CD6 60F400 000FE0 61F400 00000C 07D884 075984
045911 07D884 075984 0D0CD6 061480 000B19 22EE00 45F400 000800 4CF066
00084E 200045 0EAB15 5E7000 00084E 0BF080 002ECF 0A2056 0E0B0A 0D089E
0A2B14 0BA407 0B1F60 0F8963 44F400 FFCDA6 4C2A00 0A1FD2 000B2B 0D0D2D
0A1EC6 000B2E 0A1FED 000B2C 54F000 00032C 540A00 0D0D08 00000C 0D09BA
0B1E66 0F89AD 00000C 0D0CD6 06D600 000B36 0A2056 0E0B32 0D089E 0A2B14
0BA407 000000 00000C 600800 220F00 0D0D0B 0D0CD8 360800 0D0B2F 0D09C7
360200 0D0B2F 00000C 0BF080 0010B5 0A1EC6 000B5D 0A1FD2 000B52 0B1F51
0E8B4D 0D09C8 00000C 54F000 00032C 540A00 0D0D08 00000C 0A3410 0E0B5D
0A340F 0A342E 44F400 FFFFEC 4C2700 0BF080 001081 0D09BA 0D09AD 00000C
0BF080 0010B5 5E9B00 46F400 000001 46F450 000005 200055 0E2B68 200013
5E1B00 301B00 601B00 0A1F73 00000C 0A1FC5 000B72 0A1FEF 000A47 0C0A27
0A1F41 0A1F42 0B1F6F 0F8A4E 0B1F6F 0F0B7A 0D0CD6 00000C 0A1F65 0A1F62
0D0DBE 46F400 FFFFD3 4E2800 0BF080 0010B5 00000C 5E9400 46F400 000001
46F450 000006 200055 0E2B8B 200013 5E1400 60F433 002E0D 64F433 000840
200033 219800 060880 000B95 07E886 B89803 301400 601B00 0A1F73 00000C
0BF080 0010B5 0BF080 001081 301E00 601B00 0A1F73 0A1F52 0A2B53 0A1EC1
000BA6 0A2C66 0A1F55 0B1E46 0E8BB7 44F400 831A87 441A00 0D09BA 0D09AD
0A3410 0A1EC7 000BB6 0A2C46 0A2B6C 0A1EE8 000BB6 0A2C71 00000C 44F400
862246 0A1EC3 000BBD 44F400 AA7914 441A00 0D09C8 0D09BA 0A2B4C 0A2C51
00000C 0A1F65 0D0D8A 46F400 FFFFD3 4E2800 0BF080 0010B5 00000C 5E9600
0A1EC6 000BD9 0A1EC7 000BD9 46F400 000007 46F456 000008 218700 5E9600
46F450 000018 0C0BE1 46F400 000019 46F456 000002 218700 5E9600 46F450
000006 200056 200072 5C1600 301600 601B00 0A1F73 00000C 5E9600 0A1EC6
000BF8 0A1EC7 000BF8 46F400 000006 46F456 000008 218700 0A1660 0E8C03
5E9600 46F450 000018 0C0C00 46F400 000018 46F456 000001 218700 5E9600
46F450 000007 200056 200072 5C1600 301600 601B00 0A1F73 00000C 0A1FC4
000B43 0A1F65 0A1F64 0F8C26 0D09BA 62F400 002C47 0A1EC5 000C13 62F400
```

~~5~~ 66

~~Appendix A~~
~~(28 Pages Total)~~

```
002C50 5EAB00 07DA85 5FAC62 07DA85 5C2B6A 5EAD00 07DA85 5D2C62 5C2D00
0D09C8 46F400 FFFFD3 4E2800 0BF080 0010B5 0D0CD6 00000C 0BF080 0010B5
0B1E45 44F400 FFFFFF 4C2500 0BF080 00107C 301E00 601B00 0A1F73 00000C
0B1640 301600 601B00 0A1F73 00000C 0BF080 0010B5 0A1EC6 000C4D 0D09BA
0A1F52 0A2B53 0A1F55 301E00 601B00 0A1F73 0B1E47 0E8C48 0A2C46 0A2B6C
0A1EE8 000C47 0A2C71 00000C 0A2B4C 0A2C51 0A1EC1 000C4D 0A2C66 00000C
0BF080 0010B5 0A1FEE 000C62 44F400 FFB1E0 4C2900 0A1FEB 000C63 0B1F52
0E8C63 448800 440900 0D0D2D 0A2B73 0A2C46 0A1F55 0A1EC6 000C62 0D0D08
00000C 0A1F52 0A2B53 0D09BB 0A1EC1 000C6D 0A1EC6 000C6C 0A1EE7 000C6D
0A2C66 0A1EC6 000C74 0A34B0 000C73 0D09AD 00000C 0D0D08 00000C 0A1EC6
000C84 0A1EC7 000C84 301E00 601B00 0A1F73 0B1E48 0E8C80 0A2C51 0C0C81
0A2C71 0BF080 0010B5 00000C 0A20C3 000C81 0B1E41 0E0C8B 0A2C46 0D09B7
0C0C81 0A1FF2 000C8E 0A2C66 0A1EF0 0010C6 60F400 002A06 61F400 000340
693300 061480 000C98 07D884 445900 301300 603700 46F400 FFEF98 4E3400
00000C 0B1E64 0E8CA6 0A1E64 0A2D69 0A2D42 0AA40E 0C0CAD 0A1FC7 000CB8
0A2072 0A1E44 0A2D49 0A2D62 0AA42E 0B1F60 0F8963 0D09B7 0A1E6A 0A1E70
0BF080 0010B5 301E00 601B00 0A1F73 00000C 0BF080 0010B5 00000C 0BF080
0010B5 0A1F4A 0A1F40 0E0CCE 0A3410 0E0CC3 0A342F 0D09CE 0D09B7 0A1FED
000CC9 0A1FF2 000CCC 0A1EC6 000CCC 0D09AD 0D097A 0C0CD2 0A1FE9 000CD5
0A1F60 0D0963 301F00 601B00 0A1F73 00000C 0A1E76 00000C 47F400 00000F
0A1F4B 5EAC00 44F400 FF4FFF 578846 61F47E 002C5A 21B900 45F400 C04205
07E984 61F400 002C6A 5FAD42 21856E 07E984 61F44A 002C7A 46F400 0000F0
568800 0604A0 200023 218656 20CE00 0E2CF7 200003 0EAD05 0C0CFF 61F400
002C8A 0604A0 200023 219900 20CE00 07E984 20004A 61F476 002C7A 219900
000000 07E984 20004A 5D2D00 4D2C00 00000C 558A00 557000 00032C 0A1F51
45F400 FC1001 5CAB00 47F400 00000F 21A67E 21B900 61F400 002CEA 20CD66
07E985 61F400 002CFA 0604A0 20002B 21A67E 21B962 20CD00 07E985 0604A0
20002B 20007E 0EAD27 200062 45F400 028000 0C0D2A 232F00 20000B 0EAD2B
200062 5C2B00 00000C 578900 0A1F51 44F400 1FFFFF 5EAB00 47F446 00000F
21A67E 21B900 61F400 002C9A 44F400 02B860 07E985 5FAC62 61F44E 002CAA
5C2B00 20CE00 07E984 46F44A 0000F0 0604A0 200023 218656 20CE00 0E2D4D
200003 0E2D55 5D2C00 0A2D40 00000C 61F400 002CDA 0604A0 200023 219900
20CE00 07E984 20004A 61F476 002CBA 219900 5EAD00 45F400 FFFFFE 07E984
61F44A 002CCA 200066 07E984 5D2C42 5C2D00 00000C 60F400 002C3A 0A1EC3
000D68 045810 0D09C8 07E084 200042 5C2B00 00000C 60F400 002C3E 78B800
0D09C8 07E884 200042 5C2B00 00000C 4C9700 62F400 002C2A 0C0D7F 5F9500
46F400 00000D 62F458 002C24 21A400 0D0E33 218F00 0D0D2F 0D09CE 5EAC00
07DA85 5FAD62 07E285 5C2C6A 5D2D00 00000C 0D09BA 5F9600 0A1EC6 000D92
0A1EC7 000D92 20002B 20002B 46F42B 000003 46F45E 000001 61F458 002CBA
21B900 5EAC00 07E984 62F442 002C24 5FAD00 07DA85 61F462 002CCA 5C2C00
07E984 20004A 07E285 20006A 5D2D00 0D09C8 62F400 002C3C 0A16C0 000DAE
62F400 002C3D 000000 07E285 200062 5C2B00 00000C 0D09BA 390100 0A2D69
0A2D42 0A1FC7 000DBB 390200 0A2D62 62F400 002C2E 0C0DC5 0D09BA 5F9400
46F400 000001 62F458 002C26 21B900 61F400 002CBA 5EAC00 07E984 200042
5FAD00 07DA85 61F462 002CCA 5C2C00 07E984 20004A 07E285 20006A 5D2D00
0D09C8 00000C 0D09BA 799B00 61F400 002CBA 5EAC00 07E984 62F442 002C28
5FAD00 07DA85 61F462 002CCA 5C2C00 07E984 20004A 07E285 20006A 5D2D00
0D09C8 00000C 0BF080 0009CE 0BF080 0011A5 218400 0D0E33 218F00 62F400
002C32 0D0D81 0A2C65 0D09C8 00000C 57F400 000026 62F400 002C36 0D0D81
0D09C8 5EAB00 44F400 0129C6 200042 5C2B00 00000C 0D09C8 57F400 000347
62F400 002C38 0D0D81 0A2C65 00000C 0BF080 0009CE 0BF080 0011B5 0A20E0
000E17 44F432 733333 218500 44F4A0 000020 200040 200011 0E3E23 44F426
```

+ 67

~~Appendix A~~

```
000063 200045 027040 218400 0D0E33 218F00 0D0D2F 0A2C73 0C0E27 218400
0D0E33 218F00 0D0D2F 44F400 FC1000 5EAB00 44F446 012F48 0A20C0 000E30
44F400 012DC8 200042 5C2B00 00000C 60F413 002C57 46F400 000FFF 208C00
310056 218400 060380 000E46 07D886 208E00 200054 0E8E43 218400 045911
0C0E3E 222C00 0604A0 200033 219100 200040 00000C 0D097B 0A3410 0E0E4D
0A342F 0A2D49 0A2D42 0D0D79 60F400 000012 607000 000327 0D0D63 0BF080
000CD6 380000 0BF080 001122 380100 0BF080 001122 0D089E 0A2B14 0E8E70
56F000 000327 47F400 00000A 200075 0EAE68 0A2C45 0C0E57 0A1EF7 000E68
22CE00 205603 0E2E55 360A00 0D0DEA 0C0E55 47F400 00003F 47F476 00001B
47F475 000012 0E2E8C 0D09BA 0A1F52 0A1F55 0D09C8 0B1F60 0F8963 0B1E66
0F89AD 0BF080 0010B5 0A2C45 0A1EC4 000E88 0A2D69 0A2D42 0D0CD6 00000C
0A2D49 0A2D62 0D0CD6 00000C 270075 0EAEB2 47F475 000024 0EAEC5 47F475
000010 0EAED1 47F475 000019 0EAEEA 47F475 00000A 0EAF1B 47F475 000008
0EAF5E 47F475 00001A 0EAF7C 47F475 000018 0EAF89 47F475 000011 0EAF95
200075 0EAF05 0A20CE 000E55 47F400 000009 47F475 000001 0EAFC9 200075
0EAFBC 0C0E55 47F000 000327 200075 567000 000327 0E2EC2 5E9500 46F400
000001 46F450 000003 200056 5E1500 301500 601B00 0A1F73 0D0D79 0D0D63
0C0FD9 56F000 000327 47F400 000012 20EE75 0E2EB2 0B1E43 0D0D63 301E00
601B00 0A1F73 0C0FD9 47F000 000327 57F400 000009 20007D 0EAFB5 200075
567000 000327 0E2EE7 5E9700 46F400 000001 46F450 000006 200055 0E9EE3
200013 5E1700 301700 601B00 0A1F73 0D0D75 0D09C8 0C0FD9 47F000 000327
200075 567000 000327 0E2EFC 5EB700 46F400 000001 46F450 000003 200055
0E9EF8 200013 5E3700 303700 601B00 0A1F73 78B700 60F400 002E3D 62F400
002C2C 07E88F 0D0D81 0D09C8 0C0FD9 47F000 000327 57F400 000009 20007D
0EAFB7 200075 567000 000327 0E2F13 0B2043 302000 601B00 0A1F73 0D09BA
62F400 002C47 0A20C3 000F46 62F400 002C4D 0C0F46 47F000 000327 57F400
000018 20007D 0EAF51 200075 567000 000327 0E2F37 0A1FEC 000F2D 0A1FEE
000F32 0A1FED 000F2F 0A1F6D 0C0F34 0A1F4C 0C0F34 0A1F4D 0A1F6E 0C0F34
0A1F4E 0A1F6C 301F00 601B00 0A1F73 0D09BA 62F400 002C4A 0A1FEC 000F46
62F400 002C47 0A1FEE 000F46 62F400 002C44 0A1FED 000F46 62F400 002C41
5EAB00 07DA85 5FAC62 07DA85 5C2B6A 5EAD00 07DA85 5D2C62 5C2D00 0D09C8
0C0FD9 44F400 000001 5EB800 44F440 000002 303845 0EFF59 200013 5E6000
601B00 0A1F73 0D0D6D 0C0FD9 47F000 000327 360A75 567000 000327 0E2F77
0BF080 0011A5 21C600 061480 000F76 5E9800 44F400 000001 44F440 0000FF
200046 5E1800 0BF080 0011A5 200055 0EAF76 00008C 0C0F77 000000 301800
601B00 0A1F73 0D0DEA 0C0FD9 47F000 000327 200075 567000 000327 0E2F87
0B2040 0A2041 302000 601B00 0A1F73 0D0E0B 0C0FD9 47F000 000327 200075
567000 000327 0E2F93 0B1F47 301F00 601B00 0A1F73 0D0DB3 0C0FD9 47F000
000327 200075 567000 000327 0E2FAC 5E9900 46F400 000001 46F450 000008
200055 0E9FA3 200013 60F400 002E48 21D800 5E1900 07E887 08C732 301900
601B00 0A1F73 789900 60F400 002E40 62F400 002C30 07E884 0D0D7F 0D0D6D
0C0FD9 0B2051 0C0FD7 60F400 00084F 44F400 000010 0C0FD2 47F000 000327
56F400 000009 60F475 00084F 0E2E55 5FE000 44F400 000001 45F44C 0001FF
0C0FD5 47F000 000327 60F475 00084F 567000 000327 0E2FD7 44F400 000001
5FE000 45F448 0001FF 20006E 5D6000 0BF080 00134F 0BF080 0010B5 0A1FD3
000E55 0BF080 001055 0C0E55 0D0160 0D015D 0D0FE7 0D0FE4 452300 08452E
45A300 085FAF 0B1C07 0AF0A8 000FEC 0B1C03 0A2075 08F0AF 00001C 000004
0BA428 0AF0A8 000FF4 0A1E6F 00000C 0BF080 001037 278000 220E00 0610A0
200033 380872 0BF080 001047 0BF080 001040 200013 061080 00100A 0628A0
000000 0BA423 200037 0AA425 0628A0 000000 0AA405 0AA406 00000C 0BF080
001037 0BF080 001016 0BF080 001037 0BF080 00101D 00000C 27C000 220C00
0610A0 200033 380872 0AF080 001024 274000 20B800 220C00 0610A0 200033
```

~~8~~ 68

~~Appendix A~~
~~(28 Pages Total)~~

98

```
230572 381862 0BF080 001047 0AA406 0BF080 001040 0AA426 56F400 001000
47F400 000001 0BF080 001040 200074 0AF0AA 001035 0AA483 00102E 0AA406
00000C 0AA427 0AA405 0AA404 0628A0 000000 0AA426 0BF080 001040 0AA424
0628A0 000000 0AA425 0628A0 000000 0AA405 00000C 06D800 001052 200033
0AF0A8 00104F 0AA404 0AF080 001050 0AA424 0BF080 001040 000000 0AA404
00000C 0BF080 001062 609B00 0A1F53 4DE000 0BF080 00100D 0BF080 00105F
00000C 200013 0AF080 001063 2E3000 0BF080 001037 380800 0BF080 001047
0AA406 00000C 0D089E 0A2B14 0AF0A0 00107B 47F400 00003F 200050 47F476
00000A 47F475 00002D 0AF0AA 00107A 200075 0AF0A2 00107B 0A1F70 00000C
5E9B00 0A20EB 001081 0A25F7 001088 60F400 000848 56F400 000080 0606A0
5E5800 200013 21D800 60F400 002DEB 000000 07E886 4E1D00 00000C 60F400
000209 70F400 FFFFF7 49D800 0604A0 20002A 48D800 060680 00109F 20000D
0AF0A8 00109F 45F400 7FFFFF 4D6800 48D800 000000 00000C 56B000 45F400
000012 45F460 7FFFFF 60F400 000219 70F400 FFFFE7 57D800 060680 0010B2
20000D 0AF0A0 0010B2 4D6800 57D800 000000 00000C 0A1EF0 0010C6 60F400
00296E 61F400 000340 693300 061C80 0010BF 07D884 445900 301B00 603700
46F400 FFE5C0 4E3400 00000C 0ABF0D 46F400 000320 4E3500 46F400 FFF7CC
4E3600 0A2074 0A2073 00000C 210400 45F400 00D7E4 0A20C0 0010D7 45F400
015B71 2000A0 0604A0 200022 200011 00000C 45F400 000001 0A22D7 0010E6
5EA200 200060 5E2200 0AF0AB 0010E6 0A1F77 0A23D7 0010F1 5EA300 200060
5E2300 0AF0AB 0010F1 0A1F48 0AF0A8 0010F1 0A1F76 0A24D7 0010F6 5EA400
200060 5E2400 0A25D7 001101 0A1EC5 001101 5EA500 200060 5E2500 0AF0AB
001101 0BF080 001081 0A26D7 001106 5EA600 200060 5E2600 0A27D7 00110B
5EA700 200060 5E2700 0A28D7 001113 5EA800 200060 5E2800 0AF0AB 001113
0A1F43 0A29D7 001118 5EA900 200060 5E2900 0A2AD7 001121 5EAA00 200060
5E2A00 0AF0AB 001121 0A204D 0A204C 00000C 0AA427 0AA405 0AA424 0BF080
001158 0BF080 001153 0AA407 230E00 44F400 000001 200046 60F400 000980
0BF080 001153 0AA424 0BF080 001158 0BF080 001153 219823 0AF0A8 00113B
0AA404 0BF080 001158 0BF080 001153 0BF080 001158 0BF080 001153 060880
00114B 0BF080 001158 0BA423 200037 0BF080 001153 000000 0AA427 5E6800
0BF080 001158 0BF080 001153 00000C 0AA425 0606A0 000000 0AA405 00000C
0603A0 000000 00000C 48F000 000209 578D00 21E70B 0AF0AA 001165 20003B
200078 06CD20 200022 300003 0AF0AA 00116D 301C00 060EA0 01D815 060EA0
01D815 221800 60F400 002DF0 4E9D00 07E887 60F4B8 000848 21E600 47F400
600000 56F4B8 000080 21E700 218F70 5E5858 5F585C 5E585C 5F5874 200074
5E5800 5F6000 00000C 380000 0BF080 001122 0BF080 0011A5 0A1FE9 00119A
44F400 00004B 200045 0AF0A1 001199 0A2B72 0D097B 0A1FF2 001195 0B1E66
0F89AD 0A3410 0A1F69 0D09CE 0D0CD6 00000C 44F400 00005A 200045 0AF0AF
0011A4 0A1F49 0A2B52 0B1F60 0F8963 0D0CD6 00000C 5E9800 0608A0 200022
210413 2A0500 4DF040 000980 0604A0 200022 218400 247CA1 21C500 44F4A1
000004 200040 00000C 5E9800 0608A0 200022 210413 2A0500 4DF040 000981
0604A0 200022 218400 2000A0 200032 246432 21C500 44F4A0 000111 200044
00000C 5EBD00 44F400 000001 301044 5C3D00 0AF0A3 001229 683D00 380100
0BF080 001122 0BF080 0011B5 44F411 00005D 200045 0AF0AF 001229 0D097B
0A1E70 08F4A1 000003 300000 683D00 0A2056 0A3410 0D0010 0D089E 0A2B14
0BF0A8 0010B5 0A2056 0AF0A0 0011E1 380100 0BF080 001122 0BF080 0011B5
44F411 00005B 68BD45 0AF0AF 001218 220E00 205803 683D00 0AF0A2 001200
0D09C7 62F400 002C34 0D0D82 0A2B53 0D0CD6 0AF080 0011E1 44F400 00000C
44F445 000024 0AF0A2 001212 0D09C7 0A1FD2 00120F 0A2B73 0D0D2D 0A1FED
00120F 0B1E66 0F8D08 0D0CD6 0AF080 0011E1 300045 0AF0A2 0011E1 683D00
0AF080 0011E1 0D09C7 0B1F60 0F8963 0A1FD2 001226 0D0D2D 0A2B73 0A1EC6
001228 0A1FED 001226 0D0D08 0AF080 001228 0B1E66 0F89AD 0D0CD6 00000C
```

~~9~~ 69

~~Appendix A~~

```
0A2056 0AF0A0 001249 5EBC00 0A1ED0 001237 44F400 000001 44F440 00000F
200046 0AF080 00123B 200003 0AF0AA 001249 200013 5E3C00 0A3CC3 001242
0A2D42 0A2D49 0AF080 001248 0A1EE4 001247 0A2D62 0AF080 001248 0A2D69
0D0CD6 00000C 62F400 000100 225000 384000 231C00 231E00 3B8000 05FFA0
0461A0 0464A0 0465A0 05F423 FFFFFF 0500A2 0466A2 00000C 60F400 002493
341000 044810 385A00 0AF080 001266 60F400 001E7D 341000 044810 386400
6AA100 0509A4 060280 001276 07E084 044810 445C00 07E085 044810 455C00
07E085 044810 455C00 445C00 07E085 044810 455C00 225500 300800 310A00
0501A0 0501A1 0008F8 C29C00 200022 0C0190 60F400 001586 330000 340400
044810 38FF00 0507A3 0503A4 74F400 000800 62F400 000378 0AF080 00129D
60F400 001586 330000 340000 044810 38FF00 0507A3 0503A4 20001B 0604A0
5F5C00 62F400 000B78 74F400 000480 060280 0012A9 07E084 044810 445B00
07E084 044810 445B00 07E084 044810 445B00 24C000 445B00 0008F8 44DB00
00000C 789100 699000 60F400 001B80 330000 340C00 044810 38FF00 0503A3
0501A4 07E084 044810 445B00 07E084 044810 445B00 07E084 044810 445B00
24C000 445B00 0008F8 44DB00 060088 0012CB 46E100 F09BD8 E19BDE B19BCF
B39BDA 5F5900 00F7B8 05F423 FFFFFF 0464A3 0465A3 00000C 789100 699000
60F400 001B80 330000 340C00 044810 38FF00 0503A3 0501A4 07E084 044810
445B00 07E084 044810 445B00 07E084 044810 445B00 24C000 445B00 0A1EE7
00130A 320400 350E00 5F9100 44B000 44F44C 00219D 200048 21F000 0503A2
0501A5 07E084 044810 445A00 07E084 044810 445A00 07E084 044810 445A00
244000 445A00 0008F8 44DB00 45DA00 66F400 000378 0D01C4 05F423 FFFFFF
0464A3 0462A3 0465A3 00000C 0008F8 44DB00 060088 001319 4EE100 F09BD8
E19BDE B19BCF B39BDA 21E600 21E700 2000B8 21E700 2760B8 2000BE 5F5900
00F7B8 05F423 FFFFFF 0464A3 0462A3 0465A3 00000C 60F400 00296E 61F400
000340 061C80 001328 07D884 445900 60F400 002A1A 61F400 000320 060780
001330 07D884 445900 60F400 002A21 61F400 000520 060082 001338 07D884
4C5900 60F400 00276E 388000 318000 068080 001342 07E884 446100 07D884
4C5900 60F400 00286E 61F400 000720 060081 00134A 07D884 4C5900 44F400
831A87 441A00 00000C 0D09BA 0D09C8 6AF000 00084F 72F400 000A00 0A2B40
57E200 0A20D1 00135B 0A2B60 5FEA00 47F400 00000F 21A67E 61F400 002C9A
21B900 5EAB00 07E985 5FAC62 61F400 002CAA 5C2B00 20CE00 07E984 61F44A
002CBA 0604A0 200023 218676 219900 5EAD00 07E984 61F44A 002CCA 000000
07E984 61F442 002CDA 218500 20CE00 0604A0 200023 218676 219900 20CE00
07E984 61F44A 002C5A 0604A0 200023 218676 219900 20AE00 07E984 61F44A
002C6A 5D2C00 07E984 20CF42 0604A0 20002B 21A67E 21B900 61F400 002C7A
20CF00 07E984 61F442 002C8A 0604A0 20002B 21B900 224F00 07E984 61F442
002CEA 5E2D7E 21B900 5EAB00 07E984 61F442 002CFA 224F00 0604A0 20002B
21A67E 21B900 000000 07E984 200042 20CD00 0604A0 20002B 20007E 0AF0AA
0013B4 44F400 028000 200042 5C2B00 00000C 000000 000000 000000 000000
000000 000000 000000 000000 000000 000000 000000 000000 000000 000000
000000 000000 000000 000000 000000 000000 000000 000000 000000 000000
000000 000000 000000 000000 000000 000000 000000 000000 000000 000000
000000 000000 000000 000000 000000 000000 000000 000000 000000 000000
000000 000000 000000 000000 000000 000000 000000 000000 000000 000000
000000 000000 000000 000000 000000 000000 000000 000000 000000 000000
000000 000000 000000 000000 000000 000000 000000 000000 000000 000000
000000 000000 000000 000000 000000 000000 000000 000000 000000 000000
000000 000000 000000 000000 000000 000000 000000 000000 000000 000000
000000 000000 000000 000000 000000 000000 000000 000000 000000 000000
000000 000000 000000 000000 000000 000000 000000 000000 000000 000000
```

~~10~~ 70

~~Appendix A~~
~~(28 Pages Total)~~

000000	000000	000000	000000	000000	000000	000000	000000	000000	000000
000000	000000	000000	000000	000000	000000	000000	000000	000000	000000
000000	000000	000000	000000	000000	000000	000000	000000	000000	000000
000000	000000	000000	000000	000000	000000	000000	000000	000000	000000
000000	000000	000000	000000	000000	000000	000000	000000	000000	000000
000000	000000	000000	000000	000000	000000	000000	000000	000000	000000
000000	000000	000000	000000	000000	000000	000000	000000	000000	000000
000000	000000	000000	000000	000000	000000	000000	000000	000000	000000
000000	000000	000000	000000	000000	000000	000000	000000	000000	000000
000000	000000	000000	000000	000000	000000	000000	000000	000000	000000
000000	000000	000000	000000	000000	000000	000000	000000	000000	000000
000000	000000	000000	000000	000000	000000	000000	000000	000000	000000
000000	000000	000000	000000	000000	000000	000000	000000	000000	000000
000000	000000	000000	000000	000000	000000	000000	000000	000000	000000
000000	000000	000000	000000	000000	000000	000000	000000	000000	000000
000000	000000	000000	000000	000000	000000	000000	000000	000000	000000
000000	000000	000000	000000	000000	000000	000000	000000	000000	000000
000000	000000	000000	000000	000000	000000	000000	000000	000000	000000
000000	000000	000000	000000	000000	000000	000000	000000	000000	000000
000000	000000	000000	000000	000000	000000	000000	000000	000000	000000
000000	000000	000000	000000	000000	000000	000000	000000	000000	000000
000000	000000	000000	000000	000000	000000	000000	000000	000000	000000
000000	000000	000000	000000	000000	000000	000000	000000	000000	000000
000000	000000	000000	000000	000000	000000	000000	000000	000000	000000
000000	000000	000000	000000	000000	000000	000000	000000	000000	000000
000000	000000	000000	000000	000000	000000	000000	000000	000000	000000
000000	000000	000000	000000	000000	000000	000000	000000	000000	000000
000000	000000	000000	000000	000000	000000	000000	000000	000000	000000
000000	000000	000000	000000	000000	000000	000000	000000	000000	000000
000000	F40000	000A60	F40000	3FD961	278000	000706	D88700	598707	F08007
3FD90A	F40000	800061	000000	F40030	2AAA47	C70000	3FE506	038000	3FE406
D98A00	08A007	002206	588C20	028007	3FEA06	D98A00	08A007	002206	F40020
800061	F4A400	009408	F4A200	4EF408	D98A00	08A007	002206	588C20	F40007
152E47	C70000	3FFE06	038000	3FFD06	D98A00	08A007	002206	588C20	000007
00000C	00268D	003CCC	005BD7	006C50	007557	007B19	007F1C	008213	00845B
00862B	0087A6	0088E0	0089E9	008ACD	008B91	008C3E	008CD6	008D5D	008DD6
008E43	008EA6	008F00	008F52	008F9E	008FE3	009024	009060	009097	0090CB
0090FC	00912A	009154	00917D	0091A3	0091C7	0091E9	00920A	009229	009246
009262	00927D	009297	0092AF	0092C7	0092DD	0092F3	009308	00931C	00932F
009342	009354	009365	009376	009387	009396	0093A6	0093B5	0093C3	0093D1
0093DF	0093EC	0093F9	009406	009412	00941E	00942A	009435	009441	00944C
009456	009461	00946B	009475	00947F	009489	009492	00949C	0094A5	0094AE
0094B7	0094BF	0094C8	0094D0	0094D9	0094E1	0094E9	0094F1	0094F9	009501
009508	009510	009517	00951F	009526	00952D	009534	00953C	009543	00954A
009550	009557	00955E	009565	00956B	009572	009579	00957F	009586	00958C
009592	009599	00959F	0095A5	0095AC	0095B2	0095B8	0095BE	0095C5	0095CB
0095D1	0095D7	0095DD	0095E3	0095E9	0095EF	0095F5	0095FC	009602	009608
00960E	009614	00961A	009620	009626	00962C	009632	009639	00963F	009645
00964B	009651	009658	00965E	009664	00966B	009671	009677	00967E	009684
00968B	009691	009698	00969F	0096A5	0096AC	0096B3	0096BA	0096C1	0096C8
0096CF	0096D6	0096DD	0096E5	0096EC	0096F3	0096FB	009703	00970A	009712
00971A	009722	00972B	009733	00973B	009744	00974D	009756	00975F	009768

~~Appendix A~~

009771	00977B	009784	00978E	009798	0097A2	0097AD	0097B8	0097C3	0097CE
0097D9	0097E5	0097F1	0097FD	00980A	009817	009824	009832	009840	00984E
00985D	00986D	00987C	00988D	00989E	0098AF	0098C1	0098D4	0098E7	0098FB
009910	009926	00993C	009954	00996C	009986	0099A1	0099BD	0099DA	0099F9
009A19	009A3C	009A60	009A86	009AAE	009AD9	009B07	009B37	009B6B	009BA3
009BDE	009C1F	009C64	009CB0	009D02	009D5C	009DBE	009E2B	009EA4	009F2B
009FC3	00A06E	00A133	00A215	00A31E	00A457	00A5D0	00A79F	00A9E4	00ACD7
00B0D3	00B68A	00BF7C	00CFC1	00F7FA	009C3D	3FB2E6	3F8669	3F4852	3F2760
3F1551	3F09CE	3F01C8	3EFBDB	3EF74A	3EF3AA	3EF0B5	3EEE40	3EEC2D	3EEA67
3EE8DD	3EE785	3EE655	3EE546	3EE454	3EE37A	3EE2B4	3EE200	3EE15C	3EE0C5
3EE039	3EDFB8	3EDF41	3EDED1	3EDE69	3EDE08	3EDDAD	3EDD57	3EDD06	3EDCBA
3EDC72	3EDC2D	3EDBEC	3EDBAE	3EDB74	3EDB3C	3EDB06	3EDAD3	3EDAA2	3EDA73
3EDA45	3EDA1A	3ED9F0	3ED9C8	3ED9A1	3ED97C	3ED958	3ED935	3ED913	3ED8F3
3ED8D3	3ED8B4	3ED897	3ED87A	3ED85D	3ED842	3ED828	3ED80E	3ED7F4	3ED7DC
3ED7C4	3ED7AC	3ED795	3ED77F	3ED769	3ED753	3ED73F	3ED72A	3ED716	3ED702
3ED6EF	3ED6DC	3ED6C9	3ED6B7	3ED6A5	3ED693	3ED681	3ED670	3ED65F	3ED64F
3ED63E	3ED62E	3ED61E	3ED60E	3ED5FF	3ED5EF	3ED5E0	3ED5D1	3ED5C3	3ED5B4
3ED5A5	3ED597	3ED589	3ED57B	3ED56D	3ED55F	3ED552	3ED544	3ED537	3ED529
3ED51C	3ED50F	3ED502	3ED4F5	3ED4E8	3ED4DB	3ED4CE	3ED4C2	3ED4B5	3ED4A9
3ED49C	3ED490	3ED483	3ED477	3ED46B	3ED45E	3ED452	3ED446	3ED43A	3ED42D
3ED421	3ED415	3ED409	3ED3FD	3ED3F1	3ED3E4	3ED3D8	3ED3CC	3ED3C0	3ED3B4
3ED3A7	3ED39B	3ED38F	3ED382	3ED376	3ED36A	3ED35D	3ED351	3ED344	3ED338
3ED32B	3ED31E	3ED311	3ED305	3ED2F8	3ED2EA	3ED2DD	3ED2D0	3ED2C3	3ED2B5
3ED2A8	3ED29A	3ED28C	3ED27E	3ED270	3ED262	3ED254	3ED246	3ED237	3ED228
3ED219	3ED20A	3ED1FB	3ED1EB	3ED1DB	3ED1CB	3ED1BB	3ED1AB	3ED19A	3ED189
3ED178	3ED167	3ED155	3ED143	3ED131	3ED11E	3ED10B	3ED0F7	3ED0E4	3ED0D0
3ED0BB	3ED0A6	3ED091	3ED07B	3ED064	3ED04D	3ED036	3ED01E	3ED005	3ECFEC
3ECFD2	3ECFB7	3ECF9C	3ECF80	3ECF63	3ECF45	3ECF27	3ECF07	3ECEE6	3ECEC5
3ECEA2	3ECE7E	3ECE58	3ECE32	3ECE0A	3ECDE0	3ECDB5	3ECD87	3ECD58	3ECD27
3ECCF4	3ECCBF	3ECC87	3ECC4C	3ECC0E	3ECBCD	3ECB89	3ECB41	3ECAF4	3ECAA4
3ECA4E	3EC9F3	3EC992	3EC92A	3EC3BB	3EC843	3EC7C2	3EC737	3EC6A0	3EC5FC
3EC548	3EC483	3EC3A9	3EC2B8	3EC1AA	3EC07B	3EBF23	3EBD9A	3EBBD5	3EB9C4
3EB751	3EB460	3EB0C3	3EAC38	3EA653	3E9E5A	3E92EC	3E8108	3E607D	3E100C
3EC785	804DF2	807B80	80BEF2	80EB95	810E57	812F7E	815210	81776E	81A050
81CD23	81FE27	823386	826D5D	82ABBF	82EEB8	833651	838291	83D37C	842913
848359	84E24C	8545EC	85AE37	861B2B	868CC7	870306	877DE5	87FD62	888176
890A20	899758	8A291C	8ABF65	8B5A2F	8BF973	8C9D2C	8D4554	8DF1E6	`EA2D9
8F5828	9011CC	90CFBF	9191F8	925871	932321	93F203	94C50C	959C36	967779
9756CB	983A25	99217D	9A0CCB	9AFC06	9BEF25	9CE61E	9DE0E8	9EDF7A	9FE1C9
A0E7CB	A1F177	A2FEC2	A40FA3	A5240E	A63BF9	A75759	A87623	A9984C	AABDCA
ABE690	AD1293	AE41C9	AF7424	B A99A	B1E21E	B31DA4	B45C21	B59D88	B6E1CC
B828E2	B972BC	BABF4D	BC0E8A	BD6065	BEB4D1	C00BC1	C16527	C2C0F7	C41F23
C57F9E	C6E25A	C84748	C9AE5D	CB1789	CC82BF	CDEFF1	CF5F10	D0D00F	D242DF
D3B773	D52DBB	D6A5A9	D81F2F	D99A3F	DB16C9	DC94BF	DE1412	DF94B3	E11695
E299A7	E41DDB	E5A321	E7296C	E8B0AB	EA38D1	EBC1CC	ED4B90	EED60B	F06130
F1ECEF	F37938	F505FC	F6932D	F820BA	F9AE95	FB3CAE	FCCAF5	FE595C	FFE7D3
01764A	0304B3	0492FD	06211A	07AEFB	093C8F	0AC9C8	0C5696	0DE2EA	0F6EB4
10F9E6	128470	140E43	159750	171F88	18A6DA	1A2D3A	1BB296	1D36E1	1EBA0B
203C06	21BCC2	233C31	24BA44	2636EC	27B21A	292BC0	2AA3D0	2C1A3B	2D8EF1
2F01E6	30730B	31E251	334FAA	34BB08	36245E	378B9C	38F0B7	3A539E	3BB446
3D12A0	3E6E9F	3FC835	411F55	4273F2	43C5FF	45156E	466233	47AC41	48F38B
4A3804	4B79A0	4CB853	4DF410	4F2CCB	506278	51950A	52C477	53F0B3	5519B1

~~12~~ 72

~~Appendix A~~
~~(28 Pages Total)~~

563F67	5761C8	5880CB	599C63	5AB485	5BC928	5CDA40	5DE7C2	5EF1A5	5FF7DD
60FA62	61F927	62F425	63EB51	64DEA1	65CE0D	66B98A	67A110	688495	696411
6A3F7C	6B16CB	6BE9F8	6CB8F9	6D83C7	6E4A5A	6F0CA9	6FCAAE	708460	7139B8
71EAB0	72973F	733F60	73E30A	748238	751CE2	75B303	764494	76D18E	7759EC
77DDA8	785CBA	78D71E	794CCD	79BDC1	7A29F3	7A915E	7AF3FA	7B51C0	7BAAA8
7BFEA9	7C4DBA	7C97CE	7CDCD7	7D1CC3	7D577A	7D8CDC	7DBCBB	7DE6D1	7E0AB1
7E279F	7E3C36	7E4570	7E3B05	7DFB0B	7EBC99	019EF0	02D66C	02B25A	02495B
021C52	02030C	01F2CC	01E76F	01DF07	01D88D	01D367	01CF36	01CBBA	01C8CA
01C645	01C418	01C230	01C081	01BF02	01BDAB	01BC77	01BB5F	01BA60	01B978
01B8A2	01B7DD	01B726	01B67D	01B5E0	01B54D	01B4C4	01B443	01B3C9	01B357
01B2EB	01B285	01B225	01B1C9	01B172	01B11F	01B0CF	01B084	01B03B	01AFF6
01AFB4	01AF74	01AF37	01AEFC	01AEC3	01AE8D	01AE58	01AE25	01ADF4	01ADC4
01AD96	01AD69	01AD3E	01AD14	01ACEB	01ACC4	01AC9D	01AC77	01AC53	01AC2F
01AC0C	01ABEB	01ABC9	01ABA9	01AB8A	01AB6B	01AB4C	01AB2F	01AB12	01AAF5
01AADA	01AABE	01AAA3	01AA89	01AA6F	01AA56	01AA3D	01AA24	01AA0C	01A9F4
01A9DD	01A9C5	01A9AF	01A998	01A982	01A96C	01A956	01A941	01A92C	01A917
01A903	01A8EE	01A8DA	01A8C6	01A8B2	01A89F	01A88B	01A878	01A865	01A852
01A83F	01A82C	01A81A	01A808	01A7F5	01A7E3	01A7D1	01A7BF	01A7AD	01A79C
01A78A	01A778	01A767	01A755	01A744	01A732	01A721	01A710	01A6FF	01A6ED
01A6DC	01A6CB	01A6BA	01A6A9	01A698	01A687	01A675	01A664	01A653	01A642
01A631	01A620	01A60E	01A5FD	01A5EC	01A5DA	01A5C9	01A5B7	01A5A6	01A594
01A582	01A570	01A55E	01A54C	01A53A	01A528	01A516	01A503	01A4F0	01A4DE
01A4CB	01A4B8	01A4A4	01A491	01A47E	01A46A	01A456	01A442	01A42D	01A419
01A404	01A3EF	01A3D9	01A3C4	01A3AE	01A398	01A381	01A36B	01A354	01A33C
01A324	01A30C	01A2F4	01A2DB	01A2C1	01A2A7	01A28D	01A272	01A257	01A23B
01A21F	01A202	01A1E5	01A1C6	01A1A8	01A188	01A168	01A147	01A125	01A102
01A0DF	01A0BA	01A095	01A06E	01A047	01A01E	019FF4	019FC9	019F9D	019F6F
019F3F	019F0E	019EDC	019EA7	019E71	019E38	019DFE	019DC1	019D81	019D3F
019CFA	019CB2	019C67	019C18	019BC6	019B6F	019B14	019AB4	019A4F	0199E3
019972	0198FA	01987A	0197F1	01975F	0196C3	01961C	019567	0194A4	0193D0
0192E9	0191EE	0190D9	018FA8	018E55	018CDB	018B32	018950	01872B	0184B0
0181CB	017E5E	017A3F	017531	016ED4	01668E	015B55	014B1B	01312D	00FFAD
00B574	3F2007	3E85D1	3E607D	3E8108	3E92EC	3E9E5A	3EA653	3EAC38	3EB0C3
3EB460	3EB751	3EB9C4	3EBBD5	3EBD9A	3EBF23	3EC07B	3EC1AA	3EC2B8	3EC3A9
3EC483	3EC548	3EC5FC	3EC6A0	3EC737	3EC7C2	3EC843	3EC8BB	3EC92A	3EC992
3EC9F3	3ECA4E	3ECAA4	3ECAF4	3ECB41	3ECB89	3ECBCD	3ECC0E	3ECC4C	3ECC87
3ECCBF	3ECCF4	3ECD27	3ECD58	3ECD87	3ECDB5	3ECDE0	3ECE0A	3ECE32	3ECE58
3ECE7E	3ECEA2	3ECEC5	3ECEE6	3ECF07	3ECF27	3ECF45	3ECF63	3ECF80	3ECF9C
3ECFB7	3ECFD2	3ECFEC	3ED005	3ED01E	3ED036	3ED04D	3ED064	3ED07B	3ED091
3ED0A6	3ED0BB	3ED0D0	3ED0E4	3ED0F7	3ED10B	3ED11E	3ED131	3ED143	3ED155
3ED167	3ED178	3ED189	3ED19A	3ED1AB	3ED1BB	3ED1CB	3ED1DB	3ED1EB	3ED1FB
3ED20A	3ED219	3ED228	3ED237	3ED246	3ED254	3ED262	3ED270	3ED27E	3ED28C
3ED29A	3ED2A8	3ED2B5	3ED2C3	3ED2D0	3ED2DD	3ED2EA	3ED2F8	3ED305	3ED311
3ED31E	3ED32B	3ED338	3ED344	3ED351	3ED35D	3ED36A	3ED376	3ED382	3ED38F
3ED39B	3ED3A7	3ED3B4	3ED3C0	3ED3CC	3ED3D8	3ED3E4	3ED3F1	3ED3FD	3ED409
3ED415	3ED421	3ED42D	3ED43A	3ED446	3ED452	3ED45E	3ED46B	3ED477	3ED483
3ED490	3ED49C	3ED4A9	3ED4B5	3ED4C2	3ED4CE	3ED4DB	3ED4E8	3ED4F5	3ED502
3ED50F	3ED51C	3ED529	3ED537	3ED544	3ED552	3ED55F	3ED56D	3ED57B	3ED589
3ED597	3ED5A5	3ED5B4	3ED5C3	3ED5D1	3ED5E0	3ED5EF	3ED5FF	3ED60E	3ED61E
3ED62E	3ED63E	3ED64F	3ED65F	3ED670	3ED681	3ED693	3ED6A5	3ED6B7	3ED6C9
3ED6DC	3ED6EF	3ED702	3ED716	3ED72A	3ED73F	3ED753	3ED769	3ED77F	3ED795
3ED7AC	3ED7C4	3ED7DC	3ED7F4	3ED80E	3ED828	3ED842	3ED85D	3ED87A	3ED897

~~13~~ 73

~~Appendix A~~

3ED8B4	3ED8D3	3ED8F3	3ED913	3ED935	3ED958	3ED97C	3ED9A1	3ED9C8	3ED9F0
3EDA1A	3EDA45	3EDA73	3EDAA2	3EDAD3	3EDB06	3EDB3C	3EDB74	3EDBAE	3EDBEC
3EDC2D	3EDC72	3EDCBA	3EDD06	3EDD57	3EDDAD	3EDE08	3EDE69	3EDED1	3EDF41
3EDFB8	3EE039	3EE0C5	3EE15C	3EE200	3EE2B4	3EE37A	3EE454	3EE546	3EE655
3EE785	3EE8DD	3EEA67	3EEC2D	3EEE40	3EF0B5	3EF3AA	3EF74A	3EFBDB	3F01C8
3F09CE	3F1551	3F2760	3F4852	3F9A58	3FA801	80E720	818CD3	81C4FB	81BA90
81C3CA	81D861	81F54F	82192F	824345	827324	82A886	82E33D	832329	836832
83B246	840157	845558	84AE40	850C06	856EA2	85D60D	86423F	86B333	8728E2
87A346	882258	88A614	892E72	89BB6C	8A4CFD	8AE31E	8B7DC8	8C1CF6	8CC0A0
8D68C1	8E1550	8EC648	8F7BA0	903552	90F357	91B5A6	927C39	934707	941608
94E935	95C084	969BEF	977B6B	985EF0	994676	9A31F3	9B215F	9C14AF	9D0BDB
9E06D9	9F059E	A00823	A10E5B	A2183E	A325C0	A436D8	A54B7B	A6639D	A77F35
A89E38	A9C099	AAE64F	AC0F4D	AD3B89	AE6AF6	AF9D88	B0D335	B20BF0	B347AD
B48660	B5C7FC	B70C75	B853BF	B99DCD	BAEA92	BC3A01	BD8C0E	BEE0AB	C037CB
C19161	C2ED60	C44BBA	C5AC62	C70F49	C87464	C9DBA2	CB44F8	CCB056	CE1DAF
CF8CF5	D0FE1A	D2710F	D3E5C5	D55C30	D6D440	D84DE6	D9C914	DB45BC	DCC3CF
DE433E	DFC3FA	E145F5	E2C91F	E44D6A	E5D2C6	E75926	E8E078	EA68B0	EBF1BD
ED7B90	EF061A	F0914C	F21D16	F3A96A	F53638	F6C371	F85105	F9DEE6	FB6D03
FCFB4D	FE89B6	00182D	01A6A4	03350B	04C352	06516B	07DF46	096CD3	0AFA04
0C86C8	0E1311	0F9ED0	1129F5	12B470	143E34	15C72F	174F55	18D694	1A5CDF
1BE225	1D6659	1EE96B	206B4D	21EBEE	236B41	24E937	2665C1	27E0D1	295A57
2AD245	2C488D	2DBD21	2F2FF1	30A0F0	32100F	337D41	34E877	3651A3	37B8B8
391DA6	3A8062	3BE0DD	3D3F09	3E9AD9	3FF43F	414B2F	429F9B	43F176	4540B3
468D44	47D71E	491E34	4A6278	4BA3DF	4CE25C	4E1DE2	4F5666	508BDC	51BE37
52ED6D	541970	554236	5667B4	5789DD	58A8A7	59C407	5ADBF2	5BF05D	5D013E
5E0E89	5F1835	601E37	612086	621F18	6319E2	6410DB	6503FA	65F335	66DE83
67C5DB	68A935	698887	6A63CA	6B3AF4	6C0DFD	6CDCDF	6DA78F	6E6E08	6F3041
6FEE34	70A7D8	715D27	720E1A	72BAAC	7362D4	74068D	74A5D1	75409B	75D6E4
7668A8	76F5E0	777E8A	78029E	78821B	78FCFA	797339	79E4D5	7A51C9	7ABA14
7B1DB4	7B7CA7	7BD6ED	7C2C84	7C7D6F	7CC9AF	7D1148	7D5441	7D92A3	7DCC7A
7E01D9	7E32DD	7E5FB0	7E8892	7EADF0	7ED082	7EF1A9	7F146B	7F410E	7F9979
7FA725	024C30	0252C7	02595C	025FE5	026656	026CBD	02731A	02796C	027FB5
0285F2	028C25	02924D	029869	029E7A	02A47F	02AA77	02B064	02B645	02BC19
02C1E0	02C79A	02CD46	02D2E6	02D877	02DDFB	02E371	02E8D9	02EE32	02F37D
02F8B9	02FDE6	030304	030813	030D12	031202	0316E1	031BB1	032070	03251F
0329BE	032E4C	0332C9	033735	033B8F	033FD9	034411	034837	034C4C	03504E
03543F	03581D	035BE9	035FA2	036349	0366DD	036A5E	036DCC	037126	03746E
0377A2	037AC2	037DCF	0380C8	0383AD	03867E	03893B	038BE3	038E77	0390F7
039362	0395B9	0397FA	039A27	039C3F	039E42	03A02F	03A208	03A3CB	03A578
03A710	03A893	03AA00	03AB57	03AC98	03ADC4	03AED9	03AFD9	03B0C3	03B196
03B253	03B2FA	03B38B	03B405	03B469	03B4B7	03B4EE	03B50E	03B518	03B50C
03B4E8	03B4AE	03B45E	03B3F6	03B378	03B2E3	03B238	03B175	03B09C	03AFAC
03AEA4	03AD87	03AC52	03AB06	03A9A3	03A82A	03A69A	03A4F2	03A334	03A15F
039F74	039D71	039B57	039927	0396E0	039482	03920E	038F83	038CE1	038A29
038759	038474	038178	037E65	037B3C	0377FD	0374A7	03713B	036DB9	036A21
036672	0362AE	035ED3	035AE3	0356DD	0352C1	034E90	034A48	0345EC	03417A
033CF2	033856	0333A4	032EDD	032A01	032510	03200B	031AF1	0315C2	03107F
030B27	0305BC	03003C	02FAA8	02F500	02EF45	02E976	02E393	02DD9E	02D794
02D178	02CB49	02C507	02BEB3	02B84C	02B1D2	02AB47	02A4A9	029DF9	029738
029065	028981	02828C	027B85	02746E	026D46	02660D	025EC4	02576B	025002
024889	024100	023969	0231C1	022A0B	022246	021A73	021291	020AA1	0202A3
01FA97	01F27D	01EA57	01E223	01D9E2	01D194	01C93B	01C0D5	01B863	01AFE5

~~14~~ 74

~~Appendix A~~
~~(28 Pages Total)~~

01A75C	019EC7	019628	018D7D	0184C8	017C09	017340	016A6D	016191	0158AB
014FBD	0146C5	013DC6	0134BE	012BAE	012296	011977	011051	010724	00FDF1
00F4B7	00EB77	00E232	00D8E7	00CF97	00C642	00BCE8	00B38B	00AA29	00A0C4
00975B	008DEF	008481	007B10	0072B5	007367	007419	0074CB	00757E	007632
0076E6	00779B	007850	007906	0079BC	007A73	3B67A0	3B5A73	3B4D49	3B4036
3B3355	3B2687	3B19CD	3B0D27	3B0097	3AF41C	3AE7B6	3ADB67	3ACF2E	3AC30D
3AB703	3AAB11	3A9F37	3A9377	3A87CF	3A7C41	3A70CD	3A6573	3A5A35	3A4F11
3A4409	3A391D	3A2E4E	3A239B	3A1906	3A0E8E	3A0433	39F9F7	39EFDA	39E5DC
39DBFD	39D23E	39C89E	39BF20	39B5C2	39AC84	39A369	399A6F	399197	3988E1
39804E	3977DE	396F92	396769	395F64	395783	394FC6	39482E	3940BC	39396E
393246	392B44	392468	391DB3	391724	3910BC	390A7B	390462	38FE70	38F8A6
38F304	38ED8B	38E83A	38E311	38DE12	38D93C	38D48F	38D00B	38CBB2	38C782
38C37D	38BFA2	38BBF1	38B86B	38B510	38B1DF	38AEDA	38AC00	38A952	38A6CF
38A478	38A24D	38A04E	389E7B	389CD4	389B5A	389A0C	3898EA	3897F6	38972E
389693	389624	3895E3	3895CF	3895E9	38962F	3896A3	389744	389813	38990F
389A39	389B91	389D16	389EC9	38A0A9	38A2B7	38A4F3	38A75D	38A9F4	38ACB9
38AFAC	38B2CD	38B61B	38B997	38BD41	38C119	38C51E	38C951	38CDB1	38D23F
38D6FB	38DBE4	38E0FA	38E63E	38EBAF	38F14D	38F718	38FD10	390336	390988
391006	3916B2	391D8A	39248E	392BBF	39331C	393AA4	394259	394A3A	395246
395A7E	3962E1	396B6F	397428	397D0D	39861B	398F55	3998B8	39A246	39ABFE
39B5DF	39BFEA	39CA1E	39D47C	39DF02	39E9B1	39F489	39FF88	3A0AB0	3A15FF
3A2176	3A2D14	3A38D9	3A44C5	3A50D7	3A5D0F	3A696E	3A75F1	3A829B	3A8F69
3A9C5B	3AA973	3AB6AE	3AC40D	3AD190	3ADF35	3AECFE	3AFAE9	3B08F6	3B1724
3B2574	3B33E6	3B4278	3B512A	3B5FFC	3B6EEE	3B7DFF	3B8D2F	3B9C7D	3BABE9
3BBB73	3BCB1A	3BDADE	3BEABF	3BFABB	3C0AD3	3C1B05	3C2B53	3C3BBB	3C4C3C
3C5CD7	3C6D8B	3C7E57	3C8F3B	3CA036	3CB149	3CC272	3CD3B1	3CE506	3CF66F
3D07ED	3D1980	3D2B25	3D3CDE	3D4EA9	3D6086	3D7275	3D8475	3D9685	3DA8A5
3DBAD4	3DCD12	3DDF5E	3DF1B8	3E041F	3E1692	3E2912	3E3B9D	3E4E33	3E60D3
3E737C	3E862F	3E98EB	3EABAE	3EBE78	3ED14A	3EE421	3EF6FE	3F09E0	3F1A96
3F1933	3F17CF	3F166A	3F1503	3F139C	3F1234	3F10CA	3F0F60	3F0DF4	3F0C87
3F0B19	84B61A	84C3DD	84D19D	84E5CB	850806	852EE5	855A67	858A88	85BF46
85F89B	863686	867903	86C00D	870BA1	875BBB	87B056	88096D	8866FE	88C902
892F74	899A51	8A0992	8A7D33	8AF52D	8B717D	8BF21B	8C7702	8D002C	8D8D93
8E1F31	8EB4FF	8F4EF8	8FED14	908F4D	91359B	91DFF9	928E5E	9340C5	93F724
94B176	956FB2	9631D1	96F7CB	97C198	988F30	99608B	9A35A2	9B0E6A	9BEADD
9CCAF2	9DAEA0	9E95DE	9F80A4	A06EE8	A160A2	A255C8	A34E52	A44A36	A5496A
A64BE6	A7519F	A85A8C	A966A4	AA75DC	AB882A	AC9D85	ADB5E3	AED138	AFEF7C
B110A4	B234A5	B35B75	B48509	B5B157	B6E055	B811F7	B94632	BA7CFC	BBB649
BCF210	BE3044	BF70DA	C0B3C8	C1F902	C3407C	C48A2B	C5D605	C723FC	C87406
C9C618	CB1A24	CC7021	CDC801	CF21B9	D07D3D	D1DA82	D3397B	D49A1C	D5FC59
D76026	D8C577	DA2C3F	DB9473	DCFE06	DE68EC	DFD518	E1427E	E2B111	E420C6
E5918F	E70360	E8762D	E9E9E8	EB5E86	ECD3F9	EE4A34	EFC12C	F138D3	F2B11D
F429FD	F5A365	F71D49	F8979D	FA1253	FB8D5F	FD08B2	FE8442	000000	017BE0
02F7D4	0473D0	05EFC7	076BAB	08E770	0A6308	0BDE67	0D5980	0ED445	104EA9
11C89F	13421B	14BB0F	16336E	17AB2B	192239	1A988B	1C0E14	1D82C7	1EF697
206976	21DB59	234C31	24BBF2	262A8E	2797FA	290427	2A6F0A	2BD895	2D40BA
2EA76F	300CA4	31704F	32D261	3432CE	35918A	36EE87	3849BA	39A315	3AFA8B
3C5011	3DA399	3EF517	404480	4191C5	42DCDB	4425B6	456C49	46B087	47F266
4931D8	4A6ED2	4BA948	4CE12C	4E1675	4F4915	507901	51A62D	52D08E	53F818
551CBE	563E77	575D36	5878F0	599199	5AA727	5BB98F	5CC8C5	5DD4BE	5EDD70
5FE2CF	60E4D2	61E36C	62DE95	63D641	64CA65	65BAF9	66A7F1	679143	6876E6
6958D0	6A36F6	6B1150	6BE7D3	6CBA76	6D8930	6E53F8	6F1AC4	6FDD8C	709C46

~~15~~ 75

~~Appendix A~~

7156EA	720D70	72BFCE	736DFD	7417F4	74BDAA	755F19	75FC38	769500	772968
77B96A	7844FE	78CC1D	794EC0	79CCE0	7A4677	7ABB7E	7B2BEE	7B97C1	7BFEF2
7C617A	7CBF54	7D1879	7D6CE5	7DB3D3	7DB05D	7DACE4	7DA969	7DA5EB	7DA26B
7D9EE8	7D9B63	7D97DB	7D9450	7D90C3	7D8D33	3E9013	3D98F9	3CA54A	3BB50F
3AC84B	39DF01	38F933	3816E1	37380B	365CAD	3584C4	34B04B	33DF3D	331194
324748	318052	30BCAA	2FFC46	2F3F1D	2E8525	2DCE55	2D1AA1	2C69FF	2BBC64
2B11C4	2A6A15	29C54A	292359	288435	27E7D3	274E27	26B726	2622C3	2590F4
2501AC	2474E0	23EA85	23628F	22DCF3	2259A6	21D89D	2159CD	20DD2B	2062AE
1FEA4A	1F73F5	1EFFA5	1E8D50	1E1CEC	1DAE70	1D41D3	1CD70A	1C6E0D	1C06D3
1BA153	1B3D84	1ADB5E	1A7AD9	1A1BEC	19BE8F	1962BB	190868	18AF8E	185827
18022A	17AD90	175A54	17086D	16B7D6	166888	161A7C	15CDAC	158213	1537AA
14EE6C	14A652	145F57	141976	13D4A9	1390EC	134E39	130C8A	12CBDC	128C29
124D6D	120FA3	11D2C7	1196D5	115BC7	11219A	10E84A	10AFD3	107831	104160
100B5C	0FD622	0FA1AF	0F6DFD	0F3B0C	0F08D6	82E067	84D038	86BA34	889E43
8A7C4F	8C5446	8E261A	8FF1BF	91B730	937666	952F5E	96E21A	988E9B	9A34E6
9BD500	9D6EF2	9F02C5	A09084	A2183A	A399F5	A515C3	A68BB4	A7FBD6	A9663C
AACAF5	AC2A14	AD83AC	AED7CE	B0268F	B17001	B2B438	B3F347	B52D43	B66240
B79251	B8BD8B	B9E402	BB05C9	BC22F5	BD3B99	BE4FC9	BF5F98	C06B1A	C17262
C27583	C37490	C46F9B	C566B7	C659F5	C74968	C83521	C91D32	CA01AC	CAE29F
CBC01C	CC9A33	CD70F5	CE4471	CF14B6	CFE1D5	D0ABDB	D172D8	D236DA	D2F7EF
D3B625	D4718A	D52A2A	D5E014	D69353	D743F5	D7F207	D89D93	D946A6	D9ED4B
DA918F	DB337C	DBD31C	DC707C	DD0BA5	DDA4A2	DE3B7C	DED03E	DF62F1	DFF39F
E08250	E10F0F	E199E4	E222D7	E2A9F2	E32F3C	E3B2BE	E4347F	E4B488	E532E0
E5AF8F	E62A9C	E6A40E	E71BEC	E7923E	E80709	7E026B	7C01FD	79FF3C	77FAA4
75F4AA	73EDBD	71E643	6FDE9E	6DD727	6BD034	69CA12	67C50D	65C167	63BF60
61BF34	5FC117	5DC53C	5BCBD2	59D502	57E0F4	55EFCB	5401A8	5216A7	502EE4
4E4A76	4C6974	4A8BF0	48B1FB	46DBA4	4508F8	433A04	416ECF	3FA763	3DE3C6
3C23FC	3A680B	38AFF5	36FBBA	354B5D	339EDD	31F638	30516D	2EB078	2D1356
2B7A04	29E47B	2852B8	26C4B4	253A69	23B3D1	2230E4	20B19A	1F35EE	1DBDD5
1C4948	1AD840	196AB2	180096	1699E3	153691	13D695	1279E7	11207C	0FCA4C
0E774D	0D2776	0BDABC	0A9116	094A7A	0806DF	06C63B	058885	044DB3	0315BB
01E094	00AE35	FF7E93	FE51A6	FD2765	FBFFC6	FADABF	F9B849	F8985A	F77AE9
F65FED	F5475D	F43131	F31D61	F20BE4	F0FCB0	EFEFBF	EEE508	EDDC83	ECD628
EBD1EE	EACFCF	E9CFC2	E8D1C0	E7D5C1	E6DBBE	C1F429	C3D8E6	C5AE8C	C77571
C92DEA	CAD84D	CC74F1	CE042B	CF8650	D0FBB4	D264AB	D3C188	D5129B	D65837
D792A8	D8C23F	D9E745	DB0208	DC12D0	DD19E4	DE178C	DF0C0C	DFF7A7	E0DA9F
E1B534	E287A4	E3522D	E41508	E4D070	E5849E	E631C7	E6D821	E777DF	E81133
E8A44F	E93161	E9B897	EA3A1E	EAB621	EB2CCB	EB9E43	EC0AB2	EC723D	ECD50A
ED333D	ED8CF8	EDE25E	EE338F	EE80AA	EEC9CF	EF0F1C	EF50AC	EF8E9D	EFC909
F0000B	F033BB	F06432	F09189	F0BBD6	F0E32F	F107AA	F1295D	F1485B	F164B7
F17E85	F195D8	F1AAC0	F1BD50	F1CD98	F1DBA7	F1E78E	F1F15C	F1F920	F1FEE6
F202BF	F204B5	F204D7	F20331	F1FFCF	F1FABC	F1F405	F1EBB3	F1E1D1	F1D66A
F1C987	F1BB33	F1AB76	F19A59	F187E6	F17424	F15F1B	F148D4	F13157	F118AA
F0FED4	F0E3DE	F0C7CD	F0AAA7	F08C74	F06D39	3C468F	3C2A34	3C0CF7	3BEEDD
3BCFE9	3BB01F	3B8F83	3B6E1A	3B4BE7	3B28F0	3B0537	3AE0C3	3ABB96	3A95B6
3A6F27	3A47EE	3A200F	39F78E	39CE71	39A4BC	397A74	394F9D	39243C	38F856
38CBF0	389F0D	3871B3	3843E6	3815AB	37E706	37B7FD	378893	3758CE	3728B1
36F841	36C782	36967A	36652B	36339B	3601CE	35CFC7	359D8C	356B1F	353886
3505C4	34D2DD	349FD5	346CAF	343970	34061B	33D2B3	339F3D	336BBB	333832
3304A4	32D115	329D87	3269FF	32367F	32030B	31CFA4	319C4F	31690D	3135E2
3102D0	30CFDB	309D03	306A4D	3037BA	30054D	2FD308	2FA0ED	2F6EFE	2F3D3E
2F0BAE	2EDA51	2EA928	2E7836	2E477B	2E16FB	2DE6B6	2DB6AE	2D86E4	2D575B

2D2813	2CF90F	2CCA4F	2C9BD4	2C6DA1	2C3FB6	2C1214	2BE4BC	2BB7B0	2B8AF1
2B5E7F	2B325B	2B0687	2ADB03	2AAFD0	2A84EF	877535	87B4DF	87FAE7	88473D
8899D0	88F290	89516C	89B651	8A212D	8A91EC	8B087A	8B84C2	8C06B0	8C8E2E
8D1B26	8DAD82	8E452A	8EE207	8F8402	902B02	90D6F0	9187B3	923D31	92F752
93B5FC	947915	954085	960C31	96DBFF	97AFD5	98879A	996332	9A4283	9B2574
9C0BEB	9CF5CC	9DE2FE	9ED367	9FC6ED	A0BD76	A1B6E8	A2B329	A3B221	A4B3B6
A5B7CF	A6BE52	A7C728	A8D238	A9DF69	AAEEA4	ABFFD1	AD12D8	AE27A2	AF3E19
B05625	B16FB1	B28AA5	B3A6EE	B4C475	B5E325	B702E9	B823AE	B9455E	BA67E7
BB8B35	BCAF34	BDD3D3	BEF8FE	C01EA4	C144B3	C26B1A	C391C8	C4B8AC	C5DFB6
C706D6	C82DFD	C9551B	CA7C21	CBA301	CCC9AD	CDF017	CF1631	D03BEE	D16141
D2861E	D3AA78	D4CE44	D5F176	D71402	D835DE	D956FF	DA775A	DB96E6	DCB599
DDD369	DEF04D	E00C3B	E1272C	E24117	E359F4	7FC243	7F7B9B	7F2C18	7ED3D0
7E72D7	7E0942	7D972A	7D1CA5	7C99CC	7C0EB9	7B7B86	7AE04E	7A3D2D	799240
78DFA4	782577	7763D7	769AE3	75CABD	74F382	741555	733056	7244A7	715269
7059C0	6F5ACC	6E55B2	6D4A94	6C3995	6B22D8	6A0682	68E4B5	67BD95	669147
655FED	6429AB	62EEA5	61AEFF	606ADB	5F225E	5DD5AB	5C84E4	5B302D	59D7A7
587B77	571BBD	55B89C	545235	52E8AA	517C1C	500CAB	4E9A78	4D25A3	4BAE4B
4A3490	48B890	473A6B	45BA3D	443825	42B440	412EAA	3FA781	3E1EDF	3C94E1
3B09A0	397D38	37EFC3	36615B	34D218	334212	31B163	302022	2E8E66	2CFC46
2B69D8	29D732	284469	26B193	251EC3	238C0D	21F986	206740	1ED54D	1D43C0
1BB2AB	1A221F	18922C	1702E3	157454	13E68F	1259A2	10CD9D	0F428D	0DB882
0C2F87	0AA7AB	0920FB	079B81	06174C	049466	C03926	C07214	C0AAC5	C0E336
C11B60	C15340	C18AD1	C1C210	C1F8F7	C22F83	C265B0	C29B7A	C2D0DD	C305D6
C33A60	C36E78	C3A21B	C3D546	C407F5	C43A25	C46BD3	C49CFD	C4CD9F	C4FDB7
C52D43	C55C40	C58AAB	C5B882	C5E5C4	C6126D	C63E7D	C669F2	C694C9	C6BF01
C6E899	C7118F	C739E2	C76190	C78899	C7AEFC	C7D4B7	C7F9CA	C81E33	C841F4
C86509	C88774	C8A934	C8CA49	C8EAB1	C90A6E	C9297F	C947E3	C9659C	C982A8
C99F09	C9BABE	C9D5C8	C9F027	CA09DC	CA22E7	CA3B48	CA5301	CA6A11	CA807A
CA963C	CAAB58	CABFCF	CAD3A1	CAE6D0	CAF95D	CB0B48	CB1C92	CB2D3D	CB3D4A
CB4CB9	CB5B8C	CB69C5	CB7763	CB8468	CB90D6	CB9CAE	CBA7F1	CBB2A1	CBBCBD
CBC649	CBCF45	CBD7B3	CBDF94	CBE6E9	CBEDB3	CBF3F5	CBF9AF	CBFEE2	CC0391
CC07BD	CC0B66	CC0E8F	CC1138	CC1364	CC1513	00A801	00A801	00A801	00A801
00A801	00A801	00A801	00A801	00A801	00A801	00A801	00C0F0	00DADC	00F5BA
01117D	012E1C	014B8E	0169CB	0188CC	01A88B	01C903	01EA2E	020C09	022E8E
0251BA	02758A	0299FB	02BF09	02E4B3	030AF5	0331CD	03593A	03813A	03A9CA
03D2E8	03FC95	0426CD	045191	047CDE	04A8B3	04D50F	0501F2	052F5A	055D47
058BB8	05BAAB	05EA21	061A18	064A91	067B89	06AD04	06DEF8	07116F	074463
0777D9	07ABC9	07E037	08151E	084A84	088067	08B6C3	08ED9E	0924F2	095CC0
09950C	09CDCD	0A070C	0A40C0	0A7AEE	0AB595	0AF0B7	0B2C52	0B6862	0BA4EC
0BE1EB	0C1F64	0C5D53	0C9BB7	0CDA94	0D19E3	0D59AB	0D99E5	0DDA98	0E1BBD
0E5D57	0E9F66	0EE1E7	0F24D9	0F6840	0FAC19	0FF063	103522	107A4E	10BFEC
1105F7	114C73	11935C	11DAB6	12227D	126AB1	12B34E	12FC59	1345D0	138FB0
13D9F9	1424AB	146FC6	14BB49	150731	15537E	15A030	15ED46	163ABD	168898
16D6D4	17256C	177464	17C3BD	181373	186380	18B3EA	1904AB	1955C5	19A737
19F8FD	1A4B16	1A9D80	1AF03D	1B434A	1B96A7	1BEA4B	1C3E3E	1C9279	1CE6FB
1D3BC5	1D90D6	1DE625	1E3BB4	1E9186	1EE792	1F3DD9	1F945B	1FEB14	204203
209924	20F078	2147FA	219FA5	21F77F	224F7F	22A7A4	22FFEF	23585C	23B0E2
240989	24624A	24BB1F	25140A	256D05	25C60D	261F25	267846	26D16C	272A95
2783BE	27DCE8	28360D	288F26	28E836	294135	299A24	29F2FE	2A4BBE	2AA461
2AFCE7	2B554C	2BAD8A	2C059F	2C5D85	2CB53D	2D0CBF	2D640A	2DBB1B	2E11ED
2E6877	2EBEBE	2F14BE	2F6A6A	2FBFC6	3014CF	30697B	30BDC7	3111B2	316538
31B856	320B03	325D3E	32AF04	330050	33511A	33A162	33F124	34405B	348F00

~~17~~ 77

~~Appendix A~~
~~(28 Pages Total)~~

34DD12	352A8D	35776C	35C3A8	360F3D	365A2D	36A46E	36EDFA	3736D2	377EED
37C64C	380CE5	3852B5	3897BB	38DBF0	391F4F	3961D4	39A37B	39E443	3A2420
3A6317	3AA11F	3ADE2F	3B1A4C	3B556D	3B8F8E	3BC8AC	3C00C1	3C37CA	3C6DC2
3CA2A9	3CD673	3D0924	3D3AB8	3D6B23	3D9A6B	3DC886	3DF573	3E2129	3E4BAD
3E74F7	3E9D02	3EC3CA	3EE953	3F0D91	3F3083	3F522A	3F727E	3F9182	3FAF29
3FCB79	3FE66D	90C2CE	90C2CE	90C2CE	90C2CE	90C2CE	90C2CE	90C2CE	90C2CE
90C2CE	90C2CE	90C2CE	91EF20	931394	943151	954928	965B96	97696E	987304
9978D5	9A7B35	9B7AA2	9C7747	9D714C	9E692F	9F5F1C	A05311	A14563	A23611
A3259A	A413D3	A50111	A5ED29	A6D86F	A7C30D	A8AD04	A99653	AA7F24	AB67A1
AC4FA0	AD3776	AE1F21	AF06A3	AFEDFA	B0D552	B1BCD3	B2A42B	B38BD6	B47382
B55B81	B643D4	B72C52	B81523	B8FE48	B9E7EA	BAD1E1	BBBC7F	BCA772	BD92E2
BE7EFA	BF6B90	C058BC	C14691	C23505	C32425	C413F5	C50479	C5F5B6	C6E7B4
C7DA73	C8CDF7	C9C244	CAB763	CBAD54	CCA41A	CD9BBB	CE9436	CF8D93	D087CF
D182F1	D27EFE	D37BF2	D479D1	D5789E	D67860	D77910	D87AB3	D97D4E	DA80DC
DB8566	DC8AE3	DD915C	DE98D0	DFA140	E0AAAC	E1B513	E2C076	E3CCD5	E4DA30
E5E88A	E6F7DB	E8082D	E91976	EA2BBB	EB3EF7	EC532E	ED685E	EE7E80	EF959A
F0ADA3	F1C6A4	F2E08F	F3FB6A	F51733	F633E3	F7517A	F86FF4	F98F54	FAAF91
FBD0AB	FCF29F	FE1569	FF3905	005D71	0182A8	02A8A7	03CF6A	04F6ED	061F2B
07481F	0871C9	099C20	0AC71D	0BF2BF	0D1F00	0E4BDC	0F794A	10A748	11D5CB
1304D1	143459	156452	1694BC	17C58F	18F6C2	1A2852	1B5A36	1C8C65	1DBEDB
1EF191	202479	215793	228ACE	23BE2B	24F19D	262518	27589B	288C15	29BF83
2AF2DC	2C260F	2D591D	2E8BF4	2FBE8C	30F0DC	3222D9	33547A	3485B6	35B67C
36E6C9	38168B	3945BB	3A744B	3BA22F	3CCF5F	3DFBCE	3F2770	40523F	417C1C
42A4FD	43CD0C	44F3CB	4619B9	473E57	4861D0	4983F9	4AA4D3	4BC487	4CE297
4DFF58	4F1A76	50341A	514C1B	52624E	5376DE	5489CA	559A95	56A9BD	57B6C3
58C1D3	59CAC1	5AD1B7	5BD639	5CD8C3	5DD8D8	5ED677	5FD1CC	60CAAC	61C0EC
62B48D	63A5B9	6493F3	657F63	66680A	674DE8	6830A9	691077	69ED29	6AC6BD
6B9D0A	6C703B	6D3FFB	6E0C4A	6ED552	6F9ABF	705CBC	711AF4	71D591	728C93
733FA7	73EEF6	749A56	7541C8	75E521	76848C	771FB4	77B6C3	7849BA	78D845
79628D	79E868	7A69D7	7AE6B0	7B5F1C	7BD2F2	7C4231	7CACB0	7D1299	7D7397
7DCFD5	7E2752	7E79E6	7EC765	7F0FF9	7F53A4	7F923A	7FCBBC	31DD2B	31DD2B
31DD2B	31DD2B	31DD2B	31DD2B	31DD2B	31DD2B	31DD2B	31DD2B	31DD2B	3114A9
3057DA	2FA594	2EFCDB	2E5CD5	2DC4CE	2D3426	2CAA58	2C26E9	2BA965	2B3177
2ABEC2	2A50FC	29E7DA	29831F	292296	28C600	286D2F	2817FC	27C637	2777BC
272C67	26E415	269EAA	265C03	261C11	25DEAD	25A3CA	256B4C	25351E	25012E
24CF68	249FBE	247219	24466F	241CB0	23F4CB	23CEB3	23AA5C	2387BE	2366C7
23476B	2329A6	230D6B	22F2B2	22D96F	22C198	22AB26	229614	22825A	226FEB
225EC4	224EDB	224031	2232BA	222670	221B4C	22114D	220868	22009B	21F9E4
21F438	21EF95	21EBF6	21E95B	21E7B8	21E710	21E758	21E892	21EABC	21EDCC
21F1BF	21F698	21FC50	2202E2	220A4E	22128C	221BA0	222585	223034	223BB0
2247F5	2254FC	2262C7	227154	2280A1	2290A8	22A16A	22B2E1	22C511	22D7F1
22EB85	22FFC5	2314B6	232A52	23409A	235786	236F1A	238751	23A02C	23B9A6
23D3C3	23EE7C	2409D0	2425C0	244246	245F63	247D18	249B63	24BA3D	24D9A9
24F9A5	251A2E	253B47	255CEA	257F17	25A1CB	25C509	25E8CD	260D13	2631DB
26572A	267CF2	26A340	26CA08	26F14A	271909	274142	2769F5	27931D	27BCBA
27E6C9	28114D	283C43	2867A9	28937D	28BFBE	28EC6C	291987	294706	2974EF
29A340	29D1F2	2A010C	2A3083	2A605F	2A909B	2AC133	2AF228	2B2379	2B5522
2B8723	2BB978	2BEC25	2C1F25	2C5276	2C861A	2CBA0A	2CEE4A	2D22D5	2D57A8
2D8CC5	2DC22B	2DF7D3	2E2DC3	2E63F1	2E9A5F	2ED10F	2F07F6	2F3F1C	2F767D
2FAE14	2FE5E2	301DE7	305619	308E7E	30C711	30FFD2	3138BD	3171D2	31AB11
31E471	321DF7	32579F	329168	32CB4B	33054F	333F68	33799E	33B3E5	33EE42
3428B3	346330	349DBF	34D85A	3512FD	354DA9	358859	35C30D	35FDC1	363876

~~Appendix A~~
~~(28 Pages Total)~~

36732A	36ADDA	36E87D	37231C	375DAF	379835	37D2AA	380D0F	38475E	388199
38BBBA	38F5C3	392FAD	39697B	39A327	39DCB1	3A1612	3A4F51	3A8861	3AC148
3AFA01	3B328B	3B6ADF	3BA301	3BDAEC	3C12A1	3C4A1B	3C8156	3CB852	3CEF0B
3D2585	3D5BB8	3D91A3	3DC743	3DFC98	3E31A1	3E665A	3E9ABF	3ECED5	3F0293
3F35F8	3F6905	3F9BB7	3FCE0C	04EA0A	04E8CE	04E8CE	04E765	04E737	04E761
04E7E3	04E8BC	04E9EB	04EB6F	04ED47	04EF72	04F1F1	04F4C2	04F7E4	04FB58
04FF1B	05032F	050792	050C43	051142	051690	051C2A	052211	052844	052EC3
05358E	053CA4	054404	054BAF	0553A5	055BE4	05646C	056D3E	057659	057FBD
05896A	05935F	059D9D	05A823	05B2F0	05BE06	05C964	05D50A	05E0F8	05ED2D
05F9AA	06066F	06137B	0620D0	062E6C	063C50	064A7D	0658F1	0667AE	0676B3
068601	069597	06A577	06B59F	06C611	06D6CC	06E7D2	06F921	070ABB	071CA0
072ECF	07414B	075411	076725	077A84	078E31	07A22B	07B673	07CB09	07DFEE
07F522	080AA6	08207B	0836A0	084D17	0863E1	087AFD	08926C	08AA2F	08C248
08DAB5	08F379	090C94	092606	F686D7	F69A2E	F6AC80	F6C2D1	F6D819	F6EE04
F7048F	F71BBB	F73384	F74BEB	F764ED	F77E89	F798BF	F7B38D	F7CEF2	F7EAEC
F8077C	F824A0	F84258	F860A2	F87F7D	F89EE9	F8BEE5	F8DF71	F9008C	F92235
F9446C	F96730	F98A81	F9AE5E	F9D2C7	F9F7BC	FA1D3D	FA4348	FA69DE	FA90FF
FAB8AA	FAE0E0	FB09A0	FB32EA	FB5CBE	FB871D	FBB206	FBDD79	FC0977	FC35FF
FC6312	FC90B1	FCBEDA	FCED90	FD1CD1	FD4C9E	FD7CF9	FDADE0	FDDF55	FE1158
FE43EA	FE770A	FEAABB	FEDEFC	FF13CE	FF4932	FF7F28	FFB5B2	FFECD0	002482
005CCA	0095A9	00CF20	01092F	0143D7	017F1A	01BAF9	01F775	02348E	027246
02B09F	02EF9A	032F37	036F78	03B05F	03F1ED	043424	047704	04BA8F	04FEC8
0543AF	058946	05CF8F	06168C	79CB59	7938F9	78A649	781347	777FF4	76EC51
76585D	75C417	752F82	749A9B	740563	736FD9	72D9FF	7243D2	71AD53	711682
707F5D	6FE7E6	6F501A	6EB7F9	6E1F84	6D86B9	6CED97	6C541E	6BBA4D	6B2024
6A85A1	69EAC4	694F8B	68B3F6	681804	677BB4	66DF05	6641F6	65A485	6506B1
64687A	63C9DF	632ADD	628B74	61EBA2	614B66	60AABF	6009AB	5F6829	5EC638
5E23D6	5D8101	5CDDB8	5C39F9	5B95C3	5AF114	5A4BEB	59A646	590022	58597F
57B25B	570AB3	566286	55B9D2	551096	5466CE	53BC7A	531197	526623	51BA1C
510D81	50604E	4FB282	4F041B	4E5516	4DA572	4CF52B	4C4440	4B92AE	4AE073
4A2D8C	4979F8	48C5B3	4810BB	475B0D	46A4A7	45ED87	4535A9	447D0B	43C3AA
430984	424E96	4192DC	40D654	C5D8D2	C65A28	C6DA6E	C759A7	C7D7D8	C85502
C8D12A	C94C53	C9C67E	CA3FB1	CAB7EC	CB2F35	CBA58C	CC1AF6	CC8F74	CD030A
CD75BA	CDE787	CE5873	CEC881	CF37B2	CFA60B	D0138D	D08039	D0EC13	D1571D
D1C159	D22AC9	D2936E	D2FB4C	D36263	D3C8B7	D42E48	D49319	D4F72B	D55A80
D5BD1B	D61EFC	D68025	D6E098	D74056	D79F61	D7FDBA	D85B64	D8B85E	D914AB
D9704B	D9CB41	DA258D	DA7F30	DAD82C	DB3082	DB8833	DBDF40	DC35AA	DC8B71
DCE097	DD351D	DD8904	DDDC4C	DE2EF6	DE8103	DED274	DF2349	DF7383	DFC322
E01227	E06093	E0AE66	E0FBA0	E14842	E1944D	E1DFC0	E22A9B	E274E0	E2BE8E
E307A5	E35026	E39810	E3DF65	E42622	E46C49	E4B1DA	E4F6D4	E53B37	E57F03
E5C237	E604D4	E646D9	E68846	256C44	256705	255B59	255D5F	2558F8	2554D9
255103	254D74	254A2D	25472E	254476	254207	253FE0	253E00	253C68	253B18
253A10	253950	2538D8	2538A7	2538BF	25391E	2539C5	253AB4	253BEB	253D6A
253F31	254140	254397	254636	25491D	254C4C	254FC3	255382	25578A	255BDA
256072	256553	256A7C	256FED	2575A7	257BAA	2581F5	258889	258F66	25968B
259DFA	25A5B1	25ADB1	25B5FB	25BE8E	25C769	25D08F	25D9FD	25E3B5	25EDB7
25F802	260297	260D76	26189E	262411	262FCE	263BD4	264825	2654C0	2661A6
266ED6	267C50	268A15	269825	26A680	26B525	26C415	26D351	26E2D7	26F2A9
2702C6	27132E	2723E1	2734E0	27462B	2757C1	2769A3	277BD0	278E49	27A10E
27B41F	27C77C	27DB25	27EF19	B5D25C	B5FD2B	B6376E	B65966	B68ACE	B6BE66
B6F42C	B72C20	B7663F	B7A289	B7E0FB	B82195	B86455	B8A93A	B8F042	B9396D
B984B9	B9D224	BA21AE	BA7356	BAC719	BB1CF8	BB74F1	BBCF02	BC2B2C	BC896B

~~19~~ 79

~~Appendix A~~
~~(28 Pages Total)~~

BCE9C1	BD4C2B	BDB0A8	BE1737	BE7FD8	BEEA8A	BF574A	BFC61A	C036F6	C0A9DF
C11ED4	C195D3	C20EDC	C289EE	C30708	C38628	C4074F	C48A7B	C50FAB	C596DE
C62014	C6AB4C	C73884	C7C7BD	C858F4	C8EC2A	C9815C	CA188B	CAB1B6	CB4CDB
CBE9FA	CC8911	CD2A20	CDCD26	CE7222	CF1914	CFC1F9	D06CD1	D1199B	D1C856
D27901	D32B9B	D3E023	D49697	D54EF7	D60942	D6C575	D78391	D84393	D9057B
D9C947	DA8EF6	DB5687	DC1FF7	DCEB46	DDB872	DE8779	DF585B	E02B14	E0FFA5
E1D60A	E2AE41	E3884B	E46423	7E11AD	7DD361	7D923A	7D4E3B	7D0764	7CBDB9
7C713A	7C21EB	7BCFCD	7B7AE2	7B232B	7AC8AC	7A6B64	7A0B57	79A887	7942F4
78DAA1	786F8E	7801BF	779135	771DF1	76A7F4	762F41	75B3D9	7535BD	74B4F0
743171	73AB44	732269	7296E3	7208B1	7177D6	70E453	704E2A	6FB55B	6F19E8
6E7BD3	6DDB1D	6D37C7	6C91D2	6BE93F	6B3E11	6A9048	69DFE5	692CEB	687759
67BF31	670475	664726	658744	64C4D2	63FFD1	633841	626E24	61A17C	60D249
60008D	5F2C4A	5E5580	5D7C31	5CA05E	5BC209	5AE132	59FDDD	591809	582FB8
5744EC	5657A7	5567E9	5475B5	53810C	5289F0	519062	509464	4F95F8	4E9520
4D91DD	4C8C32	4B8420	4A79A9	496CD0	485D96	474BFE	46380B	4521BD	440918
42EE1F	41D0D2	40B136	3F8F4D	C139B6	C155DA	C171EC	C18DEC	C1A9D9	C1C5B2
C1E178	C1FD2B	C218C8	C23452	C24FC6	C26B24	C2866D	C2A19F	C2BCBB	C2D7BF
C2F2AC	C30D81	C3283E	C342E2	C35D6E	C377DF	C39237	C3AC75	C3C697	C3E09F
C3FA8B	C4145C	C42E10	C447A7	C46122	C47A7E	C493BD	C4ACDD	C4C5DF	C4DEC1
C4F784	C51027	C528A9	C5410A	C5594A	C57168	C58963	C5A13C	C5B8F2	C5D084
C5E7F2	C5FF3B	C6165F	C62D5E	C64437	C65AE9	C67174	C687D8	C69E14	C6B427
C6CA11	C6DFD2	C6F569	C70AD5	C72017	C7352C	C74A16	C75ED3	C77363	C787C4
C79BF8	C7AFFD	C7C3D2	C7D777	C7EAEB	C7FE2E	C81140	C8241F	C836CB	C84943
C85B87	C86D96	C87F6F	C89112	C8A27F	C8B3B4	C8C4B0	C8D574	C8E5FE	C8F64E
C90664	C9163D	C925DB	C9353B	000000	FCDBD5	F9B827	F69570	F3742D	F054D9
ED37F0	EA1DEC	E70748	E3F47E	E0E607	DDDC5B	DAD7F4	D7D947	D4E0CB	D1EEF6
CF043B	CC210D	C945E0	C67323	C3A946	C0E8B6	BE31E2	BB8533	B8E313	B64BEB
B3C020	B14017	AECC33	AC64D5	AA0A5B	A7BD23	A57D86	A34BDF	A12883	9F13C8
9D0DFE	9B1777	99307F	975961	959267	93DBD7	9235F3	90A0FD	8F1D34	8DAAD3
8C4A14	8AFB2D	89BE51	8893B1	877B7C	8675DC	8582FB	84A2FC	83D604	831C31
8275A1	81E26C	8162AA	80F66E	809DC9	8058C9	802778	8009DE	800000	8009DE
802778	8058C9	809DC9	80F66E	8162AA	81E26C	8275A1	831C31	83D604	84A2FC
8582FB	8675DC	877B7C	8893B1	89BE51	8AFB2D	8C4A14	8DAAD3	8F1D34	90A0FD
9235F3	93DBD7	959267	975961	99307F	9B1777	9D0DFE	9F13C8	A12883	A34BDF
A57D86	A7BD23	AA0A5B	AC64D5	AECC33	B14017	B3C020	B64BEB	B8E313	BB8533
BE31E2	C0E8B6	C3A946	C67323	C945E0	CC210D	CF043B	D1EEF6	D4E0CB	D7D947
DAD7F4	DDDC5B	E0E607	E3F47E	E70748	EA1DEC	ED37F0	F054D9	F3742D	F69570
F9B827	FCDBD5	800000	8009DE	802778	8058C9	809DC9	80F66E	8162AA	81E26C
8275A1	831C31	83D604	84A2FC	8582FB	8675DC	877B7C	8893B1	89BE51	8AFB2D
8C4A14	8DAAD3	8F1D34	90A0FD	9235F3	93DBD7	959267	975961	99307F	9B1777
9D0DFE	9F13C8	A12883	A34BDF	A57D86	A7BD23	AA0A5B	AC64D5	AECC33	B14017
B3C020	B64BEB	B8E313	BB8533	BE31E2	C0E8B6	C3A946	C67323	C945E0	CC210D
CF043B	D1EEF6	D4E0CB	D7D947	DAD7F4	DDDC5B	E0E607	E3F47E	E70748	EA1DEC
ED37F0	F054D9	F3742D	F69570	F9B827	FCDBD5	000000	03242B	0647D9	096A90
0C8BD3	0FAB27	12C810	15E214	18F8B8	1C0B82	1F19F9	2223A5	25280C	2826B9
2B1F35	2E110A	30FBC5	33DEF3	36BA20	398CDD	3C56BA	3F174A	41CE1E	447ACD
471CED	49B415	4C3FE0	4EBFE9	5133CD	539B2B	55F5A5	5842DD	5A827A	5CB421
5ED77D	60EC38	62F202	64E889	66CF81	68A69F	6A6D99	6C2429	6DCA0D	6F5F03
70E2CC	72552D	73B5EC	7504D3	7641AF	776C4F	788484	798A24	7A7D05	7B5D04
7C29FC	7CE3CF	7D8A5F	7E1D94	7E9D56	7F0992	7F6237	7FA737	7FD888	7FF622
000000	FE6DE3	FCDBD5	FB49E7	F9B827	F826A4	F69570	F50498	F3742D	F1E43D
F054D9	EEC60F	ED37F0	EBAA89	EA1DEC	E89226	E70748	E57D60	E3F47E	E26CB0

E0E607	DF6090	DDDC5B	DC5978	DAD7F4	D957DE	D7D947	D65C3B	D4E0CB	D36704
D1EEF6	D078AE	CF043B	CD91AB	CC210D	CAB270	C945E0	C7DB6C	C67323	C50D11
C3A946	C247CD	C0E8B6	BF8C0E	BE31E2	BCDA3F	BB8533	BA32CA	B8E313	B7961A
B64BEB	B50493	B3C020	B27E9D	B14017	B0049B	AECC33	AD96EE	AC64D5	AB35F6
AA0A5B	A8E211	A7BD23	A69B9B	A57D86	A462EF	A34BDF	A23863	A12883	A01C4C
9F13C8	9E0F00	9D0DFE	9C10CD	9B1777	9A2204	99307F	9842F0	975961	9673DC
959267	94B50E	93DBD7	9306CB	9235F3	916956	90A0FD	8FDCEF	8F1D34	8E61D3
8DAAD3	8CF83C	8C4A14	8BA062	8AFB2D	8A5A7A	89BE51	8926B6	8893B1	880546
877B7C	86F657	8675DC	85FA11	8582FB	85109D	84A2FC	843A1D	83D604	8376B4
831C31	82C67F	8275A1	822999	81E26C	81A01B	8162AA	812A1A	80F66E	80C7A8
809DC9	8078D4	8058C9	803DAA	802778	801634	8009DE	800278	800000	800278
8009DE	801634	802778	803DAA	8058C9	8078D4	809DC9	80C7A8	80F66E	812A1A
8162AA	81A01B	81E26C	822999	8275A1	82C67F	831C31	8376B4	83D604	843A1D
84A2FC	85109D	8582FB	85FA11	8675DC	86F657	877B7C	880546	8893B1	8926B6
89BE51	8A5A7A	8AFB2D	8BA062	8C4A14	8CF83C	8DAAD3	8E61D3	8F1D34	8FDCEF
90A0FD	916956	9235F3	9306CB	93DBD7	94B50E	959267	9673DC	975961	9842F0
99307F	9A2204	9B1777	9C10CD	9D0DFE	9E0F00	9F13C8	A01C4C	A12883	A23863
A34BDF	A462EF	A57D86	A69B9B	A7BD23	A8E211	AA0A5B	AB35F6	AC64D5	AD96EE
AECC33	B0049B	B14017	B27E9D	B3C020	B50493	B64BEB	B7961A	B8E313	BA32CA
BB8533	BCDA3F	BE31E2	BF8C0E	C0E8B6	C247CD	C3A946	C50D11	C67323	C7DB6C
C945E0	CAB270	CC210D	CD91AB	CF043B	D078AE	D1EEF6	D36704	D4E0CB	D65C3B
D7D947	D957DE	DAD7F4	DC5978	DDDC5B	DF6090	E0E607	E26CB0	E3F47E	E57D60
E70748	E89226	EA1DEC	EBAA89	ED37F0	EEC60F	F054D9	F1E43D	F3742D	F50498
F69570	F826A4	F9B827	FB49E7	FCDBD5	FE6DE3	000080	000095	0000AA	0000BC
0000CB	0000D6	0000DE	0000E0	0000DE	0000D6	0000CB	0000BC	0000AA	000095
000080	00006B	000056	000044	000035	00002A	000022	000020	000022	00002A
000035	000044	000056	00006B	000080	000086	00008B	000091	000096	00009B
0000A0	0000A4	0000A8	0000AB	0000AE	0000B0	0000B2	0000B3	0000B3	0000B3
0000B2	0000B0	0000AE	0000AB	0000A8	0000A4	0000A0	00009B	000096	000091
00008B	000086	000080	00007A	000075	00006F	00006A	000065	000060	00005C
000058	000055	000052	000050	00004E	00004D	00004D	00004D	00004E	000050
000052	000055	000058	00005C	000060	000065	00006A	00006F	000075	00007A
000080	000088	000090	000097	00009E	0000A4	0000A9	0000AE	0000B1	0000B3
0000B3	0000B3	0000B1	0000AE	0000A9	0000A4	00009E	000097	000090	000088
000080	000078	000070	000069	000062	00005C	000057	000052	00004F	00004D
00004D	00004D	00004F	000052	000057	00005C	000062	000069	000070	000078
000080	00008B	000096	0000A0	0000A8	0000AE	0000B2	0000B3	0000B2	0000AE
0000A8	0000A0	000096	00008B	000080	000075	00006A	000060	000058	000052
00004E	00004D	00004E	000052	000058	000060	00006A	000075	000080	00008D
00009A	0000A3	0000A9	0000AC	0000A9	0000A3	00009A	00008D	000080	000073
000066	00005D	000057	000054	000057	00005D	000066	000073	000080	0000CB
0000DE	0000AA	000056	000022	000035	000A3D	000A3F	000A42	000A48	000A50
000A5A	000A66	000A75	000A86	000A99	000AAF	000AC7	000AE1	000AFD	000B1B
000B3C	000B5F	000B84	000BAC	000BD5	000C01	000C2F	000C5F	000C92	000CC6
000CFD	000D36	000D71	000DAF	000DEE	000E2F	000E73	000EB9	000F01	000F4B
000F97	000FE5	001035	001087	0010DB	001131	001189	0011E4	001240	00129E
0012FE	001360	0013C4	00142A	001491	0014FB	001566	0015D4	001643	0016B4
001726	00179B	001811	001889	001903	00197E	0019FB	001A7A	001AFA	001B7C
001C00	001C85	001D0C	001D94	001E1E	001EA9	001F36	001FC4	002054	0020E5
002178	00220C	0022A1	002337	0023CF	002468	002503	00259F	00263B	0026DA
002779	002819	0028BB	00295D	002A01	002AA6	002B4B	002BF2	002C9A	002D42
002DEC	002E96	002F42	002FEE	00309B	003149	0031F7	0032A7	003356	003407

0034B9	00356A	00361D	0036D0	003784	003838	0038ED	0039A2	003A58	003B0E
003BC4	003C7B	003D32	003DEA	003EA1	003F59	004011	0040CA	004182	00423B
0042F4	0043AD	004466	00451F	0045D8	004691	00474A	004802	0048BB	004974
004A2C	004AE4	004B9C	004C54	004D0B	004DC2	004E79	004F30	004FE6	00509B
005151	005205	0052BA	00536D	005420	0054D3	005585	005636	0056E7	005797
005846	0058F5	0059A3	005A50	005AFC	005BA7	005C51	005CFB	005DA4	005E4B
005EF2	005F98	00603D	0060E0	006183	006224	0062C5	006364	006402	00649F
00653B	0065D5	00666E	006706	00679D	006832	0068C6	006958	0069E9	006A79
006B07	006B94	006C1F	006CA9	006D32	006DB8	006E3E	006EC1	006F43	006FC3
007042	0070BF	00713B	0071B4	00722C	0072A3	007317	00738A	0073FB	00746A
0074D7	007542	0075AC	007614	00767A	0076DD	00773F	0077A0	0077FE	00785A
0078B4	00790C	007962	0079B7	007A09	007A59	007AA7	007AF3	007B3D	007B85
007BCA	007C0E	007C4F	007C8F	007CCC	007D07	007D40	007D77	007DAC	007DDE
007E0E	007E3C	007E68	007E92	007EB9	007EDE	007F01	007F22	007F41	007F5D
007F77	007F8F	007FA4	007FB7	007FC8	007FD7	007FE4	007FEE	007FF6	007FFB
007FFF	008000	007FFF	007FFB	007FF6	007FEE	007FE4	007FD7	007FC8	007FB7
007FA4	007F8F	007F77	007F5D	007F41	007F22	007F01	007EDE	007EB9	007E92
007E68	007E3C	007E0E	007DDE	007DAC	007D77	007D40	007D07	007CCC	007C8F
007C4F	007C0E	007BCA	007B85	007B3D	007AF3	007AA7	007A59	007A09	0079B7
007962	00790C	0078B4	00785A	0077FE	0077A0	00773F	0076DD	00767A	007614
0075AC	007542	0074D7	00746A	0073FB	00738A	007317	0072A3	00722C	0071B4
00713B	0070BF	007042	006FC3	006F43	006EC1	006E3E	006DB8	006D32	006CA9
006C1F	006B94	006B07	006A79	0069E9	006958	0068C6	006832	00679D	006706
00666E	0065D5	00653B	00649F	006402	006364	0062C5	006224	006183	0060E0
00603D	005F98	005EF2	005E4B	005DA4	005CFB	005C51	005BA7	005AFC	005A50
0059A3	0058F5	005846	005797	0056E7	005636	005585	0054D3	005420	00536D
0052BA	005205	005151	00509B	004FE6	004F30	004E79	004DC2	004D0B	004C54
004B9C	004AE4	004A2C	004974	0048BB	004802	00474A	004691	0045D8	00451F
004466	0043AD	0042F4	00423B	004182	0040CA	004011	003F59	003EA1	003DEA
003D32	003C7B	003BC4	003B0E	003A58	0039A2	0038ED	003838	003784	0036D0
00361D	00356A	0034B9	003407	003356	0032A7	0031F7	003149	00309B	002FEE
002F42	002E96	002DEC	002D42	002C9A	002BF2	002B4B	002AA6	002A01	00295D
0028BB	002819	002779	0026DA	00263B	00259F	002503	002468	0023CF	002337
0022A1	00220C	002178	0020E5	002054	001FC4	001F36	001EA9	001E1E	001D94
001D0C	001C85	001C00	001B7C	001AFA	001A7A	0019FB	00197E	001903	001889
001811	00179B	001726	0016B4	001643	0015D4	001566	0014FB	001491	00142A
0013C4	001360	0012FE	00129E	001240	0011E4	001189	001131	0010DB	001087
001035	000FE5	000F97	000F4B	000F01	000EB9	000E73	000E2F	000DEE	000DAF
000D71	000D36	000CFD	000CC6	000C92	000C5F	000C2F	000C01	000BD5	000BAC
000B84	000B5F	000B3C	000B1B	000AFD	000AE1	000AC7	000AAF	000A99	000A86
000A75	000A66	000A5A	000A50	000A48	000A42	000A3F	FFFFFE	FFFFDF	BFFFFF
002000	3EAC38	000000	2F8810	003000	3DB09A	000000	3B9CD2	000000	2B9DFA
000000	2DB8DA	002000	2F8DB2	000000	2F8DFA	000000	3D98DA	000000	379C38
000000	200C38	0142D2	016444	000398	006DFA	000200	000378	0003D0	E00000
754317	000001	000000	CD0090	000000	C00000	F54283	000001	000000	C5408D
000001	600000	CD068F	000001	000000	B54084	000001	ECF015	200D79	45B090
200C78	0003E8	000064	00000A	00B000	003000	009000	00B000	003000	00A000
00A000	00B000	00B000	00B000	00B000	002000	008000	003000	008000	008000
000052	000000	00001A	00000A	000048	00004A	00005A	000000	00005A	00004A
000058	00005A	000052	00001A	00005A	000058	3005A0	000180	300920	1009A0
000D80	100CA0	300CA0	0001A0	300DA0	100DA0	200DA0	300C80	300420	300980
300C20	200C20	07B000	009000	0B3000	0AB000	0C9000	0EA000	0FA000	00B000

~~22~~ 82

~~Appendix A~~
~~(28 Pages Total)~~

0FB000	0EB000	0DB000	0F8000	072000	0B9000	0F2000	0D2000	A00000	200000
C00000	600000	600000	600000	E00000	200000	E00000	600000	E00000	E00000
800000	E00000	C00000	C00000	000702	000100	000700	000700	000102	000602
000602	000300	000702	000702	000302	000402	000602	000500	000602	000202
40009D	00000C	000099	00001D	40000C	400015	400095	00000D	40009D	40001D
40008D	400094	400091	00009C	400091	400081	000000	000000	000001	000001
000001	000001	000001	000000	000001	000001	000001	000001	000000	000001
000001	000001	B54000	300000	994000	B84000	3C0000	AC4000	AD4000	B00000
BD4000	BC4000	BD0000	2D4000	854000	394000	8D4000	8D0000	0001F8	000030
0002E8	0002B8	000330	000398	0003D8	000038	0003F8	0003B8	000378	0003D0
0002C0	0002F0	0003C8	000348	014C06	000404	006C02	002C06	012404	012806
016806	000C04	016C06	012C06	016C04	016006	006002	006406	016802	016800
00068E	00068E	00099A	000E06	001483	001DFC	002BE0	004029	005DD9	008944
00C8CD	0125B3	01AD8E	027454	039703	05402D	07AE14	0020C5	002EBA	00461B
006688	0095FB	00DB59	0140CC	01D53D	02AE64	03EC03	05BC56	0863F1	0C4578
11F30E	1A410B	266666	047AE1	051EB8	05C28F	066666	070A3D	07AE14	0851EC
08F5C3	09999A	0A3D71	0B851F	0CCCCD	19999A	266666	333333	400000	0020C5
002EBA	00461B	006688	0095FB	00DB59	0140CC	01D53D	02AE64	03EC03	05BC56
0863F1	0C4578	1090D6	165D3A	1E3151	047AE1	051EB8	05C28F	066666	070A3D
07AE14	0851EC	08F5C3	09999A	0A3D71	0B851F	0CCCCD	133333	19999A	266666
333333	000200	000417	000700	000EEF	001E00	0036C5	006D8A	00CC6B	0198D6
041183	082306	1CCE80	11F601	0C4578	0863F1	05BC56	03EC03	02AE29	01D53D
00A3D7	004189	0020C5	001062	000347	0C4578	0863F1	05BC56	03EC03	02AE29
01D53D	00A3D7	004189	0020C5	001062	000347	0001A3	0863F1	05BC56	03EC03
02AE29	01D53D	00C49C	008312	004189	0020C5	001062	000347	0001A3	05BC56
03EC03	02AE29	01D53D	0147AE	00C49C	008312	004189	0020C5	001062	000347
0001A3	05BC56	03EC03	02AE29	01D53D	00C49C	008312	004189	0020C5	001062
000347	0001A3	000054	000002	000004	000008	00000A	00000F	000014	000019
00001E	000028	000032	00004B	000064	000004	000008	00000C	00000F	000014
00001E	000032	000032	000032	000064	0000C8	0000C8	000008	00000F	000014
000019	00001E	000032	000032	000032	000064	0000C8	0000C8	0000C8	00000F
000014	000019	00001E	000032	000032	000032	000064	0000C8	0000C8	0000C8
0001F4	000014	000019	00001E	000032	000032	000032	000064	0000C8	0000C8
0000C8	0000C8	0001F4	0863F1	05BC56	03EC03	02AE29	01D53D	00C49C	008312
004189	0020C5	0020C5	0020C5	0020C5	000000	000008	000015	000033	00007F
0CCCCD	19999A	2020C5	2872B0	32F1AA	4020C5	50C49C	558106	5A9FBE	600000
65A1CB	6A7EFA	6CED91	6F7CEE	720C4A	7374BC	74BC6A	7624DD	776C8B	78D4FE
7A3D71	7BA5E3	7D0E56	7E978D	7FDF3B	7FDF3B	7FDF3B	7FDF3B	7FDF3B	000002
000002	000002	000002	000003	000002	000002	000002	000000	000003	000003
000003	000001	000003	000003	000003	000001	000002	000002	000002	000002
000002	000002	000002	000000	000002	000002	000002	000000	000002	000002
000002	000000	000003	000000	000002	000000	000003	000000	000002	000000
000000	000000	000000	000000	000000	000000	000000	000000	000140	000150
000003	000006	00000C	000018	000030	000060	0000C0	000180	00057D	0002BE
00015F	0000AF	000057	00002D	000016	00000A	612900	052A21	05F421	FFFFFF
61B800	000000	08D9F4	613800	61B900	000000	045911	05AA21	613900	0A39AF
002E60	0AB00C	61A900	000004	442800	084431	44A800	632600	052723	63BA00
051FA3	000000	085BF4	05A723	633A00	63A600	000004	0A2DCE	002E79	0A1EEE
002E7E	0A1EED	002E7A	0A24F7	002E79	0A1E6E	0A1E6D	00000C	0A24F7	002E79
0A1E6E	00000C	0A1E6D	00000C	5EAA00	200003	0AF0A2	002ECE	0A2DCE	002ECE
0B206C	0AF0A0	002ECE	56B600	44B500	44F444	001000	0AF0A3	002E90	200040
44F400	00019D	44F445	000143	0AF0A7	002E99	200045	0AF0A7	002EBA	0BF080

~~23~~ 83

~~Appendix A~~
~~(28 Pages Total)~~

```
001081 0D09BA 60F400 002C55 5EAC00 07D884 5FAD42 07E084 5C2C4A 5D2D00
0D0CD6 0A1E70 0ABF0D 061480 002EB4 0A2056 0AF0A0 002EA9 46F400 000320
4E3500 46F400 FFFE0C 4E3600 0D089E 0A2B14 0BA407 000000 0ABF2D 0D09BA
0AF080 002ECA 0A1EE4 002EC3 0A2065 0AF0A0 002EC8 0A20E4 002ECA 0AF080
002EC8 0A2066 0AF0A0 002EC8 0A20E4 002ECA 0A206B 0A206A 0A2044 44F400
FFCDA6 4C2A00 00000C 0A20CB 002F01 0A34EF 002F01 0A204A 0AF0A8 002EE1
0A2049 0AF0A8 002EE7 0A2048 0AF0A8 002EED 0A2047 0AF0A8 002EF3 0A204B
00000C 0A2069 60F400 00298A 383700 0AF080 002EF6 0A2068 60F400 0029C2
382700 0AF080 002EF6 0A2067 60F400 0029EA 381B00 0AF080 002EF6 60F400
002A06 381300 61F400 000340 693300 703700 063880 002EFD 07D884 445900
46F400 FFEF98 4E3400 00000C 000005 000003 000002 000002 000001 000001
000001 000001 61F400 002F02 60F400 000221 060880 002F14 07D98A 49E000
06CA20 20003A 495800 61F400 000219 51F400 7FFFFF 0605A0 595900 0A3407
0A3408 0A3409 0A340A 0A3490 0031AD 44B000 56F400 000023 56F445 00001E
0AF0A9 002F35 56F445 000019 0AF0A9 002F36 56F445 000014 0AF0A9 002F37
200045 0AF0A9 002F38 0AF080 002F39 0A342A 0A3429 0A3428 0A3427 45F400
63D70A 45F4A1 000010 219C65 0AF0A9 0031AD 60F413 000221 340000 320000
06DC00 002F48 49D800 205C05 038402 627000 000219 224400 320000 60F413
000221 340100 46F400 000002 06DC00 002F71 000000 228F00 20004C 20002E
20005D 0AF0A7 002F6E 0AF0A2 002F6B 487000 000FFE 49D000 48D800 48F005
000FFE 0AF0A1 002F6B 56D800 48D000 48F005 000FFE 0AF0A9 002F6E 20581B
0AF080 002F71 49D800 200005 038402 045C14 627000 00021A 224500 320000
60F413 000221 340100 06DC00 002FAE 000000 228F00 20004C 20002E 20005D
0AF0A9 002FA8 0AF0A7 002F92 487000 000FFE 49D000 48D800 48F005 000FFE
0AF0A1 002FA8 56D800 48D000 48F005 000FFE 0AF0A1 002FA8 228F00 20006C
20002E 20005D 0AF0A7 002FAB 0AF0A9 002FA8 487000 000FFE 49D000 48D800
48F005 000FFE 0AF0A1 002FA8 56D800 48D000 48F005 000FFE 0AF0A9 002FAB
20581B 0AF080 002FAE 49D800 200005 038402 045C14 627000 00021B 224700
320000 60F413 000221 340100 06DC00 003001 000000 228F00 20004C 20002E
20005D 0AF0A9 002FFB 0AF0A7 002FCF 487000 000FFE 49D000 48D800 48F005
000FFE 0AF0A1 002FFB 56D800 48D000 48F005 000FFE 0AF0A1 002FFB 228F00
20006C 20002E 20005D 0AF0A7 002FE5 0AF0A9 002FFB 487000 000FFE 49D000
48D800 48F005 000FFE 0AF0A1 002FFB 56D800 48D000 48F005 000FFE 0AF0A1
002FFB 228F00 20007C 20002E 20005D 0AF0A7 002FFE 0AF0A9 002FFB 487000
000FFE 49D000 48D800 48F005 000FFE 0AF0A1 002FFB 56D800 48D000 48F005
000FFE 0AF0A9 002FFE 20581B 0AF080 003001 49D800 200005 038402 045C14
627000 00021C 320000 60F413 000221 340100 06DC00 00306D 000000 228F00
20004C 20002E 20005D 0AF0A9 003067 0AF0A7 003021 487000 000FFE 49D000
48D800 48F005 000FFE 0AF0A1 003067 56D800 48D000 48F005 000FFE 0AF0A1
003067 228F00 20006C 20002E 20005D 0AF0A7 003037 0AF0A9 003067 487000
000FFE 49D000 48D800 48F005 000FFE 0AF0A1 003067 56D800 48D000 48F005
000FFE 0AF0A1 003067 228F00 47F000 00021B 20007C 20002E 20005D 0AF0A7
00304F 0AF0A9 003067 487000 000FFE 49D000 48D800 48F005 000FFE 0AF0A1
003067 56D800 48D000 48F005 000FFE 0AF0A1 003067 228F00 47F000 00021C
20007C 20002E 20005D 0AF0A7 00306A 0AF0A9 003067 487000 000FFE 49D000
48D800 48F005 000FFE 0AF0A1 003067 56D800 48D000 48F005 000FFE 0AF0A9
00306A 20581B 0AF080 00306D 49D800 200005 038402 045C14 627000 00021D
60F413 00021F 61F400 000209 391000 060580 003080 70E900 000000 044810
000000 48D800 49D800 48E018 60F418 00021F 495900 61F400 000219 71F400
FFFFE7 56D900 44F41B 00000D 45F445 00000C 029040 60F464 000220 219800
219400 044810 46F400 000001 060A80 0030CC 56F000 000219 228400 200044
45F426 000002 200055 0AF0AF 0030C0 56F065 00021A 0AF0AA 0030C4 0A3487
```


~~Appendix A~~
~~(28 Pages Total)~~

```
0030CB 200044 200026 56F055 00021B 0AF0AF 0030C0 0A3488 0030CB 200044
200026 56F055 00021C 0AF0AF 0030C0 0A3489 0030CB 200044 200026 56F055
00021D 0AF0AF 0030C0 0A348A 0030CB 200044 200026 200055 0AF0A7 0030CB
045C14 045810 0AF080 003094 56F000 000219 200065 0AF0A7 0030CB 48E000
200018 48D800 205C18 496900 3C0500 0A34AA 0030DB 3C0400 0A34A9 0030DB
3C0300 0A34A8 0030DB 3C0200 0A34A7 0030DB 3C0100 060480 00311A 56D900
44F41B 000010 45F445 00000C 029040 60F464 000220 219800 219400 044810
46F400 000001 060A80 003119 56F000 000219 228400 200044 200026 56F055
00021A 0AF0AF 003114 0A3487 003118 200044 200026 56F055 00021B 0AF0AF
003114 0A3488 003118 200044 200026 56F055 00021C 0AF0AF 003114 0A3489
003118 200044 200026 56F055 00021D 0AF0AF 003114 0A348A 003118 200044
200026 200055 0AF0A7 003118 045C14 045810 0AF080 0030EC 48D800 205C18
496900 60F400 000209 61F400 000201 62F400 000219 06DC00 003139 48D800
49D900 33000D 0AF0A8 00312C 51F400 7FFFFF 0AF080 003139 200003 0AF0AC
003136 0616A0 01DB15 21C400 226E00 200036 06CC20 20003A 00FEB9 0618A0
018048 595A00 60F400 000219 44B000 256000 2000A1 060580 003148 45E000
200065 0AF0A1 003148 51F400 7FFFFF 596000 45D800 5E9600 44F400 002AF8
4C9546 60F423 000219 200040 219B00 63F400 002D0B 61F400 000219 07EB85
5ED900 62F465 000209 0AF0A0 00317B 49DA00 48E22A 20002A 44E00D 0AF0A9
00317B 56F400 000005 200045 0AF0AF 003178 56F000 00021F 45F000 00021E
457000 00021F 447044 00021E 47F426 000001 20AE75 0AF0A7 00317E 200044
200026 200075 0AF0A7 00317E 0A1E54 0AF080 00317E 25FF00 457000 00021E
0A3487 0031AD 380100 060380 003197 61F400 00020A 60F400 00021A 060380
003196 56E000 45E800 205865 0AF0A7 003196 48F800 49E800 486800 495800
48D900 49E100 485100 496100 045911 000000 63F400 002D0A 61F400 00021A
60F400 00021A 07EB85 060480 0031A8 5ED900 200065 0AF0A0 0031A8 00008C
0AF080 0031AB 045810 000000 00000C 45E000 0A1E53 00000C 63F400 000FFD
75BD00 65F400 000220 48E300 200022 49E322 48ED1C 0608A0 200022 20000D
029008 496300 65F413 00031E 320700 63F400 000219 0607A0 565B00 63F400
000209 49D500 064080 0031C8 49D510 57BD00 44F40B 0000F0 0AF0AA 00326C
44F44D 0000BE 0AF0A7 00326C 44F44D 0000BF 0AF0AF 0031EE 65F400 000221
21BD00 60F400 0002DD 44F44D 0000C0 0AF0AA 0031EB 045810 20554D 0AF0AA
0031E8 045810 045515 49D000 49ED10 205D14 49D000 49ED10 205D14 49E000
49ED10 200014 0605A0 200022 487000 000FFE 65F409 000319 56F41A 0000F7
44BD00 45F444 00003A 3D0265 027060 219800 48D500 06D800 003225 200005
0AF0A9 003225 497000 000FFF 49F000 000FFD 200005 0AF0A9 003223 49E500
200005 0AF0A9 003223 49ED00 3B1005 0AF0A9 003223 49DD10 656B10 200022
485B22 73F422 FFFFF7 49F022 000FFE 200022 20521C 496B00 224E00 205503
0AF0A2 003223 00008C 0AF080 00326C 49F000 000FFF 48D500 44BD00 56F400
0000BE 205D44 0AF0AF 00326C 219800 48F000 00031E 49F000 0002DF 48F018
0002E0 48F018 000FFE 0605A0 20002A 200014 200009 48701A 000FFE 06D800
00326B 48D500 3D0305 0AF0A9 003260 49F000 000FFD 200005 0AF0A9 003260
49E500 3D0205 0AF0A9 00325E 49ED00 3B1005 0AF0A9 00325E 49DD10 656B10
205222 485B00 73F400 FFFFF7 49F000 000FFE 496B00 224E00 205503 0AF0A2
00325E 00008C 0AF080 00326C 3D0300 000000 49ED00 3D4000 000000 48ED00
48F01C 000FFE 0605A0 20002A 200010 200009 48701A 000FFE 63F400 000211
3B0800 45F400 000220 060780 003292 56EB1B 44F403 000008 0AF0A2 00327C
57F400 7FFFFF 0AF080 003292 200040 44F400 00031E 200045 027040 21D500
44EB00 47F400 000001 060B80 00328E 200044 200026 48D575 0AF0AF 00328_
20000D 029008 22AE00 56EB00 200064 566B00 495B00 60F400 000209 61F400
000201 62F400 000211 060780 0032BE 48D800 49E200 49E10D 0AF0A0 0032A3
33000D 0AF0A8 0032A7 51F400 7FFFFF 0AF080 0032BD 21C403 0AF0A4 0032AD
```

~~25~~ 85

~~Appendix A~~
~~(29 Pages Total)~~

```
48E200 0AF080 0032B7 0616A0 01DB15 21C400 226E00 200036 06CC20 21D33A
48E200 06D320 200032 00FEB9 0618A0 018048 00FEB9 0618A0 018040 595900
585A00 000000 00000C 5E9600 44F400 000006 45F446 000001 4C9532 57B040
21DB64 0AF0AB 0032CC 21DB00 0A1EC6 0032E0 44F400 000033 20004D 0AF0AF
0032DC 63F400 002D3B 60F400 000219 07EB85 63F400 002D4B 0AF080 0032E7
200064 0AF0AB 0032E0 21DB00 63F400 002D1B 60F400 000219 07EB85 63F400
002D2B 61F400 000201 07EB87 62F400 000211 44E000 060780 0032F6 5ED900
5FDA65 0AF0A0 0032F6 00008C 0AF080 0032F9 045810 0AF080 003456 44E000
20007D 0AF0A0 003456 0A37E1 00330C 0A37C0 003315 57F400 0000A2 57F44D
0000AE 0AF0A0 003315 20004D 0AF0A0 003456 0AF080 003315 57F400 0000AC
57F44D 0000B8 0AF0A0 003315 20004D 0AF0A0 003456 57BD00 47F400 000001
200078 20003B 57BD4D 0AF0A9 003322 20007C 20003B 20004D 0AF0AF 003456
0A1EC6 0033D6 57B100 46F42E 000005 47F45D 000007 020058 21E600 200078
21F800 45AF00 47F400 000200 47F4F9 000003 20007C 20005C 47F44C 000001
06D800 00333D 0AF0A2 00333D 00008C 0AF080 0033A6 200078 57B100 47F42E
000003 20007D 0AF0A8 00334B 45AF00 47F400 000200 2000F9 20004D 0AF0A0
003397 0A340C 0AF0A8 003353 20001B 577000 00032A 577000 00032B 57B000
21E73B 47F478 000003 20007C 20005C 47F44C 000001 06D800 003362 0AF0A2
003362 00008C 0AF080 00337E 200078 57F400 00000F 20004D 0AF0A8 0033D6
61F400 002D5B 390C00 45B300 060C80 003375 07D98F 20006D 0AF0A8 003375
00008C 0AF080 003376 000000 045111 000000 07E985 200065 0AF0A0 003456
0AF080 0033D6 61F400 002D5B 398400 57B300 20003A 20003A 21E500 060C80
00338E 07D98F 20006D 0AF0A8 00338E 00008C 0AF080 00338F 000000 045111
000000 07E985 200065 0AF0A0 003456 0AF080 0033D6 61F400 002D5D 45B300
060A80 0033A3 07D98F 20006D 0AF0A8 0033A3 00008C 0AF080 0033B3 000000
0AF080 0033B3 61F400 002D5B 45B300 060C80 0033B2 07D98F 20006D 0AF0A8
0033B2 00008C 0AF080 0033B3 000000 045111 5F9700 45F40B 00000C 0AF0AA
0033D6 21E700 2000F8 20002A 213900 000000 044911 000000 07E185 200065
0AF0A0 003456 393C00 56F000 00032A 07E985 200065 028060 567000 00032A
57F000 00032B 47F405 000001 0AF0A8 0033D6 200078 577000 00032B 00000C
61F400 000FF8 223400 71F400 FFF98A 233C00 330300 060380 003427 45F400
010000 56D900 46F465 001000 0AF0A9 0033FF 06D300 0033FC 4EEC00 5EE900
47F450 000003 200044 200026 200075 0AF0AF 0033F9 5EE900 200054 200026
200044 200026 200075 0AF0A7 0033FC 00008C 00008C 00000C 045911 0AF080
003425 200055 0AF0A1 003405 00008C 0AF080 003428 06D300 003424 56E100
46F400 000040 200055 0AF0A7 003410 00008C 0AF080 003425 5EE900 4EEC00
47F450 000001 200044 200026 200075 0AF0AF 003421 5EE900 200054 200026
200044 200026 205975 0AF0A7 003424 00008C 00008C 00000C 000000 045C14
045313 229100 61F400 000FF8 71F400 FFF98A 45F400 000040 48E100 060480
00344A 46B065 0AF0A7 003437 00008C 0AF080 00344B 0A3490 003440 5EE900
47F454 000001 200026 200075 0AF0AF 00344A 5EE900 200033 200044 47F426
000001 200075 0AF0A7 00344A 00008C 00000C 48D900 0A1EE6 003455 0A1EC3
003455 56F400 00000E 200045 0AF0A8 003455 0A1E62 0A1E53 00000C 0BF080
00347A 5EB900 21C403 0AF0AA 003462 5EBA00 45F400 00002E 200060 5E3A00
0AB0AC 003479 0AF0AB 003479 45F400 000005 2000A8 212400 200044 5E3A00
5EB800 44F403 000001 0AF0AA 003479 200045 0AF0A2 003477 0BF080 00350A
00000C 0BF080 00351E 00000C 56BA00 44BB00 209044 0AF0AA 0034B8 0AF0A3
003484 44F400 000020 200040 051FA0 44F400 000081 5FD800 221100 44F44D
000082 0AF0AA 003497 45F44D 000001 0AF0AA 0034BA 603B00 200064 0AF0A2
003485 0AF080 0034B8 45F400 000002 5FD865 0AF0A9 0034B8 44F400 000020
44F44D 000022 0AF0A9 003507 45F44D 000003 0AF0A7 003507 44F465 00000D
0AF0A9 0034B8 5FD000 20004D 0AF0A2 0034B6 5FD800 44F400 000020 20004C
```

```
5D3800 313800 611B00 0A1F73 205803 603B00 0460A1 00000C 45F464 000004
0AF0AA 0034F4 44F465 000030 0AF0AF 0034F6 5ED800 45F444 000009 0AF0AB
003507 46F465 0001F4 0AF0A7 003507 21C700 5ED8B8 200044 0AF0AB 003507
46F465 000032 0AF0A7 003507 21C700 2000B0 5ED818 200044 0AF0AB 003507
46F465 000005 0AF0A7 003507 21C700 2000B0 5ED818 200044 0AF0AB 003507
44F465 00000D 0AF0A7 003507 21C700 212E00 5FD870 20004D 0AF0A2 003507
5E391B 5F3A00 313900 611B00 0A1F73 603B00 0460A1 00000C 45F400 000009
5FD800 06CC00 003504 20004C 0AF0AB 003501 20006D 0AF0AF 003504 00008C
0AF080 003507 5FD800 0460A1 00000C 613B00 0460A1 00000C 60F400 000880
603800 340800 0A1FEB 003514 0BF080 003578 0AF080 003516 0BF080 003572
44F400 00000D 4C6000 60F400 FFFFFC 603900 0AB02C 00000C 60F400 000880
603800 44F400 000081 4C5800 240000 4C5800 4C5000 0A2DCE 00352A 0A6060
0A2DC9 00352D 0A6061 0A2DC2 003530 0A6062 0A2CD1 003533 0A6063 0A2BCC
003536 0A6064 0A2BD3 003539 0A6065 0A5866 0A2BD4 00353D 0A6060 0A2BD2
003540 0A6061 0A2CC6 003543 0A6062 0A5866 340A00 0A1EC6 00354D 0A3490
00354D 0BF080 003578 0AF080 00354F 0BF080 003572 340900 0A1FD2 003556
0BF080 003578 0AF080 003558 0BF080 003572 340B00 0A1FD5 00355F 0BF080
003578 0AF080 003561 0BF080 003572 340800 0A1FEB 003568 0BF080 003578
0AF080 00356A 0BF080 003572 44F400 00000D 4C6000 60F400 FFFFF0 603900
0AB02C 00000C 44F400 000020 4C5800 4C5800 4C5800 00000C 56E400 47F423
00000F 0607A0 200023 46F476 000030 200050 5C5800 56E400 0604A0 200023
200076 200050 5C5800 56E400 200076 200050 5C5800 00000C 67F400 001000
05F427 000FFF 08F4BE 002220 08F4A4 000084 08F4A2 004EF4 08F4A5 000010
08F4A3 00001C 300013 44F400 002000 06C400 00359F 485800 60F400 000820
602E00 602D00 60F400 000840 683200 60F400 000848 681C00 305000 681100
60F400 000860 603A00 603B00 60F400 000A00 687000 00084F 60F400 000B80
687000 000BA0 0A2071 0BF080 001321 08F4AC 006000 08F4AD 00B600 08F4B0
000B02 08F4A1 000003 08F4BF 007030 00FCB8 301400 0D0FF5 47F400 000005
200075 027070 5E1400 60F433 002E0D 64F433 000840 200033 219800 060880
0035D6 07E886 B89803 60F400 002C21 312B00 060380 0035DD 07D884 4C5900
0D0CD6 064B80 0035E6 0D0CD6 0A1EF6 0035E2 0BF080 00106A 0BA407 0A1FD0
0035EF 0D0DF7 361900 0D0B2F 0D0E03 361900 0D0B2F 312B00 240000 4C5900
44F400 000800 4C5900 248000 4C6100 0AA427 301700 0D0FF5 47F400 000005
200075 027070 200003 0AF0A2 003603 56F400 000002 5E1700 301500 0D0FF5
47F400 000004 200075 0AF0A8 00360D 56F400 000002 5E1500 303700 0D0FF5
47F400 000003 200075 0AF0A8 003616 200013 5E3700 303800 0D0FF5 47F400
000002 200075 0AF0AF 00361F 200013 5E3800 303900 0D0FF5 47F400 00270F
200075 0AF0AF 003628 200013 5E3900 0A1EF7 003629 301E00 0D0FF5 47F400
000078 47F400 0001F8 200076 5E1E00 0A1E6B 0A1EE4 00363A 0AA42E 0A2D62
0AF080 00363B 0A2D69 301F00 0D0FF5 47F400 007081 47F476 007000 5E1F76
47F400 001000 200075 0AF0AA 003653 200023 200075 0AF0AA 003653 200023
47F475 000081 0AF0AA 003653 5E9F00 200076 5C1F00 0A1EE6 00365C 44F400
862246 0A1EC3 00365C 44F400 AA7914 441A00 301600 0D0FF5 47F400 00001F
200076 5C1600 301900 0D0FF5 47F400 000007 200075 0AF0AF 00366B 56F400
000005 60F400 002E48 21D800 5E1900 07E887 08C732 301800 0D0FF5 47F400
0000FF 200075 0AF0A7 003679 5C1800 301B00 0D0FF5 47F400 000005 200075
0AF0A0 003681 5E1B00 302000 0D0FF5 47F400 00000B 200076 5E2000 47F400
000003 47F476 000001 200075 0AF0AA 00368F 0A2040 0BF080 001183 0A1FE9
003695 0B1F60 0F8963 0A1EC6 00369E 0D09AD 0A1EC7 00369E 0A2B6C 0A1EE8
00369E 0A2C71 0D0CD6 0C05E5 61F400 000982 63F400 000FF8 060480 0036B7
60F413 000221 340000 320100 06FE80 0036AE 49D800 205C05 038402 60F400
00021F 225800 485B00 044810 6A591B 495800 495800 496000 578D00 20000B
```

~~27~~ 87

~~Appendix A~~
~~(28 Pages Total)~~

```
0AF0AA 0036C6 21E43B 63F448 000FF8 060480 0036C4 48E300 06CD20 200022
485B00 000000 00000C 0C0A4E 0C0B43 0C0A4D 0C0A4D 0C0A4D 0C0A4D 0C0A4D
0C0A4D 0C0C24 0C0BC3 0C0A57 0C0A4D 0C0A4D 0C0A4D 0C0A4D 0C0A4D 0C0B9A
0C0C75 0C0BC3 0C0A4D 0C0A4D 0C0A4D 0C0A4D 0C0A4D 0C0C35 0C0C4E 0C0C9F
0C0CBB 0C0A4D 0C0A4D 0C0A4D 0C0A4D 0C0A4D 0C0A4D 0C0A4D 0C0A4D 0C0B7A
0C0B6D 0C0C07 0C0A4D 0C0A4D 0C0A4D 0C0A4D 0C0A4D 0C0A4D 0C0A57 0C0BC3
0C0A4D 0C0A4D 0C0A4D 0C0A4D 0C0A4D 0C0A4D 0C0C9F 0C0B9A 0C0C75 0C0A4D
0C0A4D 0C0A4D 0C0A4D 0C0A4D 0C0C4E 0C0CBB 0C0C35
_END 0000
```

What is claimed is:

1. A method of measuring the speed of moving targets in police traffic surveillance radar unit having at least two display windows, comprising the steps of:

(1) transmitting a radar signal toward one or more moving targets;

(2) receiving a spectrum of radar return signals from moving and stationary objects, said stationary objects being defined as those objects which have no relative velocity with respect to said police traffic surveillance radar unit if said radar unit is not moving;

(3) calculating the speed of a moving target which has the strongest radar return signal which is not the radar return signal indicative of the speed that the police traffic surveillance radar unit itself is moving, said strongest radar return signal being found in said spectrum of radar return signals;

(4) calculating the speed of at least one of the fastest moving targets having a radar return signal in said spectrum of radar return signals; and

(5) displaying in a first of said at least two display windows the speed of the moving target having said strongest radar return signal which is not the radar return signal indicative of the speed that the police traffic surveillance radar unit itself is moving, and selectively displaying the speed of one of the fastest moving targets determined in step (4) above.

2. The method of claim 1, wherein step (4) further comprises the steps of:

selecting for calculation of the speed of said at least one of the fastest moving targets by screening a plurality of the fastest moving targets having radar return signals in said spectrum in descending order of speed and eliminating a candidate if the ratio of average noise power of signals in said spectrum in a predetermined range of frequencies on either side of the frequency of the radar return signal corresponding to a particular fastest moving target candidate signal being evaluated to the signal strength of the particular fastest moving target candidate signal being evaluated is worse that a predetermined value, and selecting as the fastest speed candidate the first of said fastest speed candidates which has an acceptable value for said noise to signal power ratio, and calculating the speed of said selected fastest speed candidate for selective display with the display of the speed calculated in step (3).

3. The method of claim 2, further comprising the step of calculating and tracking the patrol speed at which said radar unit itself is moving and displaying said patrol speed on a display window of said radar unit using the strongest radar return signal that qualifies as a valid radar signal indicative of patrol speed, and wherein step (4) further comprises the steps of:

selecting for calculation of the speed of said at least one of the fastest moving targets by screening said fastest speed candidate to eliminate said fastest candidate for display of the speed thereof if the speed thereof is an integer multiple of the speed of the strongest signal in said spectrum, and the noise to signal power ratio of said fastest speed candidate does not meet predetermined additional noise to signal power criteria, said additional noise to signal power criteria based upon the signal power of said strongest radar return signal that qualifies as a valid radar signal indicative of patrol speed.

4. The method of claim 2, wherein step (4) further comprises the steps of:

selecting for calculation of the speed of said at least one of the fastest moving targets by screening said fastest speed candidate to eliminate said fastest candidate for display of the speed thereof if the speed thereof is below a predetermined speed.

5. The method of claim 2, further comprising the step of calculating and tracking the patrol speed at which said radar unit itself is moving and displaying said patrol speed on a display window of said radar unit using the strongest radar return signal that qualifies as a valid radar signal indicative of patrol speed, and further comprising the step of calculating the true power of said patrol speed, and wherein step (4) further comprises the steps of:

selecting for calculation of the speed of said at least one of the fastest moving targets by screening said fastest speed candidate to eliminate said fastest candidate for display of the speed thereof if the calculated patrol speed is below a predetermined limit, and the noise to signal power ratio of said fastest speed candidate is not better than an additional noise to signal power ratio selected based upon the true power of said patrol speed.

6. The method of claim 2, wherein steps (1)–(5) are repeated continuously, and wherein step (4) further comprises the steps of:

selecting for calculation of the speed of said at least one of the fastest moving targets by screening said fastest speed candidate to eliminate said fastest candidate for display of the speed thereof if the same fastest speed candidate has not been selected on previous repetitions of steps (1)–(5) so as to have persisted for a predetermined time.

7. The method of claim 2, wherein step (2) further comprises the steps of locating a predetermined number of the strongest radar return signals in said spectrum and calculating the true power of each of said predetermined number of the strongest radar return signals and saving the frequencies and true power of each of said predetermined number of strongest radar return signals, and wherein step (4) further comprises the steps of:

selecting for calculation of the speed of said at least one of the fastest moving targets by also screening said fastest speed candidate to eliminate said fastest candidate for display of the speed thereof if the true power of any of said plurality of strongest radar return signals is above a predetermined harmonic generation threshold, and the frequency of the fastest candidate being screened is an integer multiple of any of said strongest radar return signals which have true power above a predetermined harmonic generation threshold.

8. The method of claim 2, wherein step (2) further comprises the steps of locating a predetermined number of the strongest radar return signals in said spectrum and calculating the true power of each of said predetermined number of the strongest radar return signals and saving the frequencies and true power of each of said predetermined number of strongest radar return signals, and wherein step (4) further comprises the steps of:

selecting for calculation of the speed of said at least one of the fastest moving targets by also screening said fastest speed candidate to eliminate said fastest candidate for display of the speed thereof if the true power of any of said plurality of strongest radar return signals is above a first predetermined harmonic generation threshold, and if the true power of any other of said plurality of said strongest radar return signals is above a second intermodulation product threshold, and if the frequency of the fastest candidate being screened is

equal to either the sum or difference of the frequencies of any pair of said strongest radar return signals one of which has true power above said first predetermined harmonic generation threshold and the other of which has a true power above said second intermodulation product threshold.

9. The method of claim **2**, wherein step (4) further comprises the steps of:

selecting for calculation of the speed of said at least one of the fastest moving targets by screening said fastest speed candidate to eliminate said fastest candidate for display of the speed thereof if radio frequency interference was detected during the interval during which said spectrum of radar return signals was being received.

10. The method of claim **2**, wherein step (4) further comprises the steps of:

selecting for calculation of the speed of said at least one of the fastest moving targets by screening said fastest speed candidate so as to eliminate any potential fastest candidate for display of the speed thereof if the ratio of the signal power of another signal having a frequency within a predetermined range of frequencies surrounding the frequency of the potential fastest candidate under evaluation to the signal strength of the potential fastest candidate under evaluation is worse than a predetermined ratio.

11. The method of claim **2**, further comprising the step of calculating and tracking the patrol speed at which said radar unit itself is moving and displaying said patrol speed on a display window of said radar unit using the strongest radar return signal that qualifies as a valid radar signal indicative of patrol speed, and wherein step (4) further comprises the steps of:

selecting for calculation of the speed of said at least one of the fastest moving targets by screening said fastest speed candidate to eliminate said fastest candidate for display of the speed thereof if the signal power of said patrol speed has decreased by more than a predetermined amount in a predetermined amount of time.

12. The method of claim **2**, further comprising the step of calculating and tracking the patrol speed at which said radar unit itself is moving and displaying said patrol speed on a display window of said radar unit using the strongest radar return signal that qualifies as a valid radar signal indicative of patrol speed, and wherein said radar unit has at least three display windows, and wherein said patrol speed is displayed in a first of said display windows, and wherein the speed calculated in step (3) is displayed in a second of said display windows, and further comprising the step of receiving a user signal indicating the user desires to lock the currently displayed speed calculated in step 3 into said third display window and for transferring the currently displayed speed calculated in step (3) into said third display window and holding said displayed speed constant, and wherein step (4) further comprises the steps of displaying the fastest target speed calculated in step (4) and displaying said fastest target speed in said third display window if said speed calculated in step (3) is not currently locked into said third display window.

13. The method of claim **2**, further comprising the step of calculating and tracking the patrol speed at which said radar unit itself is moving and displaying said patrol speed on a display window of said radar unit using the strongest radar return signal that qualifies as a valid radar signal indicative of patrol speed, wherein step (4) further comprises the steps of:

selecting for calculation of the speed of said at least one of the fastest moving targets by screening said fastest speed candidate to eliminate said fastest candidate for display of the speed thereof if said patrol speed has only been recently acquired within a predetermined prior interval, or if said patrol speed is not being continuously tracked.

14. A method of determining and displaying the speed of one or more target vehicles in a police radar comprising the steps of:

transmitting a radar signal toward one or more of said target vehicles;

receiving radar return signals reflected from said one or more of said target vehicles and from other objects in the path of said radar signal which may be Doppler shifted in frequency from the frequency of the originally transmitted radar signals;

transforming said received radar return signals into digital data and performing a Fourier transform thereon to generate a plurality of frequency components of a frequency spectrum which defines the amplitude and Doppler shifted frequency of all said radar return signals from said one or more target vehicles and other objects from which said radar signal was reflected, each frequency component having a magnitude, defined in terms of either amplitude or power, and a frequency;

processing said frequency components to determine the frequency component with the highest frequency that has a magnitude which is large enough relative to the approximate average noise magnitude in a portion of said spectrum in which said frequency component was found to pass a qualification criteria defining a minimum acceptable signal quality;

once a frequency component having acceptable signal quality is found, converting the frequency of said frequency component to speed and displaying said speed.

15. The method of claim **14** wherein said step of processing said frequency components further comprises the step of also finding and displaying in a first display the speed of the target vehicle having the frequency component representing strongest radar return which does not represent the radar return from stationary objects representing the speed of a patrol car Carrying Said police radar while displaying in a second display the speed of the target vehicle having the fastest speed represented by the frequency component having the highest frequency which passes said qualification criteria, and when said frequency component having the highest frequency which passes said qualification criteria becomes the frequency component representing strongest radar return which does not represent the radar return from stationary objects representing the speed of a patrol car carrying said police radar, moving the displayed speed thereof from said second display to said first display so that a police officer using said police radar can develop a tracking history on said target vehicle having the fastest speed by observing both the fastest vehicle and its displayed speed as well as the vehicle thought to be generating the strongest radar return and its displayed speed such that proper identification of vehicles to be ticketed by tracking history can be achieved.

16. A method for determining the speed of one or more target vehicles using Doppler radar on a patrol platform comprising the steps of:

converting received radar signals bounced off one or more target vehicles and stationary objects into digital data

and performing a first Fourier transform on said digital data to find the amplitudes and frequencies of the Fourier frequency components that define frequency domain representation of the received radar signals, said Fourier components represented by digital data;

finding a plurality of the highest amplitude Fourier components representing the frequency domain representation of a plurality of the strongest received radar signals and storing data representing these strong signals in a memory;

filtering out the Fourier component digital data representing the received radar signals bounced off stationary objects which represent the speed of the patrol platform to generate filtered digital data;

performing a plurality of overlapping Fourier transforms using Hamming window weighting on the filtered digital data to generate new sample data;

finding the strongest Fourier component in the new sample data the Doppler shifted frequency of which represents the speed of the target vehicle having the strongest received radar signal;

finding in said new sample data one or more Fourier components having frequencies higher than the Doppler shifted frequency of said strongest received radar signal, said one or more higher frequency Fourier components hereafter referred to as the fastest candidates, said fastest candidates being representatives in the frequency domain of received radar signals bounced off one or more target vehicles that are moving faster than the target vehicle that reflected said strongest received radar signal and storing said one or more Fourier components representing said fastest candidates;

for each fastest candidate, determining attributes of the fastest candidate including the approximate average noise power in the vicinity of said fastest candidate, the target signal strength of each said fastest candidate and the signal strength of the strongest signal within a predetermined frequency proximity of said fastest candidate and storing said attributes;

calculating and storing a first noise magnitude divided by signal magnitude ratio comprising approximate average noise magnitude in the vicinity of the fastest candidate divided by target signal magnitude of the fastest candidate for each fastest candidate, and calculating and storing a second noise magnitude divided by signal magnitude ratio comprising local signal maximum signal magnitude for the strongest signal in a predetermined frequency range of said fastest candidate divided by the target signal magnitude of the fastest candidate;

receiving an input signal indicating a desired level of receiver sensitivity and choosing an appropriate noise/signal magnitude ratio based upon the selected sensitivity level;

sorting the fastest candidates and their attributes in order of descending frequency;

starting at the highest frequency fastest candidate, screening each fastest candidate for first and second noise power divided by signal magnitude ratios that are acceptable when measured against the noise divided by signal power ratio selected based upon the selected sensitivity level and selecting the first fastest candidate that is acceptable;

screening the selected fastest candidate to prevent display of a speed calculated therefrom if said fastest candidate appears to be a harmonic of either the strongest signal or the signal representing the speed of the patrol platform or appears to the result of a double or triple bounce of a transmitted radar signal between said patrol platform and some other object or appears to be an intermodulation product of said strong signals; and

calculating and displaying the speed of the target vehicle which reflected the received radar signal from which the fastest candidate that passed all the screening tests resulted.

17. The method of claim **16** further comprising the steps of calculating and displaying the speed of said strongest signal.

18. A method of determining and displaying the speed of one or more target vehicles in a police radar comprising the steps of:

transmitting a radar signal toward one or more of said target vehicles;

receiving radar return signals reflected from said one or more of said target vehicles and from other objects in the path of said radar signal which may be Doppler shifted in frequency from the frequency of the originally transmitted radar signals using a receiver with a variable gain;

adjusting the gain of said receiver so that the peak amplitude of received signals is maintained between predetermined limits to decrease distortion and converting said received signals into blocks of digital data, gain adjustments occurring only in the interval between completion of receiving one block of digital data and the beginning of receipt of the next block of data, and storing said gain value during the reception of the radar return signals which were the source for each block of digital data;

performing one or more Fourier transforms on each block of received digital data to generate digital data representing Fourier spectral components in a frequency domain said spectral components having different frequencies and amplitudes which in the frequency domain represent the amplitude and Doppler shifted frequency of said radar return signals from at least said one or more target vehicles in a time domain;

processing said Fourier spectral components to compare the power of at least some of said spectral components to the average power of a predetermined number of spectral components which are immediately adjacent to the spectral components whose power is determined, and selecting for further processing any spectral component with a power which exceeds the average power of its neighboring spectral components by a predetermined amount;

computing the true power of each spectral component so selected using the gain at which said receiver was set when the radar return signal which was the basis for each said selected spectral component was received;

determining and displaying the speed of the Strongest target vehicle with the strongest radar return signal corresponding to the spectral component with the highest true power and determining and displaying the speed of a faster target vehicle with a faster speed than the speed of the strongest target regardless of whether the radar return signal from said faster target is also the strongest radar return.

19. An apparatus comprising:

a radar transceiver having a transmitter and antenna cooperating to transmit radar energy toward target

vehicles and having a receiver sharing said antenna with said transmitter for receiving reflected radar energy;

a memory for storing data and instructions;

a digital-to-analog converter coupled to said receiver including circuits to sample said reflected radar energy and convert said samples into digital sample points and store said sample points in memory;

a computer coupled to said memory and programmed to retrieve said sample points and perform a Fourier transform calculation thereon to generate a plurality of frequency components representing the Fourier spectrum of the time domain signal defined by said reflected radar energy, each said frequency component characterized by a frequency and a magnitude, said computer also programmed to process said frequency components to find a fastest frequency component having the highest frequency and which also has a magnitude which is large enough relative to the approximate average noise magnitude in a portion of said spectrum in which said fastest frequency component was found to pass a qualification criteria defining a minum acceptable signal quality.

* * * * *