US011194039B2

(12) United States Patent
Shelton

(10) Patent No.: US 11,194,039 B2
(45) Date of Patent: Dec. 7, 2021

(54) **TRAFFIC RADAR SYSTEM WITH PATROL VEHICLE SPEED DETECTION**

(71) Applicant: **Kustom Signals, Inc.**, Lenexa, KS (US)

(72) Inventor: **Maurice Shelton**, Buffalo, KS (US)

(73) Assignee: **Kustom Signals, Inc.**, Lenexa, KS (US)

(*) Notice: Subject to any disclaimer, the term of this patent is extended or adjusted under 35 U.S.C. 154(b) by 519 days.

(21) Appl. No.: **16/137,860**

(22) Filed: **Sep. 21, 2018**

(65) **Prior Publication Data**

US 2019/0107619 A1 Apr. 11, 2019

Related U.S. Application Data

(60) Provisional application No. 62/569,667, filed on Oct. 9, 2017, provisional application No. 62/569,923, filed on Oct. 9, 2017, provisional application No. 62/570,446, filed on Oct. 10, 2017.

(51) **Int. Cl.**

G01S 13/92	(2006.01)
G01S 7/04	(2006.01)
G01S 13/87	(2006.01)
G01S 7/40	(2006.01)
G01S 13/58	(2006.01)
G01S 7/288	(2006.01)
G01S 13/931	(2020.01)

(52) **U.S. Cl.**

CPC ***G01S 13/92*** (2013.01); ***G01S 7/04*** (2013.01); ***G01S 7/288*** (2013.01); ***G01S 7/4052*** (2013.01); ***G01S 13/58*** (2013.01); ***G01S 13/87*** (2013.01); *G01S 7/2883* (2021.05); *G01S 7/4082* (2021.05); *G01S 2013/932* (2020.01)

(58) **Field of Classification Search**

None

See application file for complete search history.

(56) **References Cited**

U.S. PATENT DOCUMENTS

2005/0062642	A1*	3/2005	Aker	G01S 7/064 342/104
2006/0181449	A1*	8/2006	Aker	G01S 13/92 342/104
2015/0243165	A1*	8/2015	Elsheemy	B60R 25/00 340/906
2018/0225961	A1*	8/2018	Okamura	B60R 1/00

* cited by examiner

Primary Examiner — Whitney Moore

(74) *Attorney, Agent, or Firm* — Hovey Williams LLP

(57) **ABSTRACT**

A traffic radar system comprises a first radar transceiver, a second radar transceiver, a speed determining element, and a processing element. The first radar transceiver transmits and receives radar beams and generates a first electronic signal corresponding to the received radar beam. The second radar transceiver transmits and receives radar beams and generates a second electronic signal corresponding to the received radar beam. The speed determining element determines and outputs a speed of the patrol vehicle. The processing element is configured to receive a plurality of digital data samples derived from the first or second electronic signals, receive the speed of the patrol vehicle, process the digital data samples to determine a relative speed of at least one target vehicle in the front zone or the rear zone, and convert the relative speed of the target vehicle to an absolute speed using the speed of the patrol vehicle.

15 Claims, 8 Drawing Sheets

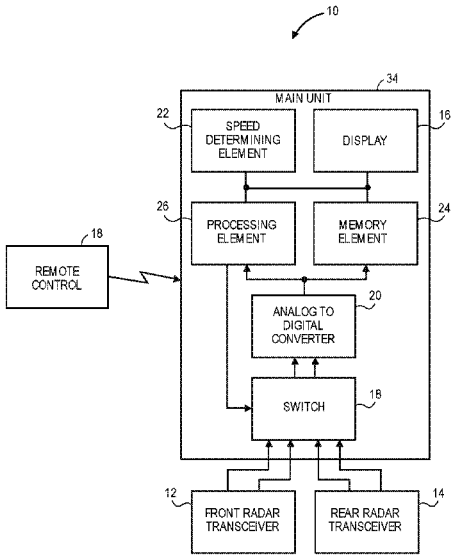

Kustom Exhibit 2012
Applied Concepts v. Kustom Signals
IPR2024-00884

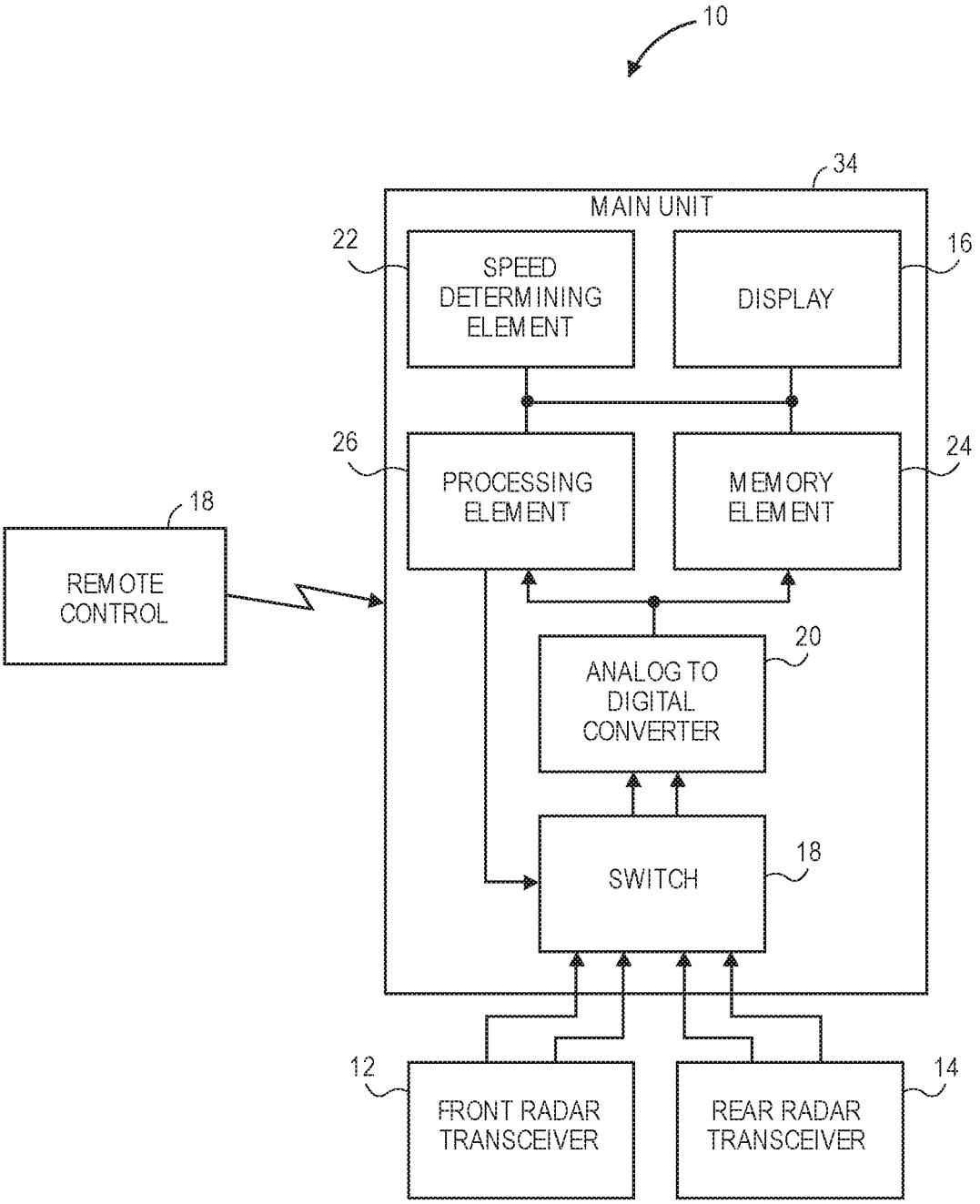
10
34
MAIN UNIT
22
SPEED DETERMINING ELEMENT
DISPLAY
16
26
PROCESSING ELEMENT
MEMORY ELEMENT
24
18
REMOTE CONTROL
20
ANALOG TO DIGITAL CONVERTER
SWITCH
18
12
FRONT RADAR TRANSCEIVER
REAR RADAR TRANSCEIVER
14

FIG. 1

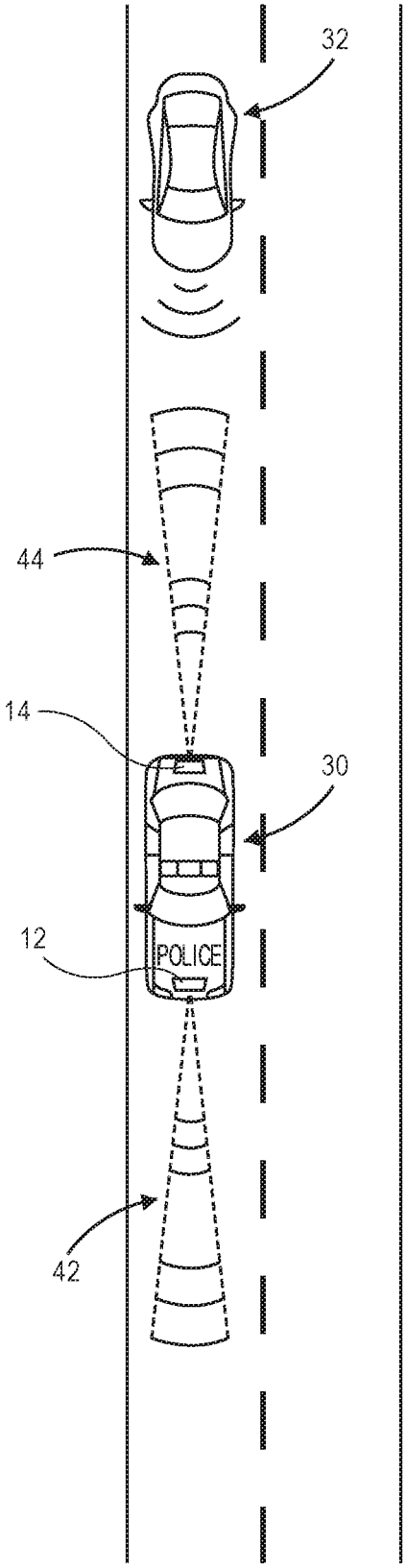

FIG. 2

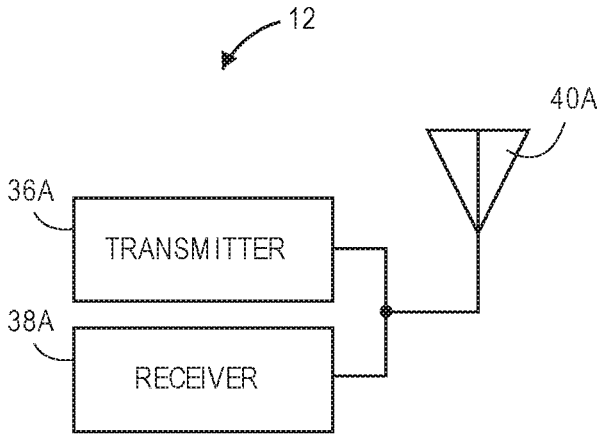
12
40A
36A
TRANSMITTER
38A
RECEIVER

FIG. 3

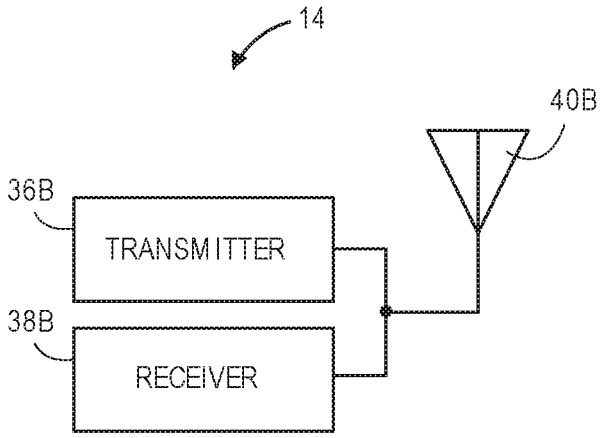
14
40B
36B
TRANSMITTER
38B
RECEIVER

FIG. 4

SPEED DATA MESSAGE

$GPRMC,082653.100,A,2446.4768,N,12100.0344,E,0.00,128.42,270705,,,A*67 <CR><LF>

FIG. 5

SPEED DATA MESSAGE FORMAT

FIELD	EXAMPLE	COMMENTS
PREAMBLE	$	START OF SENTENCE
TALKER ID	GP	NAVIGATION SYSTEM GP=GPS GL=GLONASS GN=GLOBAL NAVIGATIO BD=BEIDOU (COMPASS)
SENTENCE ID	RMC	RECOMMENDED MINIMUM SPECIFIC GNSS DATA
UTC TIME	082653.100	HHMMSS.SSS (HOURS, MINUTES, SECONDS)
DATA VALID STATUS	A	A = DATA VALID V = NAVIGATION RECEIVER WARNING (DATA INVALID
LATITUDE N/S INDICATOR	2446.4768 N	DDMM.MMMM (DEGREES AND MINUTES) N = NORTH, S = SOUTH
LONGITUDE E/W INDICATOR	12100.0344 E	DDDMM.MMMM (DEGREES AND MINUTES) E = EAST, W = WEST
SPEED OVER GROUND	0.00	KNOTS
COURSE OVER GROUND	128.42	DEGREES TRUE
UTC DATE	270705	DDMMYY (DAY, MONTH, YEAR)
MAGNETIC VARIATION MAGNETIC VARIATION		DEGREES MAGNETIC E = EAST, W = WEST
MODE INDICATOR	A	A = AUTONOMOUS MODE D = DIFFERENTIAL MODE E = ESTIMATED (DEAD RECKONING) MODE M = MANUAL INPUT MODE S = SIMULATOR MODE N = DATA NOT VALID
END OF DATA FIELDS	*	ASTERISK DELIMITER
CHECKSUM	67	TWO CHARACTER HEXADECIMAL VALUE
TERMINATOR	<CR><LF>	END OF SENTENCE SEQUENCE

FIG. 6

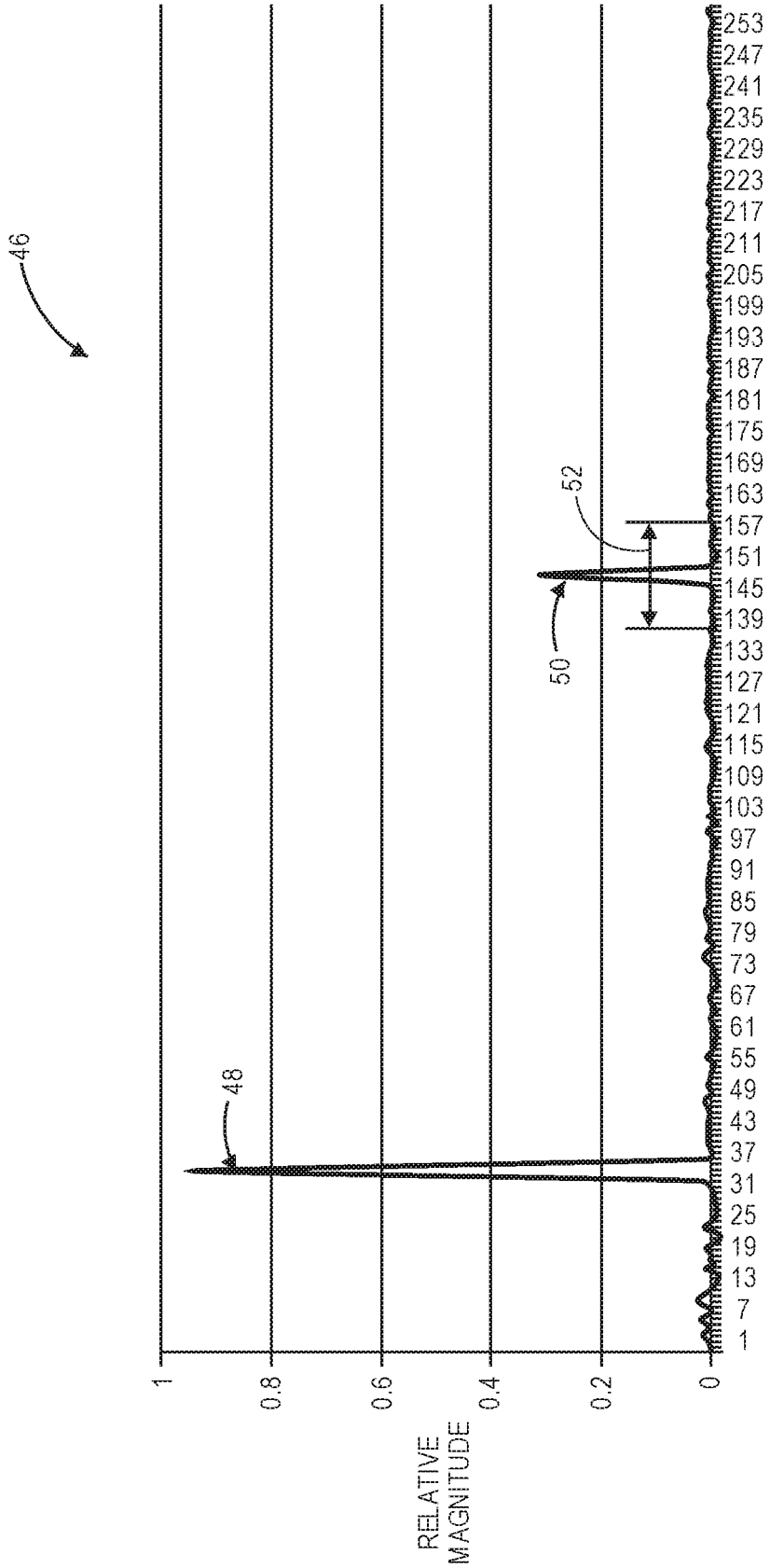
46
48
50
52
RELATIVE MAGNITUDE
1
0.8
0.6
0.4
0.2
0
1
7
13
19
25
31
37
43
49
55
61
67
73
79
85
91
97
103
109
115
121
127
133
139
145
151
157
163
169
175
181
187
193
199
205
211
217
223
229
235
241
247
253

FIG. 7

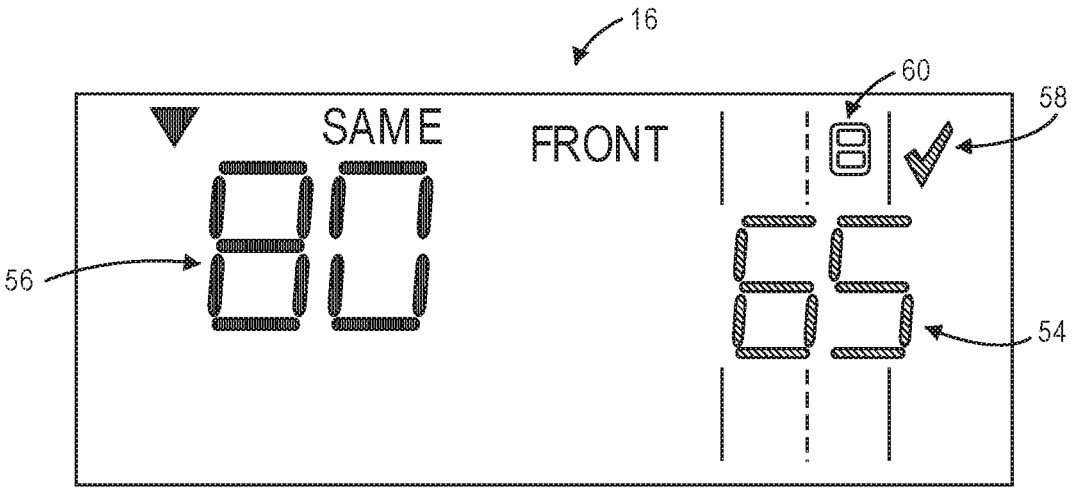

FIG. 8

DATA PACKET FORMAT

RECORD NUMBER:	00101
RECORD TYPE:	LOCKED SPEEDS EVENT
UTC TIME:	09:14:32
UTC DATE:	27-09-2017
LOCATION:	37.6792 N, 95.4572 W
PATROL COURSE:	273 DEGREES
PATROL SPEED:	65 MPH
TARGET SPEED:	80 MPH
OPERATING MODE:	MOVING SAME DIRECTION

FIG. 9

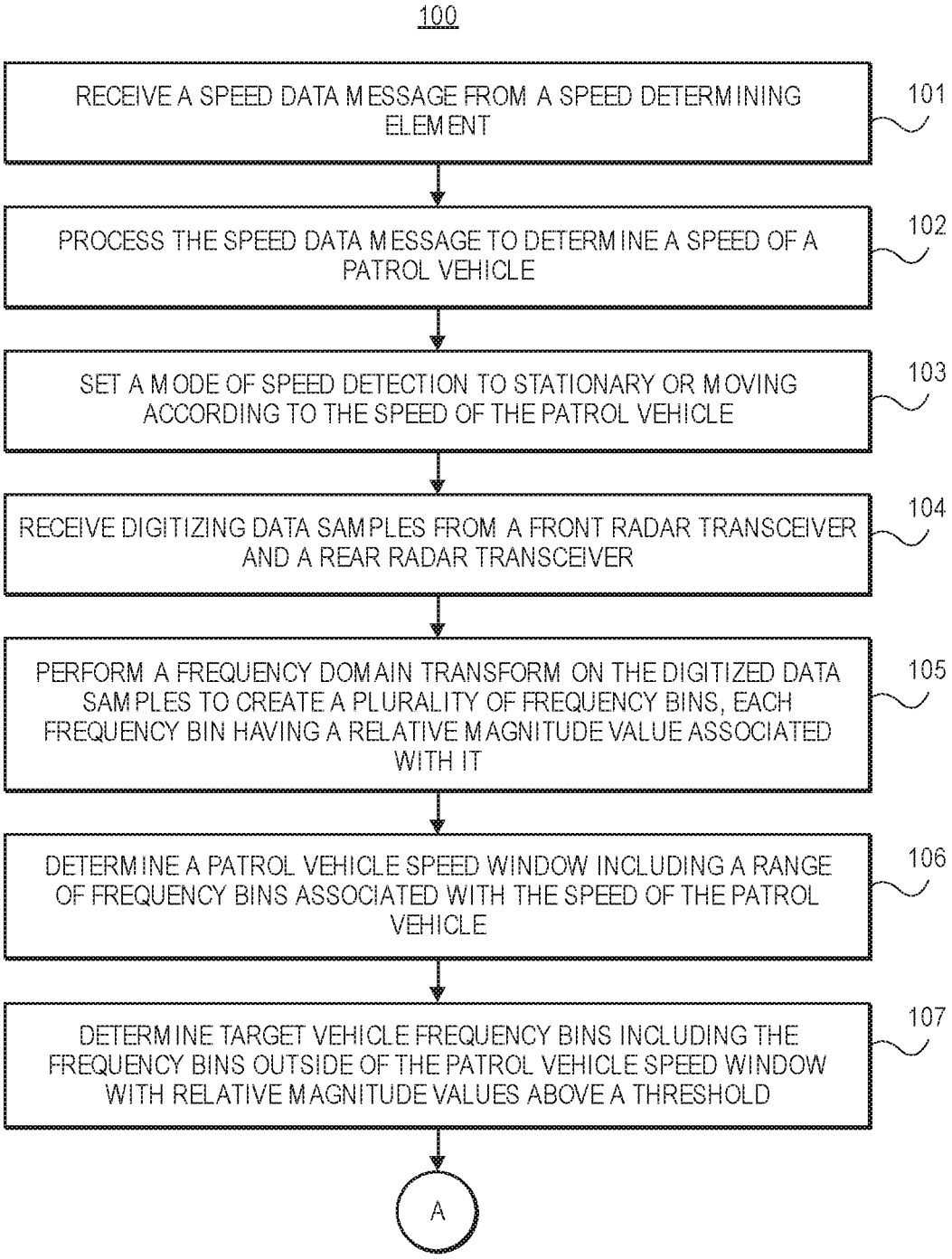
100
RECEIVE A SPEED DATA MESSAGE FROM A SPEED DETERMINING ELEMENT
101
PROCESS THE SPEED DATA MESSAGE TO DETERMINE A SPEED OF A PATROL VEHICLE
102
SET A MODE OF SPEED DETECTION TO STATIONARY OR MOVING ACCORDING TO THE SPEED OF THE PATROL VEHICLE
103
RECEIVE DIGITIZING DATA SAMPLES FROM A FRONT RADAR TRANSCEIVER AND A REAR RADAR TRANSCEIVER
104
PERFORM A FREQUENCY DOMAIN TRANSFORM ON THE DIGITIZED DATA SAMPLES TO CREATE A PLURALITY OF FREQUENCY BINS, EACH FREQUENCY BIN HAVING A RELATIVE MAGNITUDE VALUE ASSOCIATED WITH IT
105
DETERMINE A PATROL VEHICLE SPEED WINDOW INCLUDING A RANGE OF FREQUENCY BINS ASSOCIATED WITH THE SPEED OF THE PATROL VEHICLE
106
DETERMINE TARGET VEHICLE FREQUENCY BINS INCLUDING THE FREQUENCY BINS OUTSIDE OF THE PATROL VEHICLE SPEED WINDOW WITH RELATIVE MAGNITUDE VALUES ABOVE A THRESHOLD
107
A

FIG. 10A

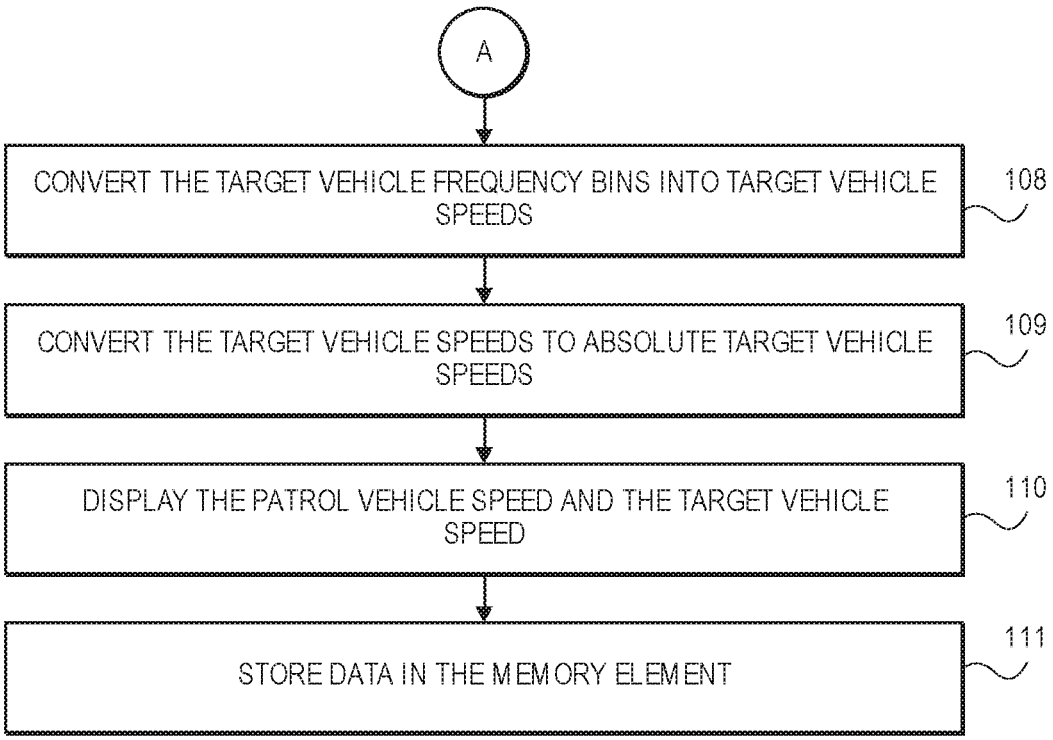
A
CONVERT THE TARGET VEHICLE FREQUENCY BINS INTO TARGET VEHICLE SPEEDS
108
CONVERT THE TARGET VEHICLE SPEEDS TO ABSOLUTE TARGET VEHICLE SPEEDS
109
DISPLAY THE PATROL VEHICLE SPEED AND THE TARGET VEHICLE SPEED
110
STORE DATA IN THE MEMORY ELEMENT
111

FIG. 10B

TRAFFIC RADAR SYSTEM WITH PATROL VEHICLE SPEED DETECTION

RELATED APPLICATIONS

The current patent application is a non-provisional application which claims priority benefit to U.S. Provisional Application No. 62/569,667, entitled "TRAFFIC RADAR SYSTEM WITH MULTIPLE ZONE TARGET DETECTION", and filed Oct. 9, 2017; U.S. Provisional Application No. 62/569,923, entitled "GPS ASSISTED PATROL SPEED SEARCH FOR DSP TRAFFIC RADAR", and filed Oct. 9, 2017; and U.S. Provisional Application No. 62/570,446, entitled "TRAFFIC RADAR SYSTEM WITH ELECTRONIC TUNING FORK TEST FEATURE", and filed Oct. 10, 2017. The earlier-filed provisional applications are hereby incorporated by reference in their entireties into the current application.

BACKGROUND OF THE INVENTION

Field of the Invention

Embodiments of the current invention relate to radar systems that include patrol vehicle speed detectors to help determine target vehicle speeds.

Description of the Related Art

Traffic radio and ranging (radar) systems that are implemented in law enforcement patrol vehicles typically include at least one radar transceiver that transmits a radar beam and receives reflections of the radar beam as it bounces off of target vehicles in a zone. The received reflections of the radar beam are converted to an electronic signal which is processed to determine the speeds of the target vehicles, which may then be displayed on a display. When using various techniques to determine target vehicle speeds, it is necessary to know the speed of the patrol vehicle. Prior art traffic radar systems have accessed the patrol vehicle speed from the patrol vehicle itself. But, connecting the traffic radar system to the patrol vehicle's speed detection electronics may be difficult and time consuming. Furthermore, each patrol vehicle make and/or model may use a different protocol to output the patrol vehicle's speed, thereby requiring multiple software or firmware interfaces for the traffic radar system to properly receive the patrol vehicle speed from different vehicles.

SUMMARY OF THE INVENTION

Embodiments of the current invention solve the above-mentioned problems and provide a distinct advance in the art of traffic radar systems. An exemplary traffic radar system includes a patrol vehicle speed detector that is independent from the patrol vehicle and thus requires no connection to the patrol vehicle and no specific vehicle software or firmware interface.

The traffic radar system comprises a first radar transceiver, a second radar transceiver, a speed determining element, and a processing element. The first radar transceiver is configured to transmit and receive radar beams from a front zone corresponding to area in front of a patrol vehicle. The first radar transceiver is further configured to generate a first electronic signal corresponding to the received radar beam. The second radar transceiver is configured to transmit and receive radar beams from a rear zone corresponding to area behind the patrol vehicle. The second radar transceiver is further configured to generate a second electronic signal corresponding to the received radar beam. The speed determining element is configured to determine and output a speed of the patrol vehicle. The processing element is configured to receive a plurality of digital data samples derived from the first or second electronic signals, receive the speed of the patrol vehicle, process the digital data samples to determine a relative speed of at least one target vehicle in the front zone or the rear zone, and convert the relative speed of the target vehicle to an absolute speed using the speed of the patrol vehicle.

Another embodiment of the invention provides a traffic radar system comprising a first radar transceiver, a second radar transceiver, a speed determining element, and a processing element. The first radar transceiver is configured to transmit and receive radar beams from a front zone corresponding to area in front of a patrol vehicle. The first radar transceiver is further configured to generate a first electronic signal corresponding to the received radar beam. The second radar transceiver is configured to transmit and receive radar beams from a rear zone corresponding to area behind the patrol vehicle. The second radar transceiver is further configured to generate a second electronic signal corresponding to the received radar beam. The speed determining element is configured to receive and process radio frequency signals from a global navigation satellite system to determine and output a speed of the patrol vehicle. The processing element is configured to receive a plurality of digital data samples derived from the first or second electronic signals, receive the speed of the patrol vehicle, perform a time domain to frequency domain conversion on the digital data samples creating a plurality of frequency bins, each frequency bin associated with a bin number, having a relative magnitude value, and corresponding to a speed of a vehicle, identify a range of frequency bin numbers that correspond to the speed of the patrol vehicle and form a patrol vehicle speed window, determine at least one group of successive frequency bin numbers outside of the patrol vehicle speed window whose relative magnitude is greater than a spike threshold value, convert one frequency bin number in each group to the relative speed of one target vehicle, and convert the relative speed of the target vehicle to an absolute speed using the speed of the patrol vehicle.

Yet another embodiment of the invention provides a computer-implemented method for determining speeds of target vehicles using a traffic radar system. The method comprises receiving a speed of a patrol vehicle from a speed determining element; receiving a plurality of digital data samples derived from radar transceiver signals; processing the digital data samples to determine a relative speed of at least one target vehicle in a front zone relative to the patrol vehicle or the rear zone relative to the patrol vehicle; and converting the relative speed of the target vehicle to an absolute speed using the speed of the patrol vehicle.

This summary is provided to introduce a selection of concepts in a simplified form that are further described below in the detailed description. This summary is not intended to identify key features or essential features of the claimed subject matter, nor is it intended to be used to limit the scope of the claimed subject matter. Other aspects and advantages of the current invention will be apparent from the following detailed description of the embodiments and the accompanying drawing figures.

BRIEF DESCRIPTION OF THE DRAWING FIGURES

Embodiments of the current invention are described in detail below with reference to the attached drawing figures, wherein:

FIG. **1** is a schematic block diagram illustrating electronic components of a traffic radar system, constructed in accordance with various embodiments of the current invention;

FIG. **2** is an environmental top view of a law enforcement patrol vehicle and a target vehicle, the law enforcement patrol vehicle is equipped with the traffic radar system which includes a front radar transceiver generating a first radar beam and a rear radar transceiver generating a second radar beam;

FIG. **3** is a schematic block diagram illustrating electronic components of the front radar transceiver assembly;

FIG. **4** is a schematic block diagram illustrating electronic components of the rear radar transceiver assembly;

FIG. **5** is an example of a satellite data message output by a speed determining element;

FIG. **6** is a table explaining a format of the satellite data message;

FIG. **7** is a plot of relative magnitude vs. frequency resulting from a fast Fourier transform calculation performed on data from the front radar transceiver and the rear radar transceiver;

FIG. **8** is a front view of at least a portion of a display of a main unit of the traffic radar system;

FIG. **9** is a table explaining a format of a data packet that is stored in non-volatile memory during a data logging event; and

FIGS. **10**A and **10**B include a listing of at least a portion of the steps of a computer-implemented method for determining speeds of target vehicles.

The drawing figures do not limit the current invention to the specific embodiments disclosed and described herein. The drawings are not necessarily to scale, emphasis instead being placed upon clearly illustrating the principles of the invention.

DETAILED DESCRIPTION OF THE EMBODIMENTS

The following detailed description of the invention references the accompanying drawings that illustrate specific embodiments in which the invention can be practiced. The embodiments are intended to describe aspects of the invention in sufficient detail to enable those skilled in the art to practice the invention. Other embodiments can be utilized and changes can be made without departing from the scope of the present invention. The following detailed description is, therefore, not to be taken in a limiting sense. The scope of the present invention is defined only by the appended claims, along with the full scope of equivalents to which such claims are entitled.

Referring to FIGS. **1** and **2**, a traffic radar system **10**, constructed in accordance with various embodiments of the current invention, broadly comprises a front radar transceiver **12**, a rear radar transceiver **14**, a display **16**, a switch **18**, an analog-to-digital converter (ADC) **20**, a speed determining element **22**, a memory element **24**, a processing element **26**, and a remote control **28**. The traffic radar system **10** is typically installed in or on a law enforcement patrol vehicle **30** and is utilized to monitor the speeds of (target) vehicles **32** on a roadway.

The display **16**, the switch **18**, the ADC **20**, the speed determining element **22**, the memory element **24**, and the processing element **26** generally form a main unit **34**. The main unit **34** may include additional components not shown in the figures and not discussed in greater detail. The additional components may include a housing to retain the electronic circuits, a communication element to provide wired or wireless communication with other devices, a user interface to allow users to operate the system **10**, and so forth. The housing may also include a mount or hardware to mount the main unit **34** in or on the vehicle dashboard or center console.

The front radar transceiver **12** generally transmits and receives radio frequency (RF) electromagnetic radiation for a radio detection and ranging (radar) application. The front radar transceiver **12** may include a transmitter **36**A, a receiver **38**A, and an antenna **40**A, as shown in FIG. **3**. The transmitter **36**A may include electronic signal transmitting circuits, such as oscillators, mixers, frequency multipliers, filters, amplifiers, impedance matchers, and the like. The transmitter **36**A generates a first RF electronic signal with an exemplary frequency of approximately 35.5 gigahertz (GHz), which is in the Ka band of radar frequency band classification. The transmitter **36**A may receive a signal or data input that triggers it to generates the first RF electronic signal. Or, the transmitter **36**A may generate the first RF electronic signal on a regular, periodic basis.

The receiver **38**A may include electronic signal receiving circuits, such as oscillators, mixers, matched filters, amplifiers, and the like. The receiver **38**A may receive a second RF electronic signal that includes reflection data resulting from reflections of a radar beam off of objects in the vicinity of the front radar transceiver **12**. The receiver **38**A may generate a front radar output electronic signal that has a lower frequency and still includes the reflection data. In various embodiments, the front radar output electronic signal has a dual complex or quadrature (I/Q) format. The front radar output electronic signal is communicated to the main unit **34**.

The antenna **40**A generally transmits a first radar beam **42** and receives reflections of the radar beam **42** as it reflects from target vehicles **32**. When the antenna **40**A receives the first RF electronic signal from the transmitter **36**A, it transmits the first radar beam **42**, that is, radio wave electromagnetic radiation forming the radar beam having an exemplary frequency of approximately 35.5 GHz. When the antenna **40**A receives reflections of the first radar beam **42**, it generates the second RF electronic signal. The antenna **40**A may be embodied by directional antennas such as a parabolic antennas. The antenna **40**A may transmit the first radar beam **42** as shown in FIG. **2**, wherein the first radar beam **42** may have a width of approximately 12 degrees. The front radar transceiver **12** may be mounted or installed on the forward portion of the patrol vehicle, such as a hood, a grill, or a front bumper of the vehicle. Thus, the first radar beam **42** is transmitted in front of the patrol vehicle, also known as the "front zone".

Referring to FIG. **4**, the rear radar transceiver **14** includes a transmitter **36**B, a receiver **38**B, and an antenna **40**B, each of which is substantially identical in structure and function to the like-named components described above for the front radar transceiver **12**. The antenna **40**B may transmit a second radar beam **44** as shown in FIG. **2**, wherein the second radar beam **44** may also have a width of approximately 12 degrees. The receiver **38**B may generate a rear radar output electronic signal that varies according to reflections of the second radar beam **44** received by the antenna

40B. In various embodiments, the rear radar output electronic signal has a dual complex or quadrature (I/Q) format. The rear radar output electronic signal is communicated to the main unit **34**. The rear radar transceiver **14** may be mounted or installed on the rear portion of the patrol vehicle, such as a trunk cover or a rear bumper of the vehicle. Thus, the second radar beam **44** is transmitted in the rear of the patrol vehicle, also known as the "rear zone".

The display **16** may include video devices of the following types: light-emitting diode (LED), organic LED (OLED), Light Emitting Polymer (LEP) or Polymer LED (PLED), liquid crystal display (LCD), thin film transistor (TFT) LCD, LED side-lit or back-lit LCD, plasma, heads-up displays (HUDs), or the like, or combinations thereof. The display **16** may include a screen on which the information is presented, with the screen possessing a square or a rectangular aspect ratio that may be viewed in either a landscape or a portrait mode. In various embodiments, the display **16** may also include a touch screen occupying the entire screen or a portion thereof so that the display **16** functions as part of a user interface. The touch screen may allow the user to interact with the main unit **34** by physically touching, swiping, or gesturing on areas of the screen.

The switch **18** may have a double pole, double throw (DPDT) configuration with a first pair of input contacts, a second pair of input contacts, and a pair of output contacts. The first input contacts are electrically connected to the front radar transceiver **12** and receive the front radar output electronic signal. The second input contacts are electrically connected to the rear radar transceiver **14** and receive the rear radar output electronic signal. The output contacts may be electrically connected to the ADC **20**. The switch **18** may operate in one of two modes. In a first mode, the output contacts receive the front radar output electronic signal. In a second mode, the output contacts receive the rear radar output electronic signal. Selection of the mode is controlled by a switch control signal from the processing element **26**.

The ADC **20** receives the front radar output electronic signal or the rear radar output electronic signal from the switch **18**. The ADC **20** includes electronic circuitry that converts the analog electrical characteristics of the front radar output electronic signal or the rear radar output electronic signal to a corresponding stream of sampled digital data, which includes a plurality of samples, each sample representing a value of the signal. The ADC **20** communicates the sampled digital data stream of the front radar output electronic signal or the rear radar output electronic signal to the memory element **24**, the processing element **26**, or both.

The speed determining element **22** generally determines a speed of the main unit **34** and by extension, the patrol vehicle **30**. The speed determining element **22** may receive and process radio frequency (RF) signals from a multi-constellation global navigation satellite system (GNSS) such as the global positioning system (GPS), the GLONASS system, the Galileo system, the quasi-zenith satellite system (QZSS), and so forth. The speed determining element **22** may also may receive and process RF signals from telecommunications networks that provide or utilize Assisted GPS (A-GPS). The speed determining element **22** may accompany or include an antenna to assist in receiving the satellite signals. The antenna may be a patch antenna, a linear antenna, or any other type of antenna that can be used with location or navigation devices. The speed determining element **22** may include satellite navigation receivers, processors, controllers, other computing devices, or combinations thereof, and memory. An exemplary speed determining element **22** is embodied by the SE868K3-A GNSS module from Telit Wireless Solutions of London, England UK. The speed determining element **22** may determine or receive positioning or geolocation information from GNSS constellations at regular intervals over time and thus is operable to determine speed, or speed over ground, as well as heading, or course over ground. The speed determining element **22** communicates the patrol vehicle speed to the processing element **26**, the memory element **24**, or both. The patrol vehicle speed, along with other data, is output in a satellite data message at regular intervals from the speed determining element **22**.

The memory element **24** may be embodied by devices or components that store data in general, and digital or binary data in particular, and may include exemplary electronic hardware data storage devices or components such as read-only memory (ROM), programmable ROM, erasable programmable ROM, random-access memory (RAM) such as static RAM (SRAM) or dynamic RAM (DRAM), cache memory, hard disks, floppy disks, optical disks, flash memory, thumb drives, universal serial bus (USB) drives, or the like, or combinations thereof. In some embodiments, the memory element **24** may be embedded in, or packaged in the same package as, the processing element **26**. The memory element **24** may include, or may constitute, a "computer-readable medium". The memory element **24** may store the instructions, code, code statements, code segments, software, firmware, programs, applications, apps, services, daemons, or the like that are executed by the processing element **26**. The memory element **24** may also store data that is received by the processing element **26** or the device in which the processing element **26** is implemented. The processing element **26** may further store data or intermediate results generated during processing, calculations, and/or computations as well as data or final results after processing, calculations, and/or computations. In addition, the memory element **24** may store settings, data, documents, sound files, photographs, movies, images, databases, and the like.

The processing element **26** may comprise one or more processors. The processing element **26** may include electronic hardware components such as microprocessors (single-core or multi-core), microcontrollers, digital signal processors (DSPs), field-programmable gate arrays (FPGAs), analog and/or digital application-specific integrated circuits (ASICs), or the like, or combinations thereof. The processing element **26** may generally execute, process, or run instructions, code, code segments, code statements, software, firmware, programs, applications, apps, processes, services, daemons, or the like. The processing element **26** may also include hardware components such as registers, finite-state machines, sequential and combinational logic, and other electronic circuits that can perform the functions necessary for the operation of the current invention. In certain embodiments, the processing element **26** may include multiple computational components and functional blocks that are packaged separately but function as a single unit. The processing element **26** may be in electronic communication with the other electronic components through serial or parallel links that include universal busses, address busses, data busses, control lines, and the like. The processing element **26** may be operable, configured, or programmed to perform the following functions by utilizing hardware, software, firmware, or combinations thereof.

Before normal operation begins, the processing element **26** may execute an initialization process by first initializing its own input/output ports. Then, the processing element **26** initializes the speed determining element **22** by sending a

series of command messages to the speed determining element **22** to set the format of output from the speed determining element **22** and improve its performance. The processing element **26** communicates a first command to the speed determining element **22** that sets a format of its satellite data message to an RMC message, or Recommended Minimum Specific GNSS data. This reduces the amount of data included in each satellite data message from the speed determining element **22**. The processing element **26** communicates a second command to the speed determining element **22** that decreases the time period between position fixes, which is when the speed determining element **22** determines its position, speed, and other data that is included in the satellite data message. The second command has the effect of increasing the number of satellite data messages that the speed determining element **22** can produce per second. An example of the second command sets the time period to 200 milliseconds, thereby setting the satellite data message rate to 5 times per second. The processing element **26** communicates a third command to the speed determining element **22** that increases the bit communication rate output by the speed determining element **22**. Thus, each time the speed determining element **22** outputs the satellite data message, it generates the message more quickly. Other command messages may be sent to the speed determining element **22** to further customize the data output.

An example of the RMC-format satellite data message that is output from the speed determining element **22** is shown in FIG. **5**. An explanation of the contents of the satellite data message is shown in the table of FIG. **6**. The table includes three columns: a first column that lists a plurality of fields that are included in each message, a second column that lists an example of each field, and a third column that lists a description of each field or optional values that could be included in each field. One of the fields in the satellite data message is "Speed Over Ground", which is the speed of the patrol vehicle **30** around the time that the satellite data message is generated.

Once the speed determining element **22** has been properly initialized, it communicates the satellite data message, with the format shown in FIG. **5**, to the processing element **26** and/or the memory element **24** at a rate of 5 messages per second. The processing element **26** receives the satellite data message and parses it to retrieve the value of the Speed Over Ground field, which is the patrol vehicle speed. Since the Speed Over Ground is recorded by the speed determining element **22** in units of knots, the processing element **26** converts the value to units of miles per hour (mph) and kilometers per hour (km/h or kph). Based on the value of the patrol vehicle speed, the processing element **26** sets a mode of speed detection to either "stationary", if the patrol vehicle speed is less than a first threshold speed for at least four consecutive satellite data messages, or "moving", if the patrol vehicle speed is greater than a second threshold speed for at least four consecutive satellite data messages. An exemplary first threshold speed is 1.1 mph. An exemplary second threshold speed is 3.1 mph.

The main unit **34** operates in one of three modes—a front zone mode, a rear zone mode, and a scan mode. The mode is selected by a user, typically a law enforcement officer, who selects the mode from the user interface of the main unit **34**. In the front zone mode, the processing element **26** outputs the switch control signal at a first level to set the switch **18** in the first mode such that the processing element **26** and the memory element **24** receive a plurality of front radar digital data samples from the ADC **20**. In the rear zone mode, the processing element **26** outputs the switch control signal at a second level to set the switch **18** in the second mode such that the processing element **26** and the memory element **24** receive a plurality of rear radar digital data samples from the ADC **20**. In the scan mode, the processing element **26** outputs the switch control signal at the first level to set the switch **18** in the first mode for a first period of time and then outputs the switch control signal at the second level to set the switch **18** in the second mode for a second period of time such that the processing element **26** and the memory element **24** receive the front radar digital data samples for the first period of time and the rear radar digital data samples for the second period of time. The processing element **26** then toggles the level of the switch control signal between the first level and the second level in order to toggle the mode of the switch **18** between the first mode and the second mode. Thus, the processing element **26** and the memory element **24** repeatedly receive the front radar digital data samples for the first period of time and the rear radar digital data samples for the second period of time. Typically, the first period of time is the amount of time necessary for the processing element **26** and the memory element **24** to receive a certain, predetermined number of front radar digital data samples, while the second period of time is the amount of time necessary for the processing element **26** and the memory element **24** to receive a certain, predetermined number of rear radar digital data samples.

Whether the main unit **34** is in the front zone mode, the rear zone mode, or the scan mode, once the processing element **26** and the memory element **24** receive the predetermined number of front radar digital data samples or rear radar digital data samples, the processing element **26** performs a time domain to frequency domain conversion on the time-domain-based front or rear radar digital data samples. The processing element **26** may utilize a discrete Fourier transform (DFT), a fast Fourier transform (FFT), or the like. Exemplary embodiments utilize the FFT. Thus, the predetermined number of front or rear radar digital data samples is an amount of samples necessary for the processing element **26** to perform an M-point FFT, where M is a 2^n value, such as **256**, **512**, **1024**, etc. The FFT calculation produces a plurality of frequency bins, each frequency bin associated with a bin number and having a relative magnitude value. In addition, each frequency bin may correspond, or relate, to a speed of a vehicle. A plot **46** of the result of a random FFT calculation, i.e., relative magnitude vs. frequency bin, is shown in FIG. **7**. Generally, the reflection of the radar beam off of each target vehicle **32** produces a spike **48** in the relative magnitude for a small number of adjacent frequency bins in the plot **46**—the spike **48** being values of the relative magnitude greater than a predetermined spike threshold. The processing element **26** may examine the relative magnitude associated with each frequency bin number and compare the relative magnitude with the spike threshold. If the relative magnitude is above the spike threshold for a group (e.g., four or five) of successive bin numbers, then the processing element **26** determines that the frequency bin numbers include a spike **48**. The location of the spike **48**, i.e., the numbers of the frequency bins with the relative magnitude above the spike threshold, corresponds to, or varies according to, the relative speed of the target vehicle **32**.

In addition, the reflection of the radar beam off surrounding terrain relative to the patrol vehicle **30** produces a spike **50** in the plot **46**. This must be accounted for when analyzing the relative magnitude data to determine the speeds of target vehicles **32**. The processing element **26** converts the Speed Over Ground speed value of the patrol vehicle **30** (from the

speed determining element **22**) to a frequency bin number. The processing element **26** may also create a patrol vehicle speed window **52**, which includes the bin numbers that correspond to the converted patrol vehicle speed frequency bin number plus 5 mph and minus 5 mph. The processing element **26** identifies the patrol vehicle spike **50** by determining which spike lies within the patrol vehicle speed window **52**. Hence, the processing element **26** determines that the other spikes **48** outside of the patrol vehicle speed window **52** belong to target vehicles **32**. In the exemplary plot **46** of FIG. **7**, there is a first spike that is a target vehicle spike **48** and a second spike that is a patrol vehicle spike **50** and exists within the patrol vehicle speed window **52**.

The processing element **26** converts the frequency bin numbers for each spike **48** to a target vehicle speed in units of miles per hour or kilometers per hour. In various embodiments, the processing element **26** may convert the frequency bin number with the greatest relative magnitude to a target vehicle speed for each spike **48**. If the patrol vehicle **30** is in stationary mode, then the target vehicle speed, that was just converted, is an absolute, or actual, target vehicle speed. If the patrol vehicle **30** is in moving mode, then the target vehicle speed is a speed relative to the speed of the patrol vehicle **30**. The absolute target vehicle speed is determined by further mathematical operations, such as adding the target vehicle speed to the patrol vehicle speed, subtracting the target vehicle speed from the patrol vehicle speed, or subtracting the patrol vehicle speed from the target vehicle speed. The choice of mathematical operation may depend on whether the target vehicle **32** and the patrol vehicle **30** are traveling the same direction or the opposite directions or whether the patrol vehicle **30** is traveling faster or slower than the target vehicle **32**, or alternatively, whether the target vehicle **32** is getting closer to, or moving away from, the patrol vehicle **30**. The processing element **26** may analyze phase data produced by the FFT calculation, not shown in the figures, in order to determine which mathematical operation to perform in order to determine the absolute speed of the target vehicles **32**. After analyzing the phase data, the processing element **26** determines the absolute target vehicle speed for each spike **48** in the relative magnitude data.

When the absolute speed of all of the target vehicles **32** has been determined, the processing element **26** controls the display to display the speeds. Typically, the target vehicle speed with the greatest magnitude (the strongest speed) is displayed along with the patrol vehicle speed. An example of at least a portion of the display **16** of the main unit **34** is shown in FIG. **8**. The display **16** includes a patrol vehicle speed indication **54** and a target vehicle speed indication **56**. The display **16** also includes a verification indicia **58**, in this case a check mark, that indicates the speed displayed in the patrol vehicle speed indication **54** is verified by the speed determining element **22**, which is independent from the speed of the patrol vehicle **30** provided by the patrol vehicle **30** radar Doppler return. The display **16** may further include a first label "FRONT" indicating the target vehicle **32** whose speed is displayed in the target vehicle speed indication **56** is in the front zone. The display may also include a second label "REAR", not shown in the figures, which indicates that the target vehicle **32** whose speed is displayed in the target vehicle speed indication **56** is in the rear zone. In addition, the display **16** may include a target vehicle icon **60** whose position, relative to the patrol vehicle speed indication **54**, indicates the position of the target vehicle **32** relative to the patrol vehicle **30**. For example, the target vehicle icon **60** being positioned above the patrol vehicle speed indication **54** indicates that the target vehicle **32** is in the front zone. The target vehicle icon **60** being positioned below the patrol vehicle speed indication **54** indicates that the target vehicle **32** is in the rear zone.

The processing element **26** may complete the target vehicle speed determination process multiple times per second, wherein the process includes: receiving the Speed Over Ground of the patrol vehicle **30** from the speed determining element **22**, converting the speed to units of miles per hour, receiving front or rear radar digital data samples, converting the radar digital data samples to frequency domain data, determining the patrol vehicle speed window **52**, determining frequency bin spikes **48** that are located outside the patrol vehicle speed window **52**, converting the frequency bin spikes **48** to target vehicle speeds, and controlling the display **16** to display the target vehicle speeds.

The processing element **26** receives input from the user interface of the main unit **34**. The operator (typically a law enforcement officer) may lock the speed readings, for example when the processing element **26** has determined a target vehicle speed that is over the speed limit. Locking the speed readings captures and stores the current target and patrol speed readings to prevent potentially losing the speed values that indicated the target speed was exceeding the speed limit as the target speeds update during normal operation. The processing element **26** then performs an event data storage. The event data storage may be performed in other circumstances as well, such as running a system test, an occurrence of a system error, updating of the system firmware, and so forth. The event data storage may include storing a data packet in non-volatile memory in the memory element **24** or transmitting the data packet to an external device, system, server, or the like. An example of the data packet is shown in FIG. **9** and may include a plurality of data fields. A first field is a record number which is unique for each data packet. A second field is a record type which identifies the type of event that caused the data packet to be created. In the example, the record type is "locked speeds event". A third field is a universal time when the data packet was created. A fourth field is a date when the data packet was created. A fifth field is a geolocation of the patrol vehicle **30** when the data packet was created. The geolocation may be stored in units of latitude and longitude and may be derived from the satellite data message generated by the speed determining element **22**. A sixth field is a course, or heading, of the patrol vehicle **30** when the data packet was created. The course may also be derived from the satellite data message generated by the speed determining element **22**. A seventh field is a patrol vehicle speed which is determined as described above. An eighth field is a target vehicle speed which is also determined as described above. A ninth field is an operating mode describing the mode of speed detection and direction of travel of the target vehicle **32** relative to the patrol vehicle **30**. In the example, the mode is "moving same direction".

The remote control **28** generally provides control of the operation of the traffic radar system **10**. The remote control **28** may be packaged in a hand held package, may be mounted on the steering wheel or center console of the patrol vehicle **30**, or may be implemented as a software application running on a mobile electronic device, such as a smart phone, a tablet computer, or the like. The remote control **28** may communicate with the main unit **34** through a wired cable connection or wirelessly through infrared (IR) signaling or radio frequency (RF) signaling, such as Bluetooth™, cellular, WiFi, etc. The remote control **28** may include a

keypad-type interface which allows the operator to set the operating mode and other functions of the traffic radar system **10**.

FIGS. **10**A and **10**B depicts a listing of at least a portion of the steps of an exemplary computer-implemented method **100** for determining speeds of target vehicles **32** using a traffic radar system **10**. The steps may be performed in the order shown in FIGS. **10**A and **10**B, or they may be performed in a different order. Furthermore, some steps may be performed concurrently as opposed to sequentially. In addition, some steps may be optional or may not be performed. In various embodiments, the steps are performed by the processing element **26** of the main unit **34**.

Referring to step **101**, a satellite data message is received from the speed determining element **22**. An example of the satellite data message is shown in FIG. **5**. And an explanation of the contents of the satellite data message is shown in the table of FIG. **6**.

Referring to step **102**, the satellite data message is processed to determine a speed of the patrol vehicle **30**. The satellite data message is parsed to find a Speed Over Ground field, and the value of the field is retrieved. The Speed Over Ground value may be in units of knots. The Speed Over Ground value is converted to units of miles per hour (mph) and kilometers per hour (km/h or kph) and set as the patrol vehicle speed.

Referring to step **103**, a mode of speed detection is set according to the patrol vehicle speed. Based on the value of the patrol vehicle speed, the mode of speed detection is set to either "stationary", if the patrol vehicle speed is less than 1.1 mph for at least four consecutive satellite data messages, or "moving", if the patrol vehicle speed is greater than 3.1 mph for at least four consecutive satellite data messages.

Referring to step **104**, digitized data samples from the front radar transceiver **12** and the rear radar transceiver **14** are received. The ADC **20** digitizes the front radar output electronic signal to generate the front radar digital data samples and the rear radar output electronic signal to generate the rear radar digital data samples. The digital data samples may be received by the processing element **26** and stored in the memory element **24**. Depending on the operating mode of the main unit **34** (front zone mode, rear zone mode, or scan mode), a continuous stream of front radar digital data samples is received, a continuous stream of rear radar digital data samples is received, or alternating streams of front radar digital data samples and rear radar digital data samples are received.

Referring to step **105**, a time domain to frequency domain conversion of the digital data samples is performed. The digital data samples are time-domain data. An exemplary conversion utilizes the FFT. Once enough digital data samples to perform an M-point FFT, where M is a 2^n value, such as **256**, **512**, **1024**, etc. have been received, the FFT is performed. The FFT calculation produces a plurality of frequency bins, each frequency bin being numbered and having a relative magnitude value. A plot **46** of the result of a random FFT calculation, i.e., relative magnitude vs. frequency bin, is shown in FIG. **7**. Generally, the reflection of the radar beam off of each target vehicle **32** produces a spike **48** in the relative magnitude for a small number of adjacent frequency bin in the plot **46**—the spike **48** being values of the relative magnitude greater than a predetermined spike threshold. The relative magnitude associated with each frequency bin number is compared with the spike threshold. If the relative magnitude is above the spike threshold for a predetermined quantity (e.g., four or five) of bin numbers in a row, then it is determined that the frequency bin numbers include a spike **48**. The location of the spike **48**, i.e., the numbers of the frequency bins with the relative magnitude above the spike threshold, corresponds to, or varies according to, the speed of the target vehicle **32**.

Referring to step **106**, a patrol vehicle speed window **52** corresponding to the patrol vehicle speed is determined. The reflection of the radar beam off of the surrounding terrain produces a spike **50** in the plot **46**. This must be accounted for when analyzing the relative frequency bin data to determine the speeds of target vehicles **32**. The processing element **26** converts the Speed Over Ground speed value of the patrol vehicle **30** (from the speed determining element **22**) to a frequency bin number. The patrol vehicle speed window **52**, as shown in FIG. **7**, includes bin numbers that correspond to the converted patrol vehicle speed frequency bin number plus 5 mph and minus 5 mph.

Referring to step **107**, the frequency bins outside of the patrol vehicle speed window **52** with relative magnitudes above the spike threshold are determined. The frequency bins outside of the patrol vehicle speed window **52** may be scanned or examined in succession, with the relative magnitude of each frequency bin being compared to the spike threshold. The successive frequency bin numbers that are greater than the spike threshold are determined to be part of a spike **48** and are associated with the speed of a target vehicle **32**.

Referring to step **108**, the target vehicle frequency bins are converted into target vehicle speeds. The frequency bin numbers for each spike **48** are converted to a target vehicle speed in units of miles per hour or kilometers per hour. In various embodiments, the frequency bin number with the greatest relative magnitude for each spike **48** is converted to a target vehicle speed.

Referring to step **109**, the target vehicle speeds are converted to absolute target vehicle speeds. If the patrol vehicle **30** is in stationary mode, then the target vehicle speed is an absolute, or actual, target vehicle speed. If the patrol vehicle **30** is in moving mode, then the target vehicle speed is a speed relative to the speed of the patrol vehicle **30**. The absolute target vehicle speed is determined by further mathematical operations, such as adding the target vehicle speed to the patrol vehicle speed, subtracting the target vehicle speed from the patrol vehicle speed, or subtracting the patrol vehicle speed from the target vehicle speed. The choice of mathematical operation may depend on whether the target vehicle **32** and the patrol vehicle **30** are traveling the same direction or the opposite directions or whether the patrol vehicle **30** is traveling faster or slower than the target vehicle **32**. Phase data produced by the FFT calculation, not shown in the figures, may be analyzed in order to determine which mathematical operation to perform in order to determine the absolute speed of the target vehicles **32**. After analyzing the phase data, the absolute target vehicle speed is determined for each spike **48** in the relative magnitude data.

Referring to step **110**, the target vehicle speed and the patrol vehicle speed are displayed. Typically, the target vehicle speed with the greatest magnitude (the strongest speed) is displayed. An example of at least a portion of the display **16** with the patrol vehicle speed indication **54** and the target vehicle speed indication **56** is shown in FIG. **8**.

Referring to step **111**, data is stored in the memory element **24**. Event data storage may be performed when the speed readings on the display **16** are locked or in other circumstances as well, such as running a system test, an occurrence of a system error, updating of the system firmware, and so forth. The event data storage may include storing a data packet in non-volatile memory in the memory

element **24** or transmitting the data packet to an external device, system, server, or the like. An example of the data packet is shown in FIG. **9** and may include the data fields therein.

In this description, references to "one embodiment", "an embodiment", or "embodiments" mean that the feature or features being referred to are included in at least one embodiment of the technology. Separate references to "one embodiment", "an embodiment", or "embodiments" in this description do not necessarily refer to the same embodiment and are also not mutually exclusive unless so stated and/or except as will be readily apparent to those skilled in the art from the description. For example, a feature, structure, act, etc. described in one embodiment may also be included in other embodiments, but is not necessarily included. Thus, the current technology can include a variety of combinations and/or integrations of the embodiments described herein.

Although the present application sets forth a detailed description of numerous different embodiments, it should be understood that the legal scope of the description is defined by the words of the claims set forth at the end of this patent and equivalents. The detailed description is to be construed as exemplary only and does not describe every possible embodiment since describing every possible embodiment would be impractical. Numerous alternative embodiments may be implemented, using either current technology or technology developed after the filing date of this patent, which would still fall within the scope of the claims.

Throughout this specification, plural instances may implement components, operations, or structures described as a single instance. Although individual operations of one or more methods are illustrated and described as separate operations, one or more of the individual operations may be performed concurrently, and nothing requires that the operations be performed in the order illustrated. Structures and functionality presented as separate components in example configurations may be implemented as a combined structure or component. Similarly, structures and functionality presented as a single component may be implemented as separate components. These and other variations, modifications, additions, and improvements fall within the scope of the subject matter herein.

Certain embodiments are described herein as including logic or a number of routines, subroutines, applications, or instructions. These may constitute either software (e.g., code embodied on a machine-readable medium or in a transmission signal) or hardware. In hardware, the routines, etc., are tangible units capable of performing certain operations and may be configured or arranged in a certain manner. In example embodiments, one or more computer systems (e.g., a standalone, client or server computer system) or one or more hardware modules of a computer system (e.g., a processor or a group of processors) may be configured by software (e.g., an application or application portion) as computer hardware that operates to perform certain operations as described herein.

In various embodiments, computer hardware, such as a processing element, may be implemented as special purpose or as general purpose. For example, the processing element may comprise dedicated circuitry or logic that is permanently configured, such as an application-specific integrated circuit (ASIC), or indefinitely configured, such as an FPGA, to perform certain operations. The processing element may also comprise programmable logic or circuitry (e.g., as encompassed within a general-purpose processor or other programmable processor) that is temporarily configured by software to perform certain operations. It will be appreciated that the decision to implement the processing element as special purpose, in dedicated and permanently configured circuitry, or as general purpose (e.g., configured by software) may be driven by cost and time considerations.

Accordingly, the term "processing element" or equivalents should be understood to encompass a tangible entity, be that an entity that is physically constructed, permanently configured (e.g., hardwired), or temporarily configured (e.g., programmed) to operate in a certain manner or to perform certain operations described herein. Considering embodiments in which the processing element is temporarily configured (e.g., programmed), each of the processing elements need not be configured or instantiated at any one instance in time. For example, where the processing element comprises a general-purpose processor configured using software, the general-purpose processor may be configured as respective different processing elements at different times. Software may accordingly configure the processing element to constitute a particular hardware configuration at one instance of time and to constitute a different hardware configuration at a different instance of time.

Computer hardware components, such as communication elements, memory elements, processing elements, and the like, may provide information to, and receive information from, other computer hardware components. Accordingly, the described computer hardware components may be regarded as being communicatively coupled. Where multiple of such computer hardware components exist contemporaneously, communications may be achieved through signal transmission (e.g., over appropriate circuits and buses) that connect the computer hardware components. In embodiments in which multiple computer hardware components are configured or instantiated at different times, communications between such computer hardware components may be achieved, for example, through the storage and retrieval of information in memory structures to which the multiple computer hardware components have access. For example, one computer hardware component may perform an operation and store the output of that operation in a memory device to which it is communicatively coupled. A further computer hardware component may then, at a later time, access the memory device to retrieve and process the stored output. Computer hardware components may also initiate communications with input or output devices, and may operate on a resource (e.g., a collection of information).

The various operations of example methods described herein may be performed, at least partially, by one or more processing elements that are temporarily configured (e.g., by software) or permanently configured to perform the relevant operations. Whether temporarily or permanently configured, such processing elements may constitute processing element-implemented modules that operate to perform one or more operations or functions. The modules referred to herein may, in some example embodiments, comprise processing element-implemented modules.

Similarly, the methods or routines described herein may be at least partially processing element-implemented. For example, at least some of the operations of a method may be performed by one or more processing elements or processing element-implemented hardware modules. The performance of certain of the operations may be distributed among the one or more processing elements, not only residing within a single machine, but deployed across a number of machines. In some example embodiments, the processing elements may be located in a single location (e.g., within a home environment, an office environment or as a server

farm), while in other embodiments the processing elements may be distributed across a number of locations.

Unless specifically stated otherwise, discussions herein using words such as "processing," "computing," "calculating," "determining," "presenting," "displaying," or the like may refer to actions or processes of a machine (e.g., a computer with a processing element and other computer hardware components) that manipulates or transforms data represented as physical (e.g., electronic, magnetic, or optical) quantities within one or more memories (e.g., volatile memory, non-volatile memory, or a combination thereof), registers, or other machine components that receive, store, transmit, or display information.

As used herein, the terms "comprises," "comprising," "includes," "including," "has," "having" or any other variation thereof, are intended to cover a non-exclusive inclusion. For example, a process, method, article, or apparatus that comprises a list of elements is not necessarily limited to only those elements but may include other elements not expressly listed or inherent to such process, method, article, or apparatus.

The patent claims at the end of this patent application are not intended to be construed under 35 U.S.C. § 112(f) unless traditional means-plus-function language is expressly recited, such as "means for" or "step for" language being explicitly recited in the claim(s).

Although the invention has been described with reference to the embodiments illustrated in the attached drawing figures, it is noted that equivalents may be employed and substitutions made herein without departing from the scope of the invention as recited in the claims.

Having thus described various embodiments of the invention, what is claimed as new and desired to be protected by Letters Patent includes the following:

The invention claimed is:

1. A traffic radar system comprising:

a first radar transceiver configured to transmit and receive radar beams from a front zone corresponding to an area in front of a patrol vehicle and to generate a first electronic signal corresponding to the received radar beam;

a second radar transceiver configured to transmit and receive radar beams from a rear zone corresponding to an area behind the patrol vehicle and to generate a second electronic signal corresponding to the received radar beam;

a speed determining element configured to determine and output a speed of the patrol vehicle and not receive signals or data from the patrol vehicle; and

a processing element configured to

receive a plurality of digital data samples derived from one of either the first or second electronic signals,

receive the speed of the patrol vehicle from the speed determining element,

perform a time domain to frequency domain conversion on the digital data samples creating a plurality of frequency bins, each frequency bin associated with a frequency bin number, having a relative magnitude value, and corresponding to a speed of a vehicle,

convert the speed of the patrol vehicle to a frequency bin number,

form a patrol vehicle speed window that includes a range of frequency bin numbers having the frequency bin number of the converted patrol vehicle speed as a center of the range,

determine at least one group of successive frequency bin numbers outside of the patrol vehicle speed window whose relative magnitude is greater than a spike threshold value,

convert one frequency bin number in each group to the relative speed of one target vehicle, and

convert the relative speed of the target vehicle to an absolute speed using the speed of the patrol vehicle.

2. The traffic radar system of claim **1**, wherein the processing element is further configured to perform one of the following depending the directions of travel of the patrol vehicle and the target vehicle:

add the relative speed of the target vehicle to the speed of the patrol vehicle to determine the absolute speed of the target vehicle,

subtract the relative speed of the target vehicle from the speed of the patrol vehicle to determine the absolute speed of the target vehicle, and

subtract the speed of the patrol vehicle from the relative speed of the target vehicle to determine the absolute speed of the target vehicle.

3. The traffic radar system of claim **1**, wherein the processing element is further configured to determine whether the patrol vehicle is moving or stationary and convert the relative speed of the target vehicle to the absolute speed using the speed of the patrol vehicle only when the patrol vehicle is moving.

4. The traffic radar system of claim **1**, wherein the speed determining element outputs the patrol vehicle speed in a stream of messages and the processing element is further configured to determine that the patrol vehicle is moving when the patrol vehicle speed is greater than a first threshold value for a predetermined number of successive messages.

5. The traffic radar system of claim **1**, wherein the speed determining element outputs the patrol vehicle speed in a stream of messages and the processing element is further configured to determine that the patrol vehicle is stationary when the patrol vehicle speed is less than a second threshold value for a predetermined number of successive messages.

6. The traffic radar system of claim **1**, wherein the speed determining element is further configured to receive and process radio frequency signals from a global navigation satellite system.

7. The traffic radar system of claim **1**, further comprising a display configured to display a plurality of speeds, and the processing element is further configured to control the display to display the speed of the patrol vehicle and the absolute speed of the target vehicle.

8. The traffic radar system of claim **1**, further comprising an analog to digital converter configured to receive the first electronic signal and the second electronic signal and output a plurality of front radar digital data samples and a plurality of rear radar digital samples.

9. A traffic radar system comprising:

a first radar transceiver configured to transmit and receive radar beams from a front zone corresponding to an area in front of a patrol vehicle and to generate a first electronic signal corresponding to the received radar beam;

a second radar transceiver configured to transmit and receive radar beams from a rear zone corresponding to an area behind the patrol vehicle and to generate a second electronic signal corresponding to the received radar beam;

a speed determining element configured to receive and process radio frequency signals from a global navigation satellite system to determine and output a speed of the patrol vehicle; and

a processing element configured to

receive a plurality of digital data samples derived from one of either the first or second electronic signals,

receive the speed of the patrol vehicle from the speed determining element,

perform a time domain to frequency domain conversion on the digital data samples creating a plurality of frequency bins, each frequency bin associated with a frequency bin number, having a relative magnitude value, and corresponding to a speed of a vehicle,

convert the speed of the patrol vehicle to a frequency bin number,

form a patrol vehicle speed window that includes a range of frequency bin numbers having the frequency bin number of the converted patrol vehicle speed as a center of the range,

determine at least one group of successive frequency bin numbers outside of the patrol vehicle speed window whose relative magnitude is greater than a spike threshold value,

convert one frequency bin number in each group to the relative speed of one target vehicle, and

convert the relative speed of the target vehicle to an absolute speed using the speed of the patrol vehicle.

10. The traffic radar system of claim **9**, wherein the processing element is further configured to perform one of the following depending the directions of travel of the patrol vehicle and the target vehicle:

add the relative speed of the target vehicle to the speed of the patrol vehicle to determine the absolute speed of the target vehicle,

subtract the relative speed of the target vehicle from the speed of the patrol vehicle to determine the absolute speed of the target vehicle, and

subtract the speed of the patrol vehicle from the relative speed of the target vehicle to determine the absolute speed of the target vehicle.

11. The traffic radar system of claim **9**, wherein the processing element is further configured to determine whether the patrol vehicle is moving or stationary and convert the relative speed of the target vehicle to the absolute speed using the speed of the patrol vehicle only when the patrol vehicle is moving.

12. The traffic radar system of claim **9**, wherein the speed determining element outputs the patrol vehicle speed in a stream of messages and the processing element is further configured to

determine that the patrol vehicle is moving when the patrol vehicle speed is greater than a first threshold value for a predetermined number of successive messages, and

determine that the patrol vehicle is stationary when the patrol vehicle speed is less than a second threshold value for a predetermined number of successive messages.

13. The traffic radar system of claim **12**, wherein the processing element is further configured to set a mode of speed detection to moving when the processing element determines that the patrol vehicle is moving or to stationary when the processing element determines that the patrol vehicle is stationary.

14. The traffic radar system of claim **9**, further comprising a display configured to display a plurality of speeds, and the processing element is further configured to control the display to display the speed of the patrol vehicle and the absolute speed of the target vehicle.

15. The traffic radar system of claim **9**, further comprising an analog to digital converter configured to receive the first electronic signal and the second electronic signal and output a plurality of front radar digital data samples and a plurality of rear radar digital samples.

* * * * *