(19) German
Patent and Trade Mark Office

(10) **DE 10 2012 024 876 A1** 2014.06.26

(12) **Patent Application**

(21) File number: **10 2012 024 876.8**
(22) Filing date: **12/19/2012**
(43) Publication date: **06/26/2014**

(51) Int. Cl.: ***H01M 10/54*** (2006.01)
H01M 10/0525 (2010.01)

(71) Applicant
Electrocycling GmbH, 38644, Goslar, DE;
Volkswagen Aktiengesellschaft, 38440, Wolfsburg, DE

(72) Inventor:
Petermann, Matthias, 38685, Langelsheim, DE;
Sellin, Guido, 37339, Neuendorf, DE

(56) Established prior art:

DE 60 2005 001 937		**T2**
US	**5 303 872**	**A**
EP	**1 333 522**	**A1**
WO	**2010/ 149 611**	**A1**

A search request pursuant to Sec. 43 (1) sentence 1 of the German Patent Act (PatG) Law has been filed.

The following information was taken from the documents submitted by the applicant

(54) Title: **Device and method for transferring transport-critical electrolyte cells into a transportable state**

(57)) Abstract: The invention relates to a system and a method for transferring transport-critical electrolyte cells into a transportable state.
It is provided that the system comprises a device for transferring transport-critical electrolyte cells into a transportable state. The device comprises a comminuting device (200) for comminuting the electrolyte of the electrolyte cells in a comminution chamber of the comminuting device (200), a feeding device (100) for feeding the electrolyte cells into the comminution chamber, a material discharge device (400) for discharging comminuted electrolyte cells from the comminution chamber, an inert gas supply device (300) for generating an atmosphere substantially containing inert gas at least in the comminution chamber and in the material discharge device (400), as well as a gas extraction device (240) for extracting the atmosphere contained in the comminution chamber. The gas extraction device (240) comprises a gas purification device (220) and the feeding device (100) for feeding the electrolyte cells to be comminuted into the comminution chamber. The device is characterized in that the material discharge device (400) has an opening for the gas-tight attachment of a transportable collection device (500) for collecting comminuted cells.

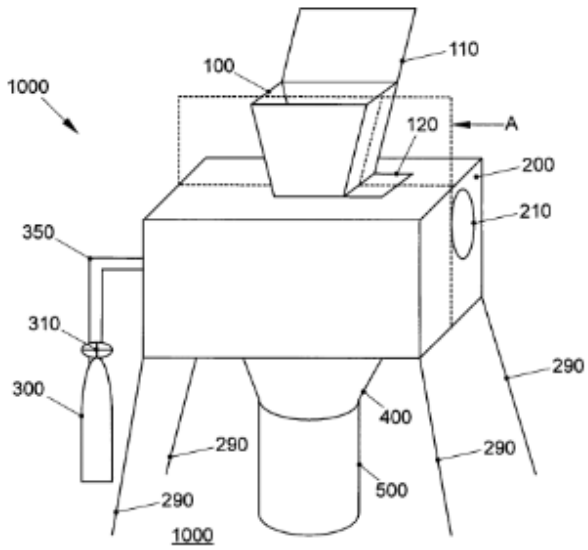

URT v. Duesenfeld
IPR2024-00887
Ex. 2004-001

Description

[0001] The invention relates to a device and a method for transferring transport-critical electrolyte cells into a transportable state.

[0002] Electrolyte cells, for example lithium-ion based battery cells, are increasingly being used as reliable energy storage devices in portable electrical devices or in automotive applications. If electrolyte cells are damaged, however, chemical compounds with a high environmental and health hazard potential can develop from the electrolyte interacting with the electrodes, the housing and/or the ambient air. Comparable hazards can arise from overaged electrolyte cells.

[0003] Therefore, even intact electrolyte cells may only be transported as hazardous material, unless they are installed in a motor vehicle. Defective or overaged electrolyte cells may only be transported following a case-by-case examination by a technical expert and often only with an exemption approval under certain conditions, unless they are in a motor vehicle. If the vehicle itself is defective, the transportability of electrolyte cells in the vehicle must also be reviewed by a technical expert on a case-by-case basis. Defective electrolyte cells, overaged electrolyte cells and electrolyte cells that cannot be transported for other reasons are therefore also referred to as transport-critical electrolyte cells.

[0004] Electrolyte cells that are unusable for regular operation are shredded, i.e. comminuted, for recycling purposes. When electrolyte cells are comminuted in a normal atmosphere, the electrolyte or a solvent containing the electrolyte can easily ignite due to the electrical charges released and the resulting electric arcs. The resulting fire can then easily spread to other flammable cell components, such as plastic separators. In lithium-ion cells, such a fire is accompanied by an exposure to hydrogen fluoride.

[0005] European patent specification 1 733 451 describes a method comprising the dry comminution of a lithium system at an ambient temperature and in an inert atmosphere and a lithium recovery by aqueous hydrolysis. A rotor and rotary shears are accommodated in a sealed container which is inerted by means of gas. Gases that escape during the comminution are treated by flushing with water and neutralization with sodium carbonate. European patent specification 0 649 912 relates to a method for recovering reusable metals from a nickel-hydrogen cell.

[0006] The invention is based on the task of providing a device and a method that renders any transport safety testing of transport-critical electrolyte cells superfluous.

[0007] According to the invention, this task is solved by providing a device with the features of claim 1, a transportable collection device with the features of claim 4, a system with the features of claim 6 and a method with the features of claim 7.

[0008] The device according to the invention is suitable for transferring transport-critical electrolyte cells into a transportable state and comprises a comminuting device for comminuting the electrolyte cells in a comminution chamber of the comminuting device, a hopper for feeding electrolyte cells into the comminution chamber and a material discharge device for discharging comminuted electrolyte cells from the comminution chamber. The comminution chamber can be separated from the hopper in a gas-tight manner by means of a feed gate. A material discharge device, which is also comprised in the device, is used to discharge comminuted electrolyte cells from the comminution chamber, an inert gas supply device, which is also comprised, is used to generate an atmosphere substantially containing inert gas at least in the comminution chamber and in the material discharge device, and a gas extraction device, which is also comprised, is used to extract the gas contained in the comminution chamber, wherein the gas extraction device comprises a gas purification device. The device is characterized in that the material discharge device comprises an opening for a gas-tight attachment of a transportable collection device for collecting comminuted cells.

[0009] The device allows for a gas-tight connection of such a device to a transportable collection device. Thus, electrolyte cells adapted to the size of the collection device can be safely comminuted in an inert gas atmosphere and transferred to the collection device. In addition, recyclable materials in the comminuted electrolyte cells are accessible for recovery.

[0010] In a preferred embodiment of the invention, it is provided that the material discharge device comprises at least one dusting device for dusting the comminuted cells with a deactivation powder.

Duesenfeld Ex. 2004-002

[0011] In that case, only deactivated electrolyte cell material enters the collection device, which can then be detached from the device after the inert gas atmosphere has been extracted, sealed and transported as hazardous material without a special transport safety test or exemption permit. This facilitates transportation across national borders in particular.

[0012] In this or another embodiment, the device is transportable and comprises a power supply device which can provide a location-independent power supply.

[0013] The transportable collection device according to the invention is characterized in that the collection device is provided for transferring transport-critical lithium-ion cells into a transportable state with the device according to the invention and in that it contains a predetermined amount of lithium hydroxide solution, wherein the amount of lithium hydroxide solution contained and a volume of the collection device are matched such that an amount of fluorine contained in an amount of comminuted lithium ion cells that fit into the collection device is completely bound and/or deactivated by the amount of lithium hydroxide solution in the collection device.

[0014] In a preferred embodiment of the transportable collection device according to the invention, the volume of the collection device is additionally matched to a volume of the hopper, so that the amount of comminuted lithium-ion cells that fit into the collection device corresponds to an amount of uncomminuted lithium-ion cells that fit into the hopper.

[0015] The system according to the invention for transferring transport-critical lithium-ion cells into a transportable state comprises the device according to the invention and the transportable collection device according to the invention.

[0016] The method according to the invention comprises the use of the device according to the invention, wherein a transportable collection device is attached in a gas-tight manner to the opening of the material discharge device. The method further comprises the following steps:
Generating the substantially inert gas-containing atmosphere in the comminution chamber, in the material discharge device and in the collection device, filling the hopper with a batch of electrolyte cells, closing the hopper in a gas-tight manner, feeding the electrolyte cells into the comminution chamber, comminuting the cells in the inert gas-containing atmosphere and discharging the comminuted cells into the collection device in the inert gas-containing atmosphere, extracting the inert gas-containing atmosphere, separating the collection device from the opening and closing the collection device.

[0017] In a preferred embodiment, it is provided that the method further comprises the following steps, which are carried out prior to generating the substantially inert gas-containing atmosphere:
Filling the collection device with a solution suitable for deactivating and/or binding an electrolyte of the batch, wherein a volume of the collection device and a volume of the hopper are matched such that an amount of electrolyte cells that fits into the hopper matches the volume of the collection device after the comminution, and wherein the amount of the solution used is sufficient for deactivating and/or binding an amount of electrolytes contained in the batch, and attaching the transportable collection device to the opening in a gas-tight manner.

[0018] In another preferred embodiment, it is provided that the method further comprises the following step, which is carried out in the substantially inert gas containing atmosphere:
Dusting the comminuted cells with a deactivation powder, wherein the amount of deactivation powder used for the dusting is enough to deactivate a quantity of electrolytes contained in the batch.

[0019] The inert gas may be a single inert or non-reactive gas or a mixture of such gases. In one embodiment of the invention, nitrogen is used as the inert gas.

[0020] In one embodiment, the collection device is a plastic barrel which is attached to the opening in a gas-tight manner by means of a sealing flange and a quick-change device.

[0021] If the comminution chamber comprises a measuring device for measuring an oxygen concentration in the comminution chamber, an oxygen concentration in the comminution chamber can, for example, be measured repeatedly during the generation of the atmosphere substantially containing inert gas and compared to a limit value. If the measured oxygen concentration falls below the limit value, the generation of the substantially inert gas-containing atmosphere can then be terminated. The limit value for the oxygen concentration can be 6%, for example.

Duesenfeld Ex. 2004-003

[0022] Further preferred embodiments of the invention result from the other features mentioned in the subclaims.

[**0023]** The invention is explained below with the help of embodiments on the basis of the associated drawings.

[0024] Fig. 1 shows a schematic view of a first embodiment of the system according to the invention,

[0025] Fig. 2 shows a schematic view of a section of the first embodiment of the system according to the invention,

[0026] Fig. 3 shows schematic view of a section of a second embodiment of the system according to the invention, and

[0027] Fig. 4 shows a schematic flow diagram of an embodiment of the method according to the invention.

[0028] In the schematic view of a first embodiment of the system **1000** according to the invention shown in **Fig.** 1, a feeding device **100** in the form of a rectangular hopper is located above a comminuting device **200.** A cover **110** makes it possible to separate the feeding device **100** from the exterior in a gas-tight manner. Furthermore, a feed gate **120** arranged between the feeding device **100** and the comminuting device **200** and shown as a gate valve makes it possible to separate a filling chamber of the feeding device **100** to be separated from a comminution chamber of the comminuting device **200** in a gas-tight manner or for the two chambers to be connected in a gas-flow-capable manner. The comminuting device **200** comprises an exhaust gas opening **210** and a gas inlet, not shown, to which a gas source **300** for inert gas or an inert gas mixture is connected via a gas line **350.** The comminuting device **200** stands on legs **290.** A material discharge device **400** is arranged below the comminuting device **200**, which connects the commination chamber inside the comminuting device **200**, which is not visible in **Fig.** 1, to a filling chamber of a collection device **500** in a gas-flow-capable manner and thus seals it off from the exterior in a gas-tight manner.

[0029] Fig. 2 shows the first embodiment sectioned along the plane A in **Fig.** 1. As shown, the filling chamber of the hopper **100** is located above the commination chamber visible in **Fig.** 2. For reasons of clarity, the feed gate **120** in **Fig.** 2 is, unlike in **Fig.** 1, schematically shown as movable to another side. The comminution chamber comprises the schematically shown cutting disks **230**. As shown, the gas line **350** continues into the comminuting device and thus connects the inert gas source **300** to the comminution chamber in such a way that gas can flow. The exhaust gas opening, which is not shown in **Fig.** 2, is connected to the comminution chamber via an activated carbon filter **220.** A controllable valve **310** makes it possible to control the amount of inert gas that flows into the chamber. The controllable valve **310** can be designed to allow an inflow of ambient air instead of an inflow of inert gas. A further valve **250** designed for the control signal connection can be actuated to control the quantity of gas or gas mixture that exits from the exhaust gas opening. In the embodiment, an oxygen concentration measuring device **270** measures an oxygen concentration in the comminution chamber and forwards the measured value to a control device **260** with a comparator, which compares the measured value with a limit value of, for example, 10%, preferably 6% or less. In the process, the control device **260** generates a control signal to close the valve **350** connected to the control device **260** when the measured value falls below the limit value and controls the valve **350** accordingly. In particular, the control device **260** can be designed such that it carries out the control described above in a first operating mode and a further control in a second operating mode, wherein the control device **260** compares the measured value with another limit value of, for example, 20% or 21% in the second operating mode. In the second operating mode, the control device **260** generates a control signal to open the valve **350** connected to the control device **260** to the exterior when the value falls below the other limit value and controls the valve **350** accordingly. When the other limit value is reached or exceeded in the second operating mode, the valve **350** is closed again.

[0030] In the first embodiment, a solution for binding free ions is in the collection device **500** shown in the shape of a barrel. Different solutions can be adapted to different electrolytes. For example, fluorine ions released during the comminution of lithium-ion cells can be bound in an aqueous lithium hydroxide solution.

[0031] In a second embodiment, there are nozzles in the material discharge device **450**. The nozzles **450** are used for spraying or dusting the cell fragments that fall from the cutting unit, the cutting unit comprising the cutting disks **230.** The cell fragments are sprayed or dusted with a deactivating powder or

Duesenfeld Ex. 2004-004

aerosol, which provides binding partner ions to the ions released from the electrolyte of the cells. This is shown schematically in **Fig.** 3.

[0032] In one embodiment of the method, defective and/or damaged lithium-ion battery cells are filled into a hopper **100**. The hopper **100** of this embodiment can be sealed from the exterior in a gas-tight manner, for example by means of a gas pressure damper supporting cover **110**, which remains open in the open state and thus allows for an easy feeding. The gas-tight sealing of the hopper **100** when the cover **110** is closed is achieved, for example, by means of a sealing flange. A feed gate **120** closes a filling chamber of the hopper **100** in a gas-tight manner with regard to a comminution chamber of a comminuting device **200**. In the case of the arrangement provided according to the invention, the filling chamber is arranged above the comminution chamber, so that opening the feed gate **120** causes the cells in the filling chamber to fall downward into the comminution chamber.

[0033] In one embodiment, the comminuting device **200** is driven by two separate electric motors by means of toothed belts and a multi-stage spur gear, which are supplied with voltage by a fuel-driven transportable generator. The multi-stage spur gear can have approximately three stages and run in an oil bath to reduce the need for maintenance. The electric motors jointly drive the secondary cutting unit and the main cutting unit via the spur gearbox. Each of the cutting units comprises a pair of cutting disks **230.** The cells falling into the comminution chamber from the filling chamber are comminuted by the cutting units while they are running. The comminution products, i.e. the cell fragments, fall out of the cutting units at the bottom and through an opening.

[0034] In the embodiment, a plastic barrel **500** is attached to this opening in a gas-tight manner by means of a sealing flange and quick-change device. In this embodiment, the plastic barrel contains a predetermined amount of LiOH solution **510**, which is suitable for deactivating a corresponding amount of fluorine released by conducting salt by binding it as lithium fluoride. The corresponding amount of fluorine corresponds to a maximum number of cells that can be deactivated in a shredded form by the LiOH solution. The wateriness of the LiOH solution is selected so that a saturation limit of the water for solvents of the electrolyte is not exceeded.

[0035] In another embodiment, cell fragments falling from the cutting units fall through a region in which dusting nozzles **450** are provided on the side, which dust the falling cell fragments with a powder suitable for deactivating the fluorine before they fall through the opening into the plastic barrel **500**, which does not have to contain a LiOH solution in this other embodiment.

[0036] It is possible to select a volume of the filling chamber of the hopper **100** such that a quantity of cells in a shredded form that fits into the filling space fits into the plastic barrel **500.** In the case of a deactivation with a LiOH solution, the volume of the filling chamber can also be adapted to the quantity of cells whose fluorine content can be safely bound with the LiOH solution. This adaptation can be cell type-related. In one embodiment, the collection device is designed with different dimensions and filling quantities so that suitable collection devices are available for battery cells of different hybrid or electric vehicle battery types, which are also only dimensioned for fragments of exactly one battery of this type, for example. The filling device and the shredder can then be designed accordingly so that the device can transfer secondary batteries from electric or hybrid vehicles that were involved in traffic accidents, for example, individually in a transportable and recyclable state.

[0037] The comminution chamber of the shredder and chambers in gas exchange with said comminution chamber, such as the plastic drum, can be filled with nitrogen from a pressurized cylinder filled with nitrogen (N_2), for example, after having been sealed from the exterior in a gas-tight manner by means of a gas flushing system, so that an inert, i.e., a low-reactive or non-reactive atmosphere is created in the comminution chamber. Any gas or gas mixture previously present in the chambers to be gassed, for example air, is displaced by the incoming inert gas. An extraction device can support the displacement.

[0038] If the plastic drum holds more comminuted cells than can fit into the hopper without being comminuted, the feed gate between the hopper and the comminution chamber makes it possible for an already existing inert atmosphere in the comminution chamber to be substantially maintained if the hopper is first filled with cells and then sealed against the exterior in a gas-tight manner before the feed gate is opened.

[0039] The hopper can, for example, be pressure-resistant and made of stainless steel.

Duesenfeld Ex. 2004-005

[0040] As shown in **Fig.** 4, one embodiment of the method according to the invention begins with step S1, the gas-tight connection of the collection drum to the comminuting device. Then, with the feed gate closed, the control device of the system is set to a first operating state, for example by manual operation, in which the control device activates a valve depending on the oxygen concentration measured by the measuring probe in step S2, with which an inflow of inert gas can be controlled. For this purpose, a control device of the system compares the current measured value with a limit value in step S3 and determines whether the value has fallen below the limit value. If the value does not fall below the limit value, the control device controls the valve in step S4 so that it opens or remains open. Steps S2, S3 and S4 are then repeated until it is determined in step S3 that the value has fallen below the limit value. This is followed by step S5, where the cover of the hopper is opened while the feed gate is closed and the electrolyte cells to be comminuted are filled into the hopper. The cover is then closed in step S6 before the feed gate is opened in step S7. When the electrolyte cells to be comminuted have fallen into the comminution chamber, the feed gate is closed again in step S8. This is followed by step S9, in which the cells in the comminution chamber are comminuted, with the comminution products falling into the collection drum. In an optional step S10, they are dusted with a powder or sprayed with a liquid that binds and deactivates free ions. If a powder is used, liquid can be bound as well. Step S11 checks whether the drum is completely filled. If it is determined in step S11 that the collection drum is not yet completely filled, steps S1 to S9 or S10 are repeated. If, on the other hand, it is determined in step S11 that the collection drum is completely full, the control device of the system enters a second operating state in which the control device activates an ambient air valve and an extraction device depending on the oxygen concentration measured by the measuring probe in step S12, with which the extraction of gas from the comminution chamber and the inflow of ambient air can be controlled. For this purpose, a control device of the system compares the current measured value with another, higher limit value in step S13 and determines whether the value has fallen below the other, higher limit value. If the value falls below the higher limit value, the control device controls the ambient air valve in step S14 so that it opens or remains open. At the same time, in step S15, the extraction device is controlled so that the gas mixture in the comminution chamber is extracted and released into the ambient atmosphere via an activated carbon filter. Steps S12, S13, S14 and S15 are then repeated until the higher limit value is reached or exceeded in step S13. This is followed by step S16, in which the drum is separated from the system and closed with a cover and a quick-release clamp.

List of reference symbols

100	Feeding device/hopper
110	Cover
120	Feed gate
200	Comminuting device/shredder
210	Exhaust gas opening
220	Activated carbon filter
230	Cutting disks
240	Gas extraction device
250	Control signal connection
260	Control device
270	Oxygen concentration sensor
300	Inert gas source
310	Gas flow connection to the atmosphere
350	Gas line
400	Material discharge device
450	Dusting nozzles
500	Collection device/collection drum
510	LiOH solution
1000	System
S1	Connecting the collection drum to the comminuting device in a gas-tight manner
S2	Measuring the oxygen concentration
S3	Comparing measured value and limit value
S4	Opening or keeping open the inert gas supply valve
S5	Opening the cover of the hopper with the feed gate closed at the same time
S6	Closing the cover of the hopper
S7	Opening the feed gate
S8	Closing the feed gate
S9	Comminuting the cells
S10	Spraying or dusting the cells with deactivating powder or mist
S11	Comparing the filling capacity of the collection drum with the quantity of cells already filled in
S12	Measuring the oxygen concentration
S13	Comparing the measured value and the other, higher limit value
S14	Opening or keeping open the valve for ambient air supply
S15	Switching on or keeping the extraction device switched on
S16	Disconnecting the collection drum from the comminuting device and closing the collection drum

Duesenfeld Ex. 2004-006

CITATIONS INCLUDED IN THE DESCRIPTION

This list of documents listed by the applicant was generated automatically and is included solely for the information of the reader. The list is not part of the German patent or utility model application. The DPMA accepts no liability for any errors or omissions.

Cited patent literature

- EP 1733451 [0005]
- EP 0649912 [0005]

Duesenfeld Ex. 2004-007

Claims

1. Device for transferring transport-critical electrolyte cells into a transportable state, the device being a comminuting device (**200)** for comminuting the electrolyte cells in a comminution chamber enclosed by the comminuting device (**200**), a feeding device (**100)** for feeding electrolyte cells into the comminution chamber, wherein the comminution chamber can be separated from the feeding device (**100)** in a gas-tight manner by means of a feed gate (**120**), a material discharge device (**400)** for discharging comminuted electrolyte cells from the comminution chamber, an inert gas supply device (**300**, **350**) for generating a substantially inert gas-containing atmosphere at least in the comminution chamber and in the material discharge device (**400**), and a gas extraction device (**240**) for extracting the atmosphere contained in the comminution chamber, the gas extraction device (**240**) comprising a gas purification device (**220**), **characterized in that** the material discharge device (**400**) comprises an opening for the gas-tight attachment of a transportable collection device (**500**) for collecting comminuted cells.

2. Device according to claim 1, **characterized in that** the material discharge device comprises at least one dusting device (**450**) for dusting the comminuted cells with a deactivation powder.

3. Device according to claim 1 or 2, **characterized in that** the device is transportable and comprises a power supply device which facilitates a location-independent power supply.

4. Transportable collection device (**500**) **characterized in that** the collection device for transferring transport-critical lithium-ion cells into a transportable state is provided with a device according to any of the preceding claims and contains a predetermined amount of lithium hydroxide solution (**510**), wherein said amount of lithium hydroxide solution and a volume of the collection device are matched such that an amount of fluorine contained in an amount of comminuted lithium ion cells fitting the collection device is completely bound and/or deactivated by the amount of lithium hydroxide solution in the collection device.

5. Transportable collection device according to claim 4, **characterized in that** the volume of the collection device is additionally matched to a volume of the feeding device, so that the quantity of comminuted lithium-ion cells that fits into the collection device corresponds to a quantity of uncomminuted lithium-ion cells that fit into the hopper.

6. System (**1000**) for transferring transport-critical lithium-ion cells into a transportable state, comprising a device according to any of claims 1 to 3 and a transportable collection device according to claim 4 or 5.

7. Method for transferring transport-critical electrolyte cells into a transportable state, **characterized in that** the method comprises the use of a device according to any of claims 1 to 3, wherein a transportable collection device is attached in a gas-tight manner to the opening of the material discharge device, and wherein the method comprises the following steps: generating (S2, S3, S4) the substantially inert gas-containing atmosphere in the comminution chamber, in the material discharge device and in the collection device, filling (S5) the feeding device with a batch of electrolyte cells, closing (S6) the feeding device in a gas-tight manner, feeding (S7) the electrolyte cells into the comminution chamber, comminuting (S9) the cells in the inert gas-containing atmosphere and discharging the comminuted cells into the collection device in the inert gas-containing atmosphere, extracting (S12, S13, S14, S15) the inert gas-containing atmosphere, separating (S16) the collection device from the opening and closing the collection device.

8. Method according to claim 7, **characterized in that** the method further comprises the following steps, which are carried out prior to the generation of the substantially inert gas-containing atmosphere: filling the collection device with a solution suitable for deactivating and/or binding an electrolyte of the batch, wherein a volume of the collection device and a volume of the feeding device are matched such that an amount of electrolyte cells fitting into the feeding device matches the volume of the collection device after the comminution, and wherein the amount of the solution used for filling the container is sufficient for deactivating and/or binding an amount of electrolytes contained in the batch, and attaching the transportable collection device to the opening in a gas-tight manner.

9. Method according to claim 7, **characterized in that** the method further comprises the following step, which is carried out in the substantially inert gas-containing atmosphere: dusting (S10) the comminuted cells with a deactivation powder, wherein the amount of the deactivation powder used

Duesenfeld Ex. 2004-008

for the dusting is sufficient to deactivate an amount of electrolytes contained in the batch.

10. Method according to any of claims 7 to 9, **characterized in that**, during the generation of the atmosphere substantially containing inert gas, an oxygen concentration in the comminution chamber is measured (S2) and compared (S3) with a limit value, and in that the generation of the atmosphere substantially containing inert gas is terminated if the measured oxygen concentration falls below the limit value.

4 pages of drawings to follow

Duesenfeld Ex. 2004-009

Attached drawings

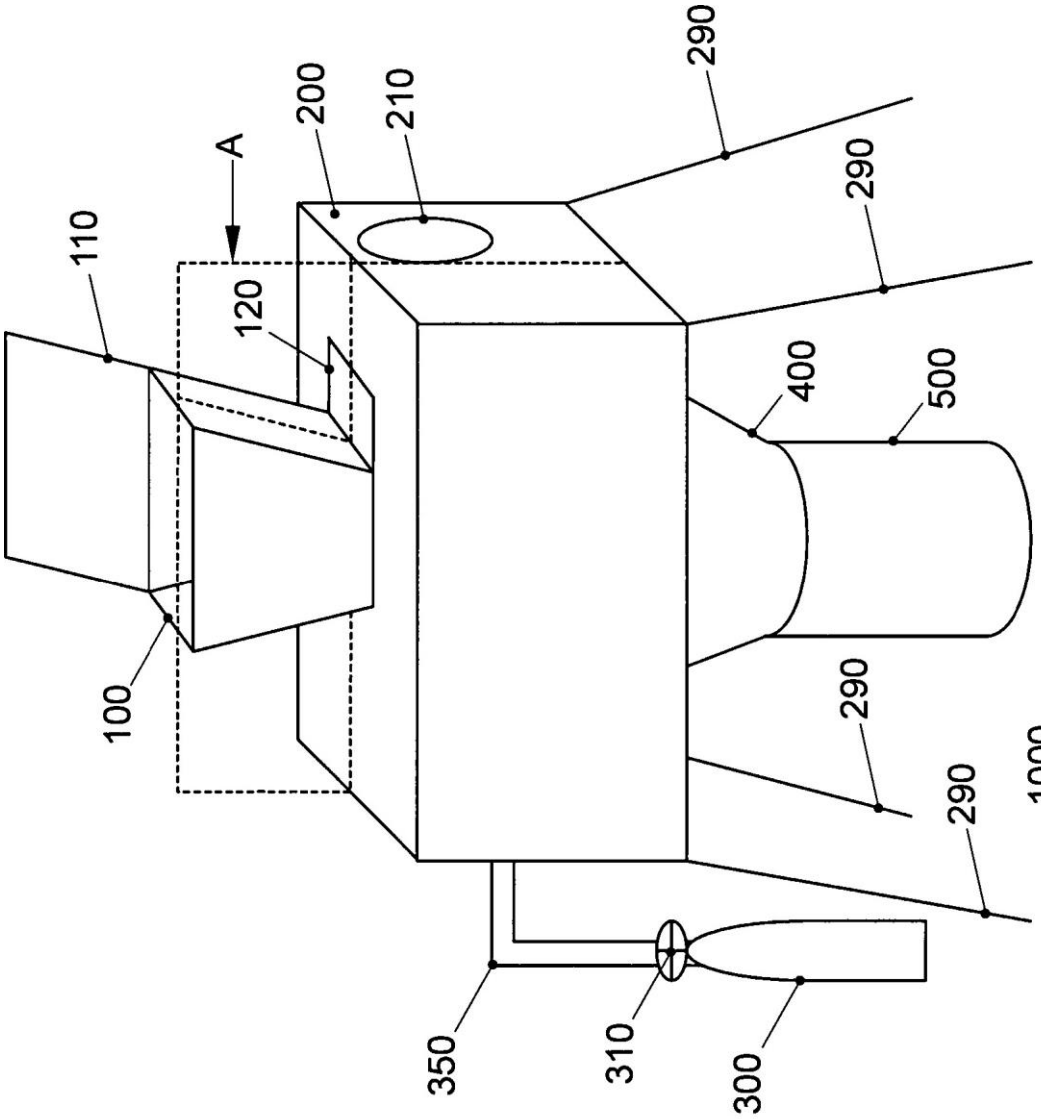

FIG. 1

Duesenfeld Ex. 2004-010

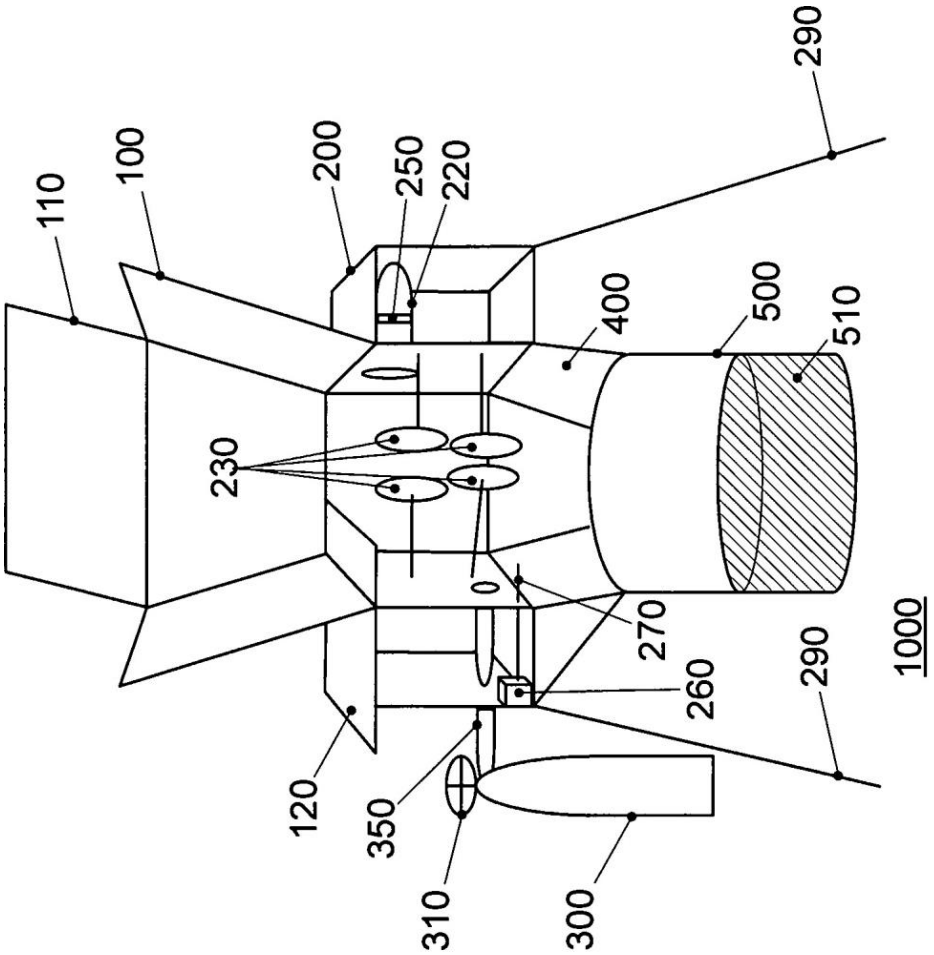

FIG. 2

Duesenfeld Ex. 2004-011

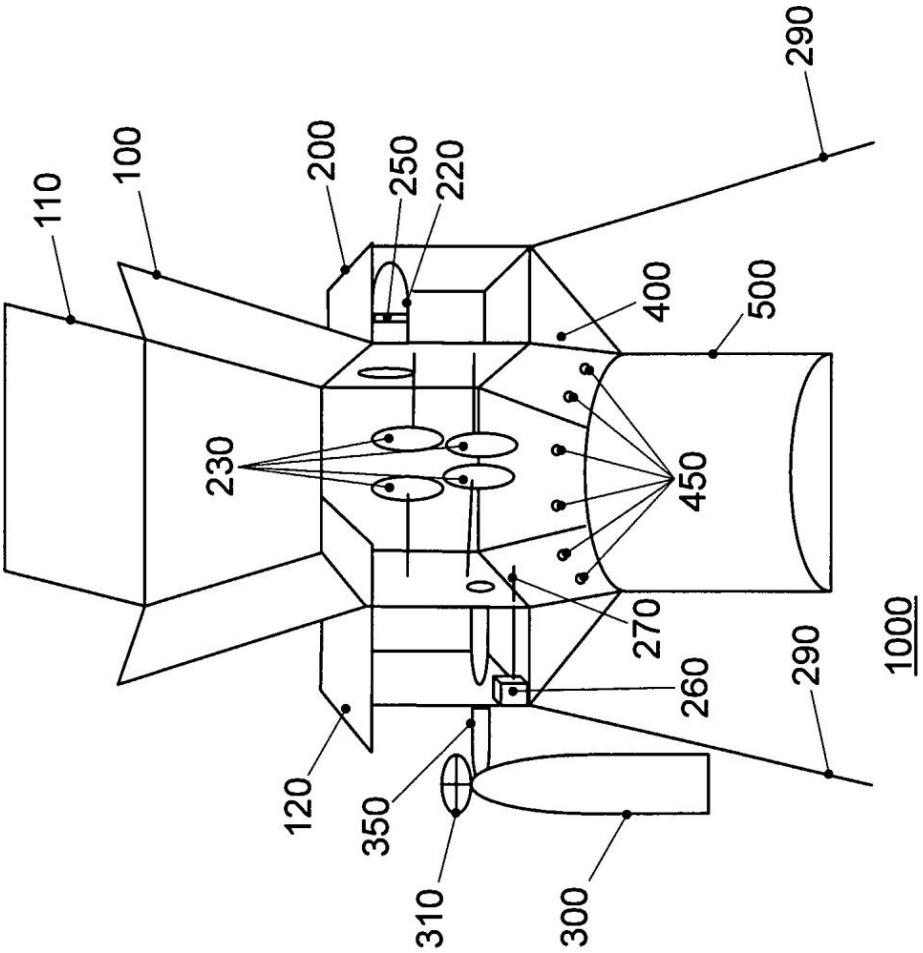
110
100
200
250
220
290
400
500
230
450
270
260
290
1000
120
350
310
300

FIG. 3

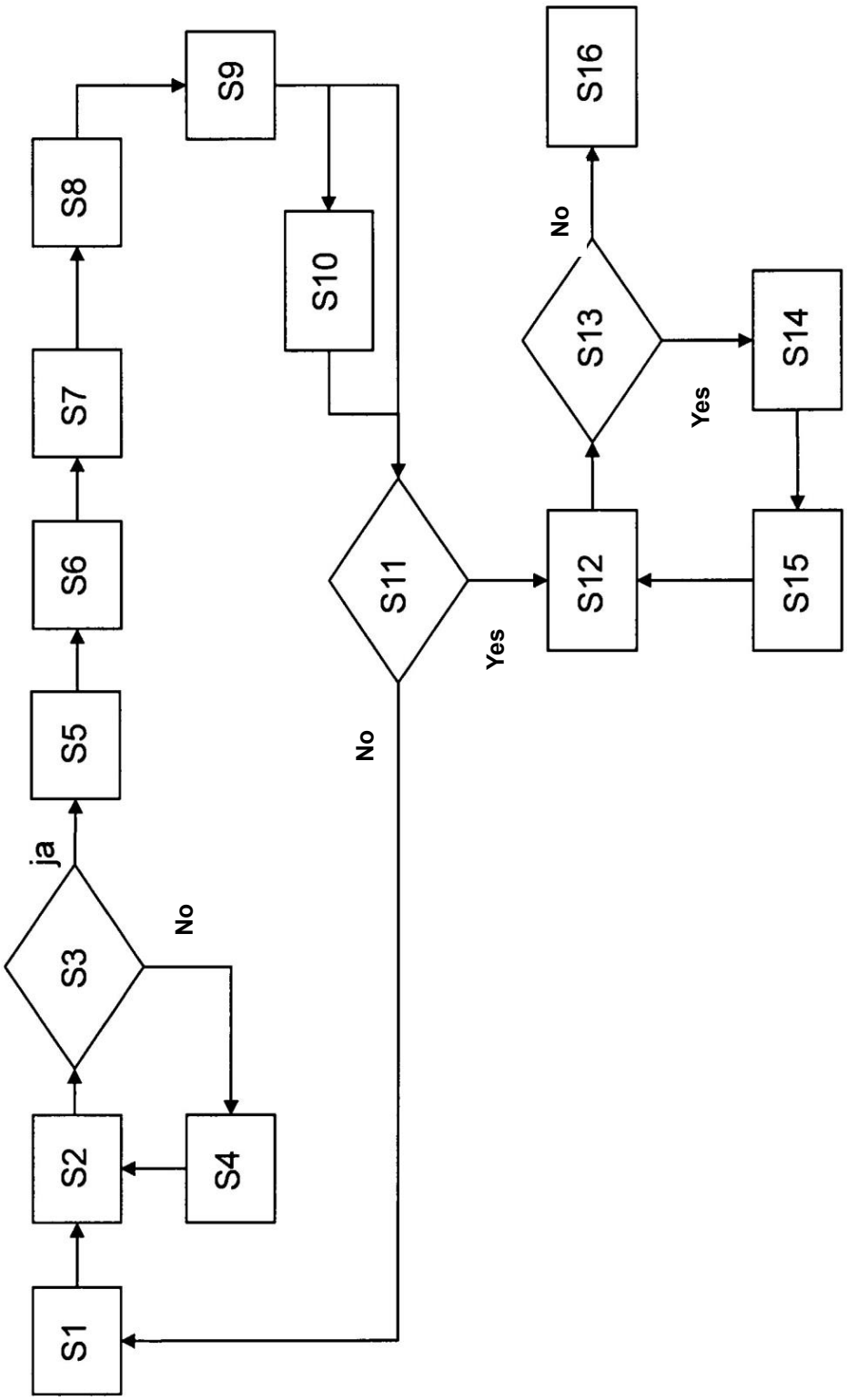

FIG. 4

Duesenfeld Ex. 2004-013