Design and Development of a Rotary Airlock Valve for using in Continuous Pyrolysis Process to Improve Performance

N. Somsuk
Industrial engineering department,
Faculty of engineering, Eastern Asia University
Pathumthani, Thailand
e-mail: nisakorn@eau.ac.th

T. Wessapan, S. Teekasap
Mechanical engineering department,
Faculty of engineering, Eastern Asia University
Pathumthani, Thailand
e-mail: teerapot@eau.ac.th, teekasap@hotmail.com

***Abstract*— A rotary airlock valve is a widely used device in material handling processes. It can be applied to the conveying of pyrolyzing wood chips into pyrolysis ovens for wood vinegar production. In a pyrolysis process, the process conducted in a closed system, under limited amount of air and high temperature conditions, and then a rotary airlock valve is provided for conveying pyrolyzing wood chips to be pyrolyzed. This research aims to design and develop a rotary airlock valve to achieve a uniform feed and an airlock operation (feeding without leaking), and consequently to improve its performance, for using in continuous pyrolysis process, in which a continuous material feeding is required. Due to the better airlock the better pyrolysis product yields. The rotary airlock valve is designed by concept of minimum clearance between the blade tips and the housing, along with using a rotor with the adjustable and replaceable blade tips mounted on blades welded to a rotor shaft, and a packing seal, in the closed rotor, and thus minimize leakage. According to the airlock performance test results of the developed rotary airlock valve, its performance improved approximately 60% when compared to the conventional counterpart. In this paper, conclusions for future research are described.**

Keywords- rotary airlock valve; performance improvement; continuous pyrolysis process.

I. INTRODUCTION

A rotary airlock valve is a widely used device in material handling industrial processes [1]. It is used to convey material continually, and maintain a constant air pressure difference between the inlet and outlet ports which is done with the help of a blade rotor, while sealing in air leaks.

Pyrolysis is one of modern techniques for the conversion of biomass into useful liquid and gaseous fuels [2]. Our previous researches, a batch pyrolysis oven was designed and developed for wood vinegar production [3], [4]. Since, the productivity of the batch pyrolysis process was limited by oven size. In order to improve its productivity, a continuous pyrolysis process, with continuous material feeding, can be used instead of a batch counterpart. The other our research focuses on the development of the continuous pyrolysis oven that is in process of developing. That is why, design and development of such an appropriate continuous feeding device is needed to use with the process which will be able to operate completely in near future.

Rotary airlock valves are applied to the pyrolysis process in continuous production of wood vinegar (pyrolysis products), as continuous feeding devices. Since a continuous pyrolysis process is conducted in a closed system, under limited amount of air, pressure and high temperature conditions. Therefore, an airlock valve can be provided for feeding biomaterial to be pyrolysed, as preventing the air leakage in pyrolyzing chamber.

An improperly designed and applied rotary airlock valve can lead to poor efficiency, extra maintenance and operator manpower, low yields of product, equipment wear and replacement, and lost production due to process shutdowns [5].

As effectively operating the process, heat and pressure within the pyrolysis oven should be maintained a constant air pressure difference between the inlet and outlet ports as much as possible by determining an appropriate and minimum clearance between blade tips and the housing. A correctly clearance ensures efficient production and consistent material conveying. Too large a clearance allows air and material to pass through, causing excess waste, a pressure drop across the line, and low yields of wood vinegar (or pyrolysis product), while too small a clearance allows material to become trapped between the housing and rotor tips, hastening valve wear and possibly binding the rotor [6].

Due to the better airlock the better pyrolysis product yields, therefore, this research aims to design and develop a rotary airlock valve to improve its performance, for using in continuous pyrolysis process.

The remainder of this paper is organized as follows. Section II reviews the literature on rotary airlock valve and its components, and working principle. Section III presents the design concept and the design and development of a rotary airlock valve. Section IV then presents the test and results. Finally, Section V presents a conclusion, the limitations of our study, and opportunities for future research.

II. BACKGROUND THEORY

A. A Rotary Airlock Valve

A rotary airlock valve (sometimes called a rotary valve or rotary feeder) can operate as an airlock, a feeder, or a combination feeder-airlock in a pressure conveying system. A rotary airlock valve acts as an airlock or lock to the air, where an air seal is needed, between the inlet and outlet ports,

978-1-4244-8758-5/10/$26.00©2010 IEEE

URT v. Duesenfeld
IPR2024-00887
Ex. 2030-001

while moving material in a continuous rotating motion through its pockets, which are formed between the blades.

There are two main types of rotary valve: First, the more common "drop-through" rotary valve, which is used mainly for relatively free-flowing materials (e.g. grain, rice, and powder, granulated fertilizer, alumina, coffee beans, sugar); Second, the "blow-through" rotary valve, which is used mainly for more cohesive or sticky powders (e.g. cocoa powder, flour, milk powder) that may not discharge properly from a drop-through rotary valve (i.e. fine powder compacts and sticks to the inside of the wedge-shaped rotor pockets) [8]. Each of these rotary airlock valve types have advantages and disadvantages with regard to feeding rate sensitivity, feed rate capacity, construction difficulty, operation simplicity, maintenance, and cost [9].

B. Working Principle of a Rotary Airlock Valve

Rotary airlock valves are commonly used in industrial and agricultural applications as a component in a bulk material handling system [1]. Components of a rotary airlock valve include a housing and endplates (which form a cylindrical cavity with an inlet and outlet) and a rotor with blades (also called vanes) mounted on a rotor shaft, and packing seals and bearings [6]. A rotor which is supported by bearings is typically driven by small an internal combustion engine or an electric motor. Then the rotor shaft is turned, causing the rotor to rotate inside the housing. As they turn, the rotor pockets, which are the space between adjacent blades, become rotating pockets [5]. The material being handled enters the pockets at the top, through the inlet port, travels around in a rotating motion, and exits at the bottom, or through the outlet port [5], [7]. As the blades and pockets continue to turn, material continues to be moved from inlet port to outlet port or from top to bottom, in a rotating motion. The schematic diagram of rotary airlock feeder is shown in Fig. 1.

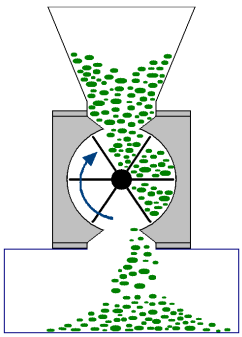

Figure 1: Schematic diagram of rotary airlock feeder

In operation, material enters the inlet and drops into a rotor pocket. As the blades rotate, the material is carried in the pocket toward the outlet. To achieve a uniform feed and airlock (feeding without leaking), shaft seals prevent air and material from leaking into or out of the valve [6].

C. Variables Related to Rotary Airlock Performance

The key variables related to rotary airlock performance are as follows:

- Number of blades
- Type of rotors
- Wear and abrasion of the rotary airlock valves

Number of blades: The more blades the rotor has, the better its ability to seal pressure differences between the inlet and outlet ports [5]. The pockets are largest on the 6 vane rotor, and decrease in size as more vanes are added [5].

Type of rotors: There are two types of rotors: an open-end rotor assembly, and a closed-end rotor assembly.

Wear and abrasion of the rotary airlock valves: wear due to abrasion can be divided into two types – surface drag abrasion and pneumatic assisted abrasion. Surface drag abrasion is that which is caused by the moving, rubbing, pushing, or dragging of abrasive materials along and/or between surfaces, creating erosion to these surfaces [5].

In many cases, the root cause of the problems, such as inadequate feed rate capacity, unstable flow conditions, conveying pipeline blockages and excessive wear inside the rotary valve, is the leakage (loss) of air through the rotary valve (due to the clearances) [8]. The amount of rotary valve leakage depends on many factors, such as pressure, rotor clearances, material properties, and etc. [10]. An airlock is a precision machined device where the clearances between the rotor and the housing are 0.004 to 0.005 inch. These clearances do wear out over time, resulting in increased leakages [8]. Therefore, the construction material considerations are taken seriously.

III. THE DESIGN AND DEVELOPMENT OF A ROTARY AIRLOCK VALVE

A. Concepts in Design of the Rotary Airlock Valve Components

The airlock application considerations are not to be taken lightly. While simple by design, airlocks are a very important element in material conveying and processing systems. Because an improperly applied airlock can lead to poor efficiency, extra maintenance and operator manpower, product degradation, equipment wear and replacement, and lost production due to process shutdowns [5].

The concepts in design of the rotary airlock valve components to improve its performance and be able to perform properly are showed in Table 1.

Duesenfeld Ex. 2030-002

TABLE 1. THE CONCEPTS IN DESIGN OF EACH COMPONENT OF THE ROTARY AIRLOCK VALVE

Component	The concept in design
Rotor shaft	Should tolerate high temperature and pressure. Keep shaft deflection to a minimum.
Blade	Should tolerate high temperature and pressure.
Flange	Should tolerate high temperature and pressure.
Housing	In a drop-through valve body, a full-length inspection panel allows access to the side of the valve to clean out foreign material that may have jammed the rotor, with removing the panel also permits accurate adjustment of rotor tips to the valve body, compensating for wear. Without a panel, the valve must be removed in order to set tips.
Packing seal	Concept of minimum air leakage around the gap between rotor shaft and bearing housing
Closed blade endplate	Concept of being type of closed blade.
Adjustable and replaceable blade tip	Concept of minimum clearance between the blade tips and the drop-through housing, by adjusting blade tips to have the clearance minimized. Concept of minimum replacement parts when damaged, no need to replace rotor blade set, to save the maintenance cost.

B. The Rotary Airlock Valve Designed

The developed rotary airlock valve has six pockets and it has a rotor diameter of 12 inches, a rotor length of 17 inches, and a square inlet dimension of 6 inches by 6 inches. The clearance between the rotor and the housing is approximately 0.004 inch. To vary the speed of the rotary airlock valve, a three phase frequency inverter was used to change the power frequency and three speeds were used: 26, 38.5 and 46 rpm.

The rotary airlock valve developed is shown in Fig. 2. Components in the rotary airlock valve, as shown in Fig. 3, include a housing and endplates (which form a cylindrical cavity with an inlet and outlet) and a rotor with blades mounted on a rotor shaft. The rotor is supported by bearings, and a motor and drive turn the rotor shaft, causing the rotor to rotate inside the housing. The material of construction of each component is described in the legend of Fig. 3 as well.

Figure 2: The rotary airlock valve developed

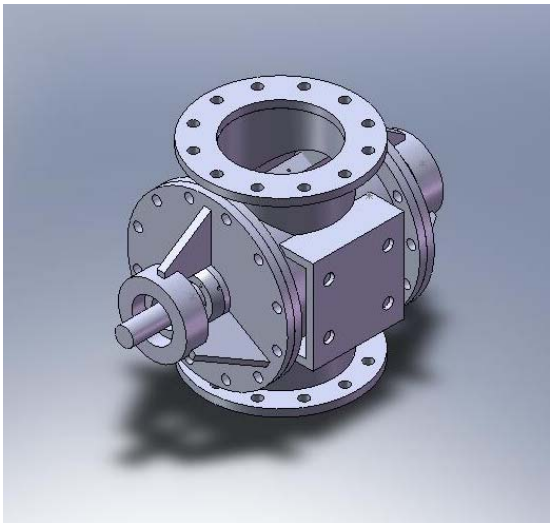

External view

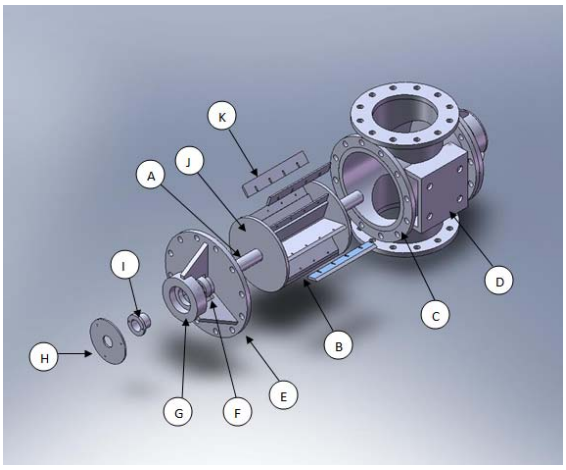

Exploded view

Legend:

	Component	Material of construction
A	Rotor shaft	High carbon steel pipe, diameter 42 mm
B	Blade	Stainless steel- high temperature resistance of thickness 16 mm
C	Flange	Stainless steel - high temperature resistance
D	Drop-through housing	Ductile iron, gray cast iron of thickness 40, and 60 mm
E	Endplate	Cast iron
F	Seal housing	Carbon steel
G	Bearing housing	SKF Bearing 2-6308RS1
H	Bearing cap	Carbon steel
I	Packing seal	Packing seal for 8 mm
J	Closed blade endplate	Carbon steel
K	Adjustable and replaceable blade tip	Brass sheet of thickness 3 mm and width 40 mm

Figure 3: An rotary airlock valve (with drop-through housing)

Duesenfeld Ex. 2030-003

IV. THE PRELIMINARY TEST AND RESULTS

The developed rotary airlocks to achieve a uniform feed and feeding without leaking, by concept of minimum clearance between the blade tips and the housing, and the rotary airlock valve is still able to perform properly, and testing facilities is the key to achieving optimal performance. Once we have the valve test results, we can design and build the best rotary airlock valve.

A variety of test runs were carried out and some comparison test results between the modified rotary airlock valve and a conventional counterpart were performed. Materials used in testing are sawdust and bagasse. The tests are performed following three topics.

1. The test for evaluating airlock performance, at the rotary speed of 0 rpm.
2. The test for evaluating airlock performance, at the rotary speed of 26, 38.5 and 46 rpm.
3. The test for evaluating material handling capacity, at the rotary speed of 26, 38.5 and 46 rpm.

A. Equipments for Ttesting and Measuring

1. Pulley 20, 25 and 35 cm diameter
2. V belt pulley B65 B70 and B75
3. Pressure Gauge (0~7 kg/cm^2)
4. Tachometer
5. Alternating current (AC) Motor, Single phase, 220 V, 4.3 A, 0.5 HP, 1,450 rpm.
6. Air compressor

B. Testing Procedures for Evaluating Airlock Performance

- The test for evaluating airlock performance, at the rotary speed of 0 rpm.

1. Design and construct the top lid of the developed rotary airlock valve.
2. Install pressure gauge and air fill valve on the top lid.
3. Lock the rotor shaft to prevent shaft movement while compressing air.
4. Compress air from initial pressure or 0 bar to 0.5 bar or 50 kPa, from the top.
5. Detect the length of time the pressure takes to drop from 0.5 to 0 bar.
6. Test again in the same manner, but change the pressure from 0.5 to 1 and 1.5 bar respectively.

- The test for evaluating airlock performance, at the rotary speed of 26, 38.5 and 46 rpm.

1. Design and construct the top and bottom lid of the developed rotary airlock valve.
2. Install pressure gauge and air fill valve on the top lid.
3. Run the rotor shaft at 30 rpm. 26, 38.5 and 46 rpm.
4. Compress air from initial pressure or 0 bar to 1 bar, from both top and bottom.
5. As pressure dropping through the top and bottom, detect the length of time the pressure takes to drop from 1 to 0 bar.
6. Test again, but change the rotor speed from 26 to 38.5 and 46 rpm respectively.

- The test for evaluating material handling capacity, at the rotary speed of 26, 38.5 and 46 rpm.

1. Design and construct hopper, and then equip with the rotary airlock valve.
2. Run the motor and adjust its speed as designed.
3. Drop the material, which is bagasse, through the hopper, with filling efficiency 100%, and then observe if the rotary airlock valve can operate normally or not.
4. Observe the rotation of the motor and its speed if it is working as designed or not.
5. Weight the material released from a pocket opening.
6. Follow step 2 through 5 again, but change the speed to 26, 38.5 and 46 rpm.
7. Test again in the same manner, but change material from bagasse to sawdust.

C. The Test Results

Figure 4 shows the lines representing the relation between the pressure as dropping from the leakage of the sealing system and a length of time that the pressure takes to drop, in which a length of time varies as a result of change in the pressure dropping.

The graph shows the length of time the pressure takes to drop from 1.5 to 0 bar, as pressure dropping. The average length of time that the rotary airlock valve can hold the pressure until the pressure drop to 0 bar is 40-50 minutes. The average length of time depends on the sealing system of the valve and the rotor speed used. The higher rotor speed causes the larger leakage.

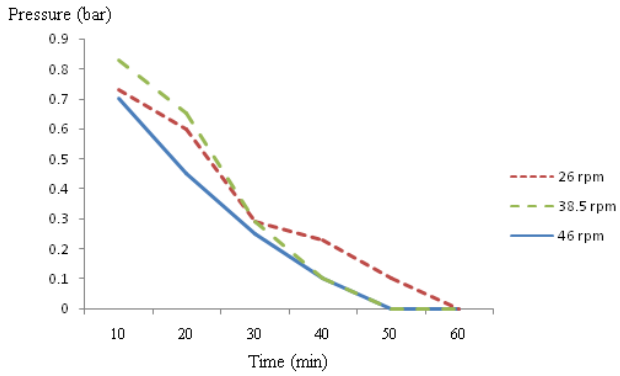

Figure 4: The relation between a length of time and the pressure as dropping, at the speed of 46 rpm.

Duesenfeld Ex. 2030-004

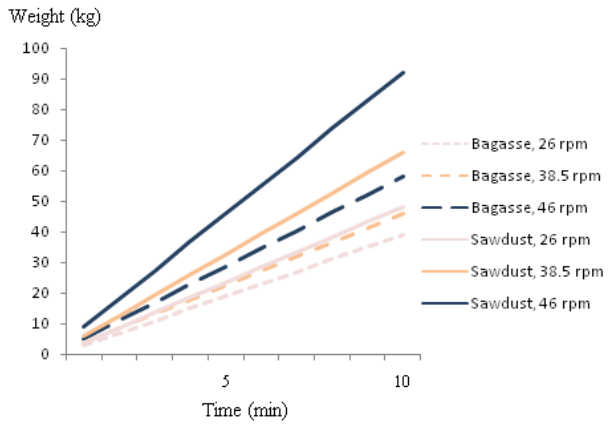

Figure 5: Comparison of the material handling capacity for bagasse and sawdust, at rotor speed of 26, 38.5 and 46 rpm.

The test results for evaluating material handling capacity through the rotary airlock valve or the volume of material released in Fig. 5 can be seen that the straight lines representing the relation between a length of time taking and the volume of material released, in which a slope of the line means material handling capacity. The best material handling capacity for both bagasse and sawdust is at the speed of 46 rpm. At the same rotor speed, the material handling capacity for sawdust is higher than bagasse. It is because the particle size of sawdust is smaller than bagasse, then it can give the better material handling capacity. Moreover, the results also correspond with the conventional rotary airlock valve which has the size as same as the developed one.

V. THE ANALYSIS AND CONCLUSION

A. Summary of Experiments

The developed rotary airlock valve was used efficiently with two types of particulate materials (sawdust and bagasse). In evaluating airlock performance, we take into account the leakage as air passes through rotary airlock valves, both still and operating conditions. According to the test results for evaluating airlock performance: at the rotary speed of 0 rpm, the average airlock performance is 0.8 bar, while the airlock performance of the conventional counterpart is 0.5 bar; and at the rotary speed of 26, 38.5 and 46 rpm, the pressure dropping varies conversely as a result of change in the rotor speed. In conclusion, according to the performance test results of the designed rotary airlock valve, its airlock performance improved approximately 60% when compared to the conventional counterpart.

According to the test results for evaluating material handling capacity, using two types of materials namely sawdust and bagasse, at the rotary speed of 26, 38.5 and 46 rpm, the best material handling capacity, for both bagasse and sawdust, is at the speed of 46 rpm. At the same rotor speed, the material handling capacity for sawdust is higher than bagasse. It is because the particle size of sawdust is smaller than bagasse, then it can give the better material handling capacity. So, the material handling capacity depends on the rotor speed and the particle size of material used.

B. The Limitations and Future Research

In this paper, we designed and developed a rotary airlock valve for continuous pyrolysis process, by which the continuous pyrolysis process has not operated yet; its system is just in the process of developing the continuous pyrolysis oven. Therefore an economic analysis can not be performed accurately. The tests are performed separately in some topics: The test for evaluating airlock performance as both still and operating conditions; and the test for evaluating material handling capacity. In future research, the test with the full operating system of the continuous pyrolysis process should be performed, and the maintenance plan of this device should be set up as well.

ACKNOWLEDGMENT

The authors would like to thank Eastern Asia University and Asso. Prof. Dr. Sombat Teekasap for financial support throughout the research project. We also thank to Nattapong Keawkampang, Krissana Pachrwong, and Pirun Ritsumroeng who help us on this research.

REFERENCES

[1] J. Yao, C.-H. Wang, E. W. C. Lim and J. Bridgwater, 2006 "Granular attrition in a rotary valve: Attrition product size and shape", *Chemical Engineering Science*, vol. 61, pp. 3435 – 3451.

[2] T. Bridgwater, 2006, "Review biomass for energy", *Journal of the Science of Food and Agriculture*, vol. 86, pp. 1755–1768.

[3] T. Wessapan, S. Sutthisong, N. Somsuk, K. Hussaro and S. Teekasap., "A Development of Pyrolysis Oven for Wood Vinegar Production", Proceedings of the Third GMSARN International Conference 2008 on Sustainable Development: Issues and Prospects for the Greater Mekong Sub region, 12-14 November 2008, Kunming, China.

[4] N. Somsuk, T. Wessapan, S. Sutthisong, K. Hussaro, S. Teekasap, "Development of a Heat Exchanger Used With Pyrolysis Oven in Wood Vinegar Production," 2009, Proceedings of the 6th International New Exploratory Technologies Conference, 12-14 October 2009, Shanghai, China.

[5] B. Mace, "Everything you need to know about rotary airlock valves", IAC, search http://www.iac-intl.com/pdf/Articles/airlock%20article%20for%20publish.pdf.

[6] T. McNeil, "Rotary valve return on investment: Doing the math", CSC Publishing, Powder and Bulk Engineering, search http://www.premach.com/MagArticles/pbe_20031201_53.pdf.

[7] Andritz Feed & Biofuel, "Rotary Valves, Functions, Features and ApplicationTechniques"search http://dev.andritzsproutbauer.com/pdf/Rotary%20Valve%20Functions%20Booklet.pdf.

[8] PDHengineer.com, "Pneumatic Conveying Systems", search http://www.pdhengineer.com/courses/m/M-5013.pdf.

[9] M. Y. Gundogdu, 2004, "Design improvements on rotary valve particle feeders used for obtaining suspended airflows", *Powder Technology*, vol. 139, pp. 76– 80.

[10] P. W. Wypych, 2008, "Effect of Rotary Valve Leakage on Pneumatic Conveying Performance", *Particulate Science and Technology*, vol. 26, pp. 257–272.

View publication stats