US 20130137319A1

(19) United States

(12) Patent Application Publication

Haller et al.

(10) Pub. No.: US 2013/0137319 A1

(43) Pub. Date: May 30, 2013

(54) **INFLATABLE STAND UP PADDLEBOARD**

(75) Inventors: **Clay Haller**, Concord, CA (US); **Charles P. Hall**, Bainbridge, WA (US)

(73) Assignee: **Advanced Elements, Inc.**, Concord, CA (US)

(21) Appl. No.: **13/305,624**

(22) Filed: **Nov. 28, 2011**

Publication Classification

(51) **Int. Cl.**
B63B 35/73 (2006.01)

(52) **U.S. Cl.**
USPC **441/66**

(57) **ABSTRACT**

An inflatable stand up paddleboard having a top surface for supporting a user and a bottom surface for residing on water. The inflatable stand up paddleboard being characterized as having a front end and back end and a longitudinal axis passing between the front and back ends. The inflatable stand up paddleboard is configured to receive at least one beam for stiffening the inflatable stand up paddleboard positioned substantially parallel to the longitudinal axis.

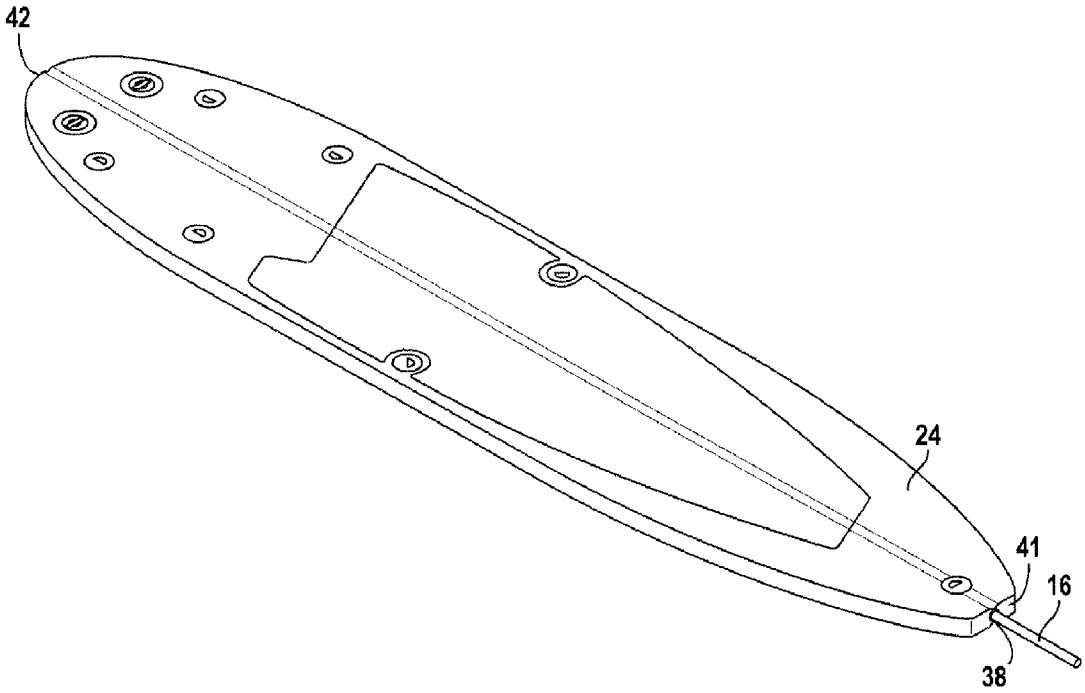

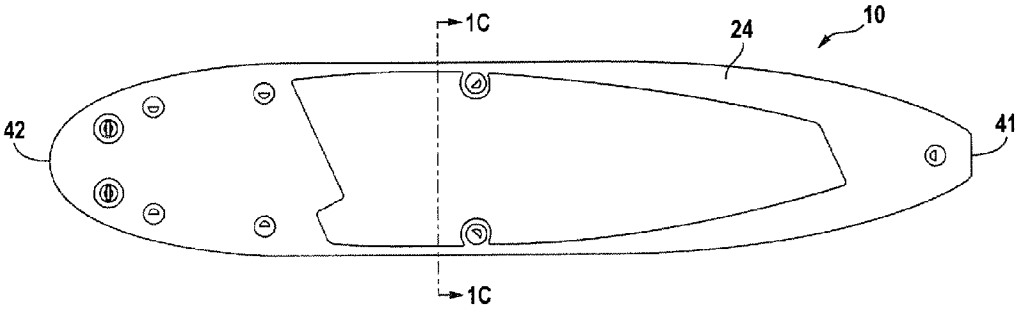

FIG. 1A

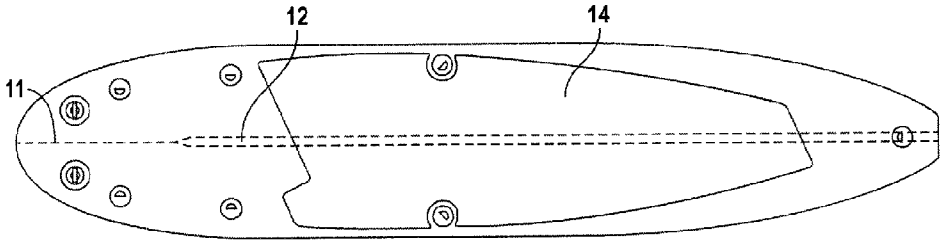

FIG. 1B

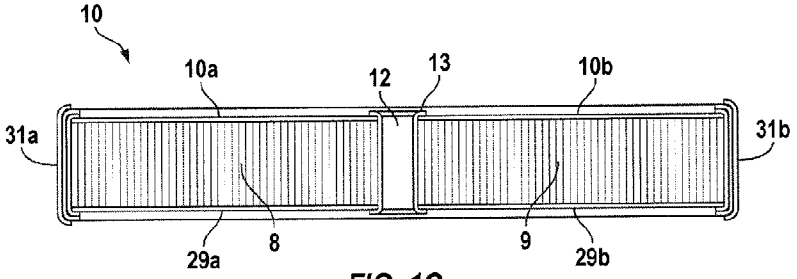

FIG. 1C

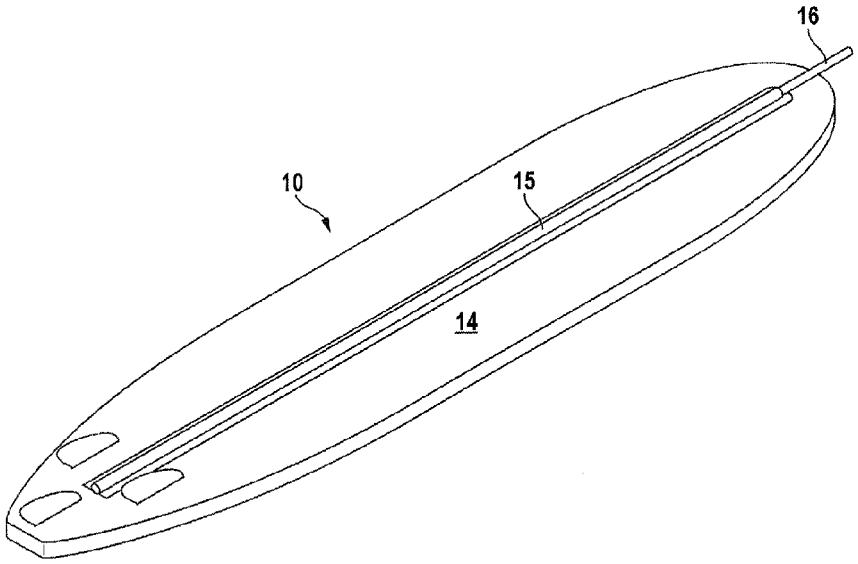

FIG. 2

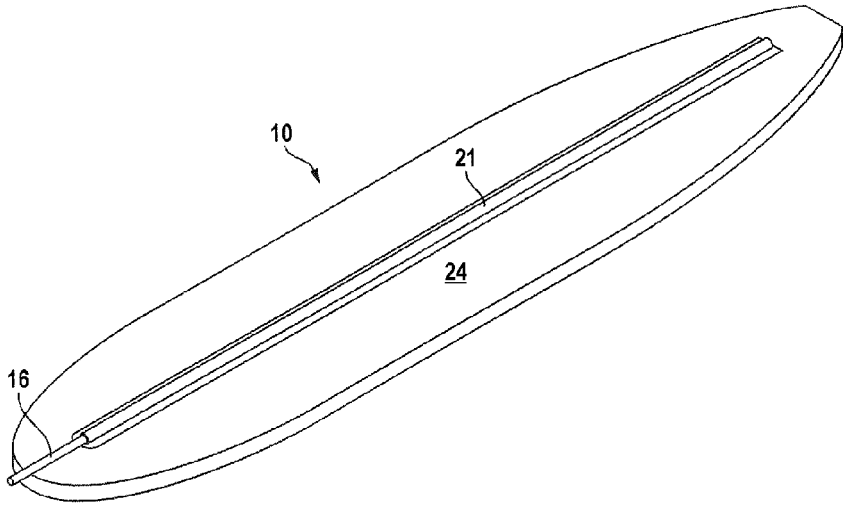

FIG. 3

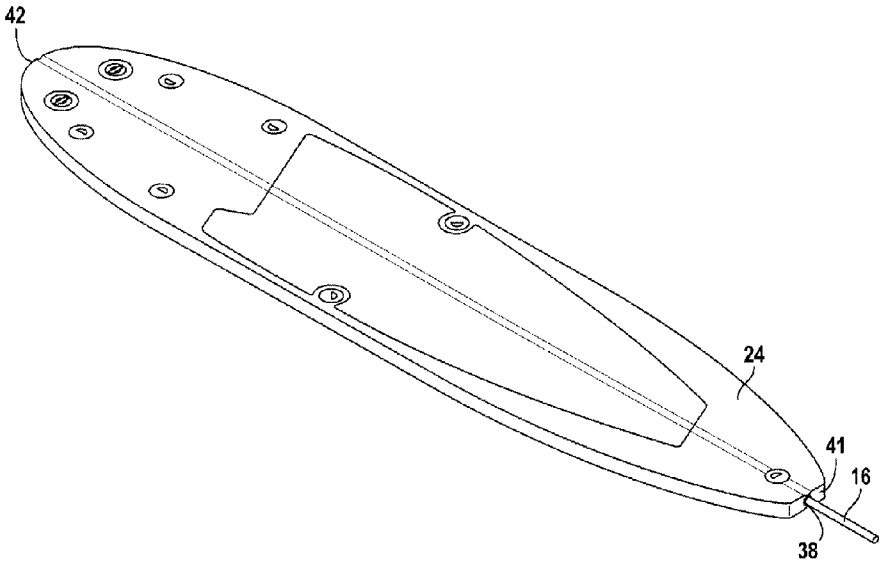

FIG. 4

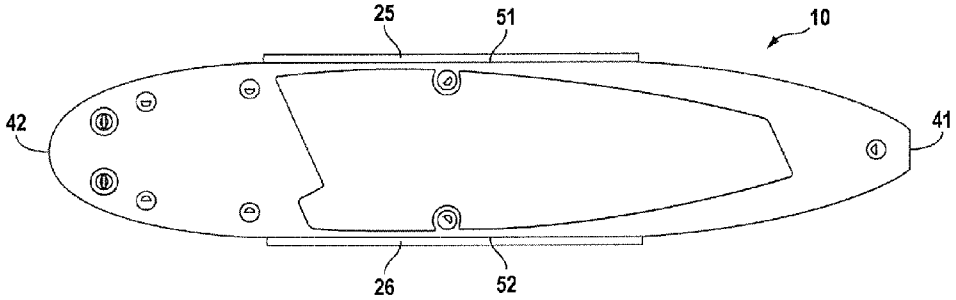

FIG. 5

INFLATABLE STAND UP PADDLEBOARD

TECHNICAL FIELD

[0001] The present invention is directed to an inflatable stand up paddleboard having a stiffening beam for improving its characteristics by reducing board flexure and thus providing a user with a superior riding experience.

BACKGROUND OF THE INVENTION

[0002] Stand up paddleboarding is an aquatic experience that is rapidly growing in popularity. Stand up paddleboarding involves employing an oversized surfboard in combination with a paddle for propulsion.

[0003] The sport of stand up paddleboarding was created to provide an aquatic activity when surf was down and the ocean surface flat. When combined with paddles, the surfboard could be used without significant wave action. Even when waves increased, those employing stand up maneuvers on paddleboards found that they could execute more interesting twists and turns by using a paddle to steer. Windsurfers became early adopters of stand up paddleboards as they were already comfortable with standing on a board and found stand up paddleboarding an excellent aquatic activity particularly when wind conditions did not provide sufficient propulsion for sailboarding.

[0004] There are several types of stand up paddleboards currently available in the marketplace. Rigid stand up paddleboards are made of foam or fiberglass, much like surfboards. Because these products are generally larger than surfboards, rigid boards can be difficult to transport. Placing them atop a moving vehicle, for example, can prove challenging as their surface area can catch wind and destabilize the vehicle. In extreme conditions or when the board is not sufficiently secured to the vehicle, it can fly from the vehicle's rooftop or cargo area and not only be damaged or destroyed in the process but also cause a significant traffic hazard.

[0005] Inflatable stand up paddleboards thus represent an excellent alternative to rigid products. Inflatable stand up paddleboards are made of drop stitched material allowing them to be inflated to very high pressures, generally from 12 to 15 psi.

[0006] The drop stitch manufacturing process begins by joining two pieces of 500 denier polyester woven support fabric having thousands of fine polyester thread lengths. This base material is made in strips from 5 to 10 feet in width and up to 400 needleheads may be used in the setup. Each needle sews a continuous, evenly spaced thread, back and forth between the two pieces of woven fabric locking them together into an impressively strong unit. Drop stitch sewing machines are complex. For example, when a change is to be made in the spacing distance between the two pieces of woven fabric, it can take over 20 days to remove and replace the required needles.

[0007] After stitching, an airtight coating is applied to the outer surface of both sides of the polyester woven support fabric and a sidewall material is then glued to it followed by a wide seam tape glued over each lap seam to create an airtight final product.

[0008] Most currently available inflatable stand up paddleboards are similarly constructed, the only difference being the shape of the board and the accessories such as D-rings and foam padding applied thereto. Even though the drop stitch material facilitates high pressures, all currently available boards are plagued by unwanted flex. The heavier the paddler, the more flex. This degrades the user experience forcing enthusiasts to turn towards rigid foam or fiberglass products despite their inherent limitations.

[0009] It is thus an object of the present invention to provide a high pressure inflatable stand up paddleboard having the convenience of an inflatable product while overcoming its limitations.

[0010] These and further objects will be more readily appreciated by considering the following disclosure and appended claims.

SUMMARY OF THE INVENTION

[0011] An inflatable stand up paddleboard having a top surface for supporting a user and a bottom surface for residing on water. The inflatable stand up paddleboard being characterized as having a front end and back end and a longitudinal axis passing between the front and back ends. The inflatable stand up paddleboard is configured to receive at least one beam for stiffening the inflatable stand up paddleboard positioned substantially parallel to the longitudinal axis.

BRIEF DESCRIPTION OF THE FIGURES

[0012] FIG. **1**A is a top view of an inflatable stand up paddleboard of the present invention.

[0013] FIG. **1**B is a bottom plan view of the inflatable stand up paddleboard of FIG. **1**A.

[0014] FIG. **1**C is a cross sectional view of the inflatable stand up paddleboard of FIG. **1**A taken along line A-A.

[0015] FIGS. **2** and **3** are bottom and top perspective views of the inflatable stand up paddleboard of the present invention illustrating a first embodiment thereof.

[0016] FIG. **4** is a top perspective view of the inflatable stand up paddleboard of the present invention illustrating a second embodiment thereof.

[0017] FIG. **5** is a top plan view of the present inflatable stand up paddleboard illustrating its third embodiment.

DETAILED DESCRIPTION OF THE INVENTION

[0018] Novel features which are characteristic of the invention, as to organization and method of operation, together with further objects and advantages thereof will be better understood from the following description considered in connection with the accompanying drawings, in which preferred embodiments of the invention are illustrated by way of example. It is to be expressly understood, however, that the drawings are for illustration description only and are not intended as definitions of the limits of the invention. The various features of novelty which characterize the invention are recited with particularity in the claims.

[0019] There has been broadly outlined more important features of the invention in the summary above and in order that the detailed description which follows may be better understood, and in order that the present contribution to the art may be appreciated. There are, of course, additional features of the invention that will be described hereinafter and which will form additional subject matter of the claims appended hereto. Those skilled in the art will appreciate that the conception upon which this disclosure is based readily may be utilized as a basis for the designing of other structures, methods and systems for carrying out the several purposes of the present invention. It is important therefore, that claims be

regarded as including such equivalent constructions insofar as they do not depart from the spirit and scope of the present invention.

[0020] Certain terminology and the derivations thereof may be used in the following description for convenience and reference only, and will not be limiting. For example, words such as "upward," "downward," "left," and "right" refer to directions in the drawings to which reference is made unless otherwise stated. Similar words such as "inward" and "outward" refer to directions toward and away from, respectively, the geometric center of a device or area and designated parts thereof. Reference in the singular tense include the plural and vice versa, unless otherwise noted.

[0021] As noted, the present invention involves an inflatable stand up paddleboard **10** generally composed of sidewalls created by joining two pieces of 500 denier polyester woven support fabric **8** and **9** (FIG. **1**C). Sidewall material **31***a* and **31***b* (FIG. **1**C) are glued to sidewall material **29***a* and **29***b* creating an extremely strong construction that can be inflated to pressures up to 15 pounds per square inch. Nevertheless, inflatable stand up paddleboards tend to be less rigid than their foam and fiberglass counterparts which detracts from the advantages that inflatable stand up paddleboards generally offer.

[0022] In going back to FIGS. **1**A, **1**B and **1**C, inflatable stand up paddleboard **10** is characterized as having top surface **24** and bottom surface **14** whose construction is shown in FIG. **1**C by taking the cross section of paddleboard **10** along line A-A.

[0023] There are several embodiments of the present invention all directed toward the placement of at least one beam for stiffening paddleboard **10**, beam **16** positioned parallel to longitudinal axis **11** (FIG. **1**B), the details of which will be more readily appreciated in the discussion which follows.

[0024] A first such embodiment is shown in FIGS. **2** and **3**. Inflatable stand up paddleboard **10** is shown in FIG. **2** with its bottom surface **14** facing upwardly. Sleeve **15** is glued or otherwise appended to surface **14**, said sleeve being composed of flexible or semi-rigid material sized to receive beam **16** along longitudinal axis **11**. It is noted that beam **16** need not traverse the entire length of inflatable stand up paddleboard **10** but is of sufficient length to significantly enhance the rigidity of inflatable stand up paddleboard **10** along longitudinal axis **11**.

[0025] As noted in reference to FIG. **3**, sleeve **15** could alternatively be situated as sleeve **21** on top surface **24** of inflatable stand up paddleboard **10** with similar rigidifying results. However, when sleeve **15** is employed in its FIG. **2** embodiment, sleeve **15** can also act as a stabilizing fin to enhance tracking performance.

[0026] As an alternative for locating beam **16** on the top or bottom surface of inflatable stand up paddleboard **10**, channel **12** can be configured within it by splitting inflatable stand up paddleboard **10** into two parts **10***a* and **10***b* and reconnecting these parts through the use of joining strip **13** which is glued on the top and bottom of inflatable stand up paddleboard sections **10***a* and **10***b* as shown in FIG. **1**C. A gap is thus created into which beam **16** can be inserted. This is further shown in FIG. **4** noting opening **38** within front end **41**.

[0027] As yet another embodiment of the present invention, reference is made to FIG. **5** showing paddleboard **10**. In this embodiment, sleeves **25** and **26** are secured to the outer edges **51** and **52**, respectively, to enable beams to be inserted therein. As a consequence, a pair of stiffening beams, each being substantially adjacent edges **51** and **52** which extend fore and aft to encompass the anticipated position of a user and are positioned substantially parallel to longitudinal axis **11**. As a preferred embodiment, it is noted that sleeves **25** and **26** can be slightly larger in diameter than the cross section of the beams to be inserted therein with a snug fit created when inflatable stand up paddleboard **10** is inflated around sleeves **25** and **26**. These sleeves can ideally be closed at their front ends and open at their back ends for selectively receiving beams.

[0028] It is noted that beam **16** can be made of any suitable material such as aluminum or fiberglass and can be constructed in two parts to enable beam **16** to be broken down to enable it to be more easily stored or transported by backpack etc.

[0029] The above disclosure is sufficient to enable one of ordinary skill in the art to practice the invention, and provides the best mode of practicing the invention presently contemplated by the inventor. While there is provided herein a full and complete disclosure of the preferred embodiments of the invention, it is not desired to limit the invention to the exact construction, dimensions, relationships, or operations as described. Various modifications, alternative constructions, changes and equivalents will readily occur to those skilled in the art and may be employed as suitable without departing from the true spirit and scope of the invention. Such changes might involve alternative materials, components, structural arrangements, sizes, shapes, forms, functions, operational features or the like. Therefore, the above description and illustration should not be considered as limiting the scope of the invention, which is defined by the appended claims.

1. In an inflatable stand up paddleboard having a top surface for supporting a user and a bottom surface for residing on water, a front end and a back end and a longitudinal axis passing between said front and back ends, the improvement comprising a channel configured between said top and bottom surfaces and a beam sized to slidably reside within said channel.

2. The inflatable stand up paddleboard of claim **1** wherein said paddleboard comprises a left side and a right side, said left side and right side joined to create said channel.

3. The inflatable stand up paddleboard of claim **2** wherein said left side and right side are joined by gluing a joining strip along said top and bottom surfaces creating said channel.

4. In an inflatable stand up paddleboard having a top surface for supporting a user and a bottom surface for residing on water, a front end and a back end and a longitudinal axis passing between said front and back ends, the improvement comprising a sleeve positioned along said longitudinal axis and a beam sized to releasably reside within said sleeve.

5. The inflatable stand up paddleboard of claim **4** wherein said sleeve is affixed to said bottom surface.

6. The inflatable stand up paddleboard of claim **4** wherein said sleeve is affixed to said top surface.

7. In an inflatable stand up paddleboard having a top surface for supporting a user and a bottom surface for residing on water, a front end and a back end and a longitudinal axis passing between said front and back ends, a left side and a right side defining edges of said inflatable stand up paddleboard extending between said front and back ends, the improvement comprising a sleeve configured on said paddleboard on its left side and a sleeve configured on said paddleboard proximate on its right side, each sleeve being substan-

tially parallel to said longitudinal axis and a pair of beams each sized to releasably reside within said sleeves.

8. An inflatable stand up paddleboard having a top surface for supporting a user and a bottom surface for residing on water, a front end and a back end and a longitudinal axis passing between said front and back ends, and at least one beam for stiffening said inflatable stand up paddleboard positioned parallel to said longitudinal axis.

9. The inflatable stand up paddleboard of claim **8** wherein said beam passes within said inflatable stand up paddleboard between said top and bottom surfaces oriented substantially parallel to said longitudinal axis.

10. The inflatable stand up paddleboard of claim **8** wherein said beam is appended to said top surface.

11. The inflatable stand up paddleboard of claim **8** wherein said beam is appended to said bottom surface.

12. The inflatable stand up paddleboard of claim **8** having a left side and a right side defining edges of said inflatable stand up paddleboard between said front and back ends, wherein a beam is positioned proximate each of said edges and oriented substantially parallel to said longitudinal axis.

* * * * *