US 20030076082A1

(19) United States

(12) Patent Application Publication

(10) Pub. No.: US 2003/0076082 A1

(43) Pub. Date: Apr. 24, 2003

Morgan et al.

(54) IMPLANTABLE SENSOR ELECTRODES AND ELECTRONIC CIRCUITRY

(76) Inventors: **Wayne A. Morgan**, Northridge, CA (US); **David Choy**, San Gabriel, CA (US); **John C. Gord**, Venice, CA (US); **Rajiv Shah**, Rancho Palos Verdes, CA (US)

Correspondence Address:
Irvin C. Harrington, III
FOLEY & LARDNER
2029 Century Park East, 35th Floor
Los Angeles, CA 90067-3021 (US)

(21) Appl. No.: **10/034,338**

(22) Filed: **Dec. 28, 2001**

Related U.S. Application Data

(60) Provisional application No. 60/335,652, filed on Oct. 23, 2001.

Publication Classification

(51) Int. Cl.[7] G01N 27/00

(52) U.S. Cl. 324/71.1

(57) **ABSTRACT**

An electronic circuit for sensing an output of a sensor having at least one electrode pair and circuitry for obtaining and processing the sensor output. The electrode pair may be laid out such that one electrode is wrapped around the other electrode in a U-shaped fashion. The electronic circuitry may include, among other things, a line interface for interfacing with input/output lines, a rectifier in parallel with the line interface, a counter connected to the line interface and a data converter connected to the counter and the electrode pair. The data converter may be a current-to-frequency converter. In addition, the rectifier may derive power for the electronic circuit from communication pulses received on the input/output lines.

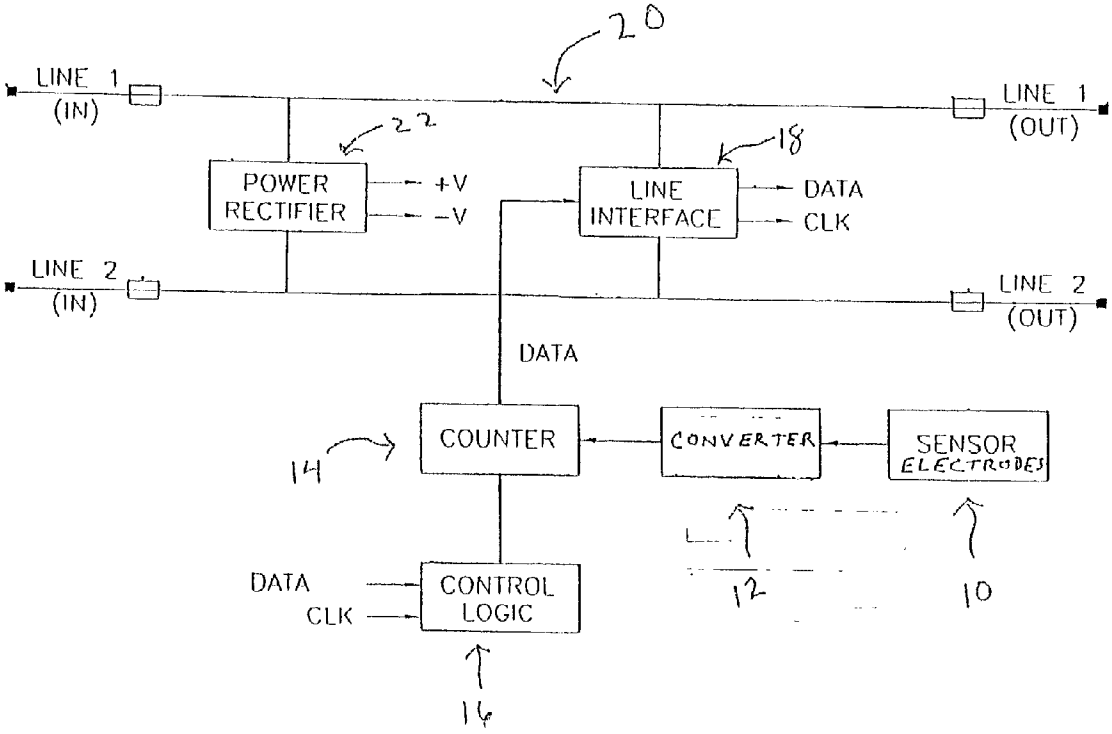

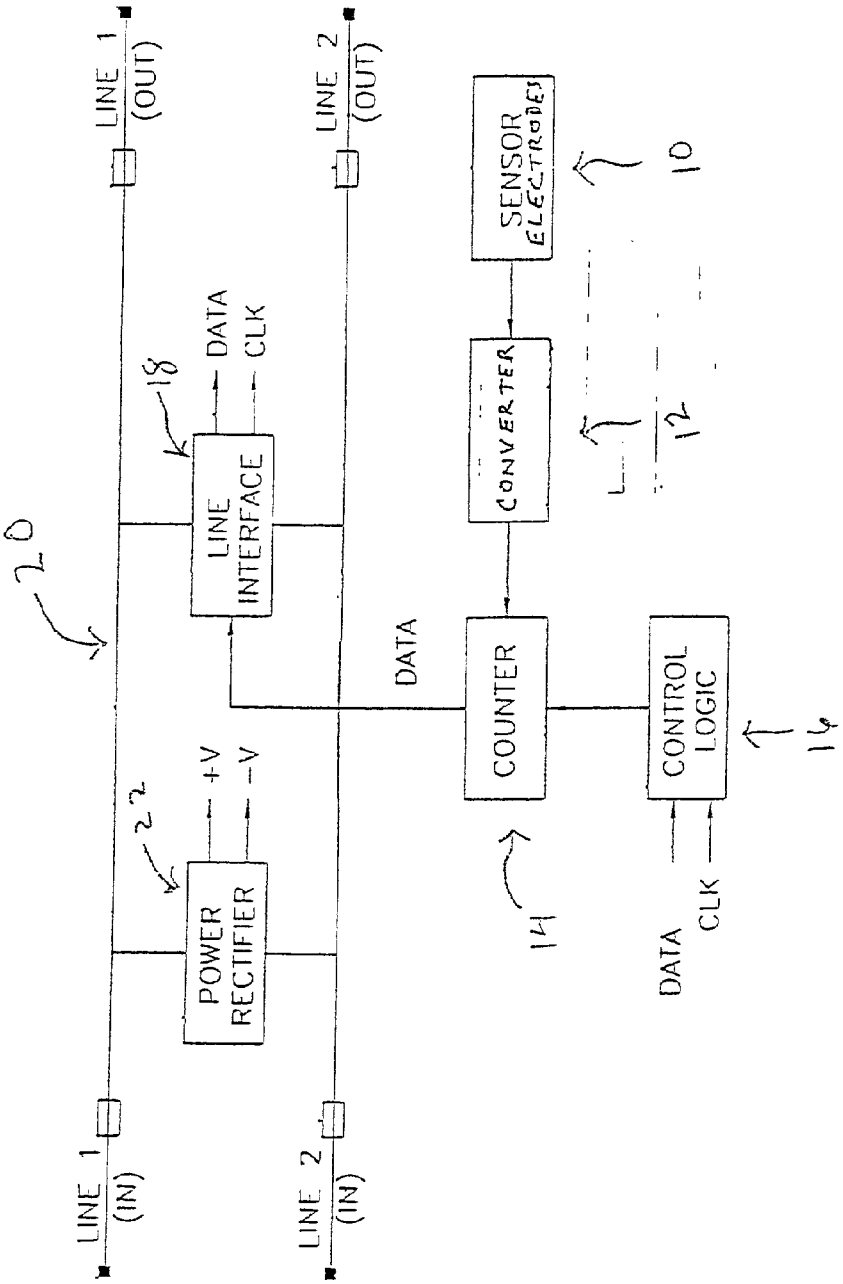
LINE 1 (IN)
LINE 2 (IN)
POWER RECTIFIER
22
+V
-V
20
LINE INTERFACE
18
DATA
CLK
LINE 1 (OUT)
LINE 2 (OUT)
DATA
COUNTER
14
CONVERTER
SENSOR ELECTRODES
10
12
CONTROL LOGIC
16
DATA
CLK

Fig. 1

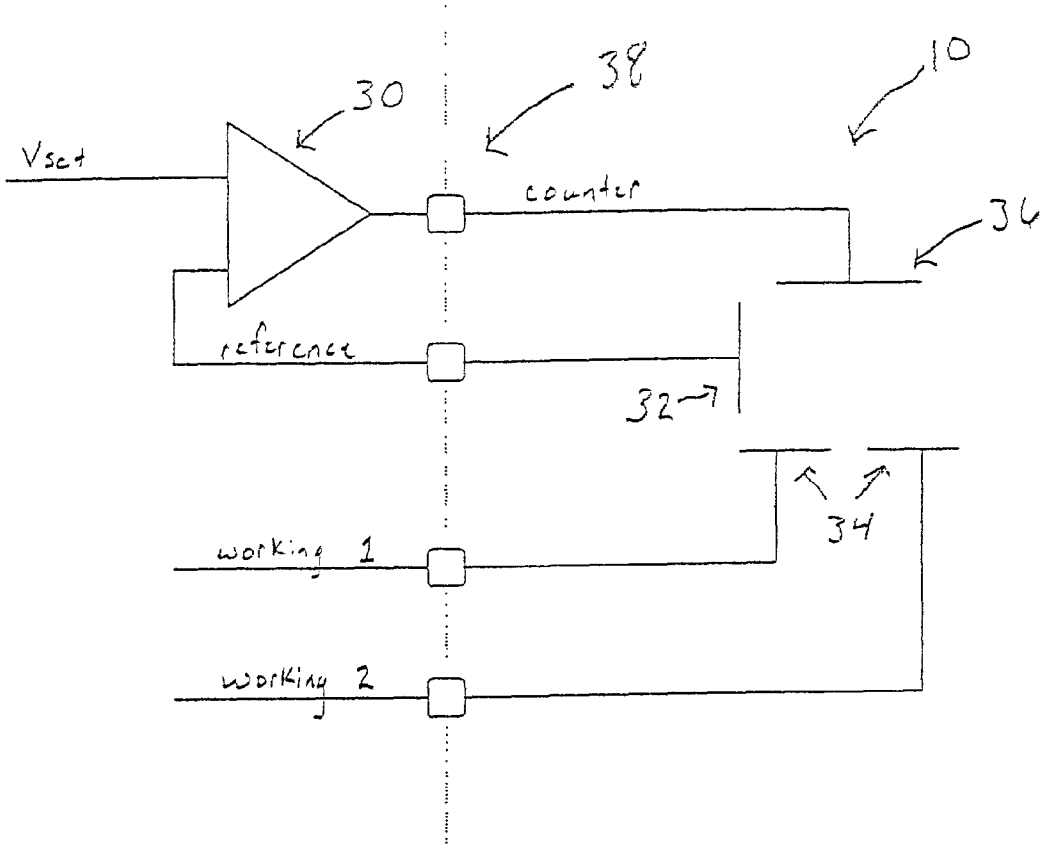

Fig. 2

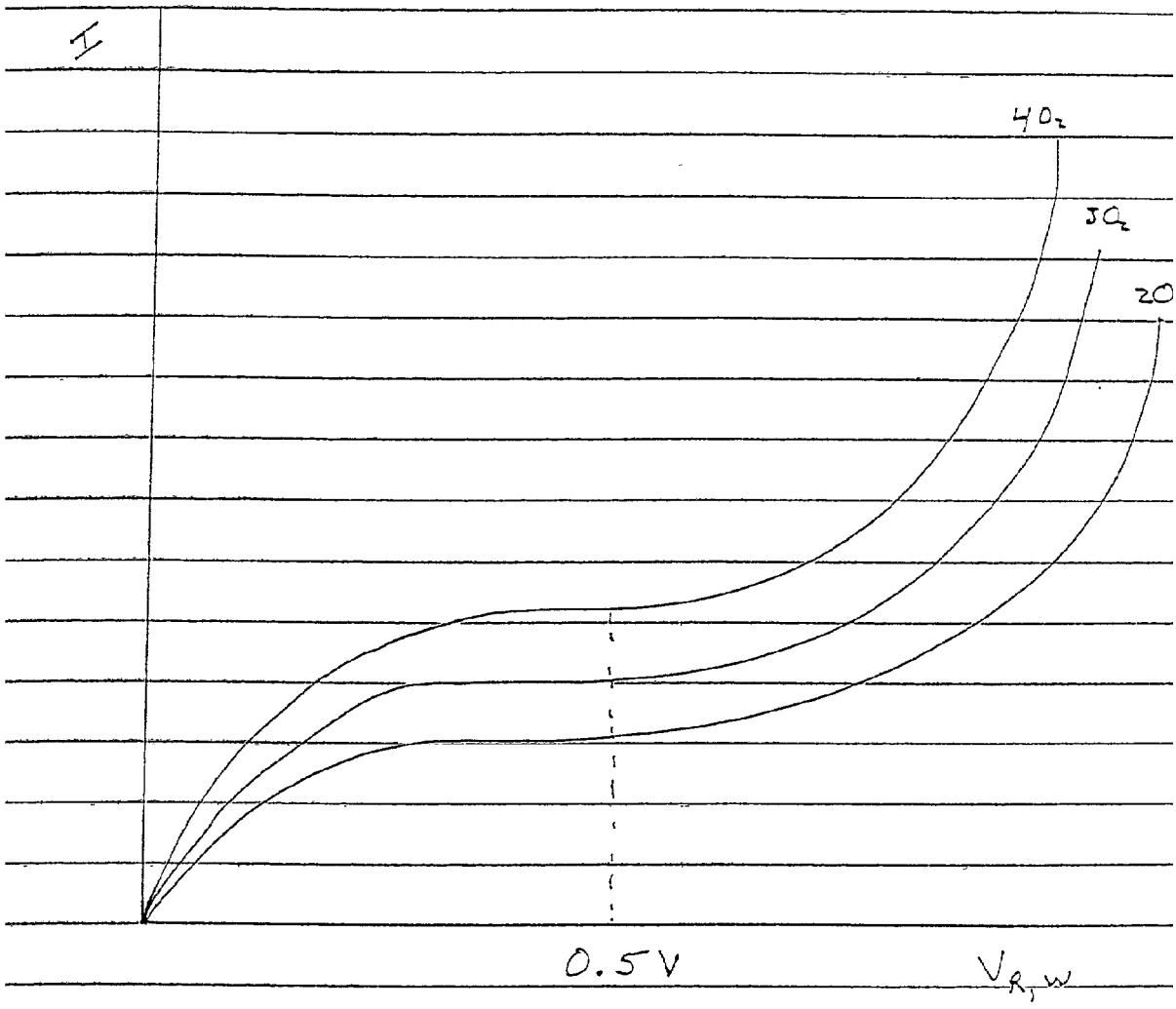

FIG. 3

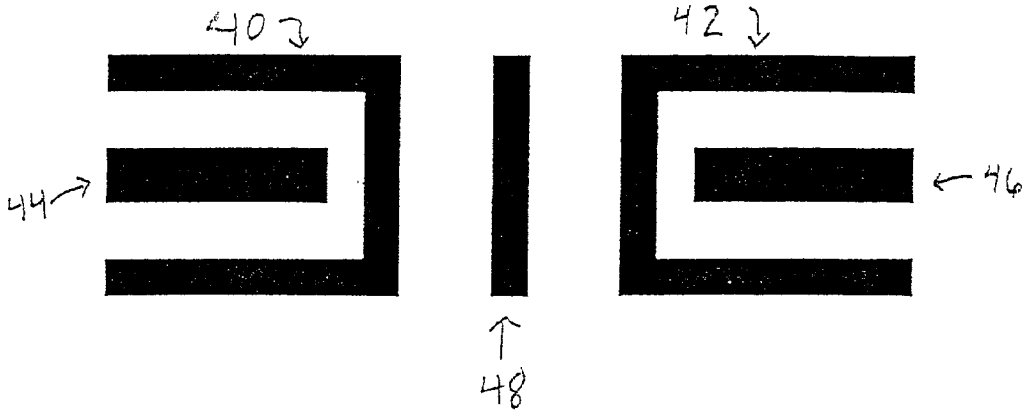

Fig. 4

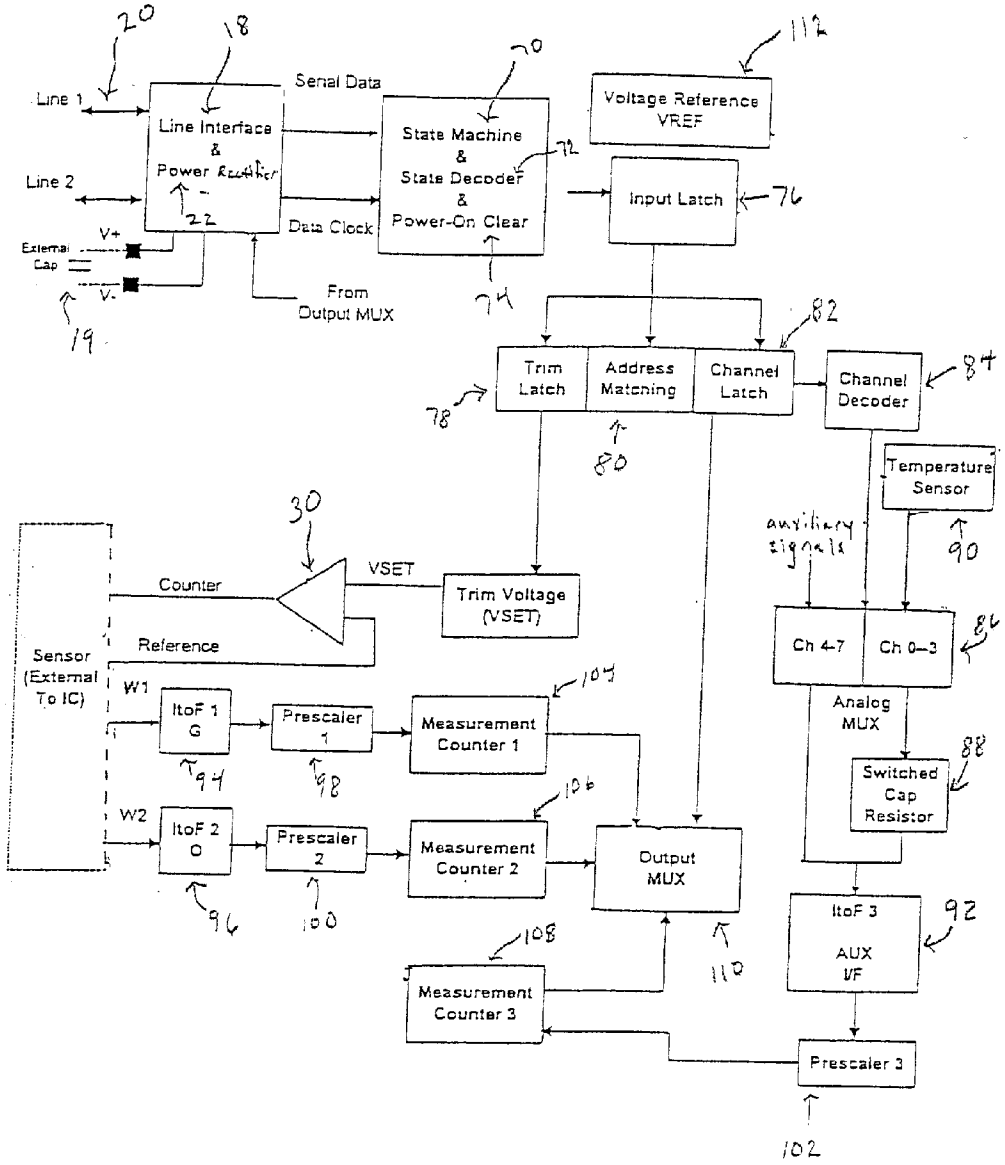
20
18
Line 1
Line 2
Line Interface & Power Rectifier
22
Serial Data
Data Clock
V+
External Cap
V-
19
From Output MUX
70
State Machine & State Decoder & Power-On Clear
72
74
Voltage Reference VREF
112
Input Latch
76
82
Trim Latch
Address Matching
Channel Latch
78
80
Channel Decoder
84
Temperature Sensor
90
auxiliary signals
30
VSET
Counter
Reference
Trim Voltage (VSET)
Sensor (External To IC)
W1
W2
ItoF 1 G
ItoF 2 O
94
96
Prescaler 1
Prescaler 2
98
100
Measurement Counter 1
Measurement Counter 2
Measurement Counter 3
104
106
108
Output MUX
110
Ch 4-7
Ch 0-3
86
Analog MUX
Switched Cap Resistor
88
ItoF 3 AUX I/F
92
Prescaler 3
102

Fig. 5

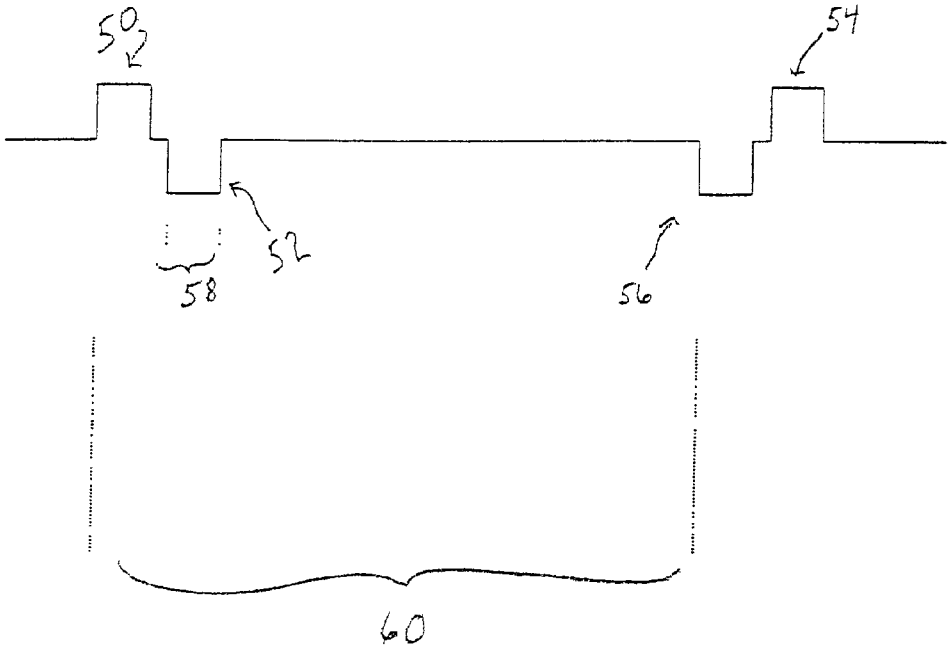

FIG. 6

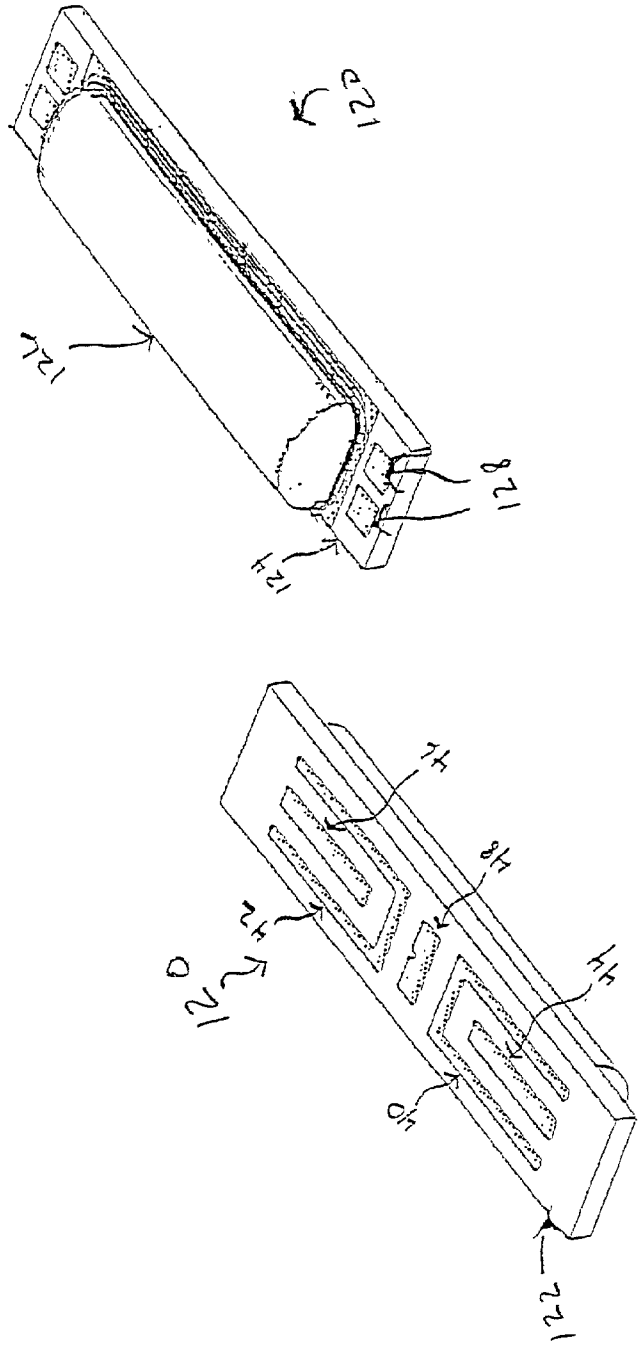

Fig. 7

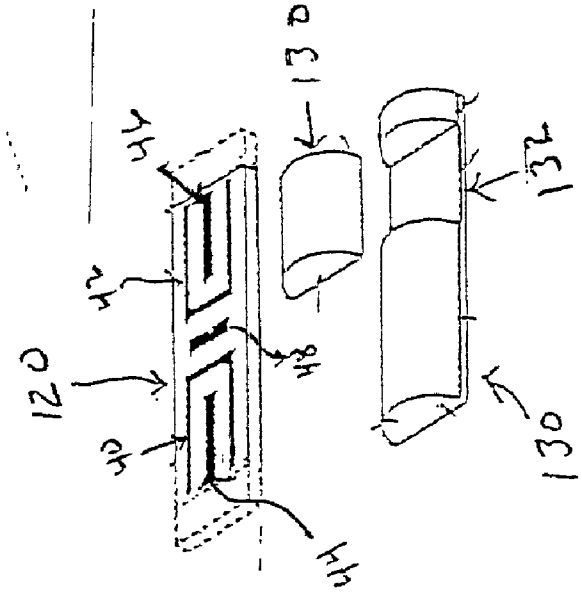

Fig. 8

IMPLANTABLE SENSOR ELECTRODES AND ELECTRONIC CIRCUITRY

CROSS-REFERENCE TO RELATED APPLICATIONS

[0001] Embodiments of the present invention claim priority from a U.S. Provisional Application entitled "Implantable Sensor Electrodes and Electronic Circuitry," Serial No. 60/335,652, filed Oct. 23, 2001, the contents of which are incorporated by reference herein.

BACKGROUND

[0002] 1. Field of the Invention

[0003] The present invention relates to the field of sensor electronics and, in particular, to implantable sensor electrodes and implantable electronic circuits for sensors.

[0004] 2. Description of Related Art

[0005] The development of sensors that can survive for extended periods in less than ideal environments has increased the burden on associated electronics used to obtain and process signals received from such sensors. For example, in the medical device field, physiological parameter sensors are available that may be implanted in vivo and left in an in vivo environment for six months to a year and longer. Such extended lengths of time in an in vivo environment have taxed previously available electronic circuitry used in connection with the physiological parameter sensors.

[0006] In addition, the availability of physiological parameter sensors that may be placed in a vascular environment or other environment that may subject a physiological parameter sensor to constant fluid environments has increased the burden on electrodes used in conjunction with a biomolecule that may be part of the physiological parameter sensor. Because multiple electrodes may be used in physiological parameter sensing applications, fluids such as, for example, blood, may create multiple conductive paths across electrodes that compromise the integrity of measurements being made with the electrodes. Electrode configuration and associated circuitry known up to this point have been ill-equipped to handle the demands of such an environment.

[0007] Moreover, the extended periods of time in which a physiological parameter sensor may be implanted in vivo have placed extra demands on the power sources driving the sensor electrodes and sensor electronics. For example, previous sensor technology, which may have been designed for relatively short term in vivo implantation of a sensor, may have included a power source, such as, for example, a lithium battery, for in vivo implantation along with the sensor. Such short term sensors may have been designed, for example, for emergency use in surgical applications where the intent was to keep the sensor powered even in storage. Thus, a hospital could store the sensors, implant them during emergency surgery, and expect to get sensor readouts immediately. However, with the advent of sensors for long term in vivo implantation, storing a sensor with an activated power source may deplete the power source to such an extent that using the sensor for long term in vivo implantation may be impractical and even unadvisable.

[0008] In addition, the demand for enhanced in vivo signal processing has put even greater demands on an already overburdened in vivo power source. Implantable, in vivo automated systems require not only extended term power requirements for powering an implanted power sensor, but also require increased power availability for the circuitry used to obtain and process sensor signals.

SUMMARY OF THE DISCLOSURE

[0009] Embodiments of the present invention relate to sensor electrodes and sensor electronics interfaced to the sensor electrodes.

[0010] Embodiments of the present invention include an electronic circuit for sensing an output of a sensor including at least one electrode pair for sensing a parameter. The at least one electrode pair may have a first electrode and a second electrode, wherein the first electrode wraps around the second electrode. The electronic circuit may contain circuitry for processing the parameter. The parameter sensed by the electrode pair may be a physiological parameter such as, for example, glucose or oxygen.

[0011] The first electrode may wrap around the second electrode in a U-shaped fashion or may surround three sides of the second electrode. The layout of the first electrode and a second electrode may be such that it minimizes cross coupling between the first electrode and the second electrode.

[0012] The electronic circuit may include a reference electrode for setting a reference voltage for the at least one electrode pair. The reference voltage may be set to about 0.5 volts.

[0013] In addition, the circuitry may include a line interface for interfacing with input/output lines; a rectifier in parallel with the line interface; a counter connected to the line interface; and a data converter connected to the counter and the at least one electrode pair. Control logic may be connected to the counter and the line interface. The control logic may include a state machine and a state decoder connected to the state machine. The control logic may include a microprocessor.

[0014] In the electronic circuit, the rectifier may transfer power from communication pulses to a capacitor. The capacitor may power the electronic circuit using power stored from the communication pulses.

[0015] The data converter may be an analog-to-digital converter, a voltage-to-frequency converter, or a current-to-frequency converter. If the data converter is a current-to-frequency converter, an output of the current-to-frequency converter may be scaled using a prescaler before connecting to the counter. The prescaler may be a divide-by-16 prescaler.

[0016] The circuitry may also include a temperature sensor for reading a temperature of an environment and a voltage reference for applying a voltage to a reference electrode. In addition, switched capacitor circuits may be used as resistors in the electronic circuit.

[0017] These and other objects, features, and advantages of embodiments of the invention will be apparent to those skilled in the art from the following detailed description of embodiments of the invention when read with the drawings and appended claims.

BRIEF DESCRIPTION OF THE DRAWINGS

[0018] **FIG. 1** shows a general block diagram of an electronic circuit for sensing an output of a sensor according to an embodiment of the present invention.

[0019] **FIG. 2** shows an electronic configuration of the sensor electrodes according to an embodiment of the present invention.

[0020] **FIG. 3** shows a graph of current versus voltage for varying levels of oxygen according to an embodiment of the present invention.

[0021] **FIG. 4** shows a physical electrode layout to minimize the effect of cross coupling between counter electrodes and working electrodes according to an embodiment of the present invention.

[0022] **FIG. 5** shows a detailed block diagram of an electronic circuit according to an embodiment of the present invention.

[0023] **FIG. 6** shows a transmitted pulse waveform according to an embodiment of the present invention.

[0024] **FIG. 7** shows a substrate having a first side which contains an electrode configuration and a second side which contains electronic circuitry according to an embodiment of the present invention.

[0025] **FIG. 8** shows an electrode side of a sensor substrate used with the spacers according to an embodiment of the present invention.

DETAILED DESCRIPTION

[0026] In the following description of preferred embodiments, reference is made to the accompanying drawings which form a part hereof, and in which are shown by way of illustration specific embodiments in which the invention may be practiced. It is to be understood that other embodiments may be utilized and structural changes may be made without departing from the scope of the preferred embodiments of the present invention.

[0027] **FIG. 1** shows a general block diagram of an electronic circuit for sensing an output of a sensor according to an embodiment of the present invention. At least one pair of sensor electrodes **10** may interface to a data converter **12**, the output of which may interface to a counter **14**. The counter **14** may be controlled by control logic **16**. The output of the counter **14** may connect to a line interface **18**. The line interface **18** may be connected to input and output lines **20** and may also connect to the control logic **16**. The input and output lines **20** may also be connected to a power rectifier **22**.

[0028] The sensor electrodes **10** may be used in a variety of sensing applications and may be configured in a variety of ways. For example, the sensor electrodes **10** may be used in physiological parameter sensing applications in which some type of biomolecule is used as a catalytic agent. For example, the sensor electrodes **10** may be used in a glucose and oxygen sensor having a glucose oxidase enzyme catalyzing a reaction with the sensor electrodes **10**. The sensor electrodes **10**, along with a biomolecule or some other catalytic agent, may be placed in a human body in a vascular or non-vascular environment. For example, the sensor electrodes **10** and biomolecule may be placed in a vein and be subjected to a blood stream, or may be placed in a subcutaneous or peritoneal region of the human body.

[0029] **FIG. 2** shows an electronic configuration of the sensor electrodes **10** according to an embodiment of the present invention. An op amp **30** or other servo controlled device may connect to sensor electrodes **10** through a circuit/electrode interface **38**. The op amp **30** may attempt to maintain a positive voltage between a reference electrode **32** and a working electrode **34** by adjusting the voltage at a counter electrode **36**. According to an embodiment of the present invention, the voltage applied at an input of the op amp **30** and thus set at the reference electrode **32** may be approximately 0.5 volts. Current may then flow from a counter electrode **36** to a working electrode **34**. Such current may be measured to ascertain the electrochemical reaction between the sensor electrodes **10** and the biomolecule of a sensor that has been placed in the vicinity of the sensor electrodes **10** and used as a catalyzing agent.

[0030] In an embodiment of the present invention where a glucose oxidase enzyme is used as a catalytic agent in a sensor, current may flow from a counter electrode **36** to a working electrode **34** only if there is oxygen in the vicinity of the enzyme and the sensor electrodes **10**. If the voltage set at the reference electrode **32** is maintained at about 0.5 volts, the amount of current flowing from a counter electrode **36** to a working electrode **34** has a fairly linear relationship with unity slope to the amount of oxygen present in the area surrounding the enzyme and the electrodes. Thus, increased accuracy in determining an amount of oxygen in the blood may be achieved by maintaining the reference electrode **32** at about 0.5 volts and utilizing this region of the current-voltage curve for varying levels of blood oxygen. A graph of current versus voltage for varying levels of oxygen may be seen in **FIG. 3**. Different embodiments of the present invention may utilize different sensors having biomolecules other than a glucose oxidase enzyme and may, therefore, have voltages other than 0.5 volts set at the reference electrode.

[0031] According to an embodiment of the present invention, more than one working electrode **34** may be used. However, although current may normally flow out of the op amp **30** toward the counter electrode **36** and then toward a corresponding working electrode **34**, in some applications where more than one working electrode **34** is used, current from a counter electrode **36** may be coupled to an unintended working electrode **34**. This phenomenon may occur because some environments in which the sensor may be used may provide multiple conductive paths from a counter electrode **36** to any of a plurality of working electrodes **34**. For example, when a sensor having a glucose oxidase enzyme is used in glucose and oxygen sensing applications and is placed in a vascular environment, blood surrounding the sensor may create a conductive path from a counter electrode **36** to any of a plurality of working electrodes **34**. Current passing through any electrode may generate oxygen at that electrode via electrochemical reaction. Thus, current passing from a counter electrode **36** to an unintended working electrode **34** may generate oxygen at that working electrode **34** and, consequently, give the impression that the oxygen at that working electrode **34** is the result of a reaction between oxygen in the blood and the glucose oxidase enzyme, ultimately resulting in false glucose readings. Such false readings could prove detrimental to a patient relying on

such readings for an accurate, automatic injection of insulin into the bloodstream. Accordingly, the sensor electrodes **10** may be configured to minimize the effect of cross coupling between counter electrodes **36** and working electrodes **34**.

[**0032**] **FIG. 4** shows a physical electrode layout to minimize the effect of cross coupling between counter electrodes and working electrodes according to an embodiment of the present invention. In **FIG. 4**, there are two counter electrodes **40**, **42** and two working electrode **44**, **46**. Each counter electrode **40**, **42** wraps around a working electrode **44**, **46** in a U-shaped fashion. A reference electrode **48** may be positioned between the counter electrodes **40**, **42**. According to this embodiment of the present invention, cross coupling between a first counter electrode **40** and a second working electrode **46** and a second counter electrode **42** and a first working electrode **44** may be minimized. The first and second counter electrodes **40**, **42** may be electronically coupled such that the voltage or electric potential of the counter electrodes **40**, **42** is equivalent.

[**0033**] In addition, all the sensor electrodes may be electroplated. Electroplating may be accomplished with any of a variety of electroplating materials that are common in the industry, such as, for example, platinum, silver, silver chloride and the like. The electronic circuit may contain plating circuitry that may be used for this purpose. For example, the electronic circuit may contain a plating circuit that is utilized only during the manufacturing process to facilitate electroplating of the electrodes.

[**0034**] Returning to **FIG. 1**, the sensor electrodes **10** may interface to a data converter **12**. The data converter **12** may be any type of analog-to-digital converter suitable for converting an electronic parameter coming from the sensor electrodes **10** into a form suitable for use by the remainder of the electronic circuit. For example, the data converter may convert current to digital data or voltage to digital data. According to an embodiment of the present invention, the data converter may convert current to frequency. A current-to-frequency converter suitable for use in an embodiment of the present invention is disclosed in U.S. Pat. No. 5,917,346, Low Power Current-to-Frequency Converter Circuit For Use In Implantable Sensors, by John C. Gord, assigned to the Alfred E. Mann Foundation, which is incorporated herein by reference.

[**0035**] The counter **14** may be any counter commonly used in the industry such as, for example, a ripple counter. The control logic **16** may be any control logic that facilitates accurate operation of the counter **14**. The counter and control logic may operate in a synchronous or asynchronous mode. The counter **14** and control logic **16** may be implemented in a variety of ways, such as, for example, with discrete devices or with a microprocessor.

[**0036**] The line interface **18** may receive information in a variety of forms such as, for example, in pulses, from a remotely located implant unit or other device to which the electronic circuit is interfaced. The line interface **18** may generate data and clock signals for use by other parts of the electronic circuitry from such information. The line interface **18** may also send information in the form of pulses, for example, back to the implant unit or other device to which it is interfaced.

[**0037**] The power rectifier **22** may take power from communication signals incident on the input lines **20** and store such power on a storage device such as, for example, a capacitor. According to embodiments of the present invention, there is no internal energy generating device such as, for example, a battery, resident in the electronic circuit. Power is derived from the communication signals using the power rectifier **22**. Thus, the electronic circuit may be used for long term sensing applications since there is no concern for depletion of an energy generating device such as, for example, a battery, within the electronic circuit. A power rectifier circuit suitable for use in an embodiment of the present invention is disclosed in U.S. Pat. No. 5,999,849, Low Power Rectifier Circuit For Implantable Medical Device, by John C. Gord et al, assigned to the Alfred E. Mann Foundation, which is incorporated herein by reference.

[**0038**] **FIG. 5** shows a more detailed block diagram of an electronic circuit according an embodiment of the present invention. Input/output lines **20** connect to a line interface **18** and power rectifier **22** and provide a communications link between the electronic circuit and a remotely located implant unit or other device.

[**0039**] According to an embodiment of the present invention, a remotely located implant unit or other device may communicate with the electronic circuit using a series of bipolar pulses transmitted across the input/output lines. A transmitted pulse waveform may be seen in **FIG. 6**. Each bipolar pulse **50**, **52**, **54**, **56** may represent one bit of data from the remotely located implant unit or other device communicating with the electronic circuit. Each bipolar pulse **50**, **52**, **54**, **56** may comprise a positive and a negative level. According to an embodiment of the present invention, a binary one may be designated by a positive level followed by a negative level. A positive level not followed by a negative level may designate a binary zero. According to an embodiment of the present invention, transmit pulse amplitudes may be between 2.3 volts and 3.6 volts. In **FIG. 6, a** first pulse **50** transmitted is a positive pulse and is followed by a negative pulse. Thus, the pair of pulses **50**, **52** indicate a binary one according to an embodiment of the present invention. The second pair of pulses **54**, **56** in **FIG. 6** is a negative pulse followed by a positive pulse. Thus, according to an embodiment of the present invention, the second pair of pulses **54**, **56** represent a binary zero. A zero voltage level may exist between positive and negative pulses. According to an embodiment of the present invention, a pulse width **58** may be approximately 1.9 micro seconds. The pulses may have a pulse repetition rate of 4,096 hertz, corresponding to a period **60** of approximately 244 microseconds. The pulse repetition rate may be adjustable according to the equation 4,096 Hertz/n, where n=1, 2, 3, 4, 5, 6, 7 or 8.

[**0040**] According to an embodiment of the present invention, the electronic circuit may be implemented with a variety of communication delays built in so that the integrity of data transmissions may be increased. For example, according to an embodiment of the present invention, a 152 microsecond delay after receipt of a pair of transmitted pulses may be used for ignoring other pulses on the input/output lines. By implementing such a delay, confusion as to the intended recipient of the pulses may be decreased if, for example, there are a plurality of electronic circuits using the same input/output lines or of the electronic circuit has put its own pulses onto the input/output lines.

[0041] Following receipt of data bits by the electronic circuit from the remotely located implant unit or other device, the electronic circuit may respond in a variety of ways depending on the opcode or data received. For example, the electronic circuit may respond by outputting a counter value, a trim setting value, a mode status, a channel setting, an identification number that has been permanently etched onto the circuit, or the like. According to an embodiment of the present invention, the electronic circuit may respond in the form of unipolar pulses. For example, if the response value is a binary one, the electronic circuit may set a logic high using a positive pulse for a duration from between one to ten microseconds, nominally 44 microseconds after the first edge of the bipolar pulse received from the remotely located implant unit or other device. The amplitude of the pulses sent by the electronic device to the remotely located implant unit or other device may be between one volt and 3.6 volts. If the response from the electronic circuit is a binary zero, no pulse may be sent by the electronic circuit to the remotely located implant unit or other device.

[0042] Returning to **FIG. 5**, the input lines **20** may be fed to a power rectifier **22** which uses pulses incident on the input lines **20** to charge a capacitor **19**. Electrical charge stored in the capacitor **19** extracted from the communication pulses on the input lines **20** may be used to power the electronic circuit. The capacitor **19** may also act as a low pass filter for the electronic circuit to reduce voltage ripple. According to an embodiment of the present invention, using a pulse width of 2 microseconds every 244 microseconds, the capacitance may be about 0.033 microfarads. Because a capacitor of this size may be too large for an integrated device, if the electronic circuit is fabricated as an integrated circuit, the capacitor **19** may be a discrete capacitor external to the electronic circuit. According to an embodiment of the present invention, the capacitor may be charged to +/−3 volts.

[0043] The input lines **20** may also be connected to a line interface **18** which, according to an embodiment of the present invention, may receive information in a form such as, for example, bipolar pulses from a remotely located implant unit or other device. The line interface **18** may also generate data and clock signals and may also send unipolar pulses back to the remotely located implant unit or other device.

[0044] A state machine **70** and state decoder **72** may be connected to the line interface **18**. Data and clock signals generated by the line interface **18** may be used by the state machine **70** to extract data and to determine the nature of the bipolar pulses received on the input lines **20**. The state machine **70** may provide a variety of functions for the electronic circuit. For example, the state machine **70** may generate system clocks, clear counters, check parity and the like. The state machine **70** may also decode opcodes and data. Decoded opcodes may designate a variety of functions such as, for example, latching a new multiplexer channel setting, setting trim values and setting a test mode. The state decoder **72** may be used to decode counter outputs. In addition, the state machine **70** and state decoder **72** may include a power-on clear circuit **74**. According to an embodiment of the present invention, the power-on clear circuit **74** may be a typical RC type pulse generation circuit having a 50 picofarad capacitor, a transistor acting as a resistor, and two inverters to square a pulse.

[0045] The state machine **70** and state decoder **72** may interface to an input latch **76**. According to an embodiment of the present invention, the input latch **76** may be used to latch addresses, opcodes and data used in a command.

[0046] The input latch **76** may feed a trim latch **78**, an address matching circuit **80** and a channel latch **82**. The channel latch **82** may comprise a plurality of latches with data inputs from the input latch **76**. The channel latch **82** may be used to control prescalers and multiplexers. The trim latch **78** may also consist of a plurality of latches. Inputs to the trim latch **78** may contain trim sitting data. Once latched, the trim sitting may be maintained until the next trim setting operation or until a power-on reset occurs.

[0047] According to an embodiment of the present invention, trim settings may have secret handshakes. Because trim settings may greatly affect the operation of the electronic circuit, care may be taken to minimize errors when setting trim voltages. For example, the electronic circuit may receive specific commands with no other commands in between before trim voltages are set.

[0048] The address matching circuit **80** may be used to verify that instructions and data sent to an electronic circuit are being received by the intended electronic circuit. In applications where multiple sensors, sensor electrodes and sensor electronic circuits are used, the address matching circuit **80** can verify that each electronic circuit receives instructions and data intended for it. For example, in some applications, several electronic circuits may be daisy chained together. Because each electronic circuit may have a unique address, instructions and data sent over a serial bus may be received by each electronic circuit but intended for only one electronic circuit. The address matching circuit **80** will read the address for which the instructions and data are intended and compare that address to the address of the electronic circuit in which the address matching circuit **80** is resident. If the address read by the address matching circuit **80** matches the address of the electronic circuit, the instructions and data will be used by the electronic circuit. If the address read by the address matching circuit **80** does not match the address of the electronic circuit, the instructions and data will be ignored by the electronic circuit.

[0049] The channel latch **82** may feed a channel decoder **84**. The channel decoder **84** may decode channel bytes from the channel latch **82** into channel select signals. The channel decoder **84** signals may then be used to control an analog multiplexer **86** for the selection of auxiliary signals for measurement. The analog multiplexer **86** may multiplex auxiliary signals to a data converter for measurement. The analog multiplexer **86**, according to an embodiment of the present invention, may be an eight channel CMOS multiplexer. If voltage signals are multiplexed out of the analog multiplexer, they may be directed to a switched capacitor resistor **88** for conversion of the voltages to currents, thereby putting the voltages in a form that may be measured by current to frequency converters. Although a discrete resistor or a transistor used as a resistor may be used in place of the switched capacitor resistor **88**, the switched capacitor resistor **88** is used because it is generally smaller than other types of resistors and takes up less space in the electronic circuit.

[0050] A temperature sensor **90** may be fed into the analog multiplexer **86** providing an output current that is function of

temperature. According to an embodiment of the present invention, nominal output current from the temperature sensor **90** may be 50 nanoamps and may change by 1 nanoamp per degree Celsius. Because some physiological parameter sensing applications are temperature dependent, such as, for example, a glucose oxygen reaction, precise calibration of the electronic circuitry depends on the temperature of the environment in which the electronic circuit is located, such as, for example, the human body. Therefore, the temperature sensor **90** may be included in the electronic circuit to provide proper calibration of the electronic circuit. For example, a patient with a fever may cause a different glucose/oxygen reaction than a patient with a normal body temperature. The temperature sensor **90** may be used to compensate for this difference.

[**0051**] Several current-to-frequency **92**, **94**, **96** converters may be used in the electronic circuit shown in **FIG. 5**. Current-to-frequency converters **92**, **94**, **96** provide an easy method by which to count cycles, consume very low power, automatically average, and make current measurement relatively inexpensive. In addition, current-to-frequency converters **92**, **94**, **96** are conducive to measuring current through the working electrodes **34** while holding the working electrodes **34** at ground without using a negative power supply. Current passing from the counter electrodes **36** to the working electrodes **34** tends to drive the working electrodes **34** above ground. The current-to-frequency converters **92**, **94**, **96** emit negative charge packets. By interfacing the working electrodes **34** to the current-to-frequency converters **92**, **94**, **96**, the working electrodes **34** may be maintained at ground. This is because the negative charge packets emitted by the current-to-frequency converters **92**, **94**, **96** tend to offset the current from the counter electrodes **36** tending to drive the working electrodes **34** above ground.

[**0052**] The current-to-frequency **92**, **94**, **96** converters may be calibrated in a variety of ways. According to an embodiment of the present invention, the current-to-frequency **92**, **94**, **96** converters may calibrated at about 100 counts/sec/nanoamp. The calibration of the current-to-frequency **92**, **94**, **96** converters may depend on a variety of factors including, without limitation, the length of the counting time and any current-to-frequency conversion factors.

[**0053**] The current-to-frequency converters **92**, **94**, **96** may feed prescalers **98**, **100**, **102**. The prescalers **98**, **100**, **102** may be used to modify the output of the current-to-frequency converters **92**, **94**, **96**. For example, the prescalers **98**, **100**, **102** may simply be divide by 16 circuits that reduces the number of counts seen by the measurement counters **104**, **106**, **108**. In this way, the burden on the measurement counters **104**, **106**, **108** is minimized and risk of the measurement counters **104**, **106**, **108** overflowing is reduced. However, the electronic circuit may be designed such that use of the prescalers **98**, **100**, **102** is optional by setting a flag or other indicator.

[**0054**] The measurement counters **104**, **106**, **108** may be used to measure the output of the current-to-frequency converters **92**, **94**, **96** or to measure auxiliary signals. By knowing the count of the frequency output by the current-to-frequency converters **92**, **94**, **96**, the length of the counting time, and any current-to-frequency conversion factors used by the current-to-frequency converters **92**, **94**, **96**, the current generated by the sensor may be calculated. The measurement counters **104**, **106**, **108** may contain their own multiplexers. The measurement counters **104**, **106**, **108**, or the multiplexers on the measurement counters **104**, **106**, **108**, may feed a general output multiplexer **110** which sends count values to the line interface **18**. The line interface **18** may then send these count values back to a remotely located implant unit or other device.

[**0055**] The electronic circuit may also contain a voltage reference **112**. The voltage reference **112** may take a variety of forms. For example, the voltage reference **112** may be a band gap reference circuit and may provide bias voltages used to provide known currents to transistors.

[**0056**] The electronic circuit may also contain a variety of other elements. For example, the electronic circuit may contain a test pad used for test purposes. A clock may be fed into the test pad to exercise the counters. The test pad may also be configured as an output so that on-chip voltage references may be measured.

[**0057**] The electronic circuit may also contain variable bias circuitry. In order for the electronic circuit to operate quickly, a significant amount of bias current may be required to drive the transistors included in the circuit. However, there may be extended periods of time when the electronic circuit engages in very little activity. During periods of little activity, the variable bias circuitry may decrease the amount of bias current available to the electronic circuit. In addition, as soon as the voltage on the input lines varies by a threshold amount such as, for example, a volt or so, the variable bias circuitry may increase the amount of bias current available to the electronic circuit so that all of the functions of the electronic circuit may operate quickly. Thus, the variable bias circuitry may provide a dynamically adjustable bias current for the electronic circuit. The variable bias circuitry may anticipate pulses being received on the input lines so that, when the pulses arrive at the electronic circuit, an adequate amount of bias current is available for fast operation of the electronic circuit.

[**0058**] The electronic circuit may be implemented in a variety of ways. According to an embodiment of the present invention, the electrodes and the circuitry may be affixed to a single substrate. **FIG. 7** shows a substrate **120** having two sides, a first side **122** of which contains an electrode configuration and a second side **124** of which contains electronic circuitry. As may be seen in **FIG. 7, a** first side **122** of the substrate comprises two counter electrode-working electrode pairs **40**, **42**, **44**, **46** on opposite sides of a reference electrode **48**. A second side **124** of the substrate comprises electronic circuitry. As shown, the electronic circuitry may be enclosed in a hermetically sealed casing **126**, providing a protective housing for the electronic circuitry. This allows the sensor substrate **120** to be inserted into a vascular environment or other environment which may subject the electronic circuitry to fluids. By sealing the electronic circuitry in a hermetically sealed casing **126**, the electronic circuitry may operate without risk of short circuiting by the surrounding fluids. Also shown in **FIG. 7** are pads **128** to which the input and output lines of the electronic circuitry may be connected.

[**0059**] The electronic circuitry itself may be fabricated in a variety of ways. According to an embodiment of the present invention, the electronic circuitry may be fabricated as an integrated circuit using techniques common in the industry.

[0060] **FIG. 8** shows an electrode side of a sensor substrate **120** used with the spacers **130** according to an embodiment of the present invention. The embodiment shown in **FIG. 8** may be used for physiological parameter sensing such as, for example, glucose sensing in the human body. The spacer **130** may be placed on top of the electrodes **40**, **42**, **44**, **46**, **48**. If the spacer **130** is made of silicon, for example, the spacer **130** may pass oxygen but will not pass glucose. A glucose oxidase enzyme may be placed in the indentation **132** of the spacer **130**, thereby resting over a second counter electrode-working electrode pair **42**, **46**. Oxygen passing through the silicon spacer **130** and reacting with a first counter electrode-working electrode pair **40**, **44** may be read by the current-to-frequency converters and used to establish a reference amount of oxygen in the blood. Glucose reacting with the glucose oxidase enzyme seated over the second counter electrode-working electrode pair **42**, **46** will tend to use up oxygen, leaving less oxygen available for reaction with the second counter electrode-working electrode pair **42**, **46**. Nonetheless, the remaining amount of oxygen will still react with the second counter electrode-working electrode pair **42**, **46**, and this value may be read by the current-to-frequency converter to which it is connected. The values out of each current-to-frequency to converter may be read and the differing amounts of oxygen may be used to determine the amount of glucose in the blood. The amount of glucose in the blood may be used to automatically deliver insulin to a patient using an implantable pump or other device.

[0061] While particular embodiments of the present invention have been shown and described, it will be obvious to those skilled in the art that the invention is not limited to the particular embodiments shown and described and that changes and modifications may be made without departing from the spirit and scope of the appended claims.

What is claimed is:

1. An electronic circuit for sensing an output of a sensor, the electronic circuit comprising

at least one electrode pair for sensing a parameter, the at least one electrode pair having a first electrode and a second electrode, wherein the first electrode wraps at least partially around the second electrode; and

circuitry for processing the parameter.

2. The electronic circuit of claim 1, wherein the first electrode wraps around the second electrode in a U-shaped fashion.

3. The electronic circuit of claim 1, wherein the first electrode wraps around the second electrode by surrounding three sides of the second electrode.

4. The electronic circuit of claim 1, wherein a layout of the first electrode and a second electrode minimizes cross coupling between the first electrode and the second electrode.

5. The electronic circuit of claim 1, further comprising a reference electrode for setting a reference voltage for the at least one electrode pair.

6. The electronic circuit of claim 5, wherein the reference voltage set on the reference electrode is about 0.5 volts.

7. The electronic circuit of claim 1, wherein the circuitry comprises

a line interface for interfacing with input/output lines;

a rectifier in parallel with the line interface;

a counter connected to the line interface; and

a data converter connected to the counter and the at least one electrode pair.

8. The electronic circuit of claim 7, further comprising control logic connected to the counter and the line interface.

9. The electronic circuit of claim 8, wherein the control logic comprises

a state machine; and

a state decoder connected to the state machine.

10. The electronic circuit of claim 8, wherein the control logic comprises a microprocessor.

11. The electronic circuit of claim 7, wherein the rectifier transfers power from communication pulses to a capacitor.

12. The electronic circuit of claim 11, wherein the capacitor powers the electronic circuit using power stored from the communication pulses.

13. The electronic circuit of claim 7, wherein the data converter is an analog-to-digital converter.

14. The electronic circuit of claim 7, wherein the data converter is an voltage-to-frequency converter.

15. The electronic circuit of claim 7, wherein the data converter is a current-to-frequency converter.

16. The electronic circuit of claim 15, wherein an output of the current-to-frequency converter is scaled using a prescaler before connecting to the counter.

17. The electronic circuit of claim 16, wherein the prescaler is a divide-by-16 prescaler.

18. The electronic circuit of claim 7, wherein the circuitry further comprises

a temperature sensor for reading a temperature of an environment; and

a voltage reference for applying a voltage to a reference electrode.

19. The electronic circuit of claim 7, further comprising switched capacitor circuits for use as resistors in the electronic circuit.

20. The electronic circuit of claim 1, wherein the parameter sensed by the at least one electrode pair is a physiological parameter.

21. The electronic circuit of claim 20, wherein the physiological parameter sensed is glucose.

22. The electronic circuit of claim 20, wherein the physiological parameter sensed is oxygen.

* * * * *