Doc Code: PA..
Document Description: Power of Attorney

PTO/AIA/82A (07-13)
Approved for use through 11/30/2014. OMB 0651-0051
U.S. Patent and Trademark Office; U.S. DEPARTMENT OF COMMERCE
Under the Paperwork Reduction Act of 1995, no persons are required to respond to a collection of information unless it displays a valid OMB control number.

TRANSMITTAL FOR POWER OF ATTORNEY TO ONE OR MORE REGISTERED PRACTITIONERS

NOTE: This form is to be submitted with the Power of Attorney by Applicant form (PTO/AIA/82B) to identify the application to which the Power of Attorney is directed, in accordance with 37 CFR 1.5, unless the application number and filing date are identified in the Power of Attorney by Applicant form. If neither form PTO/AIA/82A nor form PTO/AIA82B identifies the application to which the Power of Attorney is directed, the Power of Attorney will not be recognized in the application.

Application Number	
Filing Date	
First Named Inventor	Peter Hall
Title	Inflatable Paddle Board
Art Unit	
Examiner Name	
Attorney Docket Number	3520-001-USP

SIGNATURE of Applicant or Patent Practitioner

Signature	/Mark D. Trenner/	Date (Optional)	August 7, 2016
Name	Mark D. Trenner	Registration Number	43961
Title (if Applicant is a juristic entity)	Attorney of Record		
Applicant Name (if Applicant is a juristic entity)	Twitch, LLC		

NOTE: This form must be signed in accordance with 37 CFR 1.33. See 37 CFR 1.4(d) for signature requirements and certifications. If more than one applicant, use multiple forms.

☑ *Total of 1 forms are submitted.

This collection of information is required by 37 CFR 1.131, 1.32, and 1.33. The information is required to obtain or retain a benefit by the public which is to file (and by the USPTO to process) an application. Confidentiality is governed by 35 U.S.C. 122 and 37 CFR 1.11 and 1.14. This collection is estimated to take 3 minutes to complete, including gathering, preparing, and submitting the completed application form to the USPTO. Time will vary depending upon the individual case. Any comments on the amount of time you require to complete this form and/or suggestions for reducing this burden, should be sent to the Chief Information Officer, U.S. Patent and Trademark Office, U.S. Department of Commerce, P.O. Box 1450, Alexandria, VA 22313-1450. DO NOT SEND FEES OR COMPLETED FORMS TO THIS ADDRESS. **SEND TO: Commissioner for Patents, P.O. Box 1450, Alexandria, VA 22313-1450.**

If you need assistance in completing the form, call 1-800-PTO-9199 and select option 2.

Doc Code: PA..
Document Description: Power of Attorney

PTO/AIA/82B (07-13)
Approved for use through 11/30/2014. OMB 0651-0051
U.S. Patent and Trademark Office; U.S. DEPARTMENT OF COMMERCE
Under the Paperwork Reduction Act of 1995, no persons are required to respond to a collection of information unless it displays a valid OMB control number

POWER OF ATTORNEY BY APPLICANT

I hereby revoke all previous powers of attorney given in the application identified in either the attached transmittal letter or the boxes below.

Application Number	Filing Date

(Note: The boxes above may be left blank if information is provided on form PTO/AIA/82A.)

☑ I hereby appoint the Patent Practitioner(s) associated with the following Customer Number as my/our attorney(s) or agent(s), and to transact all business in the United States Patent and Trademark Office connected therewith for the application referenced in the attached transmittal letter (form PTO/AIA/82A) or identified above: 46317

OR

☐ I hereby appoint Practitioner(s) named in the attached list (form PTO/AIA/82C) as my/our attorney(s) or agent(s), and to transact all business in the United States Patent and Trademark Office connected therewith for the patent application referenced in the attached transmittal letter (form PTO/AIA/82A) or identified above. (Note: Complete form PTO/AIA/82C.)

Please recognize or change the correspondence address for the application identified in the attached transmittal letter or the boxes above to:

☑ The address associated with the above-mentioned Customer Number

OR

☐ The address associated with Customer Number:

OR

Firm or Individual Name					
Address					
City		State		Zip	
Country					
Telephone		Email			

I am the Applicant (if the Applicant is a juristic entity, list the Applicant name in the box):

Twitch, LLC

☐ Inventor or Joint Inventor (title not required below)

☐ Legal Representative of a Deceased or Legally Incapacitated Inventor (title not required below)

☑ Assignee or Person to Whom the Inventor is Under an Obligation to Assign (provide signer's title if applicant is a juristic entity)

☐ Person Who Otherwise Shows Sufficient Proprietary Interest (e.g., a petition under 37 CFR 1.46(b)(2) was granted in the application or is concurrently being filed with this document) (provide signer's title if applicant is a juristic entity)

SIGNATURE of Applicant for Patent

The undersigned (whose title is supplied below) is authorized to act on behalf of the applicant (e.g., where the applicant is a juristic entity).

Signature	Peter Hall	Date (Optional)	
Name	Peter Hall		
Title	Principal		

NOTE: Signature - This form must be signed by the applicant in accordance with 37 CFR 1.33. See 37 CFR 1.4 for signature requirements and certifications. If more than one applicant, use multiple forms.

☑ Total of 1 forms are submitted.

This collection of information is required by 37 CFR 1.131, 1.32, and 1.33. The information is required to obtain or retain a benefit by the public which is to file (and by the USPTO to process) an application. Confidentiality is governed by 35 U.S.C. 122 and 37 CFR 1.11 and 1.14. This collection is estimated to take 3 minutes to complete, including gathering, preparing, and submitting the completed application form to the USPTO. Time will vary depending upon the individual case. Any comments on the amount of time you require to complete this form and/or suggestions for reducing this burden, should be sent to the Chief Information Officer, U.S. Patent and Trademark Office, U.S. Department of Commerce, P.O. Box 1450, Alexandria, VA 22313-1450. DO NOT SEND FEES OR COMPLETED FORMS TO THIS ADDRESS. **SEND TO: Commissioner for Patents, P.O. Box 1450, Alexandria, VA 22313-1450.**

If you need assistance in completing the form, call 1-800-PTO-9199 and select option 2.

INFLATABLE PADDLE BOARD

PRIORITY CLAIM

[0001] This application claims the priority benefit of U.S. Provisional Patent Application No. 62/202,549 filed on August 7, 2015 titled "Inflatable Paddle Board" of Peter Hall, hereby incorporated by reference for all that it discloses as though fully set forth herein.

BACKGROUND

[0002] Stand-up paddle boarding is believed to have originated in Hawaii by surfers standing on long surf boards and using paddles. Unlike surfing, however, paddle boarding can be easier to learn for a wider spectrum of people. Even some surfers enjoy paddle boarding because of its versatility. For example, paddle boarding can be practiced in still waters without surf, and is increasingly being practiced on rivers in whitewater and other bodies of water.

BRIEF DESCRIPTION OF THE DRAWINGS

[0003] **Figure 1** is a top perspective view of an example inflatable paddle board.

[0004] **Figures 2A-2F** are top and side views illustrating components and assembly of an example inflatable paddle board.

[0005] **Figures 3A-3C** are top, side, and bottom views, respectively, of the example inflatable paddle board of Figures 2A-F shown assembled.

[0006] **Figures 4-6** are illustrations of the inflatable paddle board shown in example use cases.

[0007] **Figure 7** is a top perspective view of another example inflatable paddle board.

[0008] **Figures 8A-8C** are top, side, and bottom views, respectively of the example inflatable paddle board shown in Figure 7.

DETAILED DESCRIPTION

[0009] An inflatable paddle board is disclosed. In an example, the inflatable paddle board may have two chambers on top of each other to create extra buoyancy and a larger rocker in the nose of the board. The two chambers may be made separately and combined (e.g., glued or otherwise adhered together). The top chamber may overhang the lower chamber by about 8 inches. However, other examples, including no overhang are also possible (e.g., depending on the desired shape of the board). For example, the design may include under- and/or overhanging inflatable chambers (e.g., the top chamber overhangs and/or under-hangs the bottom chamber). The two chambers may be connected with a tent (e.g., PVC or other suitable fabric), or be manufactured as drop stitch chambers.

[0010] In an example, an inflatable paddle board includes a lower inflatable chamber forming a stand-up board, and an upper inflatable chamber connected to the lower inflatable chamber, the upper inflatable chamber forming a rail around at least a portion of the lower inflatable chamber, and the combination of the lower and upper inflatable chambers forming a curve-shaped front hull. The rail is formed around a front and front-side portion of the lower inflatable chamber. The inflatable paddle board may also include a tent covering between the first inflatable chamber and the second inflatable chamber. In an example, the tent forms a separate inflatable air chamber.

[0011] An example method of constructing an inflatable paddle board includes forming a stand-up board area from a lower inflatable chamber. The method also includes connecting an upper inflatable chamber to the lower inflatable chamber to form a rail around at least a portion of the lower inflatable chamber. The method also includes providing a tent covering between the first inflatable chamber and the second inflatable chamber to form a curve-shaped front hull.

[0012] The example inflatable paddle board enables a flat stand-up board with a shaped front or bow (e.g., a curve shaped hull). The example inflatable paddle board provides a uniform, smooth, and responsive shape by connecting

inflatable chambers. The example inflatable paddle board also enables a conforming bow shape that provides the inflatable paddle board with a rocker shape that enables the bow to "punch" through whitewater more quickly, while still maintaining the nose of the inflatable paddle board above the water and surf.

[0013] Before continuing, it is noted that as used herein, the terms "includes" and "including" mean, but is not limited to, "includes" or "including" and "includes at least" or "including at least." The term "based on" means "based on" and "based at least in part on."

[0014] **Figure 1** is a top perspective view of an example inflatable paddle board 10. The example inflatable paddle board 10 may have at least one inflatable chamber. In an example, the inflatable paddle board includes two inflatable chambers (e.g., a first chamber and a second chamber). It is noted that the terms "first" and "second" are used herein to distinguish between separately formed chambers, but do not imply ordering or position (unless specifically referred to herein as an "upper" or "lower" chamber). More chambers may also be provided. In an example, the inflatable paddle board 10 includes a board chamber 12 to form a stand-up board area, and a rail chamber 14 to form a rail at least partially around the stand-up board area. The stand-up board area and/or rail may be formed of multiple chambers.

[0015] One or more chamber may be a drop stitch chamber. The term "drop stitch" is used herein to describe a manufacturing technique, wherein two sheets of fabric (e.g., polyester woven support fabric or other suitable material) is joined by many (e.g., thousands) of threads of predetermined length(s). The sewing needles sew a continuous thread back and forth between the two pieces of fabric, locking the fabric together at predetermined spacing(s) (e.g., the spacing based on the length of the threads between the fabrics). A side material can be applied, or the edges of the top and bottom fabrics can be attached. Following the sewing, an air-tight coating is applied to the outer surfaces of the fabric to provide an air-tight chamber that can be inflated. The process enables manufacture of a chamber that can be inflated to form a desired shape (e.g., a flat surfaced board structure). Other manufacturing techniques are also

contemplated as will be readily understood by those having ordinary skill in the art after becoming familiar with the teachings herein.

[0016] In an example, the lower chamber 12 is the shape and outline of a stand-up board. Hence, it may be referred to as the board chamber 12. The upper chamber 14 is generally U-shaped, and may have a flat or substantially flattened nose. The upper chamber 14 may be referred to as the rail chamber 14. The rail chamber 14 may be connected to the board chamber 12 (e.g., via glue, sewing, or otherwise).

[0017] In an example, the upper chamber 14 at least partially overhangs the lower chamber 12 at least 5% of the lower chamber length (e.g., by about 8 inches or about 15% of the lower chamber length) to provide extra stability. The upper chamber 14 may also overhang the lower chamber 12 on the side edges and/or the rear portion. In another example, the lower chamber 12 may at least partially overhang the upper chamber 14. In yet another example, the lower chamber 12 and the upper chamber 14 have a substantially equal perimeter and do not overhang one another.

[0018] In another example, the chamber 12 and the chamber 14 may be at least partially alongside one another. For example, the upper chamber 14 moves along the top of the lower chamber 12, and then goes outside the lower chamber 12 so that the upper chamber 14 can be level with the lower chamber 12. By way of illustration, the upper chamber 14 may be about three inches thick, and the lower chamber 12 is about six inches thick. This configuration allows the tent to create a rail shape above, below, or both above and below the chamber that is tracing the outside of the rail. The upper chamber 14 may be parallel with the bottom of the lower chamber 12.

[0019] In an example, a tent material may overlap between the lower chamber 12 and the upper chamber 14. The tent 16 may be made of PVC or other suitable material. The tent 16 may be connected (e.g., glued, sewed, or otherwise attached) to each chamber 12 and 14 and extend therebetween to cover the overlap between the chambers 12 and 14. The tent 16 forms a shape that is unique to this board, referred to herein as a "hull" shape, as it mimics the hull of a boat or ship. The tent 16 also forms a rail shape that gives the board

more stability. The shape also enables the rails of the board to slope outward and away from the center of the board chamber 12.

[0020] **Figures 2A-2F** are top and side views illustrating components and assembly of an example inflatable paddle board. **Figures 3A-3C** are top, side, and bottom views, respectively, of the example inflatable paddle board of Figures 2A-F shown assembled.

[0021] The inflatable paddle board 10 is shown as it may include an inflatable chamber 12 forming a stand-up board. This board chamber 12 may be raised at the front, back, and/or side(s), and may also include one or more fins 18. The inflatable paddle board 10 may also include an inflatable chamber 14 that is substantially U-shaped. This rail board 14 may be connected to the rail chamber 14. The rail chamber 14 may provide sidewalls forming a rail around at least a portion of the board chamber 12. In an example, the rail slopes inward towards a center of the board chamber 12. A tent 16 may cover the area between the board chamber 12 and the rail chamber 14 to form a curve-shaped front hull (see, e.g., Figures 2E-2F).

[0022] In an example, the rail chamber 14 at least partially overhangs the board chamber 12. For example, the rail chamber 14 may at least partially overhang the front portion of the board chamber 12. In an example, the rail chamber 14 overhangs the board chamber 12 by at least 15% of the length of the board chamber 12.

[0023] In an example, the board chamber 12 is wider than the rail chamber 14. In another example, the rail chamber 14 is wider than the board chamber 12. In another example, the board chamber 12 and the rail chamber 14 are the same width, and or the width may vary between the two chambers.

[0024] Before continuing, it should be noted that the examples described above are provided for purposes of illustration, and are not intended to be limiting. Other devices and/or device configurations may be utilized to carry out the operations described herein.

[0025] **Figures 4-6** are illustrations of the inflatable paddle board 10 shown in example use cases. In Figure 4, a user 1 is shown riding the inflatable paddle board 10 in a standing wave 2. In Figure 5, a user 1 is shown riding the

inflatable paddle board 10 in a whitewater river 3. In Figure 6, a user 1 is shown riding the inflatable paddle board 10 in larger whitewater 4.

[0026] The example inflatable paddle board 10 is shown with a lower inflatable drop stitch chamber (or board chamber) 12, an upper inflatable drop stitch chamber (or rail chamber) 14, and tent 16 connecting the board chamber 12 and the rail chamber 14. The rail chamber 14 is also shown as it may overhang the board chamber 12. The tent 16 is connected with each drop stitch layer so that the tent 16 remains taut when the chambers are inflated.

[0027] It is noted that the tent 16 may also be another chamber (e.g., drop stitch chamber), or the tent 16 may be part of the rail chamber 14 and/or board chamber 12 that is folded to connect to the bottom chamber. The tent 16 can be inflatable itself, or be made taut using other construction methods. In another example, the tent 16 can have an inflatable tube or chamber inside, e.g., to aid in pushing the tent structure outward and reduce slack.

[0028] The shape of the inflatable paddle board 10 provides a hull structure (e.g., at the front or bow and/or front-side of the board), thus providing extra buoyancy to help the user to navigate the inflatable paddle board 10, and also provides secondary (e.g., side-to-side) stability (e.g., for navigating whitewater).

[0029] As can be seen in Figures 4-6, the inflatable paddle board 10 is stable on a standing wave and/or on a river and even large whitewater. The inflatable paddle board 10 has a progressive shape throughout its length, enabling a user to paddle large whitewater on the river. The inflatable paddle board 10 also enables a rider to carve the board back and forth while riding on a standing wave.

[0030] **Figure 7** is a top perspective view of another example inflatable paddle board 20. **Figures 8A-8C** are top, side, and bottom views, respectively of the example inflatable paddle board 20 shown in Figure 7.

[0031] The inflatable paddle board 20 is shown as it may include a lower inflatable chamber 22. This lower chamber 22 may be raised at the front, back, and/or side(s), and may also include one or more fins 28. The inflatable paddle board 20 may also include an upper inflatable chamber 24. This upper chamber

24 may be connected to the lower chamber 22. A tent 26 may cover the area between the upper and lower chamber 22 and 24.

[0032] It is noted that the chambers 22 and 24 may be attached to one another by any suitable mechanism (e.g., glue, sewing). Likewise, the tent 26 may be attached by any suitable mechanism (e.g., glue, sewing). It is also noted that more than the two chambers 22 and 24 may be provided.

[0033] In an example, the lower chamber 22 at least partially overhangs the upper chamber 24. This shape enables the top of the board to slope inward, toward the center of the board, and creates a shape that is better for surfing. In an example, the lower chamber 22 is wider than the upper chamber 24. In another example (not shown), the upper chamber 24 is wider than the lower chamber 22. In another example, the chambers are the same width, and or the width may vary between the two chambers.

[0034] It is noted that in any of the above examples, the chambers may be at least partially above and/or below and/or at least partially side-by-side one another. In addition, more than two chambers may be provided. Furthermore, separate chambers may be fluidically interconnected with one another (e.g., at least one air passage therebetween), so that only one fill valve is needed to fill all chambers with air.

[0035] It is noted that the examples shown and described are provided for purposes of illustration and are not intended to be limiting. Still other examples are also contemplated.

CLAIMS

1. An inflatable paddle board, comprising:

a first inflatable chamber forming a stand-up board; and

a second inflatable chamber connected to the first inflatable chamber to form a curve-shaped front hull.

2. The inflatable paddle board of claim 1, wherein the second inflatable chamber at least partially overhangs the first inflatable chamber.

3. The inflatable paddle board of claim 2, wherein the second inflatable chamber overhangs a front portion of the first inflatable chamber.

4. The inflatable paddle board of claim 1, wherein the first inflatable chamber at least partially overhangs the second inflatable chamber, and the first and second inflatable chambers are interconnected with only one fill valve.

5. The inflatable paddle board of claim 4, wherein the first inflatable chamber overhangs a front portion of the second inflatable chamber.

6. The inflatable paddle board of claim 4, wherein the first inflatable chamber overhangs a rear portion of the second inflatable chamber.

7. The inflatable paddle board of claim 4, wherein the first inflatable chamber overhangs both a front portion and a rear portion of the second inflatable chamber.

8. The inflatable paddle board of claim 1, wherein the second inflatable chamber overhangs the first inflatable chamber for at least 5% of the length of the first inflatable chamber.

9. The inflatable paddle board of claim 1, further the second inflatable chamber under-hangs the first inflatable chamber for at least 5% of the length of the first inflatable chamber.

10. The inflatable paddle board of claim 1, wherein the first inflatable chamber is wider than the second inflatable chamber.

11. The inflatable paddle board of claim 1, wherein the second inflatable chamber has sidewalls to form a rail around at least a portion of the first inflatable chamber.

12. The inflatable paddle board of claim 11, wherein the rail slopes inward towards a center of the first inflatable chamber.

13. The inflatable paddle board of claim 1, wherein at least one of the first inflatable chamber and the second inflatable chamber are drop-stitch chambers.

14. The inflatable paddle board of claim 1, further comprising a tent covering between the first inflatable chamber and the second inflatable chamber.

15. The inflatable paddle board of claim 14, wherein the tent forms a separate inflatable air chamber.

16. An inflatable paddle board, comprising:

a lower inflatable chamber forming a stand-up board; and

an upper inflatable chamber connected to the lower inflatable chamber, the upper inflatable chamber forming a rail around at least a portion of the lower inflatable chamber, and the combination of the lower and upper inflatable chambers forming a curve-shaped front hull.

17. The inflatable paddle board of claim 16, further comprising a tent covering between the first inflatable chamber and the second inflatable chamber.

18. The inflatable paddle board of claim 17, wherein the tent forms a separate inflatable air chamber.

19. The inflatable paddle board of claim 16, wherein the rail is formed around a front and front-side portion of the lower inflatable chamber.

20. A method of constructing an inflatable paddle board, comprising:

forming a stand-up board area from a lower inflatable chamber; and

connecting an upper inflatable chamber to the lower inflatable chamber to form a rail around at least a portion of the lower inflatable chamber;

providing a tent covering between the first inflatable chamber and the second inflatable chamber to form a curve-shaped front hull.

ABSTRACT

An example inflatable paddle board includes a first inflatable chamber forming a stand-up board, and a second inflatable chamber connected to the first inflatable chamber to form a curve-shaped front hull. In an example, the second inflatable chamber at least partially overhangs the first inflatable chamber. In another example, the first inflatable chamber at least partially overhangs the second inflatable chamber. A tent may cover between the first inflatable chamber and the second inflatable chamber.

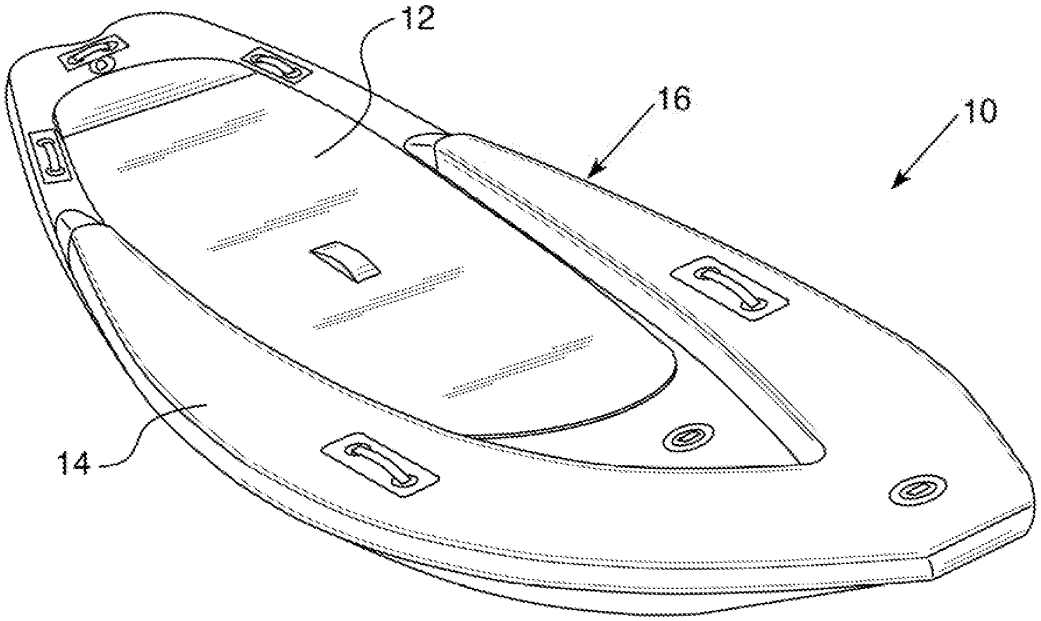

FIG. 1

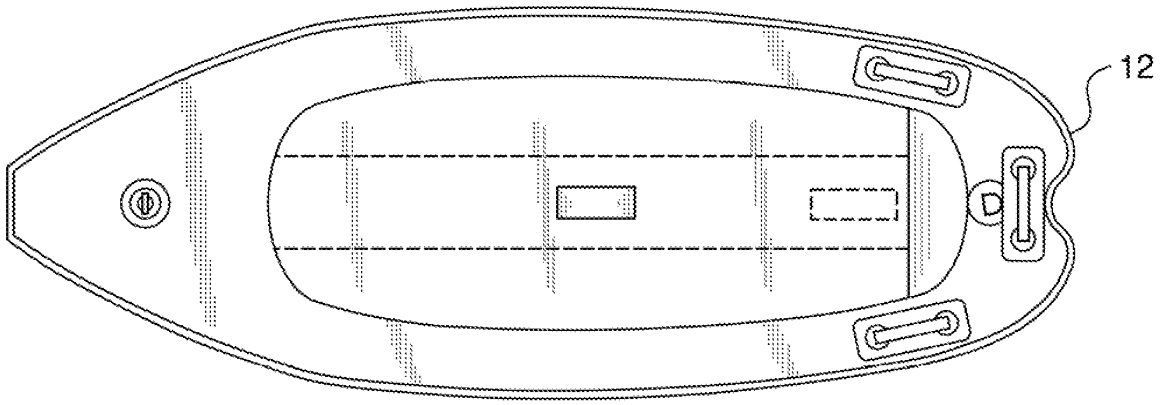

FIG. 2A

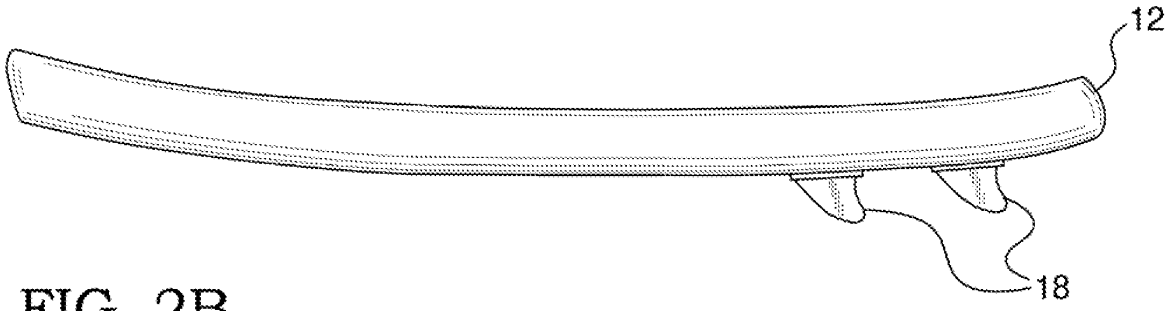

FIG. 2B

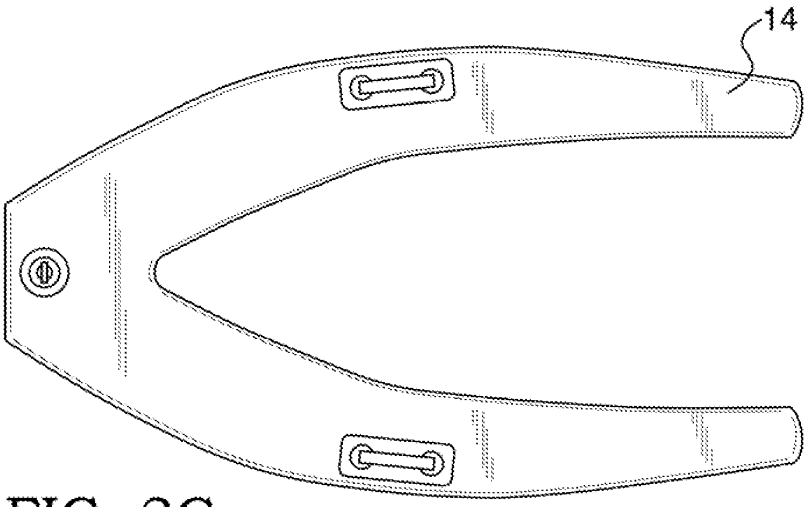

FIG. 2C

FIG. 2D

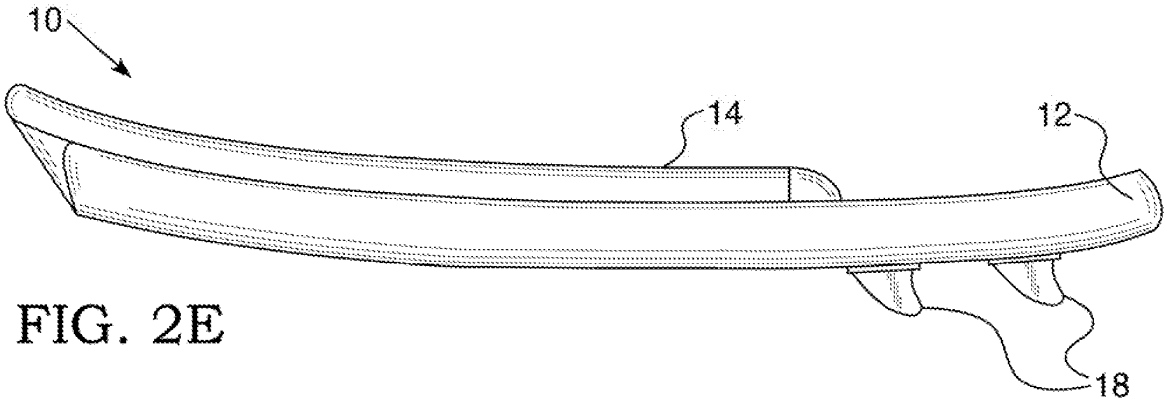

FIG. 2E

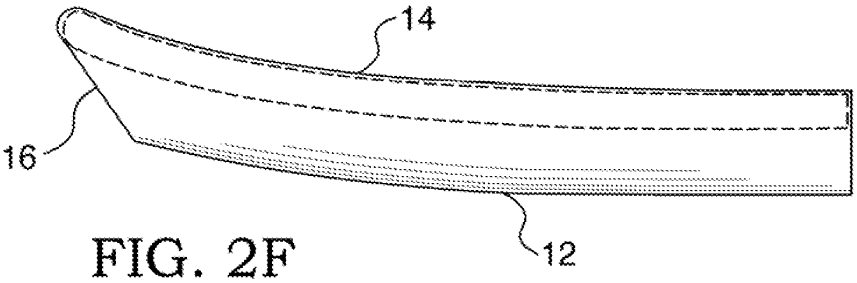

FIG. 2F

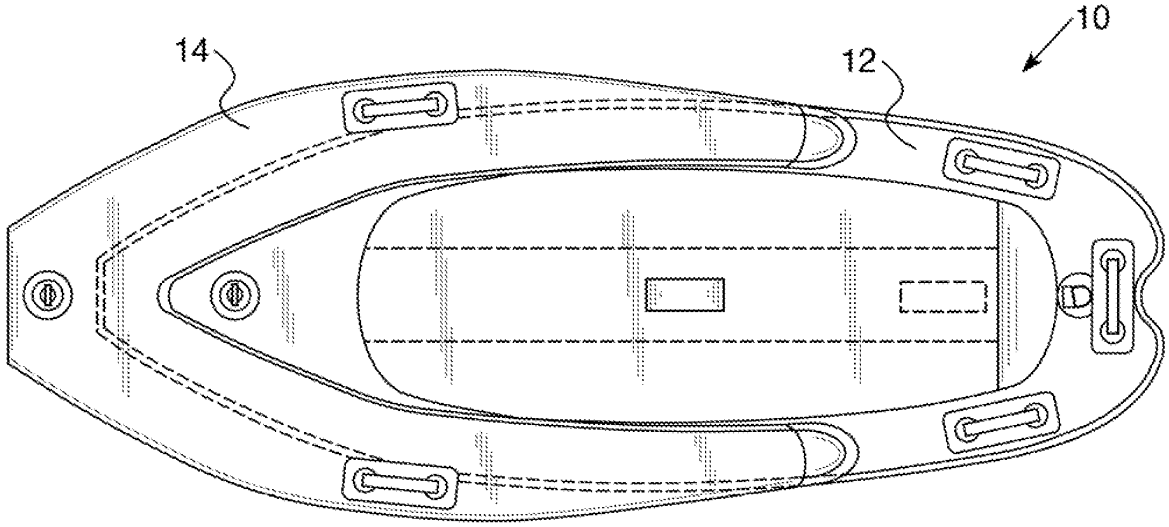

FIG. 3A

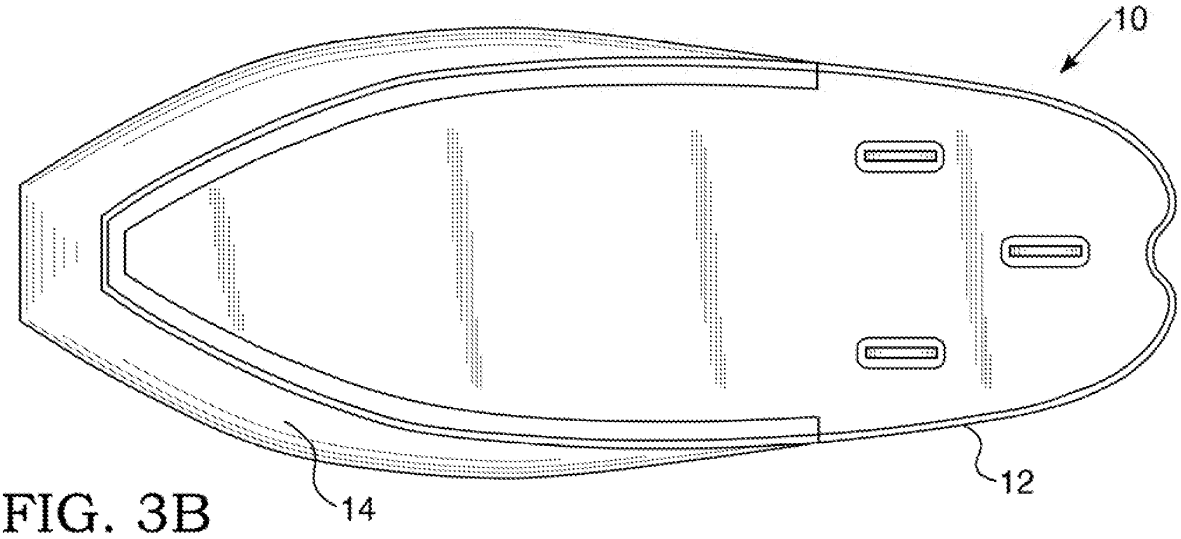

FIG. 3B

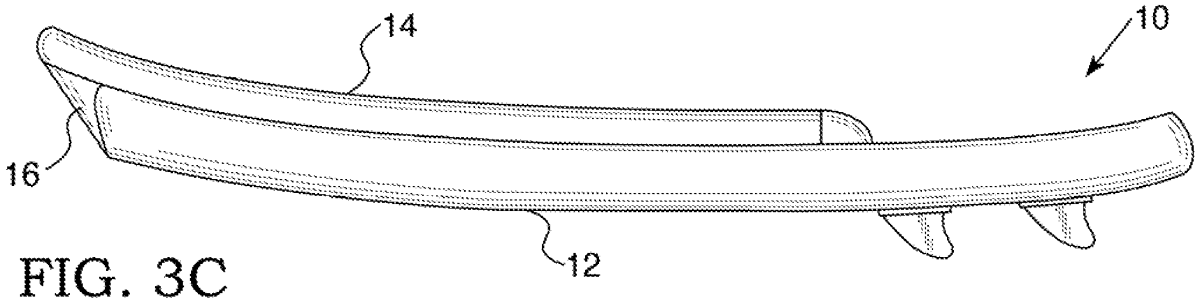

FIG. 3C

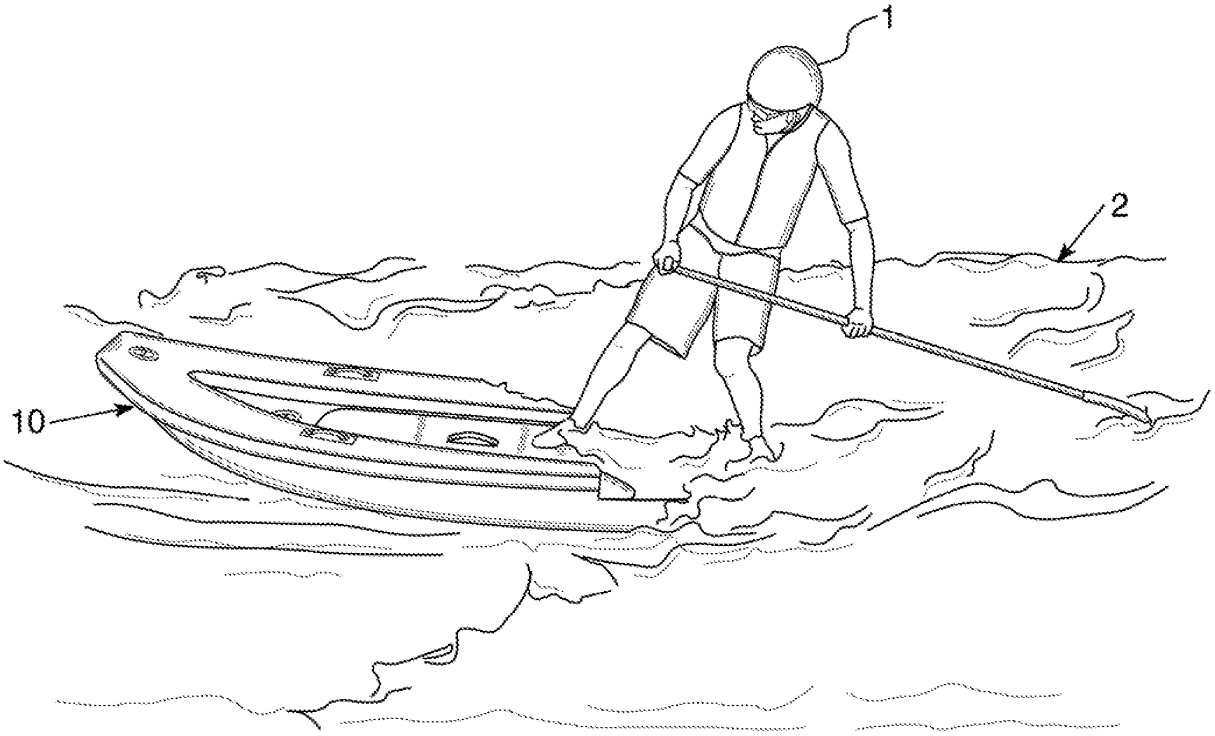

FIG. 4

FIG. 5

FIG. 6

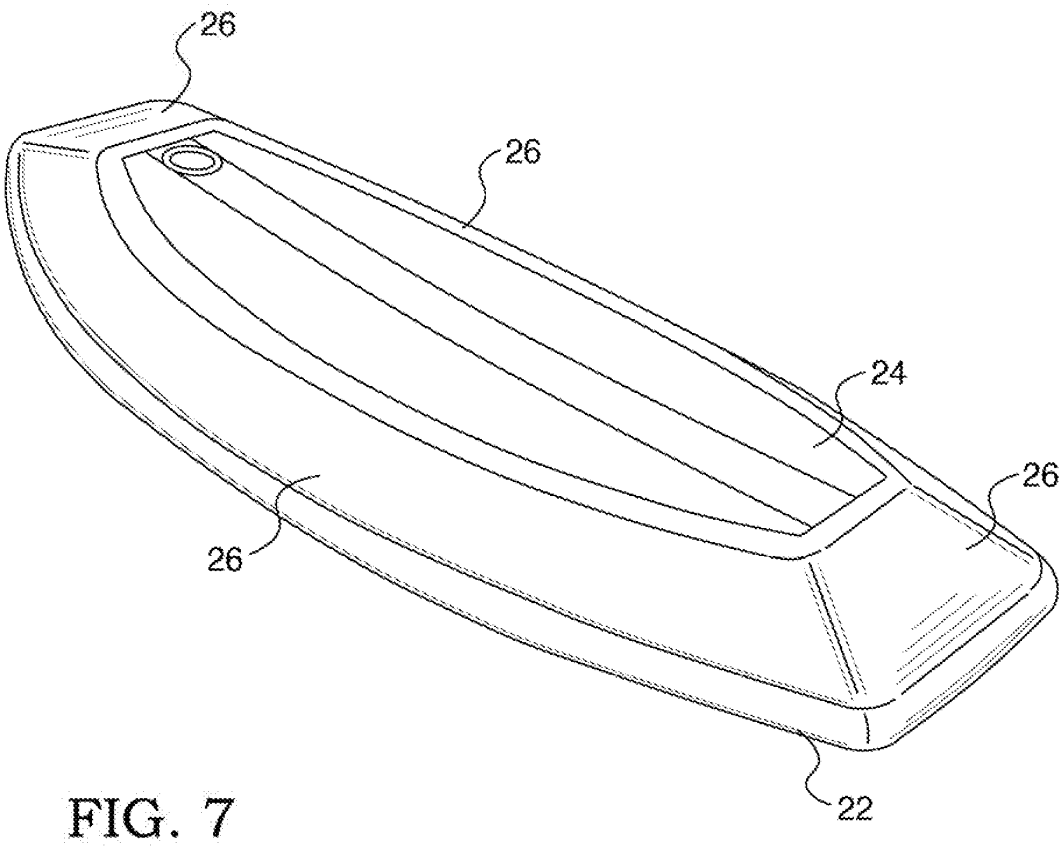

FIG. 7

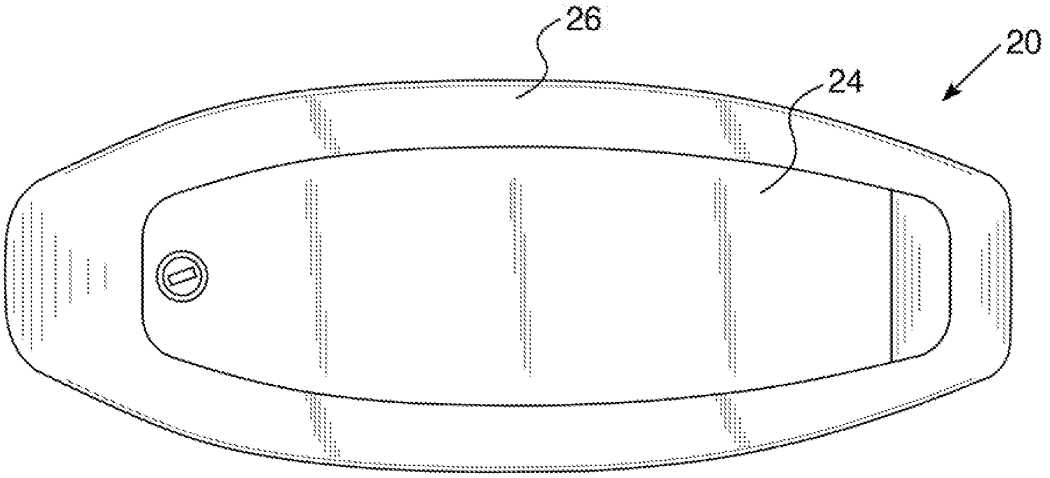

FIG. 8A

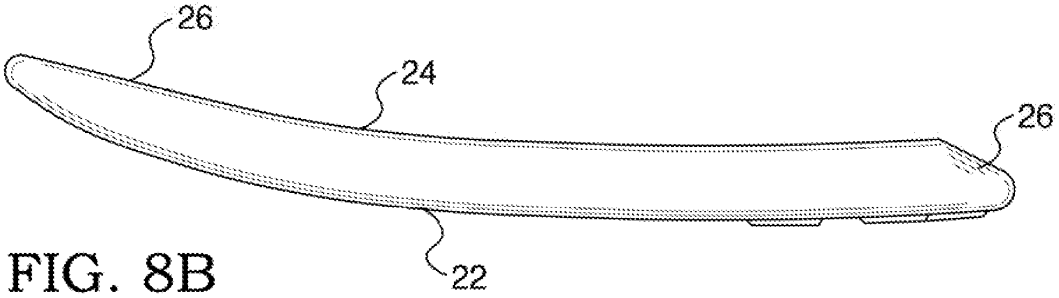

FIG. 8B

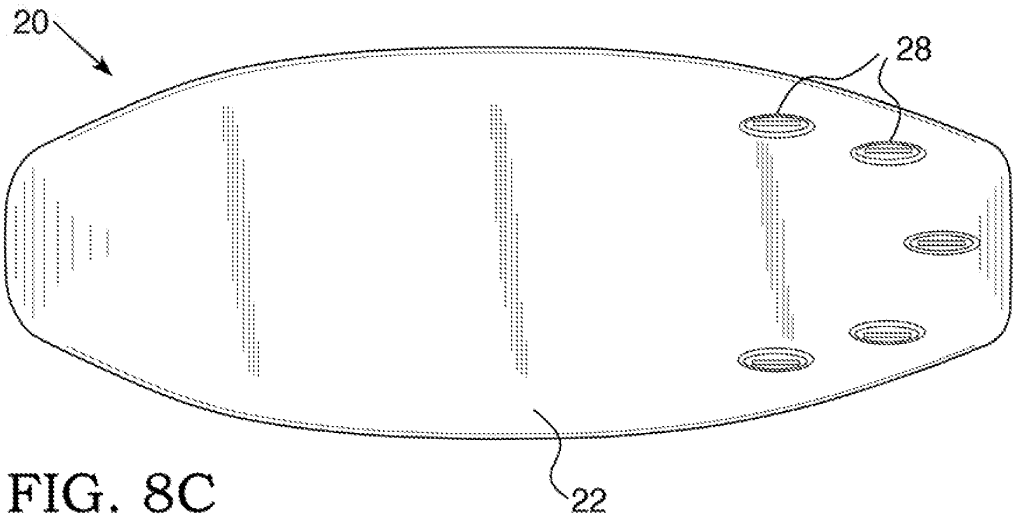

FIG. 8C

Electronic Patent Application Fee Transmittal

Application Number:	
Filing Date:	
Title of Invention:	Inflatable Paddle Board
First Named Inventor/Applicant Name:	Peter Hall
Filer:	Mark D Trenner
Attorney Docket Number:	3520-002-USP

Filed as Small Entity

Filing Fees for Utility under 35 USC 111(a)

Description	Fee Code	Quantity	Amount	Sub-Total in USD($)
Basic Filing:				
Utility filing Fee (Electronic filing)	4011	1	70	70
Utility Search Fee	2111	1	300	300
Utility Examination Fee	2311	1	360	360
Pages:				
Claims:				
Miscellaneous-Filing:				
Petition:				
Patent-Appeals-and-Interference:				

Description	Fee Code	Quantity	Amount	Sub-Total in USD($)
Post-Allowance-and-Post-Issuance:				
Extension-of-Time:				
Miscellaneous:				
		Total in USD ($)		**730**

Electronic Acknowledgement Receipt	
EFS ID:	26569013
Application Number:	15230435
International Application Number:	
Confirmation Number:	2775
Title of Invention:	Inflatable Paddle Board
First Named Inventor/Applicant Name:	Peter Hall
Customer Number:	46317
Filer:	Mark D Trenner
Filer Authorized By:	
Attorney Docket Number:	3520-002-USP
Receipt Date:	07-AUG-2016
Filing Date:	
Time Stamp:	12:19:27
Application Type:	Utility under 35 USC 111(a)

Payment information:

Submitted with Payment	yes
Payment Type	CARD
Payment was successfully received in RAM	$730
RAM confirmation Number	080816INTEFSW12210500
Deposit Account	8712
Authorized User	Mark Trenner
The Director of the USPTO is hereby authorized to charge indicated fees and credit any overpayment as follows:	

File Listing:

Document Number	Document Description	File Name	File Size(Bytes)/ Message Digest	Multi Part /.zip	Pages (if appl.)
1	Application Data Sheet	3520-002-USP-ADS-EFS.pdf	1063601 120807d1e64ce5affcbf409be25950af7e9577ab	no	5
Warnings:					
Information:					
This is not an USPTO supplied ADS fillable form					
2	Oath or Declaration filed	3520-002-USP-Declaration-EFS.pdf	766922 3e8a856dc602863eefbe9fa98e794f4ce1ca4af9	no	1
Warnings:					
Information:					
3	Assignee showing of ownership per 37 CFR 3.73	3520-002-USP-Statement-EFS.pdf	2007636 11270e45c61aace8439a1c9b10bbd12320f59f72	no	4
Warnings:					
Information:					
4	Power of Attorney	3520-002-USP-POA-EFS.pdf	1449730 8754461a015abdb3219e85348ce9e640152f920d	no	2
Warnings:					
Information:					
5		3520-002-USP-PatApp-EFS.pdf	4382876 3098fddb6554d0e136fbcdb87d4d568d358437bc	yes	19

Multipart Description/PDF files in .zip description

Document Description	Start	End
Specification	1	7
Claims	8	10

	Abstract		11	11	
	Drawings-only black and white line drawings		12	19	
Warnings:					
Information:					
6	Fee Worksheet (SB06)	fee-info.pdf	34386 8e387d2503b285c5a2d4c4b2d3f51053167066a3	no	2
Warnings:					
Information:					
		Total Files Size (in bytes):	9705151		

This Acknowledgement Receipt evidences receipt on the noted date by the USPTO of the indicated documents, characterized by the applicant, and including page counts, where applicable. It serves as evidence of receipt similar to a Post Card, as described in MPEP 503.

<u>New Applications Under 35 U.S.C. 111</u>
If a new application is being filed and the application includes the necessary components for a filing date (see 37 CFR 1.53(b)-(d) and MPEP 506), a Filing Receipt (37 CFR 1.54) will be issued in due course and the date shown on this Acknowledgement Receipt will establish the filing date of the application.

<u>National Stage of an International Application under 35 U.S.C. 371</u>
If a timely submission to enter the national stage of an international application is compliant with the conditions of 35 U.S.C. 371 and other applicable requirements a Form PCT/DO/EO/903 indicating acceptance of the application as a national stage submission under 35 U.S.C. 371 will be issued in addition to the Filing Receipt, in due course.

<u>New International Application Filed with the USPTO as a Receiving Office</u>
If a new international application is being filed and the international application includes the necessary components for an international filing date (see PCT Article 11 and MPEP 1810), a Notification of the International Application Number and of the International Filing Date (Form PCT/RO/105) will be issued in due course, subject to prescriptions concerning national security, and the date shown on this Acknowledgement Receipt will establish the international filing date of the application.

PTO/AIA/14 (03-13)
Approved for use through 01/31/2014. OMB 0651-0032
U.S. Patent and Trademark Office; U.S. DEPARTMENT OF COMMERCE
Under the Paperwork Reduction Act of 1995, no persons are required to respond to a collection of information unless it contains a valid OMB control number.

Application Data Sheet 37 CFR 1.76	Attorney Docket Number	3520-002-USP
	Application Number	
Title of Invention	Inflatable Paddle Board	

The application data sheet is part of the provisional or nonprovisional application for which it is being submitted. The following form contains the bibliographic data arranged in a format specified by the United States Patent and Trademark Office as outlined in 37 CFR 1.76.
This document may be completed electronically and submitted to the Office in electronic format using the Electronic Filing System (EFS) or the document may be printed and included in a paper filed application.

Secrecy Order 37 CFR 5.2

☐ Portions or all of the application associated with this Application Data Sheet may fall under a Secrecy Order pursuant to 37 CFR 5.2 (Paper filers only. Applications that fall under Secrecy Order may not be filed electronically.)

Inventor Information:

Inventor 1 Remove

Legal Name

Prefix	Given Name	Middle Name	Family Name	Suffix
	Peter		Hall	

Residence Information (Select One) ◉ US Residency ○ Non US Residency ○ Active US Military Service

City	Steamboat Springs	State/Province	CO	Country of Residence	US

Mailing Address of Inventor:

Address 1	PO Box 771685		
Address 2			
City	Steamboat Springs	State/Province	CO
Postal Code	80477	Country i	US

All Inventors Must Be Listed - Additional Inventor Information blocks may be generated within this form by selecting the **Add** button. Add

Correspondence Information:

Enter either Customer Number or complete the Correspondence Information section below. For further information see 37 CFR 1.33(a).

☐ **An Address is being provided for the correspondence Information of this application.**

Customer Number	46317		
Email Address	mark@us-patentattorney.com	Add Email	Remove Email

Application Information:

Title of the Invention	Inflatable Paddle Board		
Attorney Docket Number	3520-002-USP	Small Entity Status Claimed	☐
Application Type	Nonprovisional		
Subject Matter	Utility		
Total Number of Drawing Sheets (if any)	8	Suggested Figure for Publication (if any)	

Under the Paperwork Reduction Act of 1995, no persons are required to respond to a collection of information unless it contains a valid OMB control number.

Application Data Sheet 37 CFR 1.76	Attorney Docket Number	3520-002-USP
	Application Number	
Title of Invention	Inflatable Paddle Board	

Publication Information:

☐ Request Early Publication (Fee required at time of Request 37 CFR 1.219)

☐ **Request Not to Publish.** I hereby request that the attached application not be published under 35 U.S.C. 122(b) and certify that the invention disclosed in the attached application **has not and will not** be the subject of an application filed in another country, or under a multilateral international agreement, that requires publication at eighteen months after filing.

Representative Information:

Representative information should be provided for all practitioners having a power of attorney in the application. Providing this information in the Application Data Sheet does not constitute a power of attorney in the application (see 37 CFR 1.32).
Either enter Customer Number or complete the Representative Name section below. If both sections are completed the customer Number will be used for the Representative Information during processing.

Please Select One:	◉ Customer Number	○ US Patent Practitioner	○ Limited Recognition (37 CFR 11.9)
Customer Number	46317		

Domestic Benefit/National Stage Information:

This section allows for the applicant to either claim benefit under 35 U.S.C. 119(e), 120, 121, or 365(c) or indicate National Stage entry from a PCT application. Providing this information in the application data sheet constitutes the specific reference required by 35 U.S.C. 119(e) or 120, and 37 CFR 1.78.

Prior Application Status	Pending		Remove
Application Number	Continuity Type	Prior Application Number	Filing Date (YYYY-MM-DD)
	non provisional of	62202549	2015-08-07

Additional Domestic Benefit/National Stage Data may be generated within this form by selecting the **Add** button.

Foreign Priority Information:

This section allows for the applicant to claim priority to a foreign application. Providing this information in the application data sheet constitutes the claim for priority as required by 35 U.S.C. 119(b) and 37 CFR 1.55(d). When priority is claimed to a foreign application that is eligible for retrieval under the priority document exchange program (PDX)[i] the information will be used by the Office to automatically attempt retrieval pursuant to 37 CFR 1.55(h)(1) and (2). Under the PDX program, applicant bears the ultimate responsibility for ensuring that a copy of the foreign application is received by the Office from the participating foreign intellectual property office, or a certified copy of the foreign priority application is filed, within the time period specified in 37 CFR 1.55(g)(1).

			Remove
Application Number	Country[i]	Filing Date (YYYY-MM-DD)	Access Code[i] (if applicable)

Additional Foreign Priority Data may be generated within this form by selecting the **Add** button.

Application Data Sheet 37 CFR 1.76	Attorney Docket Number	3520-002-USP
	Application Number	
Title of Invention	Inflatable Paddle Board	

Statement under 37 CFR 1.55 or 1.78 for AIA (First Inventor to File) Transition Applications

☐ This application (1) claims priority to or the benefit of an application filed before March 16, 2013 and (2) also contains, or contained at any time, a claim to a claimed invention that has an effective filing date on or after March 16, 2013.
NOTE: By providing this statement under 37 CFR 1.55 or 1.78, this application, with a filing date on or after March 16, 2013, will be examined under the first inventor to file provisions of the AIA.

Authorization to Permit Access:

☐ Authorization to Permit Access to the Instant Application by the Participating Offices

If checked, the undersigned hereby grants the USPTO authority to provide the European Patent Office (EPO), the Japan Patent Office (JPO), the Korean Intellectual Property Office (KIPO), the World Intellectual Property Office (WIPO), and any other intellectual property offices in which a foreign application claiming priority to the instant patent application is filed access to the instant patent application. See 37 CFR 1.14(c) and (h). This box should not be checked if the applicant does not wish the EPO, JPO, KIPO, WIPO, or other intellectual property office in which a foreign application claiming priority to the instant patent application is filed to have access to the instant patent application.

In accordance with 37 CFR 1.14(h)(3), access will be provided to a copy of the instant patent application with respect to: 1) the instant patent application-as-filed; 2) any foreign application to which the instant patent application claims priority under 35 U.S.C. 119(a)-(d) if a copy of the foreign application that satisfies the certified copy requirement of 37 CFR 1.55 has been filed in the instant patent application; and 3) any U.S. application-as-filed from which benefit is sought in the instant patent application.

In accordance with 37 CFR 1.14(c), access may be provided to information concerning the date o f filing this Authorization.

Applicant Information:

Providing assignment information in this section does not substitute for compliance with any requirement of part 3 of Title 37 of CFR to have an assignment recorded by the Office.

PTO/AIA/14 (03-13)
Approved for use through 01/31/2014. OMB 0651-0032
U.S. Patent and Trademark Office; U.S. DEPARTMENT OF COMMERCE
Under the Paperwork Reduction Act of 1995, no persons are required to respond to a collection of information unless it contains a valid OMB control number.

Application Data Sheet 37 CFR 1.76	Attorney Docket Number	3520-002-USP
	Application Number	
Title of Invention	Inflatable Paddle Board	

Applicant 1

If the applicant is the inventor (or the remaining joint inventor or inventors under 37 CFR 1.45), this section should not be completed. The information to be provided in this section is the name and address of the legal representative who is the applicant under 37 CFR 1.43; or the name and address of the assignee, person to whom the inventor is under an obligation to assign the invention, or person who otherwise shows sufficient proprietary interest in the matter who is the applicant under 37 CFR 1.46. If the applicant is an applicant under 37 CFR 1.46 (assignee, person to whom the inventor is obligated to assign, or person who otherwise shows sufficient proprietary interest) together with one or more joint inventors, then the joint inventor or inventors who are also the applicant should be identified in this section.

Clear

◉ Assignee	○ Legal Representative under 35 U.S.C. 117	○ Joint Inventor
○ Person to whom the inventor is obligated to assign.	○ Person who shows sufficient proprietary interest	

If applicant is the legal representative, indicate the authority to file the patent application, the inventor is:

Name of the Deceased or Legally Incapacitated Inventor :

If the Applicant is an Organization check here. ☒

Organization Name	Twitch, LLC		
Mailing Address Information For Applicant:			
Address 1	1051 13th Street, No. 77165		
Address 2			
City	Steamboat Springs	**State/Province**	CO
Country	US	Postal Code	80487
Phone Number		Fax Number	
Email Address			

Additional Applicant Data may be generated within this form by selecting the Add button.

Assignee Information including Non-Applicant Assignee Information:

Providing assignment information in this section does not subsitute for compliance with any requirement of part 3 of Title 37 of CFR to have an assignment recorded by the Office.

Assignee 1

Complete this section if assignee information, including non-applicant assignee information, is desired to be included on the patent application publication . An assignee-applicant identified in the "Applicant Information" section will appear on the patent application publication as an applicant. For an assignee-applicant, complete this section only if identification as an assignee is also desired on the patent application publication.

If the Assignee is an Organization check here. ☐

Under the Paperwork Reduction Act of 1995, no persons are required to respond to a collection of information unless it contains a valid OMB control number.

Application Data Sheet 37 CFR 1.76	Attorney Docket Number	3520-002-USP
	Application Number	
Title of Invention	Inflatable Paddle Board	

Prefix	**Given Name**	Middle Name	**Family Name**	Suffix

Mailing Address Information For Non-Applicant Assignee:			
Address 1			
Address 2			
City		**State/Province**	
Country		Postal Code	
Phone Number		Fax Number	
Email Address			

Additional Assignee Data may be generated within this form by selecting the Add button.

Signature:

NOTE: This form must be signed in accordance with 37 CFR 1.33. See 37 CFR 1.4 for signature requirements and certifications.

Signature	/Mark D. Trenner/			Date (YYYY-MM-DD)	2016-08-07
First Name	Mark D.	Last Name	Trenner	Registration Number	43961

Additional Signature may be generated within this form by selecting the Add button.

This collection of information is required by 37 CFR 1.76. The information is required to obtain or retain a benefit by the public which is to file (and by the USPTO to process) an application. Confidentiality is governed by 35 U.S.C. 122 and 37 CFR 1.14. This collection is estimated to take 23 minutes to complete, including gathering, preparing, and submitting the completed application data sheet form to the USPTO. Time will vary depending upon the individual case. Any comments on the amount of time you require to complete this form and/or suggestions for reducing this burden, should be sent to the Chief Information Officer, U.S. Patent and Trademark Office, U.S. Department of Commerce, P.O. Box 1450, Alexandria, VA 22313-1450. DO NOT SEND FEES OR COMPLETED FORMS TO THIS ADDRESS. **SEND TO: Commissioner for Patents, P.O. Box 1450, Alexandria, VA 22313-1450.**

PTO/AIA/01 (06-12)
Approved for use through 01/31/2014. OMB 0651-0032
U.S. Patent and Trademark Office; U.S. DEPARTMENT OF COMMERCE
Under the Paperwork Reduction Act of 1995, no persons are required to respond to a collection of information unless it displays a valid OMB control number.

DECLARATION (37 CFR 1.63) FOR UTILITY OR DESIGN APPLICATION USING AN APPLICATION DATA SHEET (37 CFR 1.76)

Title of Invention	Inflatable Paddle Board

As the below named inventor, I hereby declare that:

This declaration is directed to:

- [x] The attached application, or
- [ ] United States application or PCT international application number _____

  filed on _____.

The above-identified application was made or authorized to be made by me.

I believe that I am the original inventor or an original joint inventor of a claimed invention in the application.

I hereby acknowledge that any willful false statement made in this declaration is punishable under 18 U.S.C. 1001 by fine or imprisonment of not more than five (5) years, or both.

WARNING:

Petitioner/applicant is cautioned to avoid submitting personal information in documents filed in a patent application that may contribute to identity theft. Personal information such as social security numbers, bank account numbers, or credit card numbers (other than a check or credit card authorization form PTO-2038 submitted for payment purposes) is never required by the USPTO to support a petition or an application. If this type of personal information is included in documents submitted to the USPTO, petitioners/applicants should consider redacting such personal information from the documents before submitting them to the USPTO. Petitioner/applicant is advised that the record of a patent application is available to the public after publication of the application (unless a non-publication request in compliance with 37 CFR 1.213(a) is made in the application) or issuance of a patent. Furthermore, the record from an abandoned application may also be available to the public if the application is referenced in a published application or an issued patent (see 37 CFR 1.14). Checks and credit card authorization forms PTO-2038 submitted for payment purposes are not retained in the application file and therefore are not publicly available.

LEGAL NAME OF INVENTOR

Inventor: Peter Hall Date (Optional) : _____

Signature: Peter Hall

Note: An application data sheet (PTO/SB/14 or equivalent), including naming the entire inventive entity, must accompany this form or must have been previously filed. Use an additional PTO/AIA/01 form for each additional inventor.

This collection of information is required by 35 U.S.C. 115 and 37 CFR 1.63. The information is required to obtain or retain a benefit by the public which is to file (and by the USPTO to process) an application. Confidentiality is governed by 35 U.S.C. 122 and 37 CFR 1.11 and 1.14. This collection is estimated to take 1 minute to complete, including gathering, preparing, and submitting the completed application form to the USPTO. Time will vary depending upon the individual case. Any comments on the amount of time you require to complete this form and/or suggestions for reducing this burden, should be sent to the Chief Information Officer, U.S. Patent and Trademark Office, U.S. Department of Commerce, P.O. Box 1450, Alexandria, VA 22313-1450. DO NOT SEND FEES OR COMPLETED FORMS TO THIS ADDRESS. **SEND TO: Commissioner for Patents, P.O. Box 1450, Alexandria, VA 22313-1450.**

If you need assistance in completing the form, call 1-800-PTO-9199 and select option 2.

PTO/AIA/96 (08-12)
Approved for use through 01/31/2013. OMB 0651-0031
U.S. Patent and Trademark Office; U.S. DEPARTMENT OF COMMERCE
Under the Paperwork Reduction Act of 1995, no persons are required to respond to a collection of information unless it displays a valid OMB control number.

STATEMENT UNDER 37 CFR 3.73(c)

Applicant/Patent Owner: Peter Hall

Application No./Patent No.: _____ Filed/Issue Date: _____

Titled: Inflatable Paddle Board

Twitch, LLC, a Limited Liability Company

(Name of Assignee) (Type of Assignee, e.g., corporation, partnership, university, government agency, etc.)

states that, for the patent application/patent identified above, it is (choose **one** of options 1, 2, 3 or 4 below):

1. ☑ The assignee of the entire right, title, and interest.

2. ☐ An assignee of less than the entire right, title, and interest (check applicable box):

☐ The extent (by percentage) of its ownership interest is _____%. Additional Statement(s) by the owners holding the balance of the interest must be submitted to account for 100% of the ownership interest.

☐ There are unspecified percentages of ownership. The other parties, including inventors, who together own the entire right, title and interest are:

Additional Statement(s) by the owner(s) holding the balance of the interest must be submitted to account for the entire right, title, and interest.

3. ☐ The assignee of an undivided interest in the entirety (a complete assignment from one of the joint inventors was made). The other parties, including inventors, who together own the entire right, title, and interest are:

Additional Statement(s) by the owner(s) holding the balance of the interest must be submitted to account for the entire right, title, and interest.

4. ☐ The recipient, via a court proceeding or the like (*e.g.*, bankruptcy, probate), of an undivided interest in the entirety (a complete transfer of ownership interest was made). The certified document(s) showing the transfer is attached.

The interest identified in option 1, 2 or 3 above (not option 4) is evidenced by either (choose **one** of options A or B below):

A. ☑ An assignment from the inventor(s) of the patent application/patent identified above. The assignment was recorded in the United States Patent and Trademark Office at Reel _____, Frame _____, or for which a copy thereof is attached.

B. ☐ A chain of title from the inventor(s), of the patent application/patent identified above, to the current assignee as follows:

1. From: _____ To: _____

The document was recorded in the United States Patent and Trademark Office at

Reel _____, Frame _____, or for which a copy thereof is attached.

2. From: _____ To: _____

The document was recorded in the United States Patent and Trademark Office at

Reel _____, Frame _____, or for which a copy thereof is attached.

This collection of information is required by 37 CFR 3.73(b). The information is required to obtain or retain a benefit by the public which is to file (and by the USPTO to process) an application. Confidentiality is governed by 35 U.S.C. 122 and 37 CFR 1.11 and 1.14. This collection is estimated to take 12 minutes to complete, including gathering, preparing, and submitting the completed application form to the USPTO. Time will vary depending upon the individual case. Any comments on the amount of time you require to complete this form and/or suggestions for reducing this burden, should be sent to the Chief Information Officer, U.S. Patent and Trademark Office, U.S. Department of Commerce, P.O. Box 1450, Alexandria, VA 22313-1450. DO NOT SEND FEES OR COMPLETED FORMS TO THIS ADDRESS. **SEND TO: Commissioner for Patents, P.O. Box 1450, Alexandria, VA 22313-1450.**

If you need assistance in completing the form, call 1-800-PTO-9199 and select option 2.

PTO/AIA/96 (08-12)
Approved for use through 01/31/2013. OMB 0651-0031
U.S. Patent and Trademark Office; U.S. DEPARTMENT OF COMMERCE
Under the Paperwork Reduction Act of 1995, no persons are required to respond to a collection of information unless it displays a valid OMB control number.

STATEMENT UNDER 37 CFR 3.73(c)

3. From: _____ To: _____

The document was recorded in the United States Patent and Trademark Office at

Reel _____, Frame _____, or for which a copy thereof is attached.

4. From: _____ To: _____

The document was recorded in the United States Patent and Trademark Office at

Reel _____, Frame _____, or for which a copy thereof is attached.

5. From: _____ To: _____

The document was recorded in the United States Patent and Trademark Office at

Reel _____, Frame _____, or for which a copy thereof is attached.

6. From: _____ To: _____

The document was recorded in the United States Patent and Trademark Office at

Reel _____, Frame _____, or for which a copy thereof is attached.

☐ Additional documents in the chain of title are listed on a supplemental sheet(s).

☑ As required by 37 CFR 3.73(c)(1)(i), the documentary evidence of the chain of title from the original owner to the assignee was, or concurrently is being, submitted for recordation pursuant to 37 CFR 3.11.

[NOTE: A separate copy (i.e., a true copy of the original assignment document(s)) must be submitted to Assignment Division in accordance with 37 CFR Part 3, to record the assignment in the records of the USPTO. See MPEP 302.08]

The undersigned (whose title is supplied below) is authorized to act on behalf of the assignee.

/Mark D. Trenner/	August 7, 2016
Signature	Date
Mark D. Trenner	43961
Printed or Typed Name	Title or Registration Number

ASSIGNMENT OF PATENT APPLICATION

The undersigned ASSIGNORS, have agreed and hereby agree to assign to ASSIGNEE, wherein:

ASSIGNORS: **Peter Hall**

ASSIGNEE: **TWITCH LLC, a Colorado Limited Liability Company, having offices at 1051 13th Street, No. 77165, Steamboat Springs, Colorado, 80487**

FOR good and valuable consideration, the receipt of which is hereby acknowledged, ASSIGNOR hereby sells, assigns, and transfers to **ASSIGNEE**, its successors and assigns, the entire right, title, and interest, including the right of priority, in, to, and under application(s) for patent as follows:

ATTORNEY REF. NO.:	**3520-002-USP**
APPLICATION TYPE:	**Utility – non-provisional**
APPLICATION NO:	**[To Be Entered By Attorney]**
TITLE:	**Inflatable Paddle Board**
INVENTOR(S):	**Peter Hall**
FILING DATE:	**[To Be Entered By Attorney]**

AND the invention and improvements set forth therein, and any and all applications, continuations, continuations-in-part (C-I-Ps), divisionals, and renewals of and substitutes resulting from said application for patent, and any and all Letters Patent of the United States, PCT, and of countries foreign thereto which may be granted thereon or therefor; and any reissues, or re-examinations, or extensions of said application for patent.

ASSIGNORS additionally authorize **ASSIGNEE** to file applications in my name for Letters Patent in any country, to be held and enjoyed by **ASSIGNEE**, its successors, assigns, nominees or legal representatives, to the full end of the term or terms for which said Letters Patent respectively may be granted, reissued or extended, as fully and entirely as the same would have been held and enjoyed by me had this assignment, sale, and transfer not been made;

AND **ASSIGNORS** hereby covenants that **ASSIGNORS** have full right to convey the entire interest herein assigned, and that **ASSIGNORS** have not executed and will not execute any agreement in conflict herewith, and **ASSIGNORS** further covenant and agree that **ASSIGNORS** will, each time a request is made, and without undue delay, execute and deliver all such papers as may be necessary or

desirable to perfect the title to said invention(s) or improvement(s), said applications and said Letters Patent(s), to **ASSIGNEE**, its successors, assigns, nominees, or legal representatives, and **ASSIGNORS** agree to communicate to **ASSIGNEE**, or to its nominee, all known facts respecting said invention(s) or improvement(s), said application(s) and said Letters Patent(s), to testify in any legal proceedings, to sign all lawful papers, to execute all disclaimers and divisionals, continuations, C-I-Ps, reissue and foreign applications, to make all rightful oaths and declarations, and generally to do everything possible to aid **ASSIGNEE**, its successors, assigns, nominees and legal representatives to obtain and enforce, for its or their own benefit, proper patent protection for said invention(s) or improvement(s) in any and all countries provided the expenses which may be incurred by me in lending such cooperation and assistance are paid by **ASSIGNEE**.

AND **ASSIGNORS** hereby authorize and request the Commissioner of Patents and Trademarks of the United States and any official of any country or countries foreign to the United States whose duty it is to issue patents on applications as aforesaid, to issue to **ASSIGNEE**, as assignee of the entire right, title, and interest, any and all Letters Patent for said invention(s) or improvement(s), including any and all Letters Patent of the United States which may be issued and granted on or as a result of the application aforesaid, in accordance with the terms of this assignment.

IN WITNESS WHEREOF, as **ASSIGNOR** I/We hereunto set my hand and affixed my seal on the date set forth hereinafter.

ASSIGNOR: *Peter Hall*

Date: 8/6/16

STATE OF Utah)
) ss
COUNTY OF Salt Lake)

Before me this 6th day of August in the year of 2016 personally appeared **Peter Hall**, known to me to be the individual who executed the foregoing instrument, and who acknowledged to me that he executed the same of his/her own free will and for the purpose therein set forth.

My commission expires: December 14, 2016

[SEAL]

Notary Public

NOTARY PUBLIC
RICARDO OLIVAS
691887
COMMISSION EXPIRES
DECEMBER 14, 2016
STATE OF UTAH

UNITED STATES PATENT AND TRADEMARK OFFICE

UNITED STATES DEPARTMENT OF COMMERCE
United States Patent and Trademark Office
Address: COMMISSIONER FOR PATENTS
P.O. Box 1450
Alexandria, Virginia 22313-1450
www.uspto.gov

APPLICATION NUMBER	FILING or 371(c) DATE	GRP ART UNIT	FIL FEE REC'D	ATTY.DOCKET.NO	TOT CLAIMS	IND CLAIMS
15/230,435	08/07/2016	3673	730	3520-002-USP	20	3

CONFIRMATION NO. 2775

FILING RECEIPT

46317
TRENNER LAW FIRM, LLC
(Mark D. Trenner)
1153 Bergen Pkwy #i-115
Evergreen, CO 80439

Date Mailed: 08/19/2016

Receipt is acknowledged of this non-provisional patent application. The application will be taken up for examination in due course. Applicant will be notified as to the results of the examination. Any correspondence concerning the application must include the following identification information: the U.S. APPLICATION NUMBER, FILING DATE, NAME OF APPLICANT, and TITLE OF INVENTION. Fees transmitted by check or draft are subject to collection. Please verify the accuracy of the data presented on this receipt. **If an error is noted on this Filing Receipt, please submit a written request for a Filing Receipt Correction. Please provide a copy of this Filing Receipt with the changes noted thereon. If you received a "Notice to File Missing Parts" for this application, please submit any corrections to this Filing Receipt with your reply to the Notice. When the USPTO processes the reply to the Notice, the USPTO will generate another Filing Receipt incorporating the requested corrections**

Inventor(s)
Peter Hall, Steamboat Springs, CO;

Applicant(s)
Twitch, LLC, Steamboat Springs, CO;

Power of Attorney: The patent practitioners associated with Customer Number 46317

Domestic Priority data as claimed by applicant
This appln claims benefit of 62/202,549 08/07/2015

Foreign Applications for which priority is claimed (You may be eligible to benefit from the **Patent Prosecution Highway** program at the USPTO. Please see http://www.uspto.gov for more information.) - None.
Foreign application information must be provided in an Application Data Sheet in order to constitute a claim to foreign priority. See 37 CFR 1.55 and 1.76.

Permission to Access Application via Priority Document Exchange: No

Permission to Access Search Results: No

Applicant may provide or rescind an authorization for access using Form PTO/SB/39 or Form PTO/SB/69 as appropriate.

If Required, Foreign Filing License Granted: 08/17/2016
The country code and number of your priority application, to be used for filing abroad under the Paris Convention, is **US 15/230,435**
Projected Publication Date: 02/09/2017

Non-Publication Request: No

Early Publication Request: No
**** SMALL ENTITY ****
Title

Inflatable Paddle Board

Preliminary Class

005

Statement under 37 CFR 1.55 or 1.78 for AIA (First Inventor to File) Transition Applications: No

PROTECTING YOUR INVENTION OUTSIDE THE UNITED STATES

Since the rights granted by a U.S. patent extend only throughout the territory of the United States and have no effect in a foreign country, an inventor who wishes patent protection in another country must apply for a patent in a specific country or in regional patent offices. Applicants may wish to consider the filing of an international application under the Patent Cooperation Treaty (PCT). An international (PCT) application generally has the same effect as a regular national patent application in each PCT-member country. The PCT process **simplifies** the filing of patent applications on the same invention in member countries, but **does not result** in a grant of "an international patent" and does not eliminate the need of applicants to file additional documents and fees in countries where patent protection is desired.

Almost every country has its own patent law, and a person desiring a patent in a particular country must make an application for patent in that country in accordance with its particular laws. Since the laws of many countries differ in various respects from the patent law of the United States, applicants are advised to seek guidance from specific foreign countries to ensure that patent rights are not lost prematurely.

Applicants also are advised that in the case of inventions made in the United States, the Director of the USPTO must issue a license before applicants can apply for a patent in a foreign country. The filing of a U.S. patent application serves as a request for a foreign filing license. The application's filing receipt contains further information and guidance as to the status of applicant's license for foreign filing.

Applicants may wish to consult the USPTO booklet, "General Information Concerning Patents" (specifically, the section entitled "Treaties and Foreign Patents") for more information on timeframes and deadlines for filing foreign patent applications. The guide is available either by contacting the USPTO Contact Center at 800-786-9199, or it can be viewed on the USPTO website at http://www.uspto.gov/web/offices/pac/doc/general/index.html.

For information on preventing theft of your intellectual property (patents, trademarks and copyrights), you may wish to consult the U.S. Government website, http://www.stopfakes.gov. Part of a Department of Commerce initiative, this website includes self-help "toolkits" giving innovators guidance on how to protect intellectual property in specific countries such as China, Korea and Mexico. For questions regarding patent enforcement issues, applicants may call the U.S. Government hotline at 1-866-999-HALT (1-866-999-4258).

LICENSE FOR FOREIGN FILING UNDER

Title 35, United States Code, Section 184

Title 37, Code of Federal Regulations, 5.11 & 5.15

GRANTED

The applicant has been granted a license under 35 U.S.C. 184, if the phrase "IF REQUIRED, FOREIGN FILING LICENSE GRANTED" followed by a date appears on this form. Such licenses are issued in all applications where the conditions for issuance of a license have been met, regardless of whether or not a license may be required as set forth in 37 CFR 5.15. The scope and limitations of this license are set forth in 37 CFR 5.15(a) unless an earlier license has been issued under 37 CFR 5.15(b). The license is subject to revocation upon written notification. The date indicated is the effective date of the license, unless an earlier license of similar scope has been granted under 37 CFR 5.13 or 5.14.

This license is to be retained by the licensee and may be used at any time on or after the effective date thereof unless it is revoked. This license is automatically transferred to any related applications(s) filed under 37 CFR 1.53(d). This license is not retroactive.

The grant of a license does not in any way lessen the responsibility of a licensee for the security of the subject matter as imposed by any Government contract or the provisions of existing laws relating to espionage and the national security or the export of technical data. Licensees should apprise themselves of current regulations especially with respect to certain countries, of other agencies, particularly the Office of Defense Trade Controls, Department of State (with respect to Arms, Munitions and Implements of War (22 CFR 121-128)); the Bureau of Industry and Security, Department of Commerce (15 CFR parts 730-774); the Office of Foreign AssetsControl, Department of Treasury (31 CFR Parts 500+) and the Department of Energy.

NOT GRANTED

No license under 35 U.S.C. 184 has been granted at this time, if the phrase "IF REQUIRED, FOREIGN FILING LICENSE GRANTED" DOES NOT appear on this form. Applicant may still petition for a license under 37 CFR 5.12, if a license is desired before the expiration of 6 months from the filing date of the application. If 6 months has lapsed from the filing date of this application and the licensee has not received any indication of a secrecy order under 35 U.S.C. 181, the licensee may foreign file the application pursuant to 37 CFR 5.15(b).

SelectUSA

The United States represents the largest, most dynamic marketplace in the world and is an unparalleled location for business investment, innovation, and commercialization of new technologies. The U.S. offers tremendous resources and advantages for those who invest and manufacture goods here. Through SelectUSA, our nation works to promote and facilitate business investment. SelectUSA provides information assistance to the international investor community; serves as an ombudsman for existing and potential investors; advocates on behalf of U.S. cities, states, and regions competing for global investment; and counsels U.S. economic development organizations on investment attraction best practices. To learn more about why the United States is the best country in the world to develop technology, manufacture products, deliver services, and grow your business, visit http://www.SelectUSA.gov or call +1-202-482-6800.

PATENT APPLICATION FEE DETERMINATION RECORD Substitute for Form PTO-875	Application or Docket Number 15/230,435

APPLICATION AS FILED - PART I

FOR	(Column 1) NUMBER FILED	(Column 2) NUMBER EXTRA	SMALL ENTITY RATE($)	SMALL ENTITY FEE($)	OR	OTHER THAN SMALL ENTITY RATE($)	OTHER THAN SMALL ENTITY FEE($)
BASIC FEE (37 CFR 1.16(a), (b), or (c))	N/A	N/A	N/A	70		N/A	
SEARCH FEE (37 CFR 1.16(k), (i), or (m))	N/A	N/A	N/A	300		N/A	
EXAMINATION FEE (37 CFR 1.16(o), (p), or (q))	N/A	N/A	N/A	360		N/A	
TOTAL CLAIMS (37 CFR 1.16(i))	20 minus 20 =	*	x 40 =	0.00	OR		
INDEPENDENT CLAIMS (37 CFR 1.16(h))	3 minus 3 =	*	x 210 =	0.00			
APPLICATION SIZE FEE (37 CFR 1.16(s))	If the specification and drawings exceed 100 sheets of paper, the application size fee due is $310 ($155 for small entity) for each additional 50 sheets or fraction thereof. See 35 U.S.C. 41(a)(1)(G) and 37 CFR 1.16(s).			0.00			
MULTIPLE DEPENDENT CLAIM PRESENT (37 CFR 1.16(j))				0.00			
* If the difference in column 1 is less than zero, enter "0" in column 2.			TOTAL	730		TOTAL	

APPLICATION AS AMENDED - PART II

		(Column 1) CLAIMS REMAINING AFTER AMENDMENT		(Column 2) HIGHEST NUMBER PREVIOUSLY PAID FOR	(Column 3) PRESENT EXTRA	SMALL ENTITY RATE($)	SMALL ENTITY ADDITIONAL FEE($)	OR	OTHER THAN SMALL ENTITY RATE($)	OTHER THAN SMALL ENTITY ADDITIONAL FEE($)
AMENDMENT A	Total (37 CFR 1.16(i))	*	Minus	**	=	x =		OR	x =	
AMENDMENT A	Independent (37 CFR 1.16(h))	*	Minus	***	=	x =		OR	x =	
AMENDMENT A	Application Size Fee (37 CFR 1.16(s))									
AMENDMENT A	FIRST PRESENTATION OF MULTIPLE DEPENDENT CLAIM (37 CFR 1.16(j))							OR		
						TOTAL ADD'L FEE		OR	TOTAL ADD'L FEE	

		(Column 1) CLAIMS REMAINING AFTER AMENDMENT		(Column 2) HIGHEST NUMBER PREVIOUSLY PAID FOR	(Column 3) PRESENT EXTRA	RATE($)	ADDITIONAL FEE($)		RATE($)	ADDITIONAL FEE($)
AMENDMENT B	Total (37 CFR 1.16(i))	*	Minus	**	=	x =		OR	x =	
AMENDMENT B	Independent (37 CFR 1.16(h))	*	Minus	***	=	x =		OR	x =	
AMENDMENT B	Application Size Fee (37 CFR 1.16(s))									
AMENDMENT B	FIRST PRESENTATION OF MULTIPLE DEPENDENT CLAIM (37 CFR 1.16(j))							OR		
						TOTAL ADD'L FEE		OR	TOTAL ADD'L FEE	

* If the entry in column 1 is less than the entry in column 2, write "0" in column 3.
** If the "Highest Number Previously Paid For" IN THIS SPACE is less than 20, enter "20".
*** If the "Highest Number Previously Paid For" IN THIS SPACE is less than 3, enter "3".
The "Highest Number Previously Paid For" (Total or Independent) is the highest found in the appropriate box in column 1.

UNITED STATES PATENT AND TRADEMARK OFFICE

UNITED STATES DEPARTMENT OF COMMERCE
United States Patent and Trademark Office
Address: COMMISSIONER FOR PATENTS
P.O. Box 1450
Alexandria, Virginia 22313-1450
www.uspto.gov

APPLICATION NUMBER	FILING OR 371(C) DATE	FIRST NAMED APPLICANT	ATTY. DOCKET NO./TITLE
15/230,435	08/07/2016	Peter Hall	3520-002-USP

CONFIRMATION NO. 2775

PUBLICATION NOTICE

OC000000089101117

46317
TRENNER LAW FIRM, LLC
(Mark D. Trenner)
1153 Bergen Pkwy #i-115
Evergreen, CO 80439

Title: Inflatable Paddle Board

Publication No.US-2017-0036742-A1
Publication Date:02/09/2017

NOTICE OF PUBLICATION OF APPLICATION

The above-identified application will be electronically published as a patent application publication pursuant to 37 CFR 1.211, et seq. The patent application publication number and publication date are set forth above.

The publication may be accessed through the USPTO's publically available Searchable Databases via the Internet at www.uspto.gov. The direct link to access the publication is currently http://www.uspto.gov/patft/.

The publication process established by the Office does not provide for mailing a copy of the publication to applicant. A copy of the publication may be obtained from the Office upon payment of the appropriate fee set forth in 37 CFR 1.19(a)(1). Orders for copies of patent application publications are handled by the USPTO's Office of Public Records. The Office of Public Records can be reached by telephone at (571) 272-3150 or (800) 972-6382, by facsimile at (571) 273-3250, by mail addressed to the United States Patent and Trademark Office, Office of Public Records, Alexandria, VA 22313-1450 or via the Internet.

In addition, information on the status of the application, including the mailing date of Office actions and the dates of receipt of correspondence filed in the Office, may also be accessed via the Internet through the Patent Electronic Business Center at www.uspto.gov using the public side of the Patent Application Information and Retrieval (PAIR) system. The direct link to access this status information is currently http://pair.uspto.gov/. Prior to publication, such status information is confidential and may only be obtained by applicant using the private side of PAIR.

Further assistance in electronically accessing the publication, or about PAIR, is available by calling the Patent Electronic Business Center at 1-866-217-9197.

Office of Data Managment, Application Assistance Unit (571) 272-4000, or (571) 272-4200, or 1-888-786-0101

UNITED STATES PATENT AND TRADEMARK OFFICE

UNITED STATES DEPARTMENT OF COMMERCE
United States Patent and Trademark Office
Address: COMMISSIONER FOR PATENTS
P.O. Box 1450
Alexandria, Virginia 22313-1450
www.uspto.gov

APPLICATION NO.	FILING DATE	FIRST NAMED INVENTOR	ATTORNEY DOCKET NO.	CONFIRMATION NO.
15/230,435	08/07/2016	Peter Hall	3520-002-USP	2775

46317 7590 05/22/2017
TRENNER LAW FIRM, LLC
(Mark D. Trenner)
1153 Bergen Pkwy #i-115
Evergreen, CO 80439

EXAMINER
OLSON, LARS A

ART UNIT	PAPER NUMBER
3617	

NOTIFICATION DATE	DELIVERY MODE
05/22/2017	ELECTRONIC

Please find below and/or attached an Office communication concerning this application or proceeding.

The time period for reply, if any, is set in the attached communication.

Notice of the Office communication was sent electronically on above-indicated "Notification Date" to the following e-mail address(es):

mark@us-patentattorney.com
records@us-patentattorney.com
docket@us-patentattorney.com

Office Action Summary	Application No. 15/230,435	Applicant(s) HALL, PETER	
	Examiner Lars A. Olson	Art Unit 3617	AIA (First Inventor to File) Status Yes

-- The MAILING DATE of this communication appears on the cover sheet with the correspondence address --

Period for Reply

A SHORTENED STATUTORY PERIOD FOR REPLY IS SET TO EXPIRE 3 MONTHS FROM THE MAILING DATE OF THIS COMMUNICATION.

- Extensions of time may be available under the provisions of 37 CFR 1.136(a). In no event, however, may a reply be timely filed after SIX (6) MONTHS from the mailing date of this communication.
- If NO period for reply is specified above, the maximum statutory period will apply and will expire SIX (6) MONTHS from the mailing date of this communication.
- Failure to reply within the set or extended period for reply will, by statute, cause the application to become ABANDONED (35 U.S.C. § 133). Any reply received by the Office later than three months after the mailing date of this communication, even if timely filed, may reduce any earned patent term adjustment. See 37 CFR 1.704(b).

Status

1)☐ Responsive to communication(s) filed on _____.

☐ A declaration(s)/affidavit(s) under **37 CFR 1.130(b)** was/were filed on _____.

2a)☐ This action is **FINAL**. 2b)☒ This action is non-final.

3)☐ An election was made by the applicant in response to a restriction requirement set forth during the interview on _____; the restriction requirement and election have been incorporated into this action.

4)☐ Since this application is in condition for allowance except for formal matters, prosecution as to the merits is closed in accordance with the practice under *Ex parte Quayle*, 1935 C.D. 11, 453 O.G. 213.

Disposition of Claims*

5)☒ Claim(s) 1-20 is/are pending in the application.

5a) Of the above claim(s) _____ is/are withdrawn from consideration.

6)☒ Claim(s) 20 is/are allowed.

7)☒ Claim(s) 1-3,8,10-13,16 and 19 is/are rejected.

8)☒ Claim(s) 4-7,9,14,15,17 and 18 is/are objected to.

9)☐ Claim(s) _____ are subject to restriction and/or election requirement.

* If any claims have been determined allowable, you may be eligible to benefit from the **Patent Prosecution Highway** program at a participating intellectual property office for the corresponding application. For more information, please see http://www.uspto.gov/patents/init_events/pph/index.jsp or send an inquiry to PPHfeedback@uspto.gov.

Application Papers

10)☐ The specification is objected to by the Examiner.

11)☒ The drawing(s) filed on 8/7/2016 is/are: a)☒ accepted or b)☐ objected to by the Examiner.

Applicant may not request that any objection to the drawing(s) be held in abeyance. See 37 CFR 1.85(a).

Replacement drawing sheet(s) including the correction is required if the drawing(s) is objected to. See 37 CFR 1.121(d).

Priority under 35 U.S.C. § 119

12)☐ Acknowledgment is made of a claim for foreign priority under 35 U.S.C. § 119(a)-(d) or (f).

Certified copies:

a)☐ All b)☐ Some** c)☐ None of the:

1.☐ Certified copies of the priority documents have been received.

2.☐ Certified copies of the priority documents have been received in Application No. _____.

3.☐ Copies of the certified copies of the priority documents have been received in this National Stage application from the International Bureau (PCT Rule 17.2(a)).

** See the attached detailed Office action for a list of the certified copies not received.

Attachment(s)

1) ☒ Notice of References Cited (PTO-892)

2) ☐ Information Disclosure Statement(s) (PTO/SB/08a and/or PTO/SB/08b) Paper No(s)/Mail Date _____.

3) ☐ Interview Summary (PTO-413) Paper No(s)/Mail Date. _____ .

4) ☐ Other: _____.

DETAILED ACTION

1. The present application, filed on or after March 16, 2013, is being examined under the first inventor to file provisions of the AIA.

Claim Rejections - 35 USC § 103

2. The following is a quotation of 35 U.S.C. 103 which forms the basis for all obviousness rejections set forth in this Office action:

> A patent for a claimed invention may not be obtained, notwithstanding that the claimed invention is not identically disclosed as set forth in section 102, if the differences between the claimed invention and the prior art are such that the claimed invention as a whole would have been obvious before the effective filing date of the claimed invention to a person having ordinary skill in the art to which the claimed invention pertains. Patentability shall not be negated by the manner in which the invention was made.

3. Claims 1-3, 8, 10-13, 16 and 19 are rejected under 35 U.S.C. 103 as being unpatentable over Dingel (US 9,114,862) in view of Klimenko (US 6,394,018).

Dingel discloses an inflatable paddle board, as shown in Figures 1-4, that includes at least one inflatable chamber, defined as Part #30, that is further comprised of drop-stitch material, as shown in Figure 4.

Dingel, as set forth above, discloses all of the features claimed except for the use of a second inflatable chamber that is connected to a first inflatable chamber to form a curve-shaped front hull.

Klimenko discloses an inflatable watercraft, as shown in Figure 1, that is comprised of a first inflatable chamber, defined as Part #14, with a second inflatable chamber, defined as Part #26, which is connectable to said first inflatable chamber in order to form a curve-shaped front hull, where said second inflatable chamber at least

partially overhangs a front portion of said first inflatable chamber. Said second inflatable chamber is further comprised of sidewalls that form a rail around at least a portion of said front portion of said first inflatable chamber.

Therefore, it would have been obvious before the effective filing date of the claimed invention to one of ordinary skill in the art, to utilize a second inflatable chamber that is connectable to a first inflatable chamber in order to form a curve-shaped front hull on a watercraft, as taught by Klimenko, in combination with the inflatable paddle board as disclosed by Dingel for the purpose of providing an inflatable paddle board with means to facilitate operation of said paddle board in wavy conditions on a body of water.

Allowable Subject Matter

4. Claim 20 is allowed.

5. Claims 4-7, 9, 14, 15, 17 and 18 are objected to as being dependent upon a rejected base claim, but would be allowable if rewritten in independent form including all of the limitations of the base claim and any intervening claims.

Conclusion

6. The prior art made of record and not relied upon is considered pertinent to applicant's disclosure. Haller et al. (US 2014/0080369 A1 and US 2013/0137319 A1) discloses an inflatable stand-up paddle board.

7. Any inquiry concerning this communication from the examiner should be directed to Exr. Lars Olson whose telephone number is (571) 272-6685.

lo

May 16, 2017

/Lars A. Olson/

Primary Examiner, Art Unit 3617

Notice of References Cited	Application/Control No. 15/230,435	Applicant(s)/Patent Under Reexamination HALL, PETER	
	Examiner Lars A. Olson	Art Unit 3617	Page 1 of 1

U.S. PATENT DOCUMENTS

*		Document Number Country Code-Number-Kind Code	Date MM-YYYY	Name	CPC Classification	US Classification
*	A	US-2014/0080369 A1	03-2014	Haller; Clayton F.	B63B35/79	441/66
*	B	US-2013/0137319 A1	05-2013	Haller; Clay	B63B35/7913	441/66
*	C	US-9,114,862 B2	08-2015	Dingel; Bryan	B63B35/7913	1/1
*	D	US-6,394,018 B1	05-2002	Klimenko; Konstantin	B63B7/085	441/66
	E	US-				
	F	US-				
	G	US-				
	H	US-				
	I	US-				
	J	US-				
	K	US-				
	L	US-				
	M	US-				

FOREIGN PATENT DOCUMENTS

*		Document Number Country Code-Number-Kind Code	Date MM-YYYY	Country	Name	CPC Classification
	N					
	O					
	P					
	Q					
	R					
	S					
	T					

NON-PATENT DOCUMENTS

*		Include as applicable: Author, Title Date, Publisher, Edition or Volume, Pertinent Pages)
	U	
	V	
	W	
	X	

*A copy of this reference is not being furnished with this Office action. (See MPEP § 707.05(a).)
Dates in MM-YYYY format are publication dates. Classifications may be US or foreign.

UNITED STATES PATENT AND TRADEMARK OFFICE

UNITED STATES DEPARTMENT OF COMMERCE
United States Patent and Trademark Office
Address: COMMISSIONER FOR PATENTS
P.O. Box 1450
Alexandria, Virginia 22313-1450
www.uspto.gov

BIB DATA SHEET

CONFIRMATION NO. 2775

SERIAL NUMBER	FILING or 371(c) DATE	CLASS	GROUP ART UNIT	ATTORNEY DOCKET NO.
15/230,435	08/07/2016 RULE	441	3617	3520-002-USP

APPLICANTS
Twitch, LLC, Steamboat Springs, CO;

INVENTORS
Peter Hall, Steamboat Springs, CO;

**** CONTINUING DATA ***************************
This appln claims benefit of 62/202,549 08/07/2015

**** FOREIGN APPLICATIONS ***************************

**** IF REQUIRED, FOREIGN FILING LICENSE GRANTED **** ** SMALL ENTITY **
08/17/2016

Foreign Priority claimed	☐ Yes ☑ No		STATE OR COUNTRY	SHEETS DRAWINGS	TOTAL CLAIMS	INDEPENDENT CLAIMS
35 USC 119(a-d) conditions met	☐ Yes ☑ No	☐ Met after Allowance				
Verified and Acknowledged	/LARS A OLSON/ Examiner's Signature	Initials	CO	8	20	3

ADDRESS

TRENNER LAW FIRM, LLC
(Mark D. Trenner)
1153 Bergen Pkwy #i-115
Evergreen, CO 80439
UNITED STATES

TITLE

Inflatable Paddle Board

FILING FEE RECEIVED		
730	FEES: Authority has been given in Paper No._____ to charge/credit DEPOSIT ACCOUNT No._____ for following:	☐ All Fees ☐ 1.16 Fees (Filing) ☐ 1.17 Fees (Processing Ext. of time) ☐ 1.18 Fees (Issue) ☐ Other _____ ☐ Credit

Index of Claims	Application/Control No.	Applicant(s)/Patent Under Reexamination
	15230435	HALL, PETER
	Examiner	**Art Unit**
	LARS A OLSON	3617

✓	Rejected	-	Cancelled	N	Non-Elected	A	Appeal
=	Allowed	÷	Restricted	I	Interference	O	Objected

☐ Claims renumbered in the same order as presented by applicant ☐ CPA ☐ T.D. ☐ R.1.47

CLAIM		DATE								
Final	Original	04/13/2017								
	1	✓								
	2	✓								
	3	✓								
	4	O								
	5	O								
	6	O								
	7	O								
	8	✓								
	9	O								
	10	✓								
	11	✓								
	12	✓								
	13	✓								
	14	O								
	15	O								
	16	✓								
	17	O								
	18	O								
	19	✓								
	20	=								

EAST Search History

EAST Search History (Prior Art)

Ref #	Hits	Search Query	DBs	Default Operator	Plurals	Time Stamp
L1	903	(441/74).CCLS.	US-PGPUB; USPAT; EPO; JPO; DERWENT	OR	OFF	2017/04/13 12:18
L2	2094	b63b35/73.cpc.	US-PGPUB; USPAT; USOCR; FPRS; EPO; JPO; DERWENT; IBM_TDB	OR	OFF	2017/04/13 12:25
L3	5	b63b35/73.cpc. and inflatable and paddle adj board	US-PGPUB; USPAT; USOCR; FPRS; EPO; JPO; DERWENT; IBM_TDB	OR	OFF	2017/04/13 12:25
L4	12	b63b35/79.cpc. and inflatable and paddle adj board	US-PGPUB; USPAT; USOCR; FPRS; EPO; JPO; DERWENT; IBM_TDB	OR	OFF	2017/04/13 12:26
L5	25	b63b35/7913.cpc. and inflatable and paddle adj board	US-PGPUB; USPAT; USOCR; FPRS; EPO; JPO; DERWENT; IBM_TDB	OR	OFF	2017/04/13 12:26
L6	8	b63b35/7916.cpc. and inflatable and paddle adj board	US-PGPUB; USPAT; USOCR; FPRS; EPO; JPO; DERWENT; IBM_TDB	OR	OFF	2017/04/13 12:29
L7	1	b63b7/00.cpc. and inflatable and paddle adj board	US-PGPUB; USPAT; USOCR; FPRS; EPO; JPO; DERWENT; IBM_TDB	OR	OFF	2017/04/13 12:30
L8	3	b63b7/08.cpc. and inflatable and paddle adj board	US-PGPUB; USPAT; USOCR; FPRS; EPO; JPO; DERWENT; IBM_TDB	OR	OFF	2017/04/13 12:32
L9	6	b63b7/085.cpc. and inflatable and paddle adj board	US-PGPUB; USPAT; USOCR; FPRS; EPO; JPO; DERWENT; IBM_TDB	OR	OFF	2017/04/13 12:33
S1	142	(441/66).CCLS.	US-PGPUB; USPAT; EPO; JPO; DERWENT	OR	OFF	2017/04/13 09:47
S2	576	(441/65).CCLS.	US-PGPUB; USPAT; EPO; JPO; DERWENT	OR	OFF	2017/04/13 09:58

4/13/2017 12:34:35 PM
C:\Users\lolson\Documents\EAST\Workspaces\1.wsp

Search Notes	Application/Control No.	Applicant(s)/Patent Under Reexamination
	15230435	HALL, PETER
	Examiner	**Art Unit**
	LARS A OLSON	3617

CPC- SEARCHED

Symbol	Date	Examiner
B63B 35/73	4/13/2017	LO
B63B 35/79		
B63B 35/7913		
B63B 35/7916		
B63B 7/00		
B63B 7/08		
B63B 7/085		

CPC COMBINATION SETS - SEARCHED

Symbol	Date	Examiner

US CLASSIFICATION SEARCHED

Class	Subclass	Date	Examiner
441	65	4/13/2017	LO
441	66		
441	74		

SEARCH NOTES

Search Notes	Date	Examiner
See attached search history	4/13/2017	LO

INTERFERENCE SEARCH

US Class/ CPC Symbol	US Subclass / CPC Group	Date	Examiner

IN THE UNITED STATES PATENT AND TRADEMARK OFFICE

Application Serial No. 15/230,435
Filing Date .....August 7, 2016
First Named Inventor..... Peter Hall
Group Art Unit.....3617
Examiner ..... Olson, Lars A.
Confirmation No. 2775
Attorney's Docket No. 3520-002-USP
Title: Inflatable Paddle Board

AMENDMENT AND RESPONSE

To: Commissioner for Patents
P.O. Box 1450
Alexandria, VA 22313-1450

Sir:

Applicant submits the following amendment and response to the Office Action issued May 22, 2017 ("Office Action").

Authorization to Communicate via Internet Communications

Applicant wishes to communicate with the Examiner via Internet communications, e.g., email or video conferencing tools. Recognizing that Internet communications are not secure, Applicant hereby authorize the USPTO to communicate with the undersigned attorney in accordance with **37 CFR 1.33** and **37 CFR 1.34** concerning any subject matter of this application by video conferencing, instant messaging, or electronic mail. I understand that a copy of these communications will be made of record in the application file. **MPEP 502.03**

Please send email communications to: mark@us-patentattorney.com

Listing of the Claims

1. (currently amended) An inflatable paddle board, comprising:

a first inflatable chamber forming a stand-up board; and

a second inflatable chamber connected to the first inflatable chamber to form a curve-shaped front hull;

wherein the first inflatable chamber at least partially overhangs the second inflatable chamber, and the first and second inflatable chambers are interconnected with only one fill valve.

2. (original) The inflatable paddle board of claim 1, wherein the second inflatable chamber at least partially overhangs the first inflatable chamber.

3. (original) The inflatable paddle board of claim 2, wherein the second inflatable chamber overhangs a front portion of the first inflatable chamber.

4. (canceled)

5. (currently amended) The inflatable paddle board of claim [[4]] 1, wherein the first inflatable chamber overhangs a front portion of the second inflatable chamber.

6. (currently amended) The inflatable paddle board of claim [[4]] 1, wherein the first inflatable chamber overhangs a rear portion of the second inflatable chamber.

7. (currently amended) The inflatable paddle board of claim [[4]] 1, wherein the first inflatable chamber overhangs both a front portion and a rear portion of the second inflatable chamber.

8. (original) The inflatable paddle board of claim 1, wherein the second inflatable chamber overhangs the first inflatable chamber for at least 5% of the length of the first inflatable chamber.

9. (currently amended) The inflatable paddle board of claim 1, ~~further~~ wherein the second inflatable chamber under-hangs the first inflatable chamber for at least 5% of the length of the first inflatable chamber.

10. (original) The inflatable paddle board of claim 1, wherein the first inflatable chamber is wider than the second inflatable chamber.

11. (original) The inflatable paddle board of claim 1, wherein the second inflatable chamber has sidewalls to form a rail around at least a portion of the first inflatable chamber.

12. (original) The inflatable paddle board of claim 11, wherein the rail slopes inward towards a center of the first inflatable chamber.

13. (original) The inflatable paddle board of claim 1, wherein at least one of the first inflatable chamber and the second inflatable chamber are drop-stitch chambers.

14. (original) The inflatable paddle board of claim 1, further comprising a tent covering between the first inflatable chamber and the second inflatable chamber.

15. (original) The inflatable paddle board of claim 14, wherein the tent forms a separate inflatable air chamber.

16. (currently amended) An inflatable paddle board, comprising:

a lower inflatable chamber forming a stand-up board; ~~and~~

an upper inflatable chamber connected to the lower inflatable chamber, the upper inflatable chamber forming a rail around at least a portion of the lower inflatable chamber, and the combination of the lower and upper inflatable chambers forming a curve-shaped front hull; and

a tent covering between the lower inflatable chamber and the upper inflatable chamber.

17. (canceled)

18. (original) The inflatable paddle board of claim 17, wherein the tent forms a separate inflatable air chamber.

19. (original) The inflatable paddle board of claim 16, wherein the rail is formed around a front and front-side portion of the lower inflatable chamber.

20. (original) A method of constructing an inflatable paddle board, comprising:

forming a stand-up board area from a lower inflatable chamber; and

connecting an upper inflatable chamber to the lower inflatable chamber to form a rail around at least a portion of the lower inflatable chamber;

providing a tent covering between the first inflatable chamber and the second inflatable chamber to form a curve-shaped front hull.

21. (new) An inflatable paddle board, comprising:

a first inflatable chamber forming a stand-up board; and

a second inflatable chamber connected to the first inflatable chamber to form a curve-shaped front hull;

wherein the second inflatable chamber under-hangs the first inflatable chamber for at least 5% of the length of the first inflatable chamber

22. (new) An inflatable paddle board, comprising:

a first inflatable chamber forming a stand-up board;

a second inflatable chamber connected to the first inflatable chamber to form a curve-shaped front hull; and

a tent covering between the first inflatable chamber and the second inflatable chamber

Remarks

This communication is considered fully responsive to the Office Action. Claims 1-20 were examined. Claims 1-3, 8, 10-13, 16, and 19 stand rejected. Claims 4-7, 9, 14, 15, 17, and 18 are objected to but otherwise indicated as being allowable. Claim 20 is allowed. Claims 1, 5-7, 9, and 16 are amended. Claims 4 and 17 are canceled. New claims 21 and 22 have been added. Applicant respectfully requests reexamination and reconsideration of the pending claims.

Request for Telephone Interview – Compact Prosecution

Applicant believes that the currently pending claims fairly distinguish over the cited references. In the interest of compact prosecution, however, Applicant respectfully requests that the Examiner or the Examiner's SPE telephone the below-listed attorney to discuss any further amendments which may be necessary in order to put this case in condition for allowance, so that any such amendments can be entered via Examiner Amendment.

Allowable Subject Matter

Applicant appreciates the examiner indicating allowable subject matter in claims 4-7, 9, 14, 15, 17, and 18.

Applicant amended claim 1 based on the allowable subject matter in claim 4. Accordingly, claim 4 is canceled without prejudice to the subject matter contained therein.

Applicant has also amended claim 16 based on the allowable subject matter in claim 17. Accordingly, claim 17 is canceled without prejudice to the subject matter contained therein.

It is noted that Applicant makes no admission by amending these claims that the examiner's rejections are supported by the cited references. Applicant reserves the right to present these claims again in one or more continuation and/or continuation-in-part applications.

New claims 21 and 22 are presented for the examiner's consideration. New claim 21 is believed to be allowable based on the allowable subject matter of claim 9. New claim 22 is believed to be allowable based on the allowable subject matter of claim 14.

Reexamination and reconsideration of the currently pending claims are respectfully requested.

Claim Rejection - 35 U.S.C. 103

The Office Action rejected claims 1-3, 8, 10-13, 16, and 19 under 35 U.S.C. 103 as being unpatentable over U.S. Patent No. 9,114,862 ("Dingel") in view of U.S. Patent No. 6,394,018 ("Klimenko"). Applicant respectfully traverses this rejection.

Applicant believes that the rejection is moot in view of the current amendments discussed above. Applicant respectfully requests withdrawal of the Section 103 rejection.

Conclusion

The Applicant respectfully requests that a timely Notice of Allowance be issued in this matter.

Respectfully Submitted,

/Mark D. Trenner/

Dated: August 22, 2017 By: _____

Mark D. Trenner
Reg. No. 43,961
(720) 221-3708

PTO/SB/08a (01-10)
Approved for use through 07/31/2012. OMB 0651-0031
U.S. Patent and Trademark Office; U.S. DEPARTMENT OF COMMERCE
Under the Paperwork Reduction Act of 1995, no persons are required to respond to a collection of information unless it contains a valid OMB control number.

INFORMATION DISCLOSURE STATEMENT BY APPLICANT (Not for submission under 37 CFR 1.99)		
	Application Number	15230435
	Filing Date	2016-08-07
	First Named Inventor	Peter Hall
	Art Unit	3617
	Examiner Name	Olson, Lars A.
	Attorney Docket Number	3520-002-USP

U.S.PATENTS

Examiner Initial*	Cite No	Patent Number	Kind Code[1]	Issue Date	Name of Patentee or Applicant of cited Document	Pages,Columns,Lines where Relevant Passages or Relevant Figures Appear
	1	7861662		2011-01-04	Rista	

If you wish to add additional U.S. Patent citation information please click the Add button.

U.S.PATENT APPLICATION PUBLICATIONS

Examiner Initial*	Cite No	Publication Number	Kind Code[1]	Publication Date	Name of Patentee or Applicant of cited Document	Pages,Columns,Lines where Relevant Passages or Relevant Figures Appear
	1					

If you wish to add additional U.S. Published Application citation information please click the Add button.

FOREIGN PATENT DOCUMENTS

Examiner Initial*	Cite No	Foreign Document Number[3]	Country Code[2] ¡	Kind Code[4]	Publication Date	Name of Patentee or Applicant of cited Document	Pages,Columns,Lines where Relevant Passages or Relevant Figures Appear	T[5]
	1							☐

If you wish to add additional Foreign Patent Document citation information please click the Add button

NON-PATENT LITERATURE DOCUMENTS

Examiner Initials*	Cite No	Include name of the author (in CAPITAL LETTERS), title of the article (when appropriate), title of the item (book, magazine, journal, serial, symposium, catalog, etc), date, pages(s), volume-issue number(s), publisher, city and/or country where published.	T[5]

INFORMATION DISCLOSURE STATEMENT BY APPLICANT (Not for submission under 37 CFR 1.99)		
	Application Number	15230435
	Filing Date	2016-08-07
	First Named Inventor	Peter Hall
	Art Unit	3617
	Examiner Name	Olson, Lars A.
	Attorney Docket Number	3520-002-USP

	1	Internet page from http://www.boatownersworld.com/sea-eagle-473rl-razorlite-kayak.html. NPL image captured by web.archive.org 5 times between March 16, 2016 and May 18, 2016; however Applicant is aware of products for sale on this page at least as early as August 4, 2015.	☐
If you wish to add additional non-patent literature document citation information please click the Add button			

EXAMINER SIGNATURE			
Examiner Signature		Date Considered	

*EXAMINER: Initial if reference considered, whether or not citation is in conformance with MPEP 609. Draw line through a citation if not in conformance and not considered. Include copy of this form with next communication to applicant.

[1] See Kind Codes of USPTO Patent Documents at www.USPTO.GOV or MPEP 901.04. [2] Enter office that issued the document, by the two-letter code (WIPO Standard ST.3). [3] For Japanese patent documents, the indication of the year of the reign of the Emperor must precede the serial number of the patent document. [4] Kind of document by the appropriate symbols as indicated on the document under WIPO Standard ST.16 if possible. [5] Applicant is to place a check mark here if English language translation is attached.

INFORMATION DISCLOSURE STATEMENT BY APPLICANT (Not for submission under 37 CFR 1.99)		
	Application Number	15230435
	Filing Date	2016-08-07
	First Named Inventor	Peter Hall
	Art Unit	3617
	Examiner Name	Olson, Lars A.
	Attorney Docket Number	3520-002-USP

CERTIFICATION STATEMENT

Please see 37 CFR 1.97 and 1.98 to make the appropriate selection(s):

☐ That each item of information contained in the information disclosure statement was first cited in any communication from a foreign patent office in a counterpart foreign application not more than three months prior to the filing of the information disclosure statement. See 37 CFR 1.97(e)(1).

OR

☐ That no item of information contained in the information disclosure statement was cited in a communication from a foreign patent office in a counterpart foreign application, and, to the knowledge of the person signing the certification after making reasonable inquiry, no item of information contained in the information disclosure statement was known to any individual designated in 37 CFR 1.56(c) more than three months prior to the filing of the information disclosure statement. See 37 CFR 1.97(e)(2).

☐ See attached certification statement.

☒ The fee set forth in 37 CFR 1.17 (p) has been submitted herewith.

☐ A certification statement is not submitted herewith.

SIGNATURE

A signature of the applicant or representative is required in accordance with CFR 1.33, 10.18. Please see CFR 1.4(d) for the form of the signature.

Signature	/Mark D. Trenner/	Date (YYYY-MM-DD)	2017-08-22
Name/Print	Mark D. Trenner	Registration Number	43961

This collection of information is required by 37 CFR 1.97 and 1.98. The information is required to obtain or retain a benefit by the public which is to file (and by the USPTO to process) an application. Confidentiality is governed by 35 U.S.C. 122 and 37 CFR 1.14. This collection is estimated to take 1 hour to complete, including gathering, preparing and submitting the completed application form to the USPTO. Time will vary depending upon the individual case. Any comments on the amount of time you require to complete this form and/or suggestions for reducing this burden, should be sent to the Chief Information Officer, U.S. Patent and Trademark Office, U.S. Department of Commerce, P.O. Box 1450, Alexandria, VA 22313-1450. DO NOT SEND FEES OR COMPLETED FORMS TO THIS ADDRESS. **SEND TO: Commissioner for Patents, P.O. Box 1450, Alexandria, VA 22313-1450.**

Privacy Act Statement

The Privacy Act of 1974 (P.L. 93-579) requires that you be given certain information in connection with your submission of the attached form related to a patent application or patent. Accordingly, pursuant to the requirements of the Act, please be advised that: (1) the general authority for the collection of this information is 35 U.S.C. 2(b)(2); (2) furnishing of the information solicited is voluntary; and (3) the principal purpose for which the information is used by the U.S. Patent and Trademark Office is to process and/or examine your submission related to a patent application or patent. If you do not furnish the requested information, the U.S. Patent and Trademark Office may not be able to process and/or examine your submission, which may result in termination of proceedings or abandonment of the application or expiration of the patent.

The information provided by you in this form will be subject to the following routine uses:

1. The information on this form will be treated confidentially to the extent allowed under the Freedom of Information Act (5 U.S.C. 552) and the Privacy Act (5 U.S.C. 552a). Records from this system of records may be disclosed to the Department of Justice to determine whether the Freedom of Information Act requires disclosure of these record s.

2. A record from this system of records may be disclosed, as a routine use, in the course of presenting evidence to a court, magistrate, or administrative tribunal, including disclosures to opposing counsel in the course of settlement negotiations.

3. A record in this system of records may be disclosed, as a routine use, to a Member of Congress submitting a request involving an individual, to whom the record pertains, when the individual has requested assistance from the Member with respect to the subject matter of the record.

4. A record in this system of records may be disclosed, as a routine use, to a contractor of the Agency having need for the information in order to perform a contract. Recipients of information shall be required to comply with the requirements of the Privacy Act of 1974, as amended, pursuant to 5 U.S.C. 552a(m).

5. A record related to an International Application filed under the Patent Cooperation Treaty in this system of records may be disclosed, as a routine use, to the International Bureau of the World Intellectual Property Organization, pursuant to the Patent Cooperation Treaty.

6. A record in this system of records may be disclosed, as a routine use, to another federal agency for purposes of National Security review (35 U.S.C. 181) and for review pursuant to the Atomic Energy Act (42 U.S.C. 218(c)).

7. A record from this system of records may be disclosed, as a routine use, to the Administrator, General Services, or his/her designee, during an inspection of records conducted by GSA as part of that agency's responsibility to recommend improvements in records management practices and programs, under authority of 44 U.S.C. 2904 and 2906. Such disclosure shall be made in accordance with the GSA regulations governing inspection of records for this purpose, and any other relevant (i.e., GSA or Commerce) directive. Such disclosure shall not be used to make determinations about individuals.

8. A record from this system of records may be disclosed, as a routine use, to the public after either publication of the application pursuant to 35 U.S.C. 122(b) or issuance of a patent pursuant to 35 U.S.C. 151. Further, a record may be disclosed, subject to the limitations of 37 CFR 1.14, as a routine use, to the public if the record was filed in an application which became abandoned or in which the proceedings were terminated and which application is referenced by either a published application, an application open to public inspections or an issued patent.

9. A record from this system of records may be disclosed, as a routine use, to a Federal, State, or local law enforcement agency, if the USPTO becomes aware of a violation or potential violation of law or regulation.

Electronic Patent Application Fee Transmittal

Application Number:	15230435
Filing Date:	07-Aug-2016
Title of Invention:	Inflatable Paddle Board
First Named Inventor/Applicant Name:	Peter Hall
Filer:	Mark D Trenner/Lisa Ziehr
Attorney Docket Number:	3520-002-USP

Filed as Small Entity

Filing Fees for Utility under 35 USC 111(a)

Description	Fee Code	Quantity	Amount	Sub-Total in USD($)
Basic Filing:				
Pages:				
Claims:				
INDEPENDENT CLAIMS IN EXCESS OF 3	2201	2	210	420
Miscellaneous-Filing:				
Petition:				
Patent-Appeals-and-Interference:				
Post-Allowance-and-Post-Issuance:				

Description	Fee Code	Quantity	Amount	Sub-Total in USD($)
Extension-of-Time:				
Miscellaneous:				
SUBMISSION- INFORMATION DISCLOSURE STMT	2806	1	90	90
		Total in USD ($)		**510**

Electronic Acknowledgement Receipt	
EFS ID:	30149502
Application Number:	15230435
International Application Number:	
Confirmation Number:	2775
Title of Invention:	Inflatable Paddle Board
First Named Inventor/Applicant Name:	Peter Hall
Customer Number:	46317
Filer:	Mark D Trenner/Lisa Ziehr
Filer Authorized By:	Mark D Trenner
Attorney Docket Number:	3520-002-USP
Receipt Date:	22-AUG-2017
Filing Date:	07-AUG-2016
Time Stamp:	16:43:30
Application Type:	Utility under 35 USC 111(a)

Payment information:

Submitted with Payment	yes
Payment Type	CARD
Payment was successfully received in RAM	$510
RAM confirmation Number	082317INTEFSW16443800
Deposit Account	
Authorized User	
The Director of the USPTO is hereby authorized to charge indicated fees and credit any overpayment as follows:	

File Listing:

Document Number	Document Description	File Name	File Size(Bytes)/ Message Digest	Multi Part /.zip	Pages (if appl.)
1	Amendment/Req. Reconsideration-After Non-Final Reject	3520-002-USP-Response-EFS.pdf	127805 97a65e8507b5bef5158eec227b736b1f2bd0b049	no	8
Warnings:					
Information:					
2	Non Patent Literature	NPL-SeaEagle.pdf	943832 d1357d5d1ab933f1c76af37ac0ce92758a89256d	no	12
Warnings:					
Information:					
3	Information Disclosure Statement (IDS) Form (SB08)	3520-002-USP-IDS-EFS.pdf	68222 15cb2f1f3ea2921cca54f0737149c5076a3e67be	no	4
Warnings:					
Information:					
This is not an USPTO supplied IDS fillable form					
4	Fee Worksheet (SB06)	fee-info.pdf	32090 a56d429b4b7dcee4f0e92e3335da6e7335b9ee9a	no	2
Warnings:					
Information:					
		Total Files Size (in bytes):	1171949		

This Acknowledgement Receipt evidences receipt on the noted date by the USPTO of the indicated documents, characterized by the applicant, and including page counts, where applicable. It serves as evidence of receipt similar to a Post Card, as described in MPEP 503.

New Applications Under 35 U.S.C. 111
If a new application is being filed and the application includes the necessary components for a filing date (see 37 CFR 1.53(b)-(d) and MPEP 506), a Filing Receipt (37 CFR 1.54) will be issued in due course and the date shown on this Acknowledgement Receipt will establish the filing date of the application.
National Stage of an International Application under 35 U.S.C. 371
If a timely submission to enter the national stage of an international application is compliant with the conditions of 35 U.S.C. 371 and other applicable requirements a Form PCT/DO/EO/903 indicating acceptance of the application as a national stage submission under 35 U.S.C. 371 will be issued in addition to the Filing Receipt, in due course.
New International Application Filed with the USPTO as a Receiving Office
If a new international application is being filed and the international application includes the necessary components for an international filing date (see PCT Article 11 and MPEP 1810), a Notification of the International Application Number and of the International Filing Date (Form PCT/RO/105) will be issued in due course, subject to prescriptions concerning national security, and the date shown on this Acknowledgement Receipt will establish the international filing date of the application.

PTO/SB/06 (09-11)
Approved for use through 1/31/2014. OMB 0651-0032
U.S. Patent and Trademark Office; U.S. DEPARTMENT OF COMMERCE
Under the Paperwork Reduction Act of 1995, no persons are required to respond to a collection of information unless it displays a valid OMB control number.

PATENT APPLICATION FEE DETERMINATION RECORD Substitute for Form PTO-875	Application or Docket Number 15/230,435	Filing Date 08/07/2016	☐ To be Mailed

ENTITY: ☐ LARGE ☒ SMALL ☐ MICRO

APPLICATION AS FILED – PART I

FOR	(Column 1) NUMBER FILED	(Column 2) NUMBER EXTRA	RATE ($)	FEE ($)
☐ BASIC FEE (37 CFR 1.16(a), (b), or (c))	N/A	N/A	N/A	
☐ SEARCH FEE (37 CFR 1.16(k), (i), or (m))	N/A	N/A	N/A	
☐ EXAMINATION FEE (37 CFR 1.16(o), (p), or (q))	N/A	N/A	N/A	
TOTAL CLAIMS (37 CFR 1.16(i))	minus 20 =	*	X $ =	
INDEPENDENT CLAIMS (37 CFR 1.16(h))	minus 3 =	*	X $ =	
☐ APPLICATION SIZE FEE (37 CFR 1.16(s))	If the specification and drawings exceed 100 sheets of paper, the application size fee due is $310 ($155 for small entity) for each additional 50 sheets or fraction thereof. See 35 U.S.C. 41(a)(1)(G) and 37 CFR 1.16(s).			
☐ MULTIPLE DEPENDENT CLAIM PRESENT (37 CFR 1.16(j))				
* If the difference in column 1 is less than zero, enter "0" in column 2.			TOTAL	

APPLICATION AS AMENDED – PART II

AMENDMENT	08/22/2017	(Column 1) CLAIMS REMAINING AFTER AMENDMENT		(Column 2) HIGHEST NUMBER PREVIOUSLY PAID FOR	(Column 3) PRESENT EXTRA	RATE ($)	ADDITIONAL FEE ($)
	Total (37 CFR 1.16(i))	* 14	Minus	** 20	= 0	X $40 =	0
	Independent (37 CFR 1.16(h))	* 1	Minus	***3	= 0	X $210 =	0
	☐ Application Size Fee (37 CFR 1.16(s))						
	☐ FIRST PRESENTATION OF MULTIPLE DEPENDENT CLAIM (37 CFR 1.16(j))						
						TOTAL ADD'L FEE	**0**

AMENDMENT		(Column 1) CLAIMS REMAINING AFTER AMENDMENT		(Column 2) HIGHEST NUMBER PREVIOUSLY PAID FOR	(Column 3) PRESENT EXTRA	RATE ($)	ADDITIONAL FEE ($)
	Total (37 CFR 1.16(i))	*	Minus	**	=	X $ =	
	Independent (37 CFR 1.16(h))	*	Minus	***	=	X $ =	
	☐ Application Size Fee (37 CFR 1.16(s))						
	☐ FIRST PRESENTATION OF MULTIPLE DEPENDENT CLAIM (37 CFR 1.16(j))						
						TOTAL ADD'L FEE	

* If the entry in column 1 is less than the entry in column 2, write "0" in column 3.
** If the "Highest Number Previously Paid For" IN THIS SPACE is less than 20, enter "20".
*** If the "Highest Number Previously Paid For" IN THIS SPACE is less than 3, enter "3".
The "Highest Number Previously Paid For" (Total or Independent) is the highest number found in the appropriate box in column 1.

LIE
NICOLE NICHOLSON

This collection of information is required by 37 CFR 1.16. The information is required to obtain or retain a benefit by the public which is to file (and by the USPTO to process) an application. Confidentiality is governed by 35 U.S.C. 122 and 37 CFR 1.14. This collection is estimated to take 12 minutes to complete, including gathering, preparing, and submitting the completed application form to the USPTO. Time will vary depending upon the individual case. Any comments on the amount of time you require to complete this form and/or suggestions for reducing this burden, should be sent to the Chief Information Officer, U.S. Patent and Trademark Office, U.S. Department of Commerce, P.O. Box 1450, Alexandria, VA 22313-1450. DO NOT SEND FEES OR COMPLETED FORMS TO THIS ADDRESS. **SEND TO: Commissioner for Patents, P.O. Box 1450, Alexandria, VA 22313-1450.**
If you need assistance in completing the form, call 1-800-PTO-9199 and select option 2.

UNITED STATES PATENT AND TRADEMARK OFFICE

UNITED STATES DEPARTMENT OF COMMERCE
United States Patent and Trademark Office
Address: COMMISSIONER FOR PATENTS
P.O. Box 1450
Alexandria, Virginia 22313-1450
www.uspto.gov

APPLICATION NO.	FILING DATE	FIRST NAMED INVENTOR	ATTORNEY DOCKET NO.	CONFIRMATION NO.
15/230,435	08/07/2016	Peter Hall	3520-002-USP	2775

46317 7590 09/18/2017
TRENNER LAW FIRM, LLC
(Mark D. Trenner)
1153 Bergen Pkwy #i-115
Evergreen, CO 80439

EXAMINER
OLSON, LARS A

ART UNIT	PAPER NUMBER
3617	

NOTIFICATION DATE	DELIVERY MODE
09/18/2017	ELECTRONIC

Please find below and/or attached an Office communication concerning this application or proceeding.

The time period for reply, if any, is set in the attached communication.

Notice of the Office communication was sent electronically on above-indicated "Notification Date" to the following e-mail address(es):

mark@us-patentattorney.com
records@us-patentattorney.com
docket@us-patentattorney.com

Office Action Summary	Application No. 15/230,435	Applicant(s) HALL, PETER	
	Examiner Lars A. Olson	Art Unit 3617	AIA (First Inventor to File) Status Yes

-- The MAILING DATE of this communication appears on the cover sheet with the correspondence address --

Period for Reply

A SHORTENED STATUTORY PERIOD FOR REPLY IS SET TO EXPIRE 3 MONTHS FROM THE MAILING DATE OF THIS COMMUNICATION.

- Extensions of time may be available under the provisions of 37 CFR 1.136(a). In no event, however, may a reply be timely filed after SIX (6) MONTHS from the mailing date of this communication.
- If NO period for reply is specified above, the maximum statutory period will apply and will expire SIX (6) MONTHS from the mailing date of this communication.
- Failure to reply within the set or extended period for reply will, by statute, cause the application to become ABANDONED (35 U.S.C. § 133). Any reply received by the Office later than three months after the mailing date of this communication, even if timely filed, may reduce any earned patent term adjustment. See 37 CFR 1.704(b).

Status

1)☒ Responsive to communication(s) filed on *8/22/2017*.

☐ A declaration(s)/affidavit(s) under **37 CFR 1.130(b)** was/were filed on _____.

2a)☒ This action is **FINAL**. 2b)☐ This action is non-final.

3)☐ An election was made by the applicant in response to a restriction requirement set forth during the interview on _____; the restriction requirement and election have been incorporated into this action.

4)☐ Since this application is in condition for allowance except for formal matters, prosecution as to the merits is closed in accordance with the practice under *Ex parte Quayle*, 1935 C.D. 11, 453 O.G. 213.

Disposition of Claims*

5)☒ Claim(s) *1-3,5-16 and 18-22* is/are pending in the application.

5a) Of the above claim(s) _____ is/are withdrawn from consideration.

6)☒ Claim(s) *1-3,5-16,19 and 20* is/are allowed.

7)☒ Claim(s) *18,21 and 22* is/are rejected.

8)☐ Claim(s) _____ is/are objected to.

9)☐ Claim(s) _____ are subject to restriction and/or election requirement.

* If any claims have been determined allowable, you may be eligible to benefit from the **Patent Prosecution Highway** program at a participating intellectual property office for the corresponding application. For more information, please see http://www.uspto.gov/patents/init_events/pph/index.jsp or send an inquiry to PPHfeedback@uspto.gov.

Application Papers

10)☐ The specification is objected to by the Examiner.

11)☐ The drawing(s) filed on _____ is/are: a)☐ accepted or b)☐ objected to by the Examiner.

Applicant may not request that any objection to the drawing(s) be held in abeyance. See 37 CFR 1.85(a).

Replacement drawing sheet(s) including the correction is required if the drawing(s) is objected to. See 37 CFR 1.121(d).

Priority under 35 U.S.C. § 119

12)☐ Acknowledgment is made of a claim for foreign priority under 35 U.S.C. § 119(a)-(d) or (f).

Certified copies:

a)☐ All b)☐ Some** c)☐ None of the:

1.☐ Certified copies of the priority documents have been received.

2.☐ Certified copies of the priority documents have been received in Application No. _____.

3.☐ Copies of the certified copies of the priority documents have been received in this National Stage application from the International Bureau (PCT Rule 17.2(a)).

** See the attached detailed Office action for a list of the certified copies not received.

Attachment(s)

1) ☐ Notice of References Cited (PTO-892)

2) ☒ Information Disclosure Statement(s) (PTO/SB/08a and/or PTO/SB/08b) Paper No(s)/Mail Date _____.

3) ☐ Interview Summary (PTO-413) Paper No(s)/Mail Date. _____ .

4) ☐ Other: _____.

DETAILED ACTION

1. The present application, filed on or after March 16, 2013, is being examined under the first inventor to file provisions of the AIA.

2. An amendment was received from the applicant on August 22, 2017.

3. Claims 4 and 17 have been cancelled.

4. Claims 21 and 22 have been added.

Claim Rejections - 35 USC § 112

5. The following is a quotation of 35 U.S.C. 112(b):
(b) CONCLUSION.—The specification shall conclude with one or more claims particularly pointing out and distinctly claiming the subject matter which the inventor or a joint inventor regards as the invention.

The following is a quotation of 35 U.S.C. 112 (pre-AIA), second paragraph:
The specification shall conclude with one or more claims particularly pointing out and distinctly claiming the subject matter which the applicant regards as his invention.

6. Claims 18, 21 and 22 are rejected under 35 U.S.C. 112(b) or 35 U.S.C. 112 (pre-AIA), second paragraph, as being indefinite for failing to particularly point out and distinctly claim the subject matter which the inventor or a joint inventor, or for pre-AIA the applicant regards as the invention.

7. Claim 18 depends from claim 17, which has been cancelled. It is unclear from which claim that claim 18 should now depend.

8. Claim 21 does not end with a period "." on line 6, and is thus considered to be incomplete and indefinite.

9. Claim 22 does not end with a period "." on line 6, and is thus considered to be incomplete and indefinite.

Allowable Subject Matter

10. Claims 1-3, 5-16, 19 and 20 are allowed.

Conclusion

11. Applicant's amendment necessitated the new ground(s) of rejection presented in this Office action. Accordingly, **THIS ACTION IS MADE FINAL**. See MPEP § 706.07(a). Applicant is reminded of the extension of time policy as set forth in 37 CFR 1.136(a).

A shortened statutory period for reply to this final action is set to expire THREE MONTHS from the mailing date of this action. In the event a first reply is filed within TWO MONTHS of the mailing date of this final action and the advisory action is not mailed until after the end of the THREE-MONTH shortened statutory period, then the shortened statutory period will expire on the date the advisory action is mailed, and any extension fee pursuant to 37 CFR 1.136(a) will be calculated from the mailing date of the advisory action. In no event, however, will the statutory period for reply expire later than SIX MONTHS from the date of this final action.

12. Any inquiry concerning this communication from the examiner should be directed to Exr. Lars Olson whose telephone number is (571) 272-6685.

lo

September 13, 2017

/Lars A. Olson/

Primary Examiner, Art Unit 3617

Doc code: IDS
Doc description: Information Disclosure Statement (IDS) Filed

PTO/SB/08a (01-10)
Approved for use through 07/31/2012. OMB 0651-0031
U.S. Patent and Trademark Office; U.S. DEPARTMENT OF COMMERCE
Under the Paperwork Reduction Act of 1995, no persons are required to respond to a collection of information unless it contains a valid OMB control number.

INFORMATION DISCLOSURE STATEMENT BY APPLICANT (Not for submission under 37 CFR 1.99)		
	Application Number	15230435
	Filing Date	2016-08-07
	First Named Inventor	Peter Hall
	Art Unit	3617
	Examiner Name	Olson, Lars A.
	Attorney Docket Number	3520-002-USP

U.S.PATENTS

Examiner Initial*	Cite No	Patent Number	Kind Code[1]	Issue Date	Name of Patentee or Applicant of cited Document	Pages,Columns,Lines where Relevant Passages or Relevant Figures Appear
	1	7861662		2011-01-04	Rista	

If you wish to add additional U.S. Patent citation information please click the Add button.

U.S.PATENT APPLICATION PUBLICATIONS

Examiner Initial*	Cite No	Publication Number	Kind Code[1]	Publication Date	Name of Patentee or Applicant of cited Document	Pages,Columns,Lines where Relevant Passages or Relevant Figures Appear
	1					

If you wish to add additional U.S. Published Application citation information please click the Add button.

FOREIGN PATENT DOCUMENTS

Examiner Initial*	Cite No	Foreign Document Number[3]	Country Code[2] i	Kind Code[4]	Publication Date	Name of Patentee or Applicant of cited Document	Pages,Columns,Lines where Relevant Passages or Relevant Figures Appear	T[5]
	1							☐

If you wish to add additional Foreign Patent Document citation information please click the Add button

NON-PATENT LITERATURE DOCUMENTS

Examiner Initials*	Cite No	Include name of the author (in CAPITAL LETTERS), title of the article (when appropriate), title of the item (book, magazine, journal, serial, symposium, catalog, etc), date, pages(s), volume-issue number(s), publisher, city and/or country where published.	T[5]

ALL REFERENCES CONSIDERED EXCEPT WHERE LINED THROUGH. /L.A.O/

INFORMATION DISCLOSURE STATEMENT BY APPLICANT (Not for submission under 37 CFR 1.99)		
	Application Number	15230435
	Filing Date	2016-08-07
	First Named Inventor	Peter Hall
	Art Unit	3617
	Examiner Name	Olson, Lars A.
	Attorney Docket Number	3520-002-USP

	1	Internet page from http://www.boatownersworld.com/sea-eagle-473rl-razorlite-kayak.html. NPL image captured by web.archive.org 5 times between March 16, 2016 and May 18, 2016; however Applicant is aware of products for sale on this page at least as early as August 4, 2015.	☐

If you wish to add additional non-patent literature document citation information please click the Add button

EXAMINER SIGNATURE

Examiner Signature	/LARS A OLSON/	Date Considered	09/11/2017

*EXAMINER: Initial if reference considered, whether or not citation is in conformance with MPEP 609. Draw line through a citation if not in conformance and not considered. Include copy of this form with next communication to applicant.

[1] See Kind Codes of USPTO Patent Documents at www.USPTO.GOV or MPEP 901.04. [2] Enter office that issued the document, by the two-letter code (WIPO Standard ST.3). [3] For Japanese patent documents, the indication of the year of the reign of the Emperor must precede the serial number of the patent document. [4] Kind of document by the appropriate symbols as indicated on the document under WIPO Standard ST.16 if possible. [5] Applicant is to place a check mark here if English language translation is attached.

ALL REFERENCES CONSIDERED EXCEPT WHERE LINED THROUGH. /L.A.O/

INFORMATION DISCLOSURE STATEMENT BY APPLICANT (Not for submission under 37 CFR 1.99)		
	Application Number	15230435
	Filing Date	2016-08-07
	First Named Inventor	Peter Hall
	Art Unit	3617
	Examiner Name	Olson, Lars A.
	Attorney Docket Number	3520-002-USP

CERTIFICATION STATEMENT

Please see 37 CFR 1.97 and 1.98 to make the appropriate selection(s):

☐ That each item of information contained in the information disclosure statement was first cited in any communication from a foreign patent office in a counterpart foreign application not more than three months prior to the filing of the information disclosure statement. See 37 CFR 1.97(e)(1).

OR

☐ That no item of information contained in the information disclosure statement was cited in a communication from a foreign patent office in a counterpart foreign application, and, to the knowledge of the person signing the certification after making reasonable inquiry, no item of information contained in the information disclosure statement was known to any individual designated in 37 CFR 1.56(c) more than three months prior to the filing of the information disclosure statement. See 37 CFR 1.97(e)(2).

☐ See attached certification statement.

☒ The fee set forth in 37 CFR 1.17 (p) has been submitted herewith.

☐ A certification statement is not submitted herewith.

SIGNATURE

A signature of the applicant or representative is required in accordance with CFR 1.33, 10.18. Please see CFR 1.4(d) for the form of the signature.

Signature	/Mark D. Trenner/	Date (YYYY-MM-DD)	2017-08-22
Name/Print	Mark D. Trenner	Registration Number	43961

This collection of information is required by 37 CFR 1.97 and 1.98. The information is required to obtain or retain a benefit by the public which is to file (and by the USPTO to process) an application. Confidentiality is governed by 35 U.S.C. 122 and 37 CFR 1.14. This collection is estimated to take 1 hour to complete, including gathering, preparing and submitting the completed application form to the USPTO. Time will vary depending upon the individual case. Any comments on the amount of time you require to complete this form and/or suggestions for reducing this burden, should be sent to the Chief Information Officer, U.S. Patent and Trademark Office, U.S. Department of Commerce, P.O. Box 1450, Alexandria, VA 22313-1450. DO NOT SEND FEES OR COMPLETED FORMS TO THIS ADDRESS. **SEND TO: Commissioner for Patents, P.O. Box 1450, Alexandria, VA 22313-1450.**

ALL REFERENCES CONSIDERED EXCEPT WHERE LINED THROUGH. /L.A.O/

Privacy Act Statement

The Privacy Act of 1974 (P.L. 93-579) requires that you be given certain information in connection with your submission of the attached form related to a patent application or patent. Accordingly, pursuant to the requirements of the Act, please be advised that: (1) the general authority for the collection of this information is 35 U.S.C. 2(b)(2); (2) furnishing of the information solicited is voluntary; and (3) the principal purpose for which the information is used by the U.S. Patent and Trademark Office is to process and/or examine your submission related to a patent application or patent. If you do not furnish the requested information, the U.S. Patent and Trademark Office may not be able to process and/or examine your submission, which may result in termination of proceedings or abandonment of the application or expiration of the patent.

The information provided by you in this form will be subject to the following routine uses:

1. The information on this form will be treated confidentially to the extent allowed under the Freedom of Information Act (5 U.S.C. 552) and the Privacy Act (5 U.S.C. 552a). Records from this system of records may be disclosed to the Department of Justice to determine whether the Freedom of Information Act requires disclosure of these record s.

2. A record from this system of records may be disclosed, as a routine use, in the course of presenting evidence to a court, magistrate, or administrative tribunal, including disclosures to opposing counsel in the course of settlement negotiations.

3. A record in this system of records may be disclosed, as a routine use, to a Member of Congress submitting a request involving an individual, to whom the record pertains, when the individual has requested assistance from the Member with respect to the subject matter of the record.

4. A record in this system of records may be disclosed, as a routine use, to a contractor of the Agency having need for the information in order to perform a contract. Recipients of information shall be required to comply with the requirements of the Privacy Act of 1974, as amended, pursuant to 5 U.S.C. 552a(m).

5. A record related to an International Application filed under the Patent Cooperation Treaty in this system of records may be disclosed, as a routine use, to the International Bureau of the World Intellectual Property Organization, pursuant to the Patent Cooperation Treaty.

6. A record in this system of records may be disclosed, as a routine use, to another federal agency for purposes of National Security review (35 U.S.C. 181) and for review pursuant to the Atomic Energy Act (42 U.S.C. 218(c)).

7. A record from this system of records may be disclosed, as a routine use, to the Administrator, General Services, or his/her designee, during an inspection of records conducted by GSA as part of that agency's responsibility to recommend improvements in records management practices and programs, under authority of 44 U.S.C. 2904 and 2906. Such disclosure shall be made in accordance with the GSA regulations governing inspection of records for this purpose, and any other relevant (i.e., GSA or Commerce) directive. Such disclosure shall not be used to make determinations about individuals.

8. A record from this system of records may be disclosed, as a routine use, to the public after either publication of the application pursuant to 35 U.S.C. 122(b) or issuance of a patent pursuant to 35 U.S.C. 151. Further, a record may be disclosed, subject to the limitations of 37 CFR 1.14, as a routine use, to the public if the record was filed in an application which became abandoned or in which the proceedings were terminated and which application is referenced by either a published application, an application open to public inspections or an issued patent.

9. A record from this system of records may be disclosed, as a routine use, to a Federal, State, or local law enforcement agency, if the USPTO becomes aware of a violation or potential violation of law or regulation.

ALL REFERENCES CONSIDERED EXCEPT WHERE LINED THROUGH. /L.A.O/

Search Notes	Application/Control No.	Applicant(s)/Patent Under Reexamination
	15230435	HALL, PETER
	Examiner	**Art Unit**
	LARS A OLSON	3617

CPC- SEARCHED

Symbol	Date	Examiner
B63B 35/73	9/12/2017	LO
B63B 35/79		
B63B 35/7913		
B63B 35/7916		
B63B 7/00		
B63B 7/08		
B63B 7/085		

CPC COMBINATION SETS - SEARCHED

Symbol	Date	Examiner

US CLASSIFICATION SEARCHED

Class	Subclass	Date	Examiner
441	65	9/12/2017	LO
441	66		
441	74		

* See search history printout included with this form or the SEARCH NOTES box below to determine the scope of the search.

SEARCH NOTES

Search Notes	Date	Examiner
See attached search history	9/12/2017	LO

INTERFERENCE SEARCH

US Class/ CPC Symbol	US Subclass / CPC Group	Date	Examiner

EAST Search History

EAST Search History (Prior Art)

Ref #	Hits	Search Query	DBs	Default Operator	Plurals	Time Stamp
L1	589	(441/65).CCLS.	US-PGPUB; USPAT; EPO; JPO; DERWENT	OR	OFF	2017/09/12 14:28
L2	144	(441/66).CCLS.	US-PGPUB; USPAT; EPO; JPO; DERWENT	OR	OFF	2017/09/12 14:29
L3	938	(441/74).CCLS.	US-PGPUB; USPAT; EPO; JPO; DERWENT	OR	OFF	2017/09/12 14:29
L4	2191	b63b35/73.cpc.	US-PGPUB; USPAT; USOCR; FPRS; EPO; JPO; DERWENT; IBM_TDB	OR	OFF	2017/09/12 14:29
L5	6	b63b35/73.cpc. and inflatable and paddle near board	US-PGPUB; USPAT; USOCR; FPRS; EPO; JPO; DERWENT; IBM_TDB	OR	OFF	2017/09/12 14:30
L6	12	b63b35/79.cpc. and inflatable and paddle near board	US-PGPUB; USPAT; USOCR; FPRS; EPO; JPO; DERWENT; IBM_TDB	OR	OFF	2017/09/12 14:31
L7	28	b63b35/7913.cpc. and inflatable and paddle near board	US-PGPUB; USPAT; USOCR; FPRS; EPO; JPO; DERWENT; IBM_TDB	OR	OFF	2017/09/12 14:31
L8	8	b63b35/7916.cpc. and inflatable and paddle near board	US-PGPUB; USPAT; USOCR; FPRS; EPO; JPO; DERWENT; IBM_TDB	OR	OFF	2017/09/12 14:32
L9	1	b63b7/00.cpc. and inflatable and paddle near board	US-PGPUB; USPAT; USOCR; FPRS; EPO; JPO; DERWENT; IBM_TDB	OR	OFF	2017/09/12 14:33
L10	3	b63b7/08.cpc. and inflatable and paddle near board	US-PGPUB; USPAT; USOCR; FPRS; EPO; JPO; DERWENT; IBM_TDB	OR	OFF	2017/09/12 14:33
L11	6	b63b7/085.cpc. and inflatable and paddle near board	US-PGPUB; USPAT; USOCR; FPRS; EPO; JPO; DERWENT; IBM_TDB	OR	OFF	2017/09/12 14:33

9/12/2017 2:34:09 PM
C:\Users\lolson\Documents\EAST\Workspaces\15230435.wsp

Index of Claims	Application/Control No.	Applicant(s)/Patent Under Reexamination
	15230435	HALL, PETER
	Examiner	**Art Unit**
	LARS A OLSON	3617

✓	Rejected	-	Cancelled	N	Non-Elected	A	Appeal
=	Allowed	÷	Restricted	I	Interference	O	Objected

☐ Claims renumbered in the same order as presented by applicant ☐ CPA ☐ T.D. ☐ R.1.47

CLAIM		DATE								
Final	Original	04/13/2017	09/13/2017							
	1	✓	=							
	2	✓	=							
	3	✓	=							
	4	O	-							
	5	O	=							
	6	O	=							
	7	O	=							
	8	✓	=							
	9	O	=							
	10	✓	=							
	11	✓	=							
	12	✓	=							
	13	✓	=							
	14	O	=							
	15	O	=							
	16	✓	=							
	17	O	-							
	18	O	✓							
	19	✓	=							
	20	=	=							
	21		✓							
	22		✓							

UNITED STATES PATENT AND TRADEMARK OFFICE

UNITED STATES DEPARTMENT OF COMMERCE
United States Patent and Trademark Office
Address: COMMISSIONER FOR PATENTS
P.O. Box 1450
Alexandria, Virginia 22313-1450
www.uspto.gov

NOTICE OF ALLOWANCE AND FEE(S) DUE

46317 7590 10/03/2017
TRENNER LAW FIRM, LLC
(Mark D. Trenner)
1153 Bergen Pkwy #i-115
Evergreen, CO 80439

EXAMINER
OLSON, LARS A

ART UNIT	PAPER NUMBER
3617	

DATE MAILED: 10/03/2017

APPLICATION NO.	FILING DATE	FIRST NAMED INVENTOR	ATTORNEY DOCKET NO.	CONFIRMATION NO.
15/230,435	08/07/2016	Peter Hall	3520-002-USP	2775

TITLE OF INVENTION: Inflatable Paddle Board

APPLN. TYPE	ENTITY STATUS	ISSUE FEE DUE	PUBLICATION FEE DUE	PREV. PAID ISSUE FEE	TOTAL FEE(S) DUE	DATE DUE
nonprovisional	SMALL	$480	$0	$0	$480	01/03/2018

THE APPLICATION IDENTIFIED ABOVE HAS BEEN EXAMINED AND IS ALLOWED FOR ISSUANCE AS A PATENT. PROSECUTION ON THE MERITS IS CLOSED. THIS NOTICE OF ALLOWANCE IS NOT A GRANT OF PATENT RIGHTS. THIS APPLICATION IS SUBJECT TO WITHDRAWAL FROM ISSUE AT THE INITIATIVE OF THE OFFICE OR UPON PETITION BY THE APPLICANT. SEE 37 CFR 1.313 AND MPEP 1308.

THE ISSUE FEE AND PUBLICATION FEE (IF REQUIRED) MUST BE PAID WITHIN THREE MONTHS FROM THE MAILING DATE OF THIS NOTICE OR THIS APPLICATION SHALL BE REGARDED AS ABANDONED. THIS STATUTORY PERIOD CANNOT BE EXTENDED. SEE 35 U.S.C. 151. THE ISSUE FEE DUE INDICATED ABOVE DOES NOT REFLECT A CREDIT FOR ANY PREVIOUSLY PAID ISSUE FEE IN THIS APPLICATION. IF AN ISSUE FEE HAS PREVIOUSLY BEEN PAID IN THIS APPLICATION (AS SHOWN ABOVE), THE RETURN OF PART B OF THIS FORM WILL BE CONSIDERED A REQUEST TO REAPPLY THE PREVIOUSLY PAID ISSUE FEE TOWARD THE ISSUE FEE NOW DUE.

HOW TO REPLY TO THIS NOTICE:

I. Review the ENTITY STATUS shown above. If the ENTITY STATUS is shown as SMALL or MICRO, verify whether entitlement to that entity status still applies.

If the ENTITY STATUS is the same as shown above, pay the TOTAL FEE(S) DUE shown above.

If the ENTITY STATUS is changed from that shown above, on PART B - FEE(S) TRANSMITTAL, complete section number 5 titled "Change in Entity Status (from status indicated above)".

For purposes of this notice, small entity fees are 1/2 the amount of undiscounted fees, and micro entity fees are 1/2 the amount of small entity fees.

II. PART B - FEE(S) TRANSMITTAL, or its equivalent, must be completed and returned to the United States Patent and Trademark Office (USPTO) with your ISSUE FEE and PUBLICATION FEE (if required). If you are charging the fee(s) to your deposit account, section "4b" of Part B - Fee(s) Transmittal should be completed and an extra copy of the form should be submitted. If an equivalent of Part B is filed, a request to reapply a previously paid issue fee must be clearly made, and delays in processing may occur due to the difficulty in recognizing the paper as an equivalent of Part B.

III. All communications regarding this application must give the application number. Please direct all communications prior to issuance to Mail Stop ISSUE FEE unless advised to the contrary.

IMPORTANT REMINDER: Maintenance fees are due in utility patents issuing on applications filed on or after Dec. 12, 1980. It is patentee's responsibility to ensure timely payment of maintenance fees when due. More information is available at www.uspto.gov/PatentMaintenanceFees.

PTOL-85 (Rev. 02/11)

BOTE EXHIBIT 1002, PAGE 82
IPR2024-00892

PART B - FEE(S) TRANSMITTAL

Complete and send this form, together with applicable fee(s), to: Mail **Mail Stop ISSUE FEE**
Commissioner for Patents
P.O. Box 1450
Alexandria, Virginia 22313-1450
or Fax (571)-273-2885

INSTRUCTIONS: This form should be used for transmitting the ISSUE FEE and PUBLICATION FEE (if required). Blocks 1 through 5 should be completed where appropriate. All further correspondence including the Patent, advance orders and notification of maintenance fees will be mailed to the current correspondence address as indicated unless corrected below or directed otherwise in Block 1, by (a) specifying a new correspondence address; and/or (b) indicating a separate "FEE ADDRESS" for maintenance fee notifications.

CURRENT CORRESPONDENCE ADDRESS (Note: Use Block 1 for any change of address)

46317 7590 10/03/2017
TRENNER LAW FIRM, LLC
(Mark D. Trenner)
1153 Bergen Pkwy #i-115
Evergreen, CO 80439

Note: A certificate of mailing can only be used for domestic mailings of the Fee(s) Transmittal. This certificate cannot be used for any other accompanying papers. Each additional paper, such as an assignment or formal drawing, must have its own certificate of mailing or transmission.

Certificate of Mailing or Transmission
I hereby certify that this Fee(s) Transmittal is being deposited with the United States Postal Service with sufficient postage for first class mail in an envelope addressed to the Mail Stop ISSUE FEE address above, or being facsimile transmitted to the USPTO (571) 273-2885, on the date indicated below.

(Depositor's name)
(Signature)
(Date)

APPLICATION NO.	FILING DATE	FIRST NAMED INVENTOR	ATTORNEY DOCKET NO.	CONFIRMATION NO.
15/230,435	08/07/2016	Peter Hall	3520-002-USP	2775

TITLE OF INVENTION: Inflatable Paddle Board

APPLN. TYPE	ENTITY STATUS	ISSUE FEE DUE	PUBLICATION FEE DUE	PREV. PAID ISSUE FEE	TOTAL FEE(S) DUE	DATE DUE
nonprovisional	SMALL	$480	$0	$0	$480	01/03/2018

EXAMINER	ART UNIT	CLASS-SUBCLASS
OLSON, LARS A	3617	441-066000

1. Change of correspondence address or indication of "Fee Address" (37 CFR 1.363).
❑ Change of correspondence address (or Change of Correspondence Address form PTO/SB/122) attached.
❑ "Fee Address" indication (or "Fee Address" Indication form PTO/SB/47; Rev 03-02 or more recent) attached. **Use of a Customer Number is required.**

2. For printing on the patent front page, list
(1) The names of up to 3 registered patent attorneys or agents OR, alternatively,
(2) The name of a single firm (having as a member a registered attorney or agent) and the names of up to 2 registered patent attorneys or agents. If no name is listed, no name will be printed.
1_____
2_____
3_____

3. ASSIGNEE NAME AND RESIDENCE DATA TO BE PRINTED ON THE PATENT (print or type)
PLEASE NOTE: Unless an assignee is identified below, no assignee data will appear on the patent. If an assignee is identified below, the document has been filed for recordation as set forth in 37 CFR 3.11. Completion of this form is NOT a substitute for filing an assignment.
(A) NAME OF ASSIGNEE (B) RESIDENCE: (CITY and STATE OR COUNTRY)

Please check the appropriate assignee category or categories (will not be printed on the patent) : ❑ Individual ❑ Corporation or other private group entity ❑ Government

4a. The following fee(s) are submitted:
❑ Issue Fee
❑ Publication Fee (No small entity discount permitted)
❑ Advance Order - # of Copies _____

4b. Payment of Fee(s): **(Please first reapply any previously paid issue fee shown above)**
❑ A check is enclosed.
❑ Payment by credit card. Form PTO-2038 is attached.
❑ The director is hereby authorized to charge the required fee(s), any deficiency, or credits any overpayment, to Deposit Account Number _____ (enclose an extra copy of this form).

5. **Change in Entity Status** (from status indicated above)
❑ Applicant certifying micro entity status. See 37 CFR 1.29 — NOTE: Absent a valid certification of Micro Entity Status (see forms PTO/SB/15A and 15B), issue fee payment in the micro entity amount will not be accepted at the risk of application abandonment.
❑ Applicant asserting small entity status. See 37 CFR 1.27 — NOTE: If the application was previously under micro entity status, checking this box will be taken to be a notification of loss of entitlement to micro entity status.
❑ Applicant changing to regular undiscounted fee status. — NOTE: Checking this box will be taken to be a notification of loss of entitlement to small or micro entity status, as applicable.

NOTE: This form must be signed in accordance with 37 CFR 1.31 and 1.33. See 37 CFR 1.4 for signature requirements and certifications.

Authorized Signature _____ Date _____

Typed or printed name _____ Registration No. _____

PTOL-85 Part B (10-13) Approved for use through 10/31/2013. OMB 0651-0033 U.S. Patent and Trademark Office; U.S. DEPARTMENT OF COMMERCE

BOTE EXHIBIT 1002, PAGE 83
IPR2024-00892

UNITED STATES PATENT AND TRADEMARK OFFICE

UNITED STATES DEPARTMENT OF COMMERCE
United States Patent and Trademark Office
Address: COMMISSIONER FOR PATENTS
P.O. Box 1450
Alexandria, Virginia 22313-1450
www.uspto.gov

APPLICATION NO.	FILING DATE	FIRST NAMED INVENTOR	ATTORNEY DOCKET NO.	CONFIRMATION NO.
15/230,435	08/07/2016	Peter Hall	3520-002-USP	2775

46317 7590 10/03/2017
TRENNER LAW FIRM, LLC
(Mark D. Trenner)
1153 Bergen Pkwy #i-115
Evergreen, CO 80439

EXAMINER
OLSON, LARS A

ART UNIT	PAPER NUMBER
3617	

DATE MAILED: 10/03/2017

Determination of Patent Term Adjustment under 35 U.S.C. 154 (b)
(Applications filed on or after May 29, 2000)

The Office has discontinued providing a Patent Term Adjustment (PTA) calculation with the Notice of Allowance.

Section 1(h)(2) of the AIA Technical Corrections Act amended 35 U.S.C. 154(b)(3)(B)(i) to eliminate the requirement that the Office provide a patent term adjustment determination with the notice of allowance. See Revisions to Patent Term Adjustment, 78 Fed. Reg. 19416, 19417 (Apr. 1, 2013). Therefore, the Office is no longer providing an initial patent term adjustment determination with the notice of allowance. The Office will continue to provide a patent term adjustment determination with the Issue Notification Letter that is mailed to applicant approximately three weeks prior to the issue date of the patent, and will include the patent term adjustment on the patent. Any request for reconsideration of the patent term adjustment determination (or reinstatement of patent term adjustment) should follow the process outlined in 37 CFR 1.705.

Any questions regarding the Patent Term Extension or Adjustment determination should be directed to the Office of Patent Legal Administration at (571)-272-7702. Questions relating to issue and publication fee payments should be directed to the Customer Service Center of the Office of Patent Publication at 1-(888)-786-0101 or (571)-272-4200.

PTOL-85 (Rev. 02/11)

OMB Clearance and PRA Burden Statement for PTOL-85 Part B

The Paperwork Reduction Act (PRA) of 1995 requires Federal agencies to obtain Office of Management and Budget approval before requesting most types of information from the public. When OMB approves an agency request to collect information from the public, OMB (i) provides a valid OMB Control Number and expiration date for the agency to display on the instrument that will be used to collect the information and (ii) requires the agency to inform the public about the OMB Control Number's legal significance in accordance with 5 CFR 1320.5(b).

The information collected by PTOL-85 Part B is required by 37 CFR 1.311. The information is required to obtain or retain a benefit by the public which is to file (and by the USPTO to process) an application. Confidentiality is governed by 35 U.S.C. 122 and 37 CFR 1.14. This collection is estimated to take 12 minutes to complete, including gathering, preparing, and submitting the completed application form to the USPTO. Time will vary depending upon the individual case. Any comments on the amount of time you require to complete this form and/or suggestions for reducing this burden, should be sent to the Chief Information Officer, U.S. Patent and Trademark Office, U.S. Department of Commerce, P.O. Box 1450, Alexandria, Virginia 22313-1450. DO NOT SEND FEES OR COMPLETED FORMS TO THIS ADDRESS. SEND TO: Commissioner for Patents, P.O. Box 1450, Alexandria, Virginia 22313-1450. Under the Paperwork Reduction Act of 1995, no persons are required to respond to a collection of information unless it displays a valid OMB control number.

Privacy Act Statement

The Privacy Act of 1974 (P.L. 93-579) requires that you be given certain information in connection with your submission of the attached form related to a patent application or patent. Accordingly, pursuant to the requirements of the Act, please be advised that: (1) the general authority for the collection of this information is 35 U.S.C. 2(b)(2); (2) furnishing of the information solicited is voluntary; and (3) the principal purpose for which the information is used by the U.S. Patent and Trademark Office is to process and/or examine your submission related to a patent application or patent. If you do not furnish the requested information, the U.S. Patent and Trademark Office may not be able to process and/or examine your submission, which may result in termination of proceedings or abandonment of the application or expiration of the patent.

The information provided by you in this form will be subject to the following routine uses:

1. The information on this form will be treated confidentially to the extent allowed under the Freedom of Information Act (5 U.S.C. 552) and the Privacy Act (5 U.S.C 552a). Records from this system of records may be disclosed to the Department of Justice to determine whether disclosure of these records is required by the Freedom of Information Act.
2. A record from this system of records may be disclosed, as a routine use, in the course of presenting evidence to a court, magistrate, or administrative tribunal, including disclosures to opposing counsel in the course of settlement negotiations.
3. A record in this system of records may be disclosed, as a routine use, to a Member of Congress submitting a request involving an individual, to whom the record pertains, when the individual has requested assistance from the Member with respect to the subject matter of the record.
4. A record in this system of records may be disclosed, as a routine use, to a contractor of the Agency having need for the information in order to perform a contract. Recipients of information shall be required to comply with the requirements of the Privacy Act of 1974, as amended, pursuant to 5 U.S.C. 552a(m).
5. A record related to an International Application filed under the Patent Cooperation Treaty in this system of records may be disclosed, as a routine use, to the International Bureau of the World Intellectual Property Organization, pursuant to the Patent Cooperation Treaty.
6. A record in this system of records may be disclosed, as a routine use, to another federal agency for purposes of National Security review (35 U.S.C. 181) and for review pursuant to the Atomic Energy Act (42 U.S.C. 218(c)).
7. A record from this system of records may be disclosed, as a routine use, to the Administrator, General Services, or his/her designee, during an inspection of records conducted by GSA as part of that agency's responsibility to recommend improvements in records management practices and programs, under authority of 44 U.S.C. 2904 and 2906. Such disclosure shall be made in accordance with the GSA regulations governing inspection of records for this purpose, and any other relevant (i.e., GSA or Commerce) directive. Such disclosure shall not be used to make determinations about individuals.
8. A record from this system of records may be disclosed, as a routine use, to the public after either publication of the application pursuant to 35 U.S.C. 122(b) or issuance of a patent pursuant to 35 U.S.C. 151. Further, a record may be disclosed, subject to the limitations of 37 CFR 1.14, as a routine use, to the public if the record was filed in an application which became abandoned or in which the proceedings were terminated and which application is referenced by either a published application, an application open to public inspection or an issued patent.
9. A record from this system of records may be disclosed, as a routine use, to a Federal, State, or local law enforcement agency, if the USPTO becomes aware of a violation or potential violation of law or regulation.

Applicant-Initiated Interview Summary	Application No.	Applicant(s)	
	15/230,435	HALL, PETER	
	Examiner	Art Unit	
	Lars A. Olson	3617	

All participants (applicant, applicant's representative, PTO personnel):

(1) *Lars A. Olson*. (3)_____.

(2) *Mark D. Trenner, applicant's attorney*. (4)_____.

Date of Interview: *27 September 2017*.

Type: ☒ Telephonic ☐ Video Conference
☐ Personal [copy given to: ☐ applicant ☐ applicant's representative]

Exhibit shown or demonstration conducted: ☐ Yes ☐ No.
If Yes, brief description: _____.

Issues Discussed ☐101 ☒112 ☐102 ☐103 ☐Others
(For each of the checked box(es) above, please describe below the issue and detailed description of the discussion)

Claim(s) discussed: *18,21 and 22*.

Identification of prior art discussed: _____.

Substance of Interview
(For each issue discussed, provide a detailed description and indicate if agreement was reached. Some topics may include: identification or clarification of a reference or a portion thereof, claim interpretation, proposed amendments, arguments of any applied references etc...)

Applicant's attorney authorized the examiner by Examiner's Amendment to amend claim 18 to depend from claim 16, and to add a period at the end of claims 21 and 22 in order to place them in the form of a single complete sentence.

Applicant recordation instructions: The formal written reply to the last Office action must include the substance of the interview. (See MPEP section 713.04). If a reply to the last Office action has already been filed, applicant is given a non-extendable period of the longer of one month or thirty days from this interview date, or the mailing date of this interview summary form, whichever is later, to file a statement of the substance of the interview

Examiner recordation instructions: Examiners must summarize the substance of any interview of record. A complete and proper recordation of the substance of an interview should include the items listed in MPEP 713.04 for complete and proper recordation including the identification of the general thrust of each argument or issue discussed, a general indication of any other pertinent matters discussed regarding patentability and the general results or outcome of the interview, to include an indication as to whether or not agreement was reached on the issues raised.

☐ Attachment

/Lars A. Olson/
Primary Examiner, Art Unit 3617

Summary of Record of Interview Requirements

Manual of Patent Examining Procedure (MPEP), Section 713.04, Substance of Interview Must be Made of Record
A complete written statement as to the substance of any face-to-face, video conference, or telephone interview with regard to an application must be made of record in the application whether or not an agreement with the examiner was reached at the interview.

Title 37 Code of Federal Regulations (CFR) § 1.133 Interviews
Paragraph (b)

In every instance where reconsideration is requested in view of an interview with an examiner, a complete written statement of the reasons presented at the interview as warranting favorable action must be filed by the applicant. An interview does not remove the necessity for reply to Office action as specified in §§ 1.111, 1.135. (35 U.S.C. 132)

37 CFR §1.2 Business to be transacted in writing.
All business with the Patent or Trademark Office should be transacted in writing. The personal attendance of applicants or their attorneys or agents at the Patent and Trademark Office is unnecessary. The action of the Patent and Trademark Office will be based exclusively on the written record in the Office. No attention will be paid to any alleged oral promise, stipulation, or understanding in relation to which there is disagreement or doubt.

The action of the Patent and Trademark Office cannot be based exclusively on the written record in the Office if that record is itself incomplete through the failure to record the substance of interviews.

It is the responsibility of the applicant or the attorney or agent to make the substance of an interview of record in the application file, unless the examiner indicates he or she will do so. It is the examiner's responsibility to see that such a record is made and to correct material inaccuracies which bear directly on the question of patentability.

Examiners must complete an Interview Summary Form for each interview held where a matter of substance has been discussed during the interview by checking the appropriate boxes and filling in the blanks. Discussions regarding only procedural matters, directed solely to restriction requirements for which interview recordation is otherwise provided for in Section 812.01 of the Manual of Patent Examining Procedure, or pointing out typographical errors or unreadable script in Office actions or the like, are excluded from the interview recordation procedures below. Where the substance of an interview is completely recorded in an Examiners Amendment, no separate Interview Summary Record is required.

The Interview Summary Form shall be given an appropriate Paper No., placed in the right hand portion of the file, and listed on the "Contents" section of the file wrapper. In a personal interview, a duplicate of the Form is given to the applicant (or attorney or agent) at the conclusion of the interview. In the case of a telephone or video-conference interview, the copy is mailed to the applicant's correspondence address either with or prior to the next official communication. If additional correspondence from the examiner is not likely before an allowance or if other circumstances dictate, the Form should be mailed promptly after the interview rather than with the next official communication.

The Form provides for recordation of the following information:
- Application Number (Series Code and Serial Number)
- Name of applicant
- Name of examiner
- Date of interview
- Type of interview (telephonic, video-conference, or personal)
- Name of participant(s) (applicant, attorney or agent, examiner, other PTO personnel, etc.)
- An indication whether or not an exhibit was shown or a demonstration conducted
- An identification of the specific prior art discussed
- An indication whether an agreement was reached and if so, a description of the general nature of the agreement (may be by attachment of a copy of amendments or claims agreed as being allowable). Note: Agreement as to allowability is tentative and does not restrict further action by the examiner to the contrary.
- The signature of the examiner who conducted the interview (if Form is not an attachment to a signed Office action)

It is desirable that the examiner orally remind the applicant of his or her obligation to record the substance of the interview of each case. It should be noted, however, that the Interview Summary Form will not normally be considered a complete and proper recordation of the interview unless it includes, or is supplemented by the applicant or the examiner to include, all of the applicable items required below concerning the substance of the interview.

A complete and proper recordation of the substance of any interview should include at least the following applicable items:
1) A brief description of the nature of any exhibit shown or any demonstration conducted,
2) an identification of the claims discussed,
3) an identification of the specific prior art discussed,
4) an identification of the principal proposed amendments of a substantive nature discussed, unless these are already described on the Interview Summary Form completed by the Examiner,
5) a brief identification of the general thrust of the principal arguments presented to the examiner,
   (The identification of arguments need not be lengthy or elaborate. A verbatim or highly detailed description of the arguments is not required. The identification of the arguments is sufficient if the general nature or thrust of the principal arguments made to the examiner can be understood in the context of the application file. Of course, the applicant may desire to emphasize and fully describe those arguments which he or she feels were or might be persuasive to the examiner.)
6) a general indication of any other pertinent matters discussed, and
7) if appropriate, the general results or outcome of the interview unless already described in the Interview Summary Form completed by the examiner.

Examiners are expected to carefully review the applicant's record of the substance of an interview. If the record is not complete and accurate, the examiner will give the applicant an extendable one month time period to correct the record.

Examiner to Check for Accuracy

If the claims are allowable for other reasons of record, the examiner should send a letter setting forth the examiner's version of the statement attributed to him or her. If the record is complete and accurate, the examiner should place the indication, "Interview Record OK" on the paper recording the substance of the interview along with the date and the examiner's initials.

Notice of Allowability	Application No. 15/230,435	Applicant(s) HALL, PETER	
	Examiner Lars A. Olson	Art Unit 3617	AIA (First Inventor to File) Status Yes

-- The MAILING DATE of this communication appears on the cover sheet with the correspondence address--

All claims being allowable, PROSECUTION ON THE MERITS IS (OR REMAINS) CLOSED in this application. If not included herewith (or previously mailed), a Notice of Allowance (PTOL-85) or other appropriate communication will be mailed in due course. **THIS NOTICE OF ALLOWABILITY IS NOT A GRANT OF PATENT RIGHTS.** This application is subject to withdrawal from issue at the initiative of the Office or upon petition by the applicant. See 37 CFR 1.313 and MPEP 1308.

1. ☒ This communication is responsive to *the interview conducted on 9/27/2017*.
   ☐ A declaration(s)/affidavit(s) under **37 CFR 1.130(b)** was/were filed on_____.
2. ☐ An election was made by the applicant in response to a restriction requirement set forth during the interview on _____; the restriction requirement and election have been incorporated into this action.
3. ☒ The allowed claim(s) is/are *1-3,5-16 and 18-22*. As a result of the allowed claim(s), you may be eligible to benefit from the **Patent Prosecution Highway** program at a participating intellectual property office for the corresponding application. For more information, please see http://www.uspto.gov/patents/init_events/pph/index.jsp or send an inquiry to PPHfeedback@uspto.gov.
4. ☐ Acknowledgment is made of a claim for foreign priority under 35 U.S.C. § 119(a)-(d) or (f).

   Certified copies:

   a) ☐ All b) ☐ Some *c) ☐ None of the:
   1. ☐ Certified copies of the priority documents have been received.
   2. ☐ Certified copies of the priority documents have been received in Application No. _____ .
   3. ☐ Copies of the certified copies of the priority documents have been received in this national stage application from the International Bureau (PCT Rule 17.2(a)).

   * Certified copies not received: _____.

Applicant has THREE MONTHS FROM THE "MAILING DATE" of this communication to file a reply complying with the requirements noted below. Failure to timely comply will result in ABANDONMENT of this application.
THIS THREE-MONTH PERIOD IS NOT EXTENDABLE.

5. ☐ CORRECTED DRAWINGS (as "replacement sheets") must be submitted.
   ☐ including changes required by the attached Examiner's Amendment / Comment or in the Office action of Paper No./Mail Date _____.

   Identifying indicia such as the application number (see 37 CFR 1.84(c)) should be written on the drawings in the front (not the back) of each sheet. Replacement sheet(s) should be labeled as such in the header according to 37 CFR 1.121(d).
6. ☐ DEPOSIT OF and/or INFORMATION about the deposit of BIOLOGICAL MATERIAL must be submitted. Note the attached Examiner's comment regarding REQUIREMENT FOR THE DEPOSIT OF BIOLOGICAL MATERIAL.

Attachment(s)

1. ☐ Notice of References Cited (PTO-892)
2. ☐ Information Disclosure Statements (PTO/SB/08), Paper No./Mail Date _____
3. ☐ Examiner's Comment Regarding Requirement for Deposit of Biological Material
4. ☒ Interview Summary (PTO-413), Paper No./Mail Date *9/27/2017* .
5. ☒ Examiner's Amendment/Comment
6. ☒ Examiner's Statement of Reasons for Allowance
7. ☐ Other _____.

Examiner's Amendment

1. An examiner's amendment to the record appears below. Should the changes and/or additions be unacceptable to applicant, an amendment may be filed as provided by 37 CFR 1.312. To ensure consideration of such an amendment, it MUST be submitted no later than the payment of the issue fee.

2. Authorization for this examiner's amendment was given in an interview with the applicant's attorney, Mark D. Trenner, on September 27, 2017.

The application has been amended as follows:

On line 1 of claim 18, the phrase "claim 17" has been deleted and replaced with the phrase "claim 16" since claim 17 has been cancelled.

On line 6 of claim 21, a period "." has been added after the word "chamber" in order to place the claim in the form of a single complete sentence.

On line 6 of claim 22, a period "." has been added after the word "chamber" in order to place the claim in the form of a single complete sentence.

3. Claims 4 and 17 have been cancelled.

Reasons for Allowance

4. Claims 1-3, 5-16 and 18-22 are allowed.

5. The following is an examiner's statement of reasons for allowance: The inflatable paddle board as claimed is not shown or suggested in the prior art because of

the use of an inflatable paddle board that includes first and second inflatable chambers that are interconnected with only one fill valve, or a tent covering between a lower inflatable chamber and an upper inflatable chamber, or a second inflatable chamber that under-hangs a first inflatable chamber for at least 5% of the length of said first inflatable chamber.

6. The prior art as disclosed by Dingel (US 9,114,862) shows the use of an inflatable paddle board having at least one inflatable chamber with drop-stitch material. Klimenko (US 6,394,018) discloses an inflatable watercraft having first and second inflatable chambers, where said second inflatable chamber at least partially overhangs a front portion of said first inflatable chamber.

Conclusion

7. Any comments considered necessary by applicant must be submitted no later than the payment of the issue fee and, to avoid processing delays, should preferably accompany the issue fee. Such submissions should be clearly labeled “Comments on Statement of Reasons for Allowance.”

8. Any inquiry concerning this communication from the examiner should be directed to Exr. Lars Olson whose telephone number is (571) 272-6685.

lo

September 27, 2017

/Lars A. Olson/

Primary Examiner, Art Unit 3617

Applicant-Initiated Interview Summary	Application No.	Applicant(s)	
	15/230,435	HALL, PETER	
	Examiner	Art Unit	
	Lars A. Olson	3617	

All participants (applicant, applicant's representative, PTO personnel):

(1) *Lars A. Olson*. (3)_____.

(2) *Mark D. Trenner, applicant's attorney*. (4)_____.

Date of Interview: *27 September 2017*.

Type: ☒ Telephonic ☐ Video Conference
☐ Personal [copy given to: ☐ applicant ☐ applicant's representative]

Exhibit shown or demonstration conducted: ☐ Yes ☐ No.
If Yes, brief description: _____.

Issues Discussed ☐101 ☒112 ☐102 ☐103 ☐Others
(For each of the checked box(es) above, please describe below the issue and detailed description of the discussion)

Claim(s) discussed: *18,21 and 22*.

Identification of prior art discussed: _____.

Substance of Interview
(For each issue discussed, provide a detailed description and indicate if agreement was reached. Some topics may include: identification or clarification of a reference or a portion thereof, claim interpretation, proposed amendments, arguments of any applied references etc...)

Applicant's attorney authorized the examiner by Examiner's Amendment to amend claim 18 to depend from claim 16, and to add a period at the end of claims 21 and 22 in order to place them in the form of a single complete sentence.

Applicant recordation instructions: The formal written reply to the last Office action must include the substance of the interview. (See MPEP section 713.04). If a reply to the last Office action has already been filed, applicant is given a non-extendable period of the longer of one month or thirty days from this interview date, or the mailing date of this interview summary form, whichever is later, to file a statement of the substance of the interview

Examiner recordation instructions: Examiners must summarize the substance of any interview of record. A complete and proper recordation of the substance of an interview should include the items listed in MPEP 713.04 for complete and proper recordation including the identification of the general thrust of each argument or issue discussed, a general indication of any other pertinent matters discussed regarding patentability and the general results or outcome of the interview, to include an indication as to whether or not agreement was reached on the issues raised.

☐ Attachment

/Lars A. Olson/
Primary Examiner, Art Unit 3617

Summary of Record of Interview Requirements

Manual of Patent Examining Procedure (MPEP), Section 713.04, Substance of Interview Must be Made of Record
A complete written statement as to the substance of any face-to-face, video conference, or telephone interview with regard to an application must be made of record in the application whether or not an agreement with the examiner was reached at the interview.

Title 37 Code of Federal Regulations (CFR) § 1.133 Interviews
Paragraph (b)

In every instance where reconsideration is requested in view of an interview with an examiner, a complete written statement of the reasons presented at the interview as warranting favorable action must be filed by the applicant. An interview does not remove the necessity for reply to Office action as specified in §§ 1.111, 1.135. (35 U.S.C. 132)

37 CFR §1.2 Business to be transacted in writing.
All business with the Patent or Trademark Office should be transacted in writing. The personal attendance of applicants or their attorneys or agents at the Patent and Trademark Office is unnecessary. The action of the Patent and Trademark Office will be based exclusively on the written record in the Office. No attention will be paid to any alleged oral promise, stipulation, or understanding in relation to which there is disagreement or doubt.

The action of the Patent and Trademark Office cannot be based exclusively on the written record in the Office if that record is itself incomplete through the failure to record the substance of interviews.

It is the responsibility of the applicant or the attorney or agent to make the substance of an interview of record in the application file, unless the examiner indicates he or she will do so. It is the examiner's responsibility to see that such a record is made and to correct material inaccuracies which bear directly on the question of patentability.

Examiners must complete an Interview Summary Form for each interview held where a matter of substance has been discussed during the interview by checking the appropriate boxes and filling in the blanks. Discussions regarding only procedural matters, directed solely to restriction requirements for which interview recordation is otherwise provided for in Section 812.01 of the Manual of Patent Examining Procedure, or pointing out typographical errors or unreadable script in Office actions or the like, are excluded from the interview recordation procedures below. Where the substance of an interview is completely recorded in an Examiners Amendment, no separate Interview Summary Record is required.

The Interview Summary Form shall be given an appropriate Paper No., placed in the right hand portion of the file, and listed on the "Contents" section of the file wrapper. In a personal interview, a duplicate of the Form is given to the applicant (or attorney or agent) at the conclusion of the interview. In the case of a telephone or video-conference interview, the copy is mailed to the applicant's correspondence address either with or prior to the next official communication. If additional correspondence from the examiner is not likely before an allowance or if other circumstances dictate, the Form should be mailed promptly after the interview rather than with the next official communication.

The Form provides for recordation of the following information:
- Application Number (Series Code and Serial Number)
- Name of applicant
- Name of examiner
- Date of interview
- Type of interview (telephonic, video-conference, or personal)
- Name of participant(s) (applicant, attorney or agent, examiner, other PTO personnel, etc.)
- An indication whether or not an exhibit was shown or a demonstration conducted
- An identification of the specific prior art discussed
- An indication whether an agreement was reached and if so, a description of the general nature of the agreement (may be by attachment of a copy of amendments or claims agreed as being allowable). Note: Agreement as to allowability is tentative and does not restrict further action by the examiner to the contrary.
- The signature of the examiner who conducted the interview (if Form is not an attachment to a signed Office action)

It is desirable that the examiner orally remind the applicant of his or her obligation to record the substance of the interview of each case. It should be noted, however, that the Interview Summary Form will not normally be considered a complete and proper recordation of the interview unless it includes, or is supplemented by the applicant or the examiner to include, all of the applicable items required below concerning the substance of the interview.

A complete and proper recordation of the substance of any interview should include at least the following applicable items:
1) A brief description of the nature of any exhibit shown or any demonstration conducted,
2) an identification of the claims discussed,
3) an identification of the specific prior art discussed,
4) an identification of the principal proposed amendments of a substantive nature discussed, unless these are already described on the Interview Summary Form completed by the Examiner,
5) a brief identification of the general thrust of the principal arguments presented to the examiner,
   (The identification of arguments need not be lengthy or elaborate. A verbatim or highly detailed description of the arguments is not required. The identification of the arguments is sufficient if the general nature or thrust of the principal arguments made to the examiner can be understood in the context of the application file. Of course, the applicant may desire to emphasize and fully describe those arguments which he or she feels were or might be persuasive to the examiner.)
6) a general indication of any other pertinent matters discussed, and
7) if appropriate, the general results or outcome of the interview unless already described in the Interview Summary Form completed by the examiner.

Examiners are expected to carefully review the applicant's record of the substance of an interview. If the record is not complete and accurate, the examiner will give the applicant an extendable one month time period to correct the record.

Examiner to Check for Accuracy

If the claims are allowable for other reasons of record, the examiner should send a letter setting forth the examiner's version of the statement attributed to him or her. If the record is complete and accurate, the examiner should place the indication, "Interview Record OK" on the paper recording the substance of the interview along with the date and the examiner's initials.

Search Notes	Application/Control No.	Applicant(s)/Patent Under Reexamination
	15230435	HALL, PETER
	Examiner	**Art Unit**
	LARS A OLSON	3617

CPC- SEARCHED

Symbol	Date	Examiner
B63B 35/73	9/27/2017	LO
B63B 35/79		
B63B 35/7913		
B63B 35/7916		
B63B 7/00		
B63B 7/08		
B63B 7/085		

CPC COMBINATION SETS - SEARCHED

Symbol	Date	Examiner

US CLASSIFICATION SEARCHED

Class	Subclass	Date	Examiner
441	65	9/27/2017	LO
441	66		
441	74		

* See search history printout included with this form or the SEARCH NOTES box below to determine the scope of the search.

SEARCH NOTES

Search Notes	Date	Examiner
See attached search history	9/27/2017	LO

INTERFERENCE SEARCH

US Class/ CPC Symbol	US Subclass / CPC Group	Date	Examiner

INTERFERENCE SEARCH			
US Class/ CPC Symbol	**US Subclass / CPC Group**	**Date**	**Examiner**
EAST Search	All listed above	9/27/2017	LO

EAST Search History

EAST Search History (Prior Art)

Ref #	Hits	Search Query	DBs	Default Operator	Plurals	Time Stamp
L1	0	b63b35/73.cpc. and inflatable and paddle near board and first adj chamber and second adj chamber	US-PGPUB; USPAT; USOCR; FPRS; EPO; JPO; DERWENT; IBM_TDB	OR	OFF	2017/09/27 12:53
L2	0	b63b35/79.cpc. and inflatable and paddle near board and first adj chamber and second adj chamber	US-PGPUB; USPAT; USOCR; FPRS; EPO; JPO; DERWENT; IBM_TDB	OR	OFF	2017/09/27 12:53
L3	1	b63b35/7913.cpc. and inflatable and paddle near board and first adj chamber and second adj chamber	US-PGPUB; USPAT; USOCR; FPRS; EPO; JPO; DERWENT; IBM_TDB	OR	OFF	2017/09/27 12:53
L4	1	inflatable and paddle near board and first adj chamber and second adj chamber	US-PGPUB; USPAT; EPO; JPO; DERWENT	OR	OFF	2017/09/27 12:53
L5	1	b63b35/7916.cpc. and inflatable and paddle near board and first adj chamber and second adj chamber	US-PGPUB; USPAT; USOCR; FPRS; EPO; JPO; DERWENT; IBM_TDB	OR	OFF	2017/09/27 12:54
L6	0	b63b7/00.cpc. and inflatable and paddle near board and first adj chamber and second adj chamber	US-PGPUB; USPAT; USOCR; FPRS; EPO; JPO; DERWENT; IBM_TDB	OR	OFF	2017/09/27 12:54
L7	0	b63b7/08.cpc. and inflatable and paddle near board and first adj chamber and second adj chamber	US-PGPUB; USPAT; USOCR; FPRS; EPO; JPO; DERWENT; IBM_TDB	OR	OFF	2017/09/27 12:54
L8	0	b63b7/085.cpc. and inflatable and paddle near board and first adj chamber and second adj chamber	US-PGPUB; USPAT; USOCR; FPRS; EPO; JPO; DERWENT; IBM_TDB	OR	OFF	2017/09/27 12:54
L9	382	inflatable and board and first adj chamber and second adj chamber	US-PGPUB; USPAT; EPO; JPO; DERWENT	OR	OFF	2017/09/27 12:55
L10	6	inflatable and board and first adj chamber and second adj chamber and tent	US-PGPUB; USPAT; EPO; JPO; DERWENT	OR	OFF	2017/09/27 12:55
S1	589	(441/65).CCLS.	US-PGPUB; USPAT; EPO; JPO; DERWENT	OR	OFF	2017/09/12 14:28
S2	144	(441/66).CCLS.	US-PGPUB; USPAT; EPO; JPO; DERWENT	OR	OFF	2017/09/12 14:29
S3	938	(441/74).CCLS.	US-PGPUB; USPAT; EPO; JPO; DERWENT	OR	OFF	2017/09/12 14:29
S4	2191	b63b35/73.cpc.	US-PGPUB; USPAT; USOCR; FPRS; EPO;	OR	OFF	2017/09/12 14:29

			JPO; DERWENT; IBM_TDB			
S5	6	b63b35/73.cpc. and inflatable and paddle near board	US-PGPUB; USPAT; USOCR; FPRS; EPO; JPO; DERWENT; IBM_TDB	OR	OFF	2017/09/12 14:30
S6	12	b63b35/79.cpc. and inflatable and paddle near board	US-PGPUB; USPAT; USOCR; FPRS; EPO; JPO; DERWENT; IBM_TDB	OR	OFF	2017/09/12 14:31
S7	28	b63b35/7913.cpc. and inflatable and paddle near board	US-PGPUB; USPAT; USOCR; FPRS; EPO; JPO; DERWENT; IBM_TDB	OR	OFF	2017/09/12 14:31
S8	8	b63b35/7916.cpc. and inflatable and paddle near board	US-PGPUB; USPAT; USOCR; FPRS; EPO; JPO; DERWENT; IBM_TDB	OR	OFF	2017/09/12 14:32
S9	1	b63b7/00.cpc. and inflatable and paddle near board	US-PGPUB; USPAT; USOCR; FPRS; EPO; JPO; DERWENT; IBM_TDB	OR	OFF	2017/09/12 14:33
S10	3	b63b7/08.cpc. and inflatable and paddle near board	US-PGPUB; USPAT; USOCR; FPRS; EPO; JPO; DERWENT; IBM_TDB	OR	OFF	2017/09/12 14:33
S11	6	b63b7/085.cpc. and inflatable and paddle near board	US-PGPUB; USPAT; USOCR; FPRS; EPO; JPO; DERWENT; IBM_TDB	OR	OFF	2017/09/12 14:33

9/27/2017 12:56:32 PM
C:\Users\lolson\Documents\EAST\Workspaces\15230435.wsp

Index of Claims	Application/Control No.	Applicant(s)/Patent Under Reexamination
	15230435	HALL, PETER
	Examiner	**Art Unit**
	LARS A OLSON	3617

✓	Rejected	-	Cancelled	N	Non-Elected	A	Appeal
=	Allowed	÷	Restricted	I	Interference	O	Objected

☐ Claims renumbered in the same order as presented by applicant ☐ CPA ☐ T.D. ☐ R.1.47

CLAIM		DATE								
Final	Original	04/13/2017	09/13/2017	09/27/2017						
1	1	✓	=	=						
2	2	✓	=	=						
3	3	✓	=	=						
	4	O	-	-						
4	5	O	=	=						
5	6	O	=	=						
6	7	O	=	=						
7	8	✓	=	=						
8	9	O	=	=						
9	10	✓	=	=						
10	11	✓	=	=						
11	12	✓	=	=						
12	13	✓	=	=						
13	14	O	=	=						
14	15	O	=	=						
15	16	✓	=	=						
	17	O	-	-						
16	18	O	✓	=						
17	19	✓	=	=						
18	20	=	=	=						
19	21		✓	=						
20	22		✓	=						

Issue Classification	Application/Control No.	Applicant(s)/Patent Under Reexamination
	15230435	HALL, PETER
	Examiner	**Art Unit**
	LARS A OLSON	3617

CPC

Symbol					Type	Version
B63B		35	/	7913	F	2013-01-01
B63B		35	/	7916	I	2013-01-01
			/			
			/			
			/			
			/			
			/			
			/			
			/			
			/			
			/			
			/			
			/			
			/			
			/			

CPC Combination Sets

Symbol					Type	Set	Ranking	Version
			/					
			/					

NONE (Assistant Examiner)	(Date)	**Total Claims Allowed:** 20	
/LARS A OLSON/ Primary Examiner.Art Unit 3617 (Primary Examiner)	09/27/2017 (Date)	O.G. Print Claim(s) 20	O.G. Print Figure 1

U.S. Patent and Trademark Office

Part of Paper No. 09272017

Issue Classification	Application/Control No.	Applicant(s)/Patent Under Reexamination
	15230435	HALL, PETER
	Examiner	**Art Unit**
	LARS A OLSON	3617

US ORIGINAL CLASSIFICATION		INTERNATIONAL CLASSIFICATION	
CLASS	SUBCLASS	CLAIMED	NON-CLAIMED
441	66	B 6 3 B 35 / 7913	
		B 6 3 B 35 / 7916	

CROSS REFERENCE(S)					
CLASS	SUBCLASS (ONE SUBCLASS PER BLOCK)				

NONE (Assistant Examiner)	(Date)	**Total Claims Allowed:** 20	
/LARS A OLSON/ Primary Examiner.Art Unit 3617 (Primary Examiner)	09/27/2017 (Date)	O.G. Print Claim(s) 20	O.G. Print Figure 1

U.S. Patent and Trademark Office

Part of Paper No. 09272017

Issue Classification	Application/Control No.	Applicant(s)/Patent Under Reexamination
	15230435	HALL, PETER
	Examiner	**Art Unit**
	LARS A OLSON	3617

☐ Claims renumbered in the same order as presented by applicant ☐ CPA ☐ T.D. ☐ R.1.47

Final	Original	Final	Original	Final	Original	Final	Original	Final	Original	Final	Original	Final	Original	Final	Original
1	1		17												
2	2	16	18												
3	3	17	19												
	4	18	20												
4	5	19	21												
5	6	20	22												
6	7														
7	8														
8	9														
9	10														
10	11														
11	12														
12	13														
13	14														
14	15														
15	16														

NONE (Assistant Examiner)	(Date)	**Total Claims Allowed:** 20	
/LARS A OLSON/ Primary Examiner.Art Unit 3617 (Primary Examiner)	09/27/2017 (Date)	O.G. Print Claim(s) 20	O.G. Print Figure 1

U.S. Patent and Trademark Office

Part of Paper No. 09272017

PART B - FEE(S) TRANSMITTAL

Complete and send this form, together with applicable fee(s), to: Mail **Mail Stop ISSUE FEE**
Commissioner for Patents
P.O. Box 1450
Alexandria, Virginia 22313-1450
or Fax (571)-273-2885

INSTRUCTIONS: This form should be used for transmitting the ISSUE FEE and PUBLICATION FEE (if required). Blocks 1 through 5 should be completed where appropriate. All further correspondence including the Patent, advance orders and notification of maintenance fees will be mailed to the current correspondence address as indicated unless corrected below or directed otherwise in Block 1, by (a) specifying a new correspondence address; and/or (b) indicating a separate "FEE ADDRESS" for maintenance fee notifications.

CURRENT CORRESPONDENCE ADDRESS (Note: Use Block 1 for any change of address)

46317 2590 09/03/2017
TRENNER LAW FIRM, LLC
(Mark D. Trenner)
1153 Bergen Pkwy #i-115
Evergreen, CO 80439

Note: A certificate of mailing can only be used for domestic mailings of the Fee(s) Transmittal. This certificate cannot be used for any other accompanying papers. Each additional paper, such as an assignment or formal drawing, must have its own certificate of mailing or transmission.

Certificate of Mailing or Transmission
I hereby certify that this Fee(s) Transmittal is being deposited with the United States Postal Service with sufficient postage for first class mail in an envelope addressed to the Mail Stop ISSUE FEE address above, or being facsimile transmitted to the USPTO (571) 273-2885, on the date indicated below.

(Depositor's name)
(Signature)
(Date)

APPLICATION NO.	FILING DATE	FIRST NAMED INVENTOR	ATTORNEY DOCKET NO.	CONFIRMATION NO.
15/230,435	08/07/2016	Peter Hall	3520-002-USP	2775

TITLE OF INVENTION: Inflatable Paddle Board

APPLN. TYPE	ENTITY STATUS	ISSUE FEE DUE	PUBLICATION FEE DUE	PREV. PAID ISSUE FEE	TOTAL FEE(S) DUE	DATE DUE
nonprovisional	SMALL	$480	$0	$0	$480	01/03/2018

EXAMINER	ART UNIT	CLASS-SUBCLASS
OLSON, LARS A	3617	441-066000

1. Change of correspondence address or indication of "Fee Address" (37 CFR 1.363).
- ☐ Change of correspondence address (or Change of Correspondence Address form PTO/SB/122) attached.
- ☐ "Fee Address" indication (or "Fee Address" Indication form PTO/SB/47; Rev 03-02 or more recent) attached. **Use of a Customer Number is required.**

2. For printing on the patent front page, list
(1) The names of up to 3 registered patent attorneys or agents OR, alternatively,
(2) The name of a single firm (having as a member a registered attorney or agent) and the names of up to 2 registered patent attorneys or agents. If no name is listed, no name will be printed.

1. Trenner Law Firm, LLC
2. Mark D. Trenner
3.

3. ASSIGNEE NAME AND RESIDENCE DATA TO BE PRINTED ON THE PATENT (print or type)
PLEASE NOTE: Unless an assignee is identified below, no assignee data will appear on the patent. If an assignee is identified below, the document has been filed for recordation as set forth in 37 CFR 3.11. Completion of this form is NOT a substitute for filing an assignment.
(A) NAME OF ASSIGNEE (B) RESIDENCE: (CITY and STATE OR COUNTRY)

Please check the appropriate assignee category or categories (will not be printed on the patent): ☐ Individual ☐ Corporation or other private group entity ☐ Government

4a. The following fee(s) are submitted:
- ☒ Issue Fee
- ☐ Publication Fee (No small entity discount permitted)
- ☐ Advance Order - # of Copies

4b. Payment of Fee(s): **(Please first reapply any previously paid issue fee shown above)**
- ☐ A check is enclosed.
- ☒ Payment by credit card. [illegible] XXXXXXXXXXXXXX via EFS.
- ☐ The director is hereby authorized to charge the required fee(s), any deficiency, or credits any overpayment, to Deposit Account Number (enclose an extra copy of this form).

5. **Change in Entity Status** (from status indicated above)
- ☐ Applicant certifying micro entity status. See 37 CFR 1.29 — NOTE: Absent a valid certification of Micro Entity Status (see forms PTO/SB/15A and 15B), issue fee payment in the micro entity amount will not be accepted at the risk of application abandonment.
- ☒ Applicant asserting small entity status. See 37 CFR 1.27 — NOTE: If the application was previously under micro entity status, checking this box will be taken to be a notification of loss of entitlement to micro entity status.
- ☐ Applicant changing to regular undiscounted fee status. — NOTE: Checking this box will be taken to be a notification of loss of entitlement to small or micro entity status, as applicable.

NOTE: This form must be signed in accordance with 37 CFR 1.31 and 1.33. See 37 CFR 1.4 for signature requirements and certifications.

Authorized Signature /Mark D. Trenner/ Date 12/4/2017
Typed or printed name Mark D. Trenner Registration No. 43961

PTOL-85 Part B (10-13) Approved for use through 10/31/2013. OMB 0651-0033 U.S. Patent and Trademark Office; U.S. DEPARTMENT OF COMMERCE

Electronic Patent Application Fee Transmittal

Application Number:	15230435
Filing Date:	07-Aug-2016
Title of Invention:	Inflatable Paddle Board
First Named Inventor/Applicant Name:	Peter Hall
Filer:	Mark D Trenner/Lisa Ziehr
Attorney Docket Number:	3520-002-USP

Filed as Small Entity

Filing Fees for Utility under 35 USC 111(a)

Description	Fee Code	Quantity	Amount	Sub-Total in USD($)
Basic Filing:				
Pages:				
Claims:				
Miscellaneous-Filing:				
Petition:				
Patent-Appeals-and-Interference:				
Post-Allowance-and-Post-Issuance:				
UTILITY APPL ISSUE FEE	2501	1	480	480

Description	Fee Code	Quantity	Amount	Sub-Total in USD($)
Extension-of-Time:				
Miscellaneous:				
			Total in USD ($)	**480**

Electronic Acknowledgement Receipt	
EFS ID:	31114530
Application Number:	15230435
International Application Number:	
Confirmation Number:	2775
Title of Invention:	Inflatable Paddle Board
First Named Inventor/Applicant Name:	Peter Hall
Customer Number:	46317
Filer:	Mark D Trenner/Lisa Ziehr
Filer Authorized By:	Mark D Trenner
Attorney Docket Number:	3520-002-USP
Receipt Date:	04-DEC-2017
Filing Date:	07-AUG-2016
Time Stamp:	17:21:37
Application Type:	Utility under 35 USC 111(a)

Payment information:

Submitted with Payment	yes
Payment Type	CARD
Payment was successfully received in RAM	$480
RAM confirmation Number	120517INTEFSW17224500
Deposit Account	503237
Authorized User	Mark Trenner
The Director of the USPTO is hereby authorized to charge indicated fees and credit any overpayment as follows: 37 CFR 1.16 (National application filing, search, and examination fees) 37 CFR 1.17 (Patent application and reexamination processing fees)	

37 CFR 1.19 (Document supply fees)

37 CFR 1.20 (Post Issuance fees)

37 CFR 1.21 (Miscellaneous fees and charges)

File Listing:

Document Number	Document Description	File Name	File Size(Bytes)/ Message Digest	Multi Part /.zip	Pages (if appl.)
1	Issue Fee Payment (PTO-85B)	3520-002-USP-IssueFeeForm-EFS.pdf	307949 27145a4753711510 8bf3d6d4b2460a3e287bd902	no	1
Warnings:					
Information:					
2	Fee Worksheet (SB06)	fee-info.pdf	30190 771ba609dfcd4bacc1929e03fbb7ae5979b5bf99	no	2
Warnings:					
Information:					
		Total Files Size (in bytes):	338139		

This Acknowledgement Receipt evidences receipt on the noted date by the USPTO of the indicated documents, characterized by the applicant, and including page counts, where applicable. It serves as evidence of receipt similar to a Post Card, as described in MPEP 503.

New Applications Under 35 U.S.C. 111
If a new application is being filed and the application includes the necessary components for a filing date (see 37 CFR 1.53(b)-(d) and MPEP 506), a Filing Receipt (37 CFR 1.54) will be issued in due course and the date shown on this Acknowledgement Receipt will establish the filing date of the application.
National Stage of an International Application under 35 U.S.C. 371
If a timely submission to enter the national stage of an international application is compliant with the conditions of 35 U.S.C. 371 and other applicable requirements a Form PCT/DO/EO/903 indicating acceptance of the application as a national stage submission under 35 U.S.C. 371 will be issued in addition to the Filing Receipt, in due course.
New International Application Filed with the USPTO as a Receiving Office
If a new international application is being filed and the international application includes the necessary components for an international filing date (see PCT Article 11 and MPEP 1810), a Notification of the International Application Number and of the International Filing Date (Form PCT/RO/105) will be issued in due course, subject to prescriptions concerning national security, and the date shown on this Acknowledgement Receipt will establish the international filing date of the application.

PART B - FEE(S) TRANSMITTAL

Complete and send this form, together with applicable fee(s), to: Mail Mail Stop ISSUE FEE
Commissioner for Patents
P.O. Box 1450
Alexandria, Virginia 22313-1450
or Fax (571)-273-2885

INSTRUCTIONS: This form should be used for transmitting the ISSUE FEE and PUBLICATION FEE (if required). Blocks 1 through 5 should be completed where appropriate. All further correspondence including the Patent, advance orders and notification of maintenance fees will be mailed to the current correspondence address as indicated unless corrected below or directed otherwise in Block 1, by (a) specifying a new correspondence address; and/or (b) indicating a separate "FEE ADDRESS" for maintenance fee notifications.

CURRENT CORRESPONDENCE ADDRESS (Note: Use Block 1 for any change of address)

46317 2598 12/08/2017
TRENNER LAW FIRM, LLC
(Mark D. Trenner)
1153 Bergen Pkwy #j-115
Evergreen, CO 80439

OPAP AKMA-2
DEC 14 2017
PATENT & TRADEMARK OFFICE

Note: A certificate of mailing can only be used for domestic mailings of the Fee(s) Transmittal. This certificate cannot be used for any other accompanying papers. Each additional paper, such as an assignment or formal drawing, must have its own certificate of mailing or transmission.

Certificate of Mailing or Transmission
I hereby certify that this Fee(s) Transmittal is being deposited with the United States Postal Service with sufficient postage for first class mail in an envelope addressed to the Mail Stop ISSUE FEE address above, or being facsimile transmitted to the USPTO (571) 273-2885, on the date indicated below.

(Depositor's name)
(Signature)
(Date)

APPLICATION NO.	FILING DATE	FIRST NAMED INVENTOR	ATTORNEY DOCKET NO.	CONFIRMATION NO.
15/230,435	08/07/2016	Peter Hall	3520-002-USP	2775

TITLE OF INVENTION: Inflatable Paddle Board

APPLN. TYPE	ENTITY STATUS	ISSUE FEE DUE	PUBLICATION FEE DUE	PREV. PAID ISSUE FEE	TOTAL FEE(S) DUE	DATE DUE
nonprovisional	SMALL	$480	$0	$0	$480	01/03/2018

12/05/2017 INTEFSW 00004497 15238435

EXAMINER	ART UNIT	CLASS-SUBCLASS
OLSON, LARS A	3617	441-066000

01 FC:2501 480.00 OP

1. Change of correspondence address or indication of "Fee Address" (37 CFR 1.363).
☐ Change of correspondence address (or Change of Correspondence Address form PTO/SB/122) attached.
☐ "Fee Address" indication (or "Fee Address" Indication form PTO/SB/47; Rev 03-02 or more recent) attached. **Use of a Customer Number is required.**

2. For printing on the patent front page, list
(1) The names of up to 3 registered patent attorneys or agents OR, alternatively,
(2) The name of a single firm (having as a member a registered attorney or agent) and the names of up to 2 registered patent attorneys or agents. If no name is listed, no name will be printed.

1 Trenner Law Firm, LLC
2 Mark D. Trenner
3

3. ASSIGNEE NAME AND RESIDENCE DATA TO BE PRINTED ON THE PATENT (print or type)
PLEASE NOTE: Unless an assignee is identified below, no assignee data will appear on the patent. If an assignee is identified below, the document has been filed for recordation as set forth in 37 CFR 3.11. Completion of this form is NOT a substitute for filing an assignment.

(A) NAME OF ASSIGNEE: Twitch, LLC
(B) RESIDENCE: (CITY and STATE OR COUNTRY): Steamboat Springs, Colorado

Please check the appropriate assignee category or categories (will not be printed on the patent): ☐ Individual ☒ Corporation or other private group entity ☐ Government

4a. The following fee(s) are submitted:
☒ Issue Fee
☐ Publication Fee (No small entity discount permitted)
☐ Advance Order - # of Copies

4b. Payment of Fee(s): **(Please first reapply any previously paid issue fee shown above)**
☐ A check is enclosed.
☒ Payment by credit card. Form PTO-2038 is attached. XXXXXXXXXXXXX Previously paid.
☐ The director is hereby authorized to charge the required fee(s), any deficiency, or credits any overpayment, to Deposit Account Number (enclose an extra copy of this form).

5. **Change in Entity Status** (from status indicated above)
☐ Applicant certifying micro entity status. See 37 CFR 1.29
NOTE: Absent a valid certification of Micro Entity Status (see forms PTO/SB/15A and 15B), issue fee payment in the micro entity amount will not be accepted at the risk of application abandonment.
☒ Applicant asserting small entity status. See 37 CFR 1.27
NOTE: If the application was previously under micro entity status, checking this box will be taken to be a notification of loss of entitlement to micro entity status.
☐ Applicant changing to regular undiscounted fee status.
NOTE: Checking this box will be taken to be a notification of loss of entitlement to small or micro entity status, as applicable.

NOTE: This form must be signed in accordance with 37 CFR 1.31 and 1.33. See 37 CFR 1.4 for signature requirements and certifications.

Authorized Signature /Mark D. Trenner/ Date 12/14/2017
Typed or printed name Mark D. Trenner Registration No. 43961

Best Available Copy

PART B - FEE(S) TRANSMITTAL

Complete and send this form, together with applicable fee(s), to: Mail Mail Stop ISSUE FEE
Commissioner for Patents
P.O. Box 1450
Alexandria, Virginia 22313-1450
or Fax (571)-273-2885

INSTRUCTIONS: This form should be used for transmitting the ISSUE FEE and PUBLICATION FEE (if required). Blocks 1 through 5 should be completed where appropriate. All further correspondence including the Patent, advance orders and notification of maintenance fees will be mailed to the current correspondence address as indicated unless corrected below or directed otherwise in Block 1, by (a) specifying a new correspondence address; and/or (b) indicating a separate "FEE ADDRESS" for maintenance fee notifications.

CURRENT CORRESPONDENCE ADDRESS (Note: Use Block 1 for any change of address)

46317 7590 09/03/2017
TRENNER LAW FIRM, LLC
(Mark D. Trenner)
1153 Bergen Pkwy #i-115
Evergreen, CO 80439

OPAP AKIMA-2 DEC 14 2017 PATENT & TRADEMARK OFFICE

Note: A certificate of mailing can only be used for domestic mailings of the Fee(s) Transmittal. This certificate cannot be used for any other accompanying papers. Each additional paper, such as an assignment or formal drawing, must have its own certificate of mailing or transmission.

Certificate of Mailing or Transmission

I hereby certify that this Fee(s) Transmittal is being deposited with the United States Postal Service with sufficient postage for first class mail in an envelope addressed to the Mail Stop ISSUE FEE address above, or being facsimile transmitted to the USPTO (571) 273-2885, on the date indicated below.

(Depositor's name)
(Signature)
(Date)

APPLICATION NO.	FILING DATE	FIRST NAMED INVENTOR	ATTORNEY DOCKET NO.	CONFIRMATION NO.
15/230,435	08/07/2016	Peter Hall	3520-002-USP	2775

TITLE OF INVENTION: Inflatable Paddle Board

APPLN. TYPE	ENTITY STATUS	ISSUE FEE DUE	PUBLICATION FEE DUE	PREV. PAID ISSUE FEE	TOTAL FEE(S) DUE	DATE DUE
nonprovisional	SMALL	$480	$0	$0	$480	01/03/2018

EXAMINER	ART UNIT	CLASS-SUBCLASS
OLSON, LARS A	3617	441-066000

1. Change of correspondence address or indication of "Fee Address" (37 CFR 1.363).
- ☐ Change of correspondence address (or Change of Correspondence Address form PTO/SB/122) attached.
- ☐ "Fee Address" indication (or "Fee Address" Indication form PTO/SB/47; Rev 03-02 or more recent) attached. **Use of a Customer Number is required.**

2. For printing on the patent front page, list
(1) The names of up to 3 registered patent attorneys or agents OR, alternatively,
(2) The name of a single firm (having as a member a registered attorney or agent) and the names of up to 2 registered patent attorneys or agents. If no name is listed, no name will be printed.

1 Trenner Law Firm, LLC
2 Mark D. Trenner
3

3. ASSIGNEE NAME AND RESIDENCE DATA TO BE PRINTED ON THE PATENT (print or type)

PLEASE NOTE: Unless an assignee is identified below, no assignee data will appear on the patent. If an assignee is identified below, the document has been filed for recordation as set forth in 37 CFR 3.11. Completion of this form is NOT a substitute for filing an assignment.

(A) NAME OF ASSIGNEE: Twitch, LLC

(B) RESIDENCE: (CITY and STATE OR COUNTRY): Steamboat Springs, Colorado

Please check the appropriate assignee category or categories (will not be printed on the patent): ☐ Individual ☒ Corporation or other private group entity ☐ Government

4a. The following fee(s) are submitted:
- ☒ Issue Fee
- ☐ Publication Fee (No small entity discount permitted)
- ☐ Advance Order - # of Copies

4b. Payment of Fee(s): **(Please first reapply any previously paid issue fee shown above)**
- ☐ A check is enclosed.
- ☒ Payment by credit card. Form PTO-2038 attached. ~~XXXXXXXXXXXXXX~~ Previously paid.
- ☐ The director is hereby authorized to charge the required fee(s), any deficiency, or credits any overpayment, to Deposit Account Number (enclose an extra copy of this form).

5. **Change in Entity Status** (from status indicated above)
- ☐ Applicant certifying micro entity status. See 37 CFR 1.29
- ☒ Applicant asserting small entity status. See 37 CFR 1.27
- ☐ Applicant changing to regular undiscounted fee status.

NOTE: Absent a valid certification of Micro Entity Status (see forms PTO/SB/15A and 15B), issue fee payment in the micro entity amount will not be accepted at the risk of application abandonment.

NOTE: If the application was previously under micro entity status, checking this box will be taken to be a notification of loss of entitlement to micro entity status.

NOTE: Checking this box will be taken to be a notification of loss of entitlement to small or micro entity status, as applicable.

NOTE: This form must be signed in accordance with 37 CFR 1.31 and 1.33. See 37 CFR 1.4 for signature requirements and certifications.

Authorized Signature /Mark D. Trenner/ Date 12/14/2017
Typed or printed name Mark D. Trenner Registration No. 43961

PTO/SB/85 Part B (10-13) Approved for use through 10/31/2013. OMB 0651-0035 U.S. Patent and Trademark Office; U.S. DEPARTMENT OF COMMERCE

IN THE UNITED STATES PATENT AND TRADEMARK OFFICE

Application Serial No. 15/230,435
Filing Date ..... August 7, 2016
Inventorship ..... Peter Hall
Art Unit 3617
Confirmation No. 2775
Attorney's Docket No. 3520-002-USP
Title: Inflatable Paddle Board

TRANSMITTAL LETTER

To: Commissioner for Patents
P.O. Box 1450
Alexandria, VA 22313-1450

Sir:

The issue fee in this application was paid on December 4, 2017. After the issue fee form was completed and submitted, the Applicant noticed that the Assignee's name and Residence City and State was not completed. The revised issue fee form is being filed along with this letter to add the Assignee's name and Residence City and State.

The issue fee has already been paid and no additional fees are believed to be due.

If questions remain, please contact the undersigned attorney at the number shown below.

Respectfully Submitted,

/Mark D. Trenner/

Dated: December 14, 2017 By: _____

Mark D. Trenner
Reg. No. 43,961
(720) 221-3708

PART B - FEE(S) TRANSMITTAL

Complete and send this form, together with applicable fee(s), to: Mail **Mail Stop ISSUE FEE**
Commissioner for Patents
P.O. Box 1450
Alexandria, Virginia 22313-1450
or Fax (571)-273-2885

INSTRUCTIONS: This form should be used for transmitting the ISSUE FEE and PUBLICATION FEE (if required). Blocks 1 through 5 should be completed where appropriate. All further correspondence including the Patent, advance orders and notification of maintenance fees will be mailed to the current correspondence address as indicated unless corrected below or directed otherwise in Block 1, by (a) specifying a new correspondence address; and/or (b) indicating a separate "FEE ADDRESS" for maintenance fee notifications.

CURRENT CORRESPONDENCE ADDRESS (Note: Use Block 1 for any change of address)

46317 2590 09/03/2017
TRENNER LAW FIRM, LLC
(Mark D. Trenner)
1153 Bergen Pkwy #i-115
Evergreen, CO 80439

Note: A certificate of mailing can only be used for domestic mailings of the Fee(s) Transmittal. This certificate cannot be used for any other accompanying papers. Each additional paper, such as an assignment or formal drawing, must have its own certificate of mailing or transmission.

Certificate of Mailing or Transmission
I hereby certify that this Fee(s) Transmittal is being deposited with the United States Postal Service with sufficient postage for first class mail in an envelope addressed to the Mail Stop ISSUE FEE address above, or being facsimile transmitted to the USPTO (571) 273-2885, on the date indicated below.

(Depositor's name)
(Signature)
(Date)

APPLICATION NO.	FILING DATE	FIRST NAMED INVENTOR	ATTORNEY DOCKET NO.	CONFIRMATION NO.
15/230,435	08/07/2016	Peter Hall	3520-002-USP	2775

TITLE OF INVENTION: Inflatable Paddle Board

APPLN. TYPE	ENTITY STATUS	ISSUE FEE DUE	PUBLICATION FEE DUE	PREV. PAID ISSUE FEE	TOTAL FEE(S) DUE	DATE DUE
nonprovisional	SMALL	$480	$0	$0	$480	01/03/2018

EXAMINER	ART UNIT	CLASS-SUBCLASS
OLSON, LARS A	3617	441-066000

1. Change of correspondence address or indication of "Fee Address" (37 CFR 1.363).
- ☐ Change of correspondence address (or Change of Correspondence Address form PTO/SB/122) attached.
- ☐ "Fee Address" indication (or "Fee Address" Indication form PTO/SB/47; Rev 03-02 or more recent) attached. **Use of a Customer Number is required.**

2. For printing on the patent front page, list
(1) The names of up to 3 registered patent attorneys or agents OR, alternatively,
(2) The name of a single firm (having as a member a registered attorney or agent) and the names of up to 2 registered patent attorneys or agents. If no name is listed, no name will be printed.

1 Trenner Law Firm, LLC
2 Mark D. Trenner
3

3. ASSIGNEE NAME AND RESIDENCE DATA TO BE PRINTED ON THE PATENT (print or type)

PLEASE NOTE: Unless an assignee is identified below, no assignee data will appear on the patent. If an assignee is identified below, the document has been filed for recordation as set forth in 37 CFR 3.11. Completion of this form is NOT a substitute for filing an assignment.

(A) NAME OF ASSIGNEE: Twitch, LLC
(B) RESIDENCE: (CITY and STATE OR COUNTRY): Steamboat Springs, Colorado

Please check the appropriate assignee category or categories (will not be printed on the patent): ☐ Individual ☒ Corporation or other private group entity ☐ Government

4a. The following fee(s) are submitted:
- ☒ Issue Fee
- ☐ Publication Fee (No small entity discount permitted)
- ☐ Advance Order - # of Copies

4b. Payment of Fee(s): **(Please first reapply any previously paid issue fee shown above)**
- ☐ A check is enclosed.
- ☒ Payment by credit card. ~~XXXXXXXXXXXXXX~~ Previously paid.
- ☐ The director is hereby authorized to charge the required fee(s), any deficiency, or credits any overpayment, to Deposit Account Number (enclose an extra copy of this form).

5. **Change in Entity Status** (from status indicated above)
- ☐ Applicant certifying micro entity status. See 37 CFR 1.29 — NOTE: Absent a valid certification of Micro Entity Status (see forms PTO/SB/15A and 15B), issue fee payment in the micro entity amount will not be accepted at the risk of application abandonment.
- ☒ Applicant asserting small entity status. See 37 CFR 1.27 — NOTE: If the application was previously under micro entity status, checking this box will be taken to be a notification of loss of entitlement to micro entity status.
- ☐ Applicant changing to regular undiscounted fee status. — NOTE: Checking this box will be taken to be a notification of loss of entitlement to small or micro entity status, as applicable.

NOTE: This form must be signed in accordance with 37 CFR 1.31 and 1.33. See 37 CFR 1.4 for signature requirements and certifications.

Authorized Signature /Mark D. Trenner/ Date 12/14/2017
Typed or printed name Mark D. Trenner Registration No. 43961

Electronic Acknowledgement Receipt

EFS ID:	31228471
Application Number:	15230435
International Application Number:	
Confirmation Number:	2775
Title of Invention:	Inflatable Paddle Board
First Named Inventor/Applicant Name:	Peter Hall
Customer Number:	46317
Filer:	Mark D Trenner/Lisa Ziehr
Filer Authorized By:	Mark D Trenner
Attorney Docket Number:	3520-002-USP
Receipt Date:	14-DEC-2017
Filing Date:	07-AUG-2016
Time Stamp:	17:38:51
Application Type:	Utility under 35 USC 111(a)

Payment information:

Submitted with Payment	no

File Listing:

Document Number	Document Description	File Name	File Size(Bytes)/ Message Digest	Multi Part /.zip	Pages (if appl.)
1	Miscellaneous Incoming Letter	TransmittalLetter_EFS.pdf	102064 e7d3e36d248f12f5b6f6926c0758ab3851694177	no	1

Warnings:

Information:					
2	Issue Fee Payment (PTO-85B)	3520-002-USP-IssueFeeForm2-EFS.pdf	313508 407903f688443509f8287503f525baccc0386127	no	1
Warnings:					
Information:					
			Total Files Size (in bytes):	415572	

This Acknowledgement Receipt evidences receipt on the noted date by the USPTO of the indicated documents, characterized by the applicant, and including page counts, where applicable. It serves as evidence of receipt similar to a Post Card, as described in MPEP 503.

New Applications Under 35 U.S.C. 111
If a new application is being filed and the application includes the necessary components for a filing date (see 37 CFR 1.53(b)-(d) and MPEP 506), a Filing Receipt (37 CFR 1.54) will be issued in due course and the date shown on this Acknowledgement Receipt will establish the filing date of the application.
National Stage of an International Application under 35 U.S.C. 371
If a timely submission to enter the national stage of an international application is compliant with the conditions of 35 U.S.C. 371 and other applicable requirements a Form PCT/DO/EO/903 indicating acceptance of the application as a national stage submission under 35 U.S.C. 371 will be issued in addition to the Filing Receipt, in due course.
New International Application Filed with the USPTO as a Receiving Office
If a new international application is being filed and the international application includes the necessary components for an international filing date (see PCT Article 11 and MPEP 1810), a Notification of the International Application Number and of the International Filing Date (Form PCT/RO/105) will be issued in due course, subject to prescriptions concerning national security, and the date shown on this Acknowledgement Receipt will establish the international filing date of the application.

UNITED STATES PATENT AND TRADEMARK OFFICE

UNITED STATES DEPARTMENT OF COMMERCE
United States Patent and Trademark Office
Address: COMMISSIONER FOR PATENTS
P.O. Box 1450
Alexandria, Virginia 22313-1450
www.uspto.gov

APPLICATION NO.	ISSUE DATE	PATENT NO.	ATTORNEY DOCKET NO.	CONFIRMATION NO.
15/230,435	01/09/2018	9862466	3520-002-USP	2775

46317 7590 12/20/2017
Trenner Law Firm, LLC
14143 Denver West Pkwy, Ste 100-94
Golden, CO 80401

ISSUE NOTIFICATION

The projected patent number and issue date are specified above.

Determination of Patent Term Adjustment under 35 U.S.C. 154 (b)
(application filed on or after May 29, 2000)

The Patent Term Adjustment is 0 day(s). Any patent to issue from the above-identified application will include an indication of the adjustment on the front page.

If a Continued Prosecution Application (CPA) was filed in the above-identified application, the filing date that determines Patent Term Adjustment is the filing date of the most recent CPA.

Applicant will be able to obtain more detailed information by accessing the Patent Application Information Retrieval (PAIR) WEB site (http://pair.uspto.gov).

Any questions regarding the Patent Term Extension or Adjustment determination should be directed to the Office of Patent Legal Administration at (571)-272-7702. Questions relating to issue and publication fee payments should be directed to the Application Assistance Unit (AAU) of the Office of Data Management (ODM) at (571)-272-4200.

APPLICANT(s) (Please see PAIR WEB site http://pair.uspto.gov for additional applicants):

Peter Hall, Steamboat Springs, CO;
Twitch, LLC, Steamboat Springs, CO;

The United States represents the largest, most dynamic marketplace in the world and is an unparalleled location for business investment, innovation, and commercialization of new technologies. The USA offers tremendous resources and advantages for those who invest and manufacture goods here. Through SelectUSA, our nation works to encourage and facilitate business investment. To learn more about why the USA is the best country in the world to develop technology, manufacture products, and grow your business, visit SelectUSA.gov.

PATENT ASSIGNMENT COVER SHEET

Electronic Version v1.1
Stylesheet Version v1.2

EPAS ID: PAT7144666

SUBMISSION TYPE:	NEW ASSIGNMENT
NATURE OF CONVEYANCE:	SECURITY INTEREST

CONVEYING PARTY DATA

Name	Execution Date
TWITCH LLC	01/14/2022
PETER HALL	01/14/2022

RECEIVING PARTY DATA

Name:	FOUNTAINHEAD SBF LLC
Street Address:	3216 W. LAKE MARY BLVD.
City:	LAKE MARY
State/Country:	FLORIDA
Postal Code:	32746

PROPERTY NUMBERS Total: 4

Property Type	Number
Patent Number:	10479458
Patent Number:	10046836
Patent Number:	D693285
Patent Number:	9862466

CORRESPONDENCE DATA

Fax Number:

Correspondence will be sent to the e-mail address first; if that is unsuccessful, it will be sent using a fax number, if provided; if that is unsuccessful, it will be sent via US Mail.

Phone:	5613939111
Email:	matt@fogellawgroup.com
Correspondent Name:	MATTHEW GREENBERG
Address Line 1:	2500 N. MILITARY TRAIL
Address Line 2:	SUITE 200
Address Line 4:	BOCA RATON, FLORIDA 33431

NAME OF SUBMITTER:	MATTHEW GREENBERG
SIGNATURE:	/Matthew Greenberg/
DATE SIGNED:	01/27/2022
	This document serves as an Oath/Declaration (37 CFR 1.63).

Total Attachments: 9

source=Security Agreement#page1.tif
source=Security Agreement#page2.tif
source=Security Agreement#page3.tif
source=Security Agreement#page4.tif
source=Security Agreement#page5.tif
source=Security Agreement#page6.tif
source=Security Agreement#page7.tif
source=Security Agreement#page8.tif
source=Security Agreement#page9.tif

SECURITY AGREEMENT

This Security Agreement ("Agreement") is made and entered into as of January 14, 2022, by Twitch LLC, a Colorado limited liability company ("Debtor"), the address of which is 1804 13th Street, Steamboat Springs, CO 80487, and in favor of **Fountainhead SBF LLC** ("Secured Party"), the address of which is 3216 W. Lake Mary Blvd., Lake Mary, FL 32746, its successors and assigns.

RECITALS:

A. The Secured Party has made a loan to the Debtor in the amount of Four Million Two Hundred Fifteen Thousand Six Hundred and No/100 Dollars ($4,215,600.00) ("Loan") as evidenced by that certain Promissory Note of even date herewith ("Note").

B. To secure Debtor's obligations under the Note to the Secured Party, the undersigned desires to enter into this Agreement.

NOW, THEREFORE, the Debtor hereby acknowledges and agrees that the foregoing Recitals are true and correct and in consideration of the premises, the mutual covenants contained herein, and for other good and valuable consideration, the receipt and adequacy of which are hereby acknowledged, the Debtor hereby agrees as follows:

SECTION 1. GRANT OF SECURITY INTEREST

The Debtor hereby grants the Secured Party a first position lien and security interest in Exhibit "A" attached hereto and made a part hereof, and all of the following-described property (collectively, "Collateral"):

1.1 Accounts Receivable and Other Intangibles. All of the Debtor's accounts, contract rights, instruments, documents, chattel paper, general intangibles (including, but not limited to, choses in action, tax refunds, and insurance proceeds); any other obligations or indebtedness owed to the Debtor from whatever source arising; all rights of the Debtor to receive any payments in money or in kind; all guaranties of the foregoing and security therefor; all the right, title, and interest of the Debtor in and with respect to the goods, services, or other property that gave rise to or that secure any of the foregoing and insurance policies and proceeds relating thereto; all rights of the Debtor as an unpaid seller of goods and services, including, but not limited to, the rights of stoppage in transit, replevin, reclamation, and resale; and all of the foregoing, whether or not now owned or hereafter created or acquired.

1.2 Inventory. All goods, merchandise, and other personal property now owned or hereafter acquired by the Debtor that are held for sale or lease, or are furnished to or to be furnished under any contract of services or are raw materials, work-in- process, supplies, or materials used or consumed in the Debtor's business, and all products thereof, and all substitutions, replacements, additions, or accessions therefor or thereto.

1.3 Machinery, Equipment, and Furniture. All machinery and equipment and furniture and fixtures now owned, or hereafter acquired, by the Debtor and used or acquired for use in the business of the Debtor, together with all accessions thereto and all substitutions and replacements thereof and parts therefore.

1.4 Proceeds. All cash and noncash proceeds of the foregoing, including, but not limited to, insurance proceeds, cash, checks, monies on deposit in any bank or banks, and accounts receivable; provided that this provision shall not be construed as a waiver of any restriction contained in this Security Agreement against alienating or encumbering the Collateral.

1.5 Intellectual Property; Contracts and Agreements; Documents and Similar Items. Any and all of

BOTE EXHIBIT 1002, PAGE 116
IPR2024-00892

Debtor's intellectual property and other intangible rights including, but not limited to, websites and website content; URL's; social networking and marketing content, links and rights; and all data regarding same. Any and all contracts and agreements to which Debtor is a party. Any and all telephone and facsimile numbers used by Debtor and/or any of its officers, employees, and/or principals in connection with Debtor's business. Any and all ledger sheets, files, records, documents, and instruments (including, but not limited to computer programs, tapes, disks, diskettes, and related electronic processing software) evidencing an interest in or relating to any or all of the above.

SECTION 2. OBLIGATIONS SECURED

The obligations secured by this Security Agreement are:

2.1 Promissory Note. Timely payment of principal and interest, and all other amounts, due under the Note.

2.2 Other Covenants and Conditions. Performance or observance by the Debtor of the other covenants and conditions of the Note, this Security Agreement, and/or all other documents evidencing the Loan (collectively, "Loan Documents").

2.3 Other Obligations. Any other indebtedness, liability, or obligation of the Debtor to the Secured Party, however arising, whether now existing or hereafter arising, due or not due, absolute or contingent, liquidated or unliquidated, including indebtedness, liabilities, and obligations on which the Debtor is jointly liable with other parties.

2.4 Expenses of Secured Party. All expenses incurred or paid by the Secured Party for purposes of conserving and protecting the Collateral including, but not limited to, reasonable attorney's fees and other legal expenses incurred in connection with retaking, holding, preparing for sale, and selling the Collateral.

2.5 Legal Expenses. Reasonable attorney's fees and other expenses incurred by the Secured Party in any and all legal proceedings, through all pre-trial, trial, appellate and post-judgement proceedings, brought to enforce and/or to collect any obligation secured by the Note, this Security Agreement, and/or all other Loan Documents, or to enforce any term or provision of the Note, this Security Agreement, and/or all other Loan Documents including, without limitation, any legal proceeding brought to foreclose or otherwise realize upon the Collateral.

SECTION 3. DEBTOR'S REPRESENTATIONS AND WARRANTIES

The Debtor represents and warrants to the Secured Party that:

3.1 Organization. Twitch LLC is a limited liability company organized, validly existing, and in good standing under the laws of the State of Colorado with all powers necessary to own its assets and property and to carry on its business as now owned and conducted.

3.2 Authority. The Debtor has full power and authority to execute and deliver this Security Agreement, to perform the Debtor's obligations under this Security Agreement, and the execution and delivery of this Agreement has been duly authorized and approved by the Debtor's board of directors. This Security Agreement will not result in or constitute a default or an event that, with notice or lapse of time or both, would be a default, breach, or violation of the Debtor in any agreement, lease, license, promissory note, conditional sales contract, commitment, indenture, mortgage, deed of trust, or other instrument or arrangement to which the Debtor is a party or by which the Debtor, or any of the Collateral, is bound.

3.3 Ownership of Collateral. Debtor is the sole owner of the Collateral, free and clear of any and all liens or encumbrances, and will defend the same against all claims and demands of all persons whomsoever.

BOTE EXHIBIT 1002, PAGE 117
IPR2024-00892

SECTION 4. DEBTOR'S RIGHTS AND COVENANTS

4.1 Possession of Collateral. Until there is a default under the terms of this Security Agreement, the Debtor may retain possession of the Collateral and may use the Collateral in a manner not inconsistent with this Security Agreement.

4.2 No Disposition of Collateral. Except for its inventory, which the Debtor may sell, lease, or otherwise transfer in the ordinary course of the Debtor's business, the Debtor shall not sell, transfer, lease, or otherwise dispose of the Collateral.

4.3 Use of Collateral. The Debtor shall keep the Collateral in good order and repair and shall protect the Collateral from waste, loss, or damage. The Debtor shall not cause or permit the Collateral to be attached or affixed to real estate in such manner that it will become a fixture. Debtor shall not use or permit the use of the Collateral in violation of any applicable law, statute, ordinance, or regulation. Except for the sale of inventory and the use of equipment in the ordinary course of the Debtor's business, the Debtor shall not remove any collateral from the address set forth below for the giving of notices to the Debtor.

4.4 Liens, Encumbrances, and Taxes. The Debtor shall keep the Collateral free and clear of any and all liens and encumbrances, excepting only the lien created by this Security Agreement. The Debtor shall pay when due all taxes, fees, or assessments imposed upon or with respect to the Collateral.

4.5 Records and Inspection. The Debtor shall at all times maintain complete and accurate records of the Debtor's business, specifically including Debtor's accounts receivable and contract rights, in accordance with generally accepted accounting procedures and practices. The Secured Party, and the Secured Party's agents or representatives, shall have the right to inspect and audit the Debtor's books and records at all reasonable times. The Secured Party, and the Secured Party's agents or representatives, shall also have the right to come upon Debtor's place of business for the purpose of inspecting or examining the Collateral or to take a physical inventory of the Debtor's inventory and stock of merchandise.

4.6 Insurance. The Debtor shall keep the Collateral insured against fire or other casualty in an amount equal to its full insurable value with loss payable to the Secured Party and the Debtor as their interests may appear at the time of loss, with priority in payment to the Secured Party. Such insurance shall be obtained under policies that are not subject to cancellation or modification by the insurer without at least 10 days' prior written notice to the Secured Party. The Debtor shall furnish the Secured Party with such evidence of the Debtor's compliance with this Section 4.6 as the Secured Party may, from time to time, reasonably require.

4.7 Additional Covenants. Debtor shall promptly execute and deliver all further instruments and documents, and take all further action, that may be reasonably necessary (including under any applicable law and, in any event, under the UCC, or that Secured Party may reasonably request, in order to create, perfect, establish and preserve the validity, perfection and priority of the liens granted by this Security Agreement in any and all of the Collateral, protect the collateral assignment and security interest granted or intended to be granted hereby, or to enable Secured Party to exercise and enforce its rights, powers, privileges and remedies hereunder with respect to any Collateral. Debtor shall not take any action that would impair in any material manner the enforceability of Secured Party's security interest in and lien on any Collateral. Debtor shall maintain and preserve its legal existence, its rights to transact business and all other rights, franchises and privileges necessary or desirable in the normal course of its business and operations.

SECTION 5. DEFAULT

Time is of the essence of this Security Agreement. Any of the following shall constitute a default under this Security Agreement:

BOTE EXHIBIT 1002, PAGE 118
IPR2024-00892

5.1 Payment Defaults. The Debtor shall fail to pay when due any installment of principal or interest on any obligation of Debtor pursuant to the Note, this Security Agreement, and/or any of the other Loan Documents.

5.2 Other Defaults. The Debtor shall fail to observe or perform any covenant, agreement, or provision contained in the Note, this Security Agreement, and/or any of the other Loan Documents to be performed by the Debtor (other than payment of the obligations secured).

5.3 Representations and Warranties. Any representation or warranty made by the Debtor in this Security Agreement proves to have been untrue in any material respect as of the date when made or furnished.

5.4 Loss of or Damage to Collateral. Collateral with a book value of $5,000.00 or more, as determined from the Debtor's books, is lost, destroyed, stolen, or substantially damaged, and such loss, destruction, theft, or damage is not covered by insurance. Any material impairment in the value of the Collateral or the priority of Secured Party's lien hereunder.

5.5 Financial Distress. The Debtor shall (a) discontinue business; (b) make a general assignment for the benefit or creditors; (c) apply for or consent to the appointment of a receiver, a trustee, or liquidator of the Debtor or of all or a substantial part of the Debtor's assets; (d) be adjudicated a bankrupt or insolvent; (e) voluntary or involuntarily, file a petition in bankruptcy or file a petition or answer seeking reorganization or an arrangement with creditors or seeking to take advantage of any other law (whether federal or state) relating to relief of debtors, or admit (by answer by default or otherwise) the material allegations of a petition filed against it in any bankruptcy, reorganization, arrangement, insolvency, or other proceeding (whether federal or state) relating to relief or debtors. There shall have been entered any judgment, decree, or order entered by a court of competent jurisdiction that approves a petition seeking reorganization of the Debtor, appoints a receiver, trustee, or liquidator of the Debtor or of all or a substantial part of the Debtor's assets, or takes any other action that in the opinion of the Secured Party would jeopardize the security interest created by this Security Agreement. The Debtor takes or omits to take any action for the purpose or with the result of effecting or permitting any of the circumstances described in this *Section 5.5.*

5.6 Foreclosure Suit. Commencement of a foreclosure action or proceeding by any third party against the Collateral, or any portion thereof, if the Secured Party reasonably determines that such action or proceeding would jeopardize the security interest created by this Security Agreement.

SECTION 6. RIGHTS OF SECURED PARTY

6.1 Acceleration and Remedies. Upon default by the Debtor, the Secured Party may, at the option of Secured Party, declare the unpaid balances of all indebtedness owed by the Debtor to the Secured Party immediately due and payable, and the Secured Party shall have and may exercise each and all of the remedies granted to the Secured Party by the Uniform Commercial Code, together with any other remedies which may be available to Secured Party under this Security Agreement or by applicable law.

6.2 Accounts Receivable. Following default by the Debtor, or any time before default when the Secured Party reasonably deems the Secured Party to be insecure, the Secured Party notify any account debtor or obligor of Debtor to make payment to the Secured Party. The Debtor hereby authorizes the Secured Party to endorse any checks, drafts, or other instruments received by the Secured Party as the act and deed of the Debtor. At the request of the Secured Party at any time after the Secured Party is entitled to notify account debtors, the Debtor shall deliver to the Secured Party all original documents evidencing the sale and delivery of merchandise or services performed which created any of the accounts receivable that are part of the Collateral, including original contracts, orders, invoices, bills of lading, warehouse receipts, and shipping receipts. The Debtor shall also deliver to Secured Party all security or guarantees held by the Debtor with respect to such accounts receivable.

6.3 Documents. Following default by the Debtor, or any time before default when the Secured Party reasonably deems the Secured Party to be insecure, the Secured Party may require the Debtor to deliver to the Secured Party all original documents, drafts, acceptances, notes, securities, instruments, and chattel paper that constitutes part of the Collateral.

6.4 Payment of Debtor's Obligations. If the Debtor fails to insure the collateral as required under the terms of this Security Agreement, or if the Debtor fails to pay any premium for such insurance, or fails to pay any tax, fee, or assessment imposed upon or with respect to the Collateral, or fails to pay any debt or obligation giving rise to any lien or encumbrance on the Collateral, Secured Party may pay the same, whether before or after default by the Debtor. All such amounts paid by the Secured Party shall constitute an obligation of the Debtor to the Secured Party, shall be payable upon demand, shall bear interest at the highest rate permitted by law, and shall be secured by this Security Agreement.

6.5 Assembling the Collateral. In exercising its rights following default by the Debtor, the Secured Party may require the Debtor to assemble the Collateral and make the Collateral available to the Secured Party at a place to be designated by the Secured Party that is reasonably convenient to both parties.

6.6 Notice. Unless the Collateral is perishable or threatens to decline speedily in value or is of the type customarily sold on a recognized market, the Secured Party shall give the Debtor reasonable notice of the time and place of any public sale or of the time after which any private sale or other disposition of the Collateral is to be made. For this purpose, notice given at least 10 days before the time of the sale or other disposition shall be conclusively presumed to be reasonable (provided that setting forth of this one commercially reasonable method of disposing of the collateral is not intended to limit its disposition to that method only).

6.7 Sale of Collateral. In connection with any sale of the Collateral, the Debtor agrees that it is commercially reasonable to sell the Collateral at public or private sale as one lot or in several lots and at prices that are substantially lower than those for which the Collateral would sell in the ordinary course of retail sales. A public sale in the following fashion shall be conclusively presumed to be reasonable:

6.7.1 Location. The sale shall be held in the county of the Debtor's principal place of business or the county in which the Collateral, or any part of the Collateral, is located.

6.7.2 Auction. The sale shall be by auction, but the sale does not need to be conducted by a professional auctioneer.

6.7.3 Terms of Sale. The terms of sale shall require that payment be made at the time of the sale in cash or by cashier's check.

6.7.4 Sale as Is. The Collateral shall be sold "as is" and without any preparation for sale.

6.7.5 Bids by Secured Party. The Secured Party may bid on all or any portion of the Collateral.

6.8 Other Disposition. Secured Party shall be under no obligation to sell the Collateral and is under no obligation to complete a sale of the Collateral if, in the reasonable business judgment of the Secured Party, none of the offers received reasonably approximates the fair value of the Collateral. If the Secured Party elects not to sell the Collateral, the Secured Party may elect to follow the procedures set forth in the Uniform Commercial Code for retaining the Collateral in satisfaction of the obligations secured by this Security Agreement, subject to the Debtor's rights under such procedures.

6.9 Receiver. In addition to the other rights granted under this Security Agreement, the Secured Party shall, in the event of a default by the Debtor, be entitled to the appointment of a receiver, at Debtor's expense,

BOTE EXHIBIT 1002, PAGE 120
IPR2024-00892

for the operation, maintenance, use, sale, lease, application and/or collection of the Collateral, or any portion thereof, as a matter of right regardless of whether the apparent value of the Collateral (to the extent such receiver shall control or otherwise use it) exceeds the outstanding principal amount of the obligations secured by this Security Agreement. Any receiver appointed may serve without bond. Any receiver's employment by Secured Party shall not disqualify such person or entity from serving as the receiver.

6.10 Marshalling. The Secured Party shall not be required to marshal security and may proceed to foreclose or otherwise realize upon the Collateral and any other security for the obligations secured by this Security Agreement in such order and in such manner as the Secured Party may determine in the Secured Party's sole discretion.

SECTION 7. FINANCING STATEMENTS

Debtor hereby authorizes Secured Party to, from time to time and at Debtor's expense, file one or more financing statements pursuant to the Uniform Commercial Code (including all amendments thereto) in order to perfect the Secured Party's security interest under this Security Agreement. In addition, promptly upon the request of Secured Party, Debtor shall execute any and all documents Secured Party deems necessary to perfect the Secured Party's security interest under this Security Agreement. Secured Party may also file this Security Agreement as a financing statement.

SECTION 8. ASSIGNMENT OF SECURED PARTY'S INTEREST

The Secured Party shall have the right to assign the Secured Party's interest in this Security Agreement and the security interest created under this Security Agreement. If such an assignment is made, the Debtor agrees not assert any claim that the Debtor may now have or hereafter acquire against the Secured Party by way of defense, counterclaim, setoff, cross complaint, or otherwise in any legal proceeding against the Debtor initiated by the assignee of the Secured Party's interest.

SECTION 9. MISCELLANEOUS PROVISIONS

9.1 Binding Effect. The provisions of this Agreement shall be binding upon and inure to the benefit of the heirs, personal representatives, successors, and assigns of the parties; provided that this provision shall not be construed as a waiver of any restriction contained in this Security Agreement against alienating or encumbering the Collateral. If more than one person is named in this Security Agreement as the Debtor, each of such persons shall be jointly and severally liable for the obligations of the Debtor under this Agreement.

9.2 Continuing Obligation. This Agreement shall create a continuing security interest in the Collateral which shall remain in effect until terminated in accordance with the terms and condition hereof. If, after the payment of any and all amounts due under the Note, the Debtor becomes liable to the Secured Party with respect to any new obligations, this Security Agreement shall immediately become effective with respect to any and all such new obligations then in existence and thereafter created without the necessity of any further act, agreement or writing by any party hereto, the intent being that the Security Agreement shall be a continuing obligation of the Debtor.

9.3 Notice. Any notice or other communication required or permitted to be given under this Agreement or the Uniform Commercial Code shall be in writing and shall be mailed by certified mail, return receipt requested, postage prepaid, or sent by nationally recognized overnight courier, and delivered to the parties at the addresses provided above. All notices and other communications shall be deemed to be given at the expiration of three (3) days after the date of mailing. The address of a party to which notices or other communications shall be mailed may be changed from time to time by giving written notice to the other party.

9.4 Applicable Law. This Security Agreement shall be governed by and shall be construed in accordance with the laws of the state of Colorado, and venue for any and all actions or proceedings pursuant

hereto shall be Routt County, Colorado.

9.5 No Waiver. No waiver of any provision of this Security Agreement or any obligation secured by this Security Agreement shall be deemed, or shall constitute, a waiver of any other provision, whether or not similar, nor shall any waiver constitute a continuing waiver. No waiver shall be binding unless executed in writing by the party making the waiver.

9.6 Litigation Expense. If any legal proceeding is commenced for the purpose of interpreting or enforcing any provision of this Security Agreement, or for the purpose of collecting any obligation secured by this Security Agreement, the Secured Party shall be entitled to recover any and all costs and expenses incurred in connection therewith including, without limitation, attorneys' fees and costs through pre-trial, trial, appellate and post-judgement proceedings, to be set by the court without the necessity of hearing testimony or receiving evidence, in addition to the costs and disbursements allowed by law. In addition, the Secured Party shall be entitled to recover attorney's fees and legal expenses incurred by the Secured Party in connection with retaking, holding, preparing for sale, and selling the Collateral.

9.7 Certain Waivers. Debtor waives, to the fullest extent permitted by law: (i) any right of redemption with respect to the Collateral and all rights, if any, of marshalling of the Collateral; (ii) any right to require Secured Party (A) to proceed against any person or entity, (B) to exhaust any other collateral or security for any of the Obligations, (C) to pursue any remedy in Secured Party's power, or (D) to make or give any presentments, demands for performance, notices of nonperformance, protests, notices of protests or notices of dishonor in connection with any of the Collateral; (iii) all claims, damages, and demands against Secured Party arising out of the repossession, retention, sale or application of the proceeds of any sale of the Collateral; (iv) all rights to assert the bankruptcy or insolvency of Debtor as a defense hereunder or as the basis for rescission hereof; (v) all rights under any law purporting to reduce Debtor's obligations hereunder if the Obligations are reduced (other than as a result of payment of Debtor's Loan obligations); (vi) all defenses based on the disability or lack of authority of Debtor or any person, the repudiation of the Solar Agreement by Debtor or any person, the failure by Secured Party to enforce any claim against Debtor, or the unenforceability in whole or in part of this Security Agreement or the Solar Agreement; and (vii) all suretyship and guarantor's defenses generally.

9.8 Reinstatement. This Security Agreement and the obligations of Debtor hereunder shall automatically be reinstated if and to the extent that for any reason any payment made pursuant to this Security Agreement or the Solar Agreement, is rescinded or must otherwise be restored or returned by Secured Party to Debtor, whether as a result of any proceedings in insolvency, bankruptcy, liquidation or reorganization or otherwise with respect to Debtor or any other person party to the Solar Agreement or as a result of any settlement or compromise with any person (including Debtor) in respect of such payment, or upon dissolution of, or appointment of any intervenor, conservator of, or trustee or similar official for, Debtor or any other person party to the Solar Agreement or any substantial part of Debtor's or any other such person's assets, or otherwise, all as though such payments had not been made.

*9.10 **WAIVER OF JURY TRIAL.*** **THE PARTIES HERETO MUTUALLY AND WILLINGLY WAIVE THE RIGHT TO A TRIAL BY JURY OF ANY AND ALL CLAIMS MADE BETWEEN THEM WHETHER NOW EXISTING OR ARISING IN THE FUTURE BY VIRTUE OF THIS AGREEMENT INCLUDING, WITHOUT LIMITATION, ANY AND ALL CLAIMS, DEFENSES, COUNTERCLAIMS, CROSS-CLAIMS, THIRD PARTY CLAIMS AND INTERVENOR'S CLAIMS ARISING FROM OR RELATED TO THE NEGOTIATION, CONSUMMATION, EXECUTION OR PERFORMANCE UNDER THIS AGREEMENT.**

9.11 *United States Small Business Administration.* The Loan secured by this lien was made under a United States Small Business Administration (SBA) nationwide program which uses tax dollars to assist small business owners. If the United States is seeking to enforce this document, then under SBA regulations:

(a) When SBA is the holder of the Note, this document and all documents evidencing or securing this Loan will be construed in accordance with federal law.

(b) SBA may use local or state procedures for purposes such as filing papers, recording documents, giving notice, foreclosing liens, and other purposes. By using these procedures, SBA does not waive any federal immunity from local or state control, penalty, tax or liability. No Borrower or Guarantor may claim or assert against SBA any local or state law to deny any obligation of Borrower, or defeat any claim of SBA with respect to this Loan.

Any clause in this document requiring arbitration is not enforceable when SBA is the holder of the Note secured by this instrument.

If any interest in the Collateral is sold or transferred without the prior written consent of SBA, SBA may, if it so chooses, require immediate payment in full of all sums secured by this instrument.

The Debtor has executed this Agreement the day and year first written above.

DEBTOR:

Twitch LLC, a Colorado limited liability company

By: _____
Peter Hall, Manager

_____
Peter Hall, individually

Exhibit "A"

- 2016 GMC Savana; VIN #1GD37TCG1G1121431
- 2016 Ford 25; VIN #1FTYR3XM1GKA78885
- 2015 Ford TRN; VIN #1FTYR3XG4FKA37871
- 2014 Ford F150; VIN #1FTFW1ET3EKF37930
- 2014 Dodge Pro; VIN #3C6TRVDG1EE104669
- U.S. patent number US-9862466B2-20180109 issued to Twitch, LLC
- U.S. patent number US-10046836B2-20180814 issued to Twitch, LLC
- U.S. patent number US-10479458B2-20191119 issued to Twitch, LLC
- U.S. patent number US-D693285S-20131112 issued to Peter Hall