US009264301B1

(12) **United States Patent**
Chua et al.

(10) **Patent No.: US 9,264,301 B1**
(45) **Date of Patent: *Feb. 16, 2016**

(54) **HIGH AVAILABILITY FOR SOFTWARE DEFINED NETWORKS**

(71) Applicant: **Wiretap Ventures, LLC**, Santa Clara, CA (US)

(72) Inventors: **Roy Liang Chua**, Saratoga, CA (US); **Matthew Palmer**, Menlo Park, CA (US); **Andrew Keith Pearce**, San Francisco, CA (US); **David Warren Hawley**, Belmont, CA (US)

(73) Assignee: **Wiretap Ventures, LLC**, Santa Clara, CA (US)

(*) Notice: Subject to any disclaimer, the term of this patent is extended or adjusted under 35 U.S.C. 154(b) by 38 days.

This patent is subject to a terminal disclaimer.

(21) Appl. No.: **13/841,968**

(22) Filed: **Mar. 15, 2013**

Related U.S. Application Data

(60) Provisional application No. 61/703,692, filed on Sep. 20, 2012.

(51) **Int. Cl.**
G01R 31/08 (2006.01)
H04L 12/24 (2006.01)
H04L 12/701 (2013.01)

(52) **U.S. Cl.**
CPC ***H04L 41/0668*** (2013.01); ***H04L 45/00*** (2013.01)

(58) **Field of Classification Search**
USPC 370/252, 254, 238; 709/220, 221; 714/4.2, E11.008
See application file for complete search history.

(56) **References Cited**

U.S. PATENT DOCUMENTS

6,954,775	B1	10/2005	Shanklin et al.	
7,024,600	B2	4/2006	Manley et al.	
7,342,890	B1 *	3/2008	Ferguson	370/238
7,519,294	B2 *	4/2009	Bullock	398/59
7,607,049	B2	10/2009	Yasuie et al.	
7,796,601	B1	9/2010	Norman	
7,801,031	B2 *	9/2010	Chao et al.	370/228
7,813,263	B2 *	10/2010	Chang et al.	370/216
7,969,862	B1 *	6/2011	Wang et al.	370/216
8,369,213	B2 *	2/2013	Vasseur et al.	370/228
8,396,950	B1	3/2013	Sandick et al.	
8,619,546	B2	12/2013	Nandagopal et al.	
8,755,389	B1	6/2014	Poutievski et al.	
8,755,893	B2 *	6/2014	Gross et al.	607/46
8,811,212	B2 *	8/2014	Beheshti-Zavareh et al.	370/252
2001/0045914	A1	11/2001	Bunker	
2002/0152320	A1 *	10/2002	Lau	709/238

(Continued)

OTHER PUBLICATIONS

U.S. Appl. No. 13/842,067, by Matthew Palmer, filed Mar. 15, 2013.

(Continued)

Primary Examiner — Phuongchau Ba Nguyen
(74) *Attorney, Agent, or Firm* — Pillsbury Winthrop Shaw Pittman LLP

(57) **ABSTRACT**

In one example, a controller device for a software defined network (SDN) includes one or more network interfaces configured to communicate with network devices of the SDN, and one or more processors configured to determine a primary path for network traffic between network devices of the SDN, determine a backup path to the primary path for the network traffic between the network devices of the SDN, and, in response to a failover event, configure the network devices to switch from the primary path to the backup path.

20 Claims, 9 Drawing Sheets

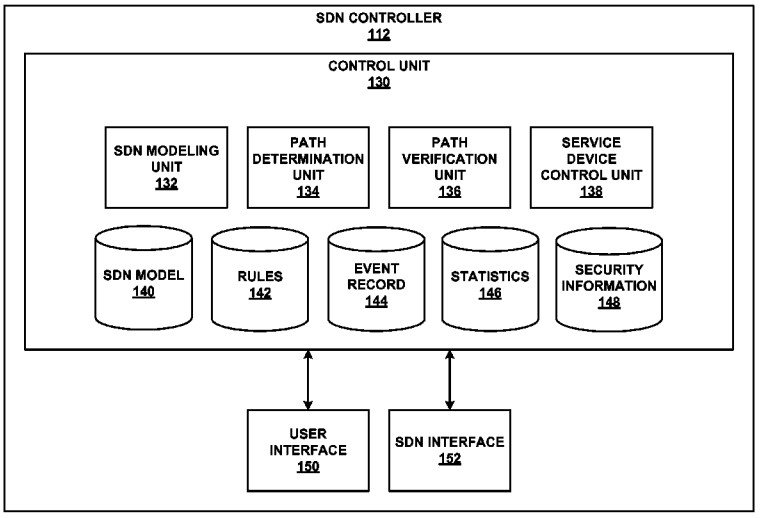

(56) **References Cited**

U.S. PATENT DOCUMENTS

2004/0039827	A1	2/2004	Thomas	
2005/0138111	A1	6/2005	Aton et al.	
2005/0265228	A1*	12/2005	Fredette et al.	370/216
2006/0092857	A1	5/2006	Ansari et al.	
2007/0005740	A1	1/2007	DiFalco et al.	
2007/0088845	A1	4/2007	Memon et al.	
2007/0115967	A1	5/2007	Vandenberghe	
2007/0220175	A1*	9/2007	Khanna et al.	709/251
2008/0062871	A1	3/2008	Grayson	
2008/0219156	A1*	9/2008	Caviglia et al.	370/228
2008/0232347	A1*	9/2008	Chao et al.	370/351
2009/0201803	A1*	8/2009	Filsfils et al.	370/222
2009/0249115	A1*	10/2009	Bycroft et al.	714/4
2010/0054122	A1*	3/2010	Taylor et al.	370/225
2010/0266279	A1*	10/2010	Sadananda	398/48
2010/0293043	A1*	11/2010	Atreya et al.	705/14.4
2011/0196953	A1	8/2011	Samaha	
2011/0264795	A1	10/2011	Koide et al.	
2011/0286324	A1	11/2011	Bellagamba et al.	
2012/0044801	A1*	2/2012	Vasseur et al.	370/217
2012/0176890	A1*	7/2012	Balus et al.	370/218
2012/0195186	A1*	8/2012	Singh et al.	370/217
2012/0227091	A1	9/2012	Smith	
2012/0287791	A1	11/2012	Xi et al.	
2013/0010600	A1	1/2013	Jocha et al.	
2013/0028070	A1*	1/2013	Beheshti-Zavareh et al.	370/217
2013/0028073	A1*	1/2013	Tatipamula et al.	370/218
2013/0044636	A1	2/2013	Koponen	
2013/0058208	A1	3/2013	Pfaff et al.	
2013/0163475	A1	6/2013	Beliveau et al.	
2013/0173810	A1	7/2013	Subramaniam	
2013/0223442	A1	8/2013	Narayanan et al.	
2013/0275552	A1	10/2013	Dhesikan et al.	
2013/0283374	A1	10/2013	Zisapel et al.	
2013/0286893	A1*	10/2013	Zhu et al.	370/254
2013/0329601	A1*	12/2013	Yin et al.	370/254
2013/0332982	A1	12/2013	Rao et al.	
2013/0333029	A1	12/2013	Chesla et al.	
2014/0003232	A1	1/2014	Guichard et al.	
2014/0020072	A1	1/2014	Thomas	
2014/0052830	A1	2/2014	Bigall et al.	
2014/0052836	A1	2/2014	Nguyen et al.	
2014/0169158	A1*	6/2014	Mishra et al.	370/228
2014/0195666	A1	7/2014	Dumitriu et al.	
2015/0023210	A1	1/2015	Kis	

OTHER PUBLICATIONS

U.S. Appl. No. 13/842,064, by Matthew Palmer, filed Mar. 15, 2013.
U.S. Appl. No. 13/842,192, by Matthew Palmer, filed Mar. 15, 2013.
U.S. Appl. No. 13/842,186, by Matthew Palmer, filed Mar. 15, 2013.
U.S. Appl. No. 13/842,264, by Matthew Palmer, filed Mar. 15, 2013.
McKeown et al., "OpenFlow: Enabling Innovation in Campus Networks," Computer Communication Review, ACM SIGCOMM, vol. 38(2), Apr. 2008, 6 pp.
U.S. Appl. No. 61/625,872, by Yehuda Zisapel, filed Apr. 18, 2012.

* cited by examiner

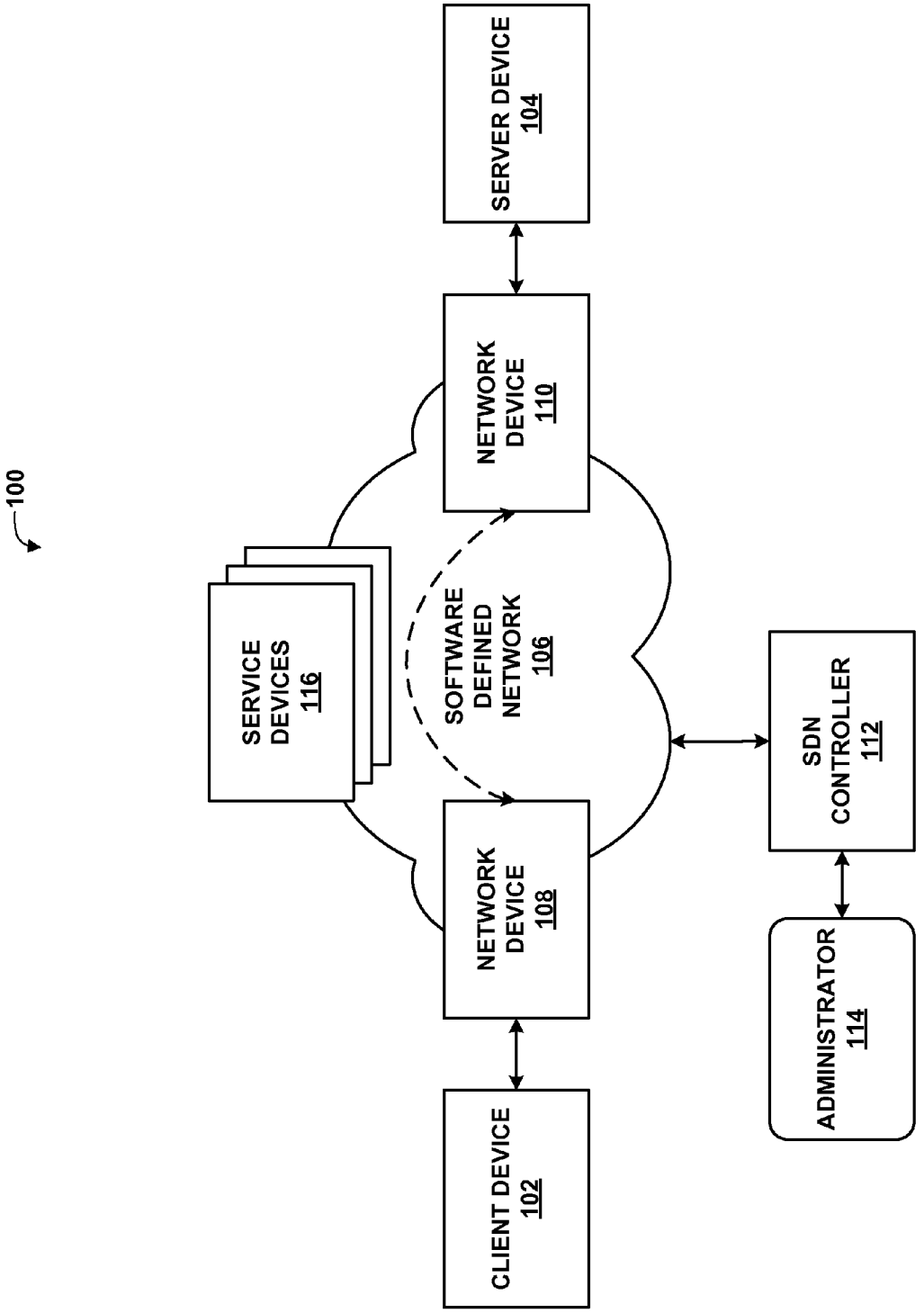
100
SERVICE DEVICES 116
CLIENT DEVICE 102
NETWORK DEVICE 108
SOFTWARE DEFINED NETWORK 106
NETWORK DEVICE 110
SERVER DEVICE 104
SDN CONTROLLER 112
ADMINISTRATOR 114

FIG. 1

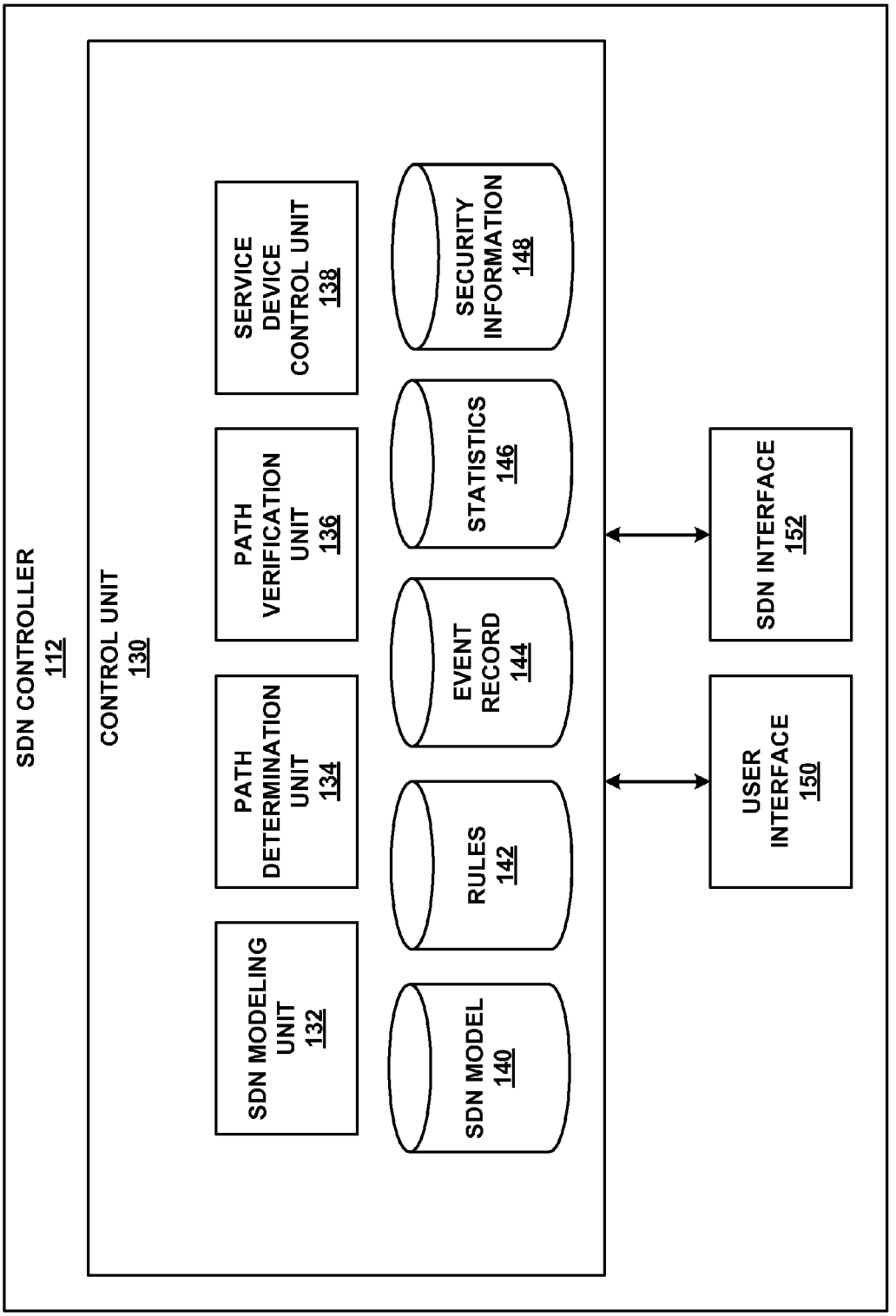
SDN CONTROLLER
112
CONTROL UNIT
130
SDN MODELING UNIT
132
PATH DETERMINATION UNIT
134
PATH VERIFICATION UNIT
136
SERVICE DEVICE CONTROL UNIT
138
SDN MODEL
140
RULES
142
EVENT RECORD
144
STATISTICS
146
SECURITY INFORMATION
148
USER INTERFACE
150
SDN INTERFACE
152

FIG. 2

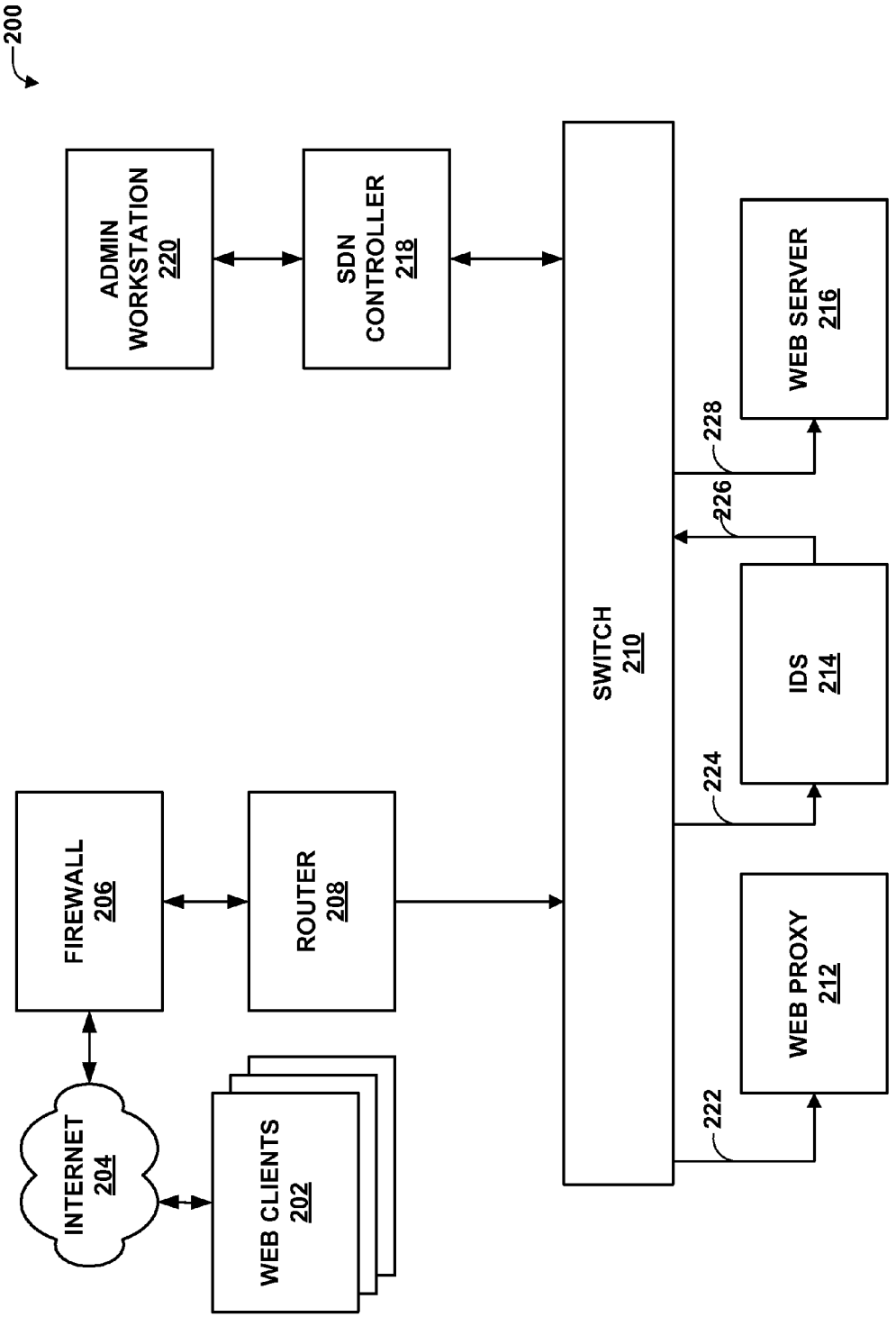
200
ADMIN WORKSTATION 220
SDN CONTROLLER 218
SWITCH 210
WEB SERVER 216
228
226
IDS 214
224
WEB PROXY 212
222
FIREWALL 206
ROUTER 208
INTERNET 204
WEB CLIENTS 202

FIG. 3

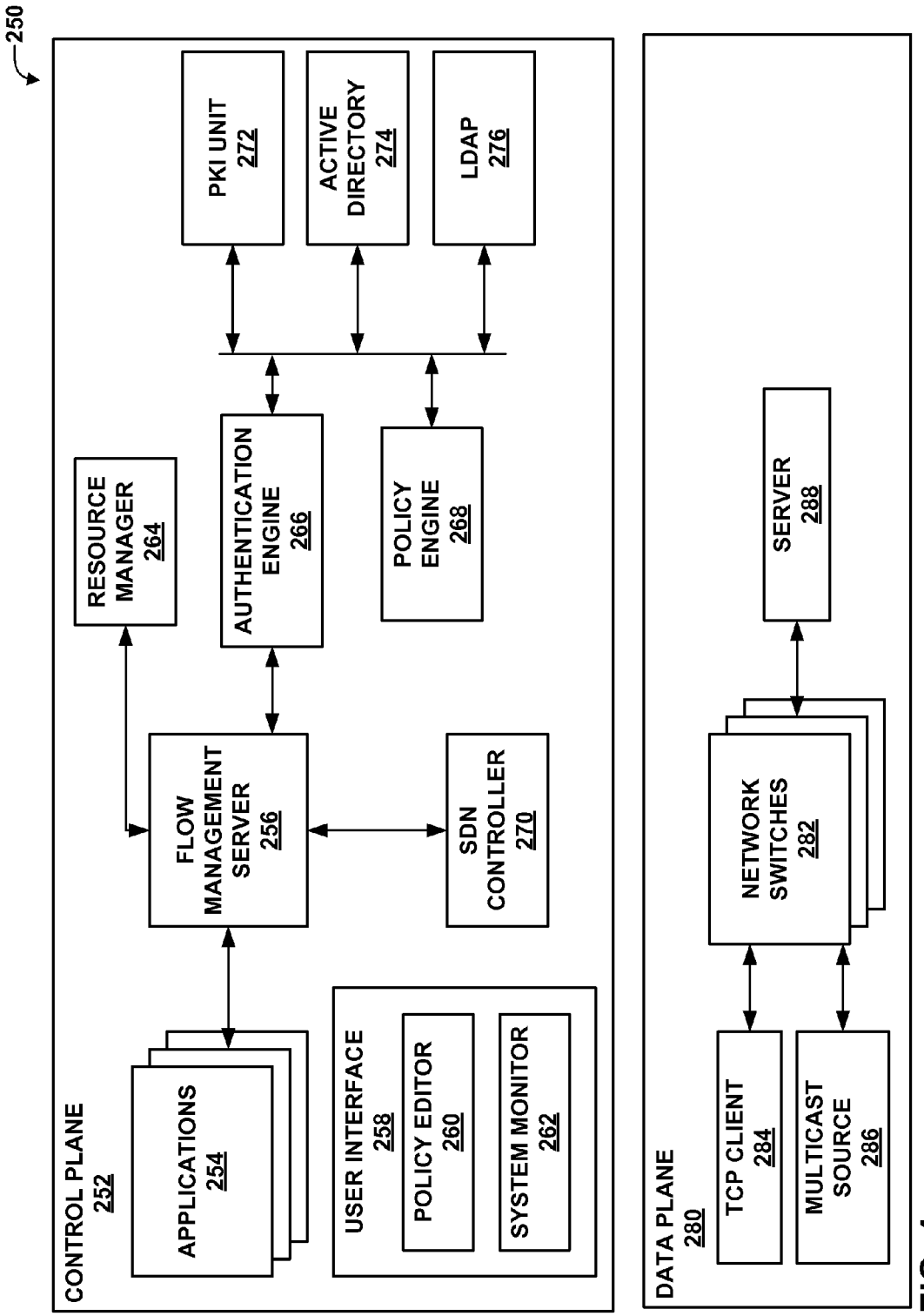
250
CONTROL PLANE
252
APPLICATIONS
254
RESOURCE MANAGER
264
FLOW MANAGEMENT SERVER
256
AUTHENTICATION ENGINE
266
PKI UNIT
272
ACTIVE DIRECTORY
274
LDAP
276
POLICY ENGINE
268
SDN CONTROLLER
270
USER INTERFACE
258
POLICY EDITOR
260
SYSTEM MONITOR
262
DATA PLANE
280
TCP CLIENT
284
MULTICAST SOURCE
286
NETWORK SWITCHES
282
SERVER
288

FIG. 4

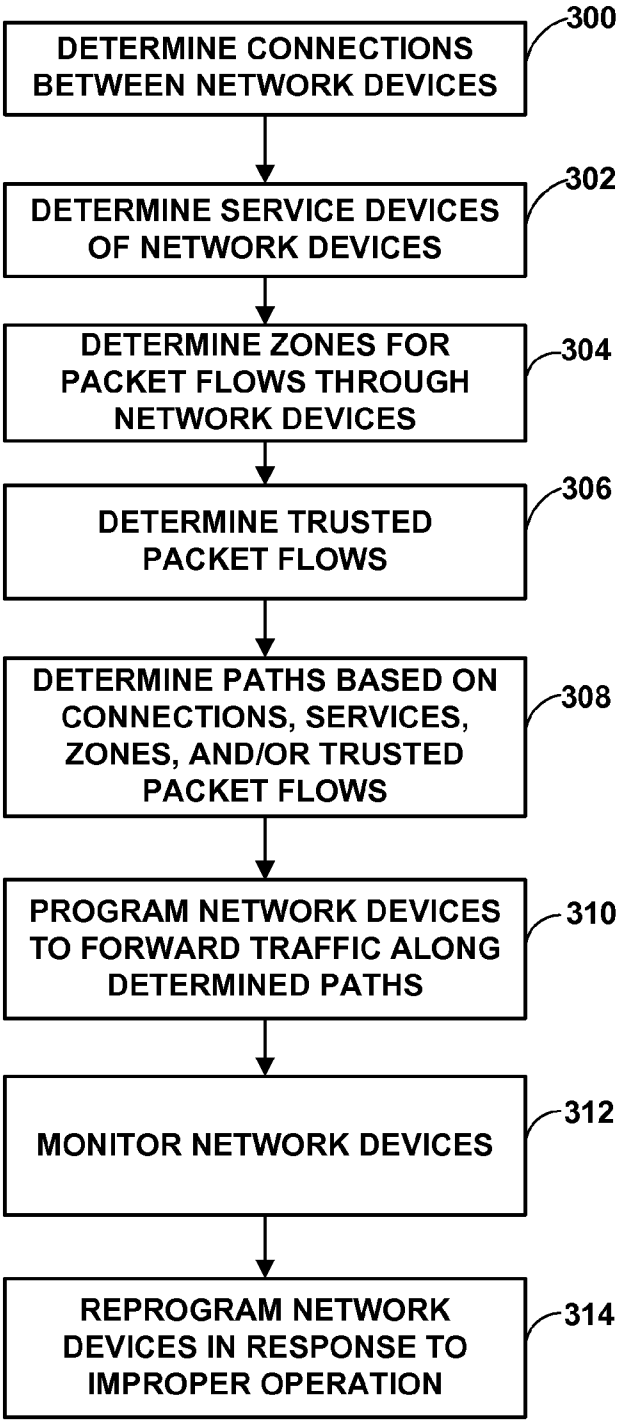
DETERMINE CONNECTIONS BETWEEN NETWORK DEVICES
300
DETERMINE SERVICE DEVICES OF NETWORK DEVICES
302
DETERMINE ZONES FOR PACKET FLOWS THROUGH NETWORK DEVICES
304
DETERMINE TRUSTED PACKET FLOWS
306
DETERMINE PATHS BASED ON CONNECTIONS, SERVICES, ZONES, AND/OR TRUSTED PACKET FLOWS
308
PROGRAM NETWORK DEVICES TO FORWARD TRAFFIC ALONG DETERMINED PATHS
310
MONITOR NETWORK DEVICES
312
REPROGRAM NETWORK DEVICES IN RESPONSE TO IMPROPER OPERATION
314

FIG. 5

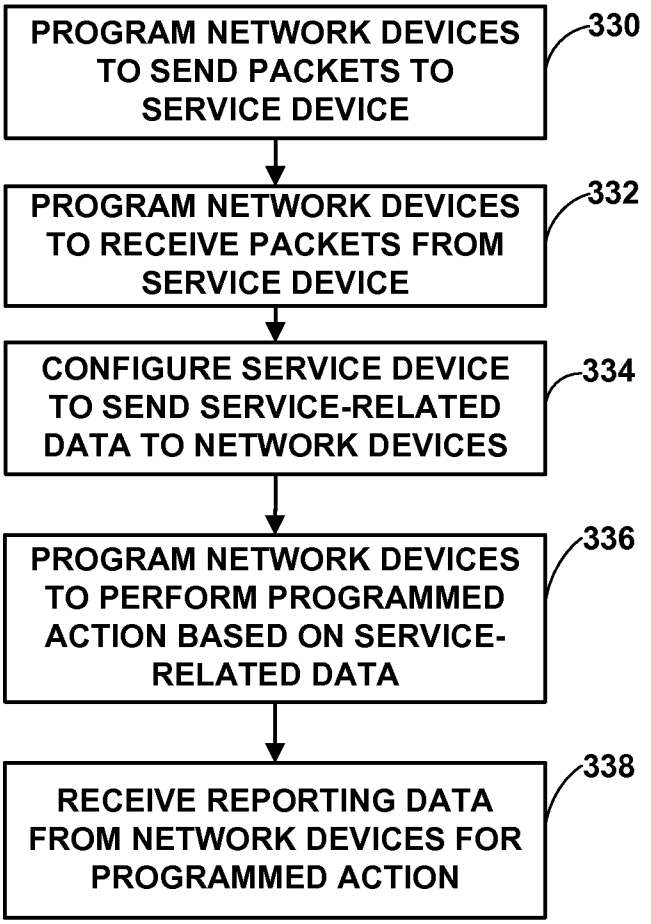
PROGRAM NETWORK DEVICES TO SEND PACKETS TO SERVICE DEVICE
330
PROGRAM NETWORK DEVICES TO RECEIVE PACKETS FROM SERVICE DEVICE
332
CONFIGURE SERVICE DEVICE TO SEND SERVICE-RELATED DATA TO NETWORK DEVICES
334
PROGRAM NETWORK DEVICES TO PERFORM PROGRAMMED ACTION BASED ON SERVICE-RELATED DATA
336
RECEIVE REPORTING DATA FROM NETWORK DEVICES FOR PROGRAMMED ACTION
338

FIG. 6

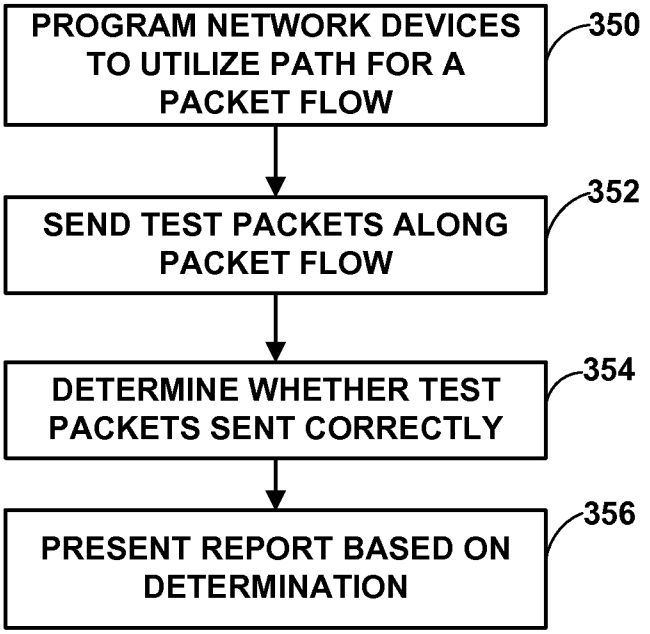
PROGRAM NETWORK DEVICES TO UTILIZE PATH FOR A PACKET FLOW
350
SEND TEST PACKETS ALONG PACKET FLOW
352
DETERMINE WHETHER TEST PACKETS SENT CORRECTLY
354
PRESENT REPORT BASED ON DETERMINATION
356

FIG. 7

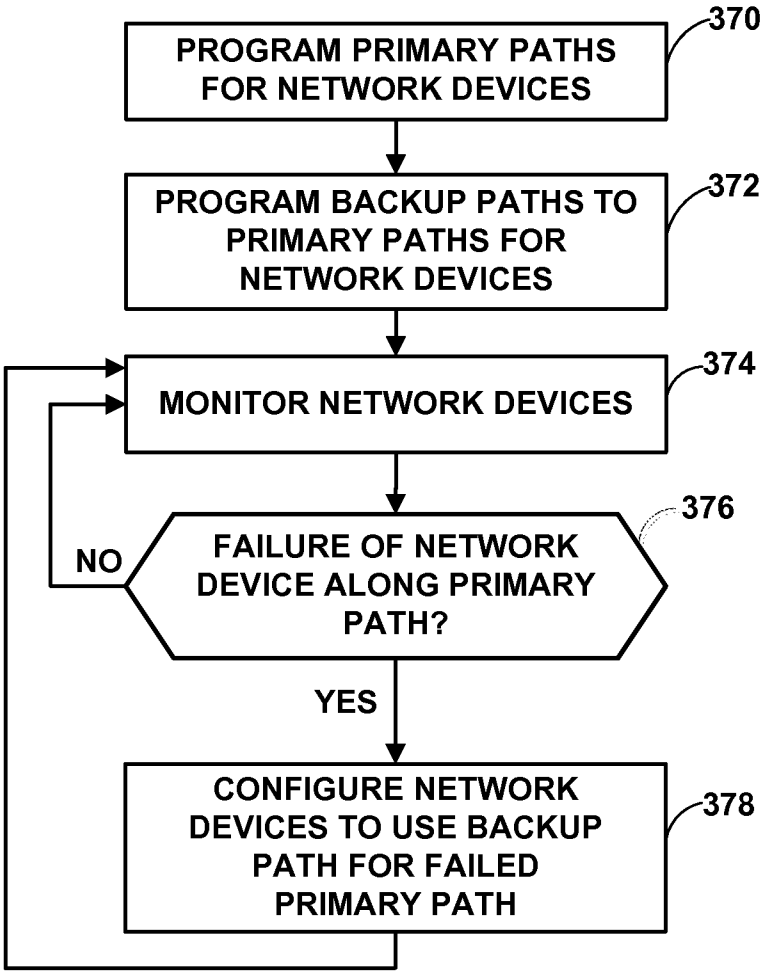
PROGRAM PRIMARY PATHS FOR NETWORK DEVICES
370
PROGRAM BACKUP PATHS TO PRIMARY PATHS FOR NETWORK DEVICES
372
MONITOR NETWORK DEVICES
374
FAILURE OF NETWORK DEVICE ALONG PRIMARY PATH?
376
NO
YES
CONFIGURE NETWORK DEVICES TO USE BACKUP PATH FOR FAILED PRIMARY PATH
378

FIG. 8

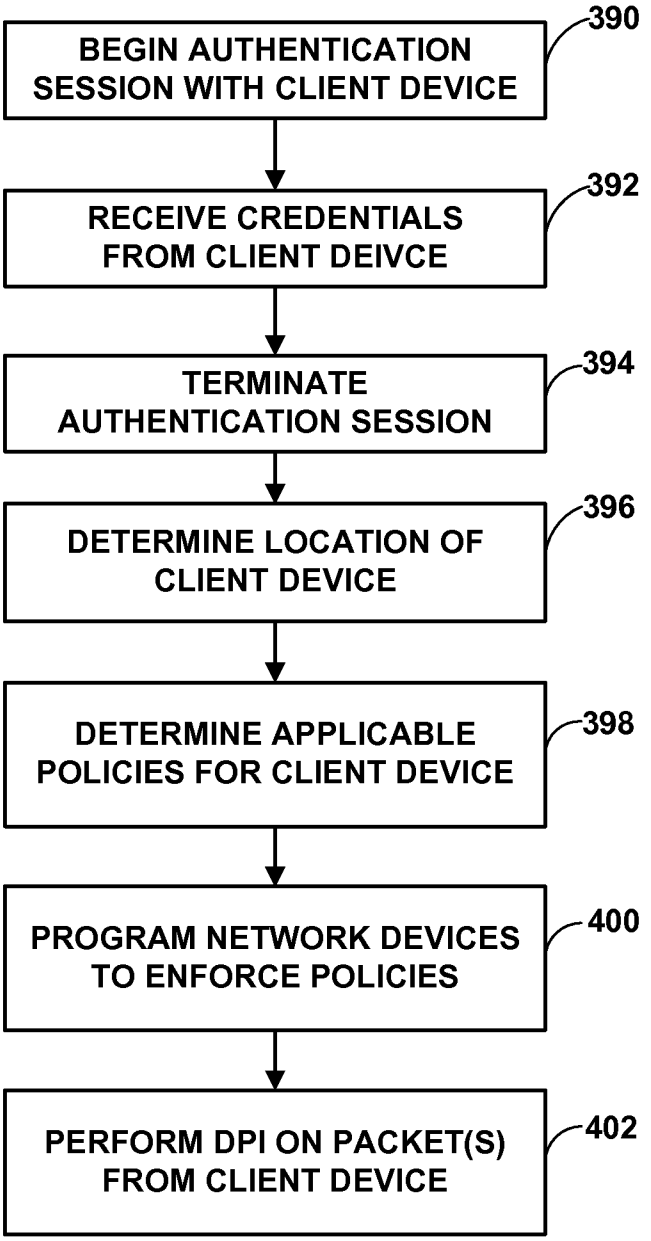
BEGIN AUTHENTICATION SESSION WITH CLIENT DEVICE
390
RECEIVE CREDENTIALS FROM CLIENT DEIVCE
392
TERMINATE AUTHENTICATION SESSION
394
DETERMINE LOCATION OF CLIENT DEVICE
396
DETERMINE APPLICABLE POLICIES FOR CLIENT DEVICE
398
PROGRAM NETWORK DEVICES TO ENFORCE POLICIES
400
PERFORM DPI ON PACKET(S) FROM CLIENT DEVICE
402

FIG. 9

HIGH AVAILABILITY FOR SOFTWARE DEFINED NETWORKS

This application claims the benefit of U.S. Provisional Application No. 61/703,692, filed Sep. 20, 2012, the entire contents of which are hereby incorporated by reference.

TECHNICAL FIELD

This disclosure relates to computer networks and, in particular, software defined networks.

BACKGROUND

Computer networks are formed by a collection of devices operating according to a set of various protocols. Typical computer networks are formed by routers that each executes routing protocols to discover routes between various endpoints, and switches that execute switching protocols, such as the spanning tree protocol (STP). In accordance with the routing protocols, routers exchange information regarding routes discovered by the routers. In this manner, each router typically performs its own determination as to the best routes to use to cause traffic to traverse the network.

Recently, software defined networks have been developed as a way to deploy and operate networks and develop new networking applications. In general, software defined networks involve the use of a standalone controller that performs the control functionality for a set of network devices. As an example of software defined networking, in the case of routing, rather than routers performing individual analyses to determine routes through the network, the controller can determine the routes and program other devices in the network to behave according to the determinations made by the controller. Different protocols may be used to implement software defined networking, including open protocols like OpenFlow, and proprietary protocols from network vendors. OpenFlow is described in McKeown et al., "OpenFlow: Enabling Innovation in Campus Networks," http://www.openflow.org//documents/openflow-wp-latest.pdf, which is hereby incorporated by reference in its entirety.

SUMMARY

In general, this disclosure describes techniques related to controlling software defined networks (SDNs). A software defined network is generally a network of interconnected computing devices having forwarding planes or data planes that can be programmed remotely by one or more controller devices. In this manner, the control plane can be physically separate from the data plane (or forwarding plane) for an SDN. These computing devices can have either physical instantiation or virtual (software-only) instantiation without the presence of a hardware appliance. This disclosure describes various techniques related to controlling SDNs.

In one example, a method includes determining, by a controller device for a software defined network, connections between network devices in the software defined network, determining, by the controller device, one or more paths for network traffic between the network devices based on the determination of the connections, and programming, by the controller device, the network devices to direct network traffic along the one or more paths.

In another example, a controller device for a software defined network includes one or more interfaces for communicating with network devices in the software defined network, and one or more processors configured to determine connections between the network devices, determine one or more paths for network traffic between the network devices based on the determination of the connections, and program the network devices to direct network traffic along the one or more paths.

In another example, a computer-readable storage medium has stored thereon instructions that, when executed, cause a processor of a controller device for a software defined network to determine connections between network devices in the software defined network, determine one or more paths for network traffic between the network devices based on the determination of the connections, and program the network devices to direct network traffic along the one or more paths.

In another example, a method includes programming, by a controller device for a software defined network (SDN), a first network device of the SDN to send packets of a packet flow to a service device, and programming, by the controller device, one or more network devices of the SDN to perform a programmed action on packets of the packet flow based on data received from the service device for the packet flow.

In another example, a controller device for a software defined network (SDN) includes one or more network interfaces configured to communicate with network devices of the SDN, and one or more processors configured to program a first network device of the SDN to send packets of a packet flow to a service device, and program one or more network devices of the SDN to perform a programmed action on packets of the packet flow based on data received from the service device for the packet flow.

In another example, a computer-readable storage medium has stored thereon instructions that, when executed, cause a processor of a controller device for a software defined network (SDN) to program a first network device of the SDN to send packets of a packet flow to a service device, and program one or more network devices of the SDN to perform a programmed action on packets of the packet flow based on data received from the service device for the packet flow.

In another example, a method includes programming, by a controller device for a software defined network (SDN), a set of network devices of the SDN to form a path through the SDN and to send data representative of packets sent along the path to the controller device, sending, by the controller device, packets of a packet flow corresponding to the path to one of the set of network devices, determining, by the controller device, whether the set of network devices is properly forwarding the packets of the packet flow along the path based on data received from the set of network devices, and presenting a report representative of the determination.

In another example, a controller device for a software defined network (SDN) includes one or more network interfaces configured to communicate with network devices of the SDN, and one or more processors configured to program a set of network devices of the SDN to form a path through the SDN and to send data representative of packets sent along the path to the controller device, send, via one of the network interfaces, packets of a packet flow corresponding to the path to one of the set of network devices, determine whether the set of network devices is properly forwarding the packets of the packet flow along the path based on data received from the set of network devices, and present a report representative of the determination.

In another example, a computer-readable storage medium has stored thereon instructions that, when executed, cause a processor of a controller device for a software defined network (SDN) to program a set of network devices of the SDN to form a path through the SDN and to send data representative of packets sent along the path to the controller device,

send packets of a packet flow corresponding to the path to one of the set of network devices, determine whether the set of network devices is properly forwarding the packets of the packet flow along the path based on data received from the set of network devices, and present a report representative of the determination.

In another example, a method includes determining, by a controller device for a software defined network (SDN), a primary path for network traffic between network devices of the SDN, determining, by the controller device, a backup path to the primary path for the network traffic between the network devices of the SDN, and, in response to a failover event, configuring the network devices to switch from the primary path to the backup path.

In another example, a controller device for a software defined network (SDN) includes one or more network interfaces configured to communicate with network devices of the SDN, and one or more processors configured to determine a primary path for network traffic between network devices of the SDN, determine a backup path to the primary path for the network traffic between the network devices of the SDN, and, in response to a failover event, configure the network devices to switch from the primary path to the backup path.

In another example, a computer-readable storage medium has stored thereon instructions that, when executed, cause a processor of a controller device for a software defined network (SDN) to determine a primary path for network traffic between network devices of the SDN, determine a backup path to the primary path for the network traffic between the network devices of the SDN, and, in response to a failover event, configure the network devices to switch from the primary path to the backup path.

In another example, a method includes obtaining, by a controller device of a software defined network (SDN), data representative of physical network devices in the SDN, wherein the physical network devices comprise one or more switches and one or more controllers including the controller device, instantiating, by the controller device, software-based controller objects for each of the one or more controllers, wherein the software-based controller objects each comprise data representative of a respective instance name, a respective server hostname, and a respective server host port, instantiating, by the controller device, software-based switch description objects for each of the one or more switches, wherein the software-based switch description objects each comprise data representative of a respective primary controller corresponding to a controller of the one or more controllers, a respective switch identifier, a respective switch media access control (MAC) address, a respective Internet protocol (IP) address, and a respective array of port description objects for each physical port on the respective switch, and managing, by the controller device, at least some of the switches using the switch description objects and the controller objects.

In another example, a controller device for a software defined network (SDN) includes one or more network interfaces configured to communicate with network devices of the SDN, and one or more processors configured to obtain data representative of physical network devices in the SDN, wherein the physical network devices comprise one or more switches and one or more controllers including the controller device, instantiate software-based controller objects for each of the one or more controllers, wherein the software-based controller objects each comprise data representative of a respective instance name, a respective server hostname, and a respective server host port, instantiate software-based switch description objects for each of the one or more switches, wherein the software-based switch description objects each comprise data representative of a respective primary controller corresponding to a controller of the one or more controllers, a respective switch identifier, a respective switch media access control (MAC) address, a respective Internet protocol (IP) address, and a respective array of port description objects for each physical port on the respective switch, and managing, via the network interfaces, at least some of the switches using the switch description objects and the controller objects.

In another example, a computer-readable storage medium has stored thereon instructions that, when executed, cause a processor of a controller device for a software defined network (SDN) to obtain data representative of physical network devices in the SDN, wherein the physical network devices comprise one or more switches and one or more controllers including the controller device, instantiate software-based controller objects for each of the one or more controllers, wherein the software-based controller objects each comprise data representative of a respective instance name, a respective server hostname, and a respective server host port, instantiate software-based switch description objects for each of the one or more switches, wherein the software-based switch description objects each comprise data representative of a respective primary controller corresponding to a controller of the one or more controllers, a respective switch identifier, a respective switch media access control (MAC) address, a respective Internet protocol (IP) address, and a respective array of port description objects for each physical port on the respective switch, and manage at least some of the switches using the switch description objects and the controller objects.

In another example, a method includes receiving, by a controller device for a software defined network (SDN), credentials from a client device in accordance with a public key infrastructure (PKI)-based authentication protocol, determining, by the controller device, one or more policies that are applicable to the client device based on the received credentials, and programming, by the controller device, network devices of the SDN to enforce the determined policies on a per-packet-flow basis for packet flows including the client device.

In another example, a controller device for a software defined network (SDN) includes one or more network interfaces configured to communicate with network devices of the SDN, and one or more processors configured to receive credentials from a client device in accordance with a public key infrastructure (PKI)-based authentication protocol, determine one or more policies that are applicable to the client device based on the received credentials, and program network devices of the SDN to enforce the determined policies on a per-packet-flow basis for packet flows including the client device.

In another example, a computer-readable storage medium has stored thereon instructions that, when executed, cause a processor of a controller device for a software defined network (SDN) to receive credentials from a client device in accordance with a public key infrastructure (PKI)-based authentication protocol, determine one or more policies that are applicable to the client device based on the received credentials, and program network devices of the SDN to enforce the determined policies on a per-packet-flow basis for packet flows including the client device.

The details of one or more examples are set forth in the accompanying drawings and the description below. Other

features, objects, and advantages will be apparent from the description and drawings, and from the claims.

BRIEF DESCRIPTION OF DRAWINGS

FIG. **1** is a block diagram illustrating an example system in which various techniques of this disclosure may be used.

FIG. **2** is a block diagram illustrating an example set of components of a software defined network (SDN) controller.

FIG. **3** is a conceptual diagram illustrating an example system including various devices that may be used in accordance with the techniques of this disclosure.

FIG. **4** is a conceptual diagram illustrating another example system including various devices that may be used in accordance with the techniques of this disclosure.

FIG. **5** is a flowchart illustrating an example method for constructing paths in an SDN.

FIG. **6** is a flowchart illustrating an example method for directing network traffic of an SDN to a service device.

FIG. **7** is a flowchart illustrating an example method for using test traffic to determine whether an SDN packet flow is operating correctly.

FIG. **8** is a flowchart illustrating an example method for using one or more backup paths to a primary path through an SDN.

FIG. **9** is a flowchart illustrating an example method for performing authentication and authorization techniques described herein.

DETAILED DESCRIPTION

FIG. **1** is a block diagram illustrating an example system **100** in which various techniques of this disclosure may be used. In this example, system **100** includes software defined network (SDN) **106**, which includes network devices **108**, **110** and service devices **116**. Network devices **108**, **110** may comprise switches, and other devices (not shown). These network devices can be physical instantiations or virtual instantiations. SDN **106** may also include other types of devices, such as routers, load balancers, various L4-L7 network devices, or even multi-tenant capable devices, among other network devices. Again, these network devices can be either of physical or virtual instantiations. In general, network devices of SDN **106**, such as network devices **108**,**110**, can be programmed to forward network traffic. System **100** also includes software defined network (SDN) controller **112**. Administrator **114** uses SDN controller **112** to control (that is, program) network devices of SDN **106**, such as network devices **108**, **110**.

SDN **106** generally serves to interconnect various endpoint devices, such as client device **102** and server device **104**. In addition, SDN **106** may provide services to network traffic flowing between client device **102** and server device **104**. Alternatively, SDN **106** may provide services to client device **102**, without further directing traffic to server device **106**. For example, administrator **114** may use SDN controller **112** to program network devices of SDN **106** to direct network traffic for client device **102** to one or more of service devices **116**. Service devices **116** may include, for example, intrusion detection service (IDS) devices, intrusion prevention system (IPS) devices, web proxies, web servers, web-application firewalls and the like. In other examples, service devices **116** may, additionally or alternatively, include devices for providing services such as, for example, denial of service (DoS) protection, distributed denial of service (DDoS) protection, traffic filtering, wide area network (WAN) acceleration, or other such services. Service devices **116** may also additionally or alternatively include malware detection devices, network anti-virus devices, network packet capture and analysis devices, honeypot devices, reflector net devices, tar pit devices, domain name service (DNS) and global DNS server devices, mail proxies, and anti-spam devices.

Service devices **116** may, additionally or alternatively, include devices in various device categories such as, for example, network and application security devices, application optimization devices, scaling devices, traffic shaping devices, and/or monitoring and analytics devices. Moreover, although shown as individual devices, it should be understood that service devices may be realized by physical devices, multi-tenant devices, or using virtual services (e.g., cloud-based services). Moreover, service devices **116** may represent multi-function devices. For purposes of example and ease of explanation, this disclosure primarily describes individual service devices. However, it should be understood that the techniques of this disclosure may be readily applied to virtual devices and cloud-based applications, in addition or in the alternative to physical devices. Likewise, where this disclosure refers to a switch or other network device, it should be understood that these techniques may apply to virtual switches or other virtual network devices.

SDN controller **112** may implement any or all of the techniques described in this disclosure for controlling various devices of SDN **106**, such as network devices **108**, **110**, and service devices **116**. These techniques are described in greater detail below. Examples of the techniques described below include a data model for managing devices of an SDN, implementing high availability among devices of an SDN, performing services for packets flowing along a path through an SDN, trigger-driven policy distribution, and using test traffic to verify whether devices of the SDN are operating correctly.

Users of SDN controller **112** may be provided with the ability to create programs that are executable by SDN controller **112**. For example, a software development kit (SDK) may be provided for creating programs that can be executed by SDN controller **112**. In this manner, users or other third parties may utilize an environment to write applications that can be executed by SDN controller **112**. For example, SDN controller **112** itself may host one or more L4-L7 services, rather than (or in addition to) services provided by service devices **116**. As another example, a L3 application (such as Quagga, a Layer 3 routing stack) may be executed by SDN controller **112**. In this case, the Quagga routing stack would be running a standard routing protocol such as OSPF (Open Shortest Path Forwarding) or BGP (Border Gateway Protocol) and would update its routing tables like before, except that it would use the SDN controller **112** to command the network equipment to update their forwarding tables.

SDN controller **112** may be configured to logically represent an existing physical or virtual topology within a demilitarized zone (DMZ) in an organizational network, such that the logical topology can be manipulated with corresponding physical impact on flows. SDN controller **112** may also be used in combination with a switching platform into which existing physical devices are plugged, and a software control platform that is able to virtually map and control the logical flows running through the switch. The switching platform may be powered by ASICs (application specific integrated circuits) and provide flow control capabilities as exposed by proprietary vendor-specific APIs or open standards such as OpenFlow. Alternatively, the switching platform may be based on software, while providing requisite hardware for executing the software (e.g., computer-readable

media for storing instructions and one or more processing units for executing the instructions).

Devices that may be plugged into (that is, communicatively coupled to) SDN controller **112** (also sometimes referred to as a "FlowDirector") generally include classes of devices found in most network-based DMZs, including firewalls, web proxies, mail proxies, AV (anti-virus) proxies, mail systems, IDS (intrusion detection systems), IPS (intrusion prevention systems), VPN (virtual private network) servers, web application firewalls, vulnerability scanners, network recording and analysis systems, and packet shapers. Most of these devices are either security devices, or traffic engineering or visibility devices, in some examples.

SDN controller **112** may overcome certain problems encountered by devices of network-based DMZs. For example, such conventional DMZs may suffer from a lack of visibility. That is, without physically tracing wire connections and where each connection ends up, it can be difficult to determine which devices are connected in conventional DMZs, and even more difficult to determine the type of traffic that is flowing through the conventional DMZs end to end (that is, from the ingress Internet connection to the internal organizational network or application clusters in the datacenter). Moreover, conventional DMZs can be difficult to manage, in that reconfiguration of a conventional DMZ network often requires manual reconnections of cables, which is an expensive and error-prone activity.

SDN controller **112** may receive data as input from service devices **116**. For example, SDN controller **112** may be configured to receive data from an intrusion detection system (IDS) device, a Denial of Service (DoS) device, a Distributed Denial of Service (DDoS) device, an intrusion prevention system (IPS) device, or the like. Based on this information, SDN controller **112** may make network enforcement decisions for specific traffic flows. That is, SDN controller **112** may program network devices of SDN **106** to perform programmed actions on packets of a packet flow based on this data. Such programmed actions may include:

- Allow—explicitly allow a certain network flow to proceed to its destination
- Block—explicitly block a certain flow from traversing SDN **106**
- Mirror—allow the traffic, but send a copy of the traffic for deeper inspection or recording to, e.g., one of service devices **116**
- Redirect—redirect the traffic to another network device (such as a honeypot device or other device of service devices **116**) for either inspection or to keep a potential hacker 'busy' to determine if there is a real security threat.
- Transform—modify or translate values of headers of packets in the network flow
- Encapsulate—encapsulate packets in the network flow with a particular header

SDN controller **112** may also log the programmed actions and information used to make the enforcement decisions, present the information to administrator **114** (or other user), and/or export data representative of the logs or results to a third party application, which may or may not include the application that sent an event that triggered SDN controller **112** to enforce a new policy.

Moreover, SDN controller **112** may direct traffic of distinct packet flows through a common security device, e.g., one of service devices **116**. For example, SDN controller **112** may direct network traffic of various paths (that is, paths that end at distinct destinations) such that the paths flow through a common security device, e.g., an IDS device, a firewall, or the like. The paths may be determined on a per-packet basis or on a per-packet-flow basis, in various examples.

SDN controller **112** may also be configured to track changes related to rules provided for modifying paths through SDN **106**. As an example, SDN controller **112** may track identifying information for a user who added, modified, or removed a rule. SDN controller **112** may store, track, and report such information for any or all rules used by SDN controller **112**. In this manner, for any or all rules of SDN controller **112**, information may be available regarding who made the rule, where the rule was made as part of Rule Flows, how SDN controller **112** received the rule (e.g., via an application programming interface (API), a graphical user interface (GUI), or other interface), when the rule was added or removed, and any notes indicating reasons for the change, addition, or removal to the rule.

In some examples, SDN controller **112** may interact with an authentication, authorization, and accounting (AAA) server or AAA infrastructure to track changes to the rules. The AAA server or AAA infrastructure may implement, for example, Remote Authentication Dial In User Service (RADIUS), Diameter, Lightweight Directory Access Protocol (LDAP), or the like. Likewise, SDN controller **112** may implement a AAA client. The AAA server or AAA framework may include configuration data that specifies entitlement information, e.g., using user attributes or group attributes, that specifies privileges for a user or a group to which the user belongs. Such privileges may include, for example, any or all of the ability to view, add, modify, or delete rules. Such capabilities may be extended to certain applications as well (e.g., using private key infrastructure (PKI) techniques to identify the various applications), and/or otherwise used when other systems attempt to access SDN controller **112** or other devices of SDN **106**.

In addition to the problems associated with conventional DMZs discussed above, conventional DMZs are not able to dynamically receive external inputs to automatically re-configure the DMZ to increase the security profile of the network, or to enforce new rules that protect the network from next-generation security threats. Accordingly, traffic that is not supposed to traverse the network may enter the network, which may result in network outage, data loss, IP loss, or other disruptions. SDN controller **112** may overcome these problems by accepting external triggers or events to automatically update security policies on the DMZ (or internal security zone) to block traffic that is not supposed to traverse a specific DMZ or security zone. SDN controller **112** may then push this information down to programmable flow devices (e.g., Ethernet switches of SDN **106**). SDN controller **112** may be designed to make low cost Ethernet switches into highly controlled and coordinated security appliances.

SDN controller **112** may also provide a mechanism by which to troubleshoot applications and to both sniff traffic on certain ports as well as run tests through the devices in the DMZ to ensure that the traffic is flowing appropriately (e.g., to ensure that the devices are not malfunctioning). More particularly, SDN controller **112** may provide the ability to both inject test flows (automatically based on introspection on the device parameters and configuration) and observe test flows (by attaching a virtual probe) anywhere along a flowchain (that is, a network path through SDN **106**) on SDN controller **112**. When one of the devices does not indicate that it received data of a test flow in a timely manner, SDN controller **112** may determine that the one of the devices is malfunctioning, and SDN controller **112** may reprogram the devices to avoid the malfunctioning device. For example, SDN controller **112** may reprogram the devices to direct

network traffic around a network device that is determined to be malfunctioning. In this manner, SDN controller **112** may provide various advantages, such as the ability to troubleshoot an existing live system without disrupting traffic and to determine what traffic is traversing a particular point in a flowchain.

SDN controller **112** may also configure network devices of SDN **106** to provide high availability. That is SDN controller **112** may configure two or more devices as a high availability pair, such that one device is a primary device, and another device is a backup device to the primary device, for a particular path or packet flow. In this manner, failover can occur from the primary device to the backup device. SDN controller **112** may overcome issues related to high availability or resiliency that arise from brittle, manually managed configurations of conventional DMZ networks. SDN controller **112** allows dynamic reconfiguration of a DMZ network for SDN **106** based on failures or other dynamic network events. This allows administrator **114** to pre-determine the response of the DMZ network on a per-flow basis.

In the example of FIG. **1**, SDN controller **112** controls network devices **108**, **110** of SDN **106**. However, it should be understood that SDN controller **112** may control any packet processing platform, such as a physical device, a virtual platform, a cloud based platform, or any other sort of packet processing platform.

SDN controller **112** may provide a platform that encompasses various capabilities for custom software-defined networking deployments. Such capabilities may include: a flexible network controller with the ability to communicate using standards-based or proprietary control protocols to control network flows on networking devices, both physical and virtual; a standards-based policy engine tied into the network controller logic; an extensible API for programmatic access from applications; and/or additional networking services that can execute on SDN controller **112**.

Development of the techniques of this disclosure has uncovered a business need to solve network access control and privileges problems on wired, wireless, and/or remote access networks, as networks become flatter (e.g., more operation at L2 of the OSI model with less operation at L3 of the OSI model). As the roles become more global and security needs become more stringent, the problems of network access control and privileges becomes more complex. In addition to the access control problem, there is also an increasing focus on the security service insertion problem—putting in appropriate security services based on user identity and the user's role in the organization (e.g., for compliance and regulations, which may be country-based).

Prior to the development of the techniques of this disclosure, existing access control solutions for networks were limited to coarse grained controls such as VLANs and were limited due to the nature of limited number of VLANs. Creating per-user VLANs is not necessarily appropriate, due to the complexity of management. SSL-VPN or IPsec VPN solutions that require users to tunnel back to a central control point (sometimes back in a different country) can be complex and inefficient, and can ignore the local network constraints or settings. Although OpenFlow and other software-defined networking technologies can be applied to the problem using fine-grained flow controls, the policy and identity infrastructure were not sufficiently mature.

Thus, this disclosure also describes certain techniques that may be used to overcome the above noted problems relating to access control in a software defined network. In accordance with these techniques, a platform (such as SDN controller **112**) may have network flow control capabilities on one end (e.g., via the OpenFlow (or other) protocol, interacting with both physical and virtual network access devices (switches for instance)), and a policy and identity stack on the other end.

To identify a user and device prior to applying the appropriate policy, standards-based techniques can be used. Traditionally, switches have provided MAC address authentication, using 802.1X based authentication and port-based controls, as well as Web-Authentication. In an OpenFlow or SDN network, these stacks are not necessarily available on the network access device. Therefore, in accordance with these techniques, these stacks may be moved onto a central application/control platform, so that the authentication function can be appropriately performed on the central platform. The central platform may be a controller, such as SDN controller **112**, or simply an application that has a southbound OpenFlow or other SDN interface.

Using the OpenFlow or other SDN protocol, it is possible to set up the recognition of Extensible Authentication Protocol (EAP) over Local Area Network (EAPOL) packets (transport mechanism for 802.1X protocol) and to create a conversation with the control platform to emulate an 802.1X exchange. In this manner, system **100** can perform authentication via EAP methods (using certificates or passwords) to identify the end-point (e.g., user and client device, e.g., client device **102**). Unlike 802.1X port-based security, however, the use of 802.1X in an SDN framework can be used to lock down specific MAC source addresses, and can apply per-flow (that is, per-packet-flow) admission controls, as well as per-flow service orchestration and insertion to scan the traffic for malicious or sensitive content, as dictated by a policy engine.

In this framework, multiple EAP and 802.1X sessions can be constructed with different MAC addresses and very fine-grained flow rules be applied. This framework can also be used for MAC-authentication situations, where the end-points are not configured to utilize 802.1X, as well as for web-based authentication via a captive portal mechanism tied to the central control platform.

These techniques may further be extended, e.g., by causing the central control platform to perform the role of a RADIUS server to terminate the entire 802.1X conversation, removing the need for an additional external component and reducing the overall complexity and latency of the 802.1X conversation. In this manner, the central control platform can perform all of the necessary policy evaluations based on user identity and other context to determine the nature of access that should be granted, as well as the orchestration of necessary services to filter or scan each and every flow.

As another possible extension, the central control platform can also capture and inspect the first or a fixed number of packets to perform deep packet inspection for application classification to extend the policy enforcement to specific application types.

As yet another possible extension, the central control platform for mobile devices can look up user and/or device location information via various device location services, such as source IP address, GPS information, DNS, or other location based services, to extend the policy enforcement to specific locations. The central controller could also use time, day, and/or date as an element in decision making. Thus, a central policy server controller may apply fine grained policies based on user, device, application, time, and/or location information, and apply these policies on L2 network devices, such as switches (e.g., network device **108** and network device **110**).

FIG. **2** is a block diagram illustrating an example implementation of SDN controller **112** of FIG. **1**. In this example, SDN controller **112** includes control unit **130**, user interface **150**, and SDN interface **152**. Control unit **130** represents

hardware, software, and/or firmware for performing the functions attributed to control unit **130**. When implemented in software or firmware, it is presumed that control unit **130** further includes requisite hardware, such as one or more processors and/or computer readable memory for storing software or firmware instructions.

In this example, control unit **130** includes SDN modeling unit **132**, path determination unit **134**, path verification unit **136**, service device control unit **138**, SDN model **140**, rules **142**, event record **144**, statistics **146**, and security information **148**.

SDN modeling unit **132** receives data representative of physical network devices in SDN **106**, such as network device **108**, network device **110**, and service devices **116** (FIG. **1**). SDN modeling unit **132** may also receive data representative of controller devices, including SDN controller **112**, that control devices of SDN **106**. SDN modeling unit **132** forms SDN model **140**, which includes data that represents the physical devices of SDN **106**. SDN model **140** may include software-based objects (that is, data for software objects conforming to the object oriented programming (OOP) paradigm) that represent the physical devices in a physical view, as well as a logical view of SDN **106**. As noted above, the physical view includes devices such as controllers, switches, and devices connected to the switches (e.g., service devices **116**) managed by controllers such as SDN controller **112**.

The example data model described in this disclosure defines a low-level protocol abstraction layer and a high-level application data model that is suitable for building user interfaces and server-side functionality for management of network infrastructure. In this manner, the data model may be flexible and suitable for building user-facing products that use Software Defined Networking as a foundational technology for configuration and control of an underlying network infrastructure. SDN model **140** may include instantiations of software-based controller objects, one controller object for each physical controller device. Each controller object instance may include data for an identifier (e.g., an instance name), a server hostname, and a server host port that represents the corresponding controller device. The controller object may further define a set of switches that are permitted to connect to the corresponding controller device, to allow switch authentication. SDN model **140** may also include software-based switch entry objects for each switch of SDN **106**, where each switch entry object may include data representative of the corresponding switch administration port media access control (MAC) address and a text description of the switch.

SDN model **140** may further include software-based switch description objects for the switches of SDN **106**. Each switch description object represents a corresponding physical switch that is being managed by the system. Each switch object specifies the primary (and, if applicable, secondary) controllers the switch is connected to. The system supports redundant controller configurations, in which case both primary and secondary controllers may be specified for the switches. The switch description object may further include primary and secondary controller object links, text strings describing the switch name, switch MAC address, switch Internet protocol (IP) address, manufacture description, hardware description, software description, device serial number, and data path description. Fields may indicate the capabilities support by the switch, such as support for flow statistics, table statistics, group statistics, queue statistics, whether the switch supports IP fragment reassembly, whether the switch supports ARP matching, and the number of ports, tables and buffers available within the switch.

The switch description object may further include an array of software-based port description objects, one for each physical port on the switch. A port description object may include data representative of a port number, port name text string, MAC address, and fields that represent the capabilities of the switch port such as the port's media type (e.g., fiber or copper), port speed (e.g., 10 MB, 100 MB, 1 GB, 10 GB, 40 GB, 100 GB 1 TB) duplexicity (e.g., full duplex or half duplex), and auto-negotiation.

SDN model **140** may further include data representing a network topology for SDN **106**. Rules **142** corresponds to data representing rules for generating flow rules. The network topology and rules of rules **142** may be defined by software-based objects, such as FlowChain objects, FlowLink objects, SubDevice objects, Device objects, DevicePort objects, PortRange objects, Source objects, Zone objects, SwitchPort objects, and Network objects. Modifier actions, that is, actions that modify the network, may also be modeled by software-based objects, such as push virtual local area network (VLAN) objects, pop VLAN objects, sniffer objects, splitter objects, set multiprotocol label switching (MPLS) label objects, push MPLS label, pop MPLS label, or other actions.

A FlowChain object may define the configuration data needed to configure and manage a set of flows (that is, packet flows) through the network infrastructure (e.g., through SDN **106**). Each FlowChain object may include an identifier (e.g., a name), a Source object, one or more FlowLink objects, a flag to indicate whether the FlowChain is enabled or disabled, a flag to indicate whether the FlowChain is bi-directional, and a set of statistics for the FlowChain. The FlowChain may be defined using a set of configuration commands, e.g., extensible markup language (XML) commands, JavaScript Object Notation (JSON) commands, or other commands. In some examples, the commands may be natural language friendly. That is, the commands may be easily read and interpreted by a human operator. Such commands may benefit users in interacting with a device for creating a FlowChain, as well as other users, e.g., for audits and validation.

A FlowLink object may define the SubDevice associated with the FlowChain and an optional set of ModifierActions to be applied to traffic for this FlowChain.

A Device object may define a physical device that performs one or more capabilities for traffic flowing through the network. A Device object may include data representative of text strings that define an identifier for the device (e.g., the device name), device vendor, device model number, and name of an image file (e.g., a GIF, JPEG, TIFF, or PNG image file) associated with the device. The image file type is defined by a separate enumerated field within the object. The Device also includes links to one or more SubDevices associated with the physical device represented by this Device object.

A SubDevice object may define a subset of network device functionality for multi-function devices. The SubDevice object may comprise data representative of a text string containing an identifier for the SubDevice (e.g., the SubDevice's name), a link to the Device object associated with the SubDevice, the ingress and egress Switch identifier and Switch port number, ingress and egress VLAN tags, MPLS labels, flags that indicate whether the device is network address translation (NAT)-capable and port address translation (PAT)-capable, one or more Service object links, and/or a set of text strings that name the physical ports on the SubDevice.

A Service object may define a class of traffic that flows across the network. Each class of traffic can include data representative of an identifier (e.g., a text string that names the service), a protocol type enumeration (e.g., IP, ARP, etc.), and

one or more IP port-based service entries that define the traffic controlled by the flow (e.g., POP3, HTTP, SMTP FTP etc.).

A PortRange object may define the traffic controlled by the flow (e.g., POP3, HTTP, SMTP, FTP, etc.). Each PortRange object may include data representative of an identifier (e.g., a text string description) and a range of IP ports defined by a start and end IP port number. Individual IP ports may be defined by setting the start and end IP ports to the same value.

A DevicePort object may be used to define the identifier (e.g., the name) of each physical port supported by a SubDevice.

A Source object may define the parameters needed to specify the network traffic source. Each Source object may include data representative of an identifier (e.g., a text string name) for the source, and a set of one or more zones. In particular, one or more flows may be grouped into zones. The zones may represent administrative or security areas that ensure that network managers or customers cannot interfere with each other from a switch control or data plane perspective. For example, a test or research SDN environment may operate entirely within a single zone, and a simple production deployment may have a secure administrative zone used for management purposes and an open operational zone used for dynamic network programming. Multi-tenant or multi-application deployments may utilize unique zones for each customer or function or application. There is no fundamental restriction to how zones can be partitioned. In some examples, zones are partitioned on a per IP address, per port, per VLAN, or possibly per subnet basis, but this concept can be usefully extended on a per protocol basis or to any other packet header field or per application or per user. SDN controller **112** may ensure that a flow rule written for one zone incorporates sufficient additional match rules to prevent flows from other zones from being processed inappropriately. Zones may be ordered by numerical priority to avoid confusion that may otherwise occur when overlapping partitions are created. Each zone may support OpenFlow, normal distributed, hybrid, or even alternate protocol types independently. Zones can also be used to partition off areas where no traffic is expected, allowing illegitimate traffic to be black holed, spanned, or redirected elsewhere for further action.

Control unit **130** may also maintain data representative of a history of statistics for elements of SDN **106**, such as switches, switch ports, flows, and flow groups. Statistics **146** of FIG. **2** represents this data. The statistics entry for each instance in time may be dynamically extensible to allow additional counters and other values to be added as the system is extended. Statistics **146** may include a set of data entries, where each entry includes date and time of the last update, packet count, byte count, received packets count, received byte count, transmitted packet count, transmitted byte count, receive errors, transmit errors, received frame errors, transmit frame errors, and collisions.

Control unit **130** may also maintain an event record **144**. Event record **144** includes data representative of an event history, which describes significant changes to SDN **106** (that is, system state). Each event of event record **144** may include data representing a time and date of the event, an event type, an event source, a severity of the event, a text description of the event, and an optional list of values (e.g., for arguments).

In some examples, SDN controller **112** may configure network devices (e.g., switches) of SDN **106** to each other and to one or more of service devices **116**. In this manner, SDN controller **112** may be configured to act, in a DMZ, as an interconnect system for in-line network appliances such as firewalls, intrusion prevention systems, and load balancers, or for out-of-band appliances such as intrusion detection systems, transaction or performance monitors, and network analysis devices. In these environments, L1-L2 connections between devices may be made using L2-L4 or even application-level intelligence. This allows the implementation of "wire-once" DMZ architectures, supporting flexible and dynamic insertion, removal, and maintenance of diverse appliances. In addition, by gathering packet and flow statistics at each connection point, SDN controller **112** may provide a consistent monitoring and debugging view of SDN **106** and the behavior of all attached appliances, allowing unexpected behavior to be quickly analyzed and isolated.

Service device control unit **138** may interact with services devices **116** to provide various services to packet flows through SDN **106**. Such services may include security services as discussed above, as well as (or alternatively) services including monitoring loss-sensitive applications that require continuous congestion and latency monitoring. These services can be combined on a per-system, per-port, per-VLAN, per-MPLS path (e.g., set of one or more MPLS labels), or per-subnet basis with, allowing the user (e.g., administrator **114**) to customize the behavior of SDN controller **112** to meet business-specific requirements. Such monitoring may be performed by a monitoring service device that monitors, e.g., packet loss, congestion, and/or latency. SDN controller **112** may form a path associated with a loss-sensitive network application such that the path includes the monitoring service device. In response to detection of loss by the monitoring device, SDN controller **112** may reprogram network devices to reduce loss, congestion, and/or latency, e.g., by directing traffic along a backup path.

One example use case for SDN controller **112** includes performing internal security zone partitioning. In today's enterprise environment, certain flows can be trusted, based on security controls placed on the end points, while others must be assumed to have some potential for risk. SDN controller **112** may create security zones based both on physical topology as well as threat assessments based on L2-L4 header information. Business-level security rules can be implemented directly on SDN controller **112** to direct only higher risk flows through specific L4-L7 devices (e.g., service devices **116**) to monitor for or block malicious traffic. That is, when an SDN interconnects a set of enterprise network devices of a common enterprise network and also provides connections for the enterprise network devices outside of the enterprise network, SDN controller **112** may determine that connections between the enterprise network devices within the enterprise network can be trusted, whereas connections to network devices outside the enterprise network cannot be trusted and, therefore, should be monitored by a security device.

Thus, SDN controller **112** may determine separate sets of packet flows based on security controls, e.g., a first set of packet flows that can be trusted and a second set of packet flows that are not trusted. Then, SDN controller **112** may determine a first set of one or more paths for the first set of packet flows that omit a security device for the first set of packet flows (that is, based on the determination that the first set of packet flows can be trusted), and a second set of one or more paths for the second set of packet flows that direct the second set of packet flows through the security device (based on the determination that the second set of packet flows are not trusted).

The security controls may include various types of information. For example, the security controls may specify values for one or more packet headers at various layers of the Open Systems Interconnection (OSI) network model. The security

controls may specify information for any or all of network layers two, three, four, five, six, and/or seven of the OSI model.

Another example use case for SDN controller **112** includes establishing a perimeter DMZ interconnection. Traffic entering a data center must often be distributed to a variety of appliances or server-based application-aware devices based on potentially deep inspection of incoming (and for certain flow types, outgoing) packets. Rather than route all traffic through L4-L7 firewalls or application load balancers, or utilize distributed protocols such as policy based routing with limited capability and complex network interactions, SDN controller **112** may allow customers (e.g., administrator **114**) to directly sort traffic on a per-packet or per-flow basis for individualized processing, saving cost, improving performance, limiting risk, improving availability, and increasing control.

Another example use case for SDN controller **112** includes establishing a "big data" DMZ. Scientific research applications often generate extremely large data sets that must be transferred from a distant source into a local data center, from a central storage repository into a remote data processing center, or among data centers. These data transfers are marked by extremely high bandwidth and/or long transfer times, and as such are sensitive to disruption. At the same time, other types of transactions to or from these areas must be carefully secured. SDN controller **112** allows the well-defined large flows to pass through switches of SDN **106** under the limited protection of high-speed L2-L4 access control lists (ACLs), while other transactions pass through traditional L4-L7 firewalls for enhanced security.

Yet another example use case for SDN controller **112** includes establishing a service provider point of presence (POP). A service provider may provide both intranet and internet WAN services for a number of enterprises. A service provider may also, or alternatively, provide datacenter networks, in addition to or in the alternative to WAN services. The level of security required for intra-enterprise traffic, for example between campus locations in different cities, may be quite different from the level of protection required for traffic between enterprises or for general internet traffic. In addition, the service provider may be asked by an enterprise to provide value-added services (such as security, denial of service (DOS) protection, traffic filtering, and/or wide area network (WAN) acceleration) on incoming or outgoing traffic based on source and destination. SDN controller **112** provides a highly manageable and flexible interface to direct flows according to a wide variety of service models.

In addition or in the alternative to the above, control unit **130** may be configured to utilize external triggers and information to change rules within programmable flow devices, e.g., switches of SDN **106**. In particular, path determination unit **134** may be configured to utilize security information **148** to develop paths through SDN **106** to provide protection to SDN **106**. SDN controller **112** may develop rules, stored in rules **142**, that define triggers associated with events that cause control unit **130** to program network devices of SDN **106** via SDN interface **152** in response to the triggers. SDN controller **112** may program the network devices of SDN **106** such that, in response to one of the triggers "firing," that is, becoming activated, the network devices modify forwarding information for a packet flow related to the external trigger that fired.

In addition, SDN controller **112** may be configured to direct specific packet flows (or direct duplicate versions of packets in a flow) to network recording devices or to network analysis devices, for additional visibility on packet flow patterns, or for logging, auditing and troubleshooting. These network recording devices and network analysis devices can write the packets corresponding to flows to permanent media for archival.

As an example, service device control unit **138** may configure a DDoS detection device of service devices **116** to send data to SDN controller **112** in response to the detection of a suspected DDoS attack. In response to such an attack, control unit **130** may reprogram switches of SDN **106** to mitigate the suspected attack. More particularly, in response to receiving data from the DDoS detection device that indicates that a DDoS attack is suspected, control unit **130** may reprogram devices of SDN **106** to mitigate the suspected attack. The use of such triggers may provide various advantages over conventional DMZs for networks, such as automation, increased flexibility, increased uptime (that is, business continuity), increased security, network flexibility, and reduction in costs due to added functionality to existing network hardware and software. As another example, an external routing stack (such as Quagga executing on a device separate from a switch) may act as an external trigger to change how and where flows are directed.

More particularly, control unit **130** may configure any of service devices **116** to send data representative of a particular event to SDN controller **112**, and control unit **130** may automatically reprogram one or more network devices of SDN **106** in response to such data. For example, security monitoring applications of service devices **116** may determine that a specific source port, destination port, source IP address, destination IP address, or the like should be acted upon. Alternatively, security monitoring applications may determine that, due to content or deep packet inspection, a specific type of traffic is malicious and should be blocked. In either case, the corresponding one of service devices **116** may send a message to SDN controller **112** representative of these determinations. As yet another example, a network performance device may monitor various performance metrics, such as latency, jitter, packet loss, or the like, and provide feedback data to SDN controller **112** based on these metrics. SDN controller **112** may respond by programming network devices of SDN **106** to perform a programmed action, such as allowing corresponding traffic, blocking corresponding traffic, mirroring corresponding traffic, redirecting corresponding traffic.

SDN controller **112** may receive data from service devices **116**, e.g., in relation to triggers for reprogramming devices of SDN **106**, in one or more ways. For example, SDN controller **112** may expose (that is, provide) an application programming interface (API) to service devices **116**. The API may be a one-way API or a two-way API. For the one-way API, service devices **116** push event data via the API to SDN controller **112**. In response, SDN controller **112** may apply a policy based on rules **142** to reprogram network devices of SDN **106**. In the example of the one-way API, SDN controller **112** does not provide any information to the one of service devices **116** that executed the API. SDN controller **112** may further log the event in event record **144**.

For the two-way API, one of service devices **116** may execute the API to send data to SDN controller **112**. As with the one-way API, SDN controller **112** may respond according to a policy based on one of rules **142**, and log the event in event record **144**. However, in the case of the two-way API, SDN controller **112** may respond to the one of service devices **116** that sent the data with an indication when SDN controller **112** has completed acting upon the received data, or if the function cannot be performed, provide indication of the reason why the function cannot be performed.

As another example, SDN controller **112** may specify times and file locations at which SDN controller **112** will retrieve data from service devices **116**. In this manner, SDN controller **112** may pull specific files that contain data regarding events for triggering SDN controller **112** to perform particular actions from service devices **116**. SDN controller **112** may repeat this file checking on a scheduled basis, and log various events from the files in event record **144**. In this manner, SDN controller **112** may determine a time for retrieval of a file from a service device, and retrieve the file from the service device at the determined time.

As yet another example, SDN controller **112** may subscribe to event logs of service devices **116**. SDN controller **112** may be configured to filter received event log data based on, e.g., date, time, application, event type, or frequency of event during a specific time horizon. In this manner, event record **144** may become synchronized, or at least one-way synchronized, with event logs of service devices **116**. In still another example, SDN controller **112** may receive external triggers via existing alerting mechanisms such as email, short message service (SMS), RESTful APIs, XMPP messages, SNMP alerts, or rich site summary (RSS). In this manner, SDN controller **112** may subscribe to one or more event logs from a service device, and retrieve data from the service device using the subscription.

Events sent to SDN controller **112** may trigger one or more of the SDN controller **112** actions on the same or different network, switch, and/or port than the network, switch, and/or port the initial traffic came from. For example, for DDOS, the identification of the DDOS attack may trigger a block action on the network under attack, trigger a block action to the upstream internet service provider (ISP) network (or a specific upstream device), and/or trigger a counter attack (redirection) from a different network, ISP, or network device (physical or virtual).

With each action, SDN controller **112** may perform various responsive actions. For example, control unit **130** may rebuild a new table detailing rules **142** that are enforced on each network device connected to SDN controller **112**. This information may then be presented to users via user interface **150**, e.g., using a graphical user interface, a human readable report including text, graphs, and/or charts, which may be used for internal or external audit purposes, and/or using an outbound API to communicate the new current state of SDN **106** to a third party security and compliance software application.

SDN controller **112** may then log the statistics from each network device as statistics **146**. Such statistics may include data indicative of programmed actions taken by the network devices in response to determining that the SDN controller **112** may further enforce the actions or provide an auditable log trail for security and compliance, and/or for troubleshooting.

SDN controller **112** may selectively share both the action information as well as the log analysis with the third party applications via a static file or API connection. Specifically where this may be useful is communicating the updated rules **142** to the application and sending an indication of the event that triggered the actions, to close the loop. A user may also choose to push all or a portion of event record **144** to a security information and event management (SIEM) device or system, such as Splunk or ArcSight.

In addition, or in the alternative, SDN controller **112** may be configured to test paths through SDN **106**. In particular, path verification unit **136** may verify whether paths are operating correctly (that is, determine whether devices are malfunctioning), e.g., by injecting test traffic into SDN **106**. Additionally or alternatively, path verification unit **136** may analyze statistics from packet flows through paths of SDN **106** to determine whether the paths (specifically, devices along the paths) are operating correctly. In this manner, SDN controller **112** may be configured to provide flow-based controls coupled to a server with special software to both consume and display packet flows as well as proprietary software than can inject test flows into the setup.

Based on the rule set for a specific device, including what traffic is allowed through, from what zones and expected targets, administrator **114** can infer the right type of test traffic that should be injected for both positive and negative testing of the device. Similarly, the inference can be made to determine the appropriate type of flow troubleshooting that includes the appropriate IP ranges to watch on, and the TCP/UDP services that the flowchain is meant to service.

In the case of traffic injection to test a path through SDN **106**, path verification unit **136** of SDN controller **112** may perform any of the following tasks:

- Infer from the flowchain the appropriate type of transmission control protocol (TCP) or uniform datagram protocol (UDP) services that are relevant to the chain, as well as the range of source and target IP addresses for this chain
- Create either UDP packet flows or TCP sessions that confirm to the traffic type inferred or discovered form the flowchain configuration
- Using an SDN device (e.g., a switch of SDN **106**), inject these flows or TCP sessions by temporarily inserting a rule into the rules table on the switch that will take the flows from SDN controller **112** and send them across the devices of SDN **106** (starting from the ingress device in the chain)
- Using an SDN device, insert flow rules to replicate (flow-span) these same traffic streams at each point in the flow chain. The replicated traffic may be directed (via SDN rules) to a collection device (or to SDN controller **112**) that can determine whether the test packets passed through each port on the switch that is part of the flowchain
- On the final exit device (prior to the end target), insert a flow rule that will drain all injected packets so the final devices (that is, devices external to SDN **106**) do not see any of the test traffic.

This capability can be presented as part of a flow-setup screen, such as "test all flows." SDN controller **112** may use the above mentioned methods to automatically ascertain whether devices within SDN **106** will pass a stream of packets as programmed. If the flow-chain is unable to pass the packets, SDN controller **112** may highlight the exact port/device on which the flows failed, using the techniques described above. Additionally or alternatively, SDN controller **112** may use the above methods to perform "negative testing," to ensure that flows that do not conform are in fact not forwarded, and are appropriately blocked.

In addition to the flow-injection capability, such a setup also provides SDN controller **112** the ability to "flow-span" (i.e. pick out a specific flow for replication) into SDN controller **112**. SDN controller **112** can run a capture-file dissector (like Wireshark) that processes the replicated flows and is able to present the captured data in a reasonable manner. As many such "inspection" setups as needed can be run, using flow-rules to configure which flows should be picked for inspection. When inspection is complete, the flow-rules can be turned off. None of the above steps negatively impact production traffic streams, and none of this requires manual re-cabling of the setup.

In addition, or in the alternative, path determination unit **134** may determine one or more redundant paths between two endpoints, e.g., to perform high availability. Data path (or flowpath) resiliency is a complex problem related to high availability, especially with respect to SDN networks such as SDN **106**. In order to focus development and test efforts, as well as to simplify the options to a tractable solution set, SDN controller **112** may perform any or all of the following three primary high availability implementations.

In general, each datapath switch of SDN **106** may be tagged by SDN controller **112** as being redundant or non-redundant. Generally, non-redundant elements are only found at the "leaf" points of a network, for example, access switches or vSwitches. Like controllers, a redundant switch can have the attribute of being master (active), slave (standby), or equal (load balanced) to one or more designated peer(s). The initial design assumes that the connectivity of peer switches is logically identical at the port level. In the future, redundancy attributes may be assignable at the port level, allowing for more flexible deployments. Once the resilient pairings are established, the SDN controller **112** user interface builds and enforces the switch/port correspondence.

A number of triggers can alert SDN controller **112** that a switch or other device of SDN **106** has experienced a failure. These include internal watchdog timers, link failures, various switch or route protocol (L2 ring resiliency protocols or L3 BFD protocols, for example), timeouts, disappearance of controller-generated debug/trace packets, or other external appliance-generated triggers.

One example solution is a hard failover. If any element of a specific FlowPath experiences a failure, the entire redundant portion of the path may be brought down (including links, if desired). The intended effect is that all traffic will transition to the secondary path. Flows that had been following the failed path may need to expire prior to the new connection being established from client to server.

In another example, SDN controller **112** may re-route traffic around the specific point of failure. Each element may be designated as either "fail-open," in which case traffic must be routed through the equivalent element on the redundant path, or "fail-closed," in which case traffic can simply bypass the failed element within the current path (if one exists, else the device is treated as fail-open). Depending on whether various network elements are promiscuous or act as L2 or L3 devices, appropriate modifications may need to be done to the MAC or IP addresses of each packet in the flow. Each one of the above actions reflects a decision that is represented within the object model and the graphical user interface.

In another example, it is assumed that redundant attached appliances handle failures as a pair independent of switches of SDN **106**. In this case, failures are simply reported to SDN controller **112** as informational, as no direct action needs to be taken.

SDN controller **112** may be configured to perform any or all of the techniques described above, alone or in any combination. Moreover, the set of elements shown in FIG. **2** for SDN controller **112** is merely one example. FIGS. **3** and **4** below illustrate other portrayals of devices and systems that may implement any or all of the techniques of this disclosure.

FIG. **3** is a conceptual diagram illustrating an example system **200** including various devices that may be used in accordance with the techniques of this disclosure. In this example, system **200** includes various network devices, including firewall **206**, router **208**, switch **210**, web proxy **212**, intrusion detection system (IDS) **214**, web server **216**, administrator ("admin") workstation **220**, and software defined network (SDN) controller **218**. Web clients **202** can access system **200** via a network, such as the Internet, e.g., Internet **204**. Internet **204** may include additional network devices not explicitly shown in FIG. **3**, such as routers, switches, hubs, gateways, security devices, or the like.

As shown in FIG. **3**, web clients **202** connect to Internet **204**. Internet **204** provides access to system **200**, which implements the techniques of this disclosure. For example, network devices of system **200** form an SDN controlled by SDN controller **218**. SDN controller **218** may generally correspond to SDN controller **112** of FIGS. **1** and **2**. In particular, SDN controller **218** (in this example) programs one or more switches (e.g., Pica8 3290 switches, IBM G8264), such as switch **210**, to direct traffic through an SDN to other switches, service devices (e.g., web proxy **212**, IDS **214**, and/or web server **216**). In general, SDN controller **218** may be configured to perform any or all of the techniques described above, alone or in any combination.

SDN controller **218** is configured to program various network devices, such as switch **210**, in accordance with one or more of the techniques of this disclosure. Although the example of FIG. **3** illustrates only one switch, i.e., switch **210**, it should be understood that system **200** may include many interconnected switches or other programmable network devices. Likewise, service devices, such as web proxy **212**, IDS **214**, and web server **216** may be coupled to various switches (and not necessarily the same switch).

In some examples, SDN controller **218** determines connections between network devices (e.g., switches) in a software defined network. For example, SDN controller **218** may cause switches of system **200** to execute a protocol, such as the spanning tree protocol (or a proprietary protocol), to discover connections between switches. SDN controller **218** may determine connections between network devices that form an SDN for system **200**, which may include switches similar to switch **210** and service devices, such as web proxy **212**, IDS **214**, and web server **216**.

A user, such as an administrator, determines service devices, such as web proxy **212**, IDS **214**, and web server **216**, to which particular devices (e.g., users of web clients **202**) request access. The user may interface with administrator workstation **220** to configure SDN controller **218**, to provide information indicative of users and services required for those users. SDN controller **218**, in turn, may develop packet flows that ensure web traffic from particular ones of web clients **202** (and, potentially, certain applications executed by web clients **202** and/or with certain destinations) are directed through appropriate service devices. In other words, based on the connections determined between network devices in an SDN of system **200**, SDN controller **218** may determine one or more paths for network traffic between the network devices. Likewise, SDN controller **218** may program the network devices to direct network traffic along the paths.

In some examples, SDN controller **218** may be configured to program one or more paths through the SDN of system **200** for the same packet flow. That is, the paths for a packet flow may include a primary path and one or more backup paths for the packet flow. In this manner, when a device along the primary path malfunctions, SDN controller **218** may send data to the devices of the SDN (e.g., devices similar to switch **210**) to forward traffic for the packet flow along one of the backup paths. The backup paths may be formed initially or on the fly. For example, the backup path to a primary path may avoid as many of the network devices along the primary path as possible, which in some cases may exclude all of the devices along the primary path. In other words, the devices along the primary path may be entirely different than the devices along the backup path. That is, the intersection of the

set of devices in the primary path with the set of devices in the backup path yields the empty set.

Alternatively, the backup path may simply exclude any malfunctioning devices of the primary path, but otherwise include the other devices of the primary path that are not determined to be malfunctioning. As still another example, the backup path may include all devices of the primary path up to the malfunctioning device, and then may or may not include other devices along the primary path. In some cases, SDN controller **218** may determine when a network device along the primary path has failed. Alternatively, SDN controller **218** may program a service device to monitor network devices of the SDN and to determine when one or more of the network devices have failed, to cause switchover between a primary path and a backup path.

SDN controller **218** may be configured to program a switch, such as switch **210**, to send packets of a particular packet flow to a service device, e.g., one of web proxy **212**, IDS **214**, and web server **216**. For example, switch **210** is communicatively coupled to web proxy **210** by connection **222**, which may represent ports **7** and **8**. One of web clients **202** may request data from a web server, which may be internal to or external to system **200**. Web proxy **212** may be configured to act as a proxy device to the web server. That is, SDN controller **218** may program switch **210** to direct network traffic destined for the web server to web proxy **212** via connection **222**, instead. Web proxy **212** may then act on behalf of the web server, e.g., by caching resources stored by the web server and responding to requests for the resources on behalf of the web server.

As another example, switch **210** is communicatively coupled to IDS **214** via connections **224**, **226**. Connection **224** may represent port **9**, while connection **226** may represent port **10**. After SDN controller **218** determines that a particular packet flow should be inspected for intrusion detection, SDN controller **218** may program switch **210** to direct packets of the packet flow to IDS **214**. SDN controller **218** may further configure IDS **214** to send data back to switch **210**, such as data indicating whether packets of the packet flow represent a network attack and/or data of the packet flow after the data has been inspected. In some examples, data of the packet flow representing an attack may be dropped or forwarded to a containment device, rather than being forwarded along the original packet flow. The data indicating whether the packet flow represents an attack may be forwarded back to SDN controller **218**, to admin workstation **220**, to one of web clients **202**, or to another device, e.g., for report generation. The device that receives the data, e.g., SDN controller **218**, may generate and/or present a report indicative of malicious traffic to a user, e.g., via admin workstation **220**.

As yet another example, switch **210** is communicatively coupled to web server **216** via connection **228**. Connection **228** may represent ports **4** and **6**. Web server **216** may generally store and/or manage network accessible resources, such as files, databases, printers, or the like. Web clients **202** may access web server **216** via the SDN of system **200**.

As noted above, SDN controller **218** can program and reprogram network devices that make up the SDN of system **200** dynamically. That is, after determining physical connections between network devices, SDN controller **218** may program the network devices to forward network traffic along various paths through the SDN, that is, along various network paths. In some instances, it is important to verify that the network devices are forwarding traffic along a path correctly, e.g., to ensure that the network devices are operating correctly. Therefore, SDN controller **218** may be configured to inject test traffic into the SDN to test one or more of the packet flows or paths.

For example, SDN controller **218** may be configured to program network devices of the SDN (e.g., including switch **210**) to form a path though the SDN (where the path may correspond to a packet flow). This may cause the network devices to forward packets of the packet flow along the path. SDN controller **218** may then send a packet to a first network device along the path as a test packet. The network devices along the path may be configured to send confirmation messages to SDN controller **218** after receiving the test packet. After the last network device along the path receives the test packet, the last network device may forward the packet back to SDN controller **218** or drop the packet and send a confirmation message to SDN controller **218**. When SDN controller **218** determines that a particular network device along the path did not confirm receipt of the test packet within a particular amount of time, SDN controller **218** may reattempt the test packet or determine that the device that did not confirm the packet is malfunctioning.

In response to the determination that a device along a path is malfunctioning, SDN controller **218** may reprogram devices along the path to direct traffic around the malfunctioning device, such that the packet flow can remain operable. Additionally or alternatively, SDN controller **218** may send an alert to a user, e.g., via admin workstation **220**, that a device is malfunctioning. More generally, SDN controller **218** may present a report indicative of the status of a packet flow, e.g., whether network devices are forwarding packets of the packet flow properly.

SDN controller **218** may be configured to utilize a particular data model to represent devices of the SDN, such as SDN controller **218** itself (and any other SDN controllers), switch **210** (and other switches not shown in FIG. **3**), web proxy **212**, IDS **214**, and web server **216**. The data model may include objects (e.g., in accordance with an object oriented programming paradigm) that represent the various devices forming the SDN of system **200**. For example, the data model may include software-based controller objects that represent SDN controllers, such as SDN controller **218**. The data model may also include switch description objects for each of one or more switches, such as switch **210**.

The controller-objects may include data describing an instance name, a server hostname, and server host port for respective SDN controllers. That is, one instantiation of a controller-object may include an instance name, a server hostname, and a server host port for SDN controller **218**. An example of an instance name would be "datacenter-sdn-controller-primary-a", a server hostname would be "controller-.lab.domain.com," and an example server port number would be "6688."

The switch description objects may include data describing a primary controller for the respective switch, a switch identifier, a switch media access control (MAC) address for the respective switch, an Internet protocol (IP) address for the respective switch, and an array of port description objects for each physical port on the respective switch. For example, for switch **210**, a switch description object may include data identifying SDN controller **218** as the primary controller for switch **210**, an identifier for switch **210**, a MAC address for switch **210**, an IP address for switch **210**, and an array of port description objects that describe ports of switch **210**, such as the ports forming connections **222**, **224**, **226**, and **228**. Each of the port description objects may include data describing a port number for the respective port, a port identifier for the respective port, a MAC address of the respective port, and a

description of capabilities for the respective port (e.g., a media type for the respective port, a speed for the respective port, whether the respective port is half duplex or full duplex, whether the port supports auto-negotiation, or the like).

SDN controller **218** may further monitor devices of the SDN of system **200** to determine whether changes have occurred. For example, SDN controller **218** may determine whether additional connections have been added between network devices, whether links have failed, whether network devices have failed, or whether network devices have been added. When such changes occur, SDN controller **218** may log data describing the changes in an event history. In addition, SDN controller **218** may reprogram the network devices to account for such changes, e.g., to incorporate new links and/or new network devices into paths, or to route traffic around failed links and failed network devices.

In this manner, SDN controller **218** may be configured to operate in a manner substantially similar to SDN controller **112** of FIGS. **1** and **2**. That is, SDN controller **218** may implement any or all of the techniques of SDN controller **112**, alone or in any combination.

FIG. **4** illustrates various devices and services organized according to the "control plane" and the "data plane." In general, devices and services of the control plane manage devices of the data plane to cause the devices of the data plane to forward data traffic between various network destinations. In conventional routers, each router includes functionality for both the control plane and the data plane, and the same is true for conventional switches. However, in accordance with the techniques of this disclosure, the control plane can be entirely separated from the data plane, such that an SDN controller, such as SDN controller **112**, can program devices of the data plane, such as network switches, to perform the techniques of this disclosure.

FIG. **4** is a conceptual diagram illustrating an example flow management system **250** including various components that may operate in accordance with the techniques of this disclosure. Flow management system **250** (also referred to as "system **250**") includes control plane **252** and data plane **280**. In general, control plane **252** includes components that relate to control information, e.g., routing information relating to packet flows and paths through an SDN. Data plane **280** generally includes components that send, forward, and/or receive data in accordance with control information from components of control plane **252**.

In the example of FIG. **4**, control plane **252** includes applications **254**, user interface **258** (which defines policy editor **260** and system monitor **262**), flow management server **256**, SDN controller **270** (which may correspond to an OpenFlow controller), resource manager **264**, authentication engine **266**, policy engine **268** (e.g., an XACML policy engine), PKI unit **272**, active directory **274**, and LDAP **276**. Data plane **280**, in this example, includes TCP client **284**, multicast source **286**, network switches **282**, and server **288**. TCP client **284** may correspond to any client device, e.g., client device **102** (FIG. **1**) or one of web clients **202** (FIG. **3**). Multicast source **286** represents a source device that sends data via a multicast protocol, while server **288** represents a server device can provide data in accordance with one or more various protocols, e.g., hypertext transfer protocol (HTTP), file transfer protocol (FTP), or the like.

OpenFlow is an example of an SDN protocol. That is, in some examples, SDN controller **270** may conform to the OpenFlow protocol. However, it should be understood that other protocols may be used in conjunction with a software defined network. In general, any protocol that gives access to the forwarding plane or data plane of a networking device (e.g., a switch or router) to a remote device over a network may be used in accordance with the techniques of this disclosure, other example protocols include XMPP, RESTful APIs, Cisco OnePK, IETF I2RS (Interface to Routing Systems).

In the example of FIG. **4**, flow management server **286** may be configured to perform the techniques of this disclosure. Additionally or alternatively, SDN controller **270** may be configured to perform the techniques of this disclosure. Alternatively, flow management server **256** and SDN controller **270** may work together to perform the techniques of this disclosure. Thus, any or all of flow management server **256** and/or SDN controller **270** may correspond substantially to SDN controller **112** of FIGS. **1** and **2**, or to SDN controller **218** of FIG. **3**. Flow management server **256** is described as performing the techniques of this disclosure below for purposes of explanation, but it should be understood that SDN controller **270** may implement these techniques, alone or in combination with flow management server **256**, in some examples.

In accordance with the techniques of this disclosure, flow management server **256** programs network switches **282**, based on connections between network switches **282**, to form paths through an SDN. For example, flow management server **256** may program network switches **282** to establish a path between TCP client **284** and server **288**, and/or a path between TCP client **284** and multicast source **286**. In some examples, flow management server **256** may program network switches **282** to define multiple paths, e.g., a primary path and one or more backup paths, as discussed above. Likewise, flow management server **256** may send test traffic through network switches **282** to test one or more of the paths. Data plane **280** may include one or more service devices (such as web proxy devices, IDS devices, and/or web servers), to which network switches **282** may direct network packets. Server **288** may represent a service device of an SDN controlled by control plane **252**, in some examples.

FIG. **5** is a flowchart illustrating an example method for constructing paths in an SDN. The method of FIG. **5** may be performed by an SDN controller, such as SDN controller **112** (FIGS. **1** and **2**) or SDN controller **218** (FIG. **3**). Likewise, the method of FIG. **5** may be performed by flow management server **256** and/or SDN controller **270**, alone or in combination. For purposes of explanation, the method of FIG. **5** is primarily described with respect to SDN controller **112**, although it should be understood that other devices, such as those mentioned above, may be configured to perform the method of FIG. **5**.

Initially, SDN controller **112** determines connections between network devices of an SDN (**300**). For example, network devices of the SDN (such as network devices **108**, **110**, which may correspond to network switches) may be configured to send acknowledgements to SDN controller **112** in response to receiving packets from SDN controller **112**, as well as to forward the packets to other network devices to which the network devices are communicatively coupled. By analyzing the responses from the network devices, SDN controller **112** may determine connections between network devices of an SDN. For example, all ports on one network device **110** might be programmed to send all incoming packets of a certain type to the SDN Controller **112**. By sending an appropriately crafted packet (of the same type) on all ports of **108**, the SDN Controller can determine how Network Device **108** is connected to Network Device **110**.

SDN controller **112** may also determine whether certain network devices of the SDN are service devices (**302**). In particular, SDN controller **112** may determine whether a network device of the SDN can provide services, such as security

services, proxying services, hosting services, or the like. This information may be advertised by the network devices themselves, or may be input by a user (e.g., an administrator).

In some examples, SDN controller **112** forms a data model representative of devices in the SDN, in which case SDN controller **112** may instantiate controller objects in software for itself and any other SDN controllers, and instantiate switch description objects for each of the network devices (e.g., switches) of the SDN. Furthermore, SDN controller **112** may form an array of port description objects, for a particular switch description object, that each describe respective ports of the switch modeled by the switch description object. The port description objects may indicate a media type for the respective port, a speed for the respective port, whether the respective port is half duplex or full duplex, and whether the port supports auto-negotiation.

In some examples, the port description objects additionally include data describing a device to which the port is connected, e.g., an identifier for a controller, switch, or other network device to which the port is connected. Additionally or alternatively, SDN controller **112** may store other data defining connections between devices of the SDN in the data model representative of the SDN. For example, SDN controller **112** may construct the data model to include a list (e.g., an array) of pointers or identifiers, for a particular switch description object, indicative of switches, controllers, or other network devices (e.g., service devices) to which the switch is connected. In addition, SDN controller **112** may use other data structures (e.g., a tree or graph) to determine the potential relationships in physical or virtual connectivity between these network devices.

In the example of FIG. **5**, SDN controller **112** determines zones for packet flows through the network devices forming the SDN (**304**). The zones generally correspond to packet flows, that is, paths through the SDN followed by particular packets. SDN controller **112** may store data defining the zones in the data model discussed above. The data defining the zones may specify entities (e.g., users, devices, or the like) that have access to each zone. Thus, SDN controller **112** may program network devices of the SDN such that entities that are not authorized to access a particular zone are prevented from accessing the zone. SDN controller **112** may specify a zone using packet header field values, such as a source port, a destination port, a source IP address, a destination IP address, a virtual local area network (VLAN) tag, multiprotocol label switching (MPLS) labels, a packet protocol, and/or an IP subnet. In some cases, SDN controller **112** may specify whether a corresponding packet flow for a zone is suspect or malicious and construct the zone such that packets of the packet flow are prevented from reaching an intended destination. As noted above, zones may be ordered based on priority values when overlap occurs.

Furthermore, SDN controller **112** determines trusted packet flows (**306**). For example, SDN controller **112** may determine that certain packet flows can be trusted based on security controls, and that other packet flows cannot be trusted based on the security controls. That is, SDN controller **112** may determine whether a packet flow can be trusted based on values of packet headers for the packet flows, e.g., values of headers at various layers of the OSI model (e.g., any or all of layers 2-7 of the OSI model). In some examples, SDN controller **112** may omit any or all of steps **302**, **304**, and **306**, e.g., omitting any or all of determination of service devices, determination of zones, and/or determination of trusted packet flows.

SDN controller **112** may then determine paths through the SDN for various packet flows based on the connections between the network devices, the services offered by the service devices, the determined zones, and/or the trusted packet flows (**308**). For example, SDN controller **112** may determine that a particular customer has subscribed to a particular service (e.g., IDS) and, therefore, direct packet flows from a client device for that customer through an IDS device. In other words, SDN controller **112** may construct a path through the SDN for that customer that includes at least one IDS device. Directing traffic to a service device is described in greater detail with respect to FIG. **6**, below. As another example, when a client device is not trusted, SDN controller **112** may construct a path through the SDN that directs packets associated with the untrusted client device along a path designated for "untrusted" network traffic.

Determining the paths generally includes determining, from a first network device of the SDN, subsequent "next hop" network devices through the SDN. Thus, SDN controller **112** may analyze connections between the network devices (e.g., switches and service devices) and direct traffic from one device to another, assuming that the devices are communicatively coupled and cause the traffic to travel substantially in the direction of the destination of the traffic.

SDN controller **112** may then program the network devices to forward traffic along the determined paths (**310**). In conventional routers, control plane elements of a router program a forwarding information base (FIB) of a data plane of the router. However, SDN controller **112** represents a control plane element that can program data plane elements (e.g., switches) remotely, that is, without being part of or even directly coupled to the data plane elements. For example, SDN controller **112** may program any or all of network devices **108**, **110** and service devices **116** to forward network traffic having particular header data (e.g., source IP address, destination IP address, source port, destination port, protocol, MPLS label(s), VLAN tags, or the like) to a particular next hop (that is, next network device). Moreover, in accordance with the techniques of this disclosure, SDN controller **112** may program network devices of an SDN to forward traffic according to network paths that were determined based on one or more of connections determined between the network devices, service devices among the network devices, zones for packet flows through the network devices, and/or trusted or untrusted packet flows.

After programming the network devices of the SDN, SDN controller **112** may monitor the network devices (**312**), e.g., to determine whether the network devices are performing according to the programming and determined paths. As one example, SDN controller **112** may inject test traffic into the SDN to determine whether the network devices are forwarding data of a packet flow according to a programmed path (e.g., as explained in greater detail with respect to FIG. **7**, below). In some cases, SDN controller **112** may reprogram network devices that are not forwarding data correctly, that is, that are operating improperly (**314**), assuming such devices can be reprogrammed. In addition, or in the alternative, SDN controller **112** may generate a report indicative of network devices that are operating properly or improperly, reprogram other devices to direct traffic around a malfunctioning device, send an alert to an administrator indicative of the malfunctioning device, direct devices to send traffic that would otherwise be sent through the malfunctioning device along a backup path, update a data model to indicate that a device is malfunctioning, or take other such actions. Utilizing a backup path for a primary path is described in greater detail with respect to FIG. **8**, below.

In this manner, the method of FIG. **5** represents an example of a method including determining, by a controller device for

a software defined network, connections between network devices in the software defined network, determining, by the controller device, one or more paths for network traffic between the network devices based on the determination of the connections, and programming, by the controller device, the network devices to direct network traffic along the one or more paths.

The method of FIG. **5** also represents an example of a method including obtaining, by a controller device of a software defined network (SDN), data representative of physical network devices in the SDN, wherein the physical network devices comprise one or more switches and one or more controllers including the controller device, instantiating, by the controller device, software-based controller objects for each of the one or more controllers, wherein the software-based controller objects each comprise data representative of a respective instance name, a respective server hostname, and a respective server host port, instantiating, by the controller device, software-based switch description objects for each of the one or more switches, wherein the software-based switch description objects each comprise data representative of a respective primary controller corresponding to a controller of the one or more controllers, a respective switch identifier, a respective switch media access control (MAC) address, a respective Internet protocol (IP) address, and a respective array of port description objects for each physical port on the respective switch, and managing, by the controller device, at least some of the switches using the switch description objects and the controller objects.

FIG. **6** is a flowchart illustrating an example method for directing network traffic of an SDN to a service device. The method of FIG. **6** may be performed by an SDN controller, such as SDN controller **112** (FIGS. **1** and **2**) or SDN controller **218** (FIG. **3**). Likewise, the method of FIG. **6** may be performed by flow management server **256** and/or SDN controller **270**, alone or in combination. For purposes of explanation, the method of FIG. **6** is primarily described with respect to SDN controller **112**, although it should be understood that other devices, such as those mentioned above, may be configured to perform the method of FIG. **6**.

Initially, SDN controller **112** may program network devices to send packets to a service device (**330**), e.g., in accordance with the method of FIG. **5**. The service device may comprise one of service devices **116**. The service device may be any device that can transform the flows of packets and perform appropriate functions on them. Typically, service devices operate at OSI layers four to seven (Layers 4-7), but might operate at other layers. For example, the service device may be one of a distributed denial of service (DDoS) service device, a malware detection system, an intrusion detection service (IDS) device, an intrusion prevention service (IPS) device, a network anti-virus device, a network packet capture and analysis device, a honeypot device, a reflector device, a tar pit device, a domain name service (DNS) device, a web proxy device, a mail proxy device, and an anti-spam device.

In addition, SDN controller **112** may program network devices to receive packets from the service device (**332**). More particularly, programming the network devices may include programming network devices to receive packets from a service device and forward the packets along the path that was determined for the packet flow corresponding to the packets. In some instances, the network device that forwards a packet to a service device may be the same network device that receives the packet from the service device. In such instances, SDN controller **112** may program a forwarding information base (FIB) of the network device such that the network device analyzes not only a packet header of the packet to determine a next hop for the packet, but also an input interface (e.g., an input port) by which the packet is received. That is, the FIB may include a forwarding table that includes data defining a correspondence from packet header information and an input interface to an output interface, for a packet flow.

In addition, SDN controller **112** may configure the service device to send service-related data to one or more network devices (**334**). The service-related data may cause the network devices to change a path along which the packet is forwarded. For example, when the service device is a security device (e.g., a firewall or an IDS), if the security device determines that one or more packets of a packet flow are malicious, the security device may send service data indicating that the packet flow includes malicious data. SDN controller **112** may program the network devices of the SDN to perform a programmed action based on the service-related data (**336**). For example, SDN controller **112** may program network devices to, in response to an indication that packets of a packet flow include malicious data, forward packets of the packet flow to a destination of the packet flow, forward packets of malicious packet flows to a collection device for further analysis, cause network devices to drop packets of the malicious packet flows, send a close session message to devices from which packets of the malicious packet flows were received, block the packets of the packet flow, mirror copies of the packets of the packet flow to a second service device while forwarding the packets of the packet flow to the destination of the packet flow, redirect the packets of the packet flow to a third service device, transform one or more values of headers of the packets, and/or encapsulate the packets with a particular header, or other such actions.

Moreover, SDN controller **112** may configure the service devices to send the service-related data to SDN controller **112** and program the network devices of the SDN to send reporting data to SDN controller **112** indicative of the programmed action that was performed. Thus, when one of the network devices performs a particular programmed action in response to service-related data, SDN controller **112** may receive reporting data from the network device indicative of the programmed action (**338**). SDN controller **112** may generate a report for a user that consolidates this data in a human-readable format.

In this manner, the method of FIG. **6** represents an example of a method including programming, by a controller device for a software defined network (SDN), a first network device of the SDN to send packets of a packet flow to a service device, and programming, by the controller device, one or more network devices of the SDN to perform a programmed action on packets of the packet flow based on data received from the service device for the packet flow.

FIG. **7** is a flowchart illustrating an example method for using test traffic to determine whether an SDN packet flow is operating correctly. The method of FIG. **7** may be performed by an SDN controller, such as SDN controller **112** (FIGS. **1** and **2**) or SDN controller **218** (FIG. **3**). Likewise, the method of FIG. **7** may be performed by flow management server **256** and/or SDN controller **270**, alone or in combination. For purposes of explanation, the method of FIG. **7** is primarily described with respect to SDN controller **112**, although it should be understood that other devices, such as those mentioned above, may be configured to perform the method of FIG. **7**.

Initially, SDN controller **112** may program network devices of an SDN to utilize a path through the SDN for a particular packet flow (**350**). SDN controller **112** may program the network devices as described with respect to FIG. **5**

above. SDN controller **112** may then send test packets along the packet flow (**352**). For example, SDN controller **112** may temporarily program network devices along the path for the packet flow with a rule that causes the network devices to forward packets of the packet flow as usual, and to send an acknowledgement of receipt of the packet to SDN controller **112**. In some examples, SDN controller **112** programs a last network device along the path to forward packets of the packet flow being tested to a collection device, which may be a service device within the SDN. SDN controller **112** may then send a test packet of the packet flow to a first network device along the path for the packet flow.

SDN controller **112** then determines whether the test packets are sent correctly (**354**), e.g., by monitoring acknowledgements from the network devices of the SDN along the path for the packet flow. When a device along the path does not acknowledge receipt of the test packets within a particular amount of time, SDN controller **112** may determine that the device, or a previous device, is not functioning correctly. On the other hand, SDN controller **112** may determine that all devices are functioning correctly (and, hence, that the test packet was sent correctly) when all devices acknowledge receipt of the test packet. SDN controller **112** may then present a report based on the determination of whether the test packet was sent correctly (**356**). In addition, SDN controller **112** may reprogram the network devices of the SDN to avoid malfunctioning network devices.

In this manner, the method of FIG. **7** represents an example of a method including programming, by a controller device for a software defined network (SDN), a set of network devices of the SDN to form a path through the SDN and to send data representative of packets sent along the path to the controller device, sending, by the controller device, packets of a packet flow corresponding to the path to one of the set of network devices, determining, by the controller device, whether the set of network devices is properly forwarding the packets of the packet flow along the path based on data received from the set of network devices, and presenting a report representative of the determination.

FIG. **8** is a flowchart illustrating an example method for using one or more backup paths to a primary path through an SDN. The method of FIG. **8** may be performed by an SDN controller, such as SDN controller **112** (FIGS. **1** and **2**) or SDN controller **218** (FIG. **3**). Likewise, the method of FIG. **8** may be performed by flow management server **256** and/or SDN controller **270**, alone or in combination. For purposes of explanation, the method of FIG. **8** is primarily described with respect to SDN controller **112**, although it should be understood that other devices, such as those mentioned above, may be configured to perform the method of FIG. **8**.

Initially, SDN controller **112** may program primary paths for network devices (**370**). Likewise, SDN controller **112** may program one or more backup paths to the primary paths for the network devices (**372**). SDN controller **112** may be configured with one or more strategies for determining the backup paths. In general, the primary path corresponds to a sequence of connected devices, such that device N along the path is communicatively coupled to device N+1 of the path. In one example, SDN controller **112** may determine a backup path that avoids all of the devices of the primary path. In other words, the intersection of the set of devices forming the primary path and the set of devices forming the backup path yields the empty set. In another example, SDN controller **112** may determine a backup path that includes at least some of the devices of the primary path, but omits one or more of the devices of the primary path. In such an example, SDN controller **112** may determine a plurality of backup paths to the primary path, each of the backup paths omitting one or more different devices of the primary path than the other backup paths. Thus, the backup paths may include devices that are not included along the primary path. Programming the network devices may be performed in a manner substantially similar to the method described with respect to FIG. **5**.

In general, programming the primary path and the backup path(s) may be achieved by programming the network devices to direct traffic along the primary path and, in the event of a failure of a device along the primary path, to direct traffic along a backup path. In some examples, SDN controller **112** monitors the network devices (**374**) to determine whether such a failure has occurred. In other examples, SDN controller **112** may program a service device to monitor the network devices to determine whether such a failure has occurred. The service device may comprise a physical service device, a multi-tenant service device, or a virtual service device, as explained above. In either case, SDN controller **112** may program the network devices to periodically send data to the monitoring device (e.g., SDN controller **112** or a service device), so that the monitoring device is able to determine whether one of the network devices along the primary path has failed (**376**).

In the event that there has not been a failure of a network device along the primary path ("NO" branch of **376**), the monitoring device may continue to monitor the network devices (**374**). On the other hand, in the event that there has been a failure of a network device along the primary path ("YES" branch of **376**), SDN controller **112** (or a service device acting as the monitoring device) may configure the network devices to use the backup path for the failed primary path (**378**). In effect, this causes the backup path to become the primary path, and therefore, the monitoring device may then continue to monitor the network devices along the new primary path (i.e., the backup path to the original, failed primary path) (**374**).

In some examples, the network devices may be pre-programmed with the primary path and the backup paths, as shown in FIG. **8**. In other examples, SDN controller **112** may program the network devices to forward traffic along the primary path, and in response to a failure of a network device along the primary path, to forward traffic along the backup path.

In this manner, the method of FIG. **8** represents an example of a method including determining, by a controller device for a software defined network (SDN), a primary path for network traffic between network devices of the SDN, determining, by the controller device, a backup path to the primary path for the network traffic between the network devices of the SDN, and, in response to a failover event, programming the network devices to switch from the primary path to the backup path.

FIG. **9** is a flowchart illustrating an example method for performing authentication and authorization for a client device that is attempting to communicate with an SDN. The method of FIG. **9** may be performed by an SDN controller, such as SDN controller **112** (FIGS. **1** and **2**) or SDN controller **218** (FIG. **3**). Likewise, the method of FIG. **9** may be performed by flow management server **256** and/or SDN controller **270**, alone or in combination. For purposes of explanation, the method of FIG. **9** is primarily described with respect to SDN controller **112**, although it should be understood that other devices, such as those mentioned above, may be configured to perform the method of FIG. **9**.

As discussed above, SDN controller **112** may be configured to utilize a public key infrastructure (PKI)-based protocol, such as 802.1X, to authenticate and/or authorize a client

device, e.g., client device **102**. However, rather than using this 802.1X session to enforce policies, SDN controller **112** may be configured to program network devices of the SDN to enforce the policies. Thus, initially, SDN controller **112** may begin an authentication session with a client device (**390**), e.g., client device **102**. During the authentication session, SDN controller **112** may receive authentication credentials from client device **102** (**392**). The credentials may be in accordance with the Lightweight Directory Access Protocol (LDAP), Microsoft Active Directory, a public key certificate in accordance with PKI, or the like. After authenticating client device **102**, SDN controller **112** may terminate the authentication session (**394**).

SDN controller **112** may determine a geographic location of client device **102** (**396**). SDN controller **112** may determine the geographic location using any of a variety of possible mechanisms, such as global position system (GPS) information (assuming client device **102** is a mobile device), domain name service (DNS) information, an Internet protocol (IP) address of client device **102**, and/or other such information. The policies may correspond to fine-grain policies that are applied on a per-packet-flow basis, and may be based on any or all of a user identity, a client device identity, an application being executed by the client device, and/or the geographic location of client device **102**. Thus, SDN controller **112** may determine applicable policies for client device **112** (**398**), e.g., based on any or all of the user identity, the client device identity, the application, and the geographic location of client device **102**.

SDN controller **112** may then program network devices of the SDN to enforce the policies (**400**). For example, SDN controller **112** may program the network devices to direct packet flows including client device **102** along various paths, depending on the applicable policies for the packet flows. That is, certain packet flows originating from client device **102** or destined for client device **102** may be forwarded along different paths than other packet flows originating from or destined for client device **102**, based on, e.g., the user of client device **102**, an application, corresponding to the packet flow, that is being executed by client device **102**, and/or a geographic location of client device **102**. Likewise, packet flows for the same user using client device **102** and the same application may be directed along different paths through SDN **106** based on the geographic location of client device **102**. Again, the policies may correspond to any combination of these factors, and may include additional or alternative factors in other examples.

In some examples, SDN controller **112** further performs deep packet inspection (DPI) on packets from client device **102** (**402**). For example, SDN controller **112** may inspect one or more preliminary packets of packet flows originating from or directed to client device **102**, and after determining that the packet flows are not malicious (after a predetermined number of packets), stop inspecting the packet flows. Alternatively, SDN controller **112** may program network devices of SDN **106** to forward a predetermined number of packets of the packet flows originating from or destined for client device **102** through a deep packet inspection service device, which may correspond to one of service devices **116**.

The techniques described in this disclosure may be implemented, at least in part, in hardware, software, firmware or any combination thereof. For example, various aspects of the described techniques may be implemented within one or more processors, including one or more microprocessors, digital signal processors (DSPs), application specific integrated circuits (ASICs), field programmable gate arrays (FPGAs), or any other equivalent integrated or discrete logic circuitry, as well as any combinations of such components. The term "processor" or "processing circuitry" may generally refer to any of the foregoing logic circuitry, alone or in combination with other logic circuitry, or any other equivalent circuitry. A control unit comprising hardware may also perform one or more of the techniques of this disclosure.

Such hardware, software, and firmware may be implemented within the same device or within separate devices to support the various operations and functions described in this disclosure. In addition, any of the described units, modules or components may be implemented together or separately as discrete but interoperable logic devices. Depiction of different features as modules or units is intended to highlight different functional aspects and does not necessarily imply that such modules or units must be realized by separate hardware or software components. Rather, functionality associated with one or more modules or units may be performed by separate hardware or software components, or integrated within common or separate hardware or software components.

The techniques described in this disclosure may also be embodied or encoded in a computer-readable medium, such as a computer-readable storage medium, containing instructions. Instructions embedded or encoded in a computer-readable medium may cause a programmable processor, or other processor, to perform the method, e.g., when the instructions are executed. Computer readable storage media may include random access memory (RAM), read only memory (ROM), programmable read only memory (PROM), erasable programmable read only memory (EPROM), electronically erasable programmable read only memory (EEPROM), flash memory, a hard disk, a CD-ROM, a floppy disk, a cassette, magnetic media, optical media, or other computer readable media.

Various examples have been described. These and other examples are within the scope of the following claims.

What is claimed is:

1. A method comprising:

determining, by a controller device for a software defined network (SDN), a primary path for network traffic between network devices of the SDN;

storing, by the controller device, data indicating that one or more network devices along the primary path comprise master network devices;

determining, by the controller device, a backup path to the primary path for the network traffic between the network devices of the SDN;

storing, by the controller device, data indicating that one or more network devices along the backup path comprise slave network devices, wherein each of the master network devices of the primary path corresponds to one or more of the slave network devices of the backup path; and

in response to a failover event, configuring the network devices to switch from the primary path to the backup path, wherein configuring comprises, based on the stored data, configuring each of the network devices to forward packets to the slave network device corresponding to the primary network devices and not to forward the packets to the master network devices.

2. The method of claim **1**, wherein the failover event comprises a failure of one of the network devices along the primary path.

3. The method of claim **1**, wherein configuring the network devices comprises programming the network devices to avoid all of the network devices along the primary path.

4. The method of claim 1, wherein a first set of the network devices of the SDN form the primary path, wherein a second set of the network devices of the SDN form the backup path, and wherein the first set and the second set are mutually exclusive.

5. The method of claim 1, wherein a first set of network devices of the SDN form the primary path, wherein a second set of the network devices of the SDN form the backup path, and wherein the second set of network devices includes all but one of the network devices of the first set of network devices.

6. The method of claim 5, wherein determining the backup path comprises determining a plurality of backup paths to the primary path, wherein each of the plurality of backup paths includes a different subset of the first set of network devices and at least one respective network device of the SDN that is not in the first set of network devices.

7. The method of claim 1, wherein configuring the network devices comprises programming, by the controller device, a service device to determine when the failover event has occurred and to cause the service device to configure the network devices to switch from the primary path to the backup path in response to the failover event.

8. The method of claim 7, wherein the service device comprises one of a physical service device, a multi-tenant service device, or a virtual service device.

9. A controller device for a software defined network (SDN), the controller device comprising:

one or more network interfaces configured to communicate with network devices of the SDN; and

one or more processors configured to determine a primary path for network traffic between network devices of the SDN, store data indicating that one or more network devices along the primary path comprise master network devices, determine a backup path to the primary path for the network traffic between the network devices of the SDN, store data indicating that one or more network devices along the backup path comprise slave network devices, wherein each of the master network devices of the primary path correspond to one or more of the slave network devices of the backup path, and, in response to a failover event, configure the network devices through the one or more network interfaces to switch from the primary path to the backup path, wherein to configure the network devices, the one or more processors are configured to, based on the stored data, configure each of the network devices to forward packets to the slave network device corresponding to the primary network devices and not to forward the packets to the master network devices.

10. The controller device of claim 9, wherein to configure the network devices, the one or more processors are configured to program the network devices to avoid all of the network devices along the primary path.

11. The controller device of claim 9, wherein a first set of network devices of the SDN form the primary path, wherein a second set of the network devices of the SDN form the backup path, and wherein the second set of network devices includes all but one of the network devices of the first set of network devices.

12. The controller device of claim 11, wherein to determine the backup path, the one or more processors are configured to determine a plurality of backup paths to the primary path, wherein each of the plurality of backup paths includes a different subset of the first set of network devices and at least one respective network device of the SDN that is not in the first set of network devices.

13. The controller device of claim 9, wherein to configure the network devices, the one or more processors are configured to program a service device to determine when the failover event has occurred and to cause the service device to configure the network devices to switch from the primary path to the backup path in response to the failover event.

14. The controller device of claim 13, wherein the service device comprises one of a physical service device, a multi-tenant service device, or a virtual service device.

15. A non-transitory computer-readable storage medium having stored thereon instructions that, when executed, cause a processor of a controller device for a software defined network (SDN) to:

determine a primary path for network traffic between network devices of the SDN;

store data indicating that one or more network devices along the primary path comprise master network devices;

determine a backup path to the primary path for the network traffic between the network devices of the SDN;

store data indicating that one or more network devices along the backup path comprise slave network devices, wherein each of the master network devices of the primary path correspond to one or more of the slave network devices of the backup path; and

in response to a failover event, configure the network devices to switch from the primary path to the backup path, wherein the instructions that cause the processor to configure the network devices comprise instructions that cause the processor to, based on the stored data, configure each of the network devices to forward packets to the slave network device corresponding to the primary network devices and not to forward the packets to the master network devices.

16. The non-transitory computer-readable storage medium of claim 15, wherein the instructions that cause the processor to configure the network devices comprise instructions that cause the processor to program the network devices to avoid all of the network devices along the primary path.

17. The non-transitory computer-readable storage medium of claim 15, wherein a first set of network devices of the SDN form the primary path, wherein a second set of the network devices of the SDN form the backup path, and wherein the second set of network devices includes all but one of the network devices of the first set of network devices.

18. The non-transitory computer-readable storage medium of claim 17, wherein determining the backup path comprises determining a plurality of backup paths to the primary path, wherein each of the plurality of backup paths includes a different subset of the first set of network devices and at least one respective network device of the SDN that is not in the first set of network devices.

19. The non-transitory computer-readable storage medium of claim 15, wherein the instructions that cause the processor to configure the network devices comprise instructions that cause the processor to program a service device to determine when the failover event has occurred and to cause the service device to configure the network devices to switch from the primary path to the backup path in response to the failover event.

20. The non-transitory computer-readable storage medium of claim 19, wherein the service device comprises one of a physical service device, a multi-tenant service device, or a virtual service device.

* * * * *