Adaptive Spatial Modulation for MIMO-OFDM

Chan-Byoung Chae, Marcos Katz, Changho Suh, and Hongsil Jeong
Telecommunication R&D Center, Samsung Electronics, Suwon, Korea
E-mail: oparrow@samsung.com
Tel: +82-31-279-4828, Fax: +82-31-279-5130

Abstract— **In this paper we propose and analyze an adaptive spatial modulation scheme for MIMO-OFDM systems which adaptively and optimally selects one of the following transmission modes: diversity, spatial multiplexing and a hybrid combination of these two modes. Two criteria are used for mode selection, namely, the minimum Euclidean distance and a simple threshold based stochastic method exploiting channel quality estimations. We consider practically implementable antenna configuration with four transmit antennas and two or four receive antennas. Simulation results show that considerable BER performance gains can be obtained by the adaptive spatial modulation system, as compared with systems based on fixed modulation schemes.**

I. Introduction

Orthogonal frequency division multiplexing (OFDM) techniques have been applied to wireless communications, such as wireless local area networks (LAN), due to their robustness to multipath fading and high bandwidth efficiency. Multiple transmit and receive antennas can be combined with OFDM to improve the capacity and reliability of communications. Multiple-Input-Multiple Output (MIMO) communication systems are regarded as an effective solution for future high-performance wireless networks.

Depending on the geometry of the employed antenna array, two basic approaches can be considered: a beamforming approach for closely separated antenna elements (interelement separation at most $\lambda/2$ where λ is the carrier wavelength) or a diversity approach for widely separated antenna elements (typical interelement spacing of at least a few λ). In this paper, we will explore the latter approach where the fading processes associated with any two possible transmit-receive antenna pair can be assumed as independent. The fact that a MIMO system consists of a number of uncorrelated concurrent channels has been exploited from two different perspectives. First, from a pure diversity standpoint, one can enhance the fading statistics of the received signal by virtue of the multiple available replicas being affected by independent channels. By sending the same signal through parallel and independent channels, the effects of multipath fading can be greatly reduced, increasing the outage probability and hence the reliability of the communication link [1], [2]. In the second approach, referred to as spatial multiplexing [3], different information streams are transmitted on the parallel spatial channels associated with the transmit antennas. This could be seen as a very effective method to increase spectral efficiency. In general, in order to be able to separate the individual streams, the receiver has to be equipped with at least as many receive antennas as the number of parallel channels generated by the transmiter. For a given multiple antenna configuration, one may be interested in finding out which approach would provide the best performance. Recently some authors have considered the diversity-spatial multiplexing problem. In [4], the fundamental trade-off between diversity and spatial multiplexing was explored. A scheme based on switching between diversity and spatial multiplexing is proposed in [5]. Authors considered a fixed rate system in which the receiver adaptively selects one of the two transmission approaches based on the largest minimum Euclidean distance of the received constellation. The receiver informs its selection to the transmitting via a one-bit feedback channel. To ensure a fixed bit rate, the diversity scheme uses modulation with higher order than that used by its counterpart spatial modulation case. A hybrid method combining both diversity and spatial multiplexing is presented in [6]. The proposed approach optimally assigns antennas to a given (fixed) transmission scheme combining diversity and spatial multiplexing. Antenna selection is based either on full channel feedback or long term statistics. Authors in [7] studied the relationship between multiplexing gain and diversity gain in the context of antenna subset selection, thereby extending the recent result by Zheng and Tse [4].

In this paper, we consider switching mechanisms for selecting not only diversity (e.g., space-time block codes) or spatial multiplexing (e.g., V-BLAST) modes as in [5] but also considering a mixed-mode combining the advantages of both methods. The mixed mode approach can be seen as a good engineering compromise, where multipath fading is effectively combated by diversity while attaining a high spectral efficiency due to spatial multiplexing. We investigate two different criteria for the selection of the transmission mode, based on the largest minimum Euclidean distance of the received signal constellation on one hand, or based on a statistical threshold comparison, on the other hand. The switching condition for the mixed-mode case based on the first criterion is derived theoretically. In the second criterion, constant threshold values are used for defining the switching areas for transmission modes. In the second criterion, we explore the possibility of using the estimated received signal-to-noise ratio (SNR) for mode selection, where constant threshold values are used for defining the switching areas for transmission modes. Performance of the proposed schemes for practically implementable antenna configurations and receiver structures are presented and discussed. In general, it is found that switching between modes will improve the overall performance, as compared to fixed mode approaches.

 0-7803-8344-3/04/$20.00 © 2004 IEEE
Authorized licensed use limited to: University of Southern California. Downloaded on January 25,2024 at 22:28:18 UTC from IEEE Xplore. Restrictions apply.

Petitioner Samsung Ex-1035, 0001

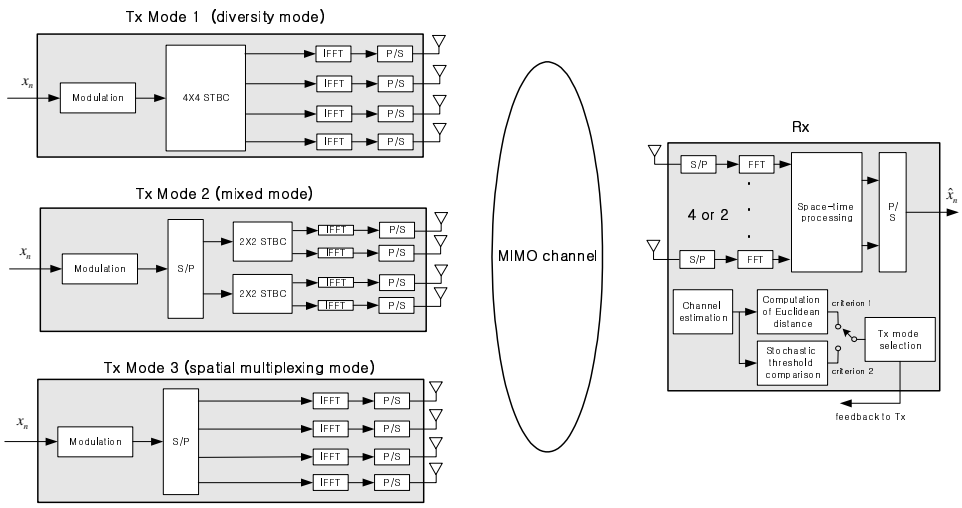

Fig. 1. Block diagram of the studied system based on adaptive selection of transmission mode.

II. System Model

A MIMO-OFDM system with N_T transmit and N_R receive antennas is considered in this paper. At each transmit antenna, the data is modulated by inverse fast Fourier transform (IFFT) and a cyclic prefix (CP) of length ν is added. To avoid intersymbol interference (ISI), $\nu \geq L-1$, where L is the maximum length of each channel. We assume a Rayleigh flat-fading channel that remains unchanged during at least one OFDM symbol. In this paper all available OFDM subcarriers are used for data transmission and for the sake of simplicity, no elaborated subcarrier selection methods are considered. In addition, to simplify analysis, channel coding is not included. Three transmission modes, controlled by the receiver via a feedback link, are utilized, namely Mode 1 exploiting only diversity, Mode 2 combining diversity and spatial multiplexing and Mode 3 taking advantage of spatial multiplexing only. Fig. 1 shows a simplified block diagram of the studied system. In this paper two practical multi-antenna configurations are studied, a $N_T = 4$, $N_R = 2$ (4x2) case and a $N_T = 4$, $N_R = 4$ (4x4) case.

A. Mode 1: Diversity

Space-time block codes (STBC) efficiently exploit transmit diversity to combat multipath fading while keeping decoding complexity to a minimum. Tarokh showed that there is no STBC with full-rate and full-diversity for more than two transmit antennas, and proposing the 3/4 rate, full-diversity code for four transmit antennas [9]. Jafarkhani proposed a full-rate quasi-orthogonal (QO) STBC form for 4 transmit antennas based on Alamouti orthogonal STBC [10]. In this case the transmission matrix is given by

$$C_J = \begin{bmatrix} A_{12} & A_{34} \\ -A_{34}^* & A_{12}^* \end{bmatrix} = \begin{bmatrix} x_1 & x_2 & x_3 & x_4 \\ -x_2^* & x_1^* & -x_4^* & x_3^* \\ -x_3^* & -x_4^* & x_1^* & x_2^* \\ x_4 & -x_3 & -x_2 & x_1 \end{bmatrix} \quad (1)$$

where A_{12}, A_{34} are Alamouti codes. It is noted here that since channel matrix of the QO-STBC is not full-rank, full-diversity gain cannot be attained. Due to the fact that channel coding is not applied and a fix transmit data rate is assumed, QO-STBC is employed in this study, although its performance is not optimum. Tarokh's 3/4 rate, full-diversity STBC could be used if channel coding is considered.

B. Mode 2: Mixed (Hybrid Diversity and Spatial Multiplexing)

As illustrated in Fig. 1, this mode combines diversity and spatial multiplexing by transmitting from four transmit antennas, each space-time block coded with the basic Alamouti scheme of order two. The transmission matrix for space-time block coding the ith data stream, $i = a, b$, is given by

$$A_i = \begin{bmatrix} x_1(i) & x_2(i) \\ -x_2(i)^* & x_1(i)^* \end{bmatrix} \quad (2)$$

To decode the data, Minimum Mean Square Error (MMSE) and Zero Forcing (ZF) receivers can be employed. For the MMSE receiver, we assume that the transmitted matrix is $[a_{2n}(k), a_{2n+1}(k), b_{2n}(k), b_{2n+1}(k)]^T$, where a and b indicate different signal streams. First, the tap weight vector and decoding layer order are determined. If the first decoding layer is a, the procedure can be represented by

$$\begin{bmatrix} \hat{a}_{2n}(k) \\ \hat{a}_{2n+1}(k) \end{bmatrix} = \text{decision}\left\{ \begin{bmatrix} \mathbf{w}_1^H(k) \\ \mathbf{w}_2^H(k) \end{bmatrix} \mathbf{y}_n(k) \right\}. \quad (3)$$

Authorized licensed use limited to: University of Southern California. Downloaded on January 25,2024 at 22:28:18 UTC from IEEE Xplore. Restrictions apply.

Petitioner Samsung Ex-1035, 0002

The interference from the original signal can be deleted using $\hat{a}_{2n}(k)$ and $\hat{a}_{2n+1}(k)$, accordingly, the other stream can be decoded as follows:

$$\mathbf{y}'_n(k) = \mathbf{y}_n(k) - \begin{bmatrix} \mathbf{h}_1(k) & \mathbf{h}_2(k) \end{bmatrix} \begin{bmatrix} \hat{a}_{2n}(k) \\ \hat{a}_{2n+1}(k) \end{bmatrix} \quad (4)$$

$$\begin{bmatrix} \hat{b}_{2n}(k) \\ \hat{b}_{2n+1}(k) \end{bmatrix} = \text{decision}\left\{ \begin{bmatrix} \mathbf{h}_3(k) \\ \mathbf{h}_4(k) \end{bmatrix} \mathbf{y}'_n(k) \right\} \quad (5)$$

Note that for comparative purposes we can also employ ML decoding (explained in next subsection) to obtain the optimum performance, used as our baseline reference.

C. Mode 3: Spatial Multiplexing

In this section, we briefly review the employed spatial multiplexing scheme. The V-BLAST architecture has been recently proposed for achieving high spectral efficiency over wireless channels characterized by rich scattering [3]. In this approach, one way of detection is to use conventional adaptive antenna array (AAA) techniques, i.e., linear combining nulling. Conceptually, each stream (i.e., layer) in turn is considered to be the desired signal, while regarding the remaining signals as interference. Nulling is performed by linearly weighting the received signals so as to satisfy some performance related criterion, such as Zero-Forcing or MMSE. This linear nulling approach is viable, but superior performance is obtained if nonlinear techniques are used. One particularly attractive nonlinear alternative is to exploit symbol cancellation as well as linear nulling to perform detection. Using symbol cancellation, interference from already-detected components is subtracted from the received signal vector; it would reduce the interference. In this study, we apply ordered successive interference cancelation with Zero-Forcing and MMSE. Also, as a reference, we will consider a maximum likelihood (ML) decoding receiver.

It is assumed that the $H_{ij}(k)$ is the channel coefficient from j_{th} transmit antenna to i_{th} receive antenna and $\mathbf{w}$ is white Gaussian noise with covariance matrix $\mathbf{C}_w = E[\mathbf{w}\mathbf{w}^H] = \sigma^2\mathbf{I}_R$. Then, the received signal vector can be written as follows:

$$\mathbf{y}_n(k) = \mathbf{H}(k)\mathbf{x}_n(k) + \mathbf{w}(k) \quad (6)$$

where the index k denotes the k-th subcarrier, $\mathbf{y}(k) = [y_1(k) \dots y_{N_R}(k)]^T$, $\mathbf{x}(k) = [x_1(k) \dots x_{N_T}(k)]^T$, and $\mathbf{w}(k)$ is a $(N_R \times 1)$ noise vector.

1) Maximum Likelihood Decoding (Optimal Solution): The ML detection of $\mathbf{x}(k)$ can be found by maximizing the conditional probability density function and this is equivalent to minimizing the log-likelihood function:

$$\hat{\mathbf{x}}(k) = \min_{\mathbf{x}(k)} \{\mathbf{y}(k) - \mathbf{H}\mathbf{x}(k)\}^H \{\mathbf{y}(k) - \mathbf{H}\mathbf{x}(k)\}$$
$$\text{where } \mathbf{x}(k) \in \text{all possible constellation sets}$$

As known, ML decoding has a high complexity and thus, sub-optimal but practically implementable solutions are considered next.

2) V-BLAST (Sub-optimal Solution): Instead of ML decoding approach, we use linear detection techniques, i.e., Zero-Forcing and MMSE. To improve the linear detection techniques, we try to decode according to received signal strength, and extract the decoded signal from the received signal. This approach is referred to as D-BLAST or V-BLAST [3] according to transmitted signal scheme. For simplicity, we consider the V-BLAST.

We can summary the receiving operation of V-BLAST as follows:

- Step 1: Compute the tap weight matrix $\mathbf{W}$
- Step 2: Find the layer with maximum SNR
- Step 3: Detection
  $z_k(n) = \mathbf{W}_k^H \mathbf{y}(n)$
  $\hat{x}_k(n) = \text{decision}[z_k(n)]$
- Step 4: Interference cancellation
  $\mathbf{y}(n) = \mathbf{y}(n) - \mathbf{h}_k \hat{x}_k(n)$
  $\mathbf{H} = [\mathbf{h}_1, \dots, \mathbf{h}_{k-1}, 0, \mathbf{h}_{k+1}, \dots, \mathbf{h}_T]$
- Step 5: Repeat Step 1 until all symbols are detected.

[Zero-Forcing]: We can express the cost function as follow:

$$J_{ZF} = \{\mathbf{y}(k) - \mathbf{H}\hat{\mathbf{x}}(k)\}^H \{\mathbf{y}(k) - \mathbf{H}\hat{\mathbf{x}}(k)\} \quad (7)$$

Since J_{ZF} is a convex function over $\hat{x}(k)$, we can find $\hat{x}$ using the minimum limit. Then, the tap weighted vector is given by

$$\mathbf{W} = \{\mathbf{H}^H\mathbf{H}\}^{-1}\mathbf{H}^H \quad (8)$$

[MMSE]: To consider the noise variance, we can express the cost function as follows:

$$J_{MMSE} = E[\{\mathbf{y}(k) - \mathbf{H}\hat{\mathbf{x}}(k)\}^H \{\mathbf{y}(k) - \mathbf{H}\hat{\mathbf{x}}(k)\}]. \quad (9)$$

Using a similar method as with the Zero-Forcing detection method, the weight vector results in

$$\mathbf{W} = \{\mathbf{H}^H\mathbf{H} + \sigma^2\mathbf{I}\}^{-1}\mathbf{H}^H. \quad (10)$$

Note that the noise variance has to be estimated in order to use MMSE approach.

III. Criteria for Tx Mode Selection

In order to select the appropriate transmission scheme at a given time, two selection criteria are investigated: the Euclidean distance and stochastic threshold. In [5], the selection is carried out between diversity and spatial multiplexing schemes (corresponding to Modes 1 and 3, respectively) based on the instantaneous channel matrix. It should be noted that different modulation order is utilized for spatial multiplexing and diversity to ensure the same (fixed) data rate. The transmitting mode selection criterion targets the minimization of bit error rate (BER). The further apart the symbols in the receive constellations are spread, the less likely wrong decisions will be made by the detector, and vice versa. Authors in [5] proposed to use the Euclidean distance and applied the ideas in a simple system with two transmit and two receive antennas.

In this paper, we extend the approach into a larger number of antennas. This allows us to consider mixed modes where

Authorized licensed use limited to: University of Southern California. Downloaded on January 25,2024 at 22:28:18 UTC from IEEE Xplore. Restrictions apply.

Petitioner Samsung Ex-1035, 0003

diversity and spatial multiplexing are combined. The larger the number of antennas, the larger the number of possible mixed mode configurations. In the present study, including (4×2) and (4×4) systems, only one mixed mode (e.g., Mode 2) appears to be feasible. In addition to the Euclidean distance approach, a simple statistical decision criterion is proposed for mode selection.

A. Euclidean Distance

Based on the algorithm presented in [5], we choose the approach which offers the largest *minimum squared Euclidean distance* of the received signal constellation, denoted $d^2_{min,Mode1}(\mathbf{H})$ for diversity, $d^2_{min,Mode2}(\mathbf{H})$ for mixed configuration, and $d^2_{min,Mode3}(\mathbf{H})$ for spatial multiplexing. Let $d^2_{min,mode1}, d^2_{min,mode2}$, and $d^2_{min,mode3}$ be the corresponding minimum distance of the normalized unit energy constellation. The 2^R-QAM Euclidean distance equation $d^2 = 12/(2^R - 1)$ will be used, corresponding to QAM modulation for diversity, mixed and spatial multiplexing modes. Using this Euclidean distance equation, we can estimate error probability as.

$$P_e \leq N_e Q\left(\sqrt{\frac{E_s}{N_0} d^2_{min,Mode_{1,2,3}}}\right) \tag{11}$$

where N_e is the number of nearest neighbors in the constellation and can be found for each proposed mapping scheme based on the channel coefficients matrix H, $Q(x) = \frac{1}{2} erfc(x/\sqrt{2})$, where $erfc$ is the complementary error function.

[Mode 1: Diversity] For linear diversity, the minimum distance of the diversity constellation at the receiver can be shown to be

$$d^2_{min,Mode1}(\mathbf{H}) \leq \frac{\| \mathbf{H} \|^2_F}{N_T} d^2_{min,mode1} \tag{12}$$

where, $\| \mathbf{H} \|_F$ is the Frobenius norm of matrix $\mathbf{H}$ and N_T is the number of transmit antennas. The details for derivation of $d^2_{min,Mode1}(\mathbf{H})$ follow the derivation procedure of the maximum SNR criterion for code design[5], [11].

[Mode 2: Mixed Configuration] For this hybrid configuration we extend and derive the selection algorithm, resulting in the conditions shown below.
For the 4x4 system the minimum Euclidean distance condition was found to be as follows:

$$\begin{aligned}(\lambda^2_3(\mathbf{H}) + \lambda^2_4(\mathbf{H}))\frac{d^2_{min,mode2}}{N_T} &\leq d^2_{min,Mode2}(\mathbf{H}) \\ &\leq (\lambda^2_1(\mathbf{H}) + \lambda^2_2(\mathbf{H}))\frac{d^2_{min,mode2}}{N_T}\end{aligned} \tag{13}$$

while for the 4x2 system the condition results in

$$\begin{aligned}\lambda^2_2(\mathbf{H})\frac{d^2_{min,mode2}}{N_T} &\leq d^2_{min,Mode2}(\mathbf{H}) \\ &\leq \lambda^2_1(\mathbf{H})\frac{d^2_{min,mode2}}{N_T}\end{aligned} \tag{14}$$

The rank of the channel matrix for the above cases is 4 and 2, respectively.

[Mode 3: Spatial Multiplexing] Suppose that $\mathbf{x}_{i,j} \in X_{Mode3}$ such that $\mathbf{x}_i \neq \mathbf{x}_j$ belong to the transmit vector constellation. Let the squared minimum distance of the output constellation be defined as

$$d^2_{min,Mode3} := \min_{\mathbf{x}_i,\mathbf{x}_j \in X_{Mode3}, \mathbf{x}_i \neq \mathbf{x}_j} \frac{\|\mathbf{H}(\mathbf{x}_i - \mathbf{x}_j)\|^2}{N_T} \tag{15}$$

where, S_{Mode3} is the set of all possible transmitted vectors $\mathbf{x}$. From the Rayleigh-Ritz Theorem [8] we have that $\|\mathbf{H}(\mathbf{x}_i - \mathbf{x}_j)\|^2 \geq \lambda^2_{min}\|(\mathbf{x}_i - \mathbf{x}_j)\|^2$, we can express the bound equation.

$$\begin{aligned}\lambda^2_{min}(\mathbf{H})\frac{d^2_{min,mode3}}{N_T} &\leq d^2_{min,Mode3}(\mathbf{H}) \\ &\leq \lambda^2_{max}(\mathbf{H})\frac{d^2_{min,mode3}}{N_T}\end{aligned} \tag{16}$$

where, $\lambda_{min,man}$ is the minimum/maximun singular value of the channel matrix $\mathbf{H}$ and N_T is the number of transmit antennas. The bound of interest in (16) is the lower bound. This is because the error vector will be distributed symmetrically in the space of all vectors. As the rate increases, the density of the error vectors increases and it becomes more likely that there will be an error vector close to the minimum singular vector of the channel [5].

For given channel matrix $\mathbf{H}$, a large minimum Euclidean distance is preferable.

$$\max(d^2_{min,Mode1}(\mathbf{H}), d^2_{min,Mode2}(\mathbf{H}), d^2_{min,Mode3}(\mathbf{H})) \tag{17}$$

From the above minimum Euclidean distance conditions for each mode, diversity gain is obtained through the summation of the powers of each path. This sum implies that a large minimum distance is possible even if there is only a single non-negligible path between one of the N_T transmit antennas and N_R receive antennas. On the other hand, spatial multiplexing depends significantly on the minimum singular value of the channel. Finally, the mixed scheme relies on the above two properties. Note that since a fixed rate is assumed the three schemes use constellations different associated minimum distances.

It is pointed out that the minimum Euclidean distance criterion is not optimal since it is based on bounds and not on exact values, especially for large number of transmit antennas. Furthermore, if we use this criterion to determine the transmission configuration, system complexity could be an issue because the most appropriate transmission scheme is selected quite frequently. Indeed, even though only two bits in the feedback link are needed (in order to select one-out-of-three modes), the selection information is sent to the transmitter on every frame. In some applications provisions for such a feedback link may not be sufficient and hence we also propose another selection criterion requiring a slower feedback rate. We emphasize that as with any closed-loop approach, the delay in the feedback link in general limit the applicability of this scheme to low- and moderate-mobility environments.

Authorized licensed use limited to: University of Southern California. Downloaded on January 25,2024 at 22:28:18 UTC from IEEE Xplore. Restrictions apply.

Petitioner Samsung Ex-1035, 0004

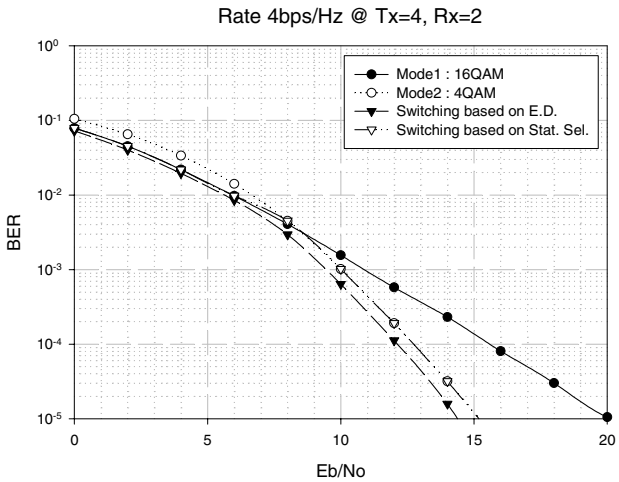

Fig. 2. Performance comparison of fixed and adaptive modulation schemes. Rate 4 bps/Hz, Tx = 4, Rx = 2.

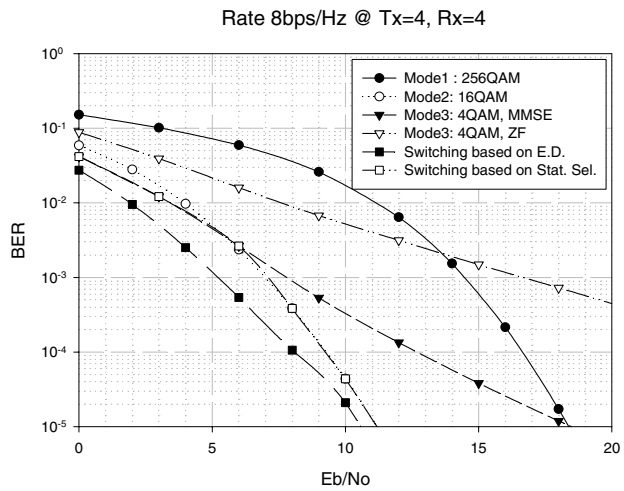

Fig. 3. Performance comparison of fixed and adaptive modulation schemes. Rate 8 bps/Hz, Tx = 4, Rx = 4.

B. Selection based on estimated SNR

In this section we propose a mode selection scheme based on the statistics of the radio channel. The idea of this method is to find SNR thresholds defining mode switching zones. Similarly to the Euclidean distance approach, the statistical selection method is based on periodical uplink reports of downlink quality, but in this case, the feedback rate is significantly lower. The optimization of the thresholds used for mode selection is a challenge due to their dependency with Doppler frequency, multi-path environment etc. In this paper, we propose the use of a modified version of the New Reno Algorithm (NRA) to overcome the computational complexity and required bandwidth of the selection rule based on the minimum Euclidean distance. The NRA, originally proposed for Transmission Control Protocol (TCP) congestion control at the network layer [12], can be modified and applied to perform the mode selection. If we have no SNR rate constraints the algorithm increases the transmission scheme switching level (i.e., threshold) by ΔUp when a NACK is received and decreases it by $\Delta Down$ when an ACK is received. The condition for selecting suitable values of ΔUp and $\Delta Down$ is given by

$$\Delta Down = \Delta Up \frac{P_{NACK}}{1 - P_{NACK}} \tag{18}$$

The transmission scheme switching levels are adopted to maintain a target Transmission Timing Interval (TTI) block error rate (P_{NACK}). Comparing the estimated SNR with the thresholds the most appropriate transmission mode is selected. In this paper, since constant spectrum efficiency is assumed (i.e., fixed rate), however, fixed constant thresholds will be used for defining mode selection.

As discussed before the transmission modes employ different modulation orders to keep the data throughput constant. In this study, modes are defined as follows:

1) 4×2 system:
   - Mode 1: 16QAM (one-layer, 4×4 quasi-orthogonal STBC)
   - Mode 2: 4QAM (two-layers, 2×2 STBC).
2) 4×4 system:
   - Mode 1: 256QAM (one-layer, 4×4 quasi-orthogonal STBC),
   - Mode 2: 16QAM (two-layers, 2×2 STBC)
   - Mode 3: QPSK (4QAM) modulation (four-layers).

It should be noticed that when using the threshold algorithm we will only switch between two modes. In the (4×2) case switching takes place between Mode 1 and 2 (Mode 3 cannot be applied since the number of receiver antenna is smaller than the number of transmitter antenna) whereas in the (4×4) case Modes 2 and 3 are only employed (Mode 1 is not considered since its contribution tends to degrade the overall performance, as one would expect from a high-order modulation, i.e., 256QAM in this case). Consequently, when using the statistical selection method only one threshold is required, Th_0 and Th_1 for the (4×2) and (4×4) configurations, respectively. Threshold values are set as Th_0 =8.5 dB and $Th_1 = 5.2$ dB.

IV. Numerical Results

The performance of the proposed schemes is evaluated and compared in this section. Parameters are set here according to the IEEE 802.11 standard. The number of OFDM subcarriers is 64, CP length is 16, and frame length is ($N = 20\ symbols$). Performance of the adaptive spatial modulation scheme based on minimum Euclidean distance and stochastic switching are compared for $N_T = 4$, $N_R = 2$ ($R = 4bps/Hz$) and $N_T = 4$, $N_R = 4$ ($R = 8bps/Hz$) cases. We assume an i.i.d. uncorrelated Rayleigh matrix channel model implying that $[\mathbf{H}]_{ij} = h_{ij}$ are complex $\mathcal{CN}$(0,1). We also assume that the channel is constant over a frame length. In addition, perfect channel knowledge and zero-delay feedback is assumed.

Authorized licensed use limited to: University of Southern California. Downloaded on January 25,2024 at 22:28:18 UTC from IEEE Xplore. Restrictions apply.

Petitioner Samsung Ex-1035, 0005

TABLE I
SIMULATION PARAMETERS

Parameters	Value
N_{FFT}	64
CP Length	16
Frame Length	20 Symbols
Modulation	4/16/256 QAM
Receiver	ML/ZF/MMSE
Channel	Rayleigh Flat Fading
Channel Coding	None
Channel Estimation	Ideal
Number of Antennas	Tx = 4, Rx = 2 or 4

A. 4×2 System

Fig. 2 shows the performance results of a 4×2 MIMO-OFDM system with 4 bps/Hz spectrum efficiency. BER plots were obtained for 5000 frames. As pointed out, in this case no pure spatial multiplexing (Mode 3) is used because the particular imbalance in the number of receive and transmit antennas. At high SNRs about 0.6 dB of switching gain over the best of Mode 1 and Mode 2 is obtained by using the minimum Euclidean distance based method. In the statistical selection approach the system switches to Mode 1 for SNR $< Th_0$ and to Mode 2 for otherwise, with Th_0 = 8.5 dB. Note that this corresponds to approximately the SNR threshold value at which performance curves for Mode 1 and Mode 2 intersect. At low SNR, the Euclidean distance based approach outperforms the threshold approach by a small fraction of dB, while in the high SNR area, the difference is about 0.6 dB.

B. 4×4 System

Fig. 3 shows the performance plots of a 4×4 MIMO-OFDM system with 8 bps/Hz spectrum efficiency. As a first observation, we can see that the best BER performance is obtained when the system uses Mode 3 with ML detection. This performance plot coincides with the corresponding to the minimum Euclidean distance criterion. In fact, according to the minimum Euclidean distance selection criterion, the probability of selection of Mode 3 is 1 ($Pr_{Mode3} = 1$). This suggests that for this antenna configuration no switching is required since the spatial modulation scheme provides always the best results. However, it is usually accepted that for current technologies ML decoding with high spectral efficiency (e.g., $> 8\ bps/Hz$) leads to solutions with prohibitive implementation complexity. The reduced-complexity stochastic selection approach provides considerable gains compared to fixed modulation schemes but it is not as effective as the optimum case. Nevertheless, as a whole, the statistical mode selection scheme can be seen as a good engineering compromise between performance and complexity. In practical systems one would consider a MMSE detector in combination with Ordered Successive Interference Cancellation (OSIC) to decode the layered streams with relatively low complexity.

V. CONCLUSION

In this paper we have studied a spatial modulation scheme for MIMO-OFDM system based on adaptive selection among diversity, spatial multiplexing and mixed hybrid modes. Two transmission mode selection criteria were employed, one based on the minimum Euclidean distance of the received signal constellation and other based on simple statistical thresholds. We considered practically implementable 4×2 and 4×4 MIMO systems. In the 4×2 system, gains of 0.6 dB can be achieved using the minimum Euclidean distance. Transmission mode switching based on thresholds also gives significant gains, when compared to fixed modulation schemes. In the 4×4 system, the minimum Euclidean distance schemes also gives the best performance but, when it comes to implementation complexity, the statistical switching approach seems to be a more feasible alternative. Optimum criteria for real channels remains as a subject for future research. Also, more sophisticated sub-carrier allocations and their impact on the switching strategy are interesting subjects to be explored. In addition, optimal solutions for increasing the data throughput (e.g., variable rate) and improving the BER performance of MIMO-OFDM systems will be considered in future works.

REFERENCES

[1] Alamouti S, "Simple Transmit Diversity Technique for Wireless Communications," *IEEE JSAC*, Vol.16, No.8, pp.1451-1458, Oct. 1998

[2] Tarokh V., Seshadri N., and Calderbank A. "Space-time codes for high data rate wireless communications: Performance criterion and code construction," *IEEE tr. Information Theory*, Vol.44, pp.744-765, Mar. 1998

[3] Foschini. G, "Layered space-time architecture for wireless communication in a fading environment when using multi-element antennas," *Bell Labs. Tech. L*, pp. 41-59, 1996

[4] Zheng L and Tse. D "Diversity and multiplexing: a fundamental tradeoff in multiple-antenna channels," *IEEE tr. Information Theory*, Vol.49, 1073-1096, May, 2003

[5] R.W.Heath Jr. and A.Paulraj, "Switching between spatial multiplexing and transmit diversity based on constellation distance," *Proc. of Allerton Conf. on Comm. Cont. and Comp., Oct. 2000*

[6] Skjevling H., Gesbert D. and Christophersen N, "Combining space time block codes and multiplexing in correlated MIMO channels: An antenna assignment strategy," *Proc. of Nordic Signal Processing Conference (NORSIG)*, June. 2003

[7] A.Gorokhov, D.Gore and A.Paulraj, "Diversity versus multiplexing in MIMO system with antenna selection" *Allerton Conference*, Oct. 2003

[8] H.Lutkepohl, *"Handbook of Matrices,"* John Wiley & Sons, 1996

[9] V.Tarokh, H.Jafarkhani, and A.R. Calderbank "Space-Time Block Coding for Wireless Communications: Performance Results," *IEEE J. Selec. Areas Commun.*, Vol.17, pp.451-460, Mar. 1999

[10] H.Jafarkhani, "A quasiorthogonal space-time block code," *IEEE tr. Communications*, Vol.49, pp.1-4, 2001

[11] G.Ganesan and P.Stoica, "Space-time block codes: a maximum SNR approach," *IEEE tr. Inf. Theory*, Vol.47, pp.1650-1656, May 2001

[12] Floyd.S., *et al*, "A report on recent developments in TCP congestion control," *IEEE Communications Magazine*, Vol.39, Issue.4, pp.84-90, April, 2001

Authorized licensed use limited to: University of Southern California. Downloaded on January 25,2024 at 22:28:18 UTC from IEEE Xplore. Restrictions apply.

Petitioner Samsung Ex-1035, 0006