US007204944B2

(12) **United States Patent**
Piedboeuf

(10) **Patent No.: US 7,204,944 B2**
(45) **Date of Patent: Apr. 17, 2007**

(54) **PROCESS AND APPARATUS FOR CREATING COLOR EFFECTS IN EXTRUDABLE MATERIAL**

(75) Inventor: **Marie-Christine Piedboeuf**, Dollard-des-Ormeaux (CA)

(73) Assignee: **Pelican International Inc.**, Laval, Quebec (CA)

(*) Notice: Subject to any disclaimer, the term of this patent is extended or adjusted under 35 U.S.C. 154(b) by 314 days.

(21) Appl. No.: **10/667,398**

(22) Filed: **Sep. 23, 2003**

(65) **Prior Publication Data**

US 2005/0062185 A1 Mar. 24, 2005

(51) **Int. Cl.**
B29C 47/04 (2006.01)

(52) **U.S. Cl.** **264/75**; 264/73

(58) **Field of Classification Search** ..... None
See application file for complete search history.

(56) **References Cited**

U.S. PATENT DOCUMENTS

2,632,204	A *	3/1953	Murray	425/132
2,803,041	A	8/1957	Hill et al.	
2,985,556	A *	5/1961	Rowland	156/244.25
3,405,425	A *	10/1968	Buckley et al.	425/133.5
3,422,175	A	1/1969	Rowland	
3,715,420	A *	2/1973	Kiyono et al.	264/173.19
3,743,250	A *	7/1973	Fitzhugh et al.	366/337
3,792,945	A	2/1974	Randall	
3,920,366	A	11/1975	Randall	
4,011,292	A	3/1977	Randall	
4,072,791	A *	2/1978	Randall	428/221
4,093,188	A *	6/1978	Horner	366/336
4,164,385	A	8/1979	Finkensiep	
4,316,868	A	2/1982	Esposito et al.	
4,562,023	A	12/1985	Pabst et al.	
4,626,187	A	12/1986	Kamada	
4,680,155	A *	7/1987	Rochefort et al.	264/73
4,753,766	A	6/1988	Pinsolle	
5,232,751	A *	8/1993	Cameron et al.	428/15
5,998,006	A *	12/1999	Bambara et al.	428/304.4
6,692,683	B2 *	2/2004	Gockel et al.	264/515
6,863,967	B2	3/2005	Cramer	
6,932,591	B2	8/2005	Cramer	
2003/0003283	A1	1/2003	Cramer	

FOREIGN PATENT DOCUMENTS

WO	WO 02/074843	9/2002

* cited by examiner

Primary Examiner—Mark Eashoo

(57) **ABSTRACT**

A process for creating color effects in extrudable material, such as plastic. The process includes the steps of providing a first flow of viscous material of a first color and a second flow of viscous material of a second color, the second color being different from the first color. Next, the first and second flows are combined to form a stream of viscous material, where the stream is characterized by a first band of the first color and a second band of the second color, the second band being adjacent to the first band. The stream of viscous material is fed through a static mixer such that, upon exiting the static mixer, the stream is further characterized by a third band of a third color, the third color being different from the first and second colors, the third band being located between the first and second bands.

18 Claims, 7 Drawing Sheets

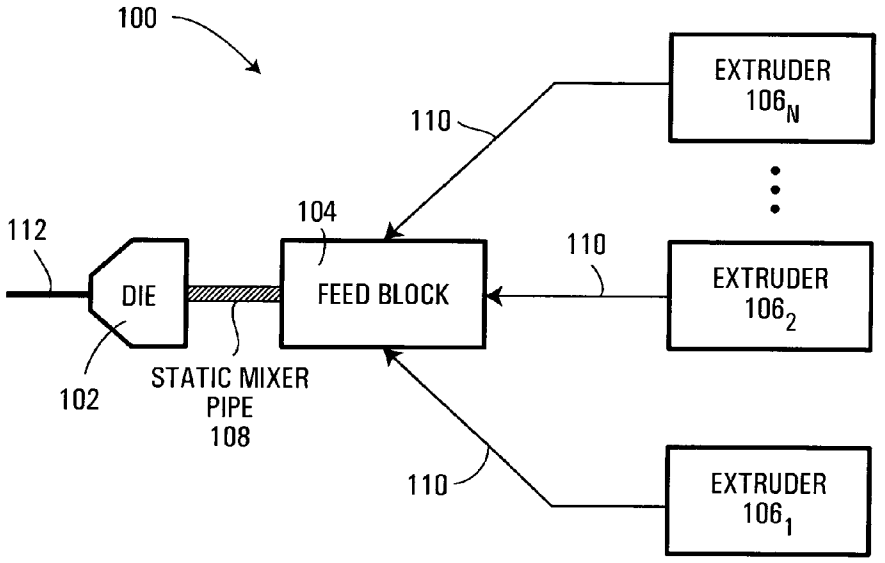

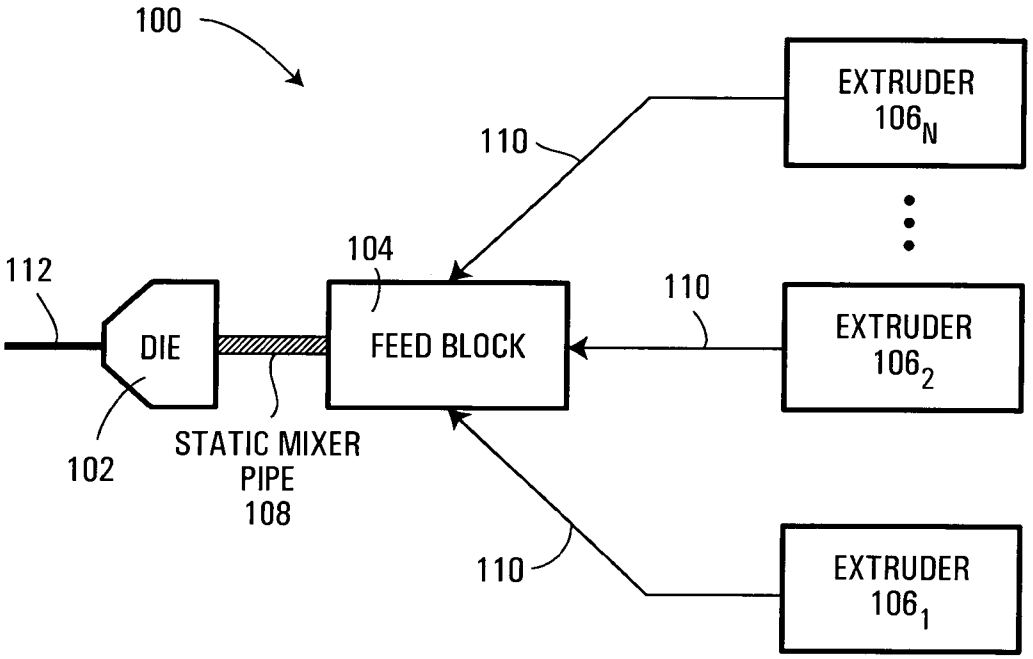
100
110
EXTRUDER
106N
104
112
110
DIE
FEED BLOCK
EXTRUDER
1062
102
STATIC MIXER
PIPE
108
110
EXTRUDER
1061

FIG. 1

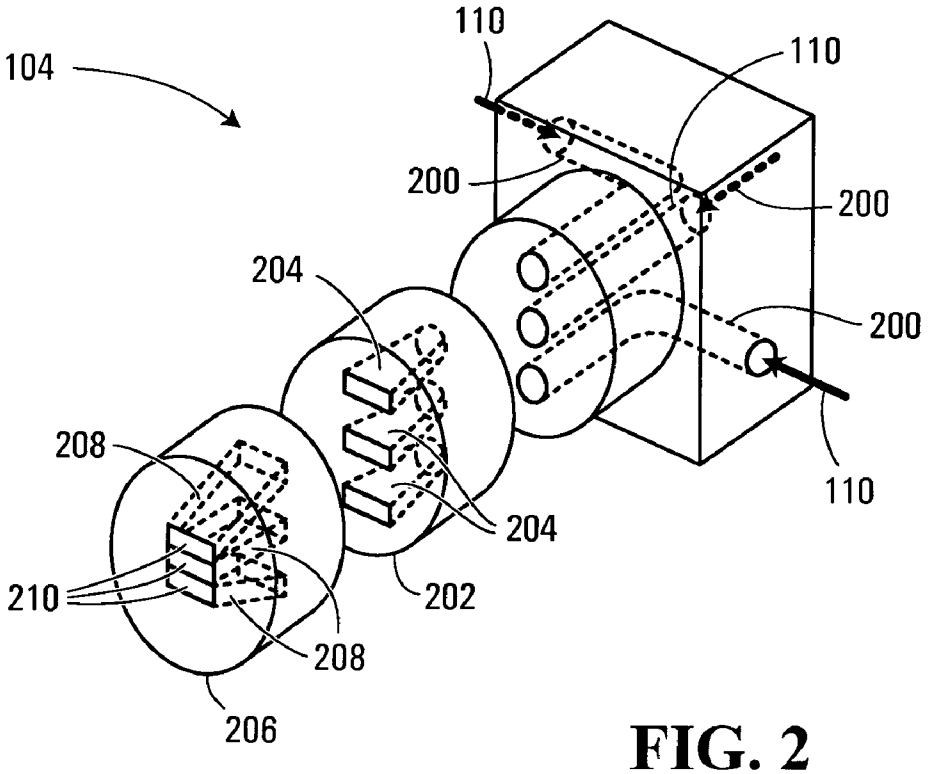

FIG. 2

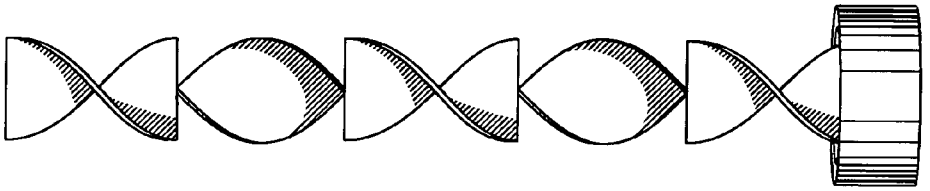

FIG. 3

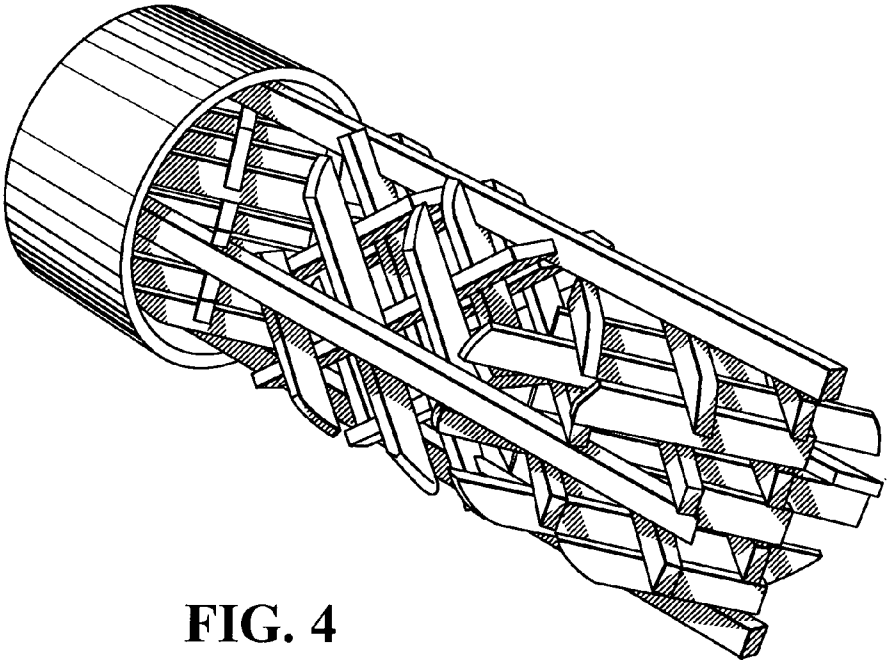

FIG. 4

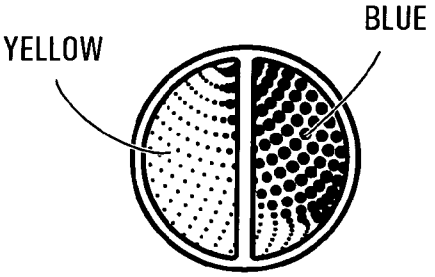
YELLOW
BLUE

FIG. 5A

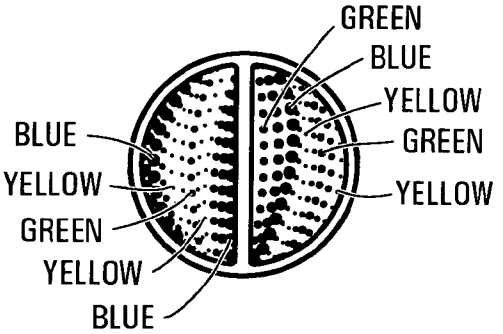
GREEN
BLUE
YELLOW
GREEN
YELLOW
BLUE
YELLOW
GREEN
YELLOW
BLUE

FIG. 5B

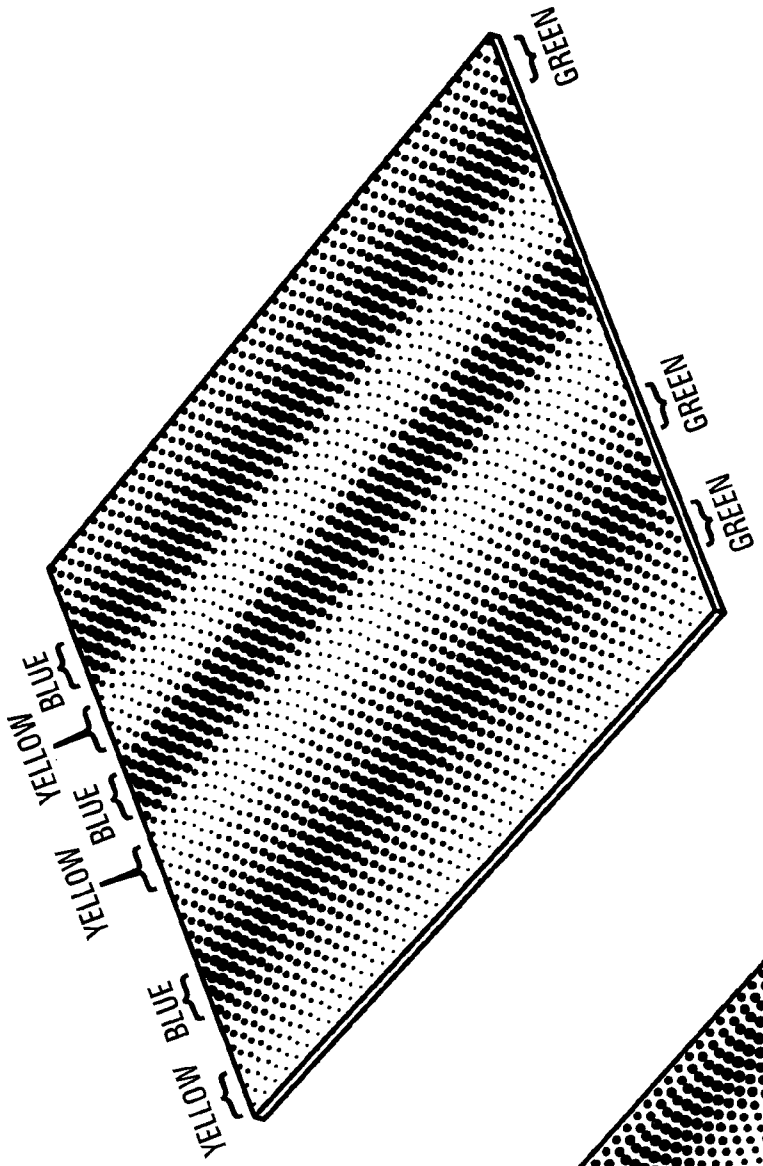

FIG. 6A

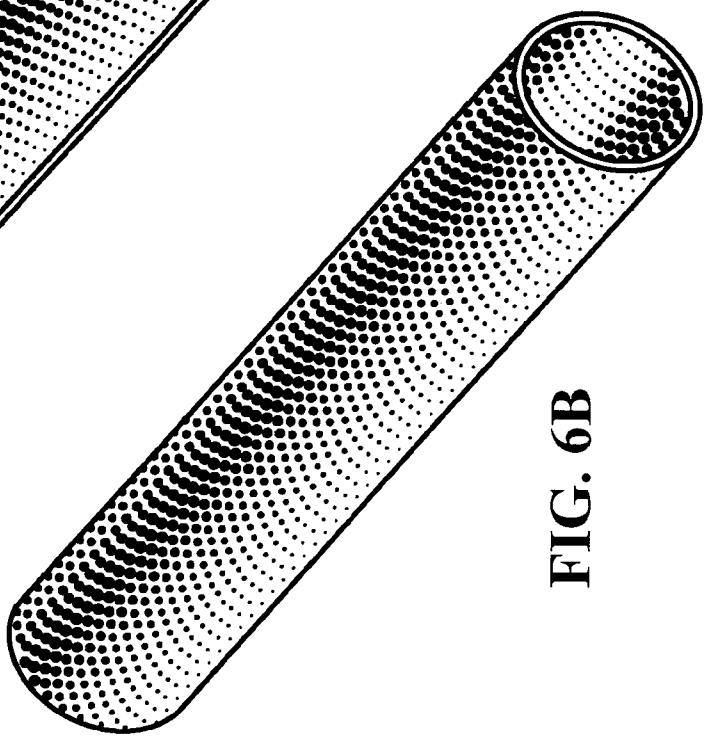

FIG. 6B

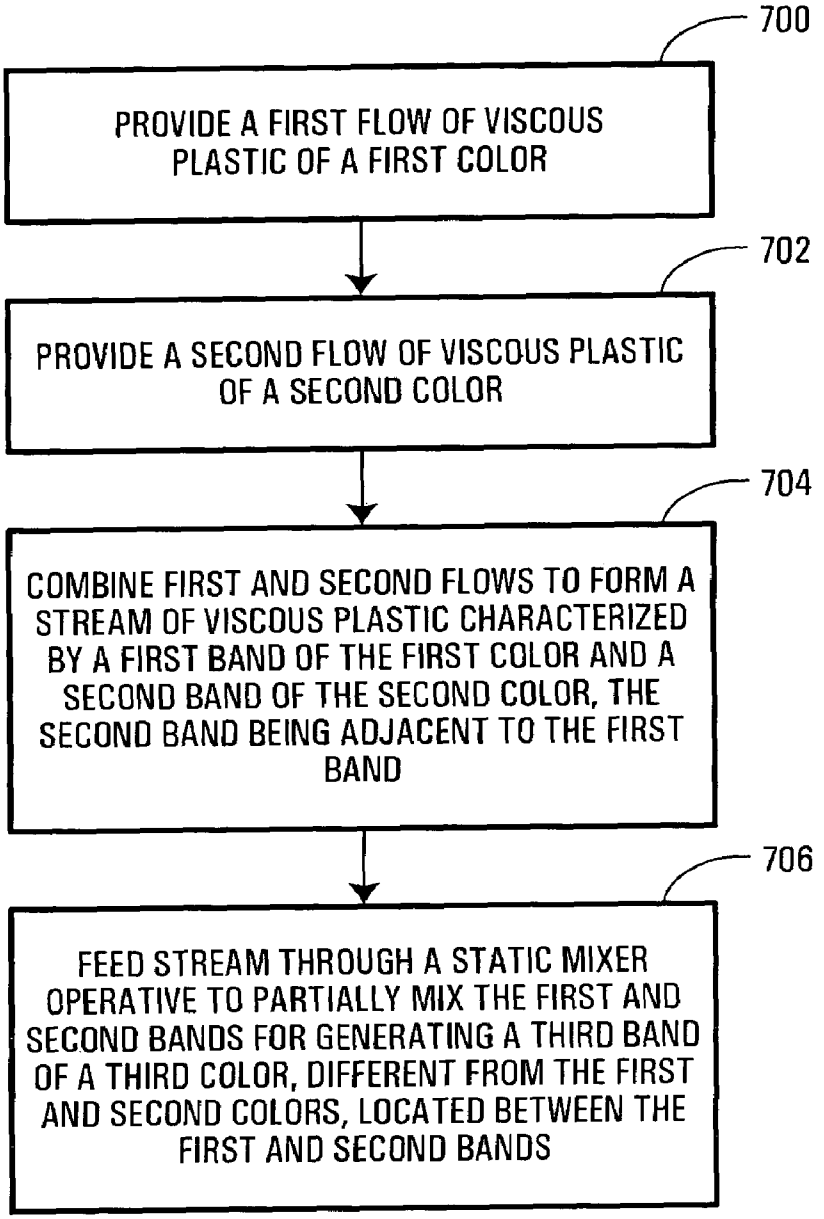
700
PROVIDE A FIRST FLOW OF VISCOUS PLASTIC OF A FIRST COLOR
702
PROVIDE A SECOND FLOW OF VISCOUS PLASTIC OF A SECOND COLOR
704
COMBINE FIRST AND SECOND FLOWS TO FORM A STREAM OF VISCOUS PLASTIC CHARACTERIZED BY A FIRST BAND OF THE FIRST COLOR AND A SECOND BAND OF THE SECOND COLOR, THE SECOND BAND BEING ADJACENT TO THE FIRST BAND
706
FEED STREAM THROUGH A STATIC MIXER OPERATIVE TO PARTIALLY MIX THE FIRST AND SECOND BANDS FOR GENERATING A THIRD BAND OF A THIRD COLOR, DIFFERENT FROM THE FIRST AND SECOND COLORS, LOCATED BETWEEN THE FIRST AND SECOND BANDS

FIG. 7

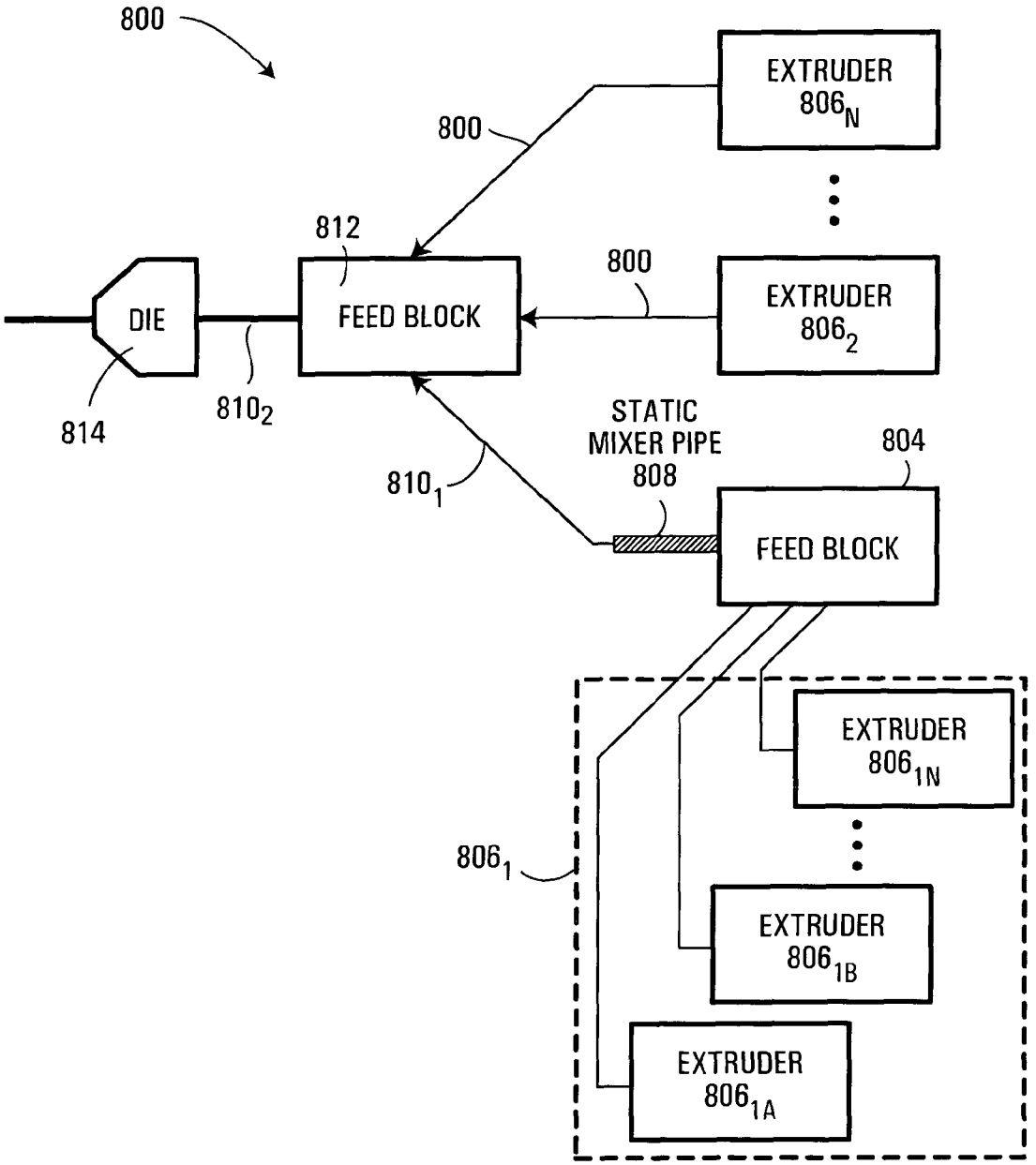
800
EXTRUDER
806N
800
812
800
DIE
FEED BLOCK
EXTRUDER
8062
814
8102
STATIC
MIXER PIPE
808
804
8101
FEED BLOCK
EXTRUDER
8061N
8061
EXTRUDER
8061B
EXTRUDER
8061A

FIG. 8

PROCESS AND APPARATUS FOR CREATING COLOR EFFECTS IN EXTRUDABLE MATERIAL

FIELD OF THE INVENTION

The present invention relates generally to the field of extrusion processes. More specifically, the present invention relates to a process for creating color effects in extrudable material.

BACKGROUND OF THE INVENTION

Extrusion processes are commonly used in a variety of different industries, and with a multitude of different types and grades of material, for forming and shaping these materials into articles.

Extruded products, whether plastic, metal or some other material, are typically uniform in color. In some cases, the extruded products are formed of several layers of material, including one or more visible, outer layers and one or more hidden, inner layers, where these layers may differ in color.

In today's competitive market place, it is important for companies to have an edge that distinguishes their product from a competitor's product. One way to create a product that distinguishes itself from a competitor's product is to provide the product with an aesthetically pleasing appearance. Consumers are typically attracted to products having a visually appealing look.

In the field of extruded products, one method for giving the end products a visually appealing look is to create special color effects in the material of the product. Existing methods for producing color effects in extruded material, such as plastic for example, include lamination techniques, wherein multiple different layers of colored material are joined together to form a multi-colored sheet, and imprinting techniques wherein an imprinted film is adhered to the material. Unfortunately, these processes require treating the material after it has been extruded and formed. This can be both costly and time consuming.

As such, a need clearly exists in the industry to provide an improved method for producing visually appealing color effects in extrudable material, such as plastic and metal.

SUMMARY OF THE INVENTION

As embodied and broadly described herein, the present invention is directed to a process and apparatus for creating color effects in extruded material, such as plastic or metal.

In a broad aspect, the present invention provides a process for creating color effects in extrudable material, such as plastic. The process includes the steps of providing a first flow of viscous material of a first color and a second flow of viscous material of a second color, the second color being different from the first color. Next, the first and second flows are combined to form a stream of viscous material, where the stream is characterized by a first band of the first color and a second band of the second color, the second band being adjacent to the first band. The stream of viscous material is fed through a static mixer such that, upon exiting the static mixer, the stream is further characterized by a third band of a third color, the third color being different from the first and second colors, the third band being located between the first and second bands.

In a specific, non-limiting example of implementation, the process is implemented in a system for manufacturing plastic sheets. The system includes a die, a feed block and at least two extruders.

Each extruder is operative to mix and heat plastic granules, for producing a homogeneous, viscous plastic mixture. In the context of the present invention, at least two of the extruders must be producing plastic mixtures of different colors.

The feed block is operative to combine the flows of viscous plastic output by the different extruders into a single, multi-layer or multi-band, patterned stream of viscous plastic. At least one pair of adjacent bands of the multi-band stream generated by the feed block is characterized by bands of different colors.

Specific to the present invention, the multi-band stream of viscous plastic generated by the feed block is fed through a static mixer pipe. The static mixer is operative to act on the multi-band stream of viscous plastic, for partially mixing the adjacent bands of different colors in order to create a blended, gradation in the colors of the multi-band stream.

The die receives the multi-band stream of viscous plastic from the static mixer pipe, and is operative to shape the multi-band stream into its final product form, such as a sheet or a tube, among many other possibilities.

Under a second broad aspect, the present invention provides a system for creating color effects in extrudable material. The system includes a first extruder for providing a first flow of viscous material of a first color, and a second extruder for providing a second flow of viscous material of a second color, the second color being different from the first color. A feed block combines the first and second flows into a stream of viscous material, the stream being characterized by a first band of the first color and a second band of the second color, the second band being adjacent to the first band. The system also includes a static mixer for receiving the stream from the feed block. The static mixer is operative to partially mix the first and second bands of the stream such that, upon exiting the static mixer, the stream is further characterized by a third band of a third color, the third color being different from the first and second colors, the third band being located between the first and second bands.

Under a third broad aspect, the present invention provides an apparatus for creating color effects in extruded material. The apparatus includes an input for receiving a stream of viscous material, the stream being characterized by a first band of a first color and a second band of a second color, the second band being adjacent to the first band. The apparatus also includes a static mixer operative to mix at least a portion of the first band with at least a portion of the second band such that, upon exiting the static mixer, the stream is further characterized by a third band of a third color, the third color being different from the first and second colors, the third band being located between the first and second bands.

Under a fourth broad aspect, the present invention provides a system for creating color effects in extrudable material. The system comprises a first extruder, a second extruder, a feed block, a static mixer and a co-extruding device. The first and second extruder provide a first flow of viscous material of a first color and a second flow of viscous material of a second color that is different from the first color. The feed block combines the first and second flows into a stream of viscous material characterized by a first band of the first color and a second band of the second color that is adjacent to the first band. The static mixer receives the stream from the feed block and partially mixes the first and second bands such that upon exiting the static mixer, the stream is further characterized by a third band of a third color that is different from the first and second colors. The combining device then combines the stream characterized

by a third color with at least one additional stream of viscous material provided by at least one additional extruder.

BRIEF DESCRIPTION OF THE DRAWINGS

A detailed description of examples of implementation of the present invention is provided hereinbelow with reference to the following drawings, in which:

FIG. **1** illustrates a system for manufacturing plastic sheets, according to a non-limiting example of implementation of the present invention;

FIG. **2** depicts an example of a possible structural configuration for the feed block shown in FIG. **1**;

FIG. **3** is a perspective view of a helical static mixer;

FIG. **4** is a perspective view of a different type of static mixer;

FIG. **5**A illustrates a stream of viscous material as it enters the first element of a helical static mixer;

FIG. **5**B illustrates a stream of viscous material as it exits the third element of a helical static mixer;

FIG. **6**A depicts a sheet of plastic with color gradation effects;

FIG. **6**B depicts a tube of plastic with color gradation effects;

FIG. **7** is a flowchart illustrating the overall process for creating color effects in extruded plastic material, according to an example of implementation of the present invention; and

FIG. **8** depicts a system for manufacturing plastic sheets, according to a variant example of implementation of the present invention.

In the drawings, embodiments of the invention are illustrated by way of example. It is to be expressly understood that the description and drawings are only for the purposes of illustration and as an aid to understanding, and are not intended to be a definition of the limits of the invention.

DETAILED DESCRIPTION

The present invention is directed to a process and apparatus for creating color effects in extruded material, such as plastic or metal.

In the following examples of implementation, the present invention will be described for use in creating color effects in extruded plastic material. However, the invention is not limited to any particular type of material. Rather, the application of the process and apparatus to various different types and grades of extrudable material is possible, and is included within the scope of the present invention.

FIG. **1** depicts a system **100** for manufacturing plastic sheets, according to a non-limiting example of implementation of the present invention. The system **100** is formed of several components, including a die **102**, a feed block **104** and a plurality of extruders $\mathbf{106}_1$, $\mathbf{106}_2$, . . . $\mathbf{106}_N$, where the number N of extruders **106** in the system **100** is at least two.

Note that the system **100** may include three or more extruders **106**, without departing from the scope of the present invention.

Each extruder **106** is operative to mix and heat plastic granules. The granules are heated to a predetermined temperature, sufficient to cause melting of the granules for producing a homogeneous, viscous plastic mixture.

Examples of the different types of thermoplastics that can be extruded include: LDPE, HDPE, ABS, polystyrene, polypropylene, acetates, butyrates, nylons, polyphenylene sulfides, acetals, polycarbonates and thermoplastic rubbers and polyesters, among other possibilities.

Typically, a controlled amount of colorant is added to the mixture in each extruder **106**, for obtaining a viscous plastic mixture of a specific color. Different techniques, known in the art, may be used to color the plastic mixtures in the extruders **106**. In one example, colorant in the form of granules is added to and mixed with the plastic granules before they are fed into the extruder **106** for melting. In another example, colorant in liquid form may be fed into the extruder for mixing with the plastic granules. Alternatively, the non-recycled plastic granules themselves can be pre-colored such that it is not necessary to add colorant to the mixture. In another alternative, recycled plastic granules of a specific color may be used in the extruders **106**, such that the addition of a colorant is not required.

Each extruder **106** is configured to melt and mix the plastic granules such that the mixture **110** is perfectly melted and homogeneous, both in temperature and in color, upon its exit from the extruder **106**.

Note that, with regard to the plastic mixture output by the extruders $\mathbf{106}_1$, $\mathbf{106}_2$, . . . $\mathbf{106}_N$, the term "melted" implies that the mixture is characterized by a viscous or semi-fluid flow. The plastic mixture **110** output by each extruder **106** is also referred to herein as a flow **110** of viscous plastic. Each extruder **106** may be set to a different rate of flow, for example 400 kg/hr, 300 kg/hr, 100 kg/hr or 50 kg/hr, among many other possibilities.

The structure and functionality of such extruders $\mathbf{106}_1$, $\mathbf{106}_2$, . . . $\mathbf{106}_N$ are well known to those skilled in the art, and will not be described in further detail.

In the context of the present invention, at least two of the extruders $\mathbf{106}_1$, $\mathbf{106}_2$, . . . $\mathbf{106}_N$ must be producing plastic mixtures **110** of different colors. In a specific, non-limiting example, the system **100** may include a pair of extruders **106**, each of which is producing a plastic mixture **110** of a different color. In another example, the system **100** may include three extruders **106**, each of which is producing a plastic mixture **110** of a different color. In yet another example, extruder **106**, is producing a plastic mixture **110** of a first color, while the remaining extruders $\mathbf{106}_2$–$\mathbf{106}_N$ are producing a plastic mixture **110** of a second color, different from the first color.

The feed block **104** is operative to combine the flows **110** of viscous plastic output by the different extruders $\mathbf{106}_1$, $\mathbf{106}_2$, . . . $\mathbf{106}_N$ into a single, multi-layer or multi-band, patterned stream of viscous plastic, as will be discussed further below. The terms "layer" and "band" will be used interchangeably hereinafter.

FIG. **2** illustrates a non-limiting example of a possible configuration for the feed block **104**, for the case in which the system **100** is formed of three extruders **106**. Thus, the feed block **104** receives three distinct flows **110** of viscous plastic, each of which is input to the feed block **104** from the associated extruder **106** via a respective feed port **200**.

The feed block **104** also includes a programming section **202**, which receives the flows **110** from the feed ports **200** into corresponding channels **204**. This programming section **202** is operative to shape and position the flows **110** according to a predetermined pattern, whereby the flows undergo a programming of sorts within the channels **204** in order to produce a desired pattern for the multi-band stream of viscous plastic. In the example shown in FIG. **2**, the channels **204** of the programming section **202** are designed to produce a pattern of linear layers. However, different sizes, shapes and layouts for the channels **204** of the programming section **202** may also be used, in order to produce different patterns for the multi-band stream of viscous plastic.

Note that the programming section **202** of the feed block **104** may be designed to divide a particular flow **110** into two or more sub-flows **110**, for producing a different pattern for the multi-band stream of viscous plastic. In a specific example, assume the feed block **104** receives two flows **110**, one that is red in color and the other that is yellow in color. The programming section **202** may divide the red flow **110** into two red sub-flows, and orient these sub-flows such that the yellow flow **110** is sandwiched between the two red sub-flows, according to a particular layout and pattern.

Finally, the feed block **104** includes a transition section **206**, operative to fuse together the separate flows **110**, for generating the patterned, multi-band stream of viscous plastic. As seen in FIG. **2**, the channels **208** of the transition section **206** are oriented such that their output ports **210** are located immediately adjacent one another. As the distinct flows **110** exit the respective output ports **210**, the two flows of the viscous plastics, which are made of the same material and as such have the same fusion points, fuse together into a single, multi-band stream of viscous plastic.

In the context of the present invention, at least one pair of adjacent bands of the multi-band stream generated by the feed block **104** is characterized by bands of different colors. More specifically, at least one pair of adjacent bands is formed of a first band of viscous plastic of a first color and a second band of viscous plastic of a second color. In a specific, non-limiting example, the multi-band stream generated in FIG. **2** is formed of three bands, the first and third of which are orange in color, the second of which is blue in color. Thus, the blue band is sandwiched between the orange bands, such that each pair of adjacent bands is characterized by bands of two different colors.

As mentioned above, the multi-band stream output by the feed block **104** may take on different patterns, without departing from the scope of the present invention. Rather than a horizontal layer pattern, the feed block **104** may combine the different flows **110** according to a vertical layer pattern, a ring pattern, a tube pattern or a pie chart pattern, among many other possibilities. In the case of the ring pattern, each separate flow **110** of viscous plastic is formed into a concentric ring, where the rings of different colors are fused together to form a multi-band tube of viscous plastic, characterized by at least one pair of adjacent rings of different colors. In the case of the tube pattern, the separate flows **110** are positioned with respect to one another such that, when fused together, they form an elongate tube, characterized by at least one pair of adjacent longitudinal bands of different colors.

The use of feed blocks in extrusion processes is well known to those skilled in the art and, as such, the feed block structure and functionality will not be described in further detail herein.

Note that a uniform transition of the flows **110** from the extruders **106** to the feed ports **200** of the feed block **104**, as well as from one component to another within the feed block **104**, without any brusque variations in the channel dimensions, is necessary in order to avoid stagnation of the viscous plastic material.

Specific to the present invention, the multi-band stream of viscous plastic generated by the feed block **104** is fed through a static mixer pipe **108**. The static mixer **108** is operative to act on the multi-band stream of viscous plastic, for partially mixing the adjacent bands of different colors in order to create color effects in the stream, more specifically color gradation effects.

Static mixers are known in the industry to be useful for effectively mixing fluids, by executing the operations of division of flow, radial mixing and flow reversal. The most common type of static mixer is the helical static mixer, as seen in the example of FIG. **3**, which includes a series of static elements positioned adjacent another. Each element is formed of a rectangular plate twisted by 180 degrees, which splits the oncoming flow in half and then turns it through 180 degrees. Each element in the series is rotated 90 degrees with respect to the preceding element, so as to constantly subdivide the flow. When two fluids of different colors enter a static helical mixer pipe, the dividing and overturning motion applied to the fluids by the elements of the mixer results in a gradual mixing of the two fluids. More specifically, as the fluids go along the curves of each element, they are rotated radially towards the pipe wall, or rotated back to the center. Furthermore, as the fluids pass from one element to the next, the fluids are bisected and they change direction to the right or to the left, the force of inertia that suddenly occurs creating a strong flow reversal motion that results in stirring and mixing of the fluids.

Note that, for fluids of different types and/or viscosity, a different number of elements may be required in the static mixer in order to obtain a complete mixing of the two or more fluids from entry into the static mixer to output from the static mixer.

Different types of static mixers exist for uniformly mixing fluids in order to produce a homogenous mixture, such as the example shown in FIG. **4**. Such static mixers are all designed around the same principle, notably passing the viscous fluids through a series of elements that cause the fluids to undergo different flow patterns resulting in the mixture of the fluids. The present invention is not limited to any particular type or design of static mixer.

Under the present invention, the static mixer **108** is characterized by a specific number of elements, such that, upon exit from the static mixer **108**, only a partial mixing of the different colored bands of the multi-band stream has occurred, creating a blended, gradation in the colors of the multi-band stream.

More specifically, upon entering the static mixer pipe **108**, the multi-band stream is characterized by at least one pair of adjacent bands of first and second colors, respectively. The static mixer **108** is operative to mix together a portion of each of the first and second bands such that, when the multi-band stream exits the static mixer **108**, the stream is characterized by a third band of a third color, different from the first and second colors. It should be understood that the bands of color that exit the static mixer **108** are not necessarily clearly defined bands. In a first embodiment there can be a sharp transition between the color of one band and the color of an adjacent band, thereby creating clearly defined bands. However in an alternate embodiment, there can be a slow color gradation from the color of one band to the color of an adjacent band, such that the border between the two bands is not clearly defined. In addition, the shapes of the bands can vary. For example, the bands can be substantially straight, or can be wavy or curved. Likewise, the bands can be horizontally oriented, vertically oriented, or diagonally oriented at any angle between horizontally oriented and vertically oriented.

Typically, when the multi-band stream exits the static mixer **108**, the third band of a third color is a combination of the colors of the first and second bands and is located between the first and second bands. For example, if the stream that is entered into the static mixer includes a first band that is yellow and a second band that is red, then typically, the multi-band stream that exits the static mixer

will have a third band that is a shade of orange that is located between the red band and the yellow band.

Alternatively, when the multi-band stream exits the static mixer **108**, the third band of the third color is not necessarily located between the first and second bands of the first and second color. Instead, it is possible that the third band of the third color is located between two bands of the first color, or two bands of the second color. For example, if the stream that is entered into the static mixer includes a first band that is white and a second band that is blue, then the multi-band stream that exits the static mixer will have a third band that is a lighter shade of blue. As such, it should be understood that for the purposes of the present invention, the third color can be a lighter shade of one of the first and second colors. In addition, it is possible that the multi-band stream that exits the static mixer **108** will not include a band of white, and that instead the multi-band stream includes a band of the light blue located between two bands of the blue that was entered into the static mixer.

Furthermore, one or more additional bands of color may also be present, located between the third band and either one of the first and second bands. These additional bands may be characterized by any one of: the first color, the second color, a blend of the first and second colors, a blend of the first and third colors or a blend of the second and third colors.

Thus, upon exiting the static mixer pipe **108**, the multi-band stream is characterized by a gradation in color from the first color to the second color.

Note that the static mixer pipe **108** may include two or more static mixers, for acting simultaneously on different portions of the multi-band stream as the stream passes through the pipe **108**.

Take for example the case where the system **100** includes a first extruder **106** producing a flow **110** of yellow viscous plastic, and a second extruder **106** producing a flow **110** of blue viscous plastic. Assume that the feed block **104** is operative to combine these two separate flows **110** into a two-layer stream of viscous plastic, characterized by a band of yellow and a band of blue, the two bands being substantially equal in proportion within the stream. With reference to FIGS. **5**A and **5**B, as this multi-layer stream passes through the static mixer pipe **108**, which in this example we will assume has a length of three elements, the two bands of color are partially mixed together. Thus, a third band, green in color, is created between the yellow and blue bands of the stream. Additional bands of color are also created, located between the green band and the yellow band, as well as between the green band and the blue band. Upon its exit from the static mixer **108**, notably after passing through the third element, the multi-band stream of viscous plastic is characterized by a gradation in color from yellow to blue, and includes bands of at least three different colors.

Note that the length of the static mixer **108** that is necessary to obtain a partial mixing of the different colored bands of the multi-band stream of viscous plastic may vary for different implementations of the system **100**. The present invention is not limited to any specific length, or number of elements, for the static mixer pipe **108**.

The selection of an appropriate static mixer **108** is based on certain predetermined parameters, including the diameter, length and orientation of the elements themselves within the static mixer **108**. Furthermore, the determination of the appropriate dimensions for the static mixer **108** will depend on the type of plastic material in use within the system **100**, as well as the respective rate of flow for each extruder **106** and the total rate of flow for the multi-band stream output by the feed block **104**

In a specific, non-limiting example, in order to create a sheet of plastic having a red-orange-yellow appearance once it has exited the static mixer, a first extruder having a 3½ inch diameter at 20 rpm is supplied with new plastic granules and 4% red colorant, and a second extruder having a 4½ inch diameter at 75 rpm is supplied with new plastic granules and 4% yellow colorant. From the extruders, viscous flows of red and yellow plastic are fed into a feedblock that forms the flows of red and yellow plastic into a stream of adjacent bands, which it feeds into a helical static mixer having a 2½ inch diameter made of 3 elements.

In another specific, non-limiting example, in order to create a sheet of plastic having a blue, white and light blue appearance once it has exited the static mixer, a first extruder having a 3½ inch diameter at 50 rpm is supplied with new plastic granules and 2% white colorant, and a second extruder having a 1½ inch diameter at 20 rpm is supplied with new plastic granules and 4% blue colorant. From the extruders, the flows of white and blue viscous plastic are fed into a feedblock that forms the two flows into a three layer stream of blue, white and blue which it feeds into a helical static mixer having a 2 inch diameter made of 6 elements.

Note that different orientations of the static mixer **108** with respect to the longitudinal plane of the multi-band stream will result in different patterns of color gradation in the multi-band stream at the output of the static mixer pipe **108**. For example, in the case of a helical static mixer **108**, if the last element of the static mixer **108** is oriented horizontally with respect to the plane of the multi-band stream of viscous plastic, the static mixer **108** will tend to produce longitudinal bands of color in the multi-band stream. In contrast, if the last element is oriented vertically with respect to the plane of the multi-band stream of viscous plastic, the static mixer **108** will tend to produce vertical bands of color in the multi-band stream.

Furthermore, different orientations of the static mixer **108**, as well as different rates of flow for the different extruders **106**, may produce colored bands of different widths within the multi-band stream of viscous plastic. Thus, the final color pattern achieved in the multi-band stream of viscous plastic by the static mixer **108**, including both band width and color dominance, is dependent on the respective rate of flow of the extruders **106**, as well as on the orientation of the static mixer **108**.

The die **102** receives the multi-band stream of viscous plastic from the static mixer pipe **108**, and is operative to shape the multi-band stream into its final product form, such as a sheet or a tube, among many other possibilities. In the non-limiting example shown in FIG. **1**, the die **102** is operative to produce sheets of plastic **112** from the multi-band stream of viscous plastic. Different shapes and sizes of dies may be used within the system **100** to generate different forms and types of plastic products. The structure and functionality of such dies are well known to those skilled in the art, and as such will not be described in further detail herein.

FIGS. **6**A and **6**B illustrate two examples of products that may be formed by the die **102**. In FIG. **6**A is shown an example of a sheet of plastic resulting from the two-color (yellow and blue) extrusion process described above. In its final product form, the sheet of plastic is characterized by bands of yellow (the color from the first extruder **106**), bands of blue (the color from the second extruder **106**) and bands of green, the latter resulting from the mixing of the yellow

and blue bands by the static mixer **108**. Between the yellow and blue bands is a blended, color gradation, from one color to the other.

In FIG. **6**B is shown an example of a tube of plastic resulting from the same two-color extrusion process.

The product resulting from the extrusion process described herein, such as the sheet or tube of plastic, may be used as is, in different applications. For example, the sheets of plastic may be cut out to form tobogganing carpets, also referred to as crazy carpets. Alternatively, the product resulting from the extrusion process may be thermoformed into different shapes or final products. For example, the sheets of plastic characterized by the color gradation effects may be thermoformed into pedal boats, kayaks, canoes or other similar watercraft products. They may also be thermoformed into recreational products, such as toboggans and pools, among many other possibilities. Whether thermoformed or not, the main use and advantage of the extruded product resulting from the above-described extrusion process is to provide an esthetically appealing appearance to the consumer or user.

In FIG. **7** is shown a flowchart illustrating the overall process implemented by the system **100** for creating color gradation effects in extruded plastic material. At step **700**, a first flow of viscous plastic of a first color is provided. At step **702**, a second flow of viscous plastic of a second color, different from the first color, is provided. At step **704**, the first and second flows are combined together to form a stream of viscous plastic, where this stream is characterized by a first band of the first color and a second band of the second color, the second band being adjacent to the first band. Next, at step **706**, the stream is fed through a static mixer operative to partially mix the first and second bands such that, upon exiting the static mixer, the stream is further characterized by a third band of a third color, different from the first and second colors, located between the first and second bands.

Note that the above process is applicable to various different types of extrudable material, and is not limited to plastic applications.

FIG. **8** illustrates a variant example of implementation of the present invention, in which the system **800** manufactures plastic products, such as plastic sheets, with color gradation effects being provided only in one or more surface layers of the product. In this case, extruder $\mathbf{806}_1$, which includes extruders $\mathbf{806}_{1A}$, $\mathbf{806}_{1B}$, . . . $\mathbf{806}_{1N}$, in combination with the feed block **804** and the static mixer **808**, produces a stream of viscous plastic $\mathbf{810}_1$ characterized by color gradation effects, in the same way as described above with regard to the system **100**. This stream $\mathbf{810}_1$ is then fed into a combining device where it is combined with the separate flows **800** of viscous plastic output by the extruders $\mathbf{806}_2$, . . . $\mathbf{806}_N$. In the specific example shown in FIG. **8**, the combining device includes the feed block **812**. The feed block **812** produces a co-extruded stream of viscous plastic $\mathbf{810}_2$, having at least one layer, typically a surface layer, characterized by the color gradation effects. The die **814** then receives this co-extruded stream $\mathbf{810}_2$, and is operative to mold the plastic stream into its final form, for example a sheet or a tube.

Note that the feed blocks **804** and **812** are similar in structure and functionality to that described above with regard to the feed block **104**.

In an alternative embodiment wherein the die **814** is able to combine the streams from the static mixer pipe **808** and the extruders $\mathbf{806}_2$–$\mathbf{806}_N$ into a co-extruded sheet prior to forming the sheet into its final form, the feedblock **812** can be omitted, and the combining device simply includes the die **814**.

Thus, in this variant example of implementation, plastic products are formed in which the color gradation effects may be limited to an outer surface of the product. Note that, in this case, one or more of the extruders $\mathbf{806}_2$, . . . $\mathbf{806}_N$ may be fed with recycled plastic granules, if the respective one or more layers of plastic generated by these extruders are not visible on the finished product. Alternatively, each of the extruders $\mathbf{806}_2$, . . . $\mathbf{806}_N$ may be producing a plastic mixture of a predetermined and specific color, depending on the specific applications and end products being formed.

Note that any one of the extruders $\mathbf{806}_2$, . . . $\mathbf{806}_N$ may be set up in the same way as extruder $\mathbf{806}_1$, such that two or more layers of the final plastic product are characterized by color gradation effects. These color gradation effects may differ from one layer to another, since the extruder flow rates and static mixer orientations may vary from one extruder arrangement to the other.

Alternatively, the die **814** may be provided with multiple feed ports, such that the die **814** itself could directly receive the stream of viscous plastic $\mathbf{810}_1$ from the extruder $\mathbf{806}_1$, as well as the flows **800** from the extruders $\mathbf{806}_2$, . . . $\mathbf{806}_N$. Thus, the die **814** would act to combine the stream **810**, and the flows **800** into the co-extruded stream of viscous plastic $\mathbf{810}_2$, after which the die **814** would shape the stream $\mathbf{810}_2$ into the final product form. Note that, in this case, the die **814** takes on the responsibility of the feed block **812**, which is no longer required within the system **800**.

Although various embodiments have been illustrated, this was for the purpose of describing, but not limiting, the invention. Various modifications will become apparent to those skilled in the art and are within the scope of this invention, which is defined more particularly by the attached claims.

I claim:

1. A process for creating color effects in extrudable material, said process comprising:

a) providing a first flow of viscous material of a first color;

b) providing a second flow of viscous material of a second color, said second color being different from said first color;

c) combining in a predetermined pattern said first flow and said second flow to form a stream of viscous material, said stream comprising a first band of said first color and a second band of said second color, said second band being adjacent to said first band;

d) in a static mixer having a predetermined number of elements and a predetermined diameter, applying a predetermined dividing, overturning and combining motion to said stream for a predetermined number of times thereby partially mixing said first band and said second band, such that said first and second bands remain in the stream and said stream further comprises a third band of a third color that is different from said first and second colors,

wherein said predetermined dividing, overturning and combining motion is determined by said predetermined number of elements and said predetermined diameter of the static mixer, and wherein said predetermined number of elements and said predetermined diameter are determined by a parameter selected from the type of viscous material, viscosity of said first and second flow of viscous material, the respective rate of flow of said first and second flows, the total rate of flow of said stream, and combinations thereof.

2. A process as defined in claim **1**, wherein said third band is located between said first band and said second band.

3. A process as defined in claim **1**, wherein said third color is a mix of said first and second colors.

4. A process as defined in claim **1**, wherein said first, second and third bands of said stream form horizontal layers.

5. A process as defined in claim **1**, wherein said first, second and third bands of said stream form vertical layers.

6. A process as defined in claim **1**, wherein said first, second and third bands of said stream form concentric layers.

7. A process as defined in claim **1**, wherein said dividing, overturning and combining motion for a predetermined specific number of times is provided by a static mixer.

8. A process as defined in claim **7**, wherein said static mixer includes a helical mixer.

9. A process as defined in claim **1**, wherein after being submitted to said dividing, overturning and combining motion for a predetermined specific number of times, said stream further comprises at least one additional band located between said third band and either one of said first and second bands.

10. A process as defined in claim **9**, wherein said at least one additional band comprises a color selected from: said first color; said second color; a blend of said first and second colors; a blend of said first and third colors; and a blend of said second and third colors.

11. A process as defined in claim **10**, wherein said at least one additional band provides for a gradation in color from either one of said first and second colors to said third color.

12. A process as defined in claim **1**, wherein after applying the dividing, overturning and combining motion for a predetermined number of times, said process includes the step of forming said stream of viscous material into a sheet.

13. A process as defined in claim **1**, wherein after applying the dividing, overturning and combining motion for a predetermined number of times, said process includes the step of forming said stream of viscous material into a tube.

14. A process as defined in claim **1**, wherein said viscous material is viscous plastic.

15. A process as defined in claim **1**, wherein said first, second and third bands of said stream form diagonal layers.

16. A process for manufacturing a sheet from extrudable material, said process comprising:

a) providing a first flow of viscous material of a first color;

b) providing a second flow of viscous material of a second color, said second color being different from said first color;

c) combining in a predetermined pattern said first flow and said second flow to form a stream of viscous material, said stream comprising a first band of said first color and a second band of said second color, said second band being adjacent to said first band;

d) in a static mixer having a predetermined number of elements and a predetermined diameter, applying a predetermined dividing, overturning and combining motion to said stream for a predetermined number of times thereby partially mixing said first band and said second band, such that said first and second bands remain in the stream and said stream further comprises a third band of a third color that is different from said first and second colors, said third band being located between said first and second bands;

e) after applying the dividing, overturning and combining motion for a predetermined number of times, feeding said stream through a die for forming a sheet of material comprising a gradation of color,

wherein said predetermined dividing, overturning and combining motion is determined by said predetermined number of elements and said predetermined diameter of the static mixer, and wherein said predetermined number of elements and said predetermined diameter are determined by a parameter selected from the type of viscous material, viscosity of said first and second flow of viscous material, the respective rate of flow of said first and second flows, the total rate of flow of said stream, and combinations thereof.

17. A process as defined in claim **16** for manufacturing plastic articles comprising color gradation effects.

18. A process as defined in claim **16** for manufacturing plastic kayaks comprising color gradation effects.

* * * * *