ITUPublications
Recommendations

International Telecommunication Union
Standardization Sector

Recommendation

ITU-T G.9807.1 (02/2023)

SERIES G: Transmission systems and media, digital systems and networks

Access networks – Optical line systems for local and access networks

10-Gigabit-capable symmetric passive optical network (XGS-PON)

Nokia of America Corporation *et al.*
Exhibit 1010
IPR2024-00899, USPN 9,806,892
1 of 290

ITU-T G-SERIES RECOMMENDATIONS

TRANSMISSION SYSTEMS AND MEDIA, DIGITAL SYSTEMS AND NETWORKS

INTERNATIONAL TELEPHONE CONNECTIONS AND CIRCUITS	G.100–G.199
GENERAL CHARACTERISTICS COMMON TO ALL ANALOGUE CARRIER-TRANSMISSION SYSTEMS	G.200–G.299
INDIVIDUAL CHARACTERISTICS OF INTERNATIONAL CARRIER TELEPHONE SYSTEMS ON METALLIC LINES	G.300–G.399
GENERAL CHARACTERISTICS OF INTERNATIONAL CARRIER TELEPHONE SYSTEMS ON RADIO-RELAY OR SATELLITE LINKS AND INTERCONNECTION WITH METALLIC LINES	G.400–G.449
COORDINATION OF RADIOTELEPHONY AND LINE TELEPHONY	G.450–G.499
TRANSMISSION MEDIA AND OPTICAL SYSTEMS CHARACTERISTICS	G.600–G.699
DIGITAL TERMINAL EQUIPMENTS	G.700–G.799
DIGITAL NETWORKS	G.800–G.899
DIGITAL SECTIONS AND DIGITAL LINE SYSTEM	G.900–G.999
MULTIMEDIA QUALITY OF SERVICE AND PERFORMANCE – GENERIC AND USER-RELATED ASPECTS	G.1000–G.1999
TRANSMISSION MEDIA CHARACTERISTICS	G.6000–G.6999
DATA OVER TRANSPORT – GENERIC ASPECTS	G.7000–G.7999
PACKET OVER TRANSPORT ASPECTS	G.8000–G.8999
ACCESS NETWORKS	G.9000–G.9999
Metallic access networks	G.9700–G.9799
Optical line systems for local and access networks	**G.9800–G.9899**
In premises networks	G.9900–G.9999

For further details, please refer to the list of ITU-T Recommendations.

Recommendation ITU-T G.9807.1

10-Gigabit-capable symmetric passive optical network (XGS-PON)

Summary

Recommendation ITU-T G.9807.1 describes a 10-Gigabit-capable symmetric passive optical network (XGS-PON) system in an optical access network for residential, business, mobile backhaul and other applications. This system operates over a point-to-multipoint optical access infrastructure at the nominal data rate of 10 Gbit/s both in the downstream and the upstream directions. This Recommendation contains the common definitions, acronyms, abbreviations, conventions, general requirements, physical media dependent layer requirements, and transmission convergence layer requirements of the XGS-PON system.

This revision adds an annex specifying out of band noise limits on XGS-PON optical network units (ONUs) to reduce the impact on other systems coexisting on the same optical distribution network (ODN).

History

Edition	Recommendation	Approval	Study Group	Unique ID*
1.0	ITU-T G.9807.1	2016-06-22	15	11.1002/1000/12834
1.1	ITU-T G.9807.1 (2016) Amd. 1	2017-10-07	15	11.1002/1000/13293
1.2	ITU-T G.9807.1 (2016) Cor. 1	2020-03-15	15	11.1002/1000/14220
1.3	ITU-T G.9807.1 (2016) Amd. 2	2020-10-29	15	11.1002/1000/14530
2.0	ITU-T G.9807.1	2023-02-22	15	11.1002/1000/15133

Keywords

10 Gigabit, co-existence, dual-rate, general requirement, optional wavelength set, passive optical network, physical medium dependent, PLOAM, PMD, PON, symmetric line rates, TC, transmission conformance, XGS-PON, XGS-PON TC.

* To access the Recommendation, type the URL http://handle.itu.int/ in the address field of your web browser, followed by the Recommendation's unique ID. For example, http://handle.itu.int/11.1002/1000/11830-en.

Exhibit 1010
IPR2024-00899, USPN 9,806,892
3 of 290

FOREWORD

The International Telecommunication Union (ITU) is the United Nations specialized agency in the field of telecommunications, information and communication technologies (ICTs). The ITU Telecommunication Standardization Sector (ITU-T) is a permanent organ of ITU. ITU-T is responsible for studying technical, operating and tariff questions and issuing Recommendations on them with a view to standardizing telecommunications on a worldwide basis.

The World Telecommunication Standardization Assembly (WTSA), which meets every four years, establishes the topics for study by the ITU-T study groups which, in turn, produce Recommendations on these topics.

The approval of ITU-T Recommendations is covered by the procedure laid down in WTSA Resolution 1.

In some areas of information technology which fall within ITU-T's purview, the necessary standards are prepared on a collaborative basis with ISO and IEC.

NOTE

In this Recommendation, the expression "Administration" is used for conciseness to indicate both a telecommunication administration and a recognized operating agency.

Compliance with this Recommendation is voluntary. However, the Recommendation may contain certain mandatory provisions (to ensure, e.g., interoperability or applicability) and compliance with the Recommendation is achieved when all of these mandatory provisions are met. The words "shall" or some other obligatory language such as "must" and the negative equivalents are used to express requirements. The use of such words does not suggest that compliance with the Recommendation is required of any party.

INTELLECTUAL PROPERTY RIGHTS

ITU draws attention to the possibility that the practice or implementation of this Recommendation may involve the use of a claimed Intellectual Property Right. ITU takes no position concerning the evidence, validity or applicability of claimed Intellectual Property Rights, whether asserted by ITU members or others outside of the Recommendation development process.

As of the date of approval of this Recommendation, ITU had received notice of intellectual property, protected by patents/software copyrights, which may be required to implement this Recommendation. However, implementers are cautioned that this may not represent the latest information and are therefore strongly urged to consult the appropriate ITU-T databases available via the ITU-T website at http://www.itu.int/ITU-T/ipr/.

© ITU 2023

All rights reserved. No part of this publication may be reproduced, by any means whatsoever, without the prior written permission of ITU.

Exhibit 1010
IPR2024-00899, USPN 9,806,892
4 of 290

Table of Contents

		Page
1	Scope	1
2	References	1
3	Definitions	4
3.1	Terms defined elsewhere	4
3.2	Terms defined in this Recommendation	7
4	Abbreviations and acronyms	10
5	Conventions	17
5.1	Optical access concepts	17
5.2	Multi-wavelength PON system reference points	18
5.3	Optical power and loss parameters	18
5.4	Dynamic range, sensitivity and overload	19
5.5	Sensitivity and overload in the presence of FEC	19
5.6	Reach and distance	19
5.7	Use of the term PON	20
5.8	Use of the term ODN	21
5.9	Use of the terms ONU and ONT	21
5.10	Use of the terms T-CONT and Alloc-ID	21
5.11	Use of the terms bandwidth assignment and bandwidth allocation	22
5.12	Use of the terms band and range	22
5.13	Transmitter enable control and associated transient times	22
6	Overview of the XGS-PON Recommendation	23
Annex A – General requirements of XGS-PON		24
A.5	Architecture of the optical access network	25
A.6	Migration scenarios	32
A.7	Service requirements	37
A.8	Physical layer requirements	42
A.9	System level requirements	44
A.10	Operational requirements	46
A.11	Resilience and protection on ODN	47
Appendix A.I – Examples of practical XGS-PON system architecture		48
Appendix A.II – Synchronizing requirements for wireless in CBU scenario		61
Appendix A.III – External access network back-up		62
Appendix A.IV – Operation with IEEE 1588		65
Appendix A.V – Use cases for frequency and time of day synchronization		66
Appendix A.VI – Transport of ESMC messages over PON		71
Annex B – Physical media dependent (PMD) layer specifications of XGS-PON		73
B.6	Architecture of the optical access network	73

Exhibit 1010
IPR2024-00899, USPN 9,806,892
5 of 290

Page

B.7 Services ... 75
B.8 User network interface and service node interface ... 75
B.9 Optical network requirements ... 75
B.10 X/S tolerance masks ... 90
B.11 Upstream physical layer overhead ... 93

Annex B.A – ONU out-of-band power spectral density ... 94

Appendix B.I – Examples of wavelength allocation for XGS-PON, G-PON and video distribution services ... 96

Appendix B.II – Physical layer measurements required to support optical layer supervision ... 97

Appendix B.III – Allocation of the physical layer overhead time ... 99

Appendix B.IV – Jitter budget specifications ... 102

Appendix B.V – Measurement of burst mode acquisition time and burst mode eye opening at OLT ... 106

Appendix B.VI – Upstream PMD examples for XGS-PON ... 109

Appendix B.VII – Raman analysis in XGS-PON optional wavelength set ... 111

Annex C – Transmission convergence layer specifications of XGS-PON ... 113

C.6 XGS-PON transmission convergence layer overview ... 113
C.7 Resource allocation and quality of service ... 125
C.8 XGS-PON transmission convergence framing sublayer overview ... 134
C.9 XGS-PON encapsulation method ... 141
C.10 XGS-PON PHY adaptation sublayer ... 146
C.11 PLOAM messaging channel ... 156
C.12 XGS-PON ONU activation ... 176
C.13 XGS-PON OLT and ONU timing relationships ... 186
C.14 XGS-PON performance monitoring, supervision and defects ... 196
C.15 XGS-PON security ... 204
C.16 XGS-PON power management ... 222
C.17 Channel management ... 231
C.18 XGS-PON system protection ... 231
C.19 Rogue behaviour and its mitigation ... 236

Annex C.A – Hybrid error control (HEC) decoding and scrambler sequence codes ... 239

Annex C.B – Forward error-correction using shortened Reed-Solomon codes ... 243

Annex C.C – Secure mutual authentication via OMCI ... 244

Annex C.D – Secure mutual authentication using IEEE 802.1X ... 245

Annex C.E – Auxiliary management and control channel ... 246

Annex C.F – Tuning sequences ... 247

Annex C.G – Transcoded framing with FEC and OAM for PtP WDM AMCC TC ... 248

Exhibit 1010
IPR2024-00899, USPN 9,806,892
6 of 290

Page

Appendix C.I – Downstream line data pattern conditioning 249

Appendix C.II – Time of day derivation and error analysis 250

Appendix C.III – Burst profiles 254

Appendix C.IV – Golden vectors 256

Appendix C.V – Protection examples 260

Appendix C.VI – ICTP: Inter-channel-termination protocol 261

Appendix C.VII – ONU equalization delay coordination across TWDM channels 265

Appendix C.VIII – PON-ID examples 266

Appendix I – Introduction of PMD parameters 267

I.1 Relationship between OMA, extinction ratio, and average power 267

Appendix II – General statements on the relationship with NG-PON2 TC layer requirements 268

Appendix III – Use of 10GEPON 10GBASE-PR-D3 (OLT) and 10GBASE-PR-U3 (ONU) optical modules with XGS-PON symmetric 275

Bibliography 279

Exhibit 1010
IPR2024-00899, USPN 9,806,892
7 of 290

Recommendation ITU-T G.9807.1

10-Gigabit-capable symmetric passive optical network (XGS-PON)

1 Scope

This Recommendation defines a 10-Gigabit-capable symmetric passive optical network (XGS-PON) system in an optical access network for residential, business, mobile backhaul and other applications. XGS-PON systems are able to operate on the same optical distribution network (ODN) as XG-PON systems. The XGS-PON systems are capable of operating at the same wavelengths as an existing XG-PON system or operating at the gigabit-capable passive optical network (G-PON) wavelengths. Co-existence of XGS-PON with G-PON, 10-gigabit passive optical network (XG-PON) and next generation passive optical network 2 (NG-PON2) is supported.

Maximal reuse of existing ITU-T PON Recommendations is made. The XGS-PON transmission convergence (TC) layer is based on the NG-PON2 and XG-PON TC layers. No hardware-affecting modifications to the TC-layers are needed. It is expected that TC layer devices designed for time and wavelength division multiplexing (TWDM) PON will be able to operate as XGS-PON TC layer devices. The downstream optical physical medium dependent (PMD) specifications are derived from the XG-PON PMD.

2 References

The following ITU-T Recommendations and other references contain provisions which, through reference in this text, constitute provisions of this Recommendation. At the time of publication, the editions indicated were valid. All Recommendations and other references are subject to revision; users of this Recommendation are therefore encouraged to investigate the possibility of applying the most recent edition of the Recommendations and other references listed below. A list of the currently valid ITU-T Recommendations is regularly published. The reference to a document within this Recommendation does not give it, as a stand-alone document, the status of a Recommendation.

[ITU-T G.652] Recommendation ITU-T G.652 (2016), *Characteristics of a single-mode optical fibre and cable*.

[ITU-T G.657] Recommendation ITU-T G.657 (2016), *Characteristics of a bending-loss insensitive single-mode optical fibre and cable for the access network*.

[ITU-T G.703] Recommendation ITU-T G.703 (2016), *Physical/electrical characteristics of hierarchical digital interfaces*.

[ITU-T G.709] Recommendation ITU-T G.709/Y.1331 (2020), *Interfaces for the optical transport network*.

[ITU-T G.783] Recommendation ITU-T G.783 (2006), *Characteristics of synchronous digital hierarchy (SDH) equipment functional blocks*.

[ITU-T G.808.1] Recommendation ITU-T G.808.1 (2014), *Generic protection switching – Linear trail and subnetwork protection*.

[ITU-T G.810] Recommendation ITU-T G.810 (1996), *Definitions and terminology for synchronization networks*.

[ITU-T G.813] Recommendation ITU-T G.813 (2003), *Timing characteristics of SDH equipment slave clocks (SEC)*.

[ITU-T G.825] Recommendation ITU-T G.825 (2000), *The control of jitter and wander within digital networks which are based on the synchronous digital hierarchy (SDH)*.

Exhibit 1010
IPR2024-00899, USPN 9,806,892
9 of 290

[ITU-T G.872] Recommendation ITU-T G.872 (2019), *Architecture of the optical transport network*.

[ITU-T G.902] Recommendation ITU-T G.902 (1995), *Framework Recommendation on functional access networks (AN) – Architecture and functions, access types, management and service node aspects*.

[ITU-T G.957] Recommendation ITU-T G.957 (2006), *Optical interfaces for equipments and systems relating to the synchronous digital hierarchy*.

[ITU-T G.959.1] Recommendation ITU-T G.959.1 (2018), *Optical transport network physical layer interfaces*.

[ITU-T G.982] Recommendation ITU-T G.982 (1996), *Optical access networks to support services up to the ISDN primary rate or equivalent bit rates*.

[ITU-T G.983.1] Recommendation ITU-T G.983.1 (2005), *Broadband optical access systems based on Passive Optical Networks (PON)*.

[ITU-T G.983.3] Recommendation ITU-T G.983.3 (2001), *A broadband optical access system with increased service capability by wavelength allocation*.

[ITU-T G.984.1] Recommendation ITU-T G.984.1 (2008), *Gigabit-capable passive optical networks (GPON): General characteristics*.

[ITU-T G.984.2] Recommendation ITU-T G.984.2 (2019), *Gigabit-capable Passive Optical Networks (GPON): Physical Media Dependent (PMD) layer specification*.

[ITU-T G.984.5] Recommendation ITU-T G.984.5 (2022), *Gigabit-capable passive optical networks (G-PON): Enhancement band*.

[ITU-T G.984.6] Recommendation ITU-T G.984.6 (2008), *Gigabit-capable passive optical networks (GPON): Reach extension*.

[ITU-T G.987] Recommendation ITU-T G.987 (2012), *10-Gigabit-capable passive optical network (XG-PON) systems: Definitions, abbreviations and acronyms*.

[ITU-T G.987.1] Recommendation ITU-T G.987.1 (2016), *10 Gigabit-capable passive optical networks (XG-PON): General requirements*.

[ITU-T G.987.2] Recommendation ITU-T G.987.2 (2023), *10-Gigabit-capable passive optical networks (XG-PON): Physical media dependent (PMD) layer specification*.

[ITU-T G.987.3] Recommendation ITU-T G.987.3 (2014), *10-Gigabit-capable passive optical networks (XG-PON): Transmission convergence (TC) Layer specification*.

[ITU-T G.987.4] Recommendation ITU-T G.987.4 (2012), *10-Gigabit-capable passive optical networks (XG-PON): Reach extension*.

[ITU-T G.988] Recommendation ITU-T G.988 (2022), *ONU management and control interface (OMCI) specification*.

[ITU-T G.989] Recommendation ITU-T G.989 (2015), *40-Gigabit-capable passive optical networks (NG-PON2): Definitions, abbreviations and acronyms*.

[ITU-T G.989.3] Recommendation ITU-T G.989.3 (2021), *40-Gigabit-capable passive optical* networks (NG PON2): *Transmission convergence layer specification*.

[ITU-T G.992.5] Recommendation ITU-T G.992.5 (2009), *Asymmetric digital subscriber line 2 transceivers (ADSL2) – Extended bandwidth ADSL2 (ADSL2plus)*.

Exhibit 1010
IPR2024-00899, USPN 9,806,892
10 of 290

[ITU-T G.993.2] Recommendation ITU-T G.993.2 (2019), *Very high speed digital subscriber line transceivers 2 (VDSL2)*.

[ITU-T G.8261] Recommendation ITU-T G.8261/Y.1361 (2019), *Timing and synchronization aspects in packet networks*.

[ITU-T G.8262] Recommendation ITU-T G.8262/Y.1362 (2018), *Timing characteristics of a synchronous Ethernet equipment slave clock*.

[ITU-T G.9701] Recommendation ITU-T G.9701 (2019), *Fast access to subscriber terminals (G.fast) – Physical layer specification*.

[ITU-T G.9807.2] Recommendation ITU-T G.9807.2 (2017), *10 Gigabit-capable passive optical networks (XG(S)-PON): Reach extension*.

[ITU-T G.9960] Recommendation ITU-T G.9960 (2018), *Unified high-speed wireline-based home networking transceivers – System architecture and physical layer specification*.

[ITU-T G.9961] Recommendation ITU-T G.9961 (2018), *Unified high-speed wireline-based home networking transceivers – Data link layer specification*.

[ITU-T I.430] Recommendation ITU-T I.430 (1995), *Basic user-network interface – Layer 1 specification*.

[ITU-T I.432.1] Recommendation ITU-T I.432.1 (1999), *B-ISDN user-network interface – physical layer specification: General characteristics*.

[ITU-T J.185] Recommendation ITU-T J.185 (2012), *Transmission equipment for transferring multi-channel television signals over optical access networks by frequency modulation conversion*.

[ITU-T J.186] Recommendation ITU-T J.186 (2008), *Transmission equipment for multi-channel television signals over optical access networks by sub-carrier multiplexing (SCM)*.

[ITU-T L.66] Recommendation ITU-T L.66 (2007), *Optical fibre cable maintenance criteria for in-service fibre testing in access networks*.

[ITU-T Y.2001] Recommendation ITU-T Y.2001 (2004), *General overview of NGN*.

[ITU-T Y.2201] Recommendation ITU-T Y.2201 (2009), *Requirements and capabilities for ITU-T NGN*.

[IEC 60825-2] IEC 60825-2 (2021), *Safety of laser products – Part 2: Safety of optical fibre communication systems (OFCS)*.

[ATIS-0300220] ATIS-0300220.2018, *Structure for the Representation of the Communications Industry Manufacturers, Suppliers, and Related Service Companies for Information Exchange*.

[BBF TR-156] Broadband Forum TR-156 (2017), *Using GPON Access in the context of TR-101*.

[IEEE 802.3] IEEE 802.3-2022, *IEEE Standard for Ethernet*.

[IEEE 1588] IEEE 1588-2008, *IEEE Standard for a Precision Clock Synchronization Protocol for Networked Measurement and Control Systems*.

[MEF 6.1] MEF Technical Specification MEF 6.1 (2008), *Ethernet Services Definitions – Phase 2*.

[MEF 10.1] MEF Technical Specification MEF 10.1(2006), *Ethernet Services Attributes Phase 2*.

Exhibit 1010
IPR2024-00899, USPN 9,806,892
11 of 290

[NIST FIPS-197] NIST Federal Information Processing Standards Publication 197 (2023), *Advanced Encryption Standard (AES)*.

[NIST SP800-38A] NIST Special Publication 800-38A (2001), *Recommendation for Block Cipher Modes of Operation – Methods and Techniques*.

[NIST SP800-38B] NIST Special Publication 800-38B (2005), *Recommendation for Block Cipher Modes of Operation: The CMAC Mode for Authentication*.

3 Definitions

3.1 Terms defined elsewhere

This Recommendation uses the following terms defined elsewhere:

3.1.1 access network (AN) [ITU-T G.902]: An implementation comprising those entities (such as cable plant, transmission facilities, etc.) which provide the required transport bearer capabilities for the provision of telecommunications services between a service node interface (SNI) and each of the associated user-network interfaces (UNI).

3.1.2 activation [ITU-T G.989]: A set of distributed procedures executed by the OLT and the ONUs that allows an inactive ONU to join or resume operations on the PON. The activation process includes three phases: parameter learning, serial number acquisition, and ranging.

3.1.3 activation cycle [ITU-T G.989]: An interval of continuous ONU operation between two consecutive re-entries of the ONU state machine into the initial state.

3.1.4 bandwidth allocation [ITU-T G.989]: An upstream transmission opportunity granted by the OLT for a specified time interval to a specified traffic-bearing entity within an ONU.

3.1.5 dispersion [ITU-T G.989]: A physical phenomenon comprising the dependence of the phase or group velocity of a light wave in the medium on its propagation characteristics such as optical frequency (wavelength) or polarization mode.

3.1.6 dynamic bandwidth assignment (DBA) [ITU-T G.989]: A process by which the OLT distributes upstream PON capacity between the traffic-bearing entities within ONUs, based on dynamic indication of their traffic activity and their configured traffic contracts.

3.1.7 dynamic range [ITU-T G.989]: An optical receiver characteristic that is equal to the ratio of the receiver overload to the receiver sensitivity.

3.1.8 effective key length [ITU-T G.989]: The number of randomly generated bits of a cryptographic key. The effective key length may be less than the nominal key length of a particular cryptosystem, if a part of the key is replaced by a well-known bit pattern.

3.1.9 embedded OAM [ITU-T G.989]: An operation and management channel between the OLT and the ONUs that utilizes the structured overhead fields of the downstream XGTC frame and upstream XGTC burst and supports time-sensitive functions.

3.1.10 equalization delay (EqD) [ITU-T G.989]: The requisite delay assigned by the OLT to an individual ONU in order to ensure that the ONU's transmissions are precisely aligned on a common OLT-based upstream frame reference. The ONU's equalization delay is assigned as a result of ranging and is subject to in-service updates in the course of burst arrival phase monitoring.

3.1.11 Ethernet LAN service (E-LAN) [MEF 6.1]: An Ethernet service type that is based on a Multipoint-to-Multipoint Ethernet virtual connection.

3.1.12 Ethernet line service (E-Line) [MEF 6.1]: An Ethernet service type that is based on a point-to-point Ethernet virtual connection.

Exhibit 1010
IPR2024-00899, USPN 9,806,892
12 of 290

3.1.13 Ethernet tree service (E-Tree) [MEF 6.1]: An Ethernet service type that is based on a Rooted-Multipoint Ethernet virtual connection.

3.1.14 Ethernet virtual connection (EVC) [MEF 6.1]: An association of UNIs to which the exchange of service frames is limited.

3.1.15 extinction ratio (ER) [ITU-T G.989]: With respect to a digital On-Off keying signal generated by an optical transmitter, the ratio of the average optical power level at the centre of the binary digit corresponding to the high intensity of light to the average optical power level at the centre of a binary digit corresponding to the low intensity of light.

For the burst mode signal, averaging is performed over the time periods when the transmitter is enabled, but excluding the associated transient times (see clause 5.13 of [ITU-T G.989]). For the continuous mode signal, averaging is performed over the entire signal string.

3.1.16 gigabit-capable passive optical network (G-PON) [ITU-T G.987]: A PON system supporting transmission rates in excess of 1.0 Gbit/s in at least one direction, and implementing the suite of protocols specified in the ITU-T G.984 series of Recommendations.

3.1.17 jitter (timing jitter) [ITU-T G.810]: The short-term variations of the significant instances of a digital signal from their ideal positions in time (where "short-term" implies that these variations are of frequency greater than or equal to 10 Hz).

3.1.18 next generation PON (NG-PON) [ITU-T G.989]: In the context of ITU-T standards development activity, a generic term referencing the PON system evolution beyond G-PON. The concept of NG-PON currently includes NG-PON1, where the ODN is maintained from B-PON and G-PON, and NG-PON2, where a redefinition of the ODN is allowed from that defined in B-PON and G-PON.

3.1.19 NG-PON1 [ITU-T G.989]: A PON system with a nominal aggregate capacity of 10 Gbit/s in the downstream direction. The NG-PON1 system is represented by XG-PON.

3.1.20 NG-PON2 [ITU-T G.989]: A PON system with a nominal aggregate capacity of 40 Gbit/s in the downstream direction and 10 Gbit/s in the upstream direction, and implementing the suite of protocols specified in the ITU-T G.989 series Recommendations. An NG-PON2 system is composed of a set of TWDM channels (specified in clause 3.2.26 of [ITU-T G.989]) and/or a set of PtP WDM channels (specified in clause 3.2.23 of [ITU-T G.989]).

3.1.21 nominal line rate [ITU-T G.989]: The total number of bits that can be physically transferred per unit of time over a communication link. Nominal line rate accounts for useful data as well as for all possible protocol overheads and necessarily exceeds the effective data rate on any given protocol level.

3.1.22 ONU management and control interface (OMCI) [ITU-T G.989]: An operation and management channel between the OLT and an ONU that is message-based and employs an extendable management information base.

3.1.23 optical access network (OAN) [ITU-T G.989]: A part of an access network whose network elements are interconnected by optical communication channels. Note: An OAN may or may not extend all the way to the UNI, so that the user-side interface of the OAN does not necessarily coincide with the UNIs of the AN.

3.1.24 optical distribution network (ODN) [ITU-T G.989]: A point-to-multipoint optical fibre infrastructure. A *simple* ODN is entirely passive and is represented by a single-rooted point-to-multipoint tree of optical fibres with splitters, combiners, filters, and possibly other passive optical components. A *composite* ODN consists of two or more passive *segments* interconnected by active devices, each of the segments being either an optical trunk line segment or an optical distribution segment. A Passive optical distribution segment is a simple ODN itself. Two ODNs with distinct roots can share a common subtree.

Exhibit 1010
IPR2024-00899, USPN 9,806,892
13 of 290

3.1.25 optical distribution segment (ODS) [ITU-T G.989]: A simple ODN, that is, a point-to-multipoint optical fibre infrastructure that is entirely passive and is represented by a single-rooted tree of optical fibres with splitters, combiners, filters, and possibly other passive optical components.

3.1.26 optical line termination (OLT) [ITU-T G.987]: A network element in an ODN-based optical access network that terminates the root of at least one ODN and provides an OAN SNI.

3.1.27 optical network terminal (ONT) [ITU-T G.989]: Historically used to denote an ONU supporting a single subscriber.

3.1.28 optical network unit (ONU) [ITU-T G.989]: A network element in an ODN-based optical access network that terminates a leaf of the ODN and provides an OAN UNI.

3.1.29 optical path penalty (OPP) [ITU-T G.989]: The apparent degradation of receiver sensitivity due to impairments from fibre transmission and apparent increase in ODN loss due to Raman depletion. The optical path penalty accounts for the effects of reflections, intersymbol interference, mode partition noise, fibre dispersion, and fibre non-linearities.

3.1.30 optical return loss (ORL) [ITU-T G.989]: The total reflection at the source reference point of the optical signal propagation path, measured as a ratio of the transmitted optical power to the reflected optical power.

3.1.31 optical trunk line (OTL) [ITU-T G.987]: A passive point-to-point segment of a composite ODN.

3.1.32 Out-of-band power spectral density (OOB-PSD) [ITU-T G.987.2]: The optical power spectral density outside the operating wavelength band measured at the appropriate reference point (S/R for downstream direction, R/S for upstream direction).

NOTE – Measurements are averaged over the time periods when the transmitter is enabled, or when the transmitter is not enabled but the allocated transient time has not yet elapsed, and these are expressed as the total integrated power within a sliding spectral window of known width.

3.1.33 passive optical network (PON) system [ITU-T G.987]: A combination of network elements in an ODN-based optical access network that includes an OLT and multiple ONUs and implements a particular coordinated suite of physical medium dependent layer, transmission convergence layer, and management protocols.

3.1.34 physical layer OAM (PLOAM) [ITU-T G.989]: An operation and management channel between the OLT and the ONUs that is close to real time and is based on a fixed set of messages.

3.1.35 quiet window [ITU-T G.989]: A time interval during which the OLT suppresses all bandwidth allocations to in-service ONUs in order to avoid collisions between their upstream transmissions and the transmissions from ONUs whose burst arrival time is uncertain. The OLT opens a quiet window to allow new ONUs to join the PON and to perform ranging of specific ONUs.

3.1.36 ranging grant [ITU-T G.989]: An allocation structure that is addressed to the default Alloc-ID of the ONU and has the PLOAMu flag set. A ranging grant does not specify a data allocation and has the GrantSize of zero.

3.1.37 reflectance [ITU-T G.989]: The reflection from any single discrete reflection point in the optical signal propagation path, which is defined to be the ratio of the reflected optical power present at a point, to the optical power incident to that point.

3.1.38 requisite delay [ITU-T G.989]: A general term denoting the total extra delay the OLT may require an ONU to apply to the upstream transmission beyond the ONU's regular response time. The purpose of requisite delay is to compensate for variation of propagation and processing delays of individual ONUs, and to avoid or reduce the probability of collisions between upstream transmissions.

Exhibit 1010
IPR2024-00899, USPN 9,806,892
14 of 290

3.1.39 round-trip propagation delay [ITU-T G.989]: The total amount of time it takes an optical signal to travel from the OLT transmitter to the ONU receiver and from the ONU transmitter to the OLT receiver.

3.1.40 round-trip time [ITU-T G.989]: The time interval, as observed by the OLT, between the start of a downstream PHY frame carrying a certain bandwidth map and the start of an upstream PHY burst specified by that bandwidth map.

3.1.41 service adapter [ITU-T G.989]: A functional entity responsible for encapsulating/de-encapsulating of the SDUs belonging to the specific service type to/from the XGEM frames.

3.1.42 service node (SN) [ITU-T G.902]: A network element that provides access to various switched and/or permanent telecommunication services.

3.1.43 service node interface (SNI) [ITU-T G.902]: An interface which provides access to a service node.

3.1.44 side mode suppression ratio (SMSR) [ITU-T G.989]: The ratio of the power of the largest peak of the transmitter spectrum to that of the second largest peak. The second largest peak may be next to the main peak, or far removed from it. Within this definition, spectral peaks that are separated from the largest peak by the clock frequency are not considered to be side modes.

3.1.45 tolerance to reflected optical power [ITU-T G.989]: A transmitter parameter that characterizes the maximum admissible ratio of the average reflected optical transmit power incident at the transmitter to the average optical transmit power.

3.1.46 traffic-monitoring DBA (TM-DBA) [ITU-T G.989]: A method of dynamic bandwidth assignment that infers the dynamic activity status of the traffic-bearing entities within ONUs based on observation of idle XGEM frame transmissions during upstream bursts.

3.1.47 transmission container (**T-CONT)** [ITU-T G.989]: A traffic-bearing object within an ONU that represents a group of logical connections, is managed via the ONU management and control channel (OMCC), and, through its TC layer Alloc-ID, is treated as a single entity for the purpose of upstream bandwidth assignment on the PON.

3.1.48 transmitter disable transient time [ITU-T G.989]: For a burst-mode transmitter, the allocated transient time on de-assertion of the TxEnable signal, measured in bit periods with respect to the transmitter nominal line rate.

3.1.49 transmitter enable transient time [ITU-T G.989]: For a burst-mode transmitter, the allocated transient time on assertion of the TxEnable signal, measured in bit periods with respect to the transmitter nominal line rate.

3.1.50 user-network interface (UNI) [b-ITU-T I.112]: The interface between the terminal equipment and a network termination at which interface the access protocols apply.

3.1.51 1:1 VLAN [b-BBF TR-101]: A VLAN forwarding paradigm involving a one-to-one mapping between user port and VLAN. The uniqueness of the mapping is maintained in the Access Node and across the Aggregation Network.

3.1.52 N:1 VLAN [b-BBF TR-101]: A VLAN forwarding paradigm involving many-to-one mapping between user ports and VLAN. The user ports may be located in the same or different Access Nodes.

3.2 Terms defined in this Recommendation

This Recommendation defines the following terms:

3.2.1 10-gigabit-capable passive optical network (XG-PON): A passive optical network **(**PON) system supporting nominal line rate of 10 Gbit/s in the downstream direction and 2.5 Gbit/s in the

Exhibit 1010
IPR2024-00899, USPN 9,806,892
15 of 290

upstream direction, and implementing the suite of protocols specified in the ITU-T G.987 series of Recommendations.

NOTE – Both a 10/2.5G and 10/10G definition was originally envisioned, but only the 10/2.5G was defined, XG-PON is the realization of NG-PON1. The 10/10G option is defined under the XGS-PON recommendations.

3.2.2 attenuation: See **optical path loss**.

3.2.3 coexistence element: A bidirectional functional element used to connect PON systems defined in different Recommendation series to the same ODN.

3.2.4 consecutive identical digit (CID) immunity: The longest continuous sequence of identical bits that can be present in a digital signal without causing degradation such that the system specifications are no longer met.

3.2.5 differential fibre distance: The absolute difference between the fibre distances of any two given paths between the R/S and S/R reference points in the same optical distribution network (ODN).

3.2.6 differential optical path loss: The absolute difference between the optical losses, expressed in decibel units, of any two given paths between the R/S and S/R reference points in the same optical distribution network (ODN).

3.2.7 dual parenting: A passive optical network protection configuration where optical network units (ONUs) are connected to two optical line terminals (OLTs) hosted in different OLT chassis.

NOTE – Typically the OLT chassis in dual parenting are geographically remote from each other.

3.2.8 fibre distance: The overall length of fibre (and, if applicable, equivalent fibre runs representing delay-inducing components) between the R/S and S/R reference points.

3.2.9 line code: In the XGS-PON context, a code which transforms a binary digital signal into an amplitude- and time-discrete waveform for transmission over a physical channel.

3.2.10 mask of transmitter eye diagram: A general method of transmitter pulse shape characterization that allows the combined specification of rise time, fall time, pulse overshoot/undershoot, ringing and jitter to ensure satisfactory operation with a compliant receiver. Transmitter mask compliance is required at the appropriate reference point (S/R for downstream, R/S for upstream).

3.2.11 mean launch optical power: An optical transmitter characteristic expressing the average optical power of an optical signal transmitted into the fibre and carrying a given digital sequence.

NOTE – When specified as a range, the minimum mean launch optical power provides the power level that the transmitter should guarantee at all times, and the maximum mean launch optical power provides the power level that the transmitter should never exceed. When applied to burst mode transmission, the term pertains to the time interval during which the transmitter is fully active, and excludes possible starting and ending transient behaviour.

3.2.12 ODN fibre distance class: A categorization of an optical distribution network (ODN) based on the predefined values of minimum and maximum fibre distance between the S/R and any of R/S reference points.

3.2.13 ODN optical path loss class (ODN Class): A categorization of an optical distribution network (ODN) based on the predefined values of minimum and maximum optical path loss over all possible paths between the S/R and any of the R/S reference points and over all possible operating wavelengths of a specific passive optical network (PON) system.

3.2.14 optical modulation amplitude (OMA): The absolute difference between the optical power of a logic one level and the optical power of a logic zero level. See Appendix I for more details on OMA.

Exhibit 1010
IPR2024-00899, USPN 9,806,892
16 of 290

3.2.15 optical path loss: The reduction in the optical power of light having traversed the optical distribution network (ODN) expressed as a ratio in decibel units.

NOTE – This loss may be caused by the fibre, connectors, splices, splitters, wavelength couplers, attenuators, and other passive optical components.

3.2.16 overload: A receiver parameter equal to the maximum average received optical power that produces the specified bit error ratio (BER) reference level, referring to the optical power at the appropriate reference point (S/R for upstream direction, R/S for downstream direction) measured with the worst case signal, but without the optical path impairments.

3.2.17 profile: A collection of parameters describing a particular object. Within the context of the XGS-PON TC layer, profile can pertain to an upstream burst in XGS-PON system.

3.2.18 ranging: A procedure of measuring the round-trip delay between the optical line terminal (OLT) and any of its subtending optical network units (ONUs) with the objective to determine and assign the appropriate equalization delay, which is necessary to align the ONU's upstream transmissions on a common OLT based upstream frame reference. Ranging is performed during ONU activation and may be performed while the ONU is in service.

3.2.19 RF video overlay: A method for video transmission in the downstream direction in a wavelength band between 1550nm and 1560nm according to [ITU-T J.185] and [ITU-T J.186].

3.2.20 round-trip delay: A sum of round-trip propagation delay, optical network unit (ONU) response time, and any ONU requisite delay.

3.2.21 sensitivity: A receiver parameter equal to the minimum average received optical power that produces the specified bit error ratio (BER) reference level, referring to the optical power at the appropriate reference point (S/R for upstream direction, R/S for downstream direction) measured with the worst case signal, but without the optical path impairments.

3.2.22 serial number grant: A type of allocation structure, addressed to a broadcast Alloc-ID and having the PLOAMu flag set that invites the optical network units (ONUs) in Serial Number state to transmit a Serial_Number_ONU PLOAM message in band.

NOTE – A serial number grant does not specify a data allocation.

3.2.23 spectral width: The full width of the largest spectral peak, measured 20 dB down from the maximum amplitude of the peak.

3.2.24 status reporting DBA (SR-DBA): A method of dynamic bandwidth assignment that infers the dynamic activity status of the traffic-bearing entities within optical network units (ONUs) based on explicit buffer occupancy reports communicated over the embedded operation, administration and maintenance (OAM) channel.

3.2.25 XGEM port: An abstraction in the XGS TC service adaptation sublayer representing a logical connection associated with a specific client packet flow.

3.2.26 XGS-PON transmission convergence (XGS TC) layer: A protocol layer of the XGS-PON protocol suite that is positioned between the physical media dependent (PMD) layer and the XGS-PON clients. The XGS TC layer is composed of the XGS TC service adaptation sublayer, the XGS TC framing sublayer, and the XGS TC PHY adaptation sublayer.

3.2.27 XGS-PON: A passive optical network (PON) system that operates at a nominal line rate of 10 Gbit/s downstream and upstream.

3.2.28 XG-PON1: A deprecated name for the XG-PON system that operates at a nominal line rate of 10 Gbit/s downstream and 2.5 Gbit/s upstream.

3.2.29 XG-PON2: A deprecated name for the XG-PON system that was proposed to operate at a nominal line rate of 10 Gbit/s downstream and 10 Gbit/s upstream.

Exhibit 1010
IPR2024-00899, USPN 9,806,892
17 of 290

3.2.30 XGS TC framing sublayer: A sublayer of the XGS-PON transmission convergence layer that supports the functions of frame/burst encapsulation and delineation, embedded operation, administration and maintenance (OAM) processing, and Alloc-ID filtering.

3.2.31 XGS TC PHY adaptation sublayer: A sublayer of the XGS-PON transmission convergence layer that supports the functions of physical synchronization and delineation, forward error correction (FEC), and scrambling.

3.2.32 XGS TC service adaptation sublayer: A sublayer of the XGS-PON transmission convergence layer that supports the functions of SDU (user data and OMCI traffic) fragmentation and reassembly, XGEM encapsulation, XGEM frame delineation, and XGEM Port-ID filtering.

4 Abbreviations and acronyms

This Recommendation uses the following abbreviations and acronyms:

1PPS	One Pulse Per Second
ACK	Acknowledgment
AES	Advanced Encryption Standard
AF	Adaptation Function
AIS	Alarm Indication Signal
Alloc-ID	Allocation Identifier
AN	Access Network
ANI	Access Node Interface
AO	Allocation Overhead
APC	Angled Physical Contact
ASCII	American Standard Code for Information Interchange
AVC	Attribute Value Change
AVP	Average Power
BBU	Baseband Unit
BCH	Bose-Chaudhuri-Hocquenghem (code)
BE	Best Effort (service category)
BER	Bit Error Ratio
BIP	Bit-Interleaved Parity
BITS	Building Integrated Timing Source
BN	Branching Node
B-PON	Broadband Passive Optical Network (ITU-T G.983 series)
BufOcc	Buffer Occupancy
BWmap	Bandwidth Map
CBU	Cell-site Backhauling Unit
CD	Chromatic Dispersion
CDR	Clock and Data Recovery
CE	Coexistence Element

Exhibit 1010
IPR2024-00899, USPN 9,806,892
18 of 290

CEM	Coexistence Element/Multiplexer
CEx	Coexistence Element Type x (x = 1, 2, etc.)
CID	Consecutive Identical Digits
CIR	Committed Information Rate
Clob	Count of the loss of burst events
CMAC	Cipher-based Message Authentication Code
CO	Central Office
CP	Channel Pair
CPE	Customer Premises Equipment
CPI	Channel Partition Index
CPRI	Common Public Radio Interface
CRC	Cyclic Redundancy Check
CT	Channel Termination
CTP	Connection Termination Point
CTR	Counter (block cipher mode)
DA	Destination Address
DBA	Dynamic Bandwidth Assignment
DBRu	Dynamic Bandwidth Report, upstream
DC	Direct Current
DCD	Duty-Cycle Distortion
DD	Differential Distance
DF	Disable Failure
DG	Dying Gasp
DJ	Deterministic Jitter
DLC	Digital Loop Carrier
DOW	Drift Of Window
DPU	Distribution Point Unit
DS	Downstream (transmission direction)
DSLAM	Digital Subscriber Line Access Multiplexer
DWLCH ID	Downstream Wavelength Channel Identifier
ECB	Electronic Code Book (block cipher mode)
EDFA	Erbium-Doped Fibre Amplifier
E-LAN	Ethernet LAN service
E-Line	Ethernet Line service
E-Tree	Ethernet Tree service
EMS	Element Management System
EPON	Ethernet Passive Optical Network

Exhibit 1010
IPR2024-00899, USPN 9,806,892
19 of 290

EWMA	Exponentially Weighted Moving Average
eNode B	evolved Node B
EqD	Equalization Delay
ER	Extinction Ratio
ESMC	Ethernet Synchronization Messaging Channel
EVC	Ethernet Virtual Connection
FCAPS	Fault, Configuration, Accounting, Performance, Security
FCS	Frame Check Sequence
FEC	Forward Error Correction
FFS	For Further Study
FS	Framing Sublayer
FTTdp	Fibre to the Distribution Point
FTTx	Fibre to the x (B – building, business; H – home; C – cabinet, curb, O – office)
FWI	Forced Wake-up Indication
G-PON	Gigabit-capable Passive Optical Network (ITU-T G.984 series)
GEM	G-PON Encapsulation Method
HEC	Hybrid Error Correction
HLend	Header Length, downstream
HPNA	Home Phoneline Networking Alliance
ICTP	Inter-Channel-Termination Protocol
ID	Identifier
IFC	Intra-Frame Counter
IK	Integrity Key
ILODS	Intermittent Loss of Downstream Synchronization (ONU state)
Ind	Indication (format field)
IPTV	Internet Protocol Television
KEK	Key Encryption Key
LA	Limiting Amplifier
LF	Last Fragment (format flag)
LOB	Loss of Burst
LODS	Loss of Downstream Synchronization
LOF	Loss of Frame
LOMC	Loss of Management Channel
LOOC	Loss of OMCI channel
LOPC	Loss of PLOAM Channel
LOS	Loss of Signal
LSB	Least Significant Bit

Exhibit 1010
IPR2024-00899, USPN 9,806,892
20 of 290

LSI	Local Sleep Indication
LTE	Long Term Evolution
LWI	Local Wake-up Indication
MAC	Media Access Control
MDU	Management Data Unit
MDU/SFU	Multi-Dwelling Unit/Single-Family Unit
MEF	Metro Ethernet Forum
MIB	Management Information Base
MIC	Message Integrity Check
MLM	Multi-Longitudinal Mode (laser type)
MoCA	Multimedia over Coax Alliance
MPLS	Multi-Protocol Label Switching
MSB	Most Significant Bit
MSK	Master Session Key
MTU	Multi-Tenant Unit
MUX	Multiplexer
NA	Non-Assured (service category)
NACK	Negative Acknowledgment
NAT	Network Address Translation
NG-PON1	Next Generation Passive Optical Network 1 (ITU-T G.987 series)
NG-PON2	Next Generation Passive Optical Network 2 (ITU-T G.989 series)
NGN	Next Generation Network
NIST	National Institute of Standards and Technology
NRZ	Non-Return to Zero
NT	Network Termination
NTP	Network Time Protocol
OAM	Operation, Administration and Maintenance
OAN	Optical Access Network
OC	Operation Control
OCS	Operation Control Structure
ODF	Optical Distribution Frame
ODN	Optical Distribution Network
ODN-ID	Optical Distribution Network Identifier
ODS	Optical Distribution Segment
OLT	Optical Line Terminal
OMA	Optical Modulation Amplitude
OMCC	ONU Management and Control Channel

Exhibit 1010
IPR2024-00899, USPN 9,806,892
21 of 290

OMCI	ONU Management and Control Interface
OMCI_IK	OMCI Integrity Key
ONT	Optical Network Terminal
ONU	Optical Network Unit
ONU-ID	Optical Network Unit Identifier
OPEX	Operational Expenditure
OPL	Optical Path Loss
OPP	Optical Path Penalty
ORL	Optical Return Loss
OSS	Operations Support System
OSSP	Organization Specific Slow Protocol
OTDR	Optical Time Domain Reflectometer
OTL	Optical Trunk Line
OTN	Optical Transport Network
OTUk	Optical channel Transport Unit k
PDU	Protocol Data Unit
PHY	Physical interface
PIR	Peak Information Rate
PIT	PON-ID Type
PLI	Payload Length Indication
PLOAM	Physical Layer Operations, Administration and Maintenance
PLOAMd	PLOAM, downstream
PLOAMu	PLOAM, upstream
PLOAM_IK	PLOAM Integrity Key
PM	Performance Monitoring
PMA	Physical Medium Attachment
PMD	Physical Medium Dependent
PON	Passive Optical Network
PPPoE	Point-to-Point Protocol over Ethernet
POTS	Plain Old Telephony Service
PRC	Primary Reference Clock
PSBd	Physical Synchronization Block, downstream
PSBu	Physical Synchronization Block, upstream
PSD	Power Spectral Density
PSK	Pre-shared Secret Key
PSync	Physical Synchronization sequence
PTP	Precision Time Protocol
QL	Quality Level

Exhibit 1010
IPR2024-00899, USPN 9,806,892
22 of 290

QoS	Quality of Service
RE	Reach Extender
RF	Radio Frequency
RJ	Random Jitter
RNC	Radio Network Controller
RNG	Ranging
RRT	Round-trip Response Time
RRU	Remote Radio Unit
RS	Reed-Solomon (code)
RSSI	Received Signal Strength Indication
R/S	Receive/Send reference point at the interface of the ONU to the ODN
R'/S'	Reach extender interface to optical trunk line
RTD	Round Trip Delay
RTT	Round Trip Time
Rx	Receiver
SA	Sleep Allow (PLOAM message type)
SA	Source Address
SBU	Small Business Unit (ONU type)
SCTE	Society of Cable and Telecommunication Engineers
SDH	Synchronous Digital Hierarchy
SDU	Service Data Unit
SeqNo	Sequence Number
SFC	Superframe Counter
SFD	Start Frame Delimiter
SIP	Session Initiation Protocol
SK	Session Key
SLM	Single Longitudinal Mode (laser type)
SMA	Secure Mutual Association
SMF	Single Mode Fibre
SMSR	Side Mode Suppression Ratio
SN	Serial Number
SN	Service Node
SNI	Service Node Interface
SNMP	Simple Network Management Protocol
SONET	Synchronous Optical Network
S/R	Send/Receive reference point at the OLT side
S'/R'	Reach extender interface to optical distribution network

Exhibit 1010
IPR2024-00899, USPN 9,806,892
23 of 290

SR	Status Reporting (DBA method)
SR	Sleep Request (PLOAM message type)
SR-DBA	Status Reporting DBA
SSM	Synchronization Status Message
STM	Synchronous Transport Module
SUF	Start-Up Failure
SyncE	Synchronous Ethernet
TBD	To Be Defined
T-CONT	Transmission Container
TC	Transmission Convergence
TCP/IP	Transmission Control Protocol/Internet Protocol
Td	delimiter Time
TDM	Time Division Multiplexing
TDMA	Time Division Multiple Access
Tg	guard Time
TIA	Transimpedence Amplifier
TIW	Transmission Interference Warning
TM	Traffic Monitoring (DBA method)
TM-DBA	Traffic-Monitoring DBA
ToD	Time of Day
TOL	Transmit Optical Level
TOx	Timeout (x = Z, 1, 2, 3, 4, 5)
Tp	preamble Time
Tplo	physical layer overhead Time
Tu	Timing uncertainty
TV	Television
TWDM	Time and Wavelength Division Multiplexing
Tx	Transmitter
UDP	User Datagram Protocol
UI	Unit Interval
UNI	User-Network Interface
UPC	Ultra Physical Contact
US	Upstream (transmission direction)
UWLCH ID	Upstream Wavelength Channel Identifier
VBES	VLAN-based Business Ethernet Services
VDSL	Very high-speed Digital Subscriber Line
VLAN	Virtual Local Area Network

Exhibit 1010
IPR2024-00899, USPN 9,806,892
24 of 290

VOA	Variable Optical Attenuator
VoD	Video on Demand
VoIP	Voice over Internet Protocol
VPN	Virtual Private Network
VSSN	Vendor-Specific Serial Number
VTU-O	Very high speed digital subscriber line Transceiver Unit, Operator end
WBF	Wavelength Blocking Filter
WDM	Wavelength Division Multiplexing
XG-PON	10-Gigabit Passive Optical Network (ITU-T G.987 series)
XGEM	10-Gigabit-capable PON Encapsulation Method
XGS TC	XGS-PON Transmission Convergence
XGTC	XG-PON Transmission Convergence (protocol layer)
XML	Extensible Markup Language
XOR	Exclusive OR
X/S	Crosstalk-to-Signal Ratio

5 Conventions

5.1 Optical access concepts

This Recommendation reuses the optical access network terminology and definitions system adopted by [ITU-T G.987]. An example of an access network architecture satisfying the definition system is shown in Figure 5-1.

Exhibit 1010
IPR2024-00899, USPN 9,806,892
25 of 290

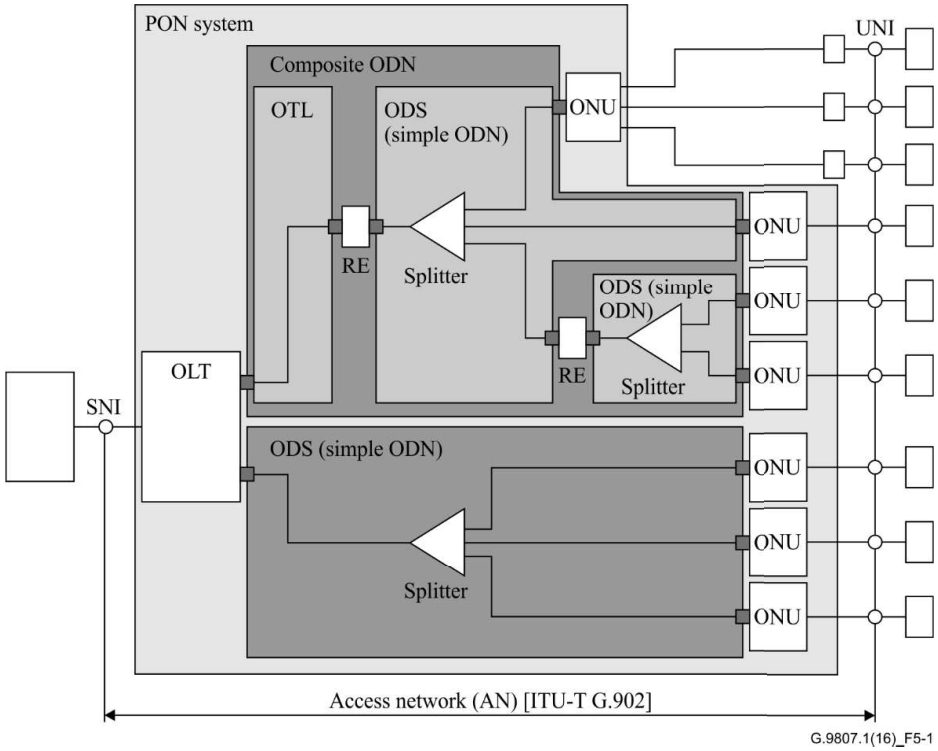

Figure 5-1 – Reference access network architecture

5.2 Multi-wavelength PON system reference points

Not applicable to XGS-PON.

5.3 Optical power and loss parameters

The relationships between optical power and loss parameters are captured in Figure 5-2.

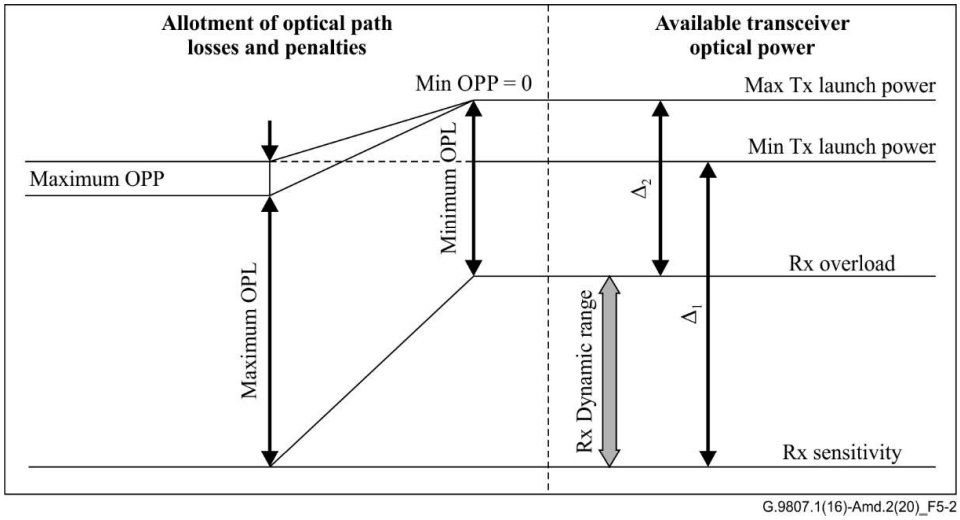

Figure 5-2 – Relationship between the optical power and loss parameters

Exhibit 1010
IPR2024-00899, USPN 9,806,892
26 of 290

Given an optical distribution network (ODN) characterized by the maximum and minimum optical path loss and the maximum optical path penalty, the optical link is balanced if and only if the following two constraints are met (assuming logarithmic representation of the parameters):

1) The difference between the minimum transmitter mean launch power and the receiver sensitivity is greater than or equal to the sum of the maximum optical path loss and the maximum optical path penalty.
2) The difference between maximum transmitter mean launch power and the receiver overload does not exceed the minimum optical path loss.

5.4 Dynamic range, sensitivity and overload

The concept of the dynamic range definition is illustrated in Figure 5-3. The receiver sensitivity and overload are generally understood, respectively, as the minimum and maximum average received optical power at which the bit error ratio (BER) at the receiver output remains at the specified reference level. The observed values of receiver sensitivity and overload may vary as the operating temperature and signal quality change, and the system ages. The signal quality characteristics that affect receiver sensitivity and overload may include the transmitter extinction ratio, parameters of the eye diagram and in-band crosstalk. In this Recommendation, receiver sensitivity and receiver overload are formally specified by their respective worst-case values, i.e., maximum sensitivity and minimum overload over the range of operating temperature and signal quality parameters, and under the end-of-life conditions.

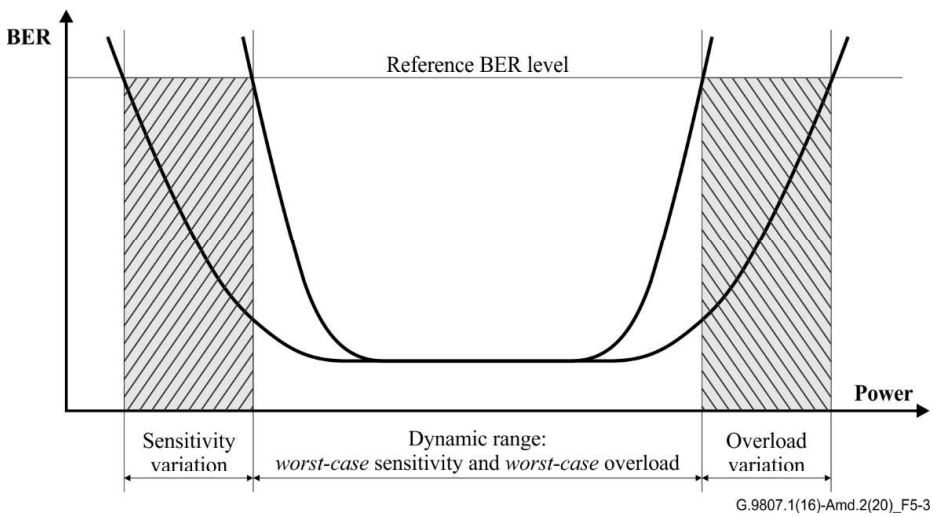

Figure 5-3 – Receiver output BER as a function of received optical power and the definition of dynamic range

5.5 Sensitivity and overload in the presence of FEC

To simplify XGS-PON optical component verification, this Recommendation, as [ITU-T G.987.2] prior to it, specifies the sensitivity and overload at the reference BER level, which corresponds to the receiver (Rx) output and the forward error correction (FEC) decoder input. It is assumed that the FEC algorithms specified, respectively, for continuous mode downstream and burst mode upstream transmission are sufficiently strong to achieve the BER level of 10^{-12} or better at the FEC decoder output. See [b-ITU-T G-Sup.39] for further discussion.

5.6 Reach and distance

Like the ITU-T G.987 series of Recommendations, this Recommendation addresses the linear extent parameters of XGS-PON using the single concept of fibre distance. An optical network unit (ONU)

Exhibit 1010
IPR2024-00899, USPN 9,806,892
27 of 290

is characterized by its fibre distance, and for each pair of ONUs on the same optical line terminal (OLT) PON interface, the differential fibre distance is the difference between the two individual fibre distances. Each specific PMD layer parameter set contains a provision to support a specific maximum fibre distance. The XGS-PON TC layer specification contains a provision to support specific ranges of maximum fibre distance and maximum differential fibre distance. These ranges can be configurable for a given system. One can expect that for each XGS-PON deployment, the configured TC layer maximum fibre distance will match the maximum fibre distance supported by the selected PMD layer parameter set. Fibre distance concepts are illustrated in Figure 5-4.

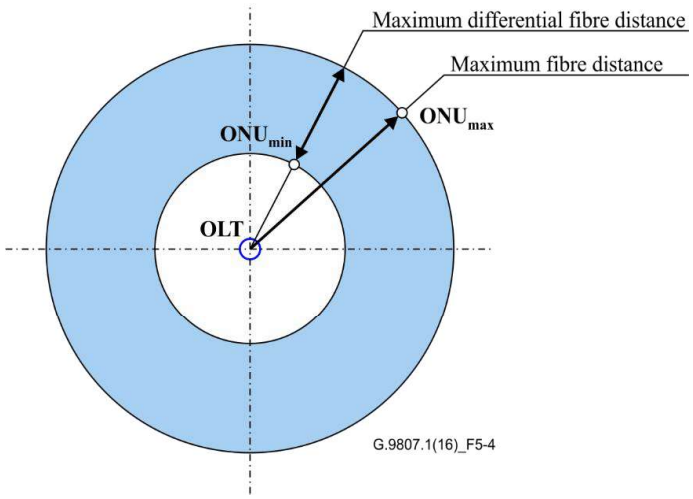

Figure 5-4 – Fibre distance concepts

5.7 Use of the term PON

Historically, the term PON was introduced to describe a point-to-multipoint fibre infrastructure composed of exclusively passive optical components. This strict-sense usage was soon naturally extended to include a fibre-in-the-loop communication system employing such an infrastructure and using time-division multiplexing (TDM) to share the available digital bandwidth among many subscribers (TDM PON). As new types of PON-based systems were introduced, leveraging various TDM transport mechanisms (e.g., B-PON, G-PON, EPON) or alternative multi-access methods (e.g., WDM-PON), it became common to use the word PON with appropriate qualification in reference to the specific architectural variations. While the term remained overloaded, referring in different contexts to a network, a system, architecture or technology, all the referenced entities shared a common attribute of containing, using or relying upon a fibre infrastructure with no active (electronic) components between the central office interface and the user equipment interface. More recently, introduction of active reach extenders within the optical distribution network as defined in [ITU-T G.984.6] created a paradoxical situation when an infrastructural component of a G-PON system may not be entirely passive, that is, nominally, no longer a PON. Thus, it became apparent that the excessive overloading of what was once meant to be a precise term may adversely impact the clarity of a technical presentation.

This current series of Recommendations deliberately restricts the usage of the term PON to the contexts where it denotes a system, that is, a combination of network elements including at least one OLT and multiple ONUs interconnected by an ODN that implements a particular coordinated suite of physical medium dependent layer, transmission convergence layer, and management protocols. It also strives to provide a consistent, unambiguous, and extensible definition system that allows supporting efficient communication on the subject.

Exhibit 1010
IPR2024-00899, USPN 9,806,892
28 of 290

5.8 Use of the term ODN

In the ITU-T G.983 B-PON and ITU-T G.984 G-PON series of Recommendations (prior to [ITU-T G.984.6]), the term optical distribution network (ODN) refers to a passive point-to-multipoint distribution means extending from the user-facing interface of the OLT to the network-facing interfaces of the ONUs. The introduction of active reach extenders and the concept of dual-homing call for a revision of the term's scope and usage, as the fibre-based distribution network extending between the OLT and ONU interfaces may be neither point-to-multipoint nor strictly passive.

This Recommendation follows the ITU-T G.987 series of Recommendations, endorsing a generalized usage of the term ODN to denote a point-to-multipoint fibre infrastructure, which is not required to be entirely passive. In the contexts where the internal structure of the ODN is not a concern, it is the ODN that interconnects the OLT and the ONUs to form a PON system. In the contexts where the internal structure of the ODN is relevant, two types of ODNs can be distinguished. A *simple* ODN is entirely passive and is represented by a single-rooted point-to-multipoint tree of optical fibres with splitters, combiners, filters and possibly other passive optical components. A *composite* ODN consists of two or more *segments* interconnected by active devices, each of the segments being either an optical trunk line segment or an optical distribution segment. A passive optical distribution segment is a simple ODN itself. The definition allows two ODNs with distinct roots to share a common subtree, thus supporting the notions of dual-homing and protection within the definition system.

5.9 Use of the terms ONU and ONT

Throughout this Recommendation, as in the earlier ITU-T G.987 series of Recommendations, the network element interfacing the end-user access facilities and the ODN is referred to as an ONU, or an optical network unit, irrespective of the number and type of user interfaces or the depth of fibre deployment. Historically, the term ONT, or optical network terminal/termination, has been used either interchangeably with ONU or with the particular semantics of "an ONU that is used for fibre to the home (FTTH) and includes the user port function" (see [ITU-T G.983.1]), or "a single-subscriber ONU" (see [ITU-T G.984.1] and other Recommendations of the ITU-T G.984 series). This Recommendation follows the latter approach in defining ONT. Note, however, that while this definition captures one established trade interpretation of the term, the concept itself is not used as a part of this Recommendation reference access architecture.

Outside of the scope of [ITU-T G.987] and this Recommendation, alternative interpretations may apply and, therefore, the reader is advised to clarify the exact meaning of the term in each specific context. In particular, in some external contexts, the term ONT may be used generically to refer to any device terminating a leaf of the ODN.

5.10 Use of the terms T-CONT and Alloc-ID

A transmission container (T-CONT) is an ONU management and control interface (OMCI) managed entity representing a group of logical connections that appear as a single entity for the purpose of upstream bandwidth assignment in a PON system.

For a given ONU, the number of supported T-CONTs is fixed. The ONU autonomously creates all the supported T-CONT instances during ONU activation or upon OMCI MIB reset. The OLT uses the ONU management and control channel (OMCC) to discover the number of T-CONT instances supported by a given ONU and to manage those instances.

The *Allocation identifier* (*Alloc-ID*) is a 14 bit number that the OLT assigns to an ONU to identify a traffic-bearing entity that is a recipient of upstream bandwidth allocations within that ONU. Such a traffic-bearing entity is usually represented by a T-CONT, but may also be represented by an internal non-managed structure.

Each ONU is assigned at least its default Alloc-ID and may be explicitly assigned additional Alloc-IDs per OLT's discretion.

Exhibit 1010
IPR2024-00899, USPN 9,806,892
29 of 290

To activate a T-CONT instance for carrying the upstream user traffic, the OLT has to map that T-CONT instance to an Alloc-ID which was previously assigned to the given ONU via the physical layer operations, administration and maintenance (PLOAM) messaging channel. Mapping of T-CONTs to Alloc-IDs is performed via the OMCC. The OMCC itself is mapped, in the upstream direction, to the default Alloc-ID. This mapping is fixed; it cannot be managed via the OMCI MIB and it should survive OMCI MIB reset.

Although in many cases there exists a one-to-one correspondence between T-CONTs and Alloc-IDs, it is the Alloc-ID, not a T-CONT, which is visible at the TC layer of the system.

5.11 Use of the terms bandwidth assignment and bandwidth allocation

The term "bandwidth assignment" refers to the distribution of the upstream PON capacity between the ONUs' traffic-bearing entities using certain isolation and fairness criteria. In static bandwidth assignment, the said criteria are based exclusively on the provisioned parameters of the traffic contracts, and the bandwidth is assigned on the timescale of the individual service provisioning. In dynamic bandwidth assignment, the activity status of the traffic-bearing entities is taken into consideration along with the parameters of the traffic contracts, and the bandwidth assignment is periodically refined.

The term "bandwidth allocation", on the other hand, denotes the process of granting individual transmission opportunities to the ONUs' traffic-bearing entities on the timescale of a single PHY frame. The process of bandwidth allocation uses the assigned bandwidth values as an input and produces the per-frame bandwidth maps as an output. It also accounts for PLOAM messaging and the upstream dynamic bandwidth report (DBRu) overhead requirements and the short-term disturbances associated with the creation of quiet windows for serial number acquisition and ranging purposes.

5.12 Use of the terms band and range

Not applicable to XGS-PON.

5.13 Transmitter enable control and associated transient times

Conceptually, TxEnable is a binary signal that controls a burst-mode ONU transmitter. The TxEnable signal must be asserted (active) for the ONU to transmit an assigned burst. The TxEnable signal is expected to be de-asserted (inactive) whenever no burst is assigned to the ONU. The Transmitter Enable transient time and Transmitter Disable transient time are the allocated time intervals which serve to accommodate any transient physical processes that may be associated, respectively, with assertion and de-assertion of the TxEnable signal. The maximum number of bits allocated for Transmitter Enable transient time and Transmitter Disable transient time are parameters of the ONU optical interface specification. Figure 5-5 shows the relationship between the level of the TxEnable signal (without loss of generality, active-high logic is assumed) and the associated transient times of the burst-mode transmitter. Within the scope of G.XGS-PON Recommendations, the definitions of the optical-power-related PMD parameters applicable to the burst-mode transmitters (mean launch optical power, extinction ratio) are referenced to the corresponding averaging intervals which are specified in terms of transmitter's enabled/disabled periods and the associated transient times.

Exhibit 1010
IPR2024-00899, USPN 9,806,892
30 of 290

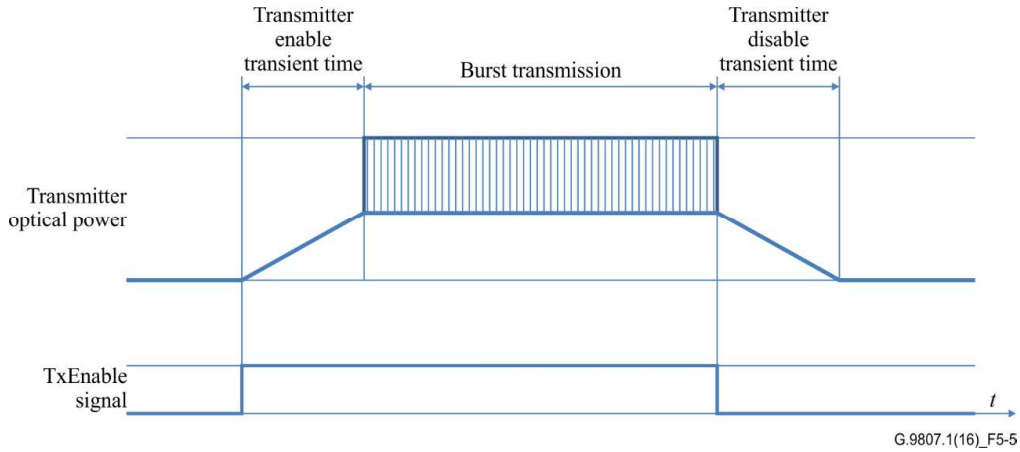

Figure 5-5 – The TxEnable signal and the associated transient times of a burst-mode transmitter

6 Overview of the XGS-PON Recommendation

This Recommendation consists of general requirements, physical media dependent (PMD) layer specifications and transmission convergence (TC) layer specifications. Unlike the typical ITU-T PON Recommendations, each of these aspects of XGS-PON has not been given a dedicated standalone Recommendation and, instead, they are captured herein within annexes.

Concerning the general requirements of XGS-PON, these are largely based on [ITU-T G.987.1] and are specified in Annex A. The major changes, in addition to the 10 Gbit/s symmetric line rate requirement, are; (a) the addition of the fibre to the distribution point (FTTdp) scenario, (b) the addition of the G.fast UNI defined in [ITU-T G.9701], (c) co-existence options with G-PON and XG-PON using wavelength overlay and/or time division multiple access (TDMA) methods, (d) extension of example Ethernet services to include MEF Carrier Ethernet 2.0, (e) mandatory support of Ethernet jumbo frames with XGS-PON ONUs and (f) the expansion of sleep mode support to include dozing, cyclic sleep and watchful sleep modes.

The PMD layer of XGS-PON is largely based on [ITU-T G.987.2] and is specified in Annex B, with the upstream 10 Gbit/s PMD parameters largely based on clause 75 of [IEEE 802.3]. Specifically, a key consideration in the PMD layer specifications is the reuse, where possible, of existing optical modules (e.g., 10GBASE-PR-U3 (ONU)) from IEEE 10G-EPON [IEEE 802.3] in this application to benefit from common technology.

The major changes to the PMD layer of XGS-PON relative to [ITU-T G.987.2], in addition to the 10 Gbit/s symmetric line rate requirement, are; (a) the addition of a wavelength option (optional wavelength set) using the G-PON wavelength bands, (b) the addition of G-PON classes for optical path loss in the case of the optional wavelength set and (c) increase of the upstream physical layer overhead length.

To aid the implementer, a description of key XGS-PON PMD parameters and the inter-relationship with the PR30 (see [IEEE 802.3]) specifications is provided in Appendix III. Optical modules (10GBASE-PR-D3 (OLT) and 10GBASE-PR-U3 (ONU)) from clause 75 of IEEE 10G-EPON [b-IEEE 802.3av], are intended to be used with the Basic wavelength set described in clause A.8.2.

The TC layer of XGS-PON is largely based on [ITU-T G.989.3] and is specified in Annex C. A key consideration for the XGS-PON TC layer specification is that TC chipset implementations complying with [ITU-T G.989.3] are able to be reused in XGS-PON by, in general terms, disabling the wavelength channel management and tuning functionality. Furthermore, support for XG-PON ONUs is also enabled in such a XGS-PON TC layer.

Exhibit 1010
IPR2024-00899, USPN 9,806,892
31 of 290

As a guide to the chipset implementers, a general overview of the relationship with the NG-PON2 TC layer specifications [ITU-T G.989.3] are described in Appendix II to aid in adapting these for XGS-PON use.

The ONU management and control interface (OMCI) specifications are described in [ITU-T G.988].

Exhibit 1010
IPR2024-00899, USPN 9,806,892
32 of 290

Annex A

General requirements of XGS-PON

(This annex forms an integral part of this Recommendation.)

This annex includes comprehensive general requirements of XGS-PON.

This annex addresses the general requirements of symmetric 10 Gigabit-capable passive optical network (XGS-PON) systems, in order to guide and motivate the physical layer and the transmission convergence layer specifications. The general requirements include examples of services, user network interfaces (UNIs) and service node interfaces (SNIs), as well as the principal deployment configurations that are requested by network operators. This Recommendation also includes the system and operational requirements to meet the needs of supporting various business, mobile and residential applications.

The general requirements of XGS-PON are largely based on [ITU-T G.987.1]. The structure and text from [ITU-T G.987.1] is largely retained to allow comparison. Some clauses that don't apply to XGS-PON are intentionally left blank. The major changes, in addition to the 10 Gbit/s symmetric line rate requirement, are; (a) the addition of the fibre to the distribution point (FTTdp) scenario, (b) the addition of the G.fast UNI defined in [ITU-T G.9701], (c) co-existence options with G-PON and XG-PON using wavelength overlay and/or TDMA methods, (d) extension of example Ethernet services to include MEF Carrier Ethernet 2.0, (e) mandatory support of Ethernet jumbo frames with XGS-PON ONUs and (f) the expansion of sleep mode support to include dozing, cyclic sleep and watchful sleep modes.

Clauses A.1 to A.4 are intentionally left blank.

A.5 Architecture of the optical access network

A.5.1 Network architecture

The optical section of a local access network system can be either active or passive and its architecture can be either point-to-point or point-to-multipoint. Figure A.5.1 shows the considered architectures, which can be fibre to the home (FTTH), fibre to the cell site (FTTCell), fibre to the building/curb (FTTB/C), fibre to the cabinet (FTTCab), fibre to the distribution point (FTTdp), etc. The optical distribution network (ODN) is common to all the architectures shown in Figure A.5.1; hence, the commonality of this system has the potential to generate large worldwide volumes.

Exhibit 1010
IPR2024-00899, USPN 9,806,892
33 of 290

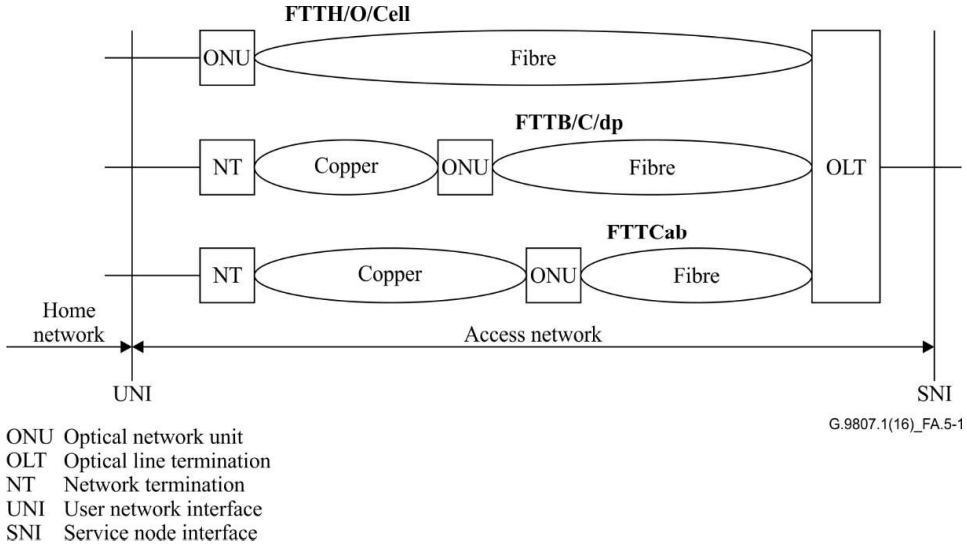

Figure A.5.1 – Network architecture

NOTE – An ONU supporting FTTH has been commonly referred to as ONT, (see main body of this Recommendation).

The differences among these FTTx options are mainly due to the different services supported and the different locations of the ONUs rather than the ODN itself, so they can be treated as one in this Recommendation. It must be noted that a single OLT optical interface might accommodate a combination of several scenarios described hereafter.

XGS-PON should extend the [ITU-T G.984.6] and [ITU-T G.987.4] reach extenders capability, to produce extra optical budget to achieve longer distances and/or additional passive split at the relevant line rate combinations.

A.5.1.1 FTTB scenario

The fibre to the building (FTTB) scenario is divided into two scenarios, one for multi-dwelling units (MDU) and the other for businesses or mixed environments, multi-tenant units (MTUs). Each scenario has the following service categories:

A.5.1.1.1 FTTB for MDU-served residential users

- Asymmetric broadband services (e.g., Internet protocol television (IPTV), digital broadcast services, video on demand (VoD), file download, etc.).
- Symmetric broadband services (e.g., content broadcast, e-mail, file exchange, distance learning, telemedicine, online-games, etc.).
- Plain old telephone service (POTS) – The access network must be able to provide, in a flexible way, narrow-band telephone services using either emulation (complete replication of a legacy service) or simulation (providing a service that is almost the same as the legacy service).

A.5.1.1.2 FTTB for MTU-served business users

- Symmetric broadband services (e.g., group software, content broadcast, e-mail, file exchange, etc.).
- POTS – The access network must be able to provide, in a flexible way, narrow-band telephone services using either emulation (complete replication of a legacy service) or simulation (providing a service that is almost the same as the legacy service).

Exhibit 1010
IPR2024-00899, USPN 9,806,892
34 of 290

– Private line – The access network must be able to provide, in a flexible way, private-line services at several rates.

A.5.1.2 FTTC and FTTCab scenario

For fibre to the curb (FTTC) and fibre to the cabinet (FTTCab) scenarios, the following service categories have been considered:

– Asymmetric broadband services (e.g., IPTV, digital broadcast services, VoD, file download, online-games, etc.).

– Symmetric broadband services (e.g., content broadcast, e-mail, file exchange, distance learning, telemedicine, etc.).

– POTS – The access network must be able to provide, in a flexible way, narrow-band telephone services using either emulation (complete replication of a legacy service) or simulation (providing a service that is almost the same as the legacy service).

– xDSL backhaul.

A.5.1.3 FTTH scenario

For fibre to the home (FTTH) scenario, the following service categories have been considered:

– Asymmetric broadband services (e.g., IPTV, digital broadcast services, VoD, file download, etc.).

– Symmetric broadband services (e.g., content broadcast, e-mail, file exchange, distance learning, telemedicine, online-games, etc.).

– POTS – The access network must be able to provide, in a flexible way, narrow-band telephone services using either emulation (complete replication of a legacy service) or simulation (providing a service that is almost the same as the legacy service).

A.5.1.4 FTTO scenario

Fibre to the office (FTTO) addresses business ONU dedicated to a small business customer. Within this scenario, the following service categories have been considered:

– Symmetric broadband services (e.g., group software, content broadcast, e-mail, file exchange, etc.).

– POTS – The access network must be able to provide, in a flexible way, narrow-band telephone services using either emulation (complete replication of a legacy service) or simulation (providing a service that is almost the same as the legacy service).

– Private line – The access network must be able to provide, in a flexible way, private line services at several rates.

A.5.1.5 FTTCell wireless scenario

For fibre to the cell-site (FTTCell) scenario, the ONU will be called a cell-site backhauling unit (CBU) and will have to offer connectivity to wireless base stations:

– symmetric TDM services (e.g., 2G cell site backhaul);

– symmetric/asymmetric packet-based broadband services (e.g., 3G/4G cell-site backhaul);

– hot spots.

A.5.1.6 FTTdp scenario

For fibre to the distribution point (FTTdp) scenario, the ONU will be called a distribution point unit (DPU) that in addition to the FTTB service categories and capabilities may support:

– reverse powering capability with power supplied through the copper drop from the end-user installation

Exhibit 1010
IPR2024-00899, USPN 9,806,892
35 of 290

– xDSL or G.fast copper drop UNI

FTTdp architectures involving DPU are described in [b-BBF TR-301].

Figure A.5.2 represents exemplary scenarios of XGS-PON applications.

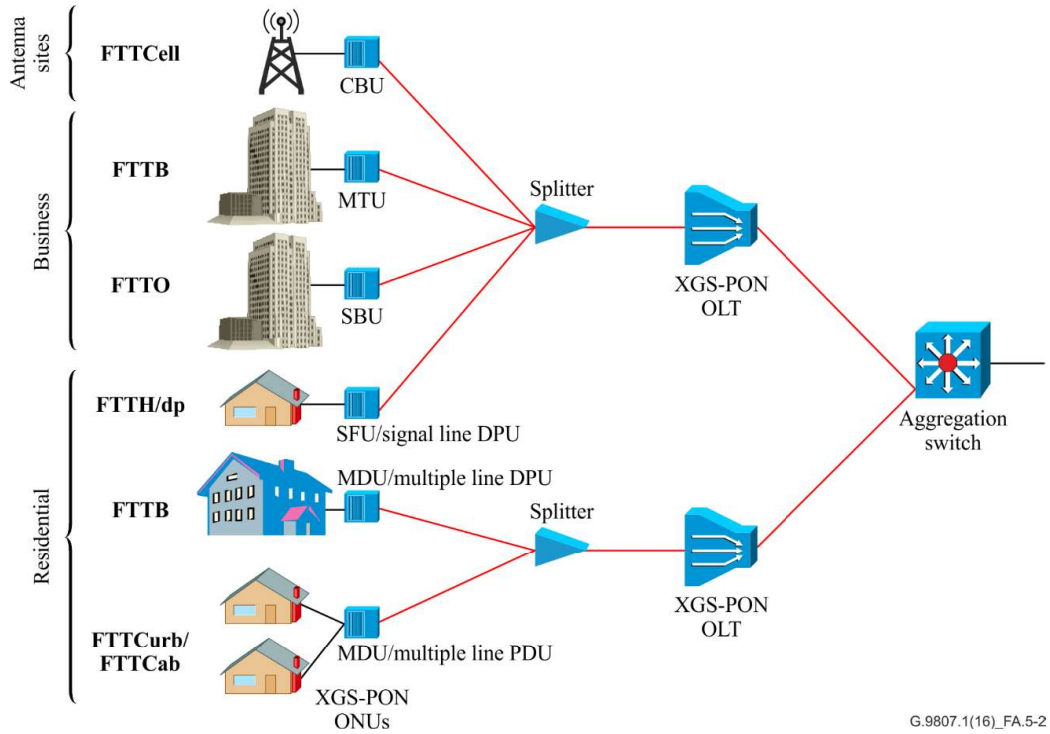

Figure A.5.2 – A summary of some XGS-PON scenarios

A.5.1.7 Environment conditions in outdoor scenarios

For supporting the wide range of scenarios and applications, optical parameters for the OLT and the ONU should be determined to allow an outdoor operation.

A.5.2 Reference configuration

A high level and simple reference configuration of XGS-PON is depicted in Figure A.5.3, which shows a very similar high level reference configuration as in the ITU-T G.983.x, ITU-T G.984.x and ITU-T G.987.x series of Recommendations.

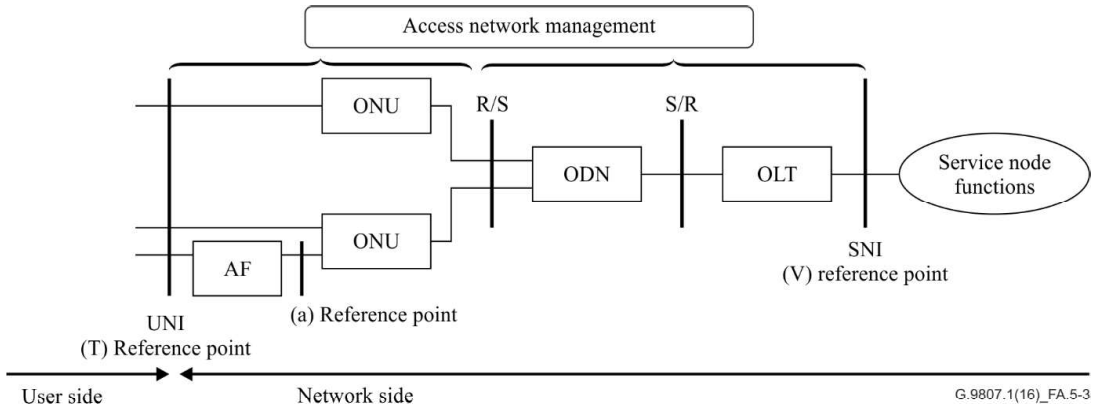

Figure A.5.3 – High-level reference configuration of XGS-PON

Exhibit 1010
IPR2024-00899, USPN 9,806,892
36 of 290

In addition to Figure A.5.3, when XGS-PON is deployed with a radio frequency (RF) video overlay service, the ODN can use a wave division multiplexing (WDM) device or an optical coupler/splitter to combine XGS-PON and RF video signals. The coupler/splitter can optionally be used to provide a split at the central office (CO). Such architectures are depicted in Figures A.5.4 and A.5.5.

Figure A.5.1 depicts the generic optical access network (OAN) reference architecture that applies to the XGS-PON. It includes an OLT, ONUs and an optical distribution network (ODN) between them. As shown in Figure A.5.4, a XGS-PON ODN can consist of a single passive optical distribution segment (ODS), or a group of passive ODSs interconnected with reach extenders (REs) [ITU-T G.987.4] according to the wavelength option adopted. RE extensions for the G-PON windows at 10 Gbit/s will have to be defined.

A.5.2.1 ODN architectures

There can be several types of ODN architectures to achieve coexistence scenarios and additional services such as video distribution services, based on basic wavelength set and optional wavelength set. These are described in clause A.6.

Figures A.5.4 to A.5.6 are reference diagrams of optical access network architectures, showing the corresponding coexistence options. The figures assume that wavelength blocking filters (WBF) are used when XGS-PON, XG-PON or G-PON and video are combined within the same ODN.

Note that these diagrams simply provide reference configurations of the ODN and WBF, and are not intended to limit future designs and implementations.

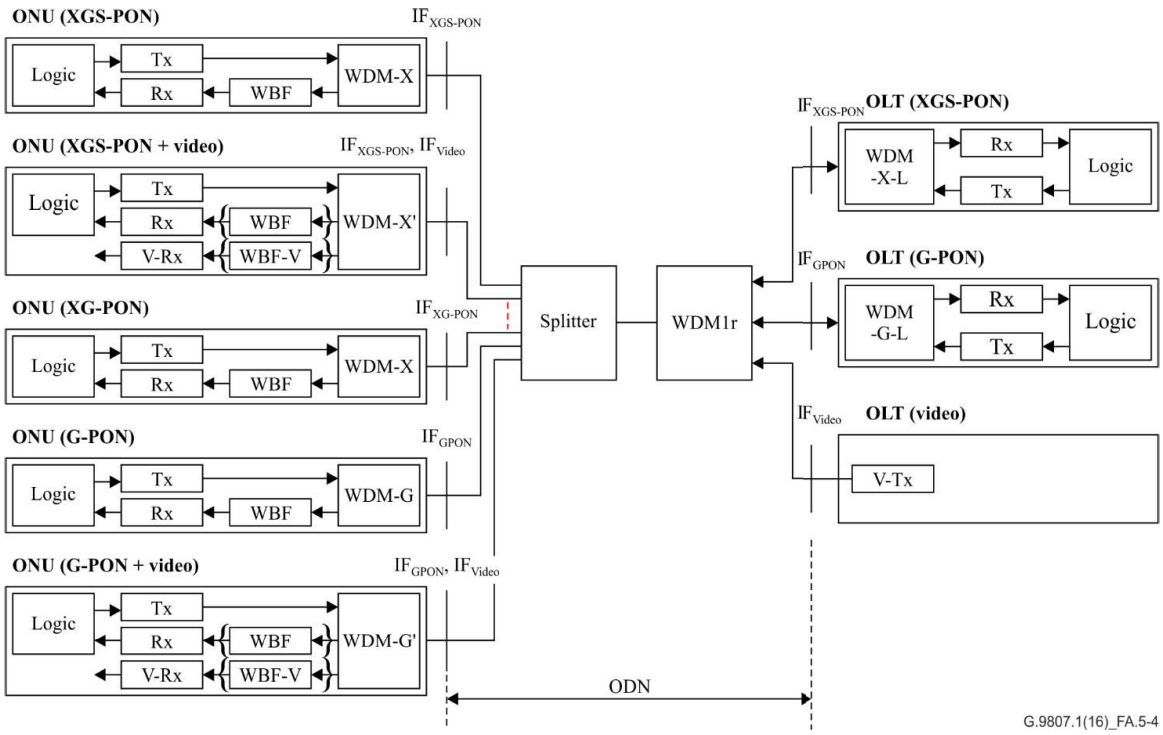

NOTE – XG-PON and XGS-PON ONUs are accommodated on the OLT XGS-PON port through a TDM/TDMA scheme.

Figure A.5.4 – Reference optical configuration for XGS-PON coexistence with G-PON through WDM1r with basic wavelength set for XGS-PON

Exhibit 1010
IPR2024-00899, USPN 9,806,892
37 of 290

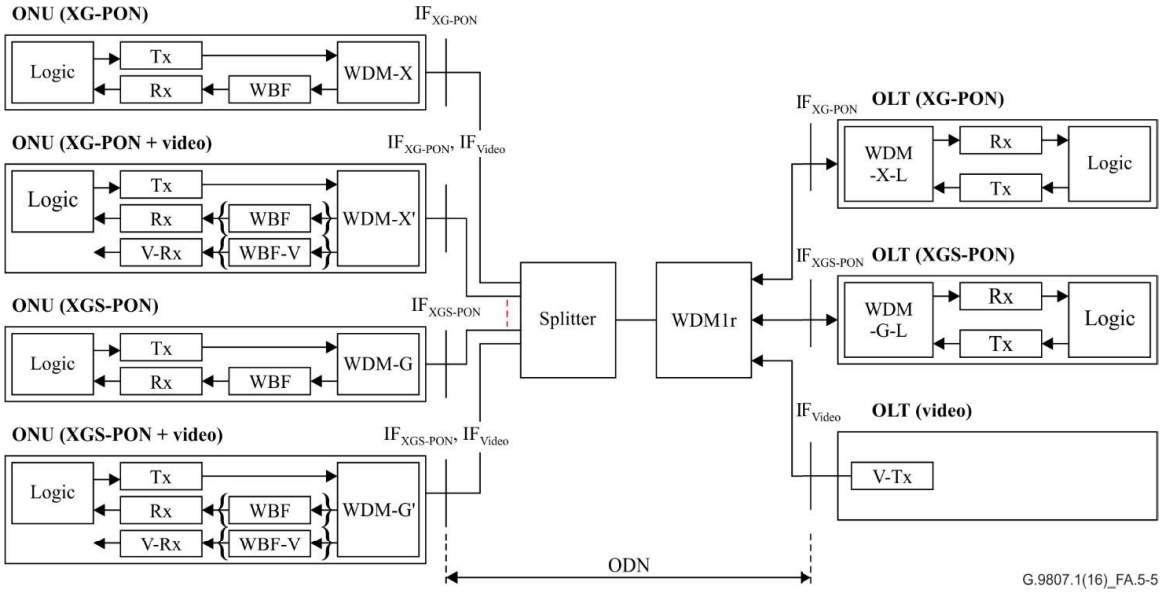

Figure A.5.5 – Reference optical configuration for XGS-PON coexistence with XG-PON through WDM1r with Optional wavelength set for XGS-PON

NOTE – In Figure A.5.5, WDM1r could be replaced with CEx or CEMx

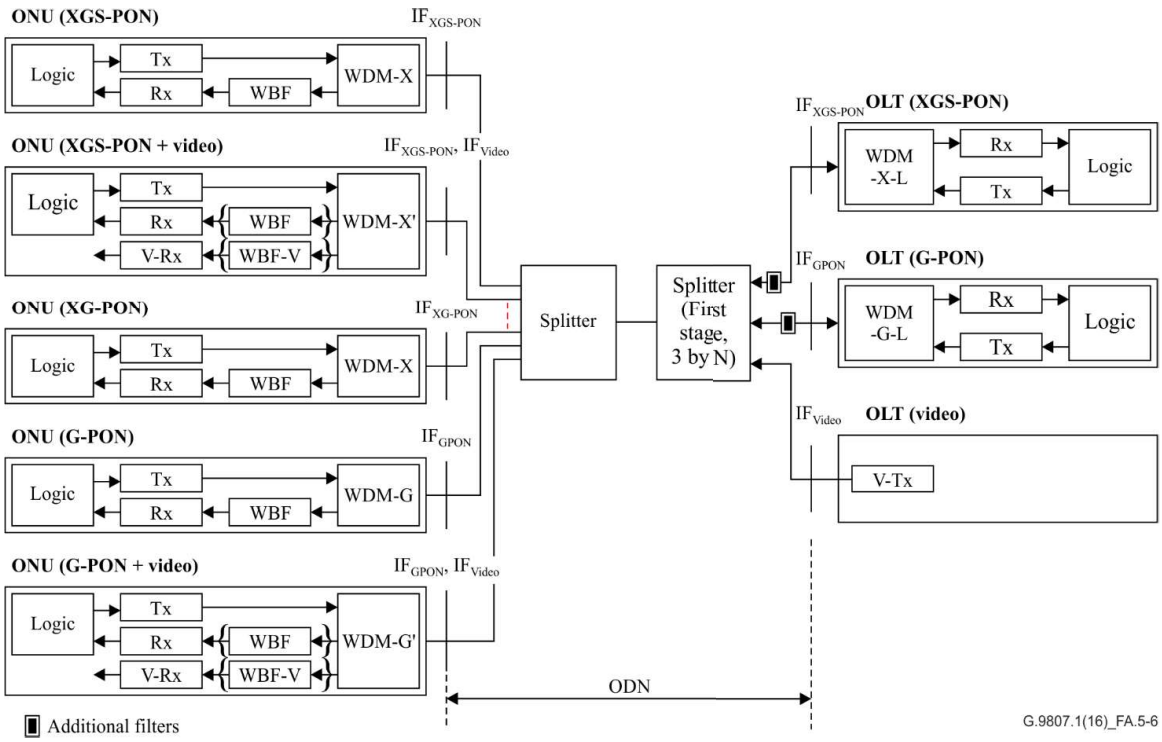

NOTE – XG-PON and XGS-PON ONUs are accommodated on the OLT XGS-PON port through a TDM/TDMA scheme.

Figure A.5.6 – Reference optical configuration for XGS-PON coexistence through splitter example of XGS-PON using Basic wavelength set

Exhibit 1010
IPR2024-00899, USPN 9,806,892
38 of 290

NOTE – In the case of when coexistence with XGS-PON based on a splitter rather than a WDM1r device is envisioned, strengthened filtering or additional filtering (as shown in Figure A.5.6 revised as above) should be used at the OLT side for implementation of the WDM-X-L and WDM-G-L to offer the required isolation. Those filters, when part of OLT implementation choices, are out of scope of this Recommendation.

Example coexistence scenarios for G-PON or XG-PON with XGS-PON are shown in Figures A.5.4, A.5.5 and A.5.6. Acronyms used in those figures are listed as follows:

Tx	Optical transmitter
Rx	Optical receiver
V-Tx	Video transmitter
V-Rx	Video receiver
WBF	Wavelength blocking filter for blocking interference signals to Rx.
WBF-V	Wavelength blocking filter for blocking interference signals to V-Rx.
WDM-X	WDM filter in the XG-PON ONU to combine/isolate the wavelengths of the XG-PON upstream and downstream.
WDM-X'	WDM filter in the XG-PON ONU to combine/isolate the wavelengths of the XG-PON upstream and downstream and isolate the video signal(s).
WDM-G	WDM filter in the G-PON ONU to combine/isolate the wavelengths of the G-PON upstream and downstream.
WDM-G'	WDM filter in the G-PON ONU to combine/isolate the wavelengths of the G-PON upstream and downstream and isolate the video signal(s).
WDM-X-L	WDM filter in the XG-PON OLT to combine/isolate the wavelengths of the XG-PON upstream and downstream.
WDM-G-L	WDM filter in the G-PON OLT to combine/isolate the wavelengths of the G-PON upstream and downstream.
WDM1r	WDM filter that may be located in the central office to combine/isolate the wavelengths of the XG-PON and the G-PON signals and which occasionally combines the video signals.

A.5.2.2 Legacy operating wavelength for G-PON and XG-PON

The wavelength range of the XG-PON downstream signal on a single-fibre system is from 1 575-1 580 nm (1 575-1 581 nm for outdoor application), and the range of the upstream signal for XG-PON is from 1 260-1 280 nm. See clause 5.2.2 of [ITU-T G.987.1] for details on wavelength band allocations and how these enable co-existence with G-PON.

A.5.2.3 Operating wavelength options for XGS-PON

XGS-PON systems come with two operating wavelength options:

Basic wavelength set: consists of XG-PON wavelength reuse, in which case the system has to accommodate both XGS-PON ONUs and legacy XG-PON ONUs, through a native dual upstream rate TDMA scheme, and TDM scheme in the downstream.

Optional wavelength set: consists of G-PON wavelength reuse, for the operators having no legacy Gigabit PON in the deployment area. This enables XGS-PON to co-exist with legacy XG-PON through wavelength overlay.

Cases where the basic XGS-PON wavelength set co-exist with XGS-PON optional wavelength set are perfectly valid.

Exhibit 1010
IPR2024-00899, USPN 9,806,892
39 of 290

A.5.2.4 User network interface (UNI) and service node interface (SNI)

As depicted in Figure A.5.3, the ONU provides the UNI towards end users, while the OLT provides the SNI interface towards the core network. The types of UNI/SNI interfaces depend on the services that the service provider offers. See [ITU-T G.902].

- Examples of UNI are described in clause A.7.2.
- Examples of SNI are described in clause A.7.3.

A.5.2.5 Interface at reference points S/R and R/S

The interface at reference points S/R and R/S at OLT and ONU optical port is defined as $IF_{XGS\text{-}PON}$. This is a PON-specific interface that supports all the protocol elements necessary to allow transmission between the OLT and the ONUs.

A.5.2.6 Layered structure of XGS-PON optical network

The protocol reference model is divided into physical medium, transmission convergence (TC) and path layers (see [ITU-T G.902], the ITU-T G.984.x and the ITU-T G.987.x series of Recommendations). An example applied to XGS-PON is shown in Table A.5.1. In a XGS-PON network, the path layer corresponds to the X-GEM encapsulation layer.

Table A.5.1 – Layered structure of XGS-PON network

Path layer			
Transmission medium layer (Note)	XGS-PON TC layer	Adaptation	X-GEM encapsulation
		PON transmission	DBA X-GEM port bandwidth allocation QoS handling and T-CONT management Privacy and security Frame alignment Ranging Burst synchronization Bit/byte synchronization
	Physical medium layer		Electrical/Optical adaptation Wavelength division multiplexing Fibre connection
NOTE – The transmission medium layer must provide the related OAM functions.			

The XGS-PON TC layer is divided into PON transmission and adaptation sublayers, which correspond to the transmission convergence sublayer of the X-GEM conveying various data types. The PON transmission sublayer terminates the required transmission function on the ODN. The PON-specific functions are terminated by the PON transmission sublayer, and it is not seen from the adaptation sublayer.

The two layers considered are the physical medium dependent (PMD) layer and the transmission convergence (TC) layer.

A.6 Migration scenarios

Gigabit PONs such as G-PON (ITU-T G.984.x series of Recommendations) and 1G-EPON [IEEE 802.3] have been standardized and have now been widely deployed worldwide. With the ever increasing bandwidth demand from consumer and business applications, the most general requirement for a next-generation PON (NG-PON) is to provide higher bandwidth than Gigabit PON. In addition, given the major investments spent on time and money on deploying Gigabit PON mainly

Exhibit 1010
IPR2024-00899, USPN 9,806,892
40 of 290

in the fibre infrastructure, NG-PON must be able to protect the investment of the legacy Gigabit PONs by ensuring seamless and smooth migration capability for subscribers from Gigabit PON to NG-PON.

The following coexistence scenarios have been identified:

- Scenario 1 (Figure A.5.4 and Figure A.6.1): G-PON and XGS-PON through WDM1r, where XGS-PON is using a nominally XG-PON designated port.
- Scenario 2 (Figure A.5.5 and Figure A.6.2): XG-PON and XGS-PON through WDM1r, where XGS-PON is using a nominally GPON designated port.
- Scenario 3 (Figure A.5.4 and Figure A.6.3): XG-PON and XGS-PON in TDMA (upstream)/TDM (downstream) mode.
- Scenario 4 (Figure A.5.4 and Figure A.6.4): G-PON, XG-PON and XGS-PON through WDM1r, where XGS-PON using XG-PON port and coexisting with XG-PON by scenario 3.

Coexistence of scenario 1, scenario 3 and scenario 4, by reuse of the XG-PON wavelength which is addressed by this Recommendation, is enabled through the wavelength band plan enhancements specified in [ITU-T G.984.5], which also provides optional overlay capability of broadcast TV on a separate wavelength.

Coexistence of scenario 2 between XGS-PON and XG-PON, based on XGS-PON using optional wavelength set, is enabled through WDM1r devices as specified in [ITU-T G.984.5], which also provides optional overlay capability of broadcast television (TV) on a separate wavelength.

There are several migration scenarios to meet different service providers' needs. These reflect recognition that differing service introduction strategies might affect requirements for the NG-PON specifications. This clause describes two likely migration scenarios:

PON brown field migration scenario

PON brown field scenario in this Recommendation refers to the deployment scenario where a PON system has already been deployed and network operators decide to leverage this existing fibre infrastructure to offer higher bandwidth carrier services, using XGS-PON. Some subscribers on an existing Gigabit PON or XG-PON system might require an upgrade to such higher speed tier service and the network operator may therefore choose to move over these subscribers to the XGS-PON system, while other subscribers remain on the Gigabit PONs or XG-PON. At a certain point, some network operators may eventually perform a 'forced migration' from Gigabit PON to XGS-PON when the number of Gigabit PON subscribers becomes low. It is likely that both Gigabit PONs and XGS-PONs will continue to coexist for a relatively long time in this scenario. In a similar, but slightly different migration scenario, a network operator might want to replace an existing Gigabit PON with a XGS-PON completely. In this case, it would still make sense to run both Gigabit PON and XGS-PON at the same time and update customers one at a time. But, the upgrade window is rather much shorter.

General requirements for this scenario are as follows:

- coexistence between Gigabit PON and XGS-PON on the same fibre must be supported for the case that the fibre resource is not necessarily abundant;
- service interruption for the non-upgrade subscribers should be minimized;
- XGS-PON must support/emulate all G-PON and XG-PON legacy services in the case of full migration.

PON green field migration scenario

Renovating the access network to FTTx infrastructure is the biggest investment of service providers and may take a long time. When XGS-PON technology becomes mature, service providers might be interested in using XGS-PON to replace copper-based infrastructure or to deploy in a brand new development area for the benefit of higher bandwidth and/or higher splitting ratio. An area where

Exhibit 1010
IPR2024-00899, USPN 9,806,892
41 of 290

Gigabit PON had not been deployed before is referred to as "PON green field". This scenario may help service providers achieve better economics while supporting the same or better bandwidth offer per user as Gigabit PON. In this scenario, the requirement of coexistence with Gigabit PONs is not necessary. In "PON green field" scenarios, coexistence with XG-PON is not required where there will be no XG-PON deployed.

A.6.1 Migration from legacy PON to XGS-PON

To assure this smooth migration capability, overlay through WDM technology in compliancy to optical wavelength allocation described in [ITU-T G.984.5] must be implemented in all ONUs. It will, of course, remain the choice of the operator whether to use this capability or rather run a full PON active devices replacement from the onset of an upgrade process.

In the transition period, to get simultaneous G-PON and XGS-PON working, a WDM1r combiner/splitter is installed in the network, in various scenarios, as illustrated in Figure A.6.1.

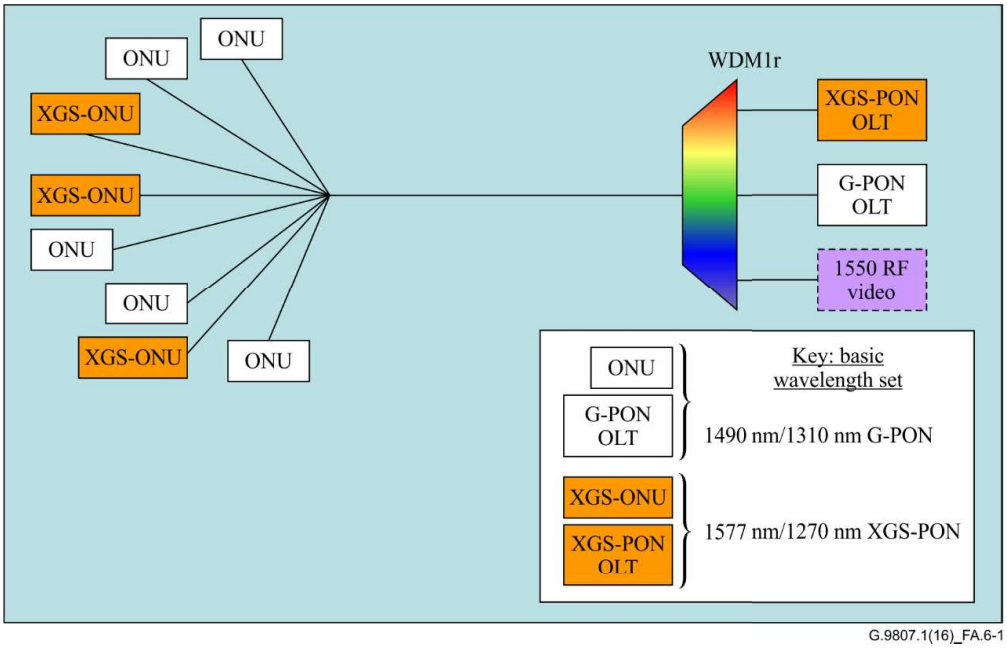

Figure A.6.1 – Coexistence of G-PON and XGS-PON with video overlay (scenario 1 –Basic wavelength set)

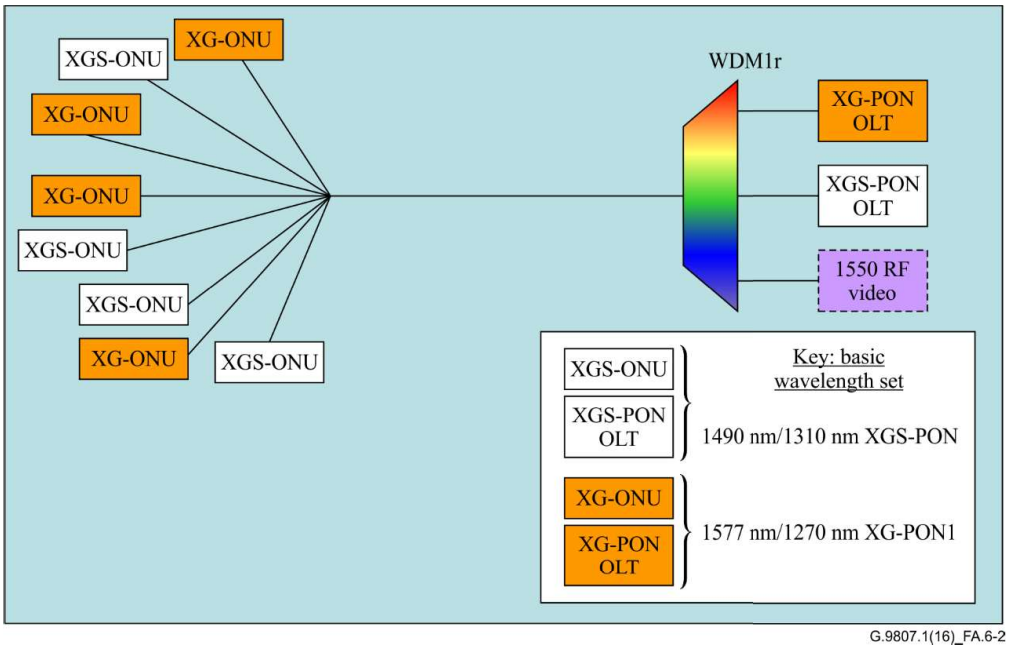

NOTE – In this scenario, the XG-PON OLT could be substituted by an XGS-PON OLT operating in the basic wavelength band.

Figure A.6.2 – Coexistence of XG-PON and XGS-PON with video overlay (scenario 2 – Optional wavelength set)

Any coexistence combination of XG-PON or XGS-PON ONU may be used. Specifically, XGS-PON can coexist with RF video overlay only; the required WDM1r characteristics and performance can be found in [ITU-T G.984.5].

A.6.2 Migration from XG-PON to XGS-PON

The need of coexistence between XG-PON and XGS-PON will be addressed through TDMA, enabling simultaneous hosting of XGS-PON ONUs and XG-PON ONUs on a XGS-PON OLT port. Technical details of TDMA co-existence is provided in Annex C.

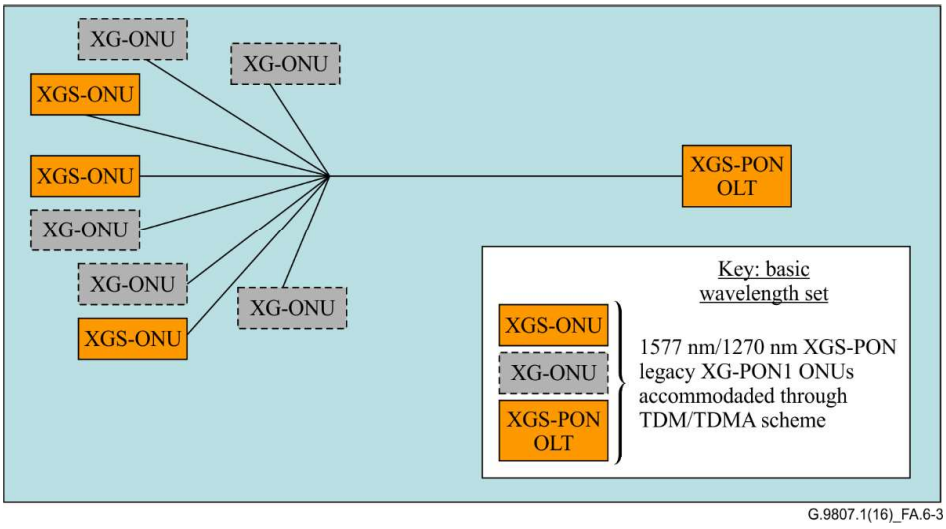

Figure A.6.3 – Coexistence of XG-PON and XGS-PON (scenario3 – Basic wavelength set)

Exhibit 1010
IPR2024-00899, USPN 9,806,892
43 of 290

The full G-PON, XG-PON ONU, XGS-PON and RF Video co-existence is shown in Figure A.6.4.

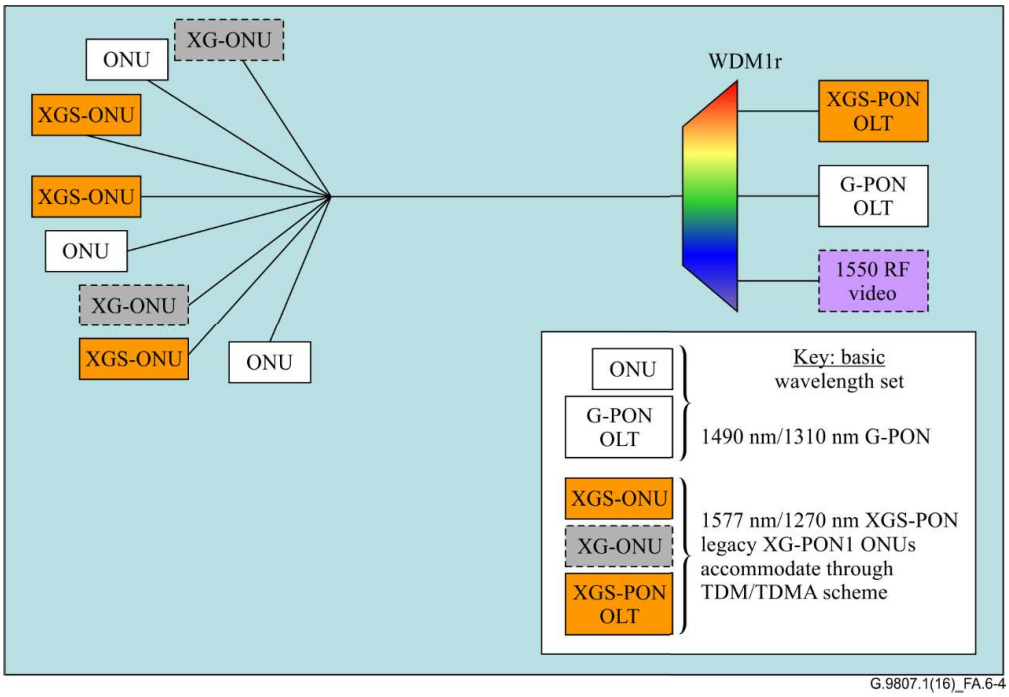

Figure A.6.4 – Full coexistence of G-PON, XG-PON, XGS-PON and RF video (scenario4 – Basic wavelength set)

A.6.3 RE architecture options

This clause focuses on mid-span architectures, since single-end solutions such as those described in [ITU-T G.984.6] and [ITU-T G.987.4] will be part of each dedicated technology options and, as such, will be treated as OLT implementation options.

In the XGS-PON world, two main architectures involving reach extenders are envisioned, as described in Figure A.6.5:

– one for deployments in which network consolidation will take place when migrating from G-PON to XGS-PON;

– the other for deployments in which REs have already been deployed for the G-PON systems, in which case two situations will occur depending on the early RE technology deployed:

  • either the RE had from the start the capability to cover G-PON and XGS-PON requirements; or

  • the early RE has to be replaced by what will onwards be called a "combo" RE.

Exhibit 1010
IPR2024-00899, USPN 9,806,892
44 of 290

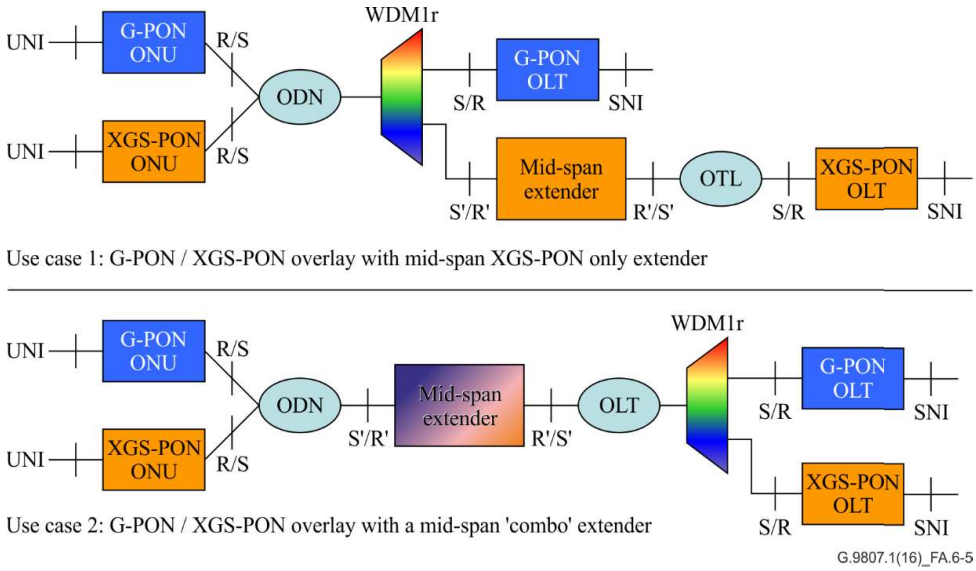

Figure A.6.5 – RE migration scenarios with XGS-PON Basic wavelength set

The goal of using a mid-span RE is to provide additional optical budget with normal OLT and ONU performance, in order to enable, without it being at its maximum, the use of simultaneous full capability of the technology for both distance and split. The use of such REs must not require any change in the OLT and ONU requirements in order to avoid any interoperability issue. Many further options that are under development for ITU-T G.984 and ITU-T G.987 series of Recommendations will also be considered in the XGS-PON environment, addressing the capability to save fibres in the OTL section. Those are for further study.

A.6.4 Migration from XGS-PON to NG-PON2

An evolution path from XGS-PON to NG-PON2 is required to facilitate future capacity upgrades as demand grows. This necessitates coexistence in the case of incremental migration on a per ONU basis. This may be achieved through wavelength overlay using CEx or CEMx devices [ITU-T G.984.5] with either the Basic or Optional wavelength sets.

A.7 Service requirements

A.7.1 Services

Telecommunication networks are evolving from traditional circuit-based networks to the packet-based (i.e., IP/Ethernet-oriented) next generation networks (NGNs), which can effectively provide various services with a common platform (see [ITU-T Y.2001] and [ITU-T Y.2201]). In addition to emerging packet-based services, NGN also provides legacy services such as TDM and POTS using either emulation (complete replication of a legacy service) or simulation (providing a service that is almost the same as the legacy service).

NG-PON is required to fully support various services for residential subscribers, business customers, and mobile backhauling application through its high quality of service and high bit-rate capability. NG-PON should support legacy services, such as POTS and T1/E1 using emulation and/or simulation, as shown in Table A.7.1, to harmonize with the concept of NGN.

- The emulation option delivers packet-formatted traffic through the PON network, i.e., from ONU to OLT, and possibly through some level of aggregation, then converts back to the relevant legacy format to hand it off to the legacy network.

Exhibit 1010
IPR2024-00899, USPN 9,806,892
45 of 290

- The simulation option is an end-to-end packet delivery starting at CPE terminal adaptation device or ONU, to the NG-PON access and the NGN packet network.

Table A.7.1 summarizes examples of NG-PON services.

Table A.7.1 – Examples of NG-PON services

No.	Service		Remark
1	Telephony	VoIP	
2		POTS	Mean signal transfer delay time between T-V (or (a)-V) should be less than 1.5 ms (Note 1). If echo cancellation is used in the network, the mean signal transfer delay time between T-V (or (a)-V) on the PON-based system may be longer, provided end-to-end transfer delay requirements are met. 8 kHz reference has to be provided. (see Note 2) Signal on the T reference point and V reference point must be continuous. Emulation and/or simulation, as defined in [ITU-T Y.2201], is assumed. e.g., packetized voice at ONU
3	TV (real-time)	IPTV	To be transported using IP multicast/unicast
		Digital TV broadcasting	Transported using RF-video overlay (see [ITU-T G.983.3], [ITU-T J.185] and [ITU-T J.186])
4	Leased line	T1	Bearer rate is 1.544 Mbit/s. Mean signal transfer delay time between T-V (or (a)-V) should be less than 1.5 ms. Emulation is assumed primarily.
5		E1	Bearer rate is 2.048 Mbit/s. Mean signal transfer delay time between T-V (or (a)-V) should be less than 1.5 ms. Emulation is assumed primarily.
6	High speed Internet access		UNI is typically Gigabit Ethernet (see [IEEE 802.3])
7	Mobile backhaul		Accurate frequency/phase/time synchronization should be supported.
8	L2 VPN services		Such as Ethernet services, with latest MEF Carrier Ethernet 2.0 extension, etc. (see [MEF 6.1]).
9	IP services		Such as L3 VPN and VoIP, etc.
NOTE 1 – Reference points (a), (T) and (V) are shown in Figure A.5.3. NOTE 2 – See [ITU-T G.703], [ITU-T G.810], [ITU-T G.813], [ITU-T G.8261] and [ITU-T G.8262].			

For business applications, XGS-PON should provide access to Ethernet services such as point-to-point, multipoint-to-multipoint and rooted-multipoint Ethernet virtual connection (EVC) services (also called E-Line, E-LAN and E-Tree, respectively). XGS-PON shall also support accurate frequency/phase/time synchronization for the mobile backhaul application.

As a general requirement, XGS-PON needs to support IPv6.

Exhibit 1010
IPR2024-00899, USPN 9,806,892
46 of 290

A.7.2 User network interfaces to be considered

A UNI is defined as the interface that includes the following conditions:

– interconnection between the access network and the customer;

– described by a well-known standard;

– includes a physical layer aspect.

Some UNIs are provided via an adaptation function, so it is not mandatory that the ONU support those interfaces.

Note that some FTTdp configurations require reverse power feeding of distribution point unit (DPU) from the copper UNI interface.

Examples of UNIs, physical interfaces and connectivity to be provided are shown in Table A.7.2.

Table A.7.2 – Examples of UNI and connectivity service

UNI (Note 1)	Physical interface (Note 2)	Connectivity service (Note 3)
10 Mbit/s/100 Mbit/s/1 Gbit/s Ethernet [IEEE 802.3]	10/100/1000BASE	Ethernet
MoCA 2.0	–	MoCA 2.0
1 Gbit/s fibre UNI	–	Ethernet
10 Gbit/s fibre UNI	10BASE	Ethernet
[ITU-T G.8261]; [ITU-T G.8262]	–	Synchronous Ethernet
[b-ITU-T Q.552]	–	POTS
ISDN [ITU-T I.430]	–	ISDN
V.35	–	–
G.hn [ITU-T G.9960] and [ITU-T 9961]	G.hn	G.hn
VDSL2 [ITU-T G.993.2], ADSL2+ [ITU-T G.992.5]	xDSL	xDSL
G.fast [ITU-T G.9701]	G.fast	G.fast
[ITU-T G.703]	PDH	DS3, E1, E3
[b-ATIS 0900102] and [b-ATIS 0600107]	PDH	T1, DS0, DS1, DS3
SDH/SONET		OC3 – OC192, STM1- STM64
OTN [ITU-T G.709], [ITU-T G.872]		OTU1, OTU2
CPRI/OBSAI (Open Base Station Architecture Initiative)		
1PPS		Synchronizing interface

Exhibit 1010
IPR2024-00899, USPN 9,806,892
47 of 290

Table A.7.2 – Examples of UNI and connectivity service

NOTE 1 – There are many other services accommodated in XGS-PON, but those services do not have specified UNIs. NOTE 2 – Each item in the "Physical interface" column is illustrated by the corresponding entry in the "UNI" column. NOTE 3 – The column labelled "Service" shows which services can be supported by the physical interface.

A.7.3 Service node interfaces (SNIs)

SNI is defined as the interface that includes the following conditions:

– interconnection between the access network and the service node;

– described by a well-known standard;

– includes a physical layer aspect.

Example of SNIs, physical interfaces and services that they provide are shown in Table A.7.3.

Table A.7.3 – Examples of SNI and Services

SNI (Note 1)	Physical interface (Note 2)	Service (Note 3)
1 GigE [IEEE 802.3]	1000BASE	Ethernet
10 GigE [IEEE 802.3]	10GBASE	Ethernet
40 GigE [IEEE 802.3]	40GBASE	Ethernet
100 GigE [IEEE 802.3]	100GBASE	Ethernet
[ITU-T G.8261], [ITU-T G.8262]	–	SyncE
[b-ITU-T G.965]	V5.2	POTS
[ITU-T G.703]	PDH, STM-1e	DS3, E1, E3, STM-1, DS1, DS0
[ITU-T G.957]	STM-1, 4, 16, 64	E1, E3, DS1, DS3, GFP, E4, STM-n, DS0
[b-ATIS 0600107]	PDH	DS0, DS1, DS3
SDH/SONET	SDH/SONET	OC3 – OC192, STM1- STM64
OTN [ITUT G.709] and [ITU-T G.872]	OTN	OTU1, OTU2, OTU3
CPRI/OBSAI (Open Base Station Architecture Initiative)		

NOTE 1 – There are many other services accommodated in XGS-PON, but those services do not have specified SNIs.
NOTE 2 – Each item in the "Physical interface" column is illustrated by the corresponding entry in the "SNI" column.
NOTE 3 – The column labelled "Service" shows which services can be supported by the physical interface.

Exhibit 1010
IPR2024-00899, USPN 9,806,892
48 of 290

A.7.4 Maximum/mean signal transfer delay tolerance

XGS-PON must accommodate services that require a maximum mean signal transfer delay of 1.5 ms.

Specifically, XGS-PON systems must have a maximum mean signal transfer delay time of less than 1.5 ms between T-V (or (a)-V, depending on the operator's preference). See clause 12 in [ITU-T G.982]. Delays introduced by the adaptation functions such as circuit emulation are not included in this value.

Although a section of the delay measurement is T-V for FTTH system or (a)-V for the other application in [ITU-T G.982], in a XGS-PON system, the reference points are not restricted by the system configuration.

A.7.5 Maximum Ethernet packet size

XGS-PON technology shall support Ethernet jumbo frames with lengths beyond 2 000 bytes and up to 9 000 bytes (generally recognized as the upper limit for jumbo frames) when used with XGS-ONUs and should be optionally supported when accommodating legacy XGS-PON ONUs. If jumbo frames beyond 2 000 bytes are used for non-delay-sensitive services on the same PON, the delay-sensitive services and packet network synchronization shall not be degraded by jumbo frame transport.

A.7.6 Synchronization features and quality

Network operators are motivated to leverage the XGS-PON infrastructure and systems to deliver high bandwidth to mobile cell sites. This requires accurate synchronization and timing delivery to the cell sites. Typically, T1 or E1 interfaces have been used for backhaul and these provide the necessary synchronization and timing references. However, it is increasingly important to provide accurate synchronization and timing over packet interfaces (e.g., Ethernet) especially to the cell sites where no T1/E1 interface is available driven by 3G/4G wireless.

XGS-PON OLTs for this application must be able to receive a high quality timing clock as well as to serve as master timing source for the ONUs. The ONUs must be able to distribute the accurate timing/synchronization to the cell sites to meet the cell site frequency/phase/time synchronization requirement.

For this purpose, XGS-PON shall provide a function to transfer the accurate phase/time information between OLT and ONUs taking into account the propagation delay and the processing delay between them. Additional inaccuracy incurred in the PON section shall be much less than the reference accuracy to leave margin for other network sections. Table A.II.1 contains a summary of the synchronization requirements for different wireless technologies; see clause IV.2.2 of [ITU-T G.8261].

The mechanisms, for instance as specified in [ITU-T G.8261] and [ITU-T G.8262], for distributing accurate timing to the 3G/4G cell sites are for further study depending on the performance and economics. In view of the extra complexity in delivering timing to applications such as mobile backhaul, the additional functionality might be limited to specific "CBU" ONUs.

Aspects of clock propagation, frequency and time of day synchronization scenarios, and Ethernet synchronization messaging channel (ESMC) messages transport over PON with IEEE 1588v2, are developed respectively in Appendices A.IV, A.V and A.VI.

A.7.7 Leased line T1/E1 emulation

T1/E1 emulation services require that the timing of the signal be similar at both ends of the packet network. There are four methods identified in clause 8 of [ITU-T G.8261], and they are:

- Network synchronous operation – this method relies on a PRC-traceable clock to be available at both ends of the packet network. This method does not preserve the service clock.
- Differential methods – this method encodes the difference between the service clock and the common reference clock and transmits it across the packet network. The service clock is

Exhibit 1010
IPR2024-00899, USPN 9,806,892
49 of 290

recovered at the far end of the packet network by using a common reference clock available at both ends of the network.

- Adaptive methods – this method relies simply on packet arrival times (or inter-arrival times). Other forms of adaptive methods are available and are based on the use of time stamps and non-linear filtering to achieve better performance.
- Reference clock available at the TDM end systems – this method is a trivial case where both ends of the packet network have access to a timing reference.

Clause 9.1 of [ITU-T G.8261] specifies the maximum wander network limits for circuit emulation.

A.7.8 QoS and traffic management

XGS-PON must be capable of supporting multiple existing and emerging services across multiple market segments, such as consumer, business and mobile backhaul. Like G-PON, XGS-PON must provide simultaneous access to packet-based services, such as high speed Internet access, IPTV and VoIP, as well as legacy services, such as POTS voice and T1/E1. In addition, a XGS-PON must provide access to carrier-grade metro Ethernet services, such as point-to-point, multipoint-to-multipoint and rooted-multipoint EVC services, also known as E-Line, E-LAN and E-Tree, respectively, defined by the Metro Ethernet Forum (MEF) in its MEF Carrier Ethernet 2.0 for business customers. These varieties of services present a broad range of QoS characteristics; therefore, they require systems to provide appropriate traffic management mechanisms.

For the POTS telephone services, XGS-PON must support POTS voice quality with guaranteed fixed bandwidth to meet the low-delay and low-jitter requirements. Similarly, XGS-PON must support TDM services such as E1/DS1s for business customers, and mobile backhauling applications with guaranteed fixed bandwidth to meet low-delay, low-jitter and strict timing requirements.

To provide access to a variety of packet-based services, such as IPTV, VoIP, L2/L3 VPNs and high-speed Internet access, XGS-PON must provide at least four classes of services to map UNI flows. It is desirable for XGS-PON to provide at least six classes of services to map UNI flows. XGS-PON must also support drop precedence within at least two traffic classes.

In addition to priority based classes of services, as indicated above and also specified in [BBF TR-156], XGS-PON ONUs must support rate controlled services (e.g., CIR/PIR) with policing and shaping function in addition to the priority based traffic management, for instance for business applications and mobile backhaul. Business customer ONUs must also support industry specification at UNI ports, such as [MEF 10.1]. However, it is not required for the XGS-PON to provide full MAC address learning for the whole Metro-Ethernet network. The XGS-PON will utilize the Metro Ethernet network capability to provide full Ethernet services.

XGS-PON must support any mix of residential, business, and mobile backhaul traffic within the same PON as illustrated in Figure A.5.2. It must also support a mix of consumer and business users within a multiple subscriber ONU. XGS-PON must support a mix of rate based (including CIR/PIR provisioning, policing, shaping, etc.) and priority based traffic management within the same PON and same ONU.

XGS-PON must support N:1 VLAN, 1:1 VLAN and access to VLAN for business Ethernet service (VBES) service on the same PON.

A.8 Physical layer requirements

The XGS-PON architecture is based on single fibre transmission.

A.8.1 Fibre characteristics

This Recommendation is based on deployment using fibre types described in [ITU-T G.652], which is widely used for G-PON. Newer fibre types exhibiting low-bend radius characteristics defined in [ITU-T G.657] should also be compatible for NG-PON deployments.

Exhibit 1010
IPR2024-00899, USPN 9,806,892
50 of 290

A.8.2 Optical wavelengths of XGS-PON

XGS-PON defines two wavelength sets for waveband reuse:

Basic wavelength set: XG-PON waveband reuse

– for the upstream, the "O- Band", ranging from 1 260 to 1 280 nm;

– for the downstream, "1 577 nm", ranging from 1 575 to 1 580 nm (extension for outdoor is 1 575 to 1 581 nm).

Optional wavelength set: G-PON waveband reuse

– for the upstream, the "O- Band", ranging from 1 300 to 1 320nm to be compatible with all deployed WDM1r devices;

– for the downstream, "1 490 nm", ranging from 1 480 to 1 500 nm.

A.8.3 Bit rates

XGS-PON identifies two transmission speed sets named as follows:

- XGS-PON: nominally 10 Gbit/s downstream, 10 Gbit/s upstream.

In case of the Basic wavelength set scenario, as TDMA co-existence with legacy XG-PON ONUs is considered, the OLT shall also support:

- XG- PON: nominally 10 Gbit/s downstream, 2.5 Gbit/s upstream.

A.8.4 Optical power budget

XGS-PON must be able to operate on nominally 28/29 dB loss ODNs, depending on the wavelength set plan used. The Basic wavelength set aligns with the N1 class of XG-PON for 29 dB, considering the extra loss in the WDM1r for this band. The Optional wavelength set aligns with the B+ class of G-PON for 28 dB, considering the lower loss in the WDM1r for this band. In addition to these loss budgets, provision is also made to accommodate the N2 (31 dB), E1 (33 dB) and E2 (35 dB) power budgets from XG-PON and C+ (32 dB) power budget from G-PON.

When reusing the G-PON wavelength is adopted, since the G-PON port of the WDM1r will be reused, legacy B+ or C+ power budget classes are to be considered.

The detailed specifications for nominal classes and the extended class will be addressed in Annex B.

A.8.5 Split ratio

As many network operators have constructed their ODN infrastructure with 1:32 to 1:64 split for Gigabit PONs, 1:64 split (subject to the overall loss budget) shall be the minimum requirement for XGS-PON to allow the coexistence described in clause A.6. A generic splitter deployment of Gigabit PONs is shown in Figure A.8.1 (a).

In this model, a single-split architecture is a special case, where m = 64 and n = 1 and no splitter is needed at the access node. Some network operators expressed their interest in extending the split beyond 1:64 (e.g., 1:128 to 1:256) to improve XGS-PON overall economics compared to G-PON.

The higher splitter ratio allows to extend PON in the backhaul section as shown in (b) and/or to extend PON towards the end users as shown in (c) to provide flexible splitter configurations and efficiently support a variety of deployment scenarios. Considering these options, the XGS-PON TDMA control function should support a 256-way (or possibly more) logical split. Physical split in the optical layer must be carefully selected to take into account the maturity and cost-effectiveness of optical devices. Reach extension can be used to increase the loss budget, and thus realize a higher split in the physical layer, especially in the cases presented in (b) and (c), in addition to extending the system nominal reach.

Exhibit 1010
IPR2024-00899, USPN 9,806,892
51 of 290

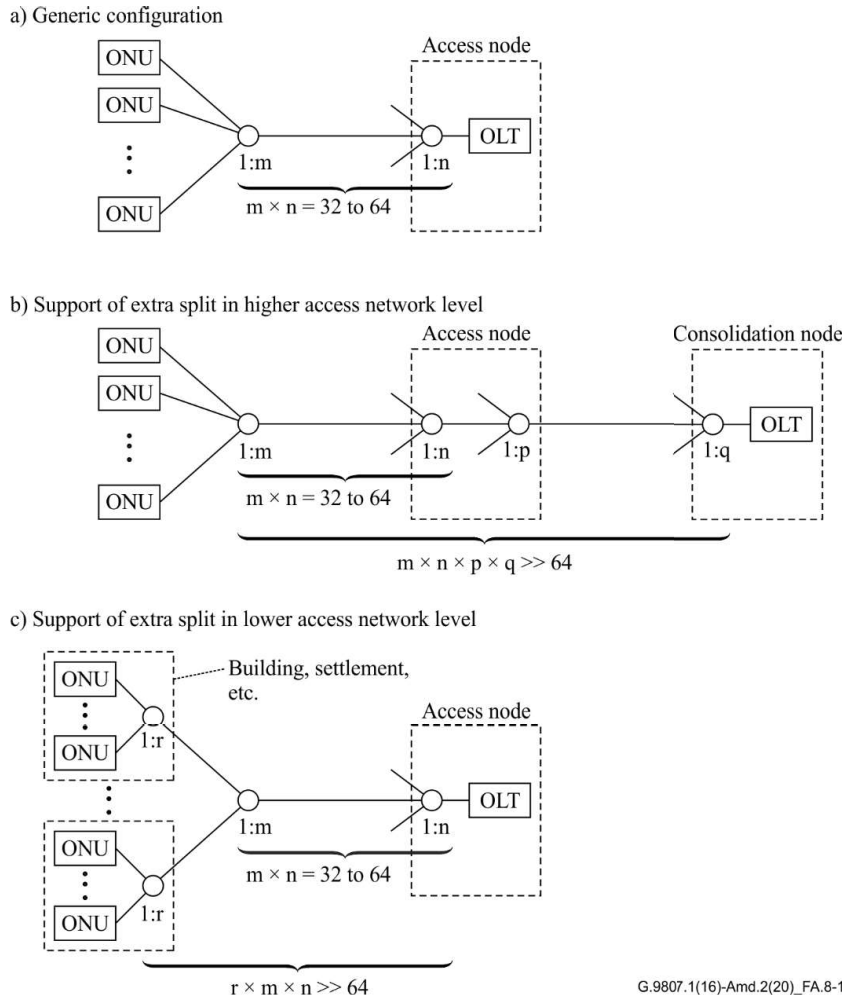

Figure A.8.1 – XGS-PON splitter architecture options

A.8.6 Fibre distance

XGS-PON must support the maximum fibre distance of at least 20 km.

In addition, XGS-PON TC layer needs to support the same requirements as XG-PON, starting with the maximum fibre distance of 60 km. XGS-PON TC layer also needs to support the maximum differential fibre distance of up to 40 km. XGS-PON TC layer also needs to be able to configure the maximum differential fibre distance with a 20 km step.

A.9 System level requirements

A.9.1 Power saving and energy efficiency

Power saving in telecommunication network systems has become an increasingly important concern in the interest of reducing operators' operational expenditure (OPEX) and reducing the network contribution to greenhouse emission gasses. The primary objective of the power saving function in access networks is to keep providing the lifeline service(s) such as a voice service as long as possible through the use of a backup battery when electricity service goes out. For example, some operators require a minimum sustainability for a lifeline interface to operate for 4 to 8 hours after mains outage. Therefore, the XGS-PON TC layer shall support better energy efficiency than the ITU-T G.987 XG-PON TC layer whenever compatible with the service requirements, based on the mechanisms derived from [b-ITU-T G-Sup.45]. The secondary goal is to reduce power consumption at all times.

Exhibit 1010
IPR2024-00899, USPN 9,806,892
52 of 290

It is also an important requirement that service quality and the user experience should not be sacrificed.

Full service mode, dozing mode, cyclic sleep and watchful sleep modes are the options that can offer various levels of power saving during the normal mode of operation depending on the presence of legacy XG-PON ONU. In addition, when the mains outage happens, power shedding should be activated for the power saving capability. Realizing that detailed values may vary for XGS-PON, [b-ITU-T G-Sup.45] compares the efficiency of each power saving technique as well as the level of service impact.

A.9.2 Authentication/identification/encryption

Like G-PON, XGS-PON is a shared-medium based system in which all the ONUs on the same PON receive the full data. Accordingly, countermeasures must be taken to avoid impersonation/spoofing and snooping.

To protect against impersonation/spoofing, authentication and identification mechanisms must be standardized. Use of these mechanisms is optional and will be determined by the operators. They shall include, but will not be limited to:

- identification of ONU serial number and/or a registration ID used for the ONU registration process;
- authentication of customer premises equipment (CPE), based on IEEE 802.1X;
- a strong authentication mechanism is required.

A simple but secure identification method is also necessary for the recovery from the "sleep" mode when the power saving function is used.

To protect against snooping at the ONUs, all unicast data in the downstream direction shall be encrypted with a strong and well characterized algorithm, e.g., advanced encryption standard (AES). Therefore, XGS-PON shall also provide a reliable key exchange mechanism that is necessary to start an encrypted communication. In the upstream direction the encryption function shall be optional, and implemented upon each operator's requirement.

A.9.3 Dynamic bandwidth assignment (DBA)

The XGS-PON OLT shall support DBA for the efficient sharing of upstream bandwidth among the connected ONUs and the traffic-bearing entities within the individual ONUs based on the dynamic indication of their activity. The dynamic activity indication can be based on the following two methods:

- status reporting (SR) DBA employs the explicit buffer occupancy reports that are solicited by the OLT and submitted by the ONUs in response;
- traffic monitoring (TM) DBA employs OLT's observation of the actual traffic amount in comparison with the allocated upstream transmission opportunities.

The DBA definition comprises the reference model that specifies the ideal bandwidth assignment among the contending upstream traffic-bearing entities under the given traffic load conditions. To allow for effective numerical comparison of the DBA implementations, the standard contains the suggested measures of discrepancy between a DBA implementation and the reference model. To guarantee multi-vendor interoperability, the standard specifies the formats of the SR DBA status enquiries and buffer occupancy reports and the associated protocol.

Exhibit 1010
IPR2024-00899, USPN 9,806,892
53 of 290

The OLT may support any of the dynamic activity indication methods or a combination thereof. It is outside the scope of the requirement specification to define which specific methods have to be supported, or how the OLT utilizes the obtained dynamic activity indication information, or how the OLT upstream scheduler is implemented.

DBA spreading across several upstream line rates in case of TDMA coexistence with XG-PON ONUs or redundancy through dual homing is out of scope of this Recommendation.

A.9.4 Eye safety

Given the higher launched optical power that can be injected on the fibre in the XGS-PON era, both at the OLT and the RE level, all necessary mechanisms must be provided to insure that no eye damage can be caused to the end users unaware of the risks, especially if fibre is terminated inside the home. The XGS-PON elements need to conform to the following specific classes defined in [IEC 60825-2], respectively:

- Class 1M for OLT;
- Class 1 for ONU;
- Class 1M for RE.

A.9.5 Dual-rate support

The XGS-PON OLT port supports dual line-rates (nominally 2.5 Gbit/s and 10 Gbit/s) in the upstream direction when operating at the Basic wavelength set. This enables compatibility with XG-PON ONUs co-existing on the same ODN as XGS-PON ONUs.

A.10 Operational requirements

A.10.1 ONU management

A.10.1.1 OMCI managed ONU

It is highly desirable from the network operation perspective to manage a XGS-PON system, i.e., an OLT together with its ONUs, as a single entity, with ONUs being managed via OLTs, wherever possible. Therefore, XGS-PON shall support full PON real-time management through ONU management and control functions, where concepts and approaches implemented for G-PON (e.g., OMCI) should be reused as much as possible.

A.10.1.2 Dual managed ONU

XGS-PON shall optionally support collaborative ONU management partition between XGS-PON OMCI and remote configuration mechanisms for all types of ONU accommodated.

A.10.2 PON supervision

While it is most important to minimize capital expenditure in the initial stage of FTTH deployment, it is getting more important to reduce operational expenditure as well as to optimize the balance between capital expenditure and operational expenditure according to the full deployment of FTTH. The goal of PON supervision is to reduce the operational expenditure of the PON systems, without significantly increasing the capital expenditure by including as much test and diagnostic capability as possible without compromising the available bandwidth for services. Test and diagnostics must be non-service affecting. Current G-PON's capability of basic testing and diagnostics, which operates at the PON and data layers, with reporting back of alarms and events, shall be taken as a basis for XGS-PON.

The ability to reliably differentiate between optical and electrical faults and establish if the faults are in the ODN or in the electronics is a key operator requirement. Inference can usually be made from the presence (i.e., power or equipment failure), or absence (i.e., fibre failure), of the ONU Dying Gasp alarm. Special care will have to be taken about power supply monitoring in case of reverse powered

Exhibit 1010
IPR2024-00899, USPN 9,806,892
54 of 290

distribution point unit (DPU). Several key points for the supervision of XGS-PON can be summarized as follows:

ODN monitoring/checking: Monitoring and on demand checking the condition of ODN independently from a PON system is important to differentiate ODN failures from system failures. It is desirable that such monitoring and checking be available regardless of whether the ONU is in service or even connected. An optical time domain reflectometer (OTDR) is a powerful tool for diagnosing such faults in the ODN, and a power meter and light source can be used to aid in the process. Several demarcation devices are under research for further improving the ODN monitoring and checking.

XGS-PON systems would benefit from an ability to automatically and autonomously detect and locate ODN faults. This is especially critical for the feeder section between the serving central office (CO) and the first-stage splitter, the length of which can be up to 60 km if a RE is used.

End-to-end performance monitoring up to the Ethernet layer: End-to-end performance monitoring enables operators to diagnose and register where customer traffic may have been dropped or throttled. Higher layer tools, such as Ethernet performance monitoring, need to support the capability monitoring and verification of ingress and egress traffic flows in PON network elements.

Proactive versus reactive repair: PON systems with their monitoring and control systems will allow operators to decide on the utilization of proactive or reactive fault repairs in most fault cases. It is of course up to the operators to decide on how to use PON status reports.

Coexistence of XGS-PON with legacy PON via WDM1r: It is desirable to immediately localize any problems in the case of Gigabit PON and XGS-PON coexistence. Interworking of the supervision function between Gigabit PON and XGS-PON is one possibility here, but further studies are necessary.

A.11 Resilience and protection on ODN

Service resilience over previous generations of PONs has not been a strong requirement from operators. XGS-PON is required to support a diverse range of high value services (e.g., IPTV) for residential and also business applications with increasing levels of system integration at the head-ends. Failures in the shared portions of the PON will impact multiple customers and services. Consequently, the capability to offer improved service availability figures in XGS-PON systems will become increasingly important.

Individual operators need to determine the best resilience architecture for their specific market and geography. As such, XGS-PON should include a range of cost-effective resilience options with both duplex and dual-parented duplex system configurations, as defined in clause 14 of [ITU-T G.984.1], as well as the extensions described in Appendices II and III of that same Recommendation. These resilience schemes should be options available on the XGS-PON scenarios whether they use mid-span reach extenders or not. Different types of service and specific offerings will require different recovery speeds. These may range from a few tens of milliseconds, for critical and important services such as e.g., protected leased lines, up to the order of minutes for residential applications. Note that support for resilience options should not increase the cost of such systems if deployed without resilience options.

The protection architecture of XGS-PON should be considered as one of the means to enhance the reliability of the access networks. However, protection shall be considered as an optional mechanism because its implementation depends on the realization of economical systems. It is also likely to use other methods, such as using alternative access technologies, e.g., LTE (Mobile's 4G standard also known as long term evolution), for backup for better economics. Further information on protection switching can be found in [ITU-T G.808.1].

Exhibit 1010
IPR2024-00899, USPN 9,806,892
55 of 290

Appendix A.I

Examples of practical XGS-PON system architecture

(This appendix does not form an integral part of this Recommendation.)

This appendix provides various examples of practical XGS-PON system aspects. A selection of system architectures is illustrated. Then the common protocol stack traces are laid out for all these services and systems.

It should be noted that since XGS-PON can address multiple market segments, e.g., consumer, business and mobile backhaul and the overall scope of all the variants is very large, any single implementation of an ONU will not implement all of the possible features. The objective of this appendix is to only give a comprehensive overview of the options that might be encountered.

A.I.1 Typical system architectures

Figure A.I.1 shows a generic XGS-PON system. This system will be developed more specifically in the next six figures. Note, these figures are illustrative examples, not requirements.

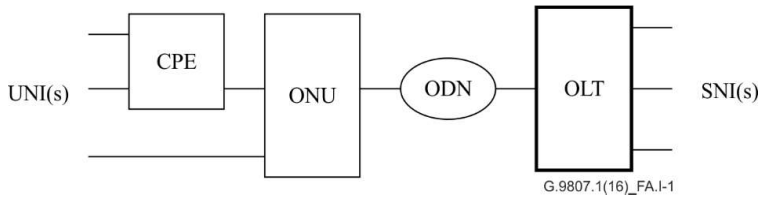

Figure A.I.1 – Generic XGS-PON system

A.I.1.1 OLT variants

Figure A.I.2 shows a pure Ethernet OLT option. In this case, the OLT equipment contains only the XGS-PON adaptation function, and typically (but not necessarily) some level of Ethernet aggregation function. It is the simplest form of OLT, and avoids as much specific service linkages as possible.

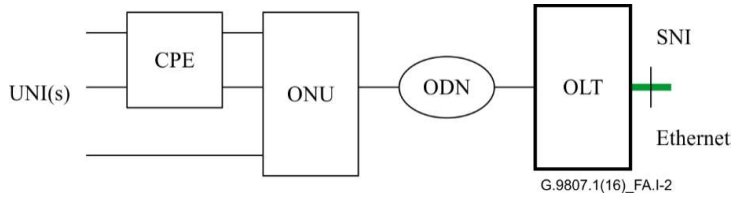

Figure A.I.2 – Pure OLT scenario

Figure A.I.3 shows a grooming OLT scenario. In this case, the OLT takes on additional service grooming functions, typically including voice gateway and TDM circuit emulation functions. Note that these services can be provided using a 'pure OLT' and a separate voice gateway.

Exhibit 1010
IPR2024-00899, USPN 9,806,892
56 of 290

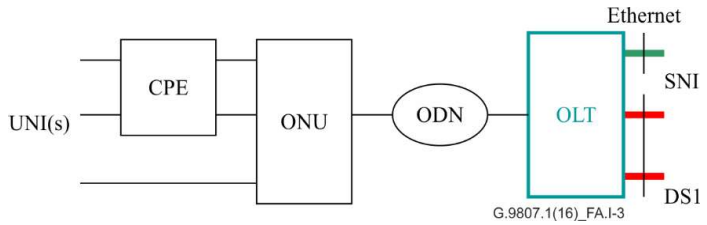

Figure A.I.3 – Grooming OLT scenario

A.I.1.2 ONU variants

Figure A.I.4 shows the 'VDSL/POTS ONU' variant. The distinguishing feature of this variation is that the ONU is used to create copper-based interfaces just like a digital loop carrier/digital subscriber line access multiplexer (DLC/DSLAM) would do. There are two sub-types of this scheme. The first is where the ONU provides both POTS and VDSL interfaces to the customer, trying to centralize functions and reduce the need for CPE. The second is where the ONU provides VDSL-only interfaces, trying to minimize the ONU's size and power, albeit at the cost of requiring POTS derivation at the CPE. This alternative is useful mostly in FTTB and FTTC applications.

Note that DPU naming of ONU applies whenever reverse powering through the copper drop(s) is used in the ONU modem variants below.

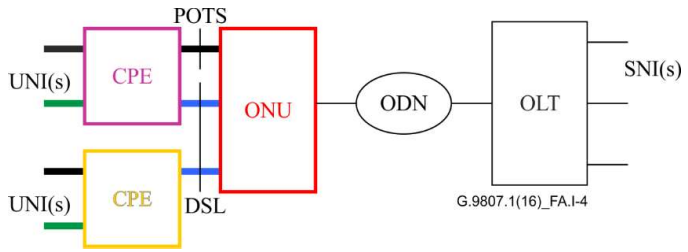

Figure A.I.4 – VDSL/POTS ONU scenario

Figure A.I.5 shows the 'XGS-PON Modem' variant where the ONU is made as small and simple as possible. In this case, it resembles a modem that provides layer 1 and 2 interworking between the XGS-PON optical interface and the data link technology. The data link then carries all service flows to the CPE, which does the bulk of the service interworking function. The popular data link technologies in use today are Cat5-based Ethernet, HPNA-over-Coax and MoCA. This system is mostly used in FTTH applications.

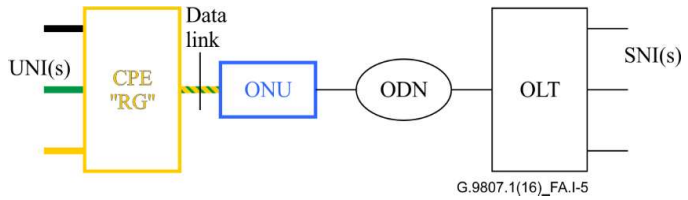

Figure A.I.5 – XGS-PON modem scenario

Exhibit 1010
IPR2024-00899, USPN 9,806,892
57 of 290

Figure A.I.6 shows the 'integrated ONU' situation. This can be thought of as the merger of the XGS-PON modem and the service-deriving CPE in the previous diagram. However, this merging of functions has critical implications on what system is responsible for the management of the services. It should also be noted that even though significant functions have been incorporated into the ONU, a CPE typically still is placed in the home. This scenario is also popular for FTTH.

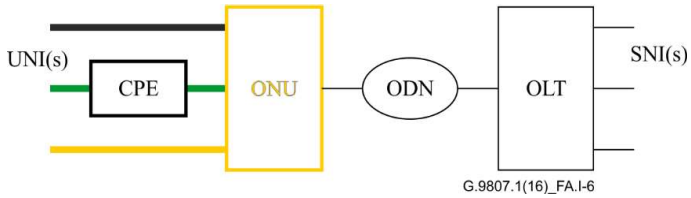

Figure A.I.6 – Integrated ONU scenario

Figure A.I.7 shows the 'Residential gateway ONU' situation. This can be thought of as the merger of the integrated ONU and the service-deriving CPE in the previous diagram. This draws layer 3 functionalities into the ONU, including such items as routing, network address translation (NAT) and firewall functionality. This scenario is also popular for FTTH.

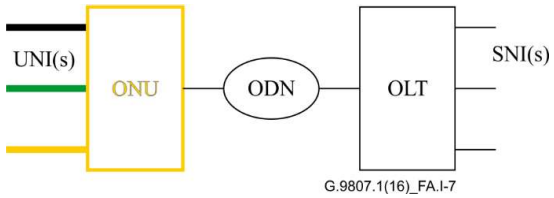

Figure A.I.7 – Residential gateway ONU scenario

A.I.2 Service protocol stacks

This clause describes a list of protocol stacks for the important service traces in the XGS-PON systems. By service, it is meant the basic layer 2-3 interfaces that have major impact on the XGS-PON equipment. Many high-layer services can ride on top of these interfaces; however, they tend not to have such a concrete impact on the XGS-PON equipment, or at least, not an impact different than any other access system.

A.I.2.1 Common functions

The common XGS-PON layers are derived from the ones of XGS-PON shown in Table A.5.1 and shall be able to accommodate the ones that specify the XGS-PON physical medium and the physical media dependent layer (optics) described in Annex B. Similarly, XGS-PON TC will be derived from [ITU-T G.989.3] described in Annex C. The XGS-PON TC shall also include compatibility with [ITU-T G.987.3], relative to the definition of the transmission convergence layer. The [ITU-T G.987.3] compatibility deals primarily with the construction of the transmission frame and the encapsulation of payload datagrams inside XG-PON encapsulation method (XGEM) fragments. This tentatively has the ability to accommodate XG-PON ONUs with a XGS-PON system. There is a wealth of other auxiliary features described in Annex C, including the PLOAM channel, dynamic bandwidth allocation and the PON-level quality of service (QoS) frameworks that are possible.

It should be noted that the DBA algorithm is not specified in any standard, but this is not an interoperability issue, and the non-specification has been intentional.

The QoS system in the XGS-PON defines a scheme where each ONU may contain one or more transmission containers (T-CONTs). Each T-CONT may contain one or more XGEM ports, which are the smallest connection entity that XGS-PON systems handle. Similar to [b-ITU-T G.984.3],

Exhibit 1010
IPR2024-00899, USPN 9,806,892
58 of 290

XGS-PON may leave the arrangement of T-CONT and GEM ports open for the flexibility. It is expected that a similar arrangement as the current mainstream arrangement of the four service-bearing T-CONTs per ONT per service category, with each T-CONT representing a different class of service will be followed.

[ITU-T G.988] defines the ONU management and configuration interface (OMCI). It defines both a management information base (MIB) for all the functions controlled in the ONU, as well as the ONU management communication channel (OMCC) that provides all the mechanisms required for the OLT to provide fault, configuration, accounting, performance, security (FCAPS) functionality for the ONU.

The OLT management is a somewhat more complex object. It contains, by proxy, all the MIBs of all the ONUs supported by that OLT, as well as all the other MIBs that describe the other functions in the OLT. This MIB is defined by several standards groups, including the Internet Engineering Task Force (IETF) and the Tele-Management forum (TMF). Typically, these MIBs are accessed using standard IETF defined protocols (SNMP over TCP/IP). Most OLTs provide a dedicated interface for this management traffic.

All of the functions mentioned above are common functions involved in all of the service traces that follow. They will be more compactly represented in the later diagrams for the sake of brevity. Figure A.I.8 illustrates the XGS-PON common functions.

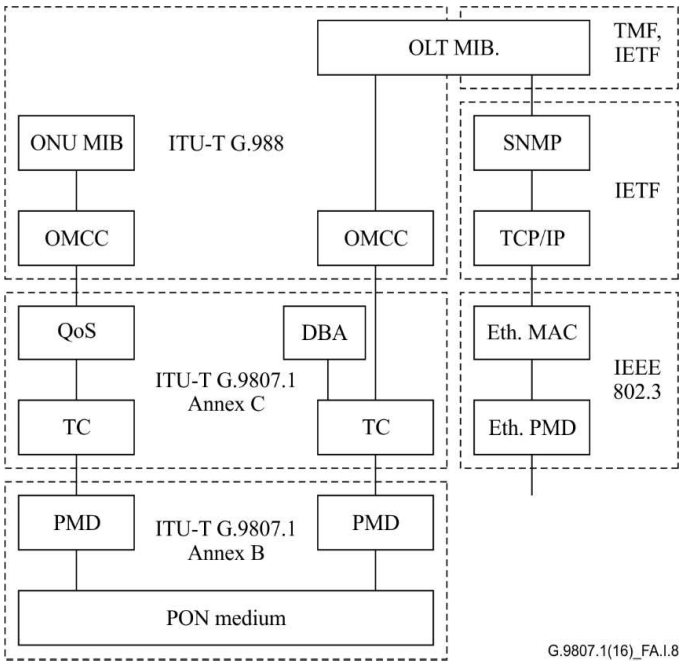

Figure A.I.8 – XGS-PON common functions

The XGS-PON real-time management clock service is shown in Figure A.I.9. The OLT receives real-time clock data (typically using network time protocol (NTP), over an Ethernet interface via user datagram protocol (UDP) over IP). The OLT thereby maintains its own internal real-time clock (RTC), which it uses to time-stamp all manner of event data. Other methods of establishing the OLT RTC are possible, see Figure A.I.11.

The ONU does not extend this RTC for the purposes of management. Rather, its performance monitoring and event collection processes are synchronized with those of the OLT via the OMCI. The OLT routinely collects all of this data every 15 minutes, and logs it with the OLT RTC.

Exhibit 1010
IPR2024-00899, USPN 9,806,892
59 of 290

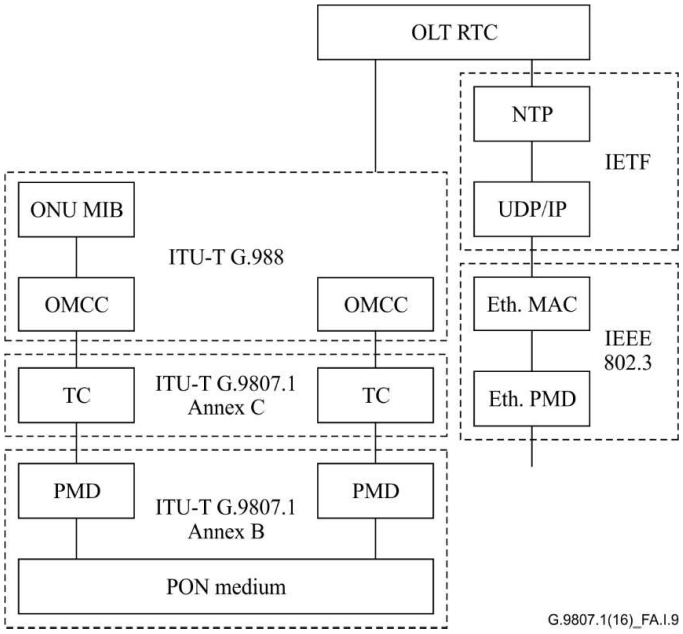

Figure A.I.9 – Real-time management clock service

The XGS-PON network clock scheme for passing frequency synchronization to ONU is shown in Figure A.I.10. The OLT needs to obtain a high quality traceable timing clock, which serves as the master for all XGS-PON interface timing. The normal source for the OLT's clock is a building integrated timing source (BITS) timing input. However, in cases where a BITS source is not available, then an alternative method is needed. The alternative could be synchronous line timing from a SNI that is traceable to the network clock, or a packet-based timing.

Once the OLT network clock is established, it is used to source timing to the XGS-PON interfaces, which in turn distribute timing to the counterpart ONU XGS-PON interfaces. The ONU equipment then obtains its network clock from the XGS-PON interface. This timing signal is ideal for TDM service interworking functions that are integrated into the ONU. Typically, this timing signal is not available at UNI. However, if the timing signal is provided to the terminal adapters, then among many synchronization methods, the synchronous Ethernet method provides more precise synchronization.

Exhibit 1010
IPR2024-00899, USPN 9,806,892
60 of 290

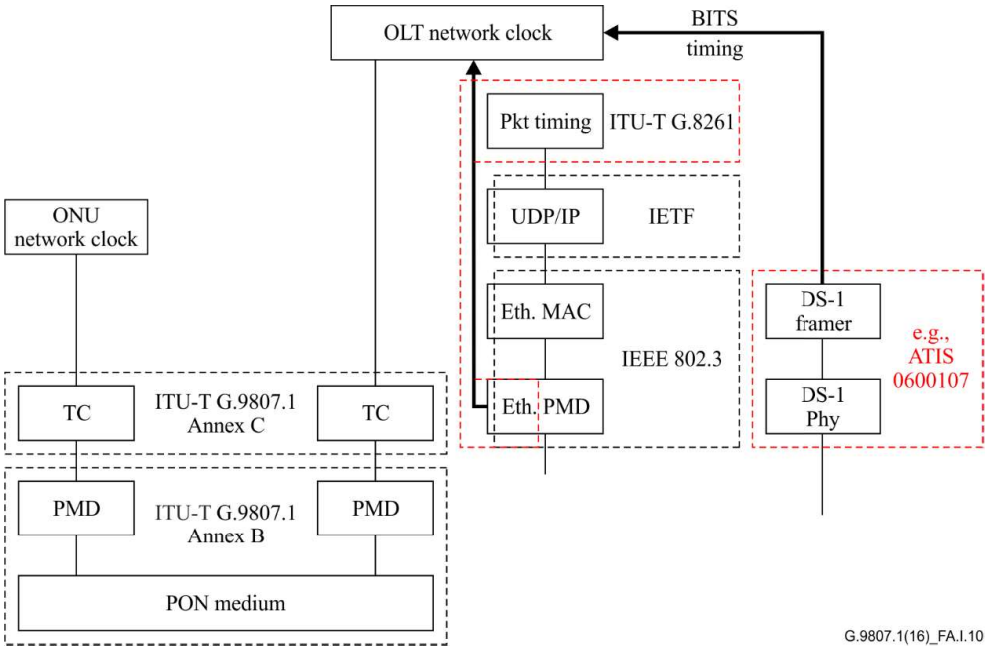

Figure A.I.10 – Example of network clock service

For applications where the ONU requires a very accurate real-time clock with phase errors in the nanoseconds range, the following precision real-time clock is defined. The OLT obtains a precise real-time clock, typically using [IEEE 1588], optionally with some additional assistance of the previously mentioned network clock service. The OLT then passes this clocking information to the ONUs using a combination of the TC layer and the OMCI layer. The ONU can then calculate the precise time, and establish its precision RTC. If the ONU must pass the precision RTC on to client equipment, it can support the IEEE 1588 protocol towards the UNI side.

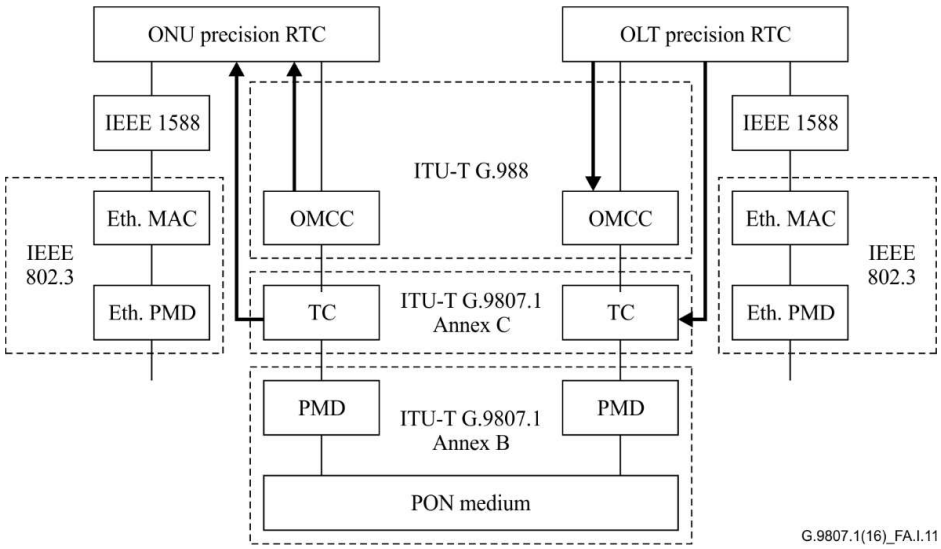

Figure A.I.11 – Precision real-time clock service

A.I.2.2 Data functions

The layer shown for Ethernet service is shown in Figure A.I.12. In the ONU, Ethernet frames as defined in [IEEE 802.3] are extracted from the TC layer. In some ONUs, the Ethernet layer is quite

Exhibit 1010
IPR2024-00899, USPN 9,806,892
61 of 290

abbreviated, and little processing is done on the frames from their reception on the XGS-PON interface to their transmission on the UNI. In other ONUs, true bridging is performed, with MAC address processing, and potentially more. In some cases, point-to-point protocol over Ethernet (PPPoE, not shown) is supported; however, this scheme seems to be waning.

OLT and ONU share the responsibility of access node VLAN requirement defined in [b-BBF TR-101]. To enhance the interoperability of G-PON, [BBF TR-156] further provides the guideline on specific VLAN operations at G-PON OLT and at ONU for 1:1, N:1, and VLAN-based business Ethernet services (VBES) defined in [b-BBF TR-101]. In general, this guideline should be applied to XGS-PON as well.

For N:1 service, ONU adds a S-tag to upstream un-tagged frame, or translate the customer Q-tag to a S-tag, then OLT will pass through the S-tagged frame to the upstream.

For 1:1 service, ONU always adds a tag to untagged frames or translates an incoming Q-Tag in the upstream direction. In the case of single tagged VLAN at the V interface, OLT will pass through the S-tag added by ONU to the upstream. In the case of double tagged VLAN at the V interface, the OLT adds a S-tag on the top of the C-tag that the ONU provided.

For the VBES service, the U interface can be untagged, single tagged, or double tagged. For the untagged or single tagged frame, the ONU adds the S-tag, and the OLT passes through the tag just like in the N:1 model. For the case in which customer frames are double tagged, the frames with valid S-tags are accepted and may be translated to a new S-tag at ONU, and then passed through the OLT.

The traffic leaves the OLT going into the network over some type of Ethernet interface, for connection to an edge routing device or other Ethernet aggregation devices.

It should be noted that there are several different interfaces that can take the place of an Ethernet physical interface. These include xDSL (e.g., see below), MoCA, HPNA, HPNA-over-Coax, 802.11 Wi-Fi and perhaps others yet to be devised. However, due to Ethernet's pervasive nature, all of these alternative PHYs are defined so that they operate nearly the same as Ethernet, and so their impact on the XGS-PON system is rather small.

All of these ONU features are controlled via the OMCI, as defined in [ITU-T G.988].

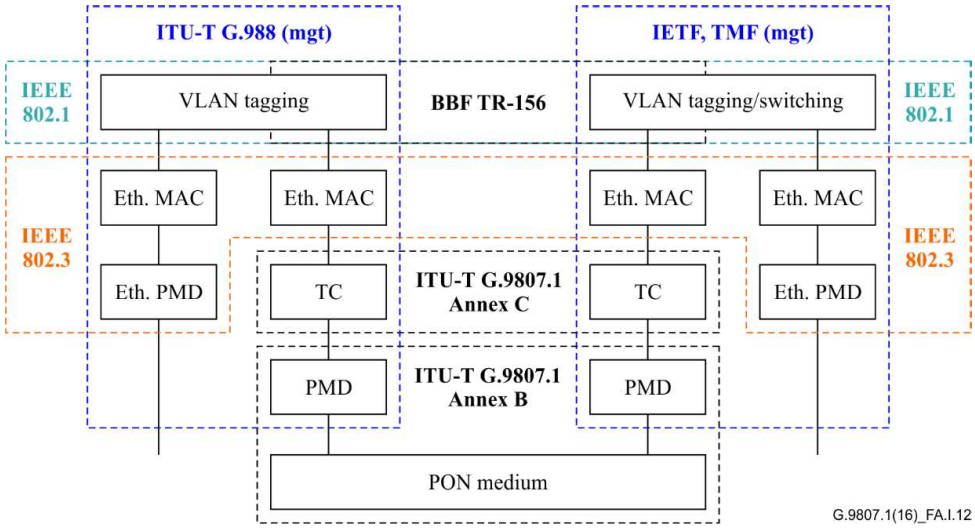

Figure A.I.12 – Ethernet data service

The VDSL2 service is shown in Figure A.I.13. The first thing to be said is that the DSL type that is most relevant for XGS-PON is VDSL2 (defined in the [b-ITU-T G.993.x]), using packet transport mode. It is possible that ADSL2+ or VDSL1 might be implemented for compatibility reasons;

Exhibit 1010
IPR2024-00899, USPN 9,806,892
62 of 290

however, it will not be the main thrust of most XGS-PON development. With this said, the VDSL2 VTU-O function in the ONU operates as an Ethernet PHY, and most of the layer diagram is similar to that of an Ethernet service. There are important differences, the biggest of which is the presence of multiple bearer channels in the same port. Each of these bearers would be treated as a 'virtual PHY', and the overall system is still unchanged.

The management of the VTU-O located in the ONU is described in [ITU-T G.988].

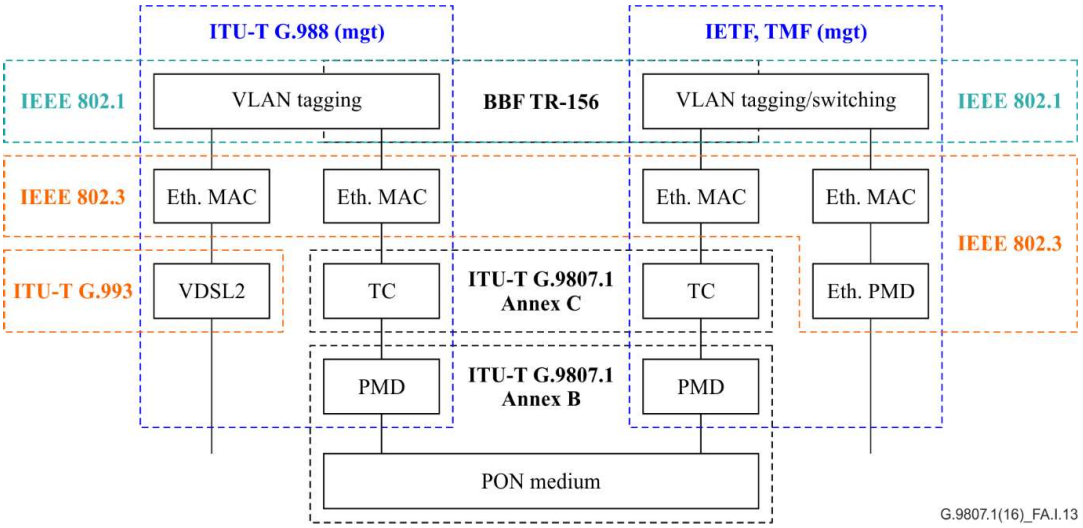

Figure A.I.13 – VDSL2 service

The G.fast service is shown in Figure A.I.13b where a dual management scheme of the ONU is represented following the BBF retained NETCONF/YANG description in [b-BBF TR-355] for such UNI.

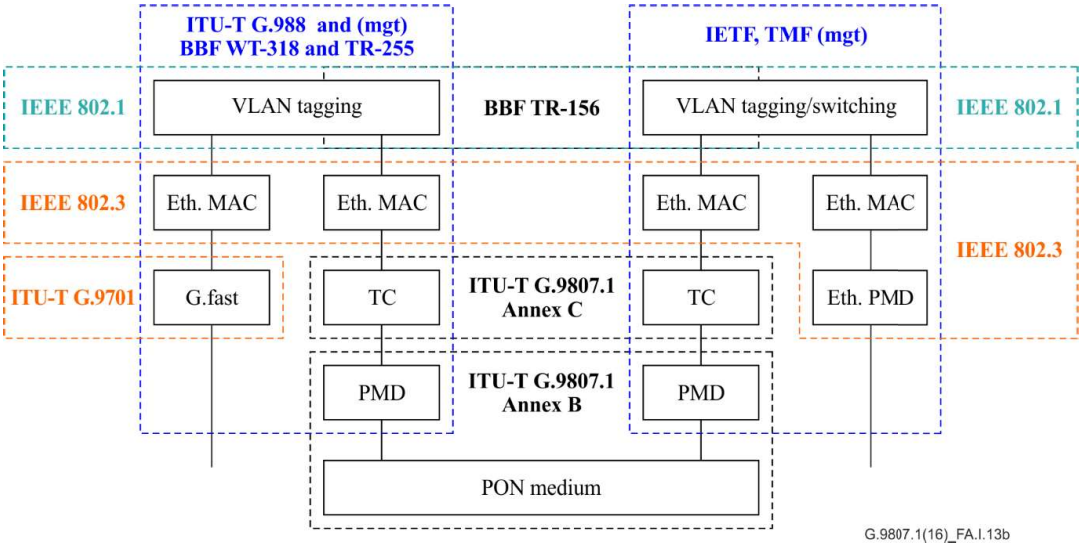

Figure A.I.13b – G.fast services

Figure A.I.14 describes the multicast service. This is really a logical service, usually provided in conjunction with an Ethernet UNI (or similar). However, it has impact on the XGS-PON system, so it is included here. The multicasting interactive signalling is provided by the IETF IGMP, versions 2

Exhibit 1010
IPR2024-00899, USPN 9,806,892
63 of 290

or 3 for IPv4 and MLDPv2 for IPv6. This IP-layer multicasting topology is typically translated into Ethernet-layer multicasting via the trivial mapping defined in the [b-IEEE 802.1] standards. The management of multicasting, including the eligibility of UNIs to receive multicast traffic, the XGS-PON ports that contain the multicast traffic and their interconnection are defined in [ITU-T G.988].

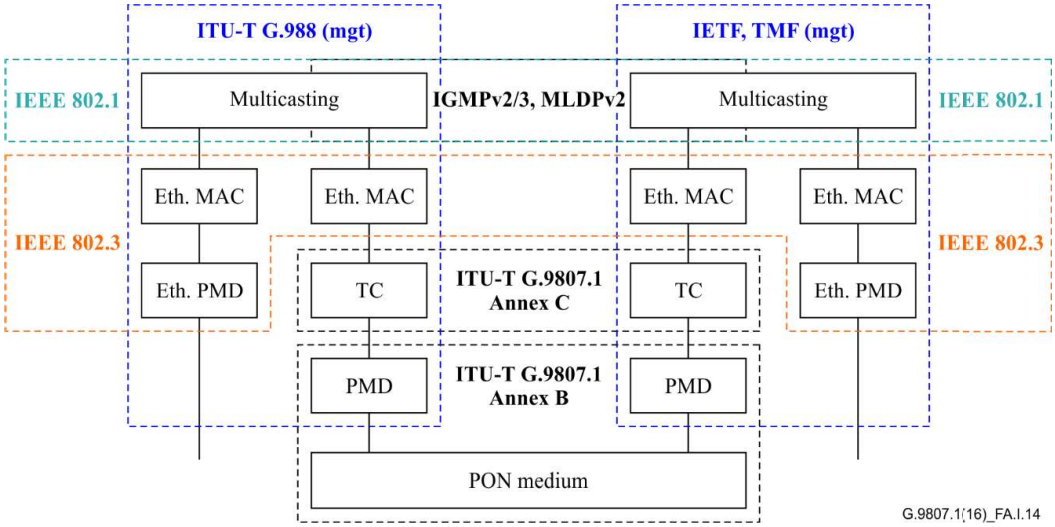

Figure A.I.14 – Multicast service

A.I.2.3 Voice functions

The packet-based voice service flow is illustrated in Figure A.I.15. By packet voice service, it is understood a voice service that does not terminate on a class 5 TDM switch but instead is transported via an IP network to its destination. The mainstream protocol system used in this scenario is session initiation protocol (SIP), running over RTP/UDP/IP, all defined in the IETF RFCs. This is easy to say, but because SIP-based VoIP aims to replace the class 5 switching system, it must therefore implement the sizable set of voice service features. A great deal of interoperability engineering must be done in any combination of VoIP-ONU and Softswitch.

The voice CODECs are defined in the [b-ITU-T G.711.x], [b-ITU-T G.723.], [b-ITU-T G.726] and [b-ITU-T G.729.x] family. It should be noted that while the majority of VoIP systems are actively exploring advanced CODECs for compression reasons, XGS-PON is not concerned with this, since bandwidth is plentiful. In contrast, the codec selection here is mainly driven by interoperability with the far end of the SIP VoIP session.

The POTS UNI is defined for the large part by national standards (e.g., European operators use [b-ETSI ETS 300 001]). However, it must be noted that POTS remains a very intricate service, and many operators have special requirements on the POTS interface, particularly on the lowest-level mechanical and electrical specifications of the metallic interface.

From the SIP agent in the ONU, the service flow traverses a path very similar to the standard Ethernet service. The user traffic, both bearer and signalling, leaves the OLT via an Ethernet interface, usually shared with other services.

The management of the packet voice service may be varied. [ITU-T G.988] provides a full FCAPS support of SIP VoIP. However, there are several other in-band systems that are in-play, such as [b-BBF TR-069], IETF sipping and various proprietary configuration servers. These in-band systems are good in that they can manage VoIP terminal adapters, especially for the in-home unit, anywhere on a network, so they have a wide reach. However, most suffer from poor practical standardization, and a lack of interactive features (such as the support of alarms and performance management). To

Exhibit 1010
IPR2024-00899, USPN 9,806,892
64 of 290

help address this last point, even when an in-band system is used for configuration of VoIP, the OMCI can still be used to gather alarms and PM information. This is basically a mixed management system.

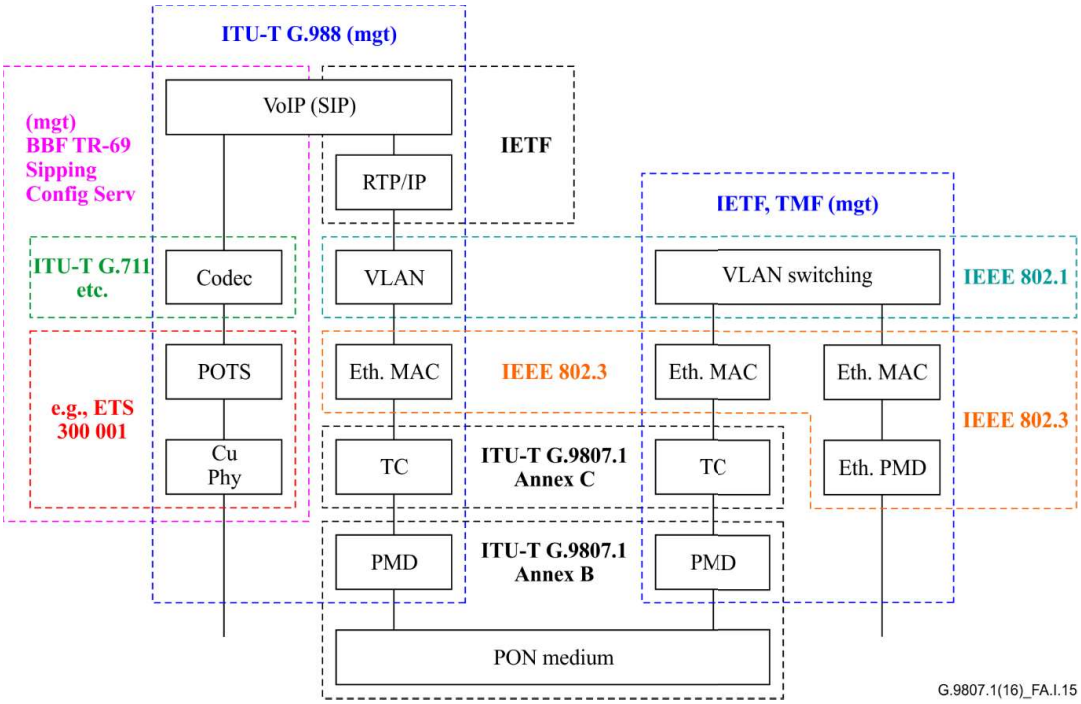

Figure A.I.15 – Packet voice service

The protocol stack diagram for the circuit-switched voice service is shown in Figure A.I.16. In this scenario, VoIP is being used to transport the voice signals from the ONU to the class 5 TDM switch in the central office, and no further. The protocol used in this case is usually [b-ITU-T H.248.x], since this system is suited to voice gateway interfaces, of which the ONU and OLT or possibly an aggregated uplink node each has one.

At the ONU, from the codec and below, the arrangement is exactly the same as in the packet voice case.

At the OLT or possibly an aggregated uplink node, the ITU-T H.248 flow is terminated, usually in a special purpose voice gateway module. This module's function is to regenerate the customer's voice interface, and format the data representing that interface in the way that a conventional DLC system would, as defined by the appropriate regional standard (e.g., ITU-T V5.2). This interface, most commonly carried physically by DS1 or E1 interfaces, can then be tied directly into a class 5 switch with integrated digital loop carrier (DLC) interfaces. The whole intent is to minimize the impact of the XGS-PON deployment on the normal operation of voice services in the central office.

The management of this kind of VoIP also has the potential for standard overlap, since all the options are available for ITU-T H.248 ONUs. However, the OMCI method is used quite often in this case, since the advantages of the in-band system all but disappear for this scenario. The OMCI is a self-contained solution for the management of voice services on XGS-PON, and seems an easy choice in this scenario.

There are additional combinations of transport protocols, functional architectures, and management protocols possible. The intent of the two illustrations here is to highlight the most active combinations.

Exhibit 1010
IPR2024-00899, USPN 9,806,892
65 of 290

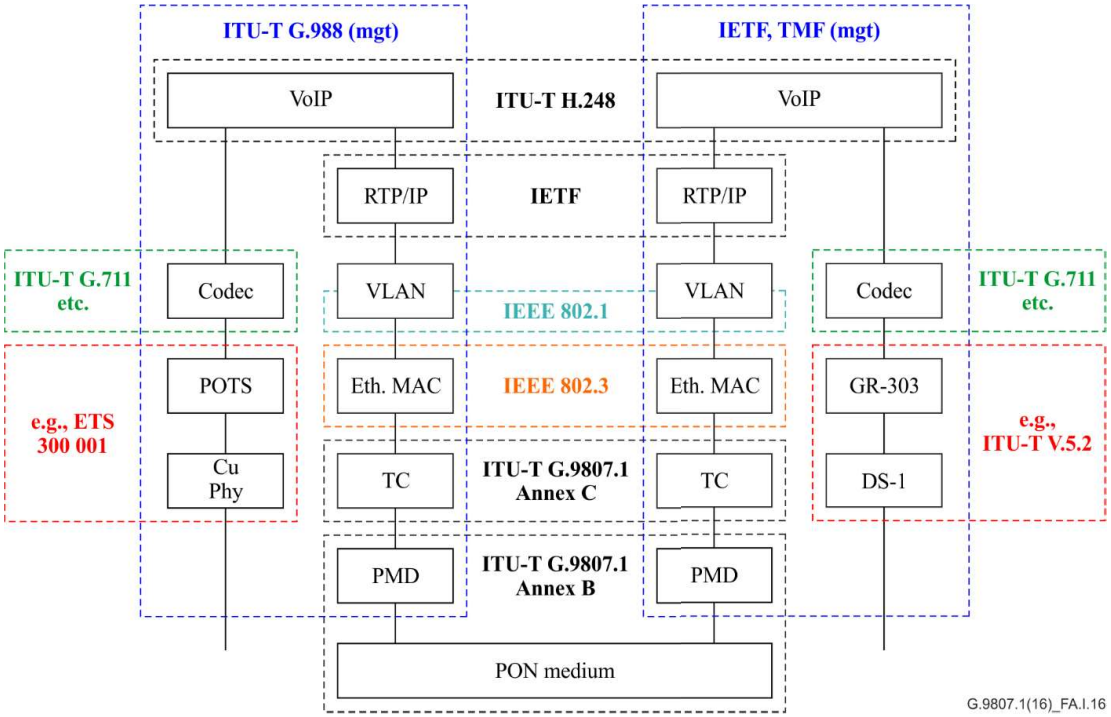

Figure A.I.16 – Circuit-switched voice service

A.I.2.4 Circuit emulation functions

TDM interfaces can also be supported the over packet transport on XGS-PON, as shown in Figures A.I.17 and A.I.18 (note that the DS-1/E1 framer would not be required for a transparent T1/E1 service). There are several options that can be exercised here. The first involves the transport of the actual TDM payload, using either a variant of the IETF PWE3 system of protocols, or the Metro Ethernet forum's MEF-8 protocol. The second involves the use of a local OLT TDM interface, or the use of a packet interface on the OLT leading to a gateway somewhere else in the network. This would seem to present quite a large set of alternatives, but in practice it has turned out not to be a big issue because most hardware support nearly all of the options. So, interoperability is mostly a matter of negotiating the transport protocol. Circuit emulation may also require a network clock to be delivered to the PWE3 interworking functions. Differential timing mode supports better jitter/wander performance than adaptive mode.

The XGS-PON core, up to and including the VLAN layer is similar to the typical Ethernet service.

The actual TDM interfaces are defined in, for example, [ITU-T G.703] for DS1 and E1 interfaces, or the appropriate regional standard (e.g., [b-ATIS 0600107] for DS1 interfaces, and [b-ETSI ETS 300 166] for E1 interfaces).

The management of either PWE3 or MEF-8 interworking is described in [ITU-T G.988].

Exhibit 1010
IPR2024-00899, USPN 9,806,892
66 of 290

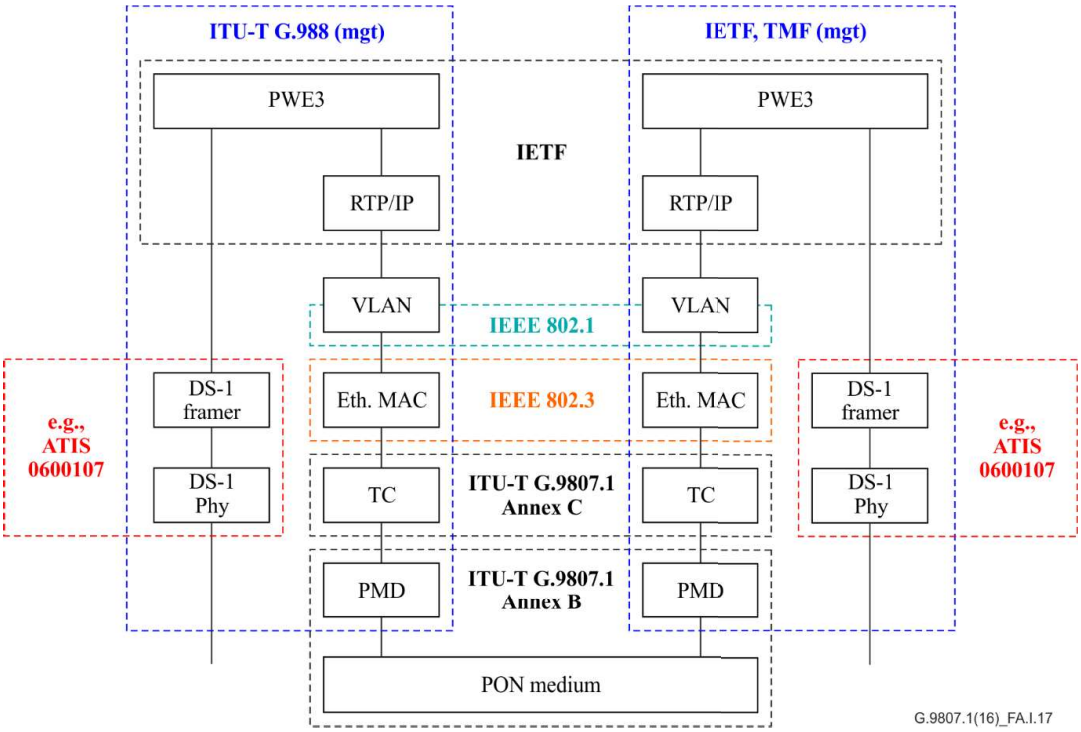

Figure A.I.17 – Packet TDM service using PWE3 and grooming OLT

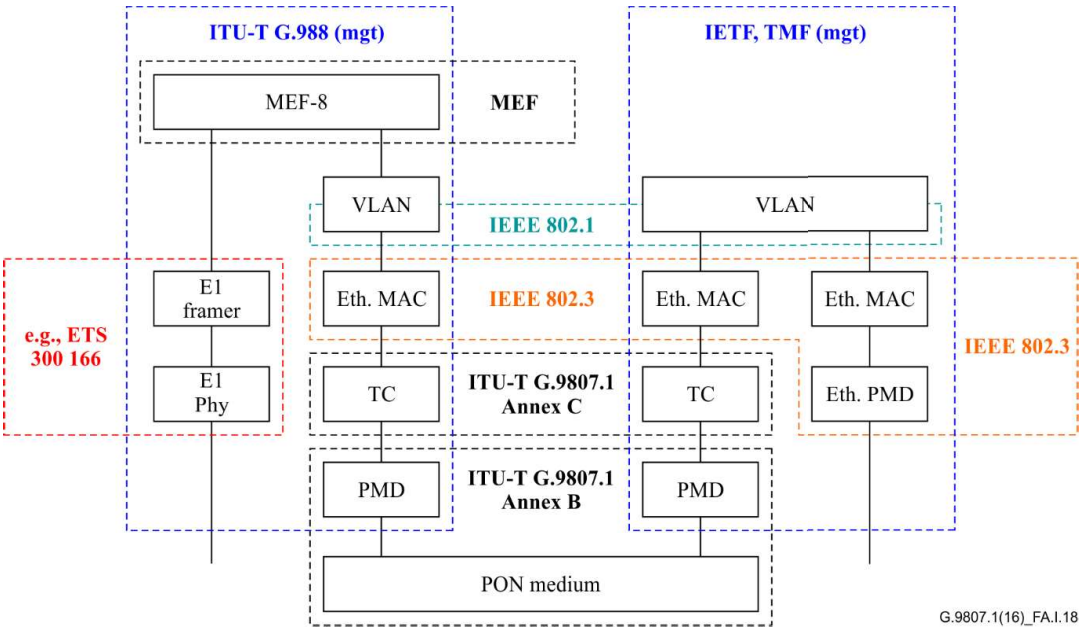

Figure A.I.18 – Packet TDM service using MEF-8 and pure OLT

A.I.2.5 Video overlay functions

Figure A.I.19 shows the video overlay service. This is carried on the PON using a third wavelength, and is practically distinct from the other services. The signal format delivered to the customer is defined by Society of Cable and Telecommunication Engineers (SCTE) standards, and the management of the ONU interface is given by [ITU-T G.988]. The optical interfaces throughout the rest of the service path are generally defined by [ITU-T J.186]. In practice, the details of the video

Exhibit 1010
IPR2024-00899, USPN 9,806,892
67 of 290

OLT and subtending optical amplifiers are left to network operator engineering, especially the signal levels at each point in the network. This is due to the large variations in network physical topology and channel plans.

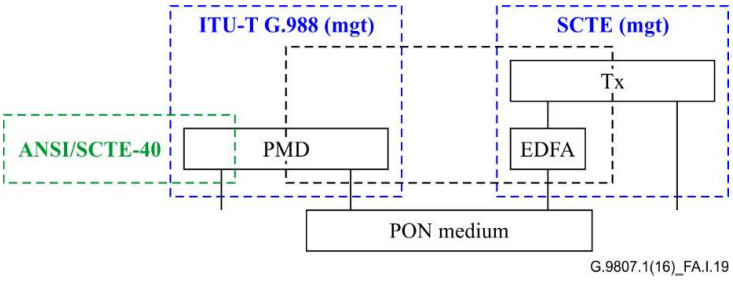

Figure A.I.19 – Video overlay service

Exhibit 1010
IPR2024-00899, USPN 9,806,892
68 of 290

Appendix A.II

Synchronizing requirements for wireless in CBU scenario

(This appendix does not form an integral part of this Recommendation.)

Table A.II.1 lists synchronization requirements for wireless in CBU scenario.

Table A.II.1 – Synchronization requirements for wireless

Application	Synchronization requirements
UMTS-FDD	• Frequency accuracy for the radio interface of the base stations is ±50 ppb • For Pico base stations, the accuracy can be relaxed to ±100 ppb
UMTS-TDD	• Frequency accuracy for the radio interface of the base stations is ±50 ppb • For Pico base stations, the accuracy can be relaxed to ±100 ppb • The phase alignment of neighbouring base stations must be within 2.5 μs
CDMA2000	• Frequency accuracy for the radio interface of the base stations is ±50 ppb • For Pico base stations, the accuracy can be relaxed to ±100 ppb • The pilot time alignment error should be less than 3 μs and must be less than 10 μs
TD-SCDMA	• Frequency accuracy for the radio interface of the base stations is ±50 ppb • For Pico base stations, the accuracy can be relaxed to ±100 ppb • The phase alignment of neighbouring base stations must be within 3 μs

Exhibit 1010
IPR2024-00899, USPN 9,806,892
69 of 290

Appendix A.III

External access network back-up

(This appendix does not form an integral part of this Recommendation.)

A.III.1 External access network back-up

In many applications, some resilience to faults in the optical access network is desired, but the cost of full protection is not supportable. In these cases, a cost-effective alternative is to provide a lower capacity back-up to the service via an external access network. Examples of the external access networks include fixed wireless, mobile wireless, hybrid fibre coax networks, etc.

Because of the wide range of back-up access networks, the interface from the PON equipment to the back-up network has to be at the data frame networking layer, described in the [b-IEEE 802.1] standards. By abstracting the interface to this layer, the PON equipment need not worry about the details of the back-up network (nor does the back-up network need to worry about the PON).

The key aspect of such external back-up is the location and control of the back-up switching logic. Because of the widely disparate capacities of the primary PON and the back-up network, it does not make sense to send two copies of traffic at all times. Also, due to the packet-nature of the traffic, it is difficult for the receiver to resolve multiple copies of the same packets. It is assumed that the receiver will simply accept all packets arriving from either access network; therefore, it is important to only send one copy of any packet. Therefore, the source side must direct the traffic to the appropriate access network, and it must have the information required to make the correct choice. In addition, the source side switching equipment must also have the ability to prioritize traffic, and selectively discard traffic that exceeds the capacity of the back-up network when back-up is in force. In the upstream, the back-up switch can be located in the ONU, or beyond the UNI. In the downstream direction, the back-up switch can be located in the OLT, or beyond the SNI. These arrangements are illustrated in Figure A.III.1.

Exhibit 1010
IPR2024-00899, USPN 9,806,892
70 of 290

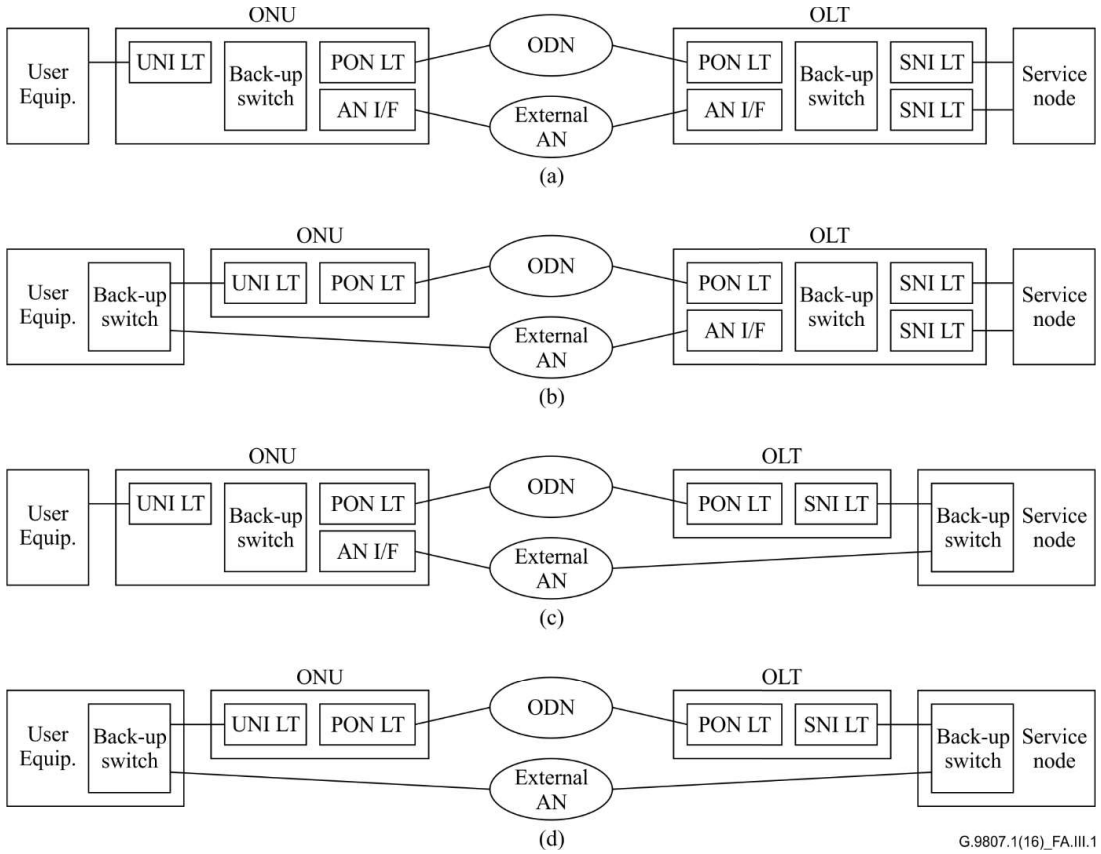

Figure A.III.1 – Four switching arrangements for external access network back-up

In option a, the switches are both located in the PON equipment. It is assumed that the PON equipment has knowledge of the PON link's operational state, and therefore it can direct traffic to the PON interface if it is working correctly and to the back-up network interface if it is not. Therefore, no additional signalling is required. The configuration of the ONU's dual access node interfaces (ANIs) must be supported in the OMCI.

In option b, the upstream switch is located beyond the ONT's UNI. A typical situation would be for this function to be located in an Ethernet switch or IP router. Therefore, that switch must be capable of learning the status of the ONU's PON link via some form of signalling. This could be as crude as the ONU deactivating the UNI when the PON link has failed, to some more sophisticated Ethernet alarm indication signal (AIS) such as the one described in [b-ITU-T Y.1731]. The downstream switch is internally controlled within the OLT.

In option c, the downstream switch is located beyond the OLT's SNI. A typical function would be for this function to be located in an Ethernet aggregation network, or in a service edge router. Just as in option b, this switching logic must be given the information on the status of the PON link to the ONT in question. Unlike the previous case, however, a sophisticated per-ONT AIS scheme must be employed, since the SNI is shared over many ONUs, some of which may not have a PON transmission problem. This could be the AIS as described in [b-ITU-T Y.1731], but applied on a per-VLAN basis. The upstream switch is internally controlled within the ONU, with the configuration of the ONU's dual ANIs being supported in the OMCI.

In option d, both of the switches are located beyond the PON equipment. This scheme is most distantly removed from the access networks, since all the back-up switching/routing is happening in

Exhibit 1010
IPR2024-00899, USPN 9,806,892
71 of 290

other equipment. This raises the possibility of allowing the back-up to occur using the more autonomous schemes such as Ethernet spanning-tree or IP routing. In either case, the back-up link would need to be configured as the 'expensive link', so that it would not be used if the PON link was available. These layer 2 or 3 schemes tend to take longer than more direct schemes mentioned in the previous options a-c. Their performance could be improved by implementing the direct AIS schemes to provide a faster feedback into their control algorithms.

Exhibit 1010
IPR2024-00899, USPN 9,806,892
72 of 290

Appendix A.IV

Operation with IEEE 1588

(This appendix does not form an integral part of this Recommendation.)

[IEEE 1588] describes a protocol for transferring time and/or frequency through a packet network. A good explanation of this can be found in the [b-ISPCS-2008] reference of clause A.7 of this document.

XGS-PON distributes the IEEE 1588 master and slave functionality between the OLT and the ONU. The OLT will perform the slave port function (or in the case of a shelf, the OLT will receive the frequency and time from the function in the shelf which performs the slave port function). The OLT synchronizes the PON line rate to the network clock frequency, and transfers the time of day information to the ONU using the method in clause C.13.2. The ONU uses the methods specified in Annex B to recover frequency and Annex C to recover time. The ONU will then either function as a master port to subsequent nodes or output the time and frequency through another interface.

Exhibit 1010
IPR2024-00899, USPN 9,806,892
73 of 290

Appendix A.V

Use cases for frequency and time of day synchronization

(This appendix does not form an integral part of this Recommendation.)

There are many applications where precise time and/or frequency must be transferred through a packet network from a source to a destination. In this appendix several use cases are described, in terms of the methods used to deliver frequency and/or time. Since most of the use cases mentioned are related to Mobile backhauling applications, examples will use the radio network controller (RNC) and Node B network elements, though these use cases are not intended to be exhaustive.

Frequency and/or time of day synchronization is provided to the OLT via either:

1) Physical timing interface (e.g., Synchronous Ethernet) (frequency only)
2) IEEE 1588 + synchronous Ethernet
3) IEEE 1588 + non- synchronous Ethernet
4) Physical time of day (ToD) interface + SyncE

Frequency and/or time of day synchronization is supplied from the ONU via either:

1) Physical timing interface (e.g., Synchronous Ethernet) (frequency only)
2) IEEE 1588 + synchronous Ethernet
3) IEEE 1588 + non- synchronous Ethernet
4) Physical ToD interface + SyncE

The use cases are described in terms of various combinations of these synchronization inputs and outputs as shown in Table A.V.1.

Table A.V.1 – XGS-PON synchronization use cases

Use case	Network synchronization to OLT	UNI synchronization from ONU
1	SyncE (frequency only)	SyncE (frequency only)
2	IEEE 1588 and SyncE	IEEE 1588 and SyncE
3	IEEE 1588	IEEE 1588
4	IEEE 1588	IEEE 1588 and SyncE
5	IEEE 1588 and SyncE	ToD interface and SyncE
6	IEEE 1588	ToD interface and SyncE
7	ToD interface and SyncE	ToD interface and SyncE

Figure A.V.1 depicts use case 1 where frequency only is transferred through the XGS-PON network. The clock interface at the OLT input and the ONU output is a physical timing interface such as synchronous Ethernet (SyncE), defined in [ITU-T G.8262]. The OLT synchronizes the PON line rate to this physical interface. The ONU outputs a physical timing interface such as synchronous Ethernet which is synchronous to the PON line rate.

Exhibit 1010
IPR2024-00899, USPN 9,806,892
74 of 290

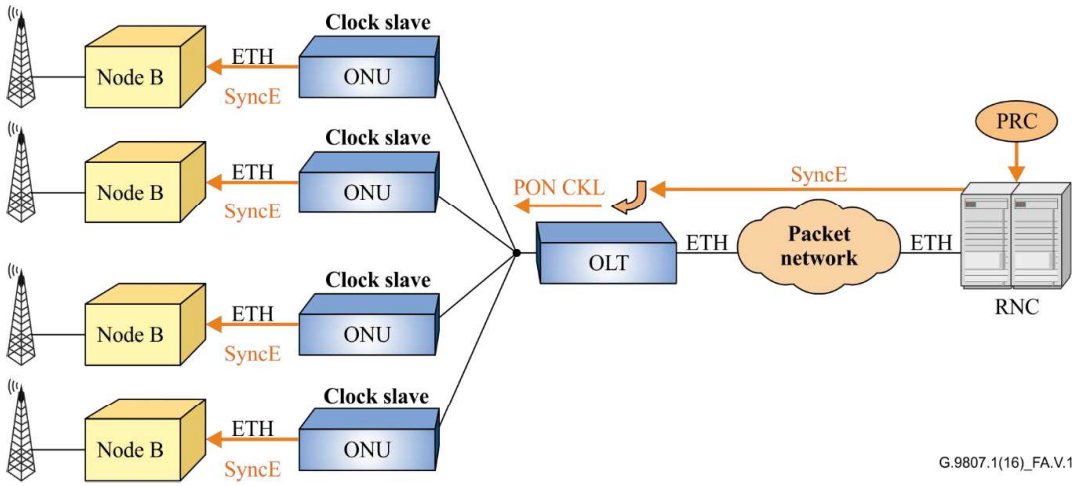

Figure A.V.1 – Using synchronous Ethernet in XGS-PON (Use case 1)

There are several use cases of interest which use [IEEE 1588] (use cases 2 through 6), with the following assumptions. The primary reference clock (PRC) provides a frequency reference. The OLT network interface is Ethernet, with the Ethernet line rate either synchronous to a network frequency reference (synchronous Ethernet) or not synchronous to a network frequency reference. The OLT obtains time of day using [IEEE 1588], usually through intervening nodes between the OLT and the PRC. The OLT synchronizes to the network frequency reference either using synchronous Ethernet, [IEEE 1588] or some other physical layer synchronous interface. The OLT transfers the time of day to the ONU using the method specified in clause C.13. The OLT transfers the network frequency reference to the ONU via its downstream line rate, which is synchronous to the network frequency reference. The ONU user interface is Ethernet, with the Ethernet line rate either synchronous to a network frequency reference (synchronous Ethernet) or not synchronous to a network frequency reference. The ONU may also have a physical time interface (e.g., 1pps).

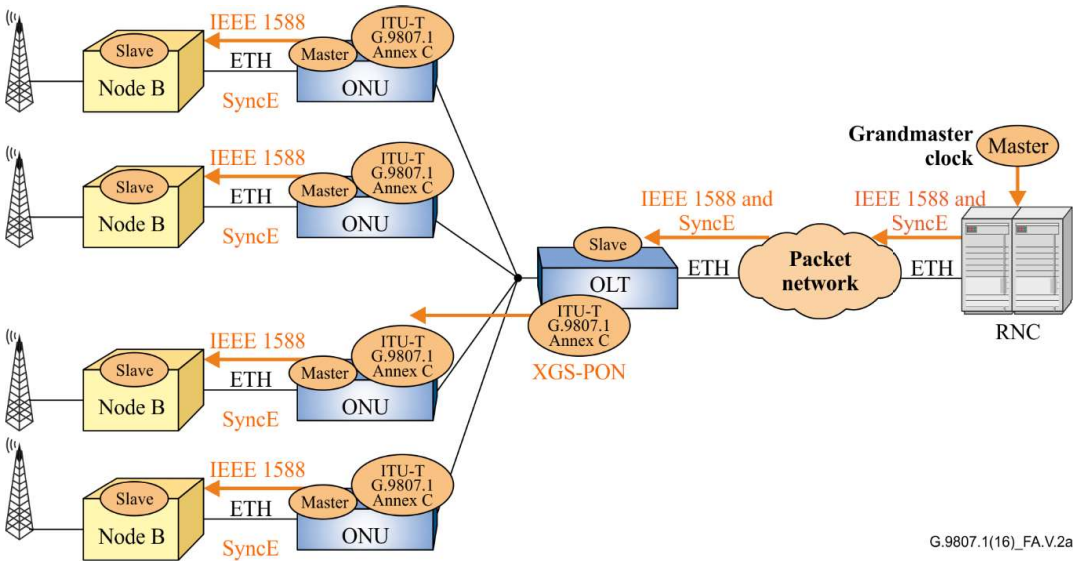

Figure A.V.2a – PTP use case 2: ONU as IEEE 1588 master, OLT as IEEE 1588 slave with SyncE at both SNI and UNI

Exhibit 1010
IPR2024-00899, USPN 9,806,892
75 of 290

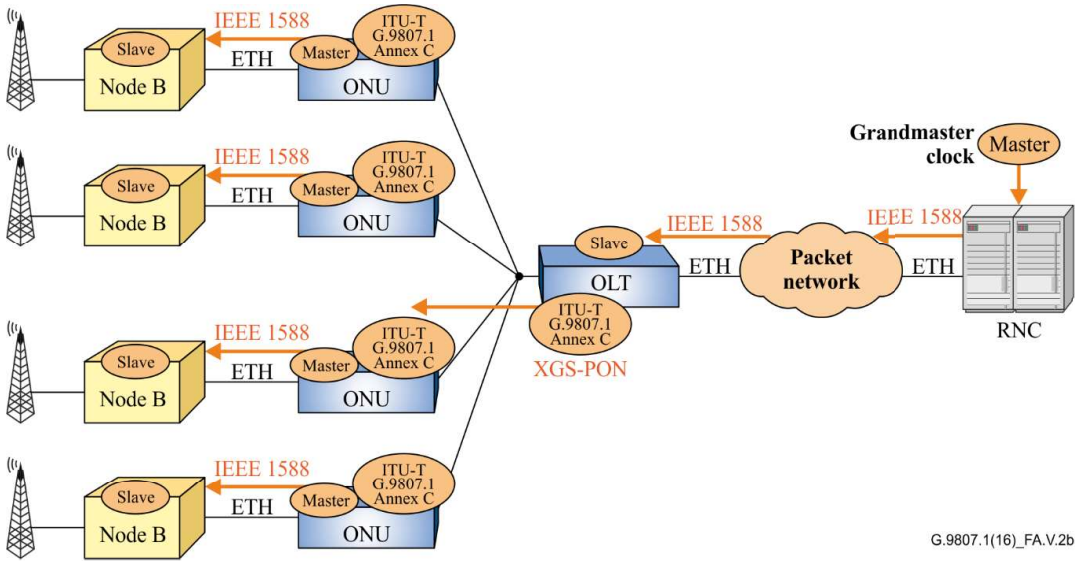

Figure A.V.2b – PTP use case 3: ONU as IEEE 1588 master, OLT as IEEE 1588 slave without SyncE

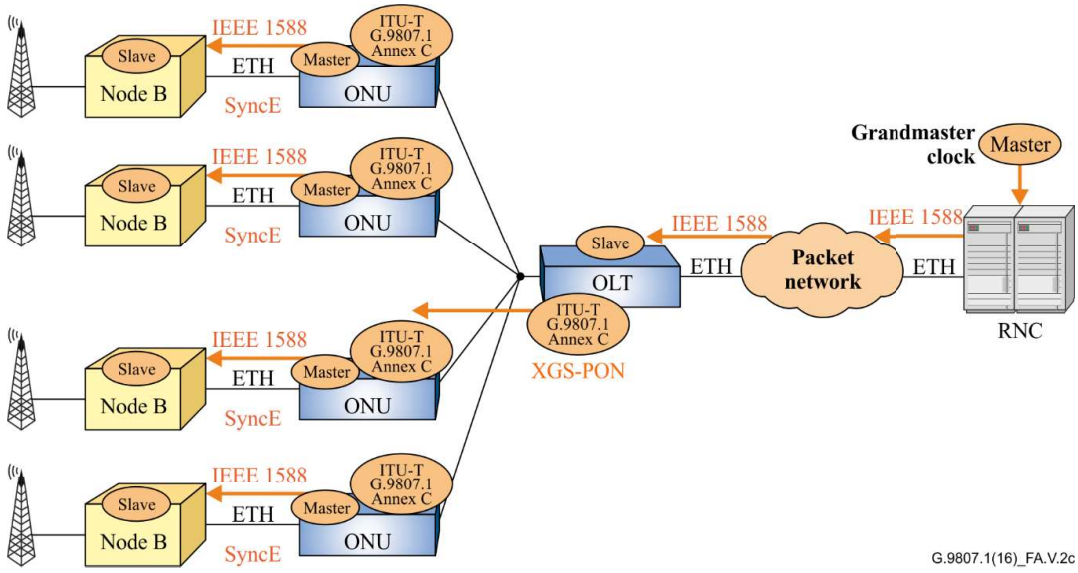

Figure A.V.2c – PTP use case 4: ONU as IEEE 1588 master, OLT as [IEEE 1588] slave, with SyncE at UNI

Figures A.V.2 (a and b) show use cases 2 and 3 for wireless backhaul. The OLT has an IEEE 1588 slave port at the SNI, which obtains the time of day from the network. This time of day is passed to the ONU as described above, and the ONU passes the time of day from an IEEE 1588 master port to the Node B. If the OLT network feed is synchronous Ethernet (use case 2), then the OLT will synchronize its downstream PON line rate to the synchronous Ethernet line rate; otherwise the OLT will synchronize its downstream PON line rate to the IEEE 1588 time of day (use cases 3). If the link between the ONU and the Node B is synchronous Ethernet (use cases 2), then the synchronous Ethernet line rate will be synchronized to the downstream PON line rate. Synchronous Ethernet ESMC messages would be used in conjunction with the synchronous Ethernet to indicate clock quality.

Exhibit 1010
IPR2024-00899, USPN 9,806,892
76 of 290

Figure A.V.3a shows use case 5, while Figure A.V.3b illustrates use case 6 for wireless backhaul. The only difference between Figure A.V.2 and Figure A.V.3 is that the ONU has a physical interface for transferring time to the Node B, such as a ToD interface. If the OLT network feed is synchronous Ethernet (use case 5), then the OLT will synchronize its downstream PON line rate to the synchronous Ethernet line rate; otherwise the OLT will synchronize its downstream PON line rate to the IEEE 1588 time of day (use cases 6).

Figure A.V.2c illustrates use case 4 where the OLT does not receive synchronous Ethernet and derives the downstream PON line rate from IEEE 1588. In this case the ESMC messages would correspond to the IEEE 1588 clock quality and not a clock quality received via ESMC at the OLT.

Figure A.V.4 shows use case 7, where a physical ToD interface is provided as an input to the OLT. The OLT processes the ToD information and sends timing information to the ONU according to the description provided in clause C.13.2. The ONU processes the received timing information and outputs the timing information using a physical ToD interface.

NOTE – The details of the physical ToD interface are for further study.

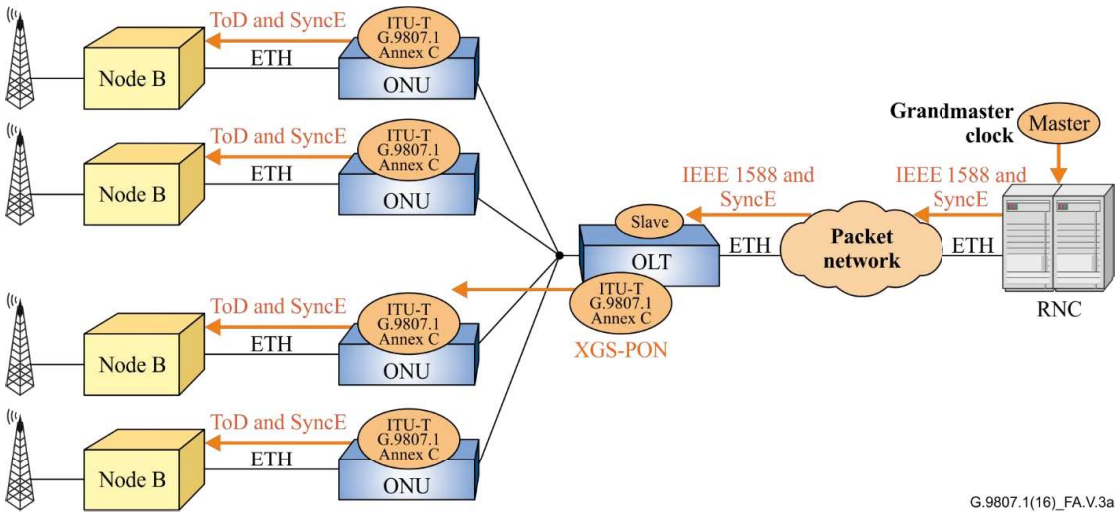

Figure A.V.3a – PTP use case 5: ONU with physical time interface, OLT as IEEE 1588 slave with SyncE at both SNI and UNI

Exhibit 1010
IPR2024-00899, USPN 9,806,892
77 of 290

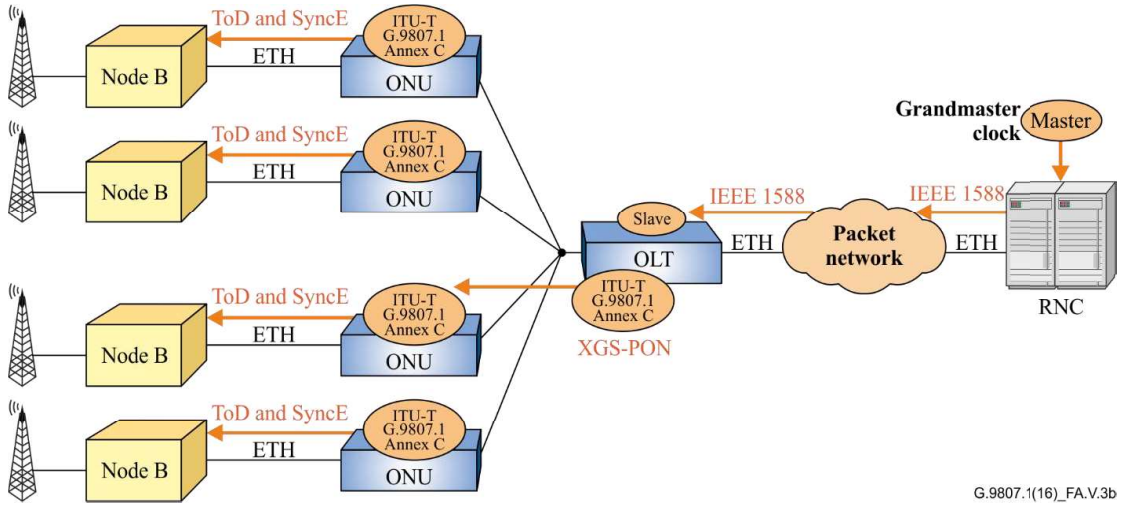

Figure A.V.3b – PTP use case 6: ONU with physical time interface, OLT as IEEE 1588 slave with SyncE at UNI only

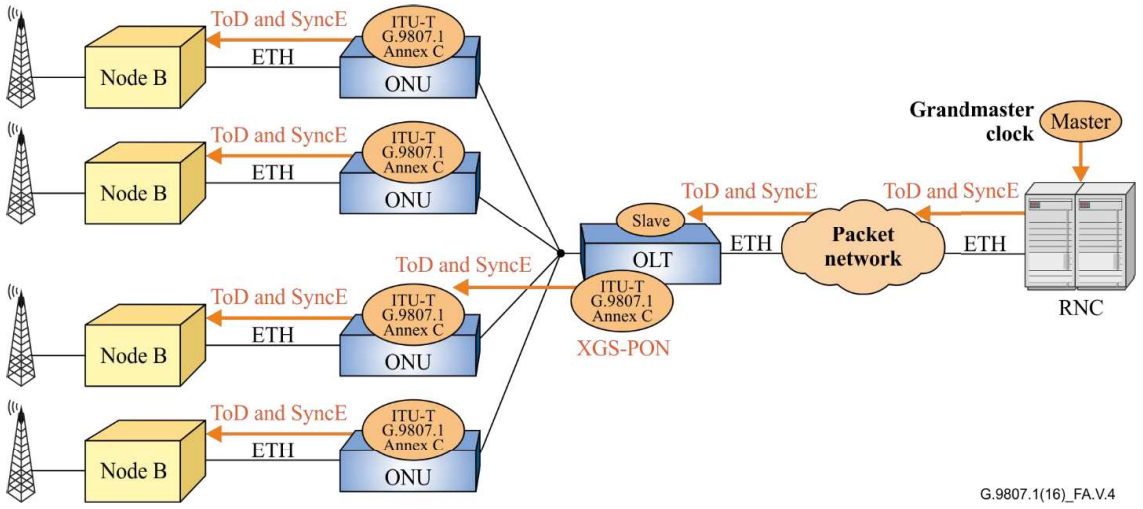

Figure A.V.4 – Use case 7, ONU and OLT with physical time interface

Exhibit 1010
IPR2024-00899, USPN 9,806,892
78 of 290

Appendix A.VI

Transport of ESMC messages over PON

(This appendix does not form an integral part of this Recommendation.)

In Appendix A.V, the use case of synchronous Ethernet over the PON was described and the Ethernet synchronization messaging channel (ESMC) was introduced. This appendix addresses frequency synchronization over XGS-PON but focuses on a recommended method to transfer the synchronization status message (SSM) carried in the ESMC (as defined in [b-ITU-T G.8264]) that are used to send the synchronous Ethernet clock quality in a one-way fashion from the clock master to a base station or other end device (refer to Figure A.V.1).

Within the physical layer, synchronous Ethernet is transferred over the OLT/ODN/ONU in the following way. A synchronous Ethernet-capable OLT will lock the XGS-PON clock to the received Ethernet clock at the OLT SNI, and a synchronous Ethernet-capable ONU will in turn lock the Ethernet clock of one or more provisioned Ethernet port UNIs ([ITU-T G.8262] defines the types of UNIs capable of synchronous Ethernet) to the XGS-PON clock.

Characteristics of the ESMC

- Simple, stateless unidirectional protocol for communicating the current reference clock quality between nodes.
- Uses the [IEEE 802.3] organization specific slow protocol (OSSP).
- Destination address is the IEEE defined Slow Protocol multicast address.
- One message type, the synchronization status message (SSM).
- Sent at approximately one message per second containing the clock quality level (QL).

ESMC messages over XGS-PON

ESMC messaging must be handled by the OLT/ONU as a system.

The main difference in how a PON must handle ESMC messages versus an Ethernet switch is that the OLT to ONU link is not a point-to-point Ethernet link but rather uses the XGS-PON point to multipoint protocol, with the ESMC messages sent via G-PON encapsulation method (GEM). While different in this respect, in all *functional* aspects the OLT and the ONU may handle ESMC messages largely as defined in [b-ITU-T G.8264].

Method for sending synchronization status messages over XGS-PON

An OLT that is synchronous Ethernet-capable should, upon configuration during initial provisioning, process and act upon ESMC messages that are received on synchronous Ethernet provisioned SNI ports.

If there are multiple provisioned synchronous Ethernet-capable ports, then the OLT should synchronize to and obtain the clock quality (QL value) from the best port using the synchronization selection methods defined in [b-ITU-T G.8264] and [b-ITU-T G.781].

The OLT should then send an OSSP ESMC message of equal clock quality minimizing additional impact on PON traffic. The OLT should not send ESMC messages unless it has been provisioned to do so.

Exhibit 1010
IPR2024-00899, USPN 9,806,892
79 of 290

ONUs may be provisioned to recognize ESMC through the normal process of configuring an incidental broadcast GEM port, the appropriate VLAN, and a bridge to the desired Ethernet UNIs. After intercept, the ONU will have obtained the clock quality which will equal to that of the ESMC received at the OLT. The ONU should then send ESMC messages that are compliant to [b-ITU-T G.8264], only from UNIs that are members of the ESMC VLAN bridge.

Exhibit 1010
IPR2024-00899, USPN 9,806,892
80 of 290

Annex B

Physical media dependent (PMD) layer specifications of XGS-PON

(This annex forms an integral part of this Recommendation.)

This annex includes comprehensive physical media dependent (PMD) layer specifications of XGS-PON.

The PMD layer of XGS-PON is largely based on [ITU-T G.987.2]. The structure and text from [ITU-T G.987.2] is retained to allow comparison with some necessary changes. Some clauses that do not apply to XGS-PON are intentionally left blank. The upstream 10 Gbit/s PMD parameters are largely based on clause 75 of [IEEE 802.3]. Specifically, a key consideration in the PMD layer specifications is the reuse, where possible, of existing optical modules (e.g., 10GBASE-PR-U3 (ONU)) from IEEE 10G-EPON [IEEE 802.3] in this application to benefit from common technology.

The major changes to the PMD layer of XGS-PON relative to [ITU-T G.987.2], in addition to the 10 Gbit/s symmetric line rate requirement, are; (a) the addition of a wavelength option (optional wavelength set) using the G-PON wavelength bands, (b) the addition of G-PON classes for optical path loss in the case of the optional wavelength set and (c) increase of the upstream physical layer overhead length.

Clauses B.1 to B.5 are intentionally left blank.

B.6 Architecture of the optical access network

See [ITU-T G.984.1]. For convenience, Figure 1 of [ITU-T G.984.2] is reproduced as Figure B.6.1.

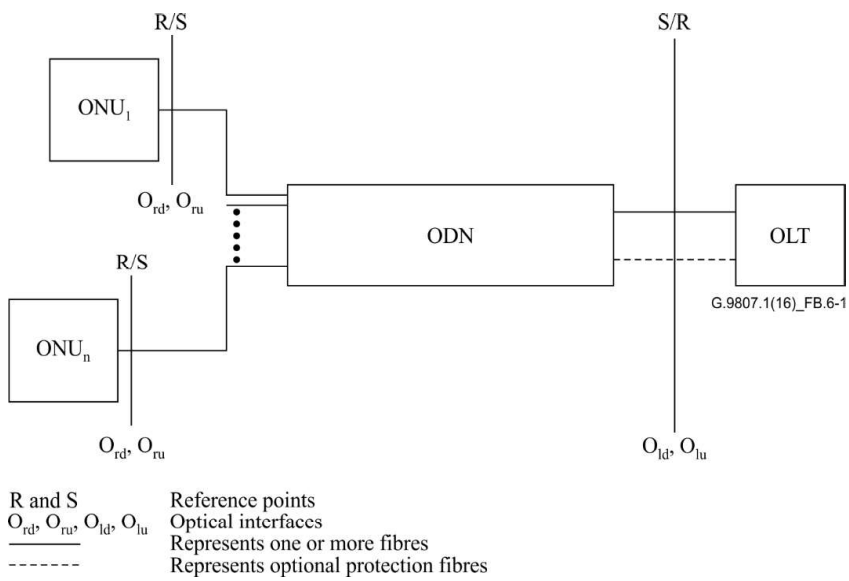

Figure B.6.1 – Generic physical configuration of the optical distribution network (reproduced from Figure 1 of [ITU-T G.984.2])

The following reference points are defined in Figure B.6.1:

S: Point on the optical fibre just after the OLT [Downstream]/ONU [Upstream] optical connection point (i.e., optical connector or optical splice).

R: Point on the optical fibre just before the ONU [Downstream]/OLT [Upstream] optical connection point (i.e., optical connector or optical splice).

Exhibit 1010
IPR2024-00899, USPN 9,806,892
81 of 290

S/R, R/S: Combination of points S and R existing simultaneously in a single fibre, when operating in bidirectional mode.

O_{ru}, O_{rd}: Optical interface at the reference point R/S between the ONU and the ODN for the upstream and downstream directions respectively.

O_{lu}, O_{ld}: Optical interfaces at the reference point S/R between the OLT and the ODN for the upstream and downstream directions respectively.

The two directions for optical transmission in the ODN are identified as follows:

– downstream direction for signals travelling from the OLT to the ONU(s), and

– upstream direction for signals travelling from the ONU(s) to the OLT.

Transmission in downstream and upstream directions takes place on the same fibre and components (duplex/diplex configuration).

B.6.1 Classes for optical path loss

Recommended classes for optical path loss are shown in Table B.6.1.

Table B.6.1 – Classes for optical path loss defined in this Recommendation

	Optional wavelength set		Basic wavelength set			
OPL class	**B+ class**	**C+ class**	**Nominal1 class (N1 class)**	**Nominal2 class (N2 class)**	**Extended1 class (E1 class)**	**Extended2 class (E2 class)**
Minimum loss	13 dB	17 dB	14 dB	16 dB	18 dB	20 dB
Maximum loss	28 dB	32 dB	29 dB	31 dB	33 dB	35 dB

Certain architectures may result in optical path losses with less than the minimum loss specified in Table B.6.1. In such a case, the ODN must contain additional optical attenuators guaranteeing minimum channel insertion loss for the given class to prevent potential damage to receivers.

B.6.2 Categories for fibre differential distance

Recommended categories for fibre differential distance (DD) are shown in Table B.6.2.

Table B.6.2 – Categories for fibre differential distance defined in this Recommendation

	DD20	**DD40**
Maximum differential distance	20 km	40 km

For DD40 ODNs, due to the intrinsic wavelength dependence of the optical fibre loss [ITU-T G.652], the fibre attenuation coefficient at the downstream wavelength (1577 nm) is lower than that at the upstream wavelength (1270 nm) resulting in a downstream loss margin. This margin is expected to be at least 1 dB for a fibre length greater than 20 km. The additional maximum optical path penalty allowed for DD40 is therefore fully compensated by the lower fibre loss at the downstream wavelength. Thus, the other PMD values (except OPP) for DD40 do not change from those PMD values specified for DD20.

In DD40 deployments, the actual fibre cable loss characteristics should be assessed, to make sure there is the required extra margin of 1 dB with respect to the maximum OPL class loss at the downstream wavelength for ODN branches with a maximum OLT-ONU fibre length greater than 20 km.

Exhibit 1010
IPR2024-00899, USPN 9,806,892
82 of 290

B.7 Services

See clause A.7.

B.8 User network interface and service node interface

See Appendix A.I.

B.9 Optical network requirements

B.9.1 Layered structure of optical network

See clause A.5.2.6.

B.9.2 Physical media dependent layer requirements for the XGS-PON

All parameters are specified as follows, and are in accordance with Table B.9.2 through Table B.9.4.

All parameter values specified are worst-case values, to be met over the range of standard operating conditions (i.e., temperature and humidity), and include ageing effects. The parameters are specified relative to an optical section design objective of a bit error ratio (BER) not worse than the values specified in Tables B.9.3 and B.9.4, for the extreme case of optical path attenuation and dispersion conditions.

In particular, the values given in Tables B.9.3 and B.9.4 are valid for the case of the basic band, as described in clause A.8.2.

B.9.2.1 Line rate

The transmission line rate is a multiple of 8 kHz. The target standardized XGS-PON system supports the following variant: XGS-PON with a downstream line rate of 9.95328 Gbit/s and an upstream line rate of 9.95328 Gbit/s.

Parameters to be defined are categorized by downstream and upstream, and the nominal line rate as shown in Table B.9.1.

Table B.9.1 – Relation between parameter categories and tables

Variant	Transmission direction	Nominal line rate [Gbit/s]	Reference table
XGS-PON	Downstream	9.95328	Table B.9.3
	Upstream	9.95328	Table B.9.4

B.9.2.1.1 Downstream accuracy

When the OLT and the end office are in their normal operating state, the OLT is typically traceable to a Stratum-1 reference (accuracy of 1×10^{-11}). When the OLT is in its free running mode, the accuracy of the downstream signal is at least that of a Stratum-4 clock (3.2×10^{-5}). OLTs intended for timing-critical applications such as mobile backhaul may require Stratum-3 quality in free-running mode

NOTE – The OLT may derive its timing from either a dedicated timing signal source or from a synchronous data interface (line timing). A packet-based timing source may also be used.

B.9.2.1.2 Upstream accuracy

When in one of its operating states and granted an allocation, the ONU shall transmit its signal with frequency accuracy equal to that of the received downstream signal.

Exhibit 1010
IPR2024-00899, USPN 9,806,892
83 of 290

B.9.2.2 FEC code selection for XGS-PON

See clause C.10.1.3.

B.9.2.3 Physical media and transmission method

B.9.2.3.1 Transmission medium

This Recommendation is based on the fibre described in [ITU-T G.652]. Other fibre types may be compatible with this Recommendation, e.g., [ITU-T G.657] fibre used for example for in-building cabling, drop section.

B.9.2.3.2 Transmission direction

The signal is transmitted both upstream and downstream through the transmission medium.

B.9.2.3.3 Transmission methodology

Bidirectional transmission is accomplished by use of wavelength division multiplexing (WDM) technique on a single fibre.

B.9.2.4 Line code

The scrambling method is defined in clause C.10.1.4.

The convention used for optical logic levels is:

– high level of light emission for a binary ONE;
– low level of light emission for a binary ZERO.

B.9.2.4.1 Downstream

Downstream line coding for XGS-PON: Scrambled non-return to zero (NRZ).

B.9.2.4.2 Upstream

Upstream line coding for XGS-PON: Scrambled NRZ.

B.9.2.5 Operating wavelength

B.9.2.5.1 Downstream wavelength allocation

The operating wavelength range for XGS-PON for the downstream direction is defined in Table B.9.3.

B.9.2.5.2 Upstream wavelength allocation

The operating wavelength range for XGS-PON for the upstream direction is defined in Table B.9.4.

B.9.2.6 XGS-PON PMD parameters

B.9.2.6.1 XGS-PON compatible ODN

XGS-PON shall operate over an ODN whose parameters are described by Table B.9.2.

Exhibit 1010
IPR2024-00899, USPN 9,806,892
84 of 290

Table B.9.2 – Physical parameters of a simple ODN (ODS)

Item	Unit	Specification
Fibre type (Note)	–	[ITU-T G.652] or compatible
Attenuation range (as defined in clause B.6.1)	dB	B+ class: 13-28 C+ class: 17-32
		N1 class: 14-29 N2 class: 16-31 E1 class: 18-33 E2 class: 20-35
Maximum fibre distance between S/R and R/S points	km	DD20: 20 DD40: 40
Minimum fibre distance between S/R and R/S points	km	0
Bidirectional transmission	–	1-fibre WDM
Maintenance wavelength	nm	[ITU-T L.66]
NOTE – See clause B.9.2.3.1		

B.9.2.6.2 Optical interface parameters of 9.95328 Gbit/s downstream direction for the basic wavelength set

Table B.9.3 – Optical interface parameters of 9.95328 Gbit/s downstream direction for the basic wavelength set

Item	Unit	Value			
OLT transmitter (optical interface Old)					
Nominal line rate	Gbit/s	9.95328			
Operating wavelength (Note 1)	nm	1 575-1 580			
Line code	–	Scrambled NRZ			
Mask of the transmitter eye diagram	–	See clause B.9.2.7.6.1			
Maximum reflectance of equipment at S/R, measured at transmitter wavelength	dB	NA			
Minimum ORL of ODN at O_{lu} and O_{ld} (Notes 2 and 3)	dB	More than 32			
ODN class		N1	N2	E1	E2
Mean launched power MIN	dBm	+2.0	+4.0	+6.0	+8.0
Mean launched power MAX	dBm	+5.0	+7.0	+9.0	+11.0
Launched optical power without input to the transmitter	dBm	NA			
Minimum extinction ratio	dB	8.2			
Transmitter tolerance to reflected optical power (Note 7)	dB	More than –15			
Dispersion range	ps/nm	0-400 (DD20) 0-800 (DD40)			
Minimum side mode suppression ratio	dB	30			

Exhibit 1010
IPR2024-00899, USPN 9,806,892
85 of 290

Table B.9.3 – Optical interface parameters of 9.95328 Gbit/s downstream direction for the basic wavelength set

Item	Unit	Value			
OLT transmitter (optical interface Old)					
Maximum differential optical path loss	dB	15			
Jitter generation	–	See clause B.9.2.9.7.3			
ONU receiver (optical interface O_{rd})					
Maximum optical path penalty (Note 6, Note 9)	dB	1.0 (DD20) 2.0 (DD40)			
Maximum reflectance of equipment at R/S, measured at receiver wavelength	dB	Less than –20			
Bit error ratio reference level	–	10-3 (Note 4)			
ODN Class		N1	N2	E1	E2
Minimum sensitivity at BER reference level (Note 5)	dBm	–28.0	–28.0	–28.0	–28.0
Minimum overload at BER reference level	dBm	–9.0	–9.0	–9.0	–9.0
Consecutive identical digit immunity	bit	more than 72			
Jitter tolerance	–	See clause B.9.2.9.7.2			
Receiver tolerance to reflected optical power (Note 8)	dB	less than 10			

NOTE 1 – In the case of outdoor OLT deployment, it is allowed for the operating wavelength to span between 1 575 – 1 581 nm.

NOTE 2 – There are optional cases where the "minimum ORL of ODN at Olu and Old" can be as low as 20 dB (see Appendix I of [ITU-T G.983.1]).

NOTE 3 – The value of ONU transceiver reflectance corresponding to the "minimum ORL of ODN at Olu and Old" is –20 dB (see Appendix II of [ITU-T G.983.1]).

NOTE 4 – See clause 9.4.1 of [ITU-T G-Sup.39] for additional details.

NOTE 5 – This sensitivity shall be met in the presence of G-PON and video overlay on the same ODN. If either G-PON, or video overlay or both of them are absent, the sensitivity may be different (precise value is for further study).

NOTE 6 – If a transmitter exhibits a higher penalty that specified, it can still comply if it equally increases the minimum launch power to compensate for extra optical path penalty (OPP), while remaining under the maximum launch power. In no case should the OPP exceed 2.5 dB.

NOTE 7 – Parameter known in [ITU-T G.984.2] as "Tolerance to the transmitter incident light power".

NOTE 8 – Parameter known in [ITU-T G.984.2] as "Tolerance to the reflected optical power".

NOTE 9 – For ODN branches with a maximum OLT-ONU fibre length greater than 20 km, the applicable maximum OPP is the DD40 value. However, the fibre loss at the downstream wavelength is lower than that at the upstream wavelength, and this more than compensates for the extra OPP of DD40 vs. DD20 (i.e., the upstream wavelength loss limits the link distance, and therefore loss margin exists for the downstream signal). For systems that connect ONUs at both short and long distances (up to 40 km) to the same OLT port, the optical link must comply with the DD20 maximum OPP value for ONUs at ≤ 20 km, and the DD40 maximum OPP value for ONUs at > 20 km.

Exhibit 1010
IPR2024-00899, USPN 9,806,892
86 of 290

B.9.2.6.3 Optical interface parameters of 9.95328 Gbit/s upstream direction for the basic wavelength set

NOTE – In addition to the requirements in Table B.9.4, when operating with XG-PON ONUs, the XGS-PON OLT receiver must conform to the requirements for the XG-PON OLT receiver while receiving bursts from the XG-PON ONUs. For details see clause 9.2.6.3 of [ITU-T G.987.2].

Table B.9.4 – Optical interface parameters of 9.95328 Gbit/s upstream direction for the basic wavelength set

Item	Unit	Value			
ONU transmitter (optical interface O_{ru})					
Nominal line rate	Gbit/s	9.95328			
Operating wavelength band	nm	1 260-1 280			
Line code	–	Scrambled NRZ			
Mask of the transmitter eye diagram	–	See clause B.9.2.7.6.2			
Maximum reflectance of equipment at R/S, measured at transmitter wavelength	dB	–10			
Minimum ORL of ODN at O_{ru} and O_{rd} (Note 1)	dB	More than 32			
ODN Class		N1	N2	E1	E2
Mean launch power minimum (at R/S) (Note 2)	dBm	+4.0	+4.0	+4.0	+4.0
Mean launch power maximum (at R/S)	dBm	+9.0	+9.0	+9.0	+9.0
Maximum transmitter enable transient time (Note 3)	bits (nsec)	1 280 (~128.6)			
Maximum transmitter disable transient time (Note 3)	bits (nsec)	1 280 (~128.6)			
Minimum extinction ratio (Note 2)	dB	6.0			
Tolerance to reflected optical power (Note 4)	dB	More than -15			
Dispersion Range (Note 7)	ps/nm	0 to –140 (DD20) 0 to –280 (DD40)			
Minimum side mode suppression ratio (Note 8)	dB	30			
Launched optical power without input to the transmitter (Note 3)	dBm	–45			
Jitter transfer	–	See clause B.9.2.9.7.1			
Jitter generation	–	See clause B.9.2.9.7.3			
OLT receiver (optical interface O_{lu})					
ODN Class		N1	N2	E1	E2
Maximum optical path penalty (DD20 and DD40)	dB	1.0	1.0	1.0	1.0
Maximum reflectance of equipment at S/R, measured at receiver wavelength	dB	-12			
Bit error ratio reference level	–	10^{-3} (Note 5)			
ODN class		N1	N2	E1	E2
Sensitivity (at S/R) (Note 6)	dBm	–26.0	–28.0	–30.0	–32.0

Exhibit 1010
IPR2024-00899, USPN 9,806,892
87 of 290

Table B.9.4 – Optical interface parameters of 9.95328 Gbit/s upstream direction for the basic wavelength set

Overload (at S/R)	dBm	–5.0	–7.0	–9.0	–11.0
Consecutive identical digit immunity	bit	72			
Jitter tolerance	–	See clause B.9.2.9.7.2			

NOTE 1 – There are optional cases where the "minimum ORL of ODN at O_{ru} and O_{rd}" can be as low as 20 dB. (See Appendix I of [ITU-T G.983.1]).

NOTE 2 – The minimum average launch power and the minimum ER are consistent with a minimum OMA of 4.78 dBm. (See Figure I.1.1 of Appendix I for details).

NOTE 3 – As defined in clause B.9.2.7.3.1. The values in nanoseconds are informative.

NOTE 4 – Parameter known in [ITU-T G.984.2] as "Tolerance to the transmitter incident light power".

NOTE 5 – See clause 9.4.1 of [ITU-T G. Sup.39] for additional details.

NOTE 6 – The sensitivity is based on ER = 6.0 dB received signal.

NOTE 7 – The maximum –20 dB width value is specified as less than 1 nm.

NOTE 8 – See Annex B.A for additional spectral requirements that limit harmful crosstalk penalties on the upstream transmissions of co-existing PON systems. Other means to facilitate coexistence are described in [b-ITU-T G.9805].

B.9.2.6.4 Optical interface parameters of 9.95328 Gbit/s downstream direction for the optional wavelength set

Table B.9.5 – Optical interface parameters of 9.95328 Gbit/s downstream direction for the optional wavelength set

Item	Unit	Value			
OLT transmitter (optical interface O_{ld})					
Nominal line rate	Gbit/s	9.95328			
Operating wavelength	nm	1 480-1 500			
Line code	–	Scrambled NRZ			
Mask of the transmitter eye diagram	–	see clause B.9.2.7.6.1			
Maximum reflectance of equipment at S/R, measured at transmitter wavelength	dB	NA			
Minimum ORL of ODN at O_{lu} and O_{ld} (Notes 1 and 2)	dB	more than 32			
OPL Class		B+		C+	
Mean launched power MIN	dBm	+2.0		+6.0	
Mean launched power MAX	dBm	+5.0		+9.0	
Launched optical power without input to the transmitter	dBm	NA			
Minimum extinction ratio	dB	8.2			
Transmitter tolerance to reflected optical power (Note 6)	dB	more than –15			
Dispersion range	ps/nm	0-300 (DD20) 0-600 (DD40)			
Minimum side mode suppression ratio	dB	30			

Exhibit 1010
IPR2024-00899, USPN 9,806,892
88 of 290

Table B.9.5 – Optical interface parameters of 9.95328 Gbit/s downstream direction for the optional wavelength set

Item	Unit	Value			
Maximum differential optical path loss	dB	15			
Jitter generation	–	see clause B.9.2.9.7.3			
ONU receiver (optical interface O_{rd})					
Maximum optical path penalty (Note 5, Note 8)	dB	1.0 (DD20) 2.0 (DD40)			
Maximum reflectance of equipment at R/S, measured at receiver wavelength	dB	less than -20			
Bit error ratio reference level	–	10^{-3} (Note 3)			
OPL Class		B+		C+	
Minimum sensitivity at BER reference level (Note 4)	dBm	−27.0		−27.0	
Minimum overload at BER reference level	dBm	−8.0		−8.0	
Consecutive identical digit immunity	bit	more than 72			
Jitter tolerance	–	See clause B.9.2.9.7.2			
Receiver tolerance to reflected optical power (Note 7)	dB	less than 10			

NOTE 1 – There are optional cases where the "minimum ORL of ODN at Olu and Old" can be as low as 20 dB (see Appendix I of [ITU-T G.983.1]).

NOTE 2 – The value of ONU transceiver reflectance corresponding to the "minimum ORL of ODN at Olu and Old" is −20 dB (see Appendix II of [ITU-T G.983.1]).

NOTE 3 – See clause 9.4.1of [b-ITU-T G-Sup.39], for additional details.

NOTE 4 – This sensitivity of XGS-PON (optional wavelength set) shall be met in the presence of XG-PON or XGS-PON (basic wavelength set) on the same ODN. If either XG-PON, XGS-PON (basic wavelength set), or both of them are absent, the sensitivity may be different (precise value is FFS).

NOTE 5 – If a transmitter exhibits a higher penalty that specified, it can still comply if it equally increases the minimum launch power to compensate for extra OPP, while remaining under the maximum launch power. In no case should the OPP exceed 2.5 dB.

NOTE 6 – Parameter known in [ITU-T G.984.2] as "Tolerance to the transmitter incident light power".

NOTE 7 – Parameter known in [ITU-T G.984.2] as "Tolerance to the reflected optical power".

NOTE 8 – For ODN branches with a maximum OLT-ONU fibre length greater than 20 km, the applicable maximum OPP is the DD40 value. However, the fibre loss at the downstream wavelength is lower than that at the upstream wavelength, and this more than compensates for the extra OPP of DD40 vs. DD20 (i.e., the upstream wavelength loss limits the link distance, and therefore loss margin exists for the downstream signal). For systems that connect ONUs at both short and long distances (up to 40 km) to the same OLT port, the optical link must comply with the DD20 maximum OPP value for ONUs at ≤ 20 km, and the DD40 maximum OPP value for ONUs at > 20 km.

Exhibit 1010
IPR2024-00899, USPN 9,806,892
89 of 290

B.9.2.6.5 Optical interface parameters of 9.95328 Gbit/s upstream direction for the optional wavelength set

Table B.9.6 – Optical interface parameters of 9.95328 Gbit/s upstream direction for the optional wavelength set

Item	Unit	Value			
ONU transmitter (optical interface O_{ru})					
Nominal line rate	Gbit/s	9.95328			
Operating wavelength band	nm	1 300-1 320			
Line code	–	Scrambled NRZ			
Mask of the transmitter eye diagram	–	see clause B.9.2.7.6.2			
Maximum reflectance of equipment at R/S, measured at transmitter wavelength	dB	−10			
Minimum ORL of ODN at O_{ru} and O_{rd} (Note 1)	dB	More than 32			
OPL class		B+		C+	
Mean launch power minimum (at R/S) (Note 2)	dBm	+3.0		+3.0	
Mean launch power maximum (at R/S)	dBm	+8.0		+8.0	
Maximum transmitter enable transient time (Note 3)	bits (ns)	1280 (~128.6)			
Maximum transmitter disable transient time (Note 3)	bits (ns)	1280 (~128.6)			
Minimum extinction ratio (Note 2)	dB	6.0			
Tolerance to reflected optical power (Note 4)	dB	More than −15			
Dispersion range	ps/nm	−50 to 40 (DD20) −100 to 80 (DD40)			
Minimum side mode suppression ratio (Note 7)	dB	30			
Launched optical power without input to the transmitter (Note 3)	dBm	−45			
Jitter transfer	–	see clause B.9.2.9.7.1			
Jitter generation	–	see clause B.9.2.9.7.3			
OLT receiver (optical interface O_{lu})					
OPL class		B+		C+	
Maximum optical path penalty (DD20 and DD40)	dB	1.0		1.0	
Maximum reflectance of equipment at S/R, measured at receiver wavelength	dB	−12			
Bit error ratio reference level	–	10^{-3} (Note 5)			
OPL class		B+		C+	
Sensitivity (at S/R) (Note 6)	dBm	−26.0		−30.0	
Overload (at S/R)	dBm	−5.0		−9.0	
Consecutive identical digit immunity	bit	72			
Jitter tolerance	–	see clause B.9.2.9.7.2			

Exhibit 1010
IPR2024-00899, USPN 9,806,892
90 of 290

Table B.9.6 – Optical interface parameters of 9.95328 Gbit/s upstream direction for the optional wavelength set

Item	Unit	Value
NOTE 1 – There are optional cases where the "minimum ORL of ODN at Oruand Ord" can be as low as 20 dB (see) Appendix I of [ITU-T G.983.1]. NOTE 2 – The minimum average launch power and the minimum ER are consistent with a minimum OMA 4.78 dBm (see Figure I.1.1 for details). NOTE 3 – As defined in clause B.9.2.7.3.1. The values in nanoseconds are informative. NOTE 4 – Parameter known in [ITU-T G.984.2] as "Tolerance to the transmitter incident light power". NOTE 5 – See clause 9.4.1 of [b-ITU-T G-Sup.39] for additional details. NOTE 6 – The sensitivity is based on ER = 6.0 dB received signal. NOTE 7 – See Annex B.A for additional spectral requirements that limit harmful crosstalk penalties on the upstream transmissions of co-existing PON systems. Other means to facilitate coexistence are described in [b-ITU-T G.9805].		

B.9.2.7 Transmitter at O_{ld} and O_{ru}

All parameters are specified as follows, and are in accordance with Tables B.9.3 and B.9.4.

B.9.2.7.1 Source type

Considering the attenuation/dispersion characteristics of the target fibre channel, feasible transmitter devices include only single-longitudinal mode (SLM) lasers. The indication of a nominal source type in this Recommendation is not a requirement though it is also expected that only SLM lasers meet all the distance and line rate requirements of the XGS-PON systems both for the downstream and upstream links.

The use of multi-longitudinal mode (MLM) lasers is not contemplated in this Recommendation, due to their practical distance/line-rate limitations.

B.9.2.7.2 Spectral characteristics

For SLM lasers, the laser is specified as its fibre dispersion range, the range over which the laser characteristics and fibre dispersion result in a defined penalty at a specified fibre distance, under standard operating conditions. Additionally, for control of mode partition noise in SLM systems, a minimum value for the laser side-mode suppression ratio is specified. The actual spectral characteristics are limited by the maximum amount of optical path penalty (OPP) produced with the worst-case optical dispersion in the data channel.

The use of MLM lasers is not contemplated in this Recommendation.

B.9.2.7.3 Mean launched power

The mean launched power at the optical interfaces O_{ld} and O_{ru} is the average power of a pseudo-random data sequence coupled into the fibre by the transmitter. It is given as a range to allow for some cost optimization and to cover all allowances for operation under standard operating conditions, transmitter connector degradation, measurement tolerances, and ageing effects.

In the operating state, the lower figure is the minimum power to be provided and the higher one is the power never to be exceeded.

NOTE – Measurement of the launched power at the O_{ru} optical interface must take into account the bursty nature of the upstream traffic transmitted by the ONUs.

Exhibit 1010
IPR2024-00899, USPN 9,806,892
91 of 290

B.9.2.7.3.1 Launched optical power without input to the transmitter

In the upstream direction, the ONU transmitter should ideally launch no power into the fibre in all bursts which are not assigned to that ONU. However, an optical power level less than or equal to the launched power without input to the transmitter is allowed during bursts which are not assigned to that ONU. During the Tx enable bit period the transmit levels are not specified, provided they comply with the PMD Tables B.9.3 and B.9.4. During the Tx disable bit period immediately following the assigned burst, the maximum launch power level allowed is the zero-level corresponding to the minimum extinction ratio specified in Tables B.9.3 and B.9.4.

The specification of the maximum number of Tx Enable and Tx Disable bit periods is provided in Tables B.9.3 and B.9.4.

The relationship between ONU power levels and burst times is shown in Figure B.9.1.

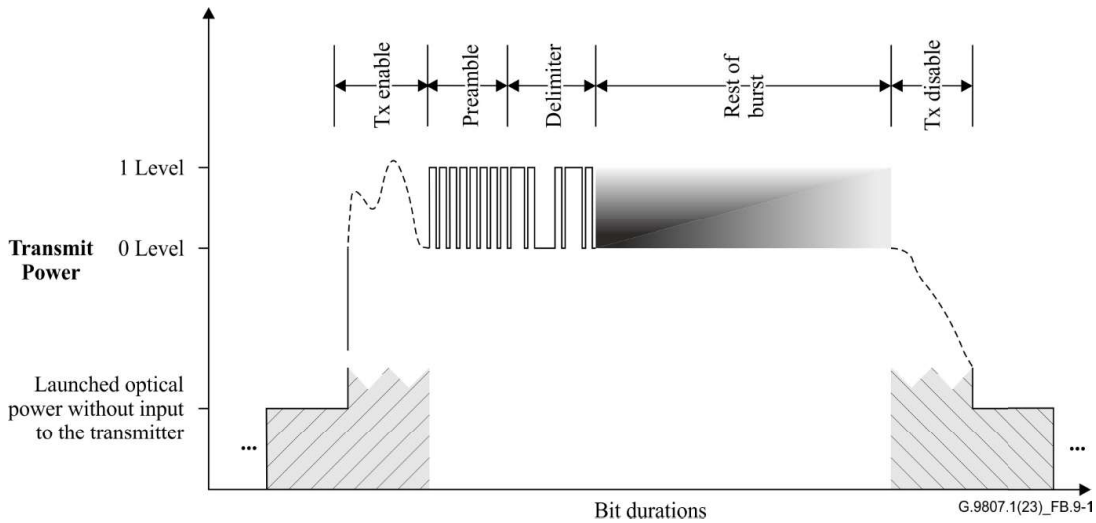

Figure B.9.1 – Relationship between ONU power levels and burst times

B.9.2.7.4 Minimum extinction ratio

The extinction ratio (ER) is defined as:

$$ER = 10 \log_{10} (A/B)$$

where A is the average optical power level at the centre of the binary 1 and B is the average optical power level at the centre of the binary 0.

The extinction ratio for the upstream direction burst mode signal is applied from the first bit of the preamble to the last bit of the burst signal, inclusive.

B.9.2.7.5 Maximum reflectance of equipment, measured at transmitter wavelength

Reflections from equipment (ONU/OLT) back to the cable plant are specified by the maximum permissible reflectance of equipment measured at O_{ld}/O_{ru}, in accordance with Tables B.9.3 and B.9.4.

B.9.2.7.6 Mask of transmitter eye diagram

In this Recommendation, general transmitter pulse shape characteristics including rise time, fall time, pulse overshoot, pulse undershoot and ringing, all of which should be controlled to prevent excessive degradation of the receiver sensitivity, are specified in the form of a mask of the transmitter eye diagram at O_{ld}/O_{ru}. For the purpose of assessing the transmit signal, it is important to consider not only the eye opening, but also the overshoot and undershoot limitations.

Exhibit 1010
IPR2024-00899, USPN 9,806,892
92 of 290

B.9.2.7.6.1 OLT transmitter

The parameters specifying the mask of the eye diagram (see Figure B.9.2) for the OLT transmitter are shown in Table B.9.5. The test set-up for the measurement of the mask of the eye diagram is shown in Figure B.9.3.

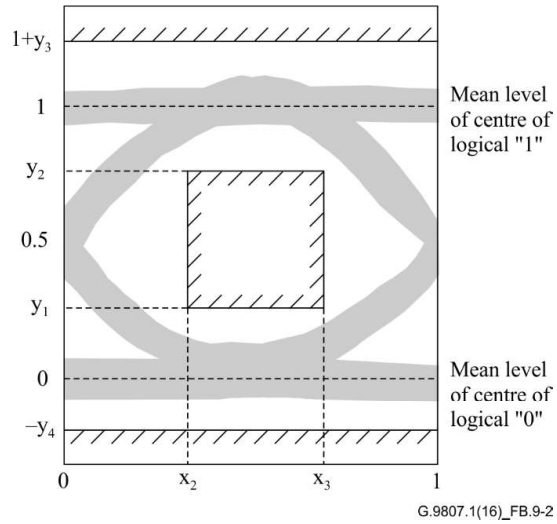

Figure B.9.2 – Mask of the eye diagram for OLT transmitter

Table B.9.5 – Mask of the eye diagram for OLT transmitter – Numeric values

	9.95328 Gbit/s
x_3-x_2 (Note 1)	0.2
y_1	0.25
y_2	0.75
y_3	0.25
y_4	0.25
NOTE 1 – x_2 and x3 of the rectangular eye mask need not be equidistant with respect to the vertical axes at 0 UI and 1 UI. NOTE 2 – The values are taken from clause 7.2.2.14 of [ITU-T G.959.1].	

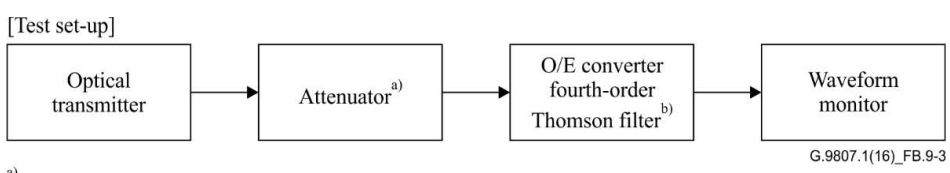

a) Attenuator is used if necessary.
b) Cut-off frequency (3 dB attenuation frequency) of the filter is 0.75 times output nominal bit rate.

Figure B.9.3 – Test set-up for mask of the eye diagram for OLT transmitter

B.9.2.7.6.2 ONU transmitter

The parameters specifying the mask of the eye diagram (see Figure B.9.4) for the ONU transmitter are shown in Table B.9.6. The test set-up for the measurement of the mask of the eye diagram is shown in Figure B.9.5.

Exhibit 1010
IPR2024-00899, USPN 9,806,892
93 of 290

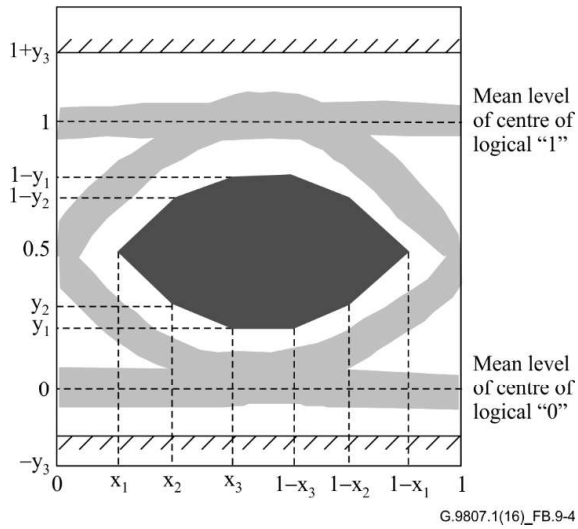

Figure B.9.4 – Mask of the eye diagram for ONU transmitter

Table B.9.6 – Mask of the eye diagram for ONU transmitter – Numeric values

	9.95328 Gbit/s
x_1	0.25
x_2	0.4
x_3	0.45
y_1	0.25
y_2	0.28
y_3	0.4
Max hit ratio	5×10^{-5}
NOTE – The values are taken from clause 7.2.2.14 of [ITU-T G.959.1], "NRZ 10G Ratio small.". The "Hit ratio" is the acceptable ratio of samples inside to outside the hatched area.	

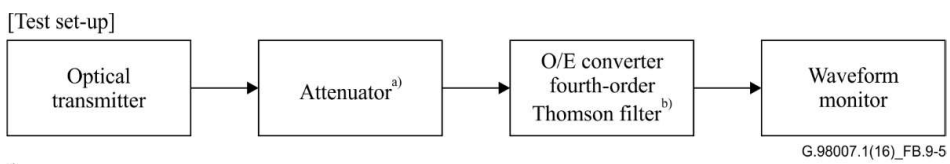

a) Attenuator is used if necessary.
b) Cut-off frequency (3 dB attenuation frequency) of the filter is 0.75 times output nominal bit rate.

Figure B.9.5 – Test set-up for mask of the eye diagram for ONU transmitter

The mask of the eye diagram for the upstream direction burst mode signal is applied from the first bit of the preamble to the last bit of the burst signal, inclusive.

B.9.2.7.7 Transmitter tolerance to reflected optical power

The specified transmitter performance must be met in the presence of the optical reflection level at reference point S specified in Tables B.9.3 and B.9.4.

Exhibit 1010
IPR2024-00899, USPN 9,806,892
94 of 290

B.9.2.8 Optical path between O_{ld}/O_{ru} and O_{rd}/O_{lu}

B.9.2.8.1 Attenuation range

Six classes of attenuation ranges are specified in clause B.6.1.

Attenuation specifications are assumed to be worst-case values at all wavelengths specified in Tables B.9.3 and B.9.4 including losses due to splices, connectors, optical attenuators (if used) or other passive optical devices, and any additional cable margin to cover allowances for:

1) future modifications to the cable configuration (additional splices, increased cable lengths, etc.);
2) fibre cable performance variations due to environmental factors; and
3) degradation of any connector, optical attenuators (if used) or other passive optical devices between points S and R, when provided.

B.9.2.8.2 Minimum optical return loss of the cable plant at point R/S, including any connectors

Overall minimum optical return loss (ORL) specification at point R/S in the ODN is specified in Tables B.9.3 and B.9.4.

Optionally, minimum ORL specification at point R/S in the ODN is specified in Note 2 of Tables B.9.3 and B.9.4.

NOTE – The overall reflectance at the S/R point for an ODN model is dominated by the optical connectors at the optical distribution frame (ODF). The maximum reflectance of a single discrete element within [ITU-T G.982] is –35 dB. The reflectance from the two ODF connectors leads to a figure of –32 dB. However, based on another network model, the overall reflectance may become worse than –20 dB.

B.9.2.8.3 Maximum discrete reflectance between points S and R

All discrete reflectances in the ODN shall be better than –35 dB as defined in [ITU-T G.982].

B.9.2.8.4 Dispersion

Systems considered limited by dispersion have the maximum values of dispersion (ps/nm) specified in Tables B.9.3 and B.9.4. These values are consistent with the maximum optical path penalties specified. They take into account the specified transmitter type and the fibre dispersion coefficient over the operating wavelength range.

B.9.2.9 Receiver at O_{rd} and O_{lu}

All parameters are specified as follows, in accordance with Tables B.9.3 and B.9.4.

B.9.2.9.1 Receiver sensitivity

Receiver sensitivity is defined in [ITU-T G.987]. The values are specified in Tables B.9.3 and B.9.4. Receiver sensitivity takes into account power penalties caused by the use of a transmitter under standard operating conditions with specified values of extinction ratio and worst-case values of pulse rise and fall times, optical return loss at point R/S, receiver connector degradation and measurement tolerances. The receiver sensitivity does not include power penalties associated with dispersion, jitter or reflections from the optical path; these effects are specified separately in the allocation of maximum optical path penalty.

B.9.2.9.2 Receiver overload

Receiver overload is defined in [ITU-T G.987]. The values are specified in Tables B.9.3 and B.9.4, accordingly. The receiver should have a certain robustness against increased optical power level due to start-up or potential collisions during ranging, for which the BER, specified in Tables B.9.3 and B.9.4, is not guaranteed.

Exhibit 1010
IPR2024-00899, USPN 9,806,892
95 of 290

B.9.2.9.3 Maximum optical path penalty

Optical path penalty is defined in [ITU-T G.987]. The receiver is required to tolerate an optical path penalty not exceeding the value specified in Tables B.9.3 and B.9.4.

B.9.2.9.4 Maximum reflectance at R/S, measured at receiver wavelength

Reflections from equipment (ONU/OLT) back to the cable plant are specified by the maximum permissible reflectance of equipment measured at optical interfaces O_{rd} and O_{lu}. It shall be in accordance with Tables B.9.3 and B.9.4.

B.9.2.9.5 Differential optical path loss

Differential optical path loss means the optical path loss difference between the highest and lowest optical path loss in the same ODN. The maximum differential optical path loss is defined in Tables B.9.3 and B.9.4.

B.9.2.9.6 Clock extraction capability

NOTE – The clock of the upstream transmission signal is extracted rapidly from several alternating bits in the preamble. The clock extracted from the preamble is maintained at least during reception of the signal from the delimiter through the end of the upstream assigned burst, or is continuously extracted from the signal after the preamble during reception of the assigned burst.

B.9.2.9.7 Jitter performance

This clause deals with jitter requirements for optical interfaces of XGS-PON.

B.9.2.9.7.1 Jitter transfer

The jitter transfer specification applies only to the ONU.

The jitter transfer function is defined as:

$$jitter\ transfer = 20\log_{10}\left[\frac{jitter\ on\ upstream\ signal\ UI}{jitter\ on\ downstream\ signal\ UI} \times \frac{down\ stream\ bit\ rate}{upstream\ bit\ rate}\right]$$

The jitter transfer function of an ONU shall be under the curve given in Figure B.9.6, when input sinusoidal jitter up to the mask level in Figure B.9.7 is applied, with the parameters specified in this figure for each line rate. Figure B.9.8 illustrates jitter tolerance mask.

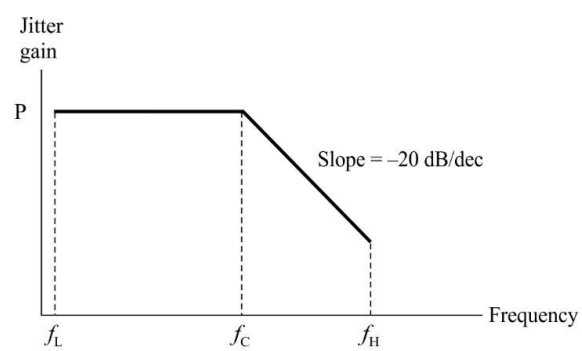

Upstream line rate (Gbit/s)	f_L (kHz)	f_C (kHz)	f_H (kHz)	P (dB)
9.95328	10	1000	80'000	0.1
NOTE – These values are taken from [ITU-T G.783]				

G.9807.1(16)_FB.9-6

Figure B.9.6 – Jitter transfer for ONU

Exhibit 1010
IPR2024-00899, USPN 9,806,892
96 of 290

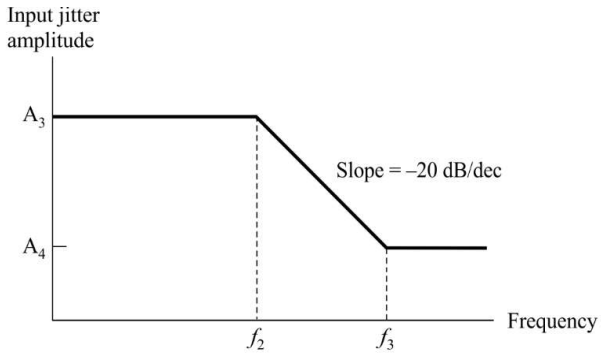

Downstream line rate (Gbit/s)	A_3 (UI)	A_4 (UI)	f_2 (kHz)	f_3 (kHz)
9.95328	1.5	0.15	400	4000
NOTE – These values are taken from [ITU-T G.783]				

G.9807.1(16)_FB.9-7

Figure B.9.7 – High-band portion of sinusoidal jitter mask for jitter transfer

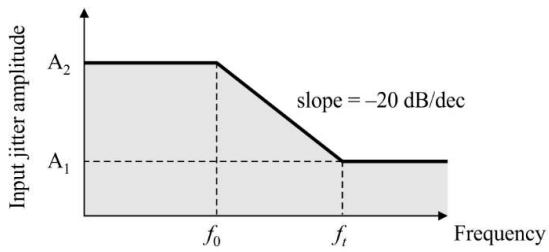

Line rate (Gbit/s)	f_t [kHz]	f_0 [kHz]	A_1 [UIp-p]	A_2 [UIp-p]
9.95328	4000	400	0.075	0.75
NOTE – These values are scaled to 9.95328 Gbit/s from the values in [ITU-T G.984.2]				

G.9807.1(16)_FB.9-8

Figure B.9.8 – Jitter tolerance mask

B.9.2.9.7.2 Jitter tolerance

Jitter tolerance is defined as the peak-to-peak amplitude of sinusoidal jitter applied on the input XGS-PON signal that causes a 1-dB optical power penalty at the optical equipment. Note that it is a stress test to ensure that no additional penalty is incurred under operating conditions.

The ONU shall tolerate, as a minimum, the input jitter applied according to the mask in Figure B.9.8, with the parameters specified in that figure for the downstream line rate. The OLT should tolerate, as a minimum, the input jitter applied according to the mask in Figure B.9.8, with the parameters specified in that figure for the upstream line rate. The jitter tolerance specification for the OLT is informative as it can only be measured in a setting that permits continuous operation of the upstream.

B.9.2.9.7.3 Jitter generation

An ONU shall not generate a peak-to-peak jitter amplitude more than shown in Table B.9.7 at a line rate of 9.95328 Gbit/s, with no jitter applied to the downstream input and with a measurement bandwidth as specified in Table B.9.7. An OLT shall not generate a peak-to-peak jitter amplitude more than shown in Table B.9.7 at a line rate of 9.95328 Gbit/s, with no jitter applied to its timing reference input and with a measurement bandwidth as specified in Table B.9.7.

Exhibit 1010
IPR2024-00899, USPN 9,806,892
97 of 290

Table B.9.7 – Jitter generation requirements for XGS-PON

Line rate (Gbit/s)	Measurement band (−3 dB frequencies) (Note 1)		Peak-to-peak amplitude (UI) (Note 2)
	High-pass (kHz)	Low-pass (MHz) –60 dB/dec	
9.95328	20	80	0.30
	4 000	80	0.10

NOTE 1 – The high-pass and low-pass measurement filter transfer functions are defined in clause 5 of [ITU-T G.825].
NOTE 2 – The measurement time and pass/fail criteria are defined in clause 5 of [ITU-T G.825].
NOTE 3 – This table comes from [ITU-T G.783].

B.9.2.9.8 Consecutive identical digit (CID) immunity

The OLT and the ONU shall have a CID immunity as specified in the series of Tables B.9.3 and B.9.4.

B.9.2.9.9 Receiver tolerance to reflected power

The receiver tolerance to reflected power is the allowable ratio of optical input average power of O_{rd} and O_{lu} to reflected optical average power when multiple reflections are regarded as a noise light at the optical interfaces O_{rd} and O_{lu} respectively.

The receiver tolerance to reflected power is defined at minimum receiver sensitivity.

B.9.2.9.10 Transmission quality and error performance

To avoid system down time or failures, the frame structure should be robust in the presence of transmission BER up to the values defined in Tables B.9.3 and B.9.4.

The average BER on individual links across the entire PON system will typically be lower than the values defined in Tables B.9.3 and B.9.4. Optical components should provide BER better than the values defined in Tables B.9.3 and B.9.4 when conditions allow.

B.10 X/S tolerance masks

B.10.1 X/S tolerance mask for ONU

The minimum optical sensitivity of a XGS-PON ONU must be met in the presence of interference signals. Interference signals are caused by other services such as G-PON and/or video signals in the enhancement band specified in clause 5.2.2 of [ITU-T G.987.1]. To minimize the effect of interference signals, XGS-PON ONUs need to isolate them using an appropriate wavelength blocking filter (WBF) and WDM filter. This Recommendation does not specify the isolation characteristics of the WBF and WDM filters directly, but specifies the X/S tolerance of the XGS-PON ONU. Here, S is the optical power of the XGS-PON signal, and X is that of the interference signal(s). Both are measured at the ONU reference point R/S, corresponding to the ONU reference point $IF_{XGS\text{-}PON}$ specified in clause A.5.2.1.

The interference signal format for measuring X/S tolerance is a NRZ pseudo-random code with the same line rate as the XGS-PON downstream signal or a lower line rate within the bandwidth of the XGS-PON receiver.

This tolerance can be used to design a variety of WDM configurations at the ONU. It makes no definite assumption about additional services using the enhancement band specified in [ITU-T G.987.1]. This clause specifies the X/S tolerance mask that should not cause the XGS-PON

Exhibit 1010
IPR2024-00899, USPN 9,806,892
98 of 290

receiver to fail to meet its sensitivity requirements. Implementers need to specify the isolation characteristics of the WBF and WDM filters to obtain enough isolation of the interference signal(s). This allows the XGS-PON sensitivity requirement to be met in the presence of this level of interference.

For the basic wavelength set, the wavelengths and total optical launch power of additional services must fall beneath the mask of Figure B.10.1 to allow coexistence with XGS-PON.

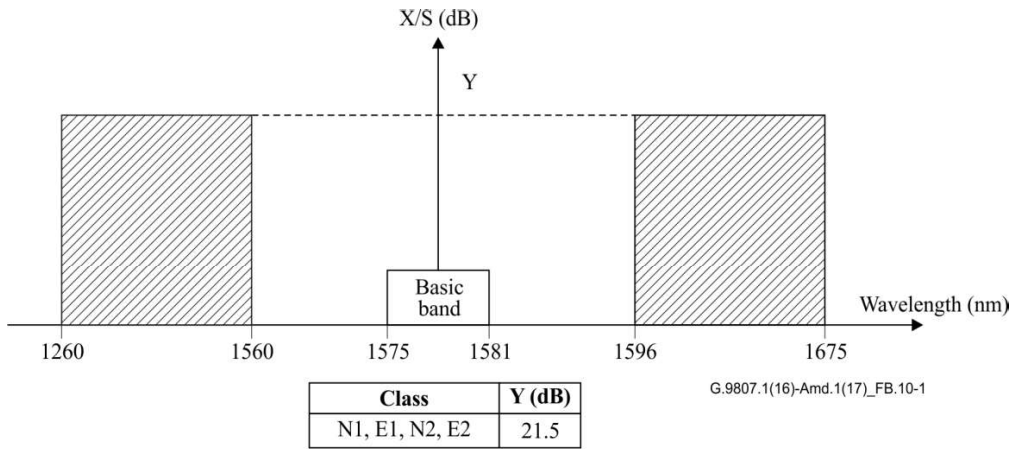

Class	Y (dB)
N1, E1, N2, E2	21.5

S: Received power of basic band.
X: Maximum total power of additional services received in the blocking wavelength range.
X/S: In the mask (hatching area) should not cause the XGS-PON receiver to fail to meet its sensitivity requirements.

Figure B.10.1 – X/S tolerance mask for basic wavelength set ONU (Versatile WDM configuration)

For the optional wavelength set, the wavelengths and total optical launch power of additional services must fall beneath the mask of Figure B.10.2 to allow coexistence with XSG-PON.

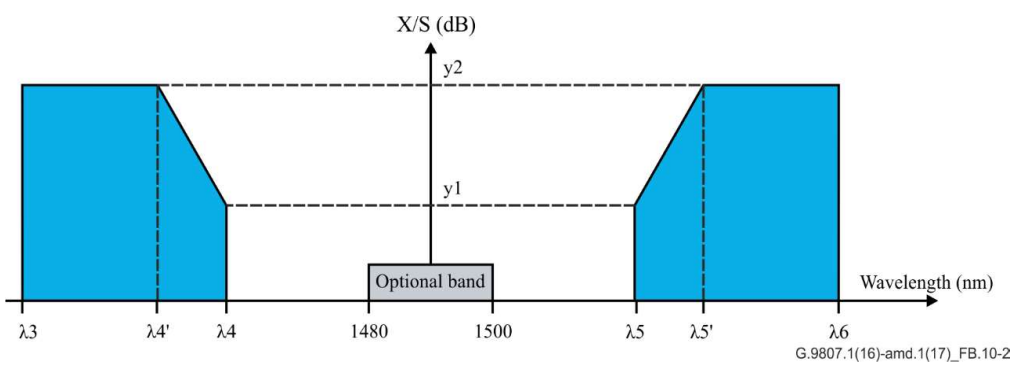

Class	Y1 (dB)	Y2 (dB)
B+,C+	7	21.5

Wavelength (nm)	λ3	λ4'	λ4	λ5	λ5'	λ6'
	1260	1441	1450	1524	1539	1675

S: Received power of basic band.
X: Maximum total power of additional services received in the blocking wavelength range.
X/S: In the mask (hatching area) should not cause the XGS-PON receiver to fail to meet its sensitivity requirements.

Figure B.10.2 – X/S tolerance mask for optional wavelength set ONU (Versatile WDM configuration)

Exhibit 1010
IPR2024-00899, USPN 9,806,892
99 of 290

B.10.2 X/S tolerance mask for OLT

X/S tolerance mask definition of XGS-PON OLT is used to enable a variety of WDM implementations at the OLT. This clause specifies the X/S tolerance mask that should ensure the XGS-PON OLT receiver will not fail to meet its sensitivity requirements in the presence of co-existing PON signals. This is an optional requirement for an XGS-PON OLT but, in order to facilitate smooth evolution to higher speed PON and alleviate the high isolation requirement of coexistence elements (CEx), it is recommended the necessary wavelength blocking filter be implemented. To ensure X/S compliance, implementers need to design the combined isolation characteristics of the WBF and WDM filters to obtain enough overall isolation of the signals in the blocking wavelength range. This allows the XGS-PON OLT sensitivity requirement to be met in the presence of this level of interference.

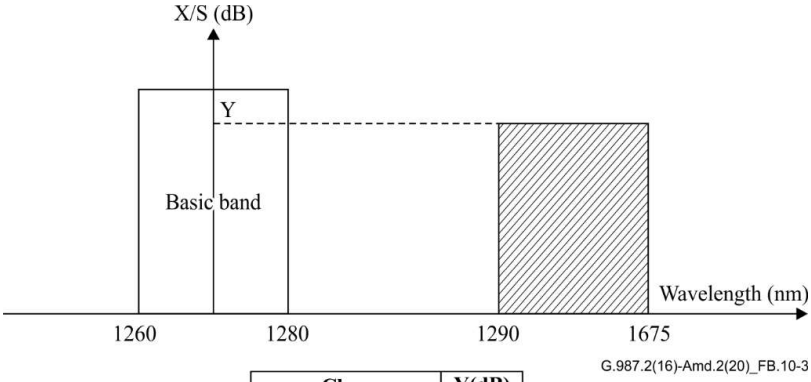

Class	Y(dB)
N1, N2, E1, E2	–5

S: Received power of basic band.
X: Maximum total power of additional services received in the blocking wavelength range.
X/S: In the mask (hatching area) should not cause the XGS-PON receiver to fail to meet its sensitivity requirements.

Figure B.10.3 – X/S tolerance mask for XGS-PON OLT (Basic Band)

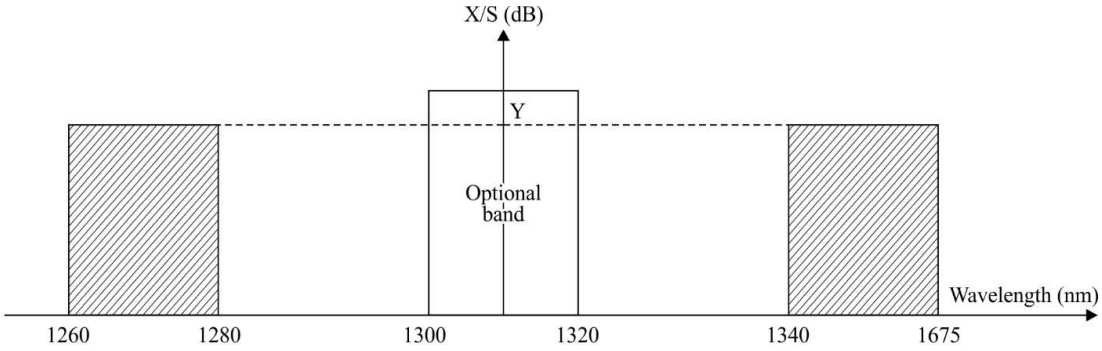

Class	Y(dB)
N1, N2, E1, E2	–5

Figure B.10.4 – X/S tolerance mask for XGS-PON OLT (Optional band)

S: Received power of optional band.
X: Maximum total power of additional services received in the blocking wavelength range.
X/S: In the mask (hatching area) should not cause the XGS-PON receiver to fail to meet its sensitivity requirements

Exhibit 1010
IPR2024-00899, USPN 9,806,892
100 of 290

B.11 Upstream physical layer overhead

The XGS-PON frame structure is described in Annex C, which is devoted to the specification of the TC layer. However, upstream bursts must be preceded by suitable physical layer overhead, which is used to accommodate several physical processes. Table B.11.1 shows the length of the physical layer overhead for the upstream line rate specified in this Recommendation.

Table B.11.1 – XGS-PON upstream physical layer overhead

Upstream line rate	Overhead bits
9.95328 Gbit/s	2 048

Moreover, Appendix B.III provides information on the physical processes that have to be performed during the physical layer overhead (Tplo) time, and some guidelines for an optimum use of Tplo.

Exhibit 1010
IPR2024-00899, USPN 9,806,892
101 of 290

Annex B.A

ONU out-of-band power spectral density

(This annex forms an integral part of this Recommendation.)

The purpose of this annex is to specify a set of additional requirements on the ONU transmitter which should be applied in multi-system co-existence deployments. These requirements are stricter than those in the base text of this Recommendation.

The requirements specified in this annex are optional. Implementations of this Recommendation should not be assumed to meet the requirements of this annex. If the implementer declares the support of this annex, the implementation shall meet all the requirements specified herein.

Co-existence with other PON systems (e.g., ITU-T G.984.x Series, ITU-T G.989.x Series, ITU-T G.9804.3, etc.) on the same ODN is a frequent requirement for PON system deployments. In such cases, light from ONU transmitters from one PON type may fall into the upstream operating wavelength band of a co-existing system. If the optical power of this out-of-band (OOB) light is too high, then this may cause harmful crosstalk penalties on the upstream transmissions of the co-existing PON systems. Such problems are exacerbated in PON ODNs where the differential loss is high such that the victim ONU is on a higher optical loss path and the interfering ONU is on a lower loss path.

To ensure successful operation in PON co-existence use cases, the Out-of-band power spectral density (OOB-PSD) must be below a certain level. The OOB-PSD mask for the ONU transmitter at the R/S interface is shown in Figure B.A.1 and the values are given in the Table B.A.1 and Table B.A.2. To meet with the mask requirement, the ONU PSD remains below the dashed mask line under all operating conditions. The in-band power limit (Y) is the maximum ONU launch power and the points at the ONU operating band edge (Y-SMSR) represent the power limit given by the ONU transmitter side-mode-suppression ratio (SMSR). The out-of-band PSD (X) is the power outside of the ONU operating wavelength band that may fall into co-existing PON upstream operating wavelength bands. The OOB-PSD spectral interval is 0.1 nm according to the industry convention for optical signal to noise measurement.

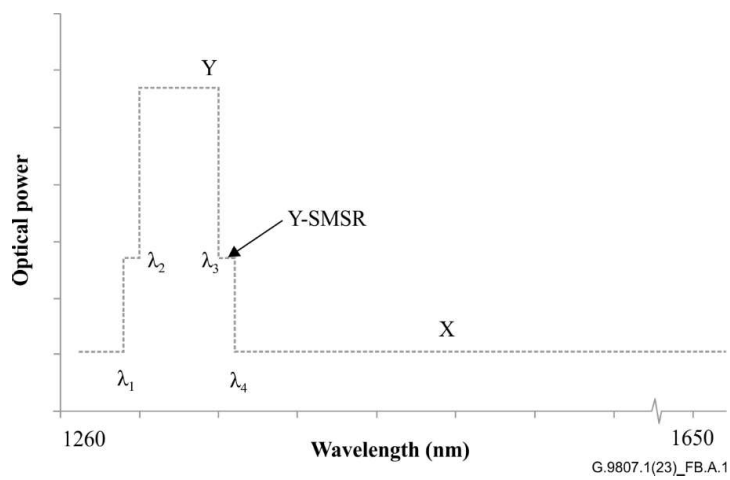

Figure B.A.1 – ONU Transmitter OOB-PSD Mask Definition

Exhibit 1010
IPR2024-00899, USPN 9,806,892
102 of 290

Table B.A.1 – ONU OOB-PSD mask wavelengths

Wavelength	Basic wavelength set (nm)	Optional wavelength set (nm)
λ_1	Not applicable	1290
λ_2	1260	1300
λ_3	1280	1320
λ_4	1284	1330

Table B.A.2 – ONU OOB-PSD mask values

Mask range	PSD (dBm measured in 0.1 nm)	
	Basic wavelength set	Optional wavelength set
1260 nm $\leq \lambda < \lambda_1$	Not applicable	X= −41.5 dBm
$\lambda_1 \leq \lambda < \lambda_2$	Y-SMSR	Y-SMSR
$\lambda_2 \leq \lambda \leq \lambda_3$	Y	Y
$\lambda_3 < \lambda \leq \lambda_4$	Y-SMSR	Y-SMSR
$\lambda_4 < \lambda \leq$ 1650 nm	X= −41.5 dBm	X= −41.5 dBm

Y= Mean launch power maximum as given in the ONU PMD parameter tables

SMSR= Minimum side mode suppression ratio as given in the ONU PMD parameter tables

NOTE – The OOB-PSD mask specification must be met under the full range of ODN conditions including reflections, as specified elsewhere in this Recommendation.

The mask wavelengths define the boundaries of measurement ranges. The entire 0.1 nm measurement interval should lie inside a single range.

Exhibit 1010
IPR2024-00899, USPN 9,806,892
103 of 290

Appendix B.I

Examples of wavelength allocation for XGS-PON, G-PON and video distribution services

(This appendix does not form an integral part of this Recommendation.)

See clause A.5.2.2 and Appendix II of [ITU-T G.984.5] for a generic consideration of wavelength allocation for XGS-PON, G-PON and video distribution services.

Exhibit 1010
IPR2024-00899, USPN 9,806,892
104 of 290

Appendix B.II

Physical layer measurements required to support optical layer supervision

(This appendix does not form an integral part of this Recommendation.)

B.II.1 Introduction

This appendix describes physical layer parameter measurements that are required to provide the XGS-PON system with a basic optical layer supervision capability. The quantities to be measured are enumerated, along with the desired range, accuracy and resolution. These measurements can be obtained by different practical and cost-effective monitoring methods, and the method of measurement is left to implementation choice.

B.II.2 Transceiver parameters monitoring

In PON systems, physical monitoring for OLS may be used for:

1) Normal status monitoring: Get and buffer 'historic' data as a reference in a normally working system.
2) Degradation detection: Find the potential faults before they become service-affecting, and identify the source of the problem (e.g., ODN, OLT or ONT).
3) Fault management: Detect, localize and diagnose faults.

In order to achieve these objectives, the following performance items should be monitored in a PON system.

– Transceiver temperature (OLT and ONT);
– Transceiver voltage (OLT and ONT);
– Laser bias current (OLT and ONT);
– OLT transmit power;
– OLT receive power (per ONT);
– ONT transmit power;
– ONT receive power.

Clause B.II.3 specifies recommended measurement performance parameters for each of these transceiver performance measurements.

NOTE – These are obtainable using currently available detecting and monitoring technology.

B.II.3 Measurement table for transceiver parameters

Table B.II.1 provides information on the standard measurement performance that should be obtainable with measurement equipment embedded in the OLT and/or ONTs.

NOTE – The values specified in this table pertain to the measurement, and not the reporting, of data. Therefore, the resolution mainly refers to the intrinsic quantization size of the measurement circuit, and not the message field format of the report. The typical response time refers to the timeliness of the measurement circuit in the optical module, and not to the actual reporting of data over the PON or to the EMS.

Exhibit 1010
IPR2024-00899, USPN 9,806,892
105 of 290

Table B.II.1 – Optical line supervision-related measurement specifications

	Typical range (Note 1)	Resolution	Accuracy	Repeatability	Typical response time
Temperature – OLT and ONT	–45º to +90º C	0.25º C	±6º C	±1º C	1 s
Voltage – OLT and ONT (Note 4)	0 to 6.55 V	0.5% of nominal	±3% of nominal	±1% of nominal	1 s
Bias current – OLT and ONT (Note 4)	0 to 819 mA	1% of nominal	±10% of nominal	±5% of nominal	1 s
ONT transmit power	–28 to +20 dBm	0.1 dB	±3 dB	±0.5 dB (Note 2)	300 ns
ONT receive power	–53 to –4.9 dBm	0.1 dB	±3 dB (Note 5)	±0.5 dB (Notes 2, 6)	300 ns
OLT transmit power	–28 to +20 dBm	0.1 dB	±2 dB	±0.5 dB (Note 2)	300 ns
OLT receive power (Note 3)	–32 to –4.9 dBm	0.1 dB	±2 dB (Note 5)	±0.5 dB (Notes 2, 6)	300 ns

NOTE 1 – The typical range attempts to capture the most common range of parameters of an operational optical module. If a module has a different operational range, then the measurement range follows that range, augmented by the measurement inaccuracy on either end.

NOTE 2 – ONT and OLT optical repeatability refers to multiple measurements taken when the true values of the ONT or OLT temperature and voltage are the same at the time of measurement. However, the normal range of those parameters is exercised in between tests as a means to gauge their aging effects.

NOTE 3 – The OLT's measurement reflects the average power received during a burst. This requires the OLT to perform the measurement at the proper time with respect to the incoming burst, and that said burst is long enough to support the response time of the detector. The deviation due to non-50% duty cycle in the upstream data pattern is not to be charged against the measurement accuracy or repeatability specifications.

NOTE 4 – Nominal refers to the design value of the quantity being measured (i.e., voltage or bias current) for the particular device implementation.

NOTE 5 – Absolute accuracy is ±3 dB down to −35 dBm received optical power, and ±5 dB beyond –35 dBm.

NOTE 6 – Repeatability < 0.5 dB down to −35 dBm optical power over 1-10 second measurement time.

B.II.4 OLS physical layer performance measurements requirements

All the above parameters should be monitored continuously in real time in order to reflect the actual quality of physical links and operational status of optical modules. Moreover, the monitoring process should not significantly degrade the normal service transmissions.

Exhibit 1010
IPR2024-00899, USPN 9,806,892
106 of 290

Appendix B.III

Allocation of the physical layer overhead time

(This appendix does not form an integral part of this Recommendation.)

The physical layer overhead time (Tplo) is used to accommodate five physical processes in the PON. These are: laser on/off time, timing drift tolerance, level recovery, clock recovery and start of burst delimitation. The exact division of the physical layer time to all these functions is determined partly by constraint equations, and partly by implementation choices. This appendix reviews the constraints that the OLT must comply with, and suggests values for the discretionary values.

Tplo can be divided into three sections with respect to what ONU data pattern is desired. For simplicity, these times can be referred to as the guard time (Tg), the preamble time (Tp) and the delimiter time (Td). During Tg, the ONU transmit levels are not specified, provided they comply with the PMD Tables B.9.3 and B.9.4. During the Tx disable bit period immediately following the assigned burst, the maximum launch power level allowed is the zero-level corresponding to the minimum extinction ratio specified in Tables B.9.3 and B.9.4. During Tp, the ONU will transmit a preamble pattern that provides the desired transition density and signal pattern for fast level and clock recovery functions. Lastly, during Td, the ONU will transmit a special data pattern with optimal autocorrelation properties that enable the OLT to find the beginning of the burst. Table B.III.2 gives recommended values for Tg, Tp, Td and Tplo. Figure B.III.1 shows the timing relationship between the various physical layer overhead times.

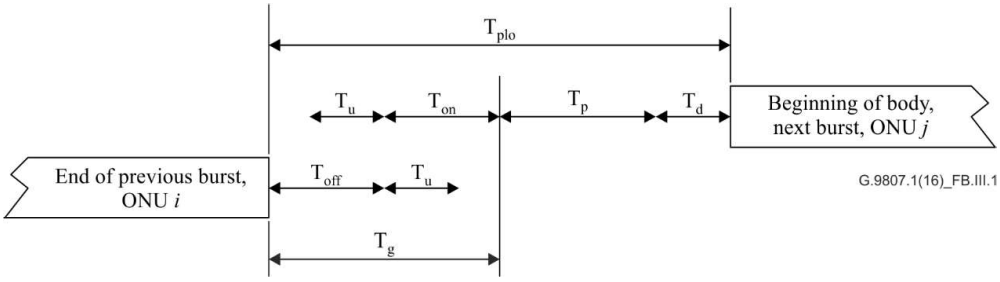

Figure B.III.1 – Timing relationship between the various physical layer overhead times

An additional parameter of the control logic on the PON is the total peak-to-peak timing uncertainty (Tu). This uncertainty arises from variations of the time of flight caused by the fibre and component variations with temperature and other environmental factors.

The constraint conditions with which the OLT must comply are then:

$$Tg > Ton + Tu, \text{and}$$

$$Tg > Toff + Tu$$

These conditions can be explained as follows. The first condition makes sure that the following burst's laser on ramp-up does not fall on top of the last burst's data. The second condition makes sure that the last burst's laser off tail-off does not fall on top of the following burst's preamble.

Tp must be sufficient for the physical layer to recover the signal level (essentially, setting the decision threshold) and the signal clock phase. There are many diverse design approaches to these two problems, each with its own benefits and costs. Some designs are very fast, but require an external trigger signal and produce sub-optimal error performance. Other designs are slower, but do not require a reset signal and produce bit errors that are normally distributed. In addition, each of these designs may have special requirements on the data pattern used for the preamble. Some designs prefer

Exhibit 1010
IPR2024-00899, USPN 9,806,892
107 of 290

a maximum transition density pattern, while others prefer a pattern with a balance of transitions and controlled runs of identical digits.

Since the design is up to the OLT implementer, the OLT gets to configure the details of the preamble that is transmitted by the ONU. This is part of the burst profile discussion below.

Td must be long enough to provide a robust delimiter function in the face of bit errors. The error resistance of the delimiter depends on the exact implementation of the pattern correlator, but a simple approximate relationship between the number of bits in the delimiter (N) and the number of bit errors tolerated (E) is as expressed in Equation B.III-1:

$$E = \mathrm{int}(N/4) - 1 \qquad \text{(B.III-1)}$$

Equation B.III-1 has been empirically verified by a numerical search of all delimiters of sizes ranging from 8 to 32 bits. This search was performed under the assumption that the preamble pattern was a '1010' repeating pattern, and that the delimiter had an equal number of zeroes and ones. The Hamming distance, D, of the best delimiter from all shifted patterns of itself and the preamble was found to be D = int(N/2) – 1; yielding the error tolerance shown.

Given a certain bit error ratio (BER), the probability of a severely errored burst (Pseb) is given by:

$$Pseb = \binom{N}{E+1} BER^{E+1} \qquad \text{(B.III-2)}$$

Substituting Equation B.III-1 into Equation B.III-2, the resultant Pseb is given by Equation B.III-3:

$$Pseb = \binom{N}{\mathrm{int}(N/4)} BER^{\mathrm{int}(N/4)} \qquad \text{(B.III-3)}$$

If the BER equals 10^{-4}, the resultant Pseb for various delimiter lengths, N, is given in Table B.III.1. Inspection of this table shows that, in order to effectively suppress this kind of error, the delimiter length must be at least 16 bits long. The choice of delimiter length and pattern is made by the OLT as part of the burst profile.

Table B.III.1 – Probability of a severely errored burst as a function of delimiter length

N	Pseb
8	2.8×10^{-7}
12	2.2×10^{-10}
16	1.8×10^{-13}
20	1.5×10^{-16}
24	1.3×10^{-19}
32	1.1×10^{-25}
64	4.9×10^{-50}

With these considerations taken into account, the worst case and objective allocations of the physical layer overhead are given in Table B.III.2. Table B.III.2 also lists the values for the ONU Tx enable time and Tx disable time, and the total physical layer overhead time for reference. The worst-case values are intended to provide a reasonable bound for easy implementation, and the objective values are intended to be the design target for more efficient implementation with optimized components. These values are for a simple ODN without reach extenders. Reach extenders may require their own guard and preamble time allowances, making the total overhead larger. The values in nanoseconds are for information only.

Exhibit 1010
IPR2024-00899, USPN 9,806,892
108 of 290

Table B.III.2 – Recommended allocation of burst mode overhead time for XGS-PON OLT functions

	Tx enable	Tx disable	Total time	Guard time	Preamble time	Delimiter time
Worst-case in bit times (ns)	1 280 (128.6)	1 280 (128.6)	8 192 (823.1)	2 048 (205.8)	6 080 (610.9)	64 (6.4)
Objective in bit times (ns)	256 (25.7)	256 (25.7)	2 048 (205.8)	512 (51.4)	1 280 (128.6)	32 (3.2)

In addition to the design dependent aspects of the burst overhead, there can be operationally dependent factors. For example, detecting an ONU's ranging burst is a more difficult problem than receiving an ONU's regular transmission. For another example, some ONUs may have higher power and be easier to detect, and therefore do not need FEC. For these reasons, the OLT may request different burst parameters depending on the context.

The concept of a burst profile captures all the aspects of burst overhead control. A burst profile specifies the preamble pattern and length, the delimiter pattern and length, and whether FEC parity should be sent. The OLT establishes one or more burst profiles, and then requests a particular burst profile for each burst transmission.

The OLT has considerable latitude in setting up the profiles, because the OLT's burst receiver is sensitive to the profile parameters. Therefore, the OLT should use profiles that ensure adequate response in its burst mode receiver. However, some basic requirements from the ONU side must be met. Namely, the preamble and delimiter patterns should be balanced and they should have a reasonable transition density. If not, the ONU transmitter driver circuitry may be adversely affected. Also note that the preamble and delimiter patterns could differ in each profile, and this difference could be used by the OLT receiver as an in-band indication of the format of each burst (e.g., FEC active or not).

The details of distributing the burst profiles and signalling their use are described in Annex C, the XGS-PON TC layer.

Exhibit 1010
IPR2024-00899, USPN 9,806,892
109 of 290

Appendix B.IV

Jitter budget specifications

(This appendix does not form an integral part of this Recommendation.)

B.IV.1 The concept of jitter budget

Figure B.IV.1 illustrates the overall concept of the jitter specification and shows the place of the jitter budget.

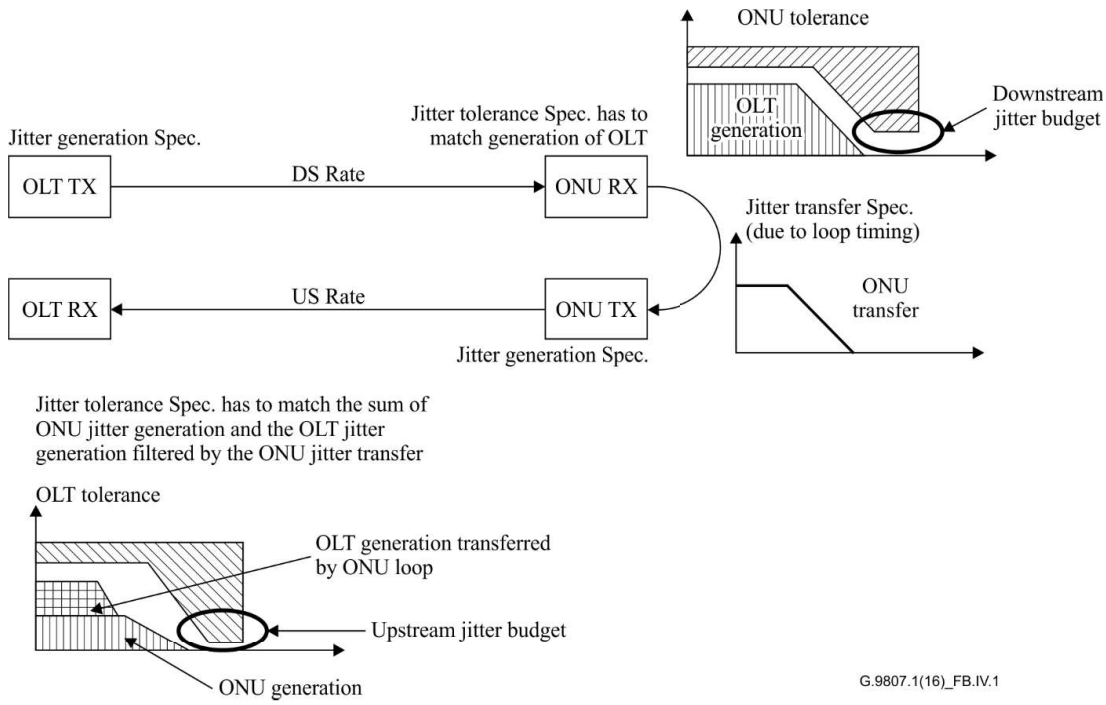

Figure B.IV.1 – The place of the jitter budget in the overall jitter specification

The jitter budget specifies jitter components that are not covered by the low frequency jitter specifications. All jitter components accounted for in the jitter budget are integrated over the frequency domain that starts from the upper corner frequency (f_t) of the jitter tolerance mask (see clause B.9.2.9.7.2).

The jitter budget is based on the dual Gaussian jitter model. In this model, the jitter components are classified into deterministic jitter (DJ) and random jitter (RJ). The DJ components are modelled as a bimodal distribution and the RJ components as a Gaussian distribution. In addition, the duty-cycle distortion (DCD), which is a DC component, is included into the DJ specification of the jitter budget. The basic assumptions of the model are as follows:

1) jitter is represented assuming the DJ has an equi-probable bimodal distribution and the RJ has a Gaussian distribution;

2) all sources of random jitter are assumed independent; therefore RJ RMS values can be added by squares;

3) all sources of DJ are assumed to be correlated (this is a worst-case assumption, meaning that all DJ components are either together at maximum value or together at minimum value, with equal probability for the minimum and the maximum to occur).

Exhibit 1010
IPR2024-00899, USPN 9,806,892
110 of 290

Under these assumptions, the total jitter is defined at each given BER by:

$$TJ_{@\mathrm{BER}} = DJ + RJ_{RMS} \cdot 2 \cdot Q^{-1}(BER)$$

where Q^{-1}(BER) is the inverse of the Q function. For a very rigorous definition of jitter methodologies, refer to [b-ISO/IEC MJSQ].

B.IV.2 Definition of test points

In order to build a consistent jitter budget, test points need to be defined at which the jitter components are to be measured. It is important to notice that between the optical module and the SERDES component (whether it is a stand-alone component connected to the MAC through a parallel interface or whether it is integrated inside the MAC ASIC) there is a non-negligible electrical channel.

The test points of the jitter budget are defined in Figure B.IV.2 and Table B.IV.1.

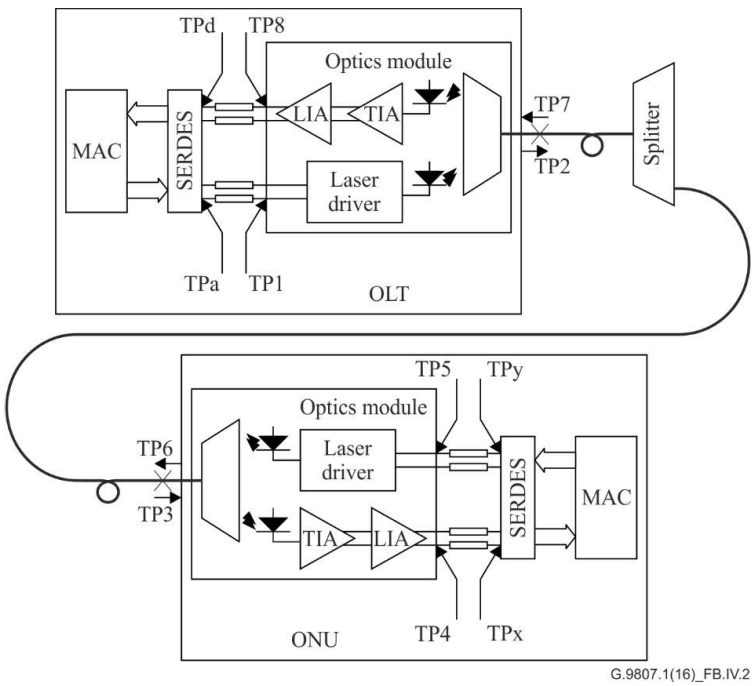

Figure B.IV.2 – Test points of the jitter budget

Table B.IV.1 – Description of test points for jitter budget

Test point	Description
TPa	Electrical test point at the TX output pins of OLT SERDES
TP1	Electrical test point at the TX input pins of OLT optical module
TP2	Optical test point at output of OLT (downstream)
TP3	Optical test point at input of ONU (downstream)
TP4	Electrical test point at the RX output pins of ONU optical module
TPx	Electrical test point at the RX input pins of ONU SERDES
Tpy	Electrical test point at the TX output pins of ONU SERDES
TP5	Electrical test point at the TX input pins of ONU optical module
TP6	Optical test point at output of ONU (upstream)

Exhibit 1010
IPR2024-00899, USPN 9,806,892
111 of 290

Table B.IV.1 – Description of test points for jitter budget

Test point	Description
TP7	Optical test point at input of OLT (upstream)
TP8	Electrical test point at the RX output pins of OLT optical module
TPd	Electrical test point at the RX input pins of OLT SERDES

B.IV.3 Jitter budget specification for XGS-PON

The proposed values of the jitter components at the different test points are presented in Table B.IV.2.

All jitter values are indicated as peak-to-peak values at the BER that corresponds to the respective test point. Jitter at all test points except TP4, TPx, TP8 and TPd is defined at BER=10^{-12}, which is the target BER of the system and also the default BER used by the test instruments. RJ at receiver is calculated at a power level equal to the sum of the minimum sensitivity and the maximum OPP, as defined in Table B.9.3 for the downstream direction and Table B.9.4 for the upstream direction. Jitter at TP4 and TPx is defined at BER=10^{-3}, and jitter at TP8 and TPd is defined at BER=10^{-4}, since the system relies on FEC to reach the system target BER.

Table B.IV.2 – Jitter budget for XGS-PON

Downstream jitter budget				
Test point	**DJ [Uipp]**	**RJ [Uipp]**	**TJ [Uipp]**	**BER**
Tpa	0.10	0.14	0.24	10^{-12}
TP1	0.12	0.14	0.26	
TP2	0.21	0.18	0.38	
TP3	0.26	0.18	0.43	
TP4	0.41	0.27	0.67	10^{-3}
TPx	0.50	0.27	0.77	
Upstream jitter budget				
Test point	**DJ [Uipp]**	**RJ [Uipp]**	**TJ [Uipp]**	**BER**
Tpy	FFS	FFS	FFS	10^{-2}
TP5	0.12	0.16	0.28	
TP6	0.30	0.21	0.51	
TP7	0.35	0.21	0.56	
TP8	FFS	FFS	FFS	10^{-3}
TPd	0.53	0.23	0.76	
NOTE – Jitter measurements should be performed at nominal operating conditions.				

B.IV.4 Jitter measurements for compliance to budget

A set-up that can be used to measure the jitter components at the test points defined in Table B.IV.1 and verify their compliance to the values given in Table B.IV.2 is illustrated in Figure B.IV.3.

The set-up contains an OLT and an ONU. The ONU is configured to transmit in continuous mode and a PRBS31 pattern is recommended.

Exhibit 1010
IPR2024-00899, USPN 9,806,892
112 of 290

If measurement of jitter at optical test-points is required, optical splitters have to be added to the set-up to permit connection of the O2E probe. If the measurement is to include the dispersion from the optical fibre, then a 20 km spool has to be added to the set-up.

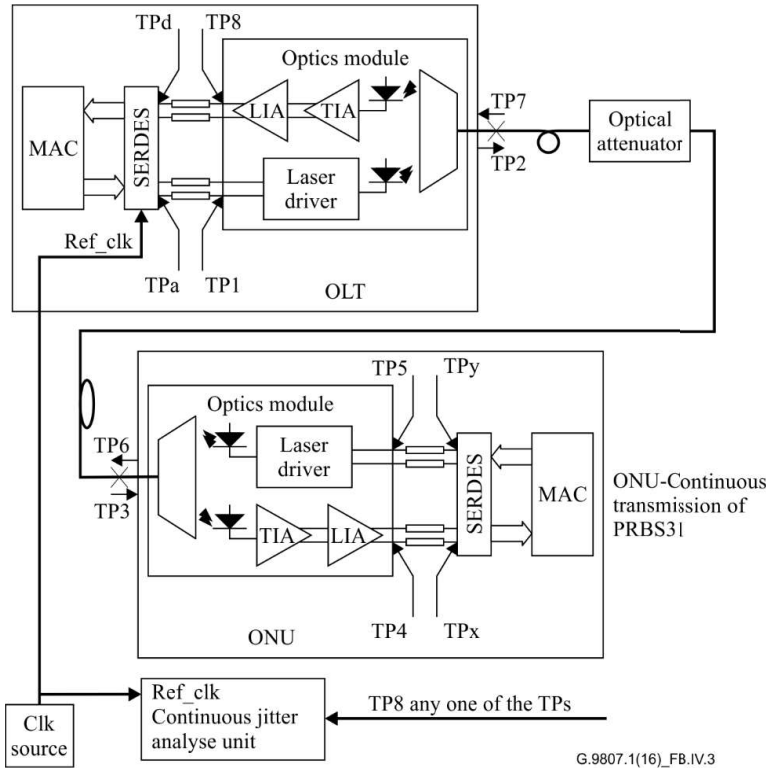

Figure B.IV.3 – Measurement set-up for jitter budget compliance

Exhibit 1010
IPR2024-00899, USPN 9,806,892
113 of 290

Appendix B.V

Measurement of burst mode acquisition time and burst mode eye opening at OLT

(This appendix does not form an integral part of this Recommendation.)

One of the major challenges for the burst mode clock and data recovery (CDR) implementation is the need to cope with the transient effects causing additional eye closure at the beginning of the burst. The burst mode CDR has to acquire the phase information exactly on the preamble portion of the incoming data stream, hence it would be reasonable to require the optical module to preserve good signal quality. The better the performance of the optics, the shorter the preamble required for correct system operation.

The burst mode eye opening is defined as the opening of the eye pattern that is collected starting from an offset X from the beginning of the burst. The burst mode acquisition time is defined as the shortest offset X from the beginning of the burst that will render a compliant eye pattern. A compliant eye pattern means an eye opening that meets the jitter budget and correct logical signal levels.

A set-up for measuring burst mode acquisition time and burst mode eye opening occurring at the beginning of each burst is presented in Figure B.V.1.

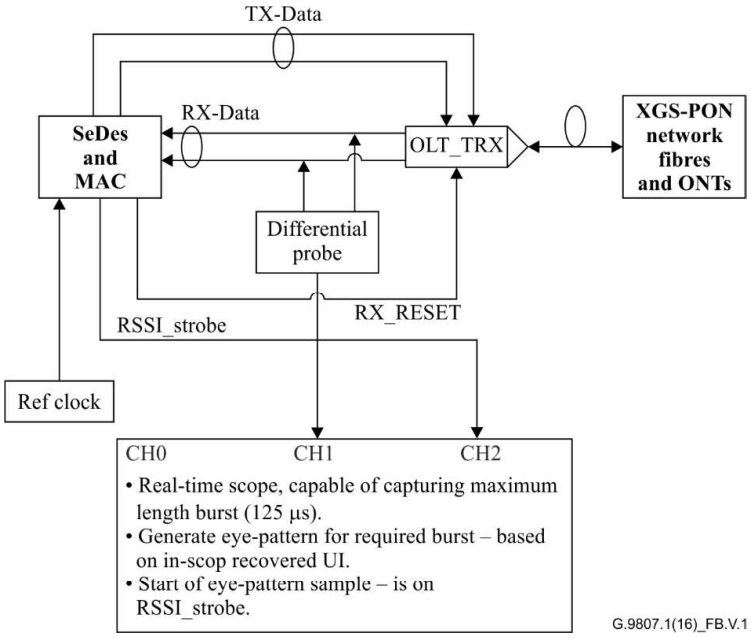

Figure B.V.1 – Set-up for measurement of burst mode acquisition time and burst mode eye opening

The following is a list of recommendations related to measurement of burst mode acquisition time and burst mode eye opening compliance:

- Use a real-time sampling scope capable of 40 giga samples per second or more and a memory depth that can cover at least 125 µs (5 million samples) for capturing the eye pattern.
- In order to separate the eye pattern that corresponds to a single given ONU, the oscilloscope is triggered on RSSI-strobe signal [b-ITU-T G-Sup.48]. The timing diagram for this signal is presented in Figure B.V.2.

Exhibit 1010
IPR2024-00899, USPN 9,806,892
114 of 290

- The burst mode eye diagram is built from the data collected during the sampling window defined in Figure B.V.3.
- The eye pattern is built using a unit interval (UI) based on an average UI calculated from the collected data.
- The differential probe can be placed to perform measurement at either TP8 (module pins) or at TPd (SERDES pins) (see Figure B.IV.2).
- The Pass/Fail condition should be a burst mode eye opening at TPd in excess of 1–TJ for test point TPd in Table B.IV.2 upstream jitter budget and correct logical signal levels.

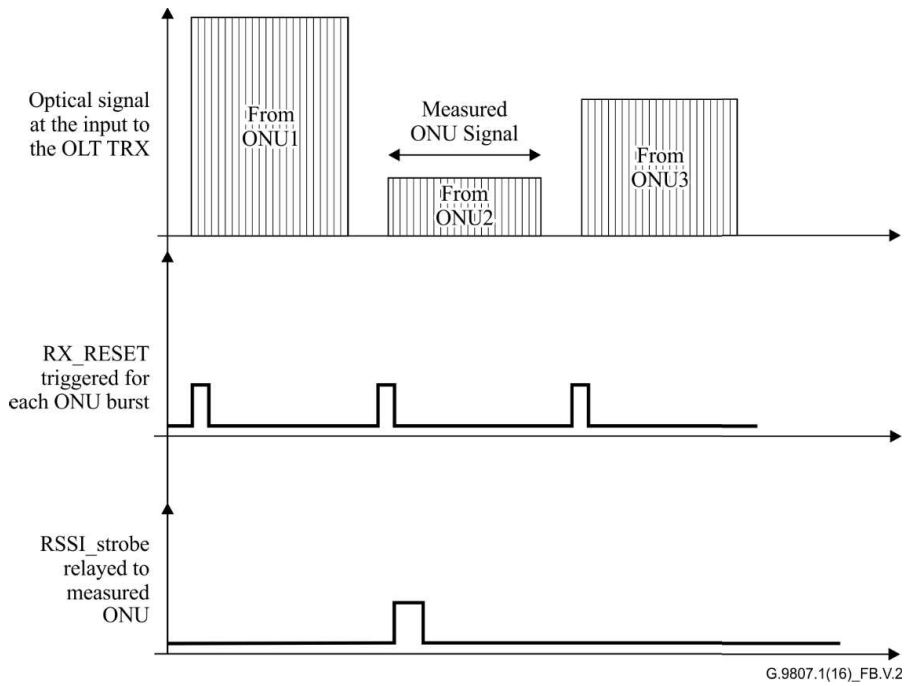

Figure B.V.2 – RSSI_strobe timing relative to selected burst source

The test set-up shown in Figure B.V.1 can be used to determine the burst mode acquisition time of a given set of optics. The eye pattern measurement is repeated for different values of the parameter X (defined in Figure B.V.3) and the minimum setting of X for which the (horizontal) burst mode eye opening at TPd is better than 1-TJ in Table B.IV.2 upstream jitter budget determines the burst mode acquisition time of the system.

The system will perform correctly for settings of the preamble length that are longer than the burst mode acquisition time.

Exhibit 1010
IPR2024-00899, USPN 9,806,892
115 of 290

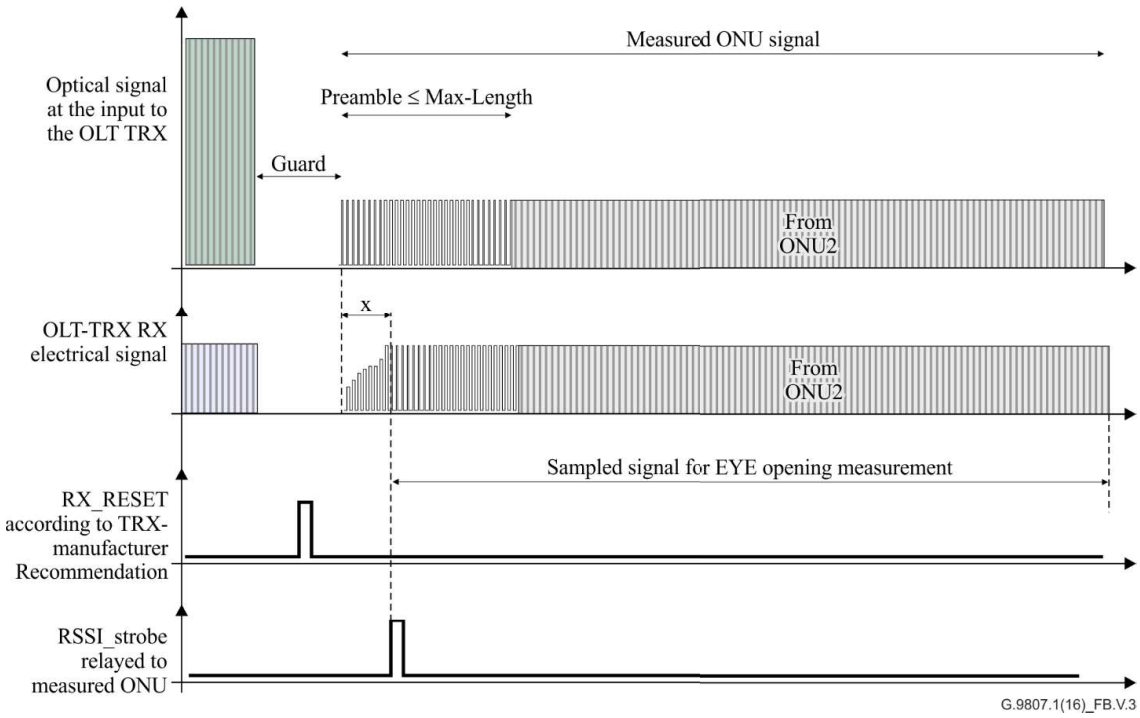

Figure B.V.3 – Timing diagram of the sampling window for burst mode acquisition time and burst mode eye opening measurements

Exhibit 1010
IPR2024-00899, USPN 9,806,892
116 of 290

Appendix B.VI

Upstream PMD examples for XGS-PON

(This appendix does not form an integral part of this Recommendation.)

This appendix provides examples of the single-rate PMD sublayer and the single data path dual-rate coexistence PMD sublayer of XGS-PON.

The topology for single-rate PMD sublayer is shown in Figure B.VI.1. Optical signals transmitted to PMD sublayer are received by single rate receiver then transmitted through a single rate transimpedence amplifier (TIA) to a single rate limiting amplifier (LA). The output of the limiting amplifier is then sent on to the physical medium attachment (PMA) interface.

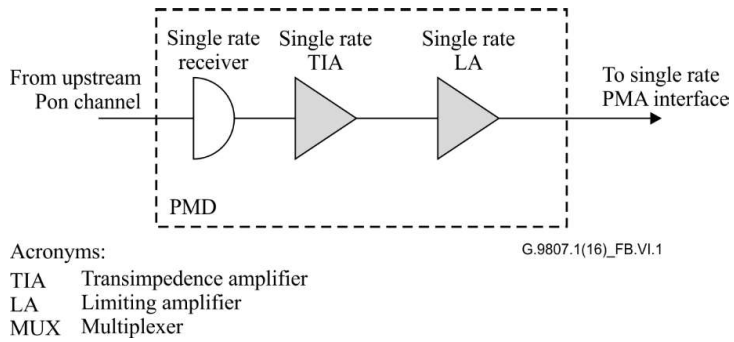

Figure B.VI.1 – Example of single-rate PMD data path

There are two types of topologies for the reference design of dual-rate transceivers in the OLT upstream direction. As shown in Figure B.VI.2, from a topological point of view, optical signals transmitted to the PMD layer are received by a dual rate receiver, then transmitted through a dual rate TIA. For the signals which are the output of the dual rate TIA, there exist two different processing methods as described below:

Exhibit 1010
IPR2024-00899, USPN 9,806,892
117 of 290

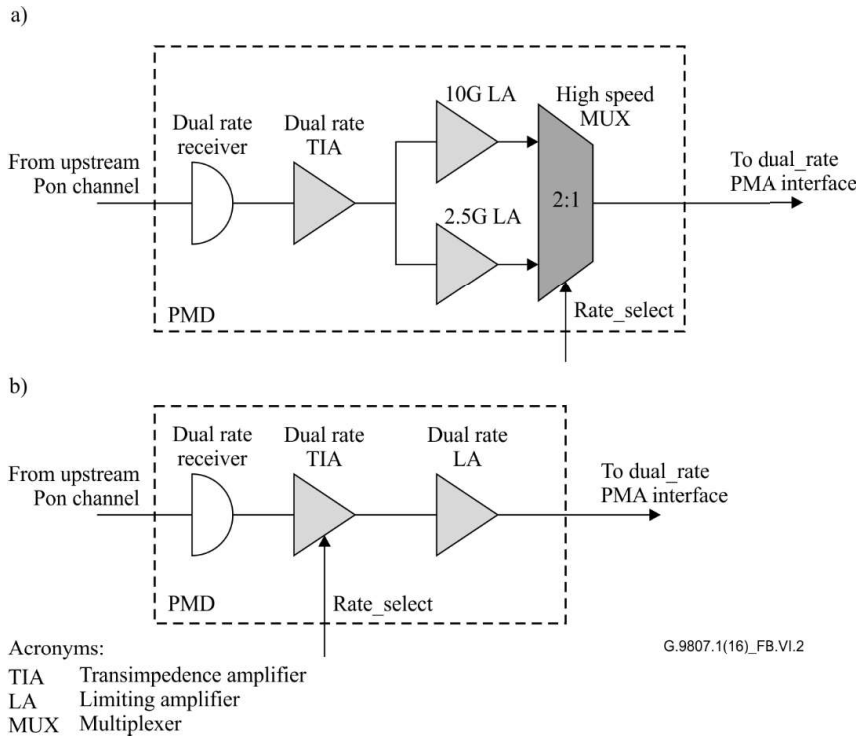

Figure B.VI.2 – Example of dual-rate coexistence PMD implementation with single data path

One processing method is shown in Figure B.VI.2(a). The output signal from TIA is transmitted to the 10G LA and 2.5G LA separately, then through two different limiting amplifiers. The outputs of the limiting amplifiers (LAs) are transmitted to high speed multiplexer (MUX) which selects 2.5G LA or 10G LA input signal with RATE_SELECT signal. An additional time parameter multiplexer switch time T(sm) is introduced here – it is the switching time between one input channels to another. This switching process could lead to additional overhead to the data transmission. But with proper design of DBA grant, it would have only slight impact on the upstream bandwidth.

The RATE_SELECT signal could be generated by XGS TC sublayer. In the upstream direction, the dual-rate OLT port supports the coexistence of 10G ONU and 2.5G ONUs via time division multiple access (TDMA). OLT port arbitrates 10G ONU and 2.5G ONU data according to the DBA grant window. It could be known which time slice is allocated for 2.5G or 10G stream by the calculation of DBA on the TC sublayer. As a result, the switching process of the MUX can start at the laser off time in the guard time of DBA grant window.

Another processing method is shown in Figure B.VI.2(b). The dual rate LA device is used for generating the output signal. The dual rate LA adapts the dual path amplify for the input signals of different frequencies using the following scheme.

The dual-rate LA features a low data rate path (1.25 Gbit/s to 4.25 Gbit/s) and a high data rate path (up to 11.3 Gbit/s), allowing for overall transmission optimization. Data path selection is controlled by the RATE SELECT signal. The processing of RATE_SELECT signal is the same as the first example design. The low data rate path further features a low pass filter that provides optimization for high frequency noise suppression, which could increase the optical signal receive sensitivity for 10G stream.

Exhibit 1010
IPR2024-00899, USPN 9,806,892
118 of 290

Appendix B.VII

Raman analysis in XGS-PON optional wavelength set

(This appendix does not form an integral part of this Recommendation.)

This appendix provides information about the impact of Stimulated Raman Scattering (SRS) on the XGS-PON optional wavelength set (GPON wavelengths).

The systems considered in this analysis are as follows:

– XGS-PON basic wavelength set (referenced in this appendix as XGS-X);

– XGS-PON optional wavelength set (referenced in this appendix as XGS-G).

The min/max transmit powers and wavelengths assumed are given in Tables B.VII.1 and B.VII.2.

Table B.VII.1 – Transmit power ranges for B+/N1

PON type	XGS-G	XGS-X
Nominal wavelength (nm)	1490	1577
Tx Pwr range (dBm)	2-5	2-5

Table B.VII.2 – Transmit power ranges for C+/E1

PON Type	XGS-G	XGS-X
Nominal wavelength (nm)	1490	1577
Tx Pwr range (dBm)	6-9	6-9

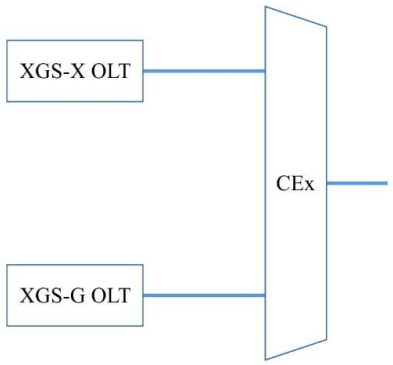

G.9807.1(16)-Amd.1(17)_FB.VII.1

Figure B.VII.1 – Central office splitting and combining

The diagram of the CO-side combining/splitting is shown in Figure B.VII.1. The CEx is assumed to be able to combine/split the different wavelengths under consideration.

XGS-G depletion

The details of the calculations for depletion of the XGS-G downstream receive signal are given below and summarized in Tables B.VII.3 and B.VII.4. Two different general OPL classes are analysed:

1) OPL class B+ (28 dB) and N1 (29 dB)

2) OPL class C+ (32 dB) and E1 (33 dB).

Exhibit 1010
IPR2024-00899, USPN 9,806,892
119 of 290

Various combinations of transmit powers are considered (min, max, average).

The depletion of the XGS-G downstream signal at the ONU receiver is given in Tables B.VII.3 (B+/N1) and B.VII.4 (C+/E1).

For both the B+/N1 case and for the C+/E1 case, XGS-X produce a XGS-G depletion less than 0.5 dB.

Table B.VII.3 – XGS-G depletion for class B+/N1

XGS-X at min Tx	−0.061
XGS-X at (min+max)/2 (in dB) Tx	−0.086
XGS-X at max Tx	−0.121

Table B.VII.4 – XGS-G depletion for class C+/E1

XGS-X at min Tx	−0.153
XGS-X at (min+max)/2 (in dB) Tx	−0.216
XGS-X at max Tx	−0.304

Note that on a 20 km fibre, loss at 1490 nm is approximately 2 dB less than loss at 1310 nm. So for 20 km fibre, the Raman depletion from XGS-X into XGS-G is less than this 2 dB loss differential.

Raman depletion calculations

The following are details regarding the Raman calculations used in this contribution: non-depleted Raman model, depletion calculated at 20 km, polarization factor of 2, and CEx loss of 0 dB.

The Raman gain coefficient used is the following:

Wavelength range (nm)	1490 –> 1577
g_R [1/mW]	3.190×10^{-4}

Exhibit 1010
IPR2024-00899, USPN 9,806,892
120 of 290

Annex C

Transmission convergence layer specifications of XGS-PON

(This annex forms an integral part of this Recommendation.)

This annex includes comprehensive transmission convergence (TC) layer specifications of XGS-PON.

The TC layer of XGS-PON is largely based on [ITU-T G.989.3]. A key consideration for the XGS-PON TC layer specification is that TC chipset implementations complying with [ITU T G.989.3] are able to be reused in XGS-PON by, in general terms, disabling the wavelength channel management and tuning functionality. Furthermore, support for XG-PON ONUs is also enabled in such a XGS-PON TC Layer.

Editorial note: Clauses C.1 to C.5 are intentionally left blank.

> **Important notice**: *This annex is structurally, and in most parts content wise, aligned with Recommendation ITU-T G.989.3. All main clause numbers figure numbers and table numbers are thus aligned with those of the Recommendation ITU-T G.989.3. Figures or tables that are applicable to XG-PON but that are not relevant to XGS-PON are not shown, but figure and table numbering sequence is kept (i.e., topics that are similar in XG-PON and XGS-PON use the same figure and table numbers). Additional information is provided in Appendix II.*

C.6 XGS-PON transmission convergence layer overview

The XGS-PON system uses a TC layer defined in clause C.6.1.

C.6.1 XGS-PON transmission convergence layer

This clause describes the TC layer for XGS-PON.

Clause C.6.1 is structured as follows.

Clause C.6.1.1 describes supported line rate combinations;

clause C.6.1.2 introduces the sublayer structure of the XGS-PON TC layer and reviews the transformation of a SDU as it crosses the sub-layers;

clause C.6.1.3 discusses the basic functionality of the three sub-layers of the XGS-PON TC layer; clause C.6.1.4 provides an overview of the three management channels in a XGS-PON system; clause C.6.1.5 discusses the principles and identifiers of the time division multiplexing; finally, clause C.6.1.6 reviews the basics of the upstream media access control.

C.6.1.1 Supported nominal line rates

The XGS-PON TC layer specification is applicable to the OLTs that support the following line rate combinations between any two consecutive events involving OLT reconfiguration or replacement.

Exhibit 1010
IPR2024-00899, USPN 9,806,892
121 of 290

Table C.6.1 – Supported OLT nominal line rate combinations in XGS-PON

Downstream line rate (Gbit/s)	Upstream line rate (Gbit/s)
9.95328	2.48832
9.95328	9.95328
9.95328	9.95328 and 2.48832
NOTE – Line rate 2.48832 Gbit/s is included to support TDMA coexistence with XG-PON, see clause A.5.2.3 for the details of coexistence.	

The third line rate combination in Table C.6.1 defines a dual-rate OLT capable of accommodating ONUs of the first and second line rate combinations within the same PHY frame.

The XGS-PON TC layer specification is applicable to the ONUs that support the following nominal line rate combinations (see Table C.6.2) within one ONU's activation cycle:

Table C.6.2 – Supported ONU nominal line rate combinations in XGS-PON

Downstream line rate (Gbit/s)	Upstream line rate (Gbit/s)
9.95328	9.95328

In addition, the XGS-PON TC layer specification is applicable to hybrid XGS-PON/XG-PON capable ONUs satisfying the following constraint:

– an ONU supporting multiple (9.95328 and 2.48832 Gbit/s) upstream line rates within an activation cycle

Note that a XGS-PON ONU is not required to be dual upstream rate capable. Furthermore, the mechanism for dynamic change in the upstream nominal line rate remains for further study.

C.6.1.2 XGS-PON TC layer structure

The XGS-PON TC layer is a part of the XGS-PON protocol stack that specifies the formats and procedures of mapping between upper layer service data units (SDUs) and a bit stream suitable for modulating the optical carrier.

The XGS-PON TC layer is composed of three sublayers: the XGS-PON TC service adaptation sublayer, the XGS-PON TC framing sublayer and the XGS-PON TC PHY adaptation sublayer. The XGS-PON TC layer is bidirectional between the OLT and ONU sides of a XGS-PON system. In the downstream direction, the interface between the XGS-PON TC layer and the PMD layer is represented by a continuous bit stream at the nominal line rate, which is partitioned into 125 μs frames. In the upstream direction, the interface between the XGS-PON TC layer and the PMD layer is represented by a sequence of precisely timed bursts. The key transformation stages involved in the mapping between the upper layer SDUs and the PHY bit stream for the downstream and upstream directions are shown in Figures C.6.1and C.6.2, respectively.

Exhibit 1010
IPR2024-00899, USPN 9,806,892
122 of 290

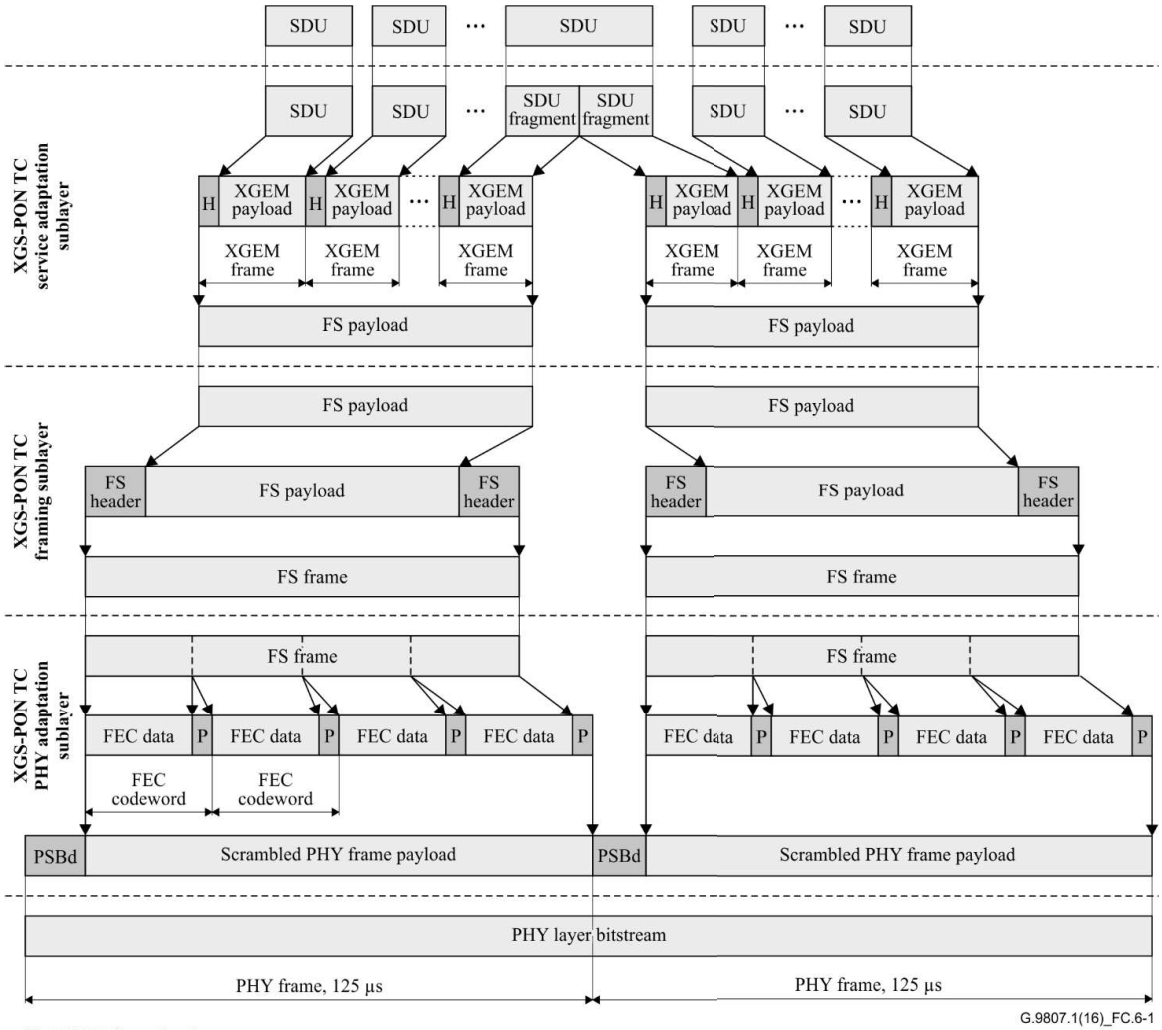

H XGEM frame header
P FEC parity

NOTE – FEC encoding of a FS frame is a static run-time option.

Figure C.6.1 – Downstream SDU mapping into PHY frames

Exhibit 1010
IPR2024-00899, USPN 9,806,892
123 of 290

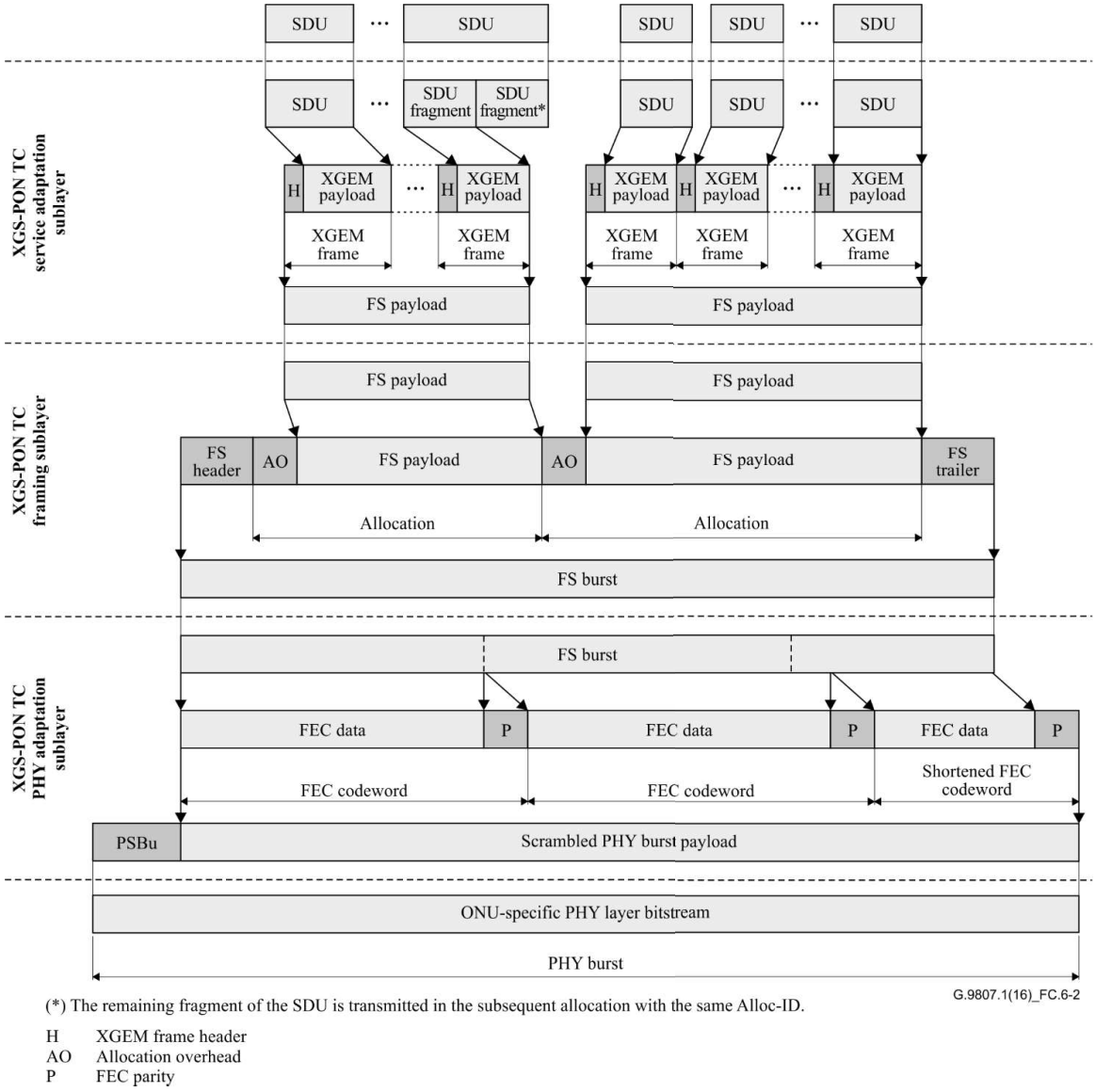

(*) The remaining fragment of the SDU is transmitted in the subsequent allocation with the same Alloc-ID.

H XGEM frame header
AO Allocation overhead
P FEC parity

Figure C.6.2 – Upstream SDU mapping into PHY bursts

C.6.1.3 XGS-PON TC sublayer functions

The XGS-PON TC information flow described in this clause is illustrated in Figure C.6.3.

Exhibit 1010
IPR2024-00899, USPN 9,806,892
124 of 290

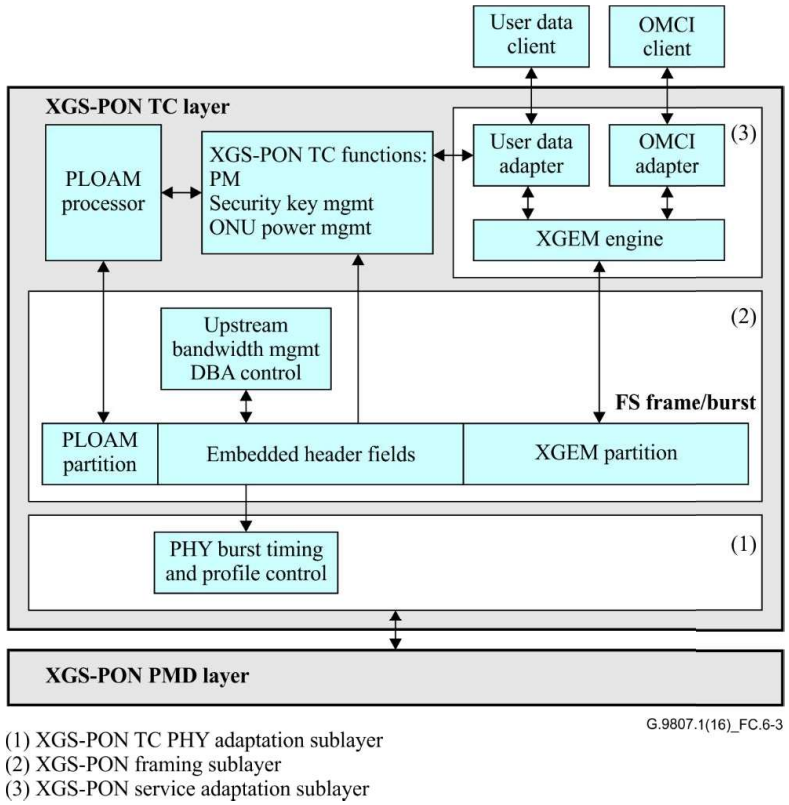

Figure C.6.3 – Outline of XGS-PON TC information flow

C.6.1.3.1 XGS-PON TC service adaptation sublayer

The XGS-PON TC service adaptation sublayer is responsible for upper layer SDU encapsulation, multiplexing and delineation.

On the transmitter side, the XGS-PON TC service adaptation sublayer accepts from the clients the upper layer SDUs, represented by user data frames and ONU management and control interface (OMCI) traffic, performs SDU fragmentation as necessary, assigns a XGEM Port-ID to a SDU or SDU fragment, and applies the XGEM encapsulation method to it to obtain a XGEM frame. The XGEM frame payload can be optionally encrypted. A series of XGEM frames form a payload of a FS frame in the downstream direction or a FS burst in the upstream direction.

On the receiver side, the XGS-PON TC service adaptation sublayer accepts the payload of the FS frames or FS bursts, performs XGEM frame delineation, filters XGEM frames based on the XGEM Port-IDs, decrypts the XGEM payload if encryption has been performed by the transmitter, reassembles the fragmented SDUs and delivers the SDUs to the respective clients.

See clauses C.9.1, C.9.2 and C.9.3 for the details of XGEM framing, XGEM frame delineation and SDU fragmentation, respectively.

As the XGS-PON TC service adaptation sublayer deals with two types of SDUs, user data frames and OMCI messages, it can be logically decomposed into a XGEM engine, responsible for XGEM Port-ID multiplexing and filtering, and two service adapters: the user data adapter and the OMCI adapter. The user data adapter can be configured to accommodate a variety of upper layer transport interfaces.

See clause C.9.4 for the most common cases of service mappings into XGEM frames.

Exhibit 1010
IPR2024-00899, USPN 9,806,892
125 of 290

C.6.1.3.2 XGS-PON TC framing sublayer

The XGS-PON TC framing sublayer is responsible for the construction and parsing of the overhead fields that support the necessary PON management functionality. The XGS-PON TC framing sublayer formats are devised so that the frames, bursts and their elements are aligned to 4-byte word boundaries, whenever possible.

On the transmitter side, the XGS-PON TC framing sublayer accepts multiple series of XGEM frames forming the FS payload from the XGS-PON TC service adaptation sublayer, and constructs the downstream FS frame or upstream FS burst by providing the overhead fields for the embedded operation, administration and maintenance (OAM) and the physical layer operation, administration and maintenance (PLOAM) messaging channel. The size of each downstream FS frame payload is obtained by subtracting the variable size of the upstream bandwidth management overhead and the PLOAM channel load from the fixed size of the downstream FS frame. In the upstream direction, a FS burst multiplexes FS payloads associated with multiple Alloc-IDs, the size of each payload being determined based on the incoming bandwidth management information.

On the receiver side, the XGS-PON TC framing sublayer accepts the FS frames or FS bursts, parses the FS overhead fields, extracts the incoming embedded management and PLOAM messaging flows and delivers the FS payloads to the XGS-PON TC service adaptation sublayer. The incoming PLOAM messages are delivered to the PLOAM processor. The embedded OAM information to the extent pertaining to upstream bandwidth management (BWmap parsing) and dynamic bandwidth assignment (DBA) signalling is processed within the framing sublayer itself, providing partial controls over the PHY adaptation sublayer (upstream PHY burst timing and profile control). The rest of the embedded OAM information is delivered to the appropriate XGS-PON TC functional entities outside of the framing sublayer, such as ONU electrical power management and performance monitoring blocks.

See clause C.8.1.1 for the details of downstream FS frame format specification, including BWmap parsing, and clause C. 8.1.2 for the details of upstream FS burst format specification, including DBA signalling.

C.6.1.3.3 XGS-PON TC PHY adaptation sublayer

The XGS-PON TC PHY adaptation sublayer encompasses the functions that modify the bit stream modulating the optical transmitter with the goal to improve the detection, reception and delineation properties of the signal transmitted over the optical medium.

On the transmitter side, the XGS-PON TC PHY adaptation sublayer accepts the FS frames (in the downstream direction) or FS bursts (in the upstream direction) from the framing sublayer, optionally performs FEC encoding, performs scrambling of the content, prepends the physical synchronization block appropriate for downstream (PSBd) or upstream (PSBu) transmission and provides timing alignment of the resulting bit stream.

On the receiver side, the XGS-PON TC PHY adaptation sublayer performs physical synchronization and delineation of the incoming bit stream, descrambles the content of the PHY frame or PHY burst, optionally performs FEC decoding, delivering the resulting FS frames (in the downstream direction) or FS bursts (in the upstream direction) to the XGS-PON TC framing sublayer.

The details of the PSBd and PSBu overhead fields are specified in clauses C.10.1.1.1 and C.10.1.2.1, respectively.

The use of FEC improves the effective sensitivity and overload characteristics of the optical receiver by introducing redundancy in the transmitted bit stream and allowing the receiver to operate at a higher BER level. FEC is specified in detail in clause C.10.1.3.

Bit stream scrambling randomizes the transmission and helps to meet the specified CID tolerance. The XGS-PON PON scrambling method is specified in clause C.10.1.4.

Exhibit 1010
IPR2024-00899, USPN 9,806,892
126 of 290

The downstream and upstream line codes employed in XGS-PON PON are specified in clause B.9.2.6.

C.6.1.4 Management of a XGS-PON system

The ONU control, operation and management information in a XGS-PON system is carried over three channels: embedded OAM, PLOAM and OMCC (see Figure C.6.4). The embedded OAM and PLOAM channels manage the functions of the PMD and XGS-PON TC layers. The OMCC carries the messages of the OMCI protocol, which provides a uniform system for managing higher (service-defining) layers. For the PLOAM channel of XGS-PON in-band transportation is used.

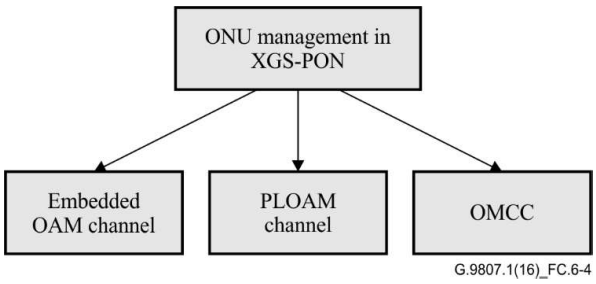

Figure C.6.4 – ONU management channels and options

C.6.1.4.1 Embedded OAM

The embedded OAM channel is provided by well-defined header fields and embedded structures of the downstream FS frame and upstream FS burst. The embedded OAM channel offers a low-latency path for the time-urgent control information because each information piece is directly mapped into a specific field. The functions that use the embedded OAM channel include upstream PHY burst timing and profile control, bandwidth allocation, dynamic bandwidth assignment signalling, forced wake-up and dying gasp indication. The detailed description of the header fields and structures involved in support of these functions is provided in clause C.8.1 as a part of the XGS-PON TC framing sublayer specification.

C.6.1.4.2 PLOAM channel

The PLOAM channel is message based and is used for all PMD and FS management information that is not sent via the embedded OAM channel. The PLOAM message structure, message types and detailed format specifications are provided in clause C.11.

PLOAM messages are carried in a designated partition of the downstream FS frame and upstream FS burst.

C.6.1.4.3 ONU management and control channel (OMCC)

The ONU management and control channel (OMCC) uses the OMCI messages to manage the service-defining layers residing above the XGS-PON TC layer. The XGS-PON TC layer must provide a XGEM-based transport interface for this management traffic, including configuration of appropriate transport protocol flow identifiers (XGEM Port-IDs). This Recommendation specifies a format and transfer mechanism for the OMCC channel. The detailed OMCI specification can be found in [ITU-T G.988].

The OMCI adapter at the ONU is responsible for filtering and de-encapsulating OMCI-carrying XGEM frames in the downstream direction, and for encapsulating OMCI SDUs in the upstream direction. OMCI SDUs are handed off to the logic that implements the OMCI functions.

The OMCI adapter at the OLT is responsible for filtering and de-encapsulating OMCI-carrying XGEM frames in the upstream direction, and for encapsulating OMCI SDUs from the OMCI control logic into XGEM frames for transport to the ONU.

Exhibit 1010
IPR2024-00899, USPN 9,806,892
127 of 290

C.6.1.4.4 ICTP

In order to support such functionalities as protection switching, the OLT channel terminations in a XGS-PON system need to interact with each other. This interaction between PON LTs may take the form of exchanging ICTP functional primitives over the abstract ICTP transportation channel. The ICTP transportation channel abstraction allows a variety of physical implementations depending on the relative location of the interacting PON LTs. The discussion of the ICTP use cases and functional primitives can be found in clause C.18 and Appendix C.VI. The detailed ICTP specification is out of scope of this Recommendation. How ICTP may be used for the single channel XGS-PON system is for further study.

C.6.1.5 Time division multiplexing architecture

C.6.1.5.1 Overview

For XGS-PON, the principles of time division multiplexing (TDM) and time division multiple access (TDMA) apply.

In the downstream direction of XGS-PON, the traffic multiplexing functionality is centralized as shown in Figure C.6.5. The OLT multiplexes XGEM frames onto the transmission medium using XGEM Port-ID as a key to identify XGEM frames that belong to different downstream logical connections. Each ONU filters the downstream XGEM frames based on their XGEM Port-IDs and processes only the XGEM frames that belong to that ONU. A multicast XGEM port can be used to carry XGEM frames to more than one ONU.

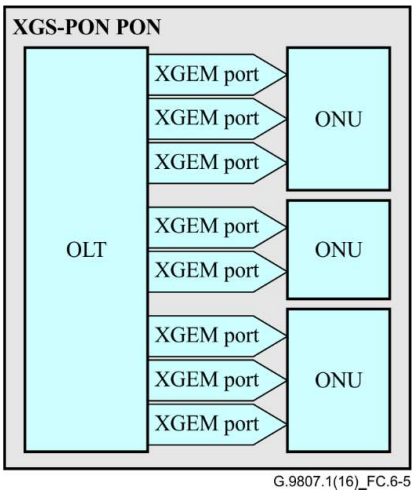

Figure C.6.5 – Downstream multiplexing in XGS-PON

In the upstream direction of XGS-PON, the traffic multiplexing functionality is distributed (see Figure C.6.6). The OLT grants upstream transmission opportunities, or upstream bandwidth allocations, to the traffic-bearing entities within the subtending ONUs. The ONU's traffic-bearing entities that are recipients of the upstream bandwidth allocations are identified by their allocation IDs (Alloc-IDs). Bandwidth allocations to different Alloc-IDs are multiplexed in time as specified by the OLT in the bandwidth maps transmitted downstream. Within each bandwidth allocation, the ONU uses the XGEM Port-ID as a multiplexing key to identify the XGEM frames that belong to different upstream logical connections.

Exhibit 1010
IPR2024-00899, USPN 9,806,892
128 of 290

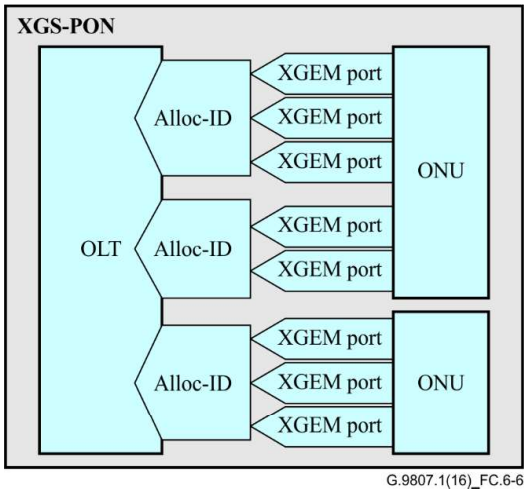

Figure C.6.6 – Upstream multiplexing in XGS-PON

C.6.1.5.2 NG-PON2 system identifier

Not applicable to XGS-PON.

C.6.1.5.3 PON-ID

A PON-ID is a 32-bit structured number that uniquely identifies a XGS-PON OLT entity within a domain.

For the support of TDMA coexistence with XG-PON ONUs, the PON-ID of a XGS-PON system can be provisioned in the same way as the 32-bit PON-ID field in [ITU-T G.987.3]. See Appendix C.VIII for PON-ID usage examples.

The PON-ID of the specific XGS-PON OLT is carried downstream within the operation control (OC) structure of the PSBd field.

C.6.1.5.4 Downstream wavelength channel identifier

In a XGS-PON system, downstream wavelength channel ID (DWLCH ID) is a 4-bit number.

NOTE – Equivalent to Table 6-3 of [ITU-T G.989.3]; it is not relevant to XGS-PON.

DWLCH ID is a part of PON-ID (see clause C.6.1.5.3), which is transmitted downstream within the OC structure of the PSBd field. It can take on any value provisioned by the operator.

C.6.1.5.5 Upstream wavelength channel identifier

Upstream wavelength channel ID (UWLCH ID) is a 4-bit number set to all zeros for XGS-PON.

C.6.1.5.6 ONU identifier

In a XGS-PON system, the ONU-ID is a 10-bit identifier that the OLT assigns to an ONU during the ONU's activation using the Assign_ONU-ID PLOAM message.

The ONU-ID is unique across the ODN. When an ONU enters the Initial state (O1) of the ONU activation state machine (see clause C.12 for the causes of the possible state transitions to the Initial state (O1)), it discards the previously assigned ONU-ID along with all dependent XGS-PON TC layer configuration assignments (see Table C.12.4 and Table C.12.5).

The semantics of the ONU ID values is shown in Table C.6.4.

Exhibit 1010
IPR2024-00899, USPN 9,806,892
129 of 290

Table C.6.4 – ONU ID values

ONU-ID	Designation	Comment
0..1 020	Assignable	Assigned by OLT at ONU activation; used to identify the sender of an upstream burst or a PLOAMu message and the recipient of a PLOAMd message.
1 021	Reserved	The number shall not be assigned to any ONU, and shall not be used as an ONU-ID.
1 022	Broadcast /reserved	Broadcast address in PLOAMd; not used in PLOAMu. The number shall not be assigned to any ONU, and shall not be used as an ONU-ID.
1 023	Broadcast /unassigned	Broadcast address in PLOAMd; unassigned ONU in PLOAMu.

C.6.1.5.7 Allocation identifier (Alloc-ID)

The allocation identifier (Alloc-ID) is a 14-bit number that the OLT assigns to an ONU to identify a traffic-bearing entity that is a recipient of upstream bandwidth allocations within that ONU. Such a traffic-bearing entity can be represented either by a T-CONT or by the upstream OMCC.

Each ONU is assigned one or more Alloc-IDs including at least the default Alloc-ID. The ONU's default Alloc-ID is numerically equal to its ONU-ID, and is assigned implicitly, by virtue of the ONU-ID assignment at ONU activation. The default Alloc-ID carries the upstream OMCC traffic and may carry user data traffic. The default Alloc-ID is also used for PLOAM-only allocations to a specific ONU. The default Alloc-ID cannot be de-allocated or changed throughout the duration of the ONU activation cycle (i.e., until the ONU is reactivated and reassigned a new ONU-ID).

Additional Alloc-IDs are used to carry user data traffic and are assigned to an ONU by the OLT explicitly, in a revertible manner, by means of the Assign_Alloc-ID PLOAM message (see clause C.11.3.3.7 for the Assign_Alloc-ID PLOAM message definition).

An Alloc-ID is unique across the ODN and can be assigned to at most one ONU in a XGS-PON system. When an ONU enters the Initial state (O1) of the ONU activation state machine (see clause C.12 for the causes of the possible state transitions to the Initial state (O1)), it discards all Alloc-ID assignments, including the default Alloc-ID assignment.

The semantics of the Alloc-ID values is shown in Table C.6.5.

Exhibit 1010
IPR2024-00899, USPN 9,806,892
130 of 290

Table C.6.5 – Alloc-ID values

Alloc-ID	Designation	Comment
0..1 020	Default	Default Alloc-ID, which is implicitly assigned with, and is equal to, the ONU-ID.
1 021	Broadcast	Used by the OLT in a serial number grant allocation structure to indicate that any ONU transmitting at either 9.95328 Gbit/s or 2.48832 Gbit/s upstream line rate which executes the serial number acquisition phase of the activation procedure may use this allocation to transmit a serial number response. This value shall not be used for the case of XGS-PON interworking with XG-PON.
1 022	Broadcast	Used by the OLT in a serial number grant allocation structure to indicate that any ONU transmitting at 9.95328 Gbit/s upstream line rate which executes the serial number acquisition phase of the activation procedure may use this allocation to transmit a serial number response. This value shall be used for serial number acquisition with XGS-PON ONUs.
1 023	Broadcast	Used by OLT in a serial number grant allocation structure to indicate that any ONU transmitting at 2.48832 Gbit/s upstream line rate which executes the serial number acquisition phase of the activation procedure may use this allocation to transmit a serial number response. This value shall be used for serial number acquisition with XG-PON ONUs
1 024..16 383	Assignable	If more than a single Alloc-ID is needed for an ONU, the OLT assigns additional Alloc-IDs to that ONU by selecting a unique number from this range and communicating it to the ONU using the Assign_Alloc-ID PLOAM message.
NOTE 1 – The OLT may use Alloc-ID 1 022 or 1 023 in use cases with a single upstream rate, 9.95328 Gbit/s or 2.48832 Gbit/s, respectively, to block accidentally connected ONUs transmitting at an incorrect upstream rate. The OLT may use Alloc-ID 1 021 in dual rate deployments, to reduce the discovery overhead by giving an opportunity to register simultaneously when the OLT uses a dual rate receiver. The OLT may not use Alloc-ID 1 021 for the case of XGS-PON interworking with XG-PON. NOTE 2 – At its discretion, the OLT may formally grant an upstream bandwidth allocation to an Assignable Alloc-ID which has not been assigned to any ONU. Such an allocation causes a quiet window in the upstream transmission.		

C.6.1.5.8 XGEM port identifier

The XGEM port identifier, or XGEM Port-ID, is a 16-bit number that is assigned by the OLT to an individual logical connection. The XGEM Port-ID assignment to the OMCC logical connection is implicit by virtue of the ONU-ID assignment to the given ONU. The OMCC Port-ID is numerically equal to the respective ONU-ID. All other XGEM Port-ID assignments for the ONU are performed via the OMCC.

When an ONU enters the Initial state (O1) of the ONU activation state machine (see clause C.12 for the causes of the possible state transitions to the Initial state (O1)), it discards the default XGEM Port-ID assignment, but retains the previously assigned non-default XGEM Port-IDs (see Tables C.12.4 and C.12.5).

The semantics of the XGEM Port-ID values is shown in Table C.6.6.

Exhibit 1010
IPR2024-00899, USPN 9,806,892
131 of 290

Table C.6.6 – XGEM Port-ID values

XGEM Port-ID	Designation	Comment
0..1 020	Default	Default XGEM Port-ID, which is implicitly assigned with and is equal to the ONU-ID. It identifies the XGEM port used by the OMCC traffic.
1 021..65 534	Assignable	If more than a single XGEM Port-ID is needed for an ONU, the OLT assigns additional Port-IDs to that ONU by selecting a unique number from this range and communicating it to the ONU using the OMCC. The values 1 021 and 1 022 shall not be assigned to XG-PON ONUs.
65 535	Idle	Reserved for Idle XGEM Port-ID

C.6.1.5.9 Channel partition index

Not applicable to XGS-PON.

C.6.1.6 Media access control

In a XGS-PON system, the OLT provides media access control for the upstream traffic. In the basic concept, each downstream PHY frame contains a bandwidth map (BWmap) that indicates the location for an upstream transmission by each ONU in the corresponding upstream PHY frame. The media access control concept in a XGS-PON system is illustrated in Figure C.6.7.

The OLT transmits a downstream PHY frame every 125 µs. Because of the varying fibre distance, each given PHY frame reaches different ONUs at generally different time instants. With each received downstream PHY frame, an ONU associates the corresponding upstream PHY frame. The individual equalization delays established in the course of ONU ranging serve to synchronize all ONUs to the same reference at the start of each upstream PHY frame in such a way that upstream transmissions by any two ONUs, occurring at the same offset with respect to the start of the upstream PHY frame, would reach the OLT at the same time.

For each PHY frame, the OLT creates and transmits downstream a BWmap that specifies a sequence of non-overlapping upstream transmissions by different ONUs. A BWmap contains a number of allocation structures, each allocation structure being addressed to a particular Alloc-ID of a specific ONU. A sequence of one or more allocation structures addressed to Alloc-IDs that belong to the same ONU forms a burst allocation series. Each burst allocation series contains a start pointer indicating the beginning of the burst within the upstream PHY frame and a sequence of grant sizes that the ONU is allowed to transmit. The start pointers refer to offsets within the upstream PHY frame (on the XGS-PON TC PHY adaptation sublayer), whereas the grant sizes pertain to the payload of FS frame (on the XGS-PON TC framing sublayer). The start pointers and grant sizes are expressed in units whose granularity depend on the upstream line rate of the target ONU: one word (4 bytes) for an ONU transmitting at 2.48832 Gbit/s in the upstream, and one block (16 bytes) for an ONU transmitting at 9.95328 Gbit/s in the upstream. The OLT may grant higher or lower effective data rates by controlling the size and frequency of the grants and may modulate the effective data rate via a dynamic scheduling.

Exhibit 1010
IPR2024-00899, USPN 9,806,892
132 of 290

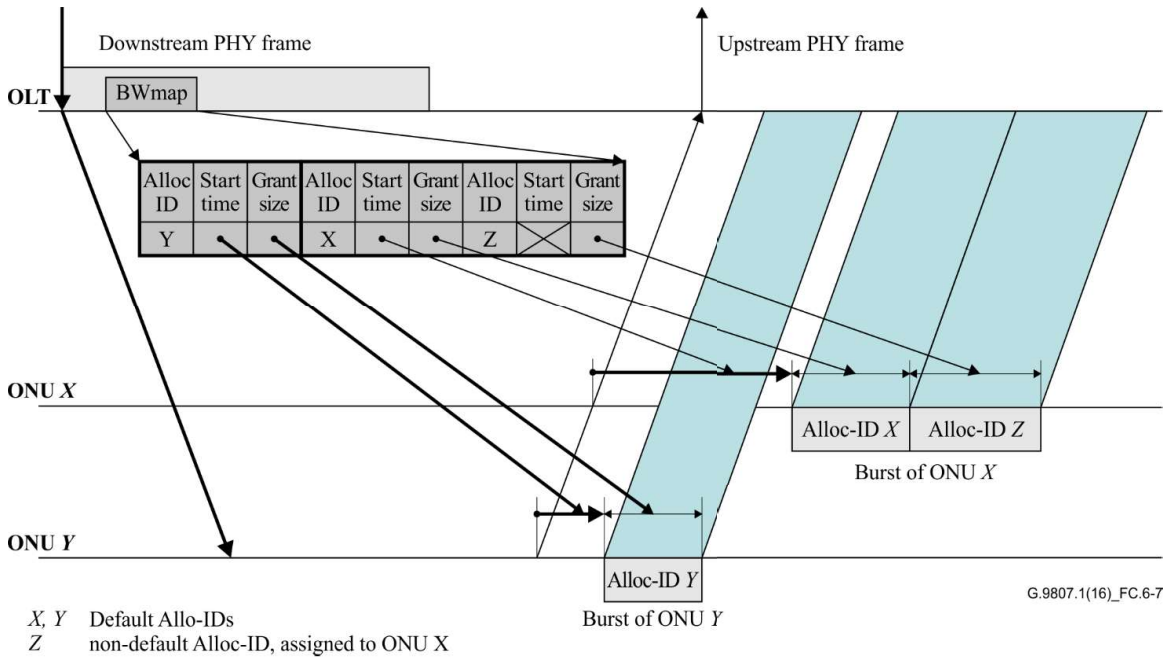

Figure C.6.7 – XGS-PON TC media access control concept

The use of BWmap parameters is discussed more precisely in clause .C.8.1.1.2 The details of the PON timing relationships can be found in clause C.13.1.

C.6.2 PtP WDM AMCC transmission convergence layer overview

Not applicable to XGS-PON.

C.7 Resource allocation and quality of service

Access-specific quality of service (QoS) capabilities are an integral part of the end-to-end QoS provisioning mechanisms. They are necessary, but they are not sufficient to ensure that the QoS objectives of end-to-end traffic flows are met. In a XGS-PON-based optical access network, QoS capabilities are supported by the OLT and ONU network elements and are associated with the ways and means to allocate available resources, including processing capacity and buffer space, to individual traffic flows and traffic flow aggregates.

The remainder of this clause is dedicated to resource allocation with a single upstream line rate. The issues associated with the dual upstream line rate support are left to the implementer's discretion. The implementation should resolve them consistently with the base case considered in this clause.

C.7.1 Principles of downstream and upstream resource allocation

A traffic flow is provisioned with a specific set of downstream and upstream service parameters. These parameters may be represented by a traffic descriptor.

C.7.1.1 Forms of traffic descriptor

In the most general case, a traffic descriptor has the form expressed in C.7-1.

$$D = \langle R_F, R_A, R_M, \chi_{AB}, P, \omega \rangle \qquad \text{(C.7-1)}$$

where:

R_F: Fixed bandwidth [bit/s];

R_A: Assured bandwidth [bit/s];

Exhibit 1010
IPR2024-00899, USPN 9,806,892
133 of 290

R_M: Maximum bandwidth [bit/s];

χ_{AB}: Ternary eligibility indicator for additional bandwidth assignment: {none, non-assured (NA), best effort (BE)};

P: Priority for best effort bandwidth assignment;

ω: Weight for best effort bandwidth assignment.

Fixed bandwidth, $R_F \geq 0$, represents the reserved portion of the link capacity that is allocated to the given traffic flow, regardless of its traffic demand and the overall traffic load conditions.

Assured bandwidth, $R_A \geq 0$, represents a portion of the link capacity that is allocated to the given traffic flow as long as the flow has unsatisfied traffic demand, regardless of the overall traffic conditions.

Maximum bandwidth, $R_M > 0$, represents the upper limit on the total bandwidth that can be allocated to the traffic flow under any traffic conditions.

In its extended optional form, the traffic descriptor is composed of the bandwidth parameters and the timing parameters, and is represented as:

$$D = \langle R_F, R_A, R_M, \chi_{AB}, P, \omega, T_{JT}, T_{BDT}, T_{PST} \rangle \tag{C.7-1a}$$

where, additionally:

Jitter tolerance, $T_{JT} > 0$, represents the minimum time interval over which an active traffic flow shall receive an allocation of the size corresponding at least to the assigned bandwidth.

Bandwidth assignment delay tolerance, $T_{BDT} > 0$, represents the maximum delay that a previously inactive traffic flow may experience from the moment it becomes active to the moment it receives an allocation of the size corresponding at least to the assigned bandwidth.

Implementations prior to 29 October 2020 (the date of approval of ITU-T G.9807.1 (2016) Amendment 2 (2020)) are not required to support the extended form of the traffic descriptor. For subsequent implementations, the support of the extended optional form of the traffic descriptor is subject to operator requirements. Implementations not supporting the extended form of the traffic descriptor are expected to have well-understood default values or bounds of the timing parameters, based on the system design.

C.7.1.2 Traffic descriptor constraints

A correctly formed traffic descriptor should satisfy the following three invariant restrictions conditions of C.7-2:

$$\begin{gathered} R_M \geq R_F + R_A \\ \text{if } \chi_{AB} = NA, \text{ then } R_M > R_F + R_A > 0 \\ \text{if } \chi_{AB} = BE, \text{ then } R_M > R_F + R_A \geq 0 \end{gathered} \tag{C.7-2}$$

In addition, the overall traffic specification should satisfy the basic stability condition of C.7-3:

$$\sum_i \left(R_F^i + R_A^i \right) \leq C \tag{C.7-3}$$

where the summation is over the set of all upstream or downstream traffic flows on the XGS-PON, and C is the effective capacity (i.e., excluding overheads) of the upstream or downstream interface, respectively.

Exhibit 1010
IPR2024-00899, USPN 9,806,892
134 of 290

The specified general form of traffic descriptor allows support of both rate-based service disciplines and priority-based service disciplines. By setting certain descriptor components to zero (rate parameters) or identical values (priority and weight parameters), the system operator can effectively specify the required service discipline. The upstream and downstream traffic flows may be specified with different subsets of descriptor components. In particular, the fixed bandwidth parameter is important in a distributed scheduling environment, where it serves to mitigate the communication latency between the network elements hosting, respectively, the scheduler and the traffic queues, and may not be applicable in the downstream direction where scheduling is centralized.

If necessary, two or more traffic flows may be considered as a single aggregate flow. The traffic descriptor of the aggregate flow is constructed by the system from the individual traffic descriptors of the constituent traffic flows. The rate parameters of the aggregate flow traffic descriptor (denoted by an asterisk) are expected to satisfy condition of C.7-4:

$$\begin{aligned} R_F^* + R_A^* &= \sum_j \left(R_F^j + R_A^j\right) \\ \max_j R_M^j \le R_M^* &\le \sum_j R_M^j \end{aligned} \qquad \text{(C.7-4)}$$

where the superscript j denotes a parameter of the jth constituent traffic descriptor. Determination of the parameter values of the aggregate flow traffic descriptor from its constituent traffic descriptors is beyond the scope of this Recommendation.

In the downstream direction, it is the responsibility of the OLT to provide QoS-aware traffic management (including, as applicable, buffer management, traffic scheduling and shaping) of XGEM Port-ID traffic flows based on the respective traffic descriptors, availability of memory and bandwidth resources, and dynamic traffic conditions. Because this function is internal to the OLT, it is beyond the scope of this Recommendation.

In the upstream direction, an aggregate traffic descriptor is constructed for each T-CONT based on the service specifications of the XGEM Port-ID flows multiplexed onto that T-CONT. It is the responsibility of the OLT to provide QoS-aware traffic management of the aggregate traffic flows associated with the T-CONTs based on the respective aggregate service specifications, the upstream bandwidth availability and, possibly, the information obtained through upstream traffic monitoring and/or ONU status reporting. For each individual T-CONT, it is the responsibility of the ONU to which the T-CONT belongs to provide QoS-aware traffic management of the constituent XGEM Port-ID traffic flows based on the respective XGEM Port-ID service specifications, resource availability and dynamic traffic conditions.

The ONU upstream traffic management facilities supporting resource allocation and QoS may include ingress traffic policing, traffic shaping or XGEM Port-ID flow scheduling within a T-CONT. The specification of these functions is beyond the scope of this Recommendation.

The remainder of this clause is concerned specifically with the upstream traffic management, and any reference to provisioned traffic parameters pertains to aggregate traffic descriptors associated with Alloc-IDs.

C.7.2 Dynamic bandwidth assignment overview

Dynamic bandwidth assignment (DBA) in XGS-PON is the process by which the OLT allocates upstream transmission opportunities to the traffic-bearing entities within ONUs, based on dynamic indication of their activity and their configured traffic contracts. The activity status indication can be either explicit through buffer status reporting, implicit through transmission of idle XGEM frames during the upstream transmission opportunities or both.

In comparison with static bandwidth assignment, the DBA mechanism improves XGS-PON upstream bandwidth utilization by reacting adaptively to the ONUs' burst traffic patterns. The practical benefits

Exhibit 1010
IPR2024-00899, USPN 9,806,892
135 of 290

of DBA are twofold. First, the network operator can add more subscribers to the access network due to more efficient bandwidth use. Second, subscribers can enjoy enhanced services, such as those requiring variable rate with peaks extending beyond the levels that can reasonably be allocated statically.

C.7.2.1 DBA abstraction

In XGS-PON, the recipient entity of the upstream bandwidth allocation is represented by an allocation ID (Alloc-ID). Regardless of the number of Alloc-IDs assigned to each ONU, the number of XGEM ports multiplexed onto each Alloc-ID, and the actual physical and logical queuing structure implemented by the ONU, the OLT models the traffic aggregate associated with each subtending Alloc-ID as a single logical buffer. Furthermore, for the purpose of bandwidth assignment, the OLT considers all Alloc-IDs to be independent peer entities on the same level of logical hierarchy.

Figure C.7.1 illustrates DBA abstraction for a XGS-PON.

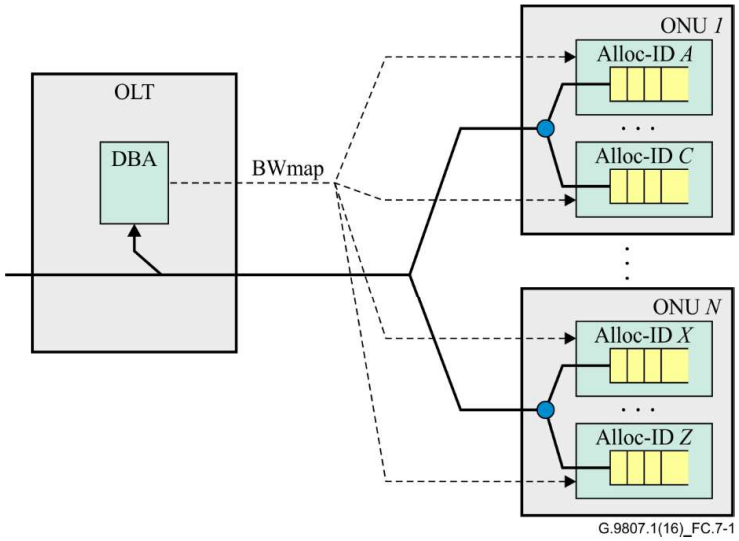

Figure C.7.1 – DBA abstraction for a XGS-PON

For each Alloc-ID logical buffer, the DBA functional module of the OLT infers its occupancy by collecting in-band status reports, or by observing the upstream idle pattern, or both. The DBA function then provides input to the OLT upstream scheduler, which is responsible for generating the bandwidth maps (BWmaps). The BWmap specifies the size and timing of upstream transmission opportunities for each Alloc-ID, and is communicated to the ONUs in-band with the downstream traffic.

C.7.2.2 DBA functional requirements

Dynamic bandwidth assignment in XGS-PON encompasses the following functions. These functions apply on the level of individual Alloc-IDs and their provisioned bandwidth component parameters:

- Inference of the logical upstream transmit buffer occupancy status.
- Update of the instantaneously assigned bandwidth according to the inferred buffer occupancy status within the provisioned bandwidth component parameters.
- Issue of allocations according to the updated instantaneous bandwidth.
- Management of the DBA operations.

The OLT is required to support DBA.

Exhibit 1010
IPR2024-00899, USPN 9,806,892
136 of 290

C.7.2.3 DBA methods

Depending on the ONU buffer occupancy inference mechanism, two DBA methods can be distinguished:

– status reporting (SR) DBA is based on explicit buffer occupancy reports that are solicited by the OLT and submitted by the ONUs in response;

– traffic monitoring (TM) DBA is based on the OLT's observation of the idle XGEM frame pattern and its comparison with the corresponding bandwidth maps.

The XGS-PON OLT shall support a combination of TM and SR DBA methods and be capable of performing the DBA functions of clause C.7.2.2 in an efficient and fair manner. The specific efficiency and fairness criteria can be based on overall XGS-PON bandwidth utilization, the individual ONU's performance, tested against the corresponding objectives, and comparative performance of multiple ONUs.

An XGS-PON ONU shall support DBA status reporting, and shall transmit upstream DBA reports as instructed by the OLT. The status reporting DBA method involves in-band signalling between the OLT and the ONUs, which is an inherent part of the XGS-PON TC specification. SR DBA signalling is discussed in detail in clause C.8.1.2.2.

The algorithmic details of how the OLT applies the reported or inferred status information, the entire specification of the traffic monitoring DBA method, as well as the details of the OLT upstream scheduler, which is responsible for the BWmap generation, are outside the scope of XGS-PON TC layer, and their implementation is left to the OLT vendor.

C.7.3 Reference model of dynamic bandwidth assignment

C.7.3.1 Summary of notations

The following additional notations are employed throughout this clause:

A The amount of traffic arriving to a buffer [bit].

B Logical buffer occupancy [bit].

R Total assigned bandwidth, dynamic [bit/s].

R_G Assigned guaranteed bandwidth, dynamic [bit/s].

R_L Offered traffic load, dynamic [bit/s].

R_{NA} Assigned non-assured bandwidth, dynamic [bit/s].

R_{BE} Assigned best-effort bandwidth, dynamic [bit/s].

S_{NA} Surplus bandwidth available for non-assured assignment, dynamic [bit/s].

S_{BE} Surplus bandwidth available for best-effort assignment, dynamic [bit/s].

Where appropriate, a superscript indicates a specific Alloc-ID.

C.7.3.2 Offered traffic load

Each Alloc-ID can be dynamically characterized by its offered traffic load, $R_L(t)$ (see Equation C.7-5), which is defined as the average rate at which the logical buffer of an Alloc-ID would have to be served in order to be drained in certain fixed time Δ, representing a system constant (equal to at least one, and eight-frame times being suggested):

$$R_L(t) = \frac{B(t) + A(t, t+\Delta)}{\Delta} \tag{C.7-5}$$

where $B(t)$ is the logical buffer occupancy at time t, and the optional term $A(t, t + \Delta)$ represents new arrivals to the buffer during the interval $(t, t + \Delta)$. Note that $A(t, t + \Delta)$ may be excluded from the definition if strictly non-predictive reference is desired.

Exhibit 1010
IPR2024-00899, USPN 9,806,892
137 of 290

C.7.3.3 Components of assigned bandwidth

The bandwidth $R^i(t) \geq 0$, dynamically assigned to Alloc-ID i under the present reference model, is composed of the guaranteed and additional components (see Figure C.7.2). The guaranteed bandwidth, $R^i_G(t)$, can be in the form of fixed bandwidth and assured bandwidth. The additional bandwidth can be either in non-assured form, $R^i_{NA}(t)$, or best effort form, $R^i_{BE}(t)$ (see Equations C.7-6a, C.7-6b and C.7-6c):

$$R^i(t) = R^i_G(t) + R^i_{NA}(t) \tag{C.7-6a}$$

for Alloc-IDs i with χ^i_{AB} = NA,

$$R^i(t) = R^i_G(t) + R^i_{BE}(t) \tag{C.7-6b}$$

for Alloc-IDs i with χ^i_{AB} = BE,

$$R^i(t) = R^i_G(t) \tag{C.7-6c}$$

for Alloc-IDs i with χ^i_{AB} = None.

For the guaranteed bandwidth assignment, the reference model employs a criterion based on the provisioned rate parameters. The fixed portion of the guaranteed bandwidth is assigned statically. The assured portion of the guaranteed bandwidth is assigned dynamically based on the offered load of the specific Alloc-ID. For the additional bandwidth assignment, the reference model supports both a rate-proportional criterion and a criterion based on provisioned priority and weights. The additional bandwidth is assigned dynamically (within the shaded area of Figure C.7.2) based on the offered load of the specific Alloc-ID and the overall traffic conditions.

The reference model effectively introduces a strict priority hierarchy among the forms of assigned bandwidth:

- Fixed bandwidth (highest priority).
- Assured bandwidth.
- Non-assured bandwidth.
- Best effort bandwidth (lowest priority).

First, the OLT should assign the fixed bandwidth to all Alloc-IDs, regardless of their individual offered loads and the overall traffic conditions. Then the OLT completes the guaranteed bandwidth component assignment by allocating assured bandwidth to each Alloc-ID until either the respective provisioned level R_A is reached or the traffic demand is satisfied. After that, the OLT allocates non-assured bandwidth components to the eligible unsaturated Alloc-IDs until either all the Alloc-IDs reach their saturation level (that is, the lesser of the respective maximum bandwidth R_M and offered load $R_L(t)$), or the surplus bandwidth pool $S_{NA}(t)$ is exhausted. Finally, the OLT allocates best-effort bandwidth components to the eligible unsaturated Alloc-IDs.

The reference model requires that, for all Alloc-ID i, at all times when the offered traffic load $R^i_L(t)$ exceeds the provisioned fixed level R^i_F, the assigned bandwidth $R^i(t)$ should satisfy the conservation condition expressed in C.7-7:

$$R^i(t) \leq \min\left\{R^i_M; R^i_L(t)\right\} \tag{C.7-7}$$

C.7.3.4 Guaranteed bandwidth assignment

As long as the basic stability condition expressed in C.7-3 is satisfied, the guaranteed component of the dynamically assigned bandwidth is given by Equation C.7-8:

Exhibit 1010
IPR2024-00899, USPN 9,806,892
138 of 290

$$R_G^i(t) = \min\left\{R_F^i + R_A^i; \max\left\{R_F^i; R_L^i(t)\right\}\right\} \quad \text{(C.7-8)}$$

$R^i{}_G(t)$ is available to the given Alloc-ID regardless of the overall traffic load conditions. Thus, $R^i{}_F$ is the lower bound on assigned guaranteed bandwidth $R^i{}_G(t)$, and $R^i{}_A + R^i{}_F$ is the upper bound.

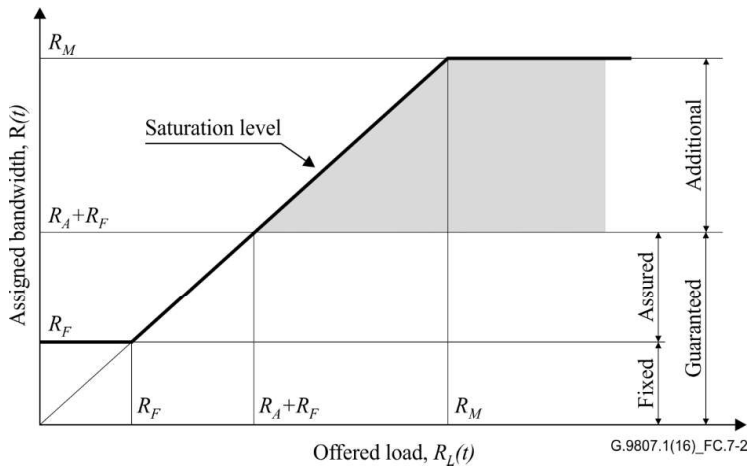

Figure C.7.2 – Assigned bandwidth components with respect to offered load

C.7.3.5 Rate-proportional assignment of additional bandwidth

To realize the rate-proportional assignment of the additional bandwidth, the Alloc-IDs are provisioned with appropriate individual $R^i{}_F$, $R^i{}_A$ and $R^i{}_M$ parameters. The priority and weight parameters for all Alloc-IDs are set to identical values. The additional bandwidth eligibility can be provisions to either value (NA, BE or none).

Non-assured bandwidth, R_{NA}, is a form of additional bandwidth that the OLT may dynamically assign to an eligible Alloc-ID in proportion to the sum of that Alloc-ID's fixed and assured bandwidths.

The amount of surplus bandwidth that can participate in the non-assured bandwidth assignment is equal to the portion of the uplink capacity that remains available after the guaranteed bandwidth components have been dynamically assigned for all Alloc-IDs. This amount is given by the Equation C.7-9:

$$S_{NA}(t) = C - \sum_i R_G^i(t) \quad \text{(C.7-9)}$$

where $R^i{}_G(t)$ is specified by Equation C.7-8.

The surplus bandwidth $S_{NA}(t)$ is shared among the eligible (χ_{AB} = NA) Alloc-IDs so that:

1) the bandwidth conservation condition C.7-7 holds, and either

   2.1) for each Alloc-ID i, the assigned bandwidth satisfies the saturation criterion expressed in C.7-10:

$$R^i(t) = \min\left\{R_M^i; \max\left\{R_L^i(t); R_F^i\right\}\right\} \quad \text{(C.7-10)}$$

   or

2.2) $S_{NA}(t)$ is exhausted and at most one Alloc-ID remains unsaturated, or

2.3) $S_{NA}(t)$ is exhausted and for any two eligible unsaturated Alloc-IDs i and j, the assigned non-assured bandwidths satisfy the fairness condition expressed in C.7-11:

Exhibit 1010
IPR2024-00899, USPN 9,806,892
139 of 290

$$\frac{R_{NA}^{i}(t)}{R_{F}^{i}+R_{A}^{i}}=\frac{R_{NA}^{j}(t)}{R_{F}^{j}+R_{A}^{j}} \tag{C.7-11}$$

Best-effort bandwidth is a form of additional bandwidth that the OLT may dynamically assign to an eligible Alloc-ID in proportion to the non-guaranteed portion of that Alloc-ID's provisioned maximum bandwidth.

The Alloc-IDs eligible for the best-effort assignment receive additional bandwidth only if all the Alloc-IDs eligible for the non-assured assignment have been saturated. The amount of surplus bandwidth that can participate in the best-effort bandwidth assignment is equal to the portion of the uplink capacity that remains available after all the Alloc-IDs eligible for the non-assured bandwidth assignment have been saturated, and all the other Alloc-IDs have been assigned their respective guaranteed bandwidth components. This amount is given by the Equation C.7-12:

$$S_{BE}(t)=C-\sum_{i\in\{\chi_{AB}^{i}=NA\}}R^{i}(t)-\sum_{i\in\{\chi_{AB}^{i}\neq NA\}}R_{G}^{i}(t) \tag{C.7-12}$$

Here $R^{i}_{G}(t)$ is specified by Equation C.7-8, and $R^{i}(t)$ by the saturation criterion (C.7-10).

The surplus bandwidth $S_{BE}(t)$ is shared among the eligible (χ_{AB} = BE) Alloc-IDs so that:

1) the bandwidth conservation condition C.7-7 holds, and either

2.1) for each Alloc-ID i, the assigned bandwidth satisfies the saturation criterion C.7-10,

or:

2.2) $S_{BE}(t)$ is exhausted and at most one Alloc-ID remains unsaturated, or

2.3) $S_{BE}(t)$ is exhausted and for any two eligible unsaturated Alloc-IDs i and j, the assigned best-effort bandwidths satisfy the fairness condition expressed in C.7-13:

$$\frac{R_{BE}^{i}(t)}{R_{M}^{i}-\left(R_{F}^{i}+R_{A}^{i}\right)}=\frac{R_{BE}^{j}(t)}{R_{M}^{j}-\left(R_{F}^{j}+R_{A}^{j}\right)} \tag{C.7-13}$$

C.7.3.6 Additional bandwidth assignment based on priority and weights

To realize the additional bandwidth assignment based on priority and weights, the Alloc-IDs are provisioned with appropriate individual P_i and ω_i parameters. The bandwidth parameters for all Alloc-IDs within each P_i level are set to identical values. The additional bandwidth eligibility can be provisions to either BE or none.

The amount of surplus bandwidth that can participate in the best-effort bandwidth assignment is equal to the portion of the uplink capacity that remains available after the guaranteed bandwidth components have been dynamically assigned for all Alloc-IDs. This amount is given by the Equation C.7-14:

$$S_{BE}(t)=C-\sum_{i}R_{G}^{i}(t) \tag{C.7-14}$$

where $R^{i}_{G}(t)$ is specified by Equation C.7-8.

The surplus bandwidth $S_{BE}(t)$ is shared among the eligible (χ_{AB} = BE) Alloc-IDs so that:

1) the bandwidth conservation condition C.7-7 holds, and either

2.1) for each Alloc-ID i, the assigned bandwidth satisfies the saturation criterion (C.7-10),

or

2.2) $S_{BE}(t)$ is exhausted and the following two statements hold:

Exhibit 1010
IPR2024-00899, USPN 9,806,892
140 of 290

as long as at least one eligible Alloc-ID i with provisioned priority level P_i remains unsaturated, the assigned best-effort bandwidth share of any Alloc-ID with a logically lower provisioned priority level is zero;

as long as two eligible Alloc-IDs i and j with identical provisioned priority levels $P_i = P_j$ remain unsaturated, their assigned best-effort bandwidth shares satisfy the fairness condition C.7-15:

$$\frac{R_{BE}^{i}(t)}{\omega_i} = \frac{R_{BE}^{j}(t)}{\omega_j} \qquad \text{(C.7-15)}$$

C.7.3.7 Timing control of assigned bandwidth

The optional timing parameters of the extended traffic descriptor allow access network operators to control the temporal aspect of the process that allocates transmission opportunities to the traffic flows based on the assigned bandwidth, thus improving throughput and facilitating support of the delay/jitter-sensitive applications.

Once the assigned bandwidth of a traffic flow is obtained using the rate-based model, the jitter tolerance parameter, T_{JT}, effectively determines the frequency of grant allocation to the given flow. For the traffic flows that are not sensitive to delay and jitter, the larger T_{JT} stipulates fewer bursts and reduces losses to the burst mode overhead. For the delay/jitter sensitive applications, the shorter T_{JT} increases the frequency of burst allocations, reducing delay and jitter at the expense of diminished overall upstream throughput due to the extra burst mode overhead. The resulting trade-off is subject to evaluation by the operator.

The bandwidth assignment delay tolerance parameter, T_{BDT}, effectively determines the frequency of grant allocation to a traffic flow that has shown zero or low offered load in the upstream direction. Such grants are needed to execute status reporting and traffic monitoring DBA methods.

The implementations are expected to support timing parameter configurability based on a finite set of representative values, rather than on a continuous value range.

C.7.4 DBA performance requirements

In practice, the OLT DBA algorithm does not have complete knowledge of the system state. In particular, instead of the true offered loads $R_L^i(t)$, it operates on the basis of estimates, $\hat{R}_L^i(t)$, which are obtained from the DBRu reports and traffic monitoring results by methods outside the scope of this Recommendation. This clause recommends several DBA performance criteria that allow to evaluate a practical DBA implementation against the reference model of clause C.7.3.

C.7.4.1 Stationary bandwidth assignment

In a system where Alloc-ID activity and traffic demand status remain constant, the assigned bandwidth to an Alloc-ID is measured as an average over the BWmaps transmitted in any sequence of K consecutive downstream frames, where K is chosen large enough to average the allocations that may vary from frame to frame.

Target performance

The OLT DBA algorithm should ensure that the stationary assigned bandwidth for each subtending unsaturated Alloc-ID is at least equal to the respective fixed plus assured bandwidth and is within specified bounds (e.g., 10%) of the dynamic value computed, based on the reference model of clause C.7.3.

Exhibit 1010
IPR2024-00899, USPN 9,806,892
141 of 290

C.7.4.2 Assured bandwidth restoration time

This is the worst-case time interval, as observed at the ONU, from the moment an Alloc-ID, which is entitled to receive assured bandwidth assignment but has not been receiving it due to insufficient traffic demand, increases the traffic demand to at least its fixed plus assured level, to the moment it is granted the full provisioned assured bandwidth in addition to the fixed bandwidth. The ending moment of the interval is more precisely defined as the start of the first upstream frame in a sequence of K consecutive frames, sufficiently large to average the frame-to-frame variations, over which the average bandwidth allocated to the Alloc-ID meets the specified condition.

Target performance

A few milliseconds is expected (target of 2 ms).

C.7.4.3 DBA convergence time

This is the worst-case time interval from the moment of a single activity status or traffic load change event at any ONU in a previously stationary system, to the moment the OLT adjusts its bandwidth assignments for all the subtending unsaturated ONUs to the levels that are at least equal to the respective fixed plus assured bandwidths, and are within specified bounds (e.g., 20%) of the respective dynamic values computed based on the reference model of clause C.7.3. The ending moment of the interval is more precisely defined as the start of the first downstream frame in a sequence of K consecutive frames, sufficiently large to average the frame-to-frame variations, in which the transmitted BWmaps contain bandwidth allocations satisfying the specified condition on average.

Target performance

Ten milliseconds is expected (target of 6 ms).

C.8 XGS-PON transmission convergence framing sublayer overview

This clause specifies the structure of the downstream FS frame and upstream FS burst along with the format of the downstream FS frame header, downstream FS frame trailer, upstream FS burst header and upstream FS burst trailer. Clause C.8.1 provides the XGS-PON TC framing sublayer specification.

C.8.1 XGS-PON transmission convergence framing sublayer

C.8.1.1 Downstream XGS-PON TC framing

The downstream FS frame size is 135 432 bytes.

The downstream FS frame consists of the downstream FS header, FS payload section and FS trailer. The FS payload is formed on the transmit side (OLT) and is processed on the receive side (ONU) by the corresponding XGS-PON TC service adaptation sublayer entity (see clause C.9.1.1 for discussion of FS payload). The downstream FS frame header consists of a fixed size HLend structure and two variable size partitions: the bandwidth map partition (BWmap) and downstream PLOAM partition (PLOAMd). Figure C.8.1illustrates downstream FS frame format and header fields.

Exhibit 1010
IPR2024-00899, USPN 9,806,892
142 of 290

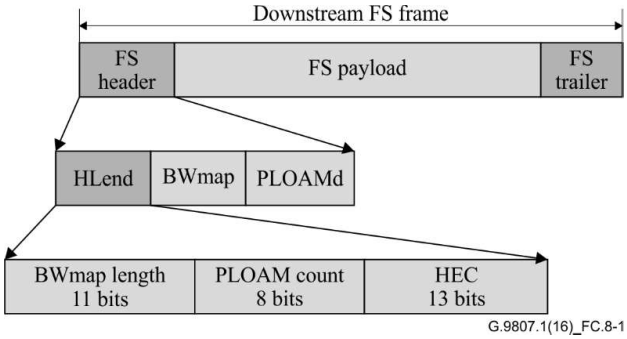

Figure C.8.1 – Downstream FS frame format and header fields

C.8.1.1.1 HLend structure

HLend is a 4-byte structure that controls the size of the variable length partitions within the downstream FS header. It consists of three fields:

– **BWmap length [11 bits]**: contains an unsigned integer, *N*, indicating the number of allocation structures in the BWmap partition.

– **PLOAM count [8 bits]**: contains an unsigned integer, *P*, indicating the number of PLOAM messages in the PLOAMd partition.

– **Hybrid error correction (HEC) [13 bits]**: an error detection and correction field for the HLend structure, which is a combination of a truncated BCH(63, 12, 2) code operating on the 31 initial bits of the HLend structure and a single parity bit. The details of the HEC construction and verification are specified in Annex C.A.

C.8.1.1.2 BWmap partition

The BWmap is a series of 8-byte allocation structures. The number of allocation structures in BWmap is given in the BWmap length field of the HLend structure. The actual length of the BWmap partition is 8 × *N* bytes.

Each allocation structure specifies a bandwidth allocation to a particular Alloc-ID. A sequence of one or more allocation structures that are associated with the Alloc-IDs that belong to the same ONU and are intended for contiguous upstream transmission form a burst allocation series. The formats of the BWmap partition and an allocation structure are shown in Figure C.8.2. The fields of the allocation structure are further explained in the following clauses.

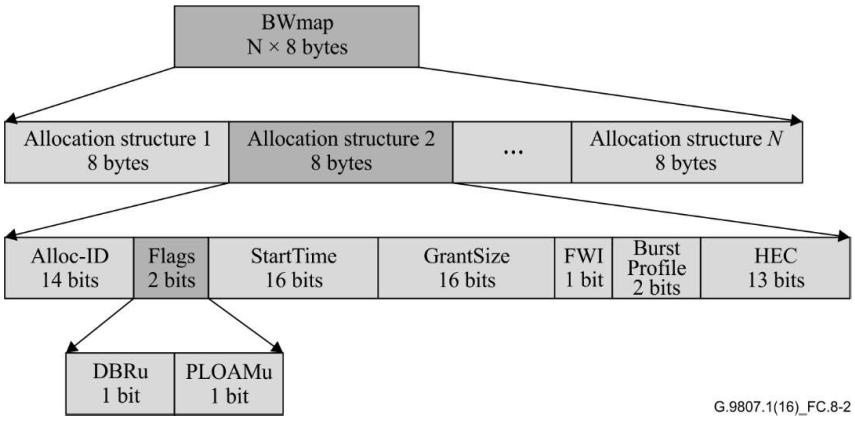

Figure C.8.2 – BWmap partition and the format of an allocation structure

Exhibit 1010
IPR2024-00899, USPN 9,806,892
143 of 290

C.8.1.1.2.1 Alloc-ID field

The allocation ID field contains the 14-bit number that indicates the recipient of the bandwidth allocation, i.e., a particular T-CONT or the upstream OMCC of an ONU. Alloc-ID values and conventions are specified in clause C.6.1.5.7.

C.8.1.1.2.2 Flags field

The 2-bit Flags field that contains two separate indicators:

– DBRu: If this bit is set, the ONU should send the DBRu report for the given Alloc-ID. If the bit is not set, the DBRu report is not transmitted.

– PLOAMu: If this bit is set in the first allocation structure of a burst allocation series (as indicated by StartTime field – see clause C.8.1.1.2.3), the size of the upstream FS burst header should be 52 bytes, and the ONU should transmit a PLOAM message as a part of the FS burst header. If in the first allocation structure of an upstream burst, the PLOAMu bit is not set, the size of the upstream FS burst header should be 4 bytes, and the PLOAM message should not be transmitted. For all subsequent allocation structures of the same burst, the PLOAMu flag should be set to 0 by the transmitter and ignored by the receiver. See clause C.8.1.2.1 for the details of the upstream FS burst header.

C.8.1.1.2.3 StartTime field

The StartTime field contains a 16-bit number that indicates the location of the first byte of the upstream FS burst within the upstream PHY frame. StartTime is measured from the beginning of the upstream PHY frame. It assumes the integer values in the range from 0 to 9 719 and refers to 9720 equally spaced time instants within the upstream PHY frame. The interval between the two adjacent time instants specified by the consecutive values of StartTime can accommodate a 4-byte word at 2.48832 Gbit/s nominal upstream line rate, or a 16-byte block at 9.95328 Gbit/s nominal upstream line rate. The association of the given value of StartTime with a particular time instant within the upstream PHY frame remains invariant to the ONU's supported line rate.

In each burst allocation series, only the first allocation carries a specific StartTime value. All the remaining allocation structures of the burst allocation series carry the StartTime value of 0xFFFF.

Figure C.8.3 illustrates interpretation of StartTime and GrantSize parameters.

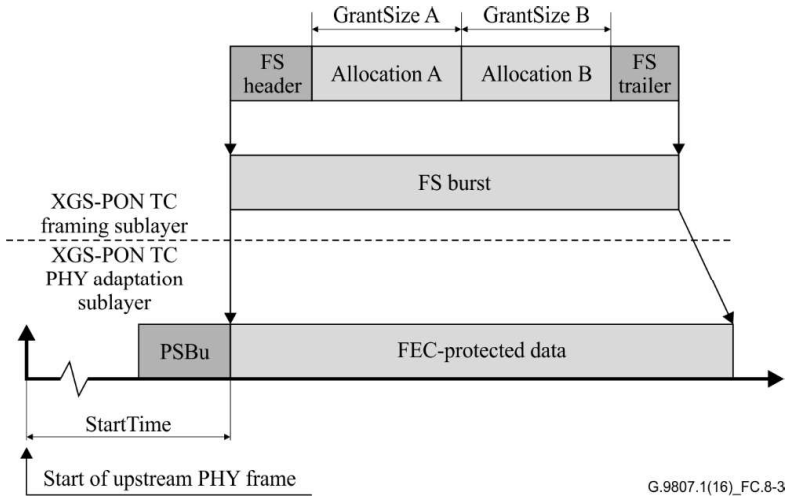

Figure C.8.3 – Interpretation of StartTime and GrantSize parameters

Note that the start of upstream PHY frame is just a reference point that is not associated with any externally observable event (unlike the start of the downstream PHY frame which is bound to

Exhibit 1010
IPR2024-00899, USPN 9,806,892
144 of 290

transmission or receipt of the first bit of the PSync sequence). Note further that the OLT and each ONU associate the start of upstream PHY frame with generally different moments in time. See clause C.13 for the details of the timing relationships within a XGS-PON channel.

C.8.1.1.2.4 GrantSize field

The GrantSize field contains the 16-bit number that indicates the combined length of the FS payload data with DBRu overhead transmitted within the given allocation. (Notably, GrantSize does not include upstream FS header, FS trailer or FEC overhead.)

The granularity of the GrantSize field varies with the upstream line rate: for the ONUs transmitting at 2.48832 Gbit/s nominal upstream line rate, the GrantSize refers to four-byte words; for the ONUs transmitting at 9.95328 Gbit/s nominal upstream line rate, the GrantSize refers to 16-byte blocks. The value of GrantSize is equal to zero for the PLOAM-only grants, including serial number grants and ranging grants used in the process of ONU activation.

For an ONU transmitting at 2.48832 Gbit/s nominal upstream line rate, the minimum possible non-zero value of GrantSize is 1, which corresponds to a single word (4 byte) allocation for a DBRu-only transmission; the minimum allocation for FS payload proper (DBRu flag not set) is 4 words (i.e., 16 bytes), in which case GrantSize = 4. For an ONU transmitting at 9.95328 Gbit/s nominal upstream line rate, the GrantSize of 1 is used for both the DBRu-only transmission (4-byte DBRu field followed by a 12-byte idle), and for minimum-size payload allocation (16 bytes).

C.8.1.1.2.5 Forced wake-up indication (FWI) bit

When addressing an ONU that supports the protocol-based power management, the OLT sets the FWI bit to expedite waking up an ONU that has been saving power. See clause C.16 for the details of the ONU power management. When required by the OLT power management state machine, the FWI bit is set in the first allocation structure of each burst allocation series to a given ONU. The value of the FWI bit in the subsequent allocations structures of a burst allocation series is not controlled and is ignored by the ONU.

C.8.1.1.2.6 BurstProfile field

The BurstProfile field is a 2-bit field that contains the index of the burst profile to be used by the XGS-PON TC PHY adaptation sublayer of the ONU to form the PHY burst. This index refers to the set of valid burst profiles that is communicated to the ONUs by the broadcast or unicast transmissions over the PLOAM messaging channel. For each specified burst profile, the index is explicitly defined in the Burst_Profile PLOAM message (see clause C.11.3.3.1).

C.8.1.1.2.7 HEC field

The error detection and correction field for the allocation structure is a combination of a BCH(63, 12, 2) code operating on the 63 initial bits of the allocation structure and a single parity bit. The details of the HEC construction and verification are specified in Annex C.A.

C.8.1.1.3 BWmap construction and parsing rules

The OLT uses BWmap partition to allocate upstream transmission opportunities to the ONUs and the individual Alloc-IDs within each ONU. The frequency and size of allocations to each ONU and each Alloc-ID depends on the respective service parameters and the current power management mode of each given ONU. By design, each BWmap partition may contain at most 2 047 allocation structures. There are, however, additional restrictions that the OLT should meet while constructing the BWmap in every PHY frame:

1) The OLT is required to specify the multiple distinct burst allocation series in the BWmap in the ascending order of their StartTime values.

2) The spacing of adjacent bursts in a BWmap and between the consecutive BWmaps should satisfy the PHY layer requirements detailed in clause C.10.1.2.

Exhibit 1010
IPR2024-00899, USPN 9,806,892
145 of 290

3) The minimum StartTime value is zero and is invariant to the ONU's upstream line rate. This requirement implies that the PSBu portion of an upstream PHY burst can technically belong to the previous PHY frame.

4) The maximum StartTime value is 9 719 and is invariant to the ONU's upstream line rate. This requirement implies that an ONU burst can cross the PHY frame boundary.

5) The maximum number of allocation structures per BWmap is 512.

6) The maximum number of allocation structures per a burst allocation series is 16.

7) The maximum number of allocation structures per given ONU in a BWmap is 64.

8) The maximum number of burst allocation series per given XGS-PON ONU in a BWmap is 16.

   (Note that the maximum number of burst allocation series per given XG-PON ONU in a BWmap is 4 as defined in clause 8.1.3.1 of [ITU-T G.987.3]).

9) The maximum GrantSize value of any individual allocation (see Note below):
   - for 2.48832 Gbit/s nominal upstream rate – 9 718 (referring to 4-byte words);
   - for 9.95328 Gbit/s nominal upstream rate – 9 719 (referring to 16-byte blocks).

10) The maximum FS burst size, that is, the sizes of all allocations within the burst allocation series together with the FS burst overhead (see Note below):
    - for 2.48832 Gbit/s nominal upstream rate – 38 880 bytes;
    - for 9.95328 Gbit/s nominal upstream rate – 155 520 bytes.

11) The FS burst specification is subject to the constraint:
    - StartTime + Σ_n $GrantSize_n \leq 14\ 580$.

NOTE – The maximum framing sublayer burst size has been set not to exceed 38 880 bytes for 2.48832 Gbit/s nominal upstream rate, and 155 520 bytes, for 9.95328 Gbit/s nominal upstream rate (9 720 four-byte words or 16-byte blocks, respectively). The largest theoretically possible GrantSize is derived taking into consideration the size of the fixed framing sublayer overhead (a 4-byte header without PLOAMu field and a 4-byte trailer). While FS bursts can cross the nominal PHY frame boundaries, the added constraint imposes a reasonable limit on how far a FS burst defined in one PHY frame can extend into the subsequent PHY frame.

Allocating of either consecutive or closely spaced PHY bursts to the same ONU is not necessary and is not a recommended practice. As a guidance, the OLT may maintain the spacing between bursts allocated to the same ONU equal to at least as much as would be required for two bursts allocated to the different ONUs plus an extra processing margin of 512 bytes. It is the responsibility of the OLT to ensure that the ONU can handle the allocation of closely spaced bursts.

Note that the maximum number of burst allocation series per a BWmap is not a relevant design parameter and hence is not mandated here.

In general, the ONU should handle any uncorrectable, errored or dubious BWmap entries in such a way as to minimize the probability of upstream collision, suppressing transmission whenever necessary. The following specific cases apply:

– If the ONU detects an uncorrectable bit error within an allocation structure, it should suppress transmission for the remainder of the burst.

– If the ONU detects a violation of rule 4 of clause C.8.1.1.3, it should not transmit a burst.

– If the ONU detects a violation of rules 5 to 11 of clause C.8.1.1.3, it should cut the transmission short as if the respective BWmap construction rules were satisfied.

– If the ONU detects that it is allocated two or more consecutive or closely spaced bursts that the ONU cannot properly process, it should not transmit the subsequent burst or bursts.

– If the ONU detects an unknown Alloc-ID within its burst allocation series, it should suppress transmission of the remainder of the burst.

Exhibit 1010
IPR2024-00899, USPN 9,806,892
146 of 290

– If the ONU detects its own Alloc-ID within a burst series of another ONU, it should ignore the condition and should not attempt to transmit.

C.8.1.1.4 PLOAMd partition

The PLOAMd partition contains zero, one or more PLOAM messages. The length of each PLOAM message is 48 bytes. The number of PLOAM messages in the PLOAMd partition is given by the PLOAM count field of the HLend structure. The actual length of the PLOAMd partition is 48 × *P* bytes.

The PLOAM message format and the constraints on the PLOAM messaging channel are specified in clause C.11. Figure C.8.4 shows downstream PLOAM partition.

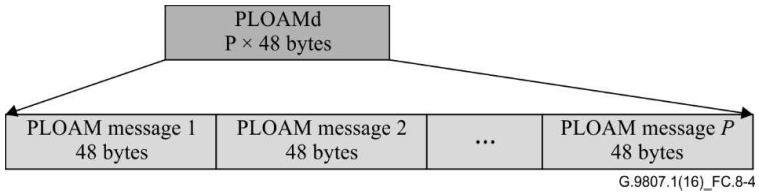

Figure C.8.4 – Downstream PLOAM partition

C.8.1.1.5 FS frame trailer

The downstream FS frame trailer contains a 4-byte field*, with contents set at the discretion of the OLT*. XGS-PON downstream FEC is statically configured as ON and the ONU uses the FEC correction results to obtain the BER of the optical link. To support TDMA coexistence with XG-PON, the XGS-PON OLT avoids ending the FS payload section with a short idle XGEM frame.

C.8.1.2 Upstream XGS-PON TC framing

In the upstream direction, the interface between the XGS-PON TC framing sublayer and the XGS-PON TC PHY adaptation sublayer is represented by an upstream FS burst. The upstream FS burst transmitted by a given ONU has a dynamically determined size and consists of the upstream FS burst header, one or more bandwidth allocation intervals, each being associated with a specific Alloc-ID, and the FS trailer, as shown in Figure C.8.5. The size of each allocation interval is dictated by a specific allocation structure of the BWmap.

Each bandwidth allocation interval contains the FS payload section and may contain the allocation overhead that precedes the FS payload. The FS payload is formed on the transmit side (ONU) and is processed on the receive side (OLT) by the corresponding XGS-PON TC service adaptation sublayer entity (see clause C.9.1.1 for discussion of FS payload).

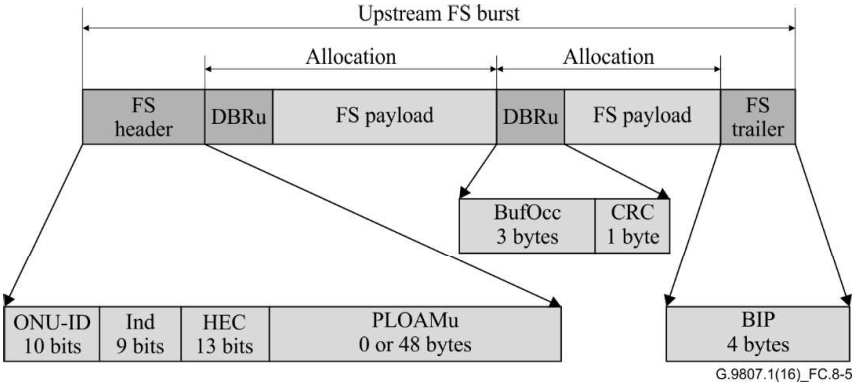

Figure C.8.5 – Upstream FS burst format and overhead fields

Exhibit 1010
IPR2024-00899, USPN 9,806,892
147 of 290

C.8.1.2.1 Upstream FS header

The upstream FS header includes a 4-byte fixed section and a non-fixed section. The fixed section consists of ONU-ID, Ind and HEC. The non-fixed section has either zero bytes or a 48-byte PLOAM message, depending on the value of the PLOAMu flag of the corresponding BWmap allocation structure.

C.8.1.2.1.1 ONU-ID field

The ONU-ID field is a 10-bit field that contains the unique ONU-ID of the ONU that is transmitting the burst. The ONU-ID is assigned to the ONU during activation. The OLT can check this field against the BWmap in effect to confirm that the correct ONU is transmitting.

If the ONU which has not been assigned ONU-ID responds to a SN grant in order to announce its presence on the PON, it shall use the unassigned value 0x03FF in place of the ONU-ID in the FS burst header (see clause C.6.1.5.6 for discussion of ONU identifier).

C.8.1.2.1.2 Ind field

The Ind field has 9 bits that provide fast unsolicited signalling of the ONU status and are allocated as follows.

– **Bit 8 (MSB): PLOAM queue status**: When set, this bit provides an indication that the ONU's queue of pending upstream PLOAM messages remains non-empty after the current burst is transmitted. If this bit is not set, no additional upstream PLOAMu messages are awaiting transmission.

– **Bits 7 – 1: Reserved**.

– **Bit 0 (LSB): Dying gasp (DG)**: When this bit is set, it indicates that the ONU has detected a local condition that may prevent the ONU from responding to upstream bandwidth allocations. This indication may assist the OLT in distinguishing fibre plant problems from premises issues. Sending a DG indication does not necessarily constitute a commitment or intent on the part of ONU to cease transmitting. If the condition that has led to DG indication does not persist, the ONU revokes the indication and continues operation. The OLT should not interpret the DG indication by itself as the grounds to withdraw bandwidth allocations to the given ONU.

C.8.1.2.1.3 HEC field

The error detection and correction field for the upstream FS header is a combination of a truncated BCH(63, 12, 2) code operating on the 31 initial bits of the header and a single parity bit. The details of the HEC construction and verification are specified in Annex C.A.

C.8.1.2.1.4 Upstream PLOAM (PLOAMu) field

If present, the PLOAMu field contains exactly one PLOAM message. The presence of the PLOAM message is controlled by the OLT with the PLOAMu flag of the first allocation structure in the burst allocation series. The PLOAM message length is 48 bytes. The PLOAM message format is given in clause C.11.

C.8.1.2.2 Allocation overhead

If present, the allocation overhead is composed of the DBRu structure. The presence of the DBRu is controlled by the OLT with the DBRu flag of the corresponding allocation structure within the BWmap. The 4-byte DBRu structure carries a buffer status report which is associated with a specific Alloc-ID.

Exhibit 1010
IPR2024-00899, USPN 9,806,892
148 of 290

C.8.1.2.2.1 BufOcc field

The buffer occupancy (BufOcc) field is 3 bytes long and contains the total amount of SDU traffic, expressed in 4-byte units, aggregated across all the buffers associated with the Alloc-ID to which the given allocation has been provided. If an individual SDU has the length L bytes, its contribution W towards the reported buffer occupancy is computed as expressed in C.8-1:

$$W = \begin{cases} \left\lceil \frac{L}{4} \right\rceil, & \text{if } L > 8 \\ 2, & \text{if } 0 < L \leq 8 \end{cases} \qquad \text{(C.8-1)}$$

The reported value should represent the best available estimate that corresponds to the moment of time when the report is transmitted, that is, to the start of the upstream allocation interval. The reported value should be inclusive of any traffic that may have been scheduled for upstream transmission within this allocation interval.

While the length L of an individual SDU is a natural number, the BufOcc field needs to encode two special values: 0x000000 denotes an empty buffer, and 0xFFFFFF represents an invalid measurement.

C.8.1.2.2.2 CRC field

The DBRu structure is protected using a CRC-8, using the same polynomial as in [ITU-T I.432.1] ($g(x) = x^8 + x^2 + x + 1$). Unlike [ITU-T I.432.1], however, the CRC is not exclusive-OR-ed with 0x55. The receiver of the DBRu field implements the error detecting and correcting functions of the CRC-8. If the CRC-8 indicates that an uncorrectable error has occurred, then the information in the DBRu is discarded.

C.8.1.2.3 Upstream FS burst trailer

The upstream FS burst trailer contains a 4-byte wide bit-interleaved even parity (BIP) field computed over the entire FS burst. The OLT receiver verifies the BIP to estimate the BER on the upstream optical link. Note that the BIP-based BER estimate is applicable only when the FEC is turned off. Whenever upstream FEC is turned on in the PHY adaptation sublayer, the BER estimate should instead be obtained based on the FEC correction results.

C.8.2 PtP WDM management framing sublayer

Not applicable to XGS-PON.

C.9 XGS-PON encapsulation method

C.9.1 XGEM framing

C.9.1.1 FS payload structure

The FS payload section is carried in the downstream FS frames and upstream FS bursts as shown in Figure C.6.1 and Figure C.6.2. The size of the FS payload in a given downstream FS frame is equal to the FS frame size (which is fixed 135 432 bytes) less the sum of the sizes of its FS frame header and FS frame trailer. The size of each FS payload section in a given upstream burst is equal to the size of the respective allocation less the allocation overhead. The FS payload contains one or more XGEM frames (see Figure C.9.1).

Exhibit 1010
IPR2024-00899, USPN 9,806,892
149 of 290

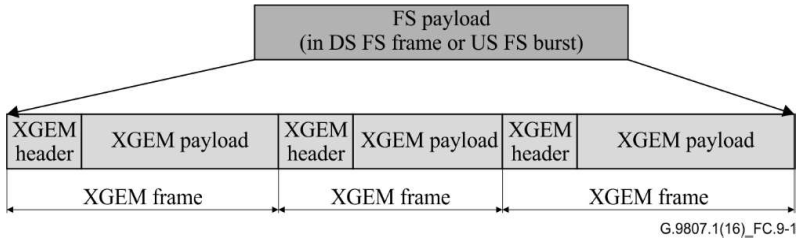

Figure C.9.1 – Structure of FS payload

Each XGEM frame contains a fixed size XGEM header and a variable size XGEM payload field.

C.9.1.2 XGEM frame header

The size of the XGEM header is 8 bytes. The format of the XGEM header is shown in Figure C.9.2.

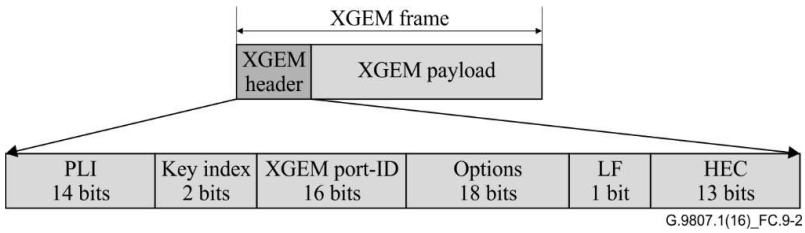

Figure C.9.2 – XGEM header format

The XGEM header has the following fields:

- **Payload length indication (PLI)** [14 bits]: The length *L*, in bytes, of a SDU or a SDU fragment in the XGEM payload following the XGEM header. The 14-bit field allows to represent an integer from 0 to 16 383, and, therefore, is sufficient to encode the length of an expanded Ethernet frame (up to 2 000 bytes) as well as a jumbo Ethernet frame (up to 9 000 bytes). The value of the PLI is accurate to a single byte and is not necessarily equal to the size of the XGEM payload which is aligned at the 4-byte word boundaries.
- **Key index** [2 bits]: The indicator of the data encryption key used to encrypt the XGEM payload. Depending on the XGEM Port-ID, the key index refers either to unicast or to broadcast key type. With up to two keys of each type being valid at any given time, the key index value of 01 refers to the first key, while the value of 10 refers to the second key. The value of 00 indicates that the payload is transmitted without encryption; the value of 11 is reserved for future use. If the key index of a XGEM frame contains a reserved value or points to an invalid key (see clause C.15.5), the payload of the XGEM frame is discarded.
- **XGEM port-ID** [16 bits]: The identifier of XGEM port to which the frame belongs.
- **Options** [18 bits]: The use of this field remains for further study. The field is set to 0x00000 by the transmitter and ignored by the receiver.
- **Last fragment (LF)** [1 bit]: The last fragment indicator. If the fragment encapsulated into the XGEM frame is the last fragment of a SDU or a complete SDU, the LF bit is set to 1; otherwise, LF bit is 0.
- **Hybrid error correction (HEC)** [13 bits]: The error detection and correction field for the XGEM header, which is a combination of a BCH(63, 12, 2) code operating on the 63 initial bits of the header and a single parity bit. The details of the HEC construction and verification are specified in Annex C.A.

Exhibit 1010
IPR2024-00899, USPN 9,806,892
150 of 290

C.9.1.3 XGEM payload format

The XGEM payload is a variable-length field controlled by the PLI field of the XGEM header. For a non-idle XGEM frame, the length P of the XGEM payload, in bytes, is related to value L, transmitted in the PLI field as expressed in C.9-1:

$$P = \begin{cases} 4 \times \left\lceil \frac{L}{4} \right\rceil, & \text{if } L \geq 8 \\ 8, & \text{if } 0 < L < 8 \\ 0, & \text{if } L = 0 \end{cases}$$

The XGEM payload may contain one to seven bytes of padding in its least significant byte positions. The transmitter fills the padding bytes with 0x55. The padding bytes are discarded by the receiving XGEM engine. Figure C.9.3 illustrates XGEM payload format.

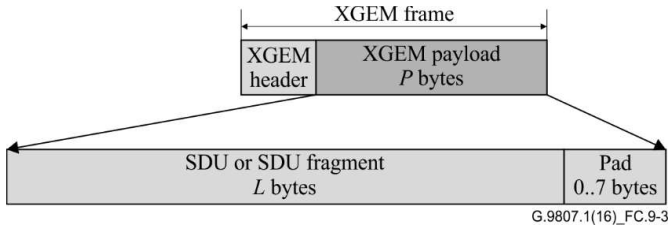

Figure C.9.3 – XGEM payload format

C.9.1.4 Idle XGEM frame

Whenever a transmitter has no SDUs or SDU fragments to send (this includes the case when the SDUs are ineligible for transmission as determined by a non-work-conserving scheduler), or the size of the SDU or SDU fragment exceeds the available FS payload section space but fragmenting it would violate the rules of clause C.9.3, the transmitter shall generate idle XGEM frames to fill the available FS payload section space.

An idle XGEM frame is any XGEM frame with the value of XGEM port-ID equal to 0xFFFF.

The PLI field of an idle XGEM frame contains the actual size of the frame payload, which may be equal to any multiple of 4, including 0, up to the maximum supported SDU size.

The idle XGEM frames are transmitted unencrypted with Key_Index indicating no encryption and LF = 1. The receiver ignores the Key_Index and LF fields of the header and the payload of the XGEM frame with XGEM port-ID of 0xFFFF.

The XGEM payload content of an idle XGEM frame is formed by the transmitter at its own discretion with the necessary considerations given to the line pattern control and CID prevention. The idle XGEM frame payload is discarded by the receiver.

If the available space at the end of FS payload section is less than the XGEM header size (i.e., is equal to 4 bytes), the transmitter shall generate a short idle XGEM frame, which is defined as four all-zero bytes.

The OLT transmitter avoids ending the FS payload section with a short idle XGEM frame. This enables compatibility with ONUs using XG-PON components. The XG-PON ONU TC layer implementation interprets the FS trailer (BIP) as a short idle XGEM frame, which it ignores.

C.9.2 XGEM frame delineation

The delineation process in XGS-PON relies upon the presence of a XGEM header at the beginning of every downstream and upstream FS payload section. The receiver, which thus knows the location of the first XGEM header, can use the PLI field to determine the size of the XGEM payload and to find the location of the next XGEM header, repeating the procedure for all the subsequent XGEM

Exhibit 1010
IPR2024-00899, USPN 9,806,892
151 of 290

frames. The receiver checks whether or not a XGEM frame has been delineated correctly by performing HEC verification on the header of the following XGEM frame.

If HEC verification of the supposed XGEM header fails, the receiver should discard the current XGEM frame along with the remainder of the FS payload.

C.9.3 SDU fragmentation

SDU fragmentation is a process by which a SDU or a SDU fragment available for transmission in the downstream or upstream direction can be partitioned in two or more fragments and each SDU fragment be transmitted in a separate XGEM frame, as shown in Figure C.9.4.

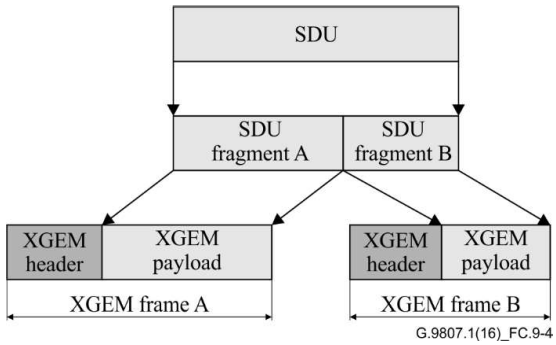

Figure C.9.4 – SDU fragmentation

The downstream and upstream fragmentation is subject to the following respective rules.

In the downstream direction, the OLT applies fragmentation at its discretion. If the available FS payload in the current FS frame is at least 16 bytes, and the length of the SDU available for transmission, including the 8-byte XGEM header, exceeds that available payload, the SDU should be partitioned in two fragments, so that the first SDU fragment completely occupies the available payload of the current FS frame, while the second SDU fragment is transmitted in the FS payload of the next FS frame. Once SDU fragmentation has commenced, the second fragment of the SDU shall be transmitted prior to any other SDU; that is, downstream SDU pre-emption is not supported. In addition to the fragmentation rules above, the OLT should avoid inserting a short idle XGEM frame at the end of the downstream FS payload.

In the upstream direction, an ONU in the Associated substate of the Operation state (O5) applies fragmentation to either new or previously fragmented SDUs without additional restrictions. If the available FS payload in the current allocation is at least 16 bytes, and the length of the SDU or SDU fragment scheduled for transmission, including the 8-byte XGEM header, exceeds that available payload the SDU should be partitioned in two fragments, so that the first SDU fragment completely occupies the available FS payload in the current allocation, while the remainder of the SDU is transmitted in the FS payload of the next upstream allocation associated with the same Alloc-ID, being the subject to the same fragmentation rules. Once SDU fragmentation has commenced, all fragments of the SDU shall be transmitted prior to any other SDU associated with the same Alloc-ID; that is, upstream SDU pre-emption within a given Alloc-ID is not supported.

The following additional rules apply to both the downstream and upstream directions:

– If as a result of fragmentation, the second SDU fragment is less than 8 bytes, it should be padded to the minimum of 8 bytes to meet the minimum XGEM frame size of 16 bytes.

– If the length of the SDU or SDU fragment available for transmission, including the 8-byte XGEM header, is equal to or less than the available FS payload space, further fragmentation is prohibited: the entire available SDU or SDU fragment shall be transmitted in the current FS payload.

Exhibit 1010
IPR2024-00899, USPN 9,806,892
152 of 290

– If the size of the available FS payload is less than 16 bytes, it should be filled with an idle XGEM frame.

C.9.4 Mapping of services into XGEM frames

This clause contains the most common cases of service mappings into XGEM frames, that is, Ethernet and multi-protocol label switching (MPLS). It is also applicable to the services that are carried over Ethernet or MPLS. Any other services are FFS.

C.9.4.1 Ethernet over XGEM

Ethernet frames are carried directly in the XGEM frame payload. The Ethernet packet's preamble and start frame delimiter (SFD) bytes [IEEE 802.3] are discarded prior to XGEM encapsulation. Each Ethernet frame is mapped into a single XGEM frame, as shown in Figure C.9.5 or into multiple XGEM frames. In the latter case, the fragmentation rules of clause C.9.3 apply. A XGEM frame may not encapsulate more than one Ethernet frame.

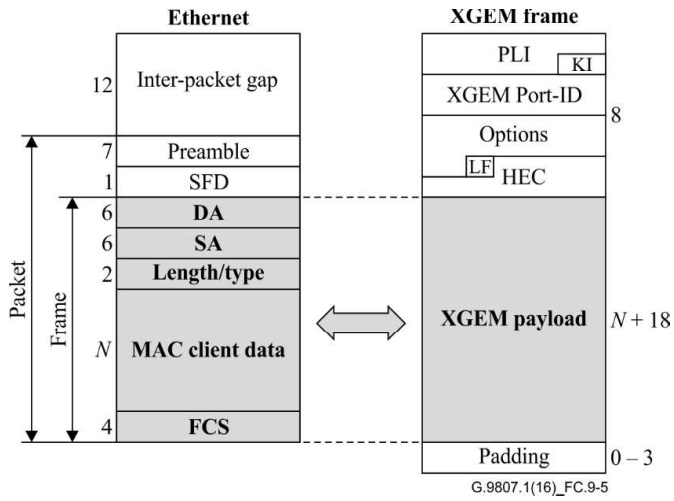

Figure C.9.5 – Ethernet mapping into a XGEM frame

C.9.4.2 MPLS over XGEM

Multi-protocol label switching packets are carried directly in the XGEM frame payload. Each MPLS packet is mapped into a single XGEM frame, as shown in Figure C.9.6 or into multiple XGEM frames. In the latter case, the fragmentation rules of clause C.9.3 apply. A XGEM frame may not encapsulate more than one MPLS packet.

Exhibit 1010
IPR2024-00899, USPN 9,806,892
153 of 290

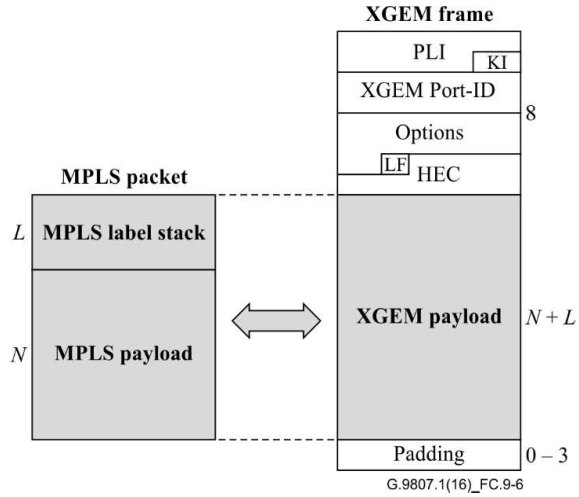

Figure C.9.6 – MPLS packet mapping into a XGEM frame

C.10 XGS-PON PHY adaptation sublayer

C.10.1 XGS-PON PHY adaptation sublayer

This clause discusses matters of physical synchronization and delineation, forward error correction, and scrambling for the downstream and the upstream transmission in XGS-PON. It reuses the concepts originally specified in [ITU-T G.987.3] and incorporates all the XGS-PON-specific aspects.

C.10.1.1 Downstream PHY frame

A working OLT is continuously transmitting in the downstream direction. The OLT's transmission is partitioned into fixed size downstream PHY frames. The duration of a downstream PHY frame is 125 μs, which corresponds to the size of 155 520 bytes (38 880 words) at the downstream line rate of 9.95328 Gbit/s. A downstream PHY frame consists of a 24-byte physical synchronization block (PSBd) and a PHY frame payload. The PHY payload is represented by the downstream FS frame whose content is scrambled and protected by FEC.

The start of a particular downstream PHY frame is defined in the context of the given network element and corresponds to transmission (by the OLT) or receipt (by the ONU) of the first bit of its PSBd.

A diagram of the downstream PHY frame is shown in Figure C.10.1.

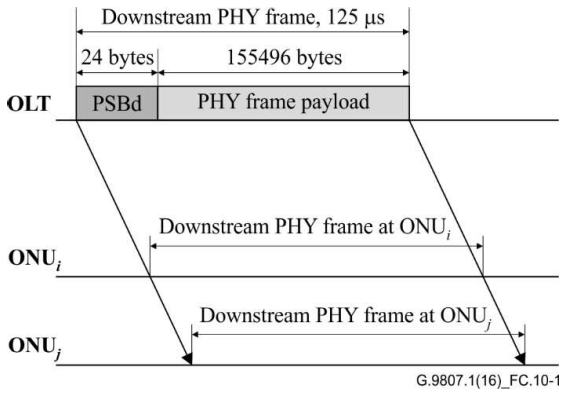

Figure C.10.1 – Downstream PHY frame

Exhibit 1010
IPR2024-00899, USPN 9,806,892
154 of 290

C.10.1.1.1 Downstream physical synchronization block (PSBd)

The size of the downstream physical synchronization block (PSBd) is 24 bytes. It contains three separate 8-byte structures: PSync, superframe counter (SFC) structure, and operation control (OC) structure (see Figure C.10.2).

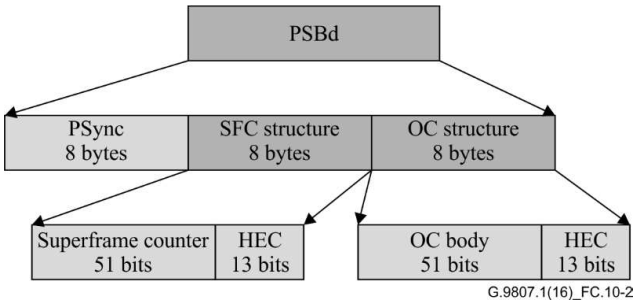

Figure C.10.2 – Downstream physical synchronization block (PSBd)

C.10.1.1.1.1 Physical synchronization sequence (PSync)

The physical synchronization sequence contains a fixed 64-bit pattern. The ONU uses this sequence to achieve alignment at the downstream PHY frame boundary. The coding of the PSync field is 0xC5E51840 FD59BB49.

C.10.1.1.1.2 Superframe counter structure

The SFC structure is a 64-bit field that contains a 51-bit superframe counter (SFC) and a 13-bit HEC field (see Figure C.10.2). The SFC value in each downstream PHY frame is incremented by one with respect to the previous PHY frame. Whenever the SFC reaches its maximum value (all ones), it is set to 0 on the following downstream PHY frame.

The HEC field is a combination of a BCH(63, 12, 2) code operating on the 63 initial bits of the SFC structure and a single parity bit. The details of the HEC construction and verification are specified in Annex C.A.

C.10.1.1.1.3 Operation control structure

The OC structure contains a 51-bit OC body and a 13-bit HEC field (see Figure C.10.2).The HEC field is a combination of a BCH(63, 12, 2) code operating on the 63 initial bits of the OC structure and a single parity bit. The details of the HEC construction and verification are specified in Annex C.A.

The OC body (see Figure C.10.3) has the particular format described below and is filled in by the OLT in accordance with explicitly specified data.

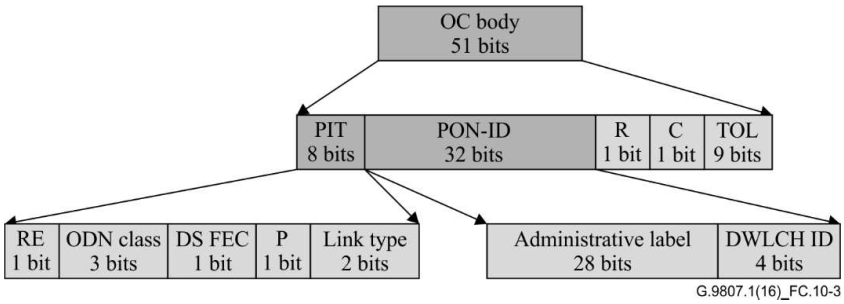

Figure C.10.3 – Operation control structure

Exhibit 1010
IPR2024-00899, USPN 9,806,892
155 of 290

– **PIT**, or **PON-ID type** (8 bits, static, provisioned by the operator): an indication of the ODN architecture, the source of the reported launch power and the ODN class. The PON-ID type (PIT) field is further partitioned as follows.
  – **RE flag** (1 bit): indicates whether the transmit optical level (TOL) field contains the launch power of the OLT (RE = 0) or of a reach extender (RE = 1).
  – **ODN class** (3 bits): identifies the nominal optical parameters of the transceiver according to ODN optical path loss (OPL) class as defined in clause B.6.1 with the coding provided by Table C.10.1.

Table C.10.1 – ODN optical path loss (OPL) class encoding

Code value	ODN OPL class
000	N1
001	N2/N2a
010	N2b
011	E1
100	E2/E2a/D
101	E2b
110	B+
111	C+

  – **DS FEC flag** (1 bit): indicates whether FEC is enabled in the downstream direction. When this bit is set to 1, the FEC of the carried downstream channel is enabled. When this bit is set to 0, the FEC of the carried downstream channel is disabled. For XGS-PON, DS FEC flag must be set to 1.
  – **P flag** (1 bit): Protocol indication flag indicating TC layer protocol. When this bit is set to 1, [ITU-T G.989.3] TC layer protocol is in use. When this bit is set to 0, [ITU-T G.987.3] TC layer protocol is in use. For XGS-PON, P flag must be set to 1.
  – **Link type (2 bits)**: This is not relevant to XGS-PON and Link type is set to 00: 00**:** Link type unspecified;
– **PON-ID** (32 bits, static, provisioned by the operator): Identifies the XGS-PON OLT within a certain domain. PON-ID consists of two fields:
  – **Administrative label:** 28-bit field, supplied by an EMS/OSS to the OLT in accordance with some certain physical or logical numbering plan. The Administrative label is treated transparently by the OLT.
  – **DWLCH ID**: 4-bit field, the LSB of this field is used to indicate the wavelength set as shown in the following Table C.10.2, the MSB of the field can take on any value for XGS-PON. For the support of TDMA coexistence with XG-PON ONUs, the Administrative label and DWLCH ID are jointly provisioned by the same way as the 32-bit PON-ID field in [ITU-T G.987.3].

Table C.10.2 – DWLCH ID LSB encoding

Code value	Wavelength set
0	Basic wavelength set
1	Optional wavelength set

Exhibit 1010
IPR2024-00899, USPN 9,806,892
156 of 290

– **R** (1 bit): This must be set to 0 for XGS-PON.
– **C** (1 bit): Transmit optical level reference point indicator. This must be set to 0 for XGS-PON.
– C = 0: The TOL value below refers to the S/R reference point;

  Bits "R" and "C" are set to 0 for the support of XG-PON ONUs on TOL interpretation. **TOL** (9 bits, dynamic, maintained by the system): Transmit optical level. An indication of the current OLT transceiver channel launch power into the ODN (at the S/R reference point), if RE = 0, or reach extender transceiver launch power, if RE = 1. Its value is an integer representing a logarithmic power measure having 0.1 dB granularity with respect to -30 dBm (i.e., the value zero represents –30 dBm, 0x12C represents 0 dBm, and 0x1FE represents 21 dBm). The 0x1FF default value indicates that TOL is not supported on the given PON interface.

C.10.1.1.2 PSBd field scrambling

After HEC calculation at the transmitter and prior to HEC verification at the receiver, the SFC and OC structures are exclusive-OR-ed with the fixed pattern 0x0F0F0F0F 0F0F0F0F.

C.10.1.1.3 ONU downstream synchronization

The OLT controls the subtending ONUs by timing their behaviour with respect to the start of the downstream PHY frame, as determined by the respective ONU. To operate on a PON, each ONU must be synchronized with the sequence of the downstream PHY frames. While the details of the synchronization mechanism are internal to the ONU and are not subject to standardization, the following description represents the reference synchronization state machine that is reasonably immune to both false lock (on an independent uniformly random bit stream) and false loss of synchronization (under high BER of up to 10^{-3}). The vendor implementation of the ONU synchronization mechanism is expected to match the performance of the reference state machine.

The reference implementation of the ONU downstream synchronization state machine is shown in Figure C.10.4.

The ONU begins in the Hunt state. While in the Hunt state, the ONU searches for the PSync pattern in all possible alignments (both bit and byte) within the downstream signal. Once an exact match with the PSync pattern specified in clause C.10.1.1.1.1 is found, the ONU verifies if the 64 bits immediately following the PSync pattern form a valid (i.e., error-free or correctable) HEC-protected SFC structure (see Table C.A.4 for the HEC verification rules). If the 64-bit protected SFC structure is uncorrectable, the ONU remains in the Hunt state and continues searching for a PSync pattern. If the 64-bit protected SFC structure is valid, the ONU stores a local copy of the SFC value and transitions into the Pre-Sync state.

Exhibit 1010
IPR2024-00899, USPN 9,806,892
157 of 290

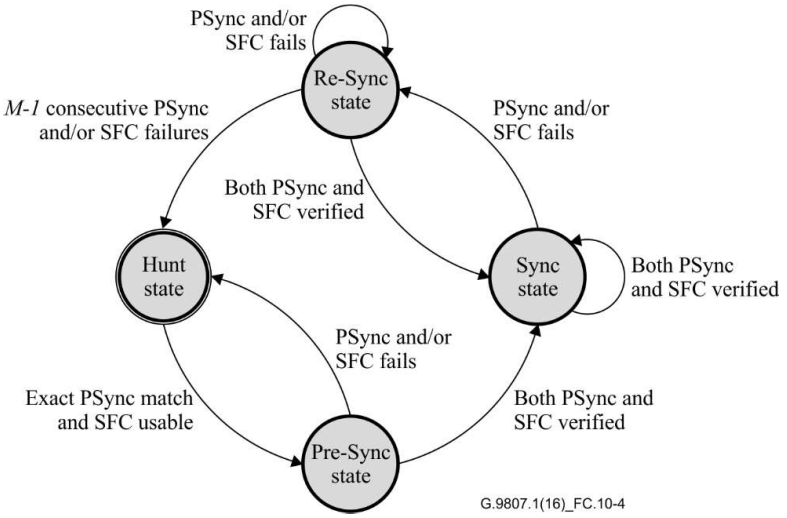

Figure C.10.4 – Downstream ONU synchronization state machine

Once the ONU locates a boundary of a downstream PHY frame and leaves the Hunt state, it performs PSync and SFC verification on each subsequent PHY frame boundary (i.e., once every 155 520 bytes at the nominal downstream line rate of 9.95328 Gbit/s) and executes a corresponding transition of the downstream synchronization state machine. Prior to PSync and SFC verification, the ONU increments the local SFC value by one. The first incoming 64-bit sequence at the boundary of a downstream PHY frame is considered a PSync field, whereas the subsequent 64-bit sequence is considered a SFC structure. The PSync verification is successful if at least 62 bits of the incoming 64-bit sequence match the fixed PSync pattern; otherwise, the PSync verification fails. The SFC verification is successful if the incoming 64-bit sequence forms a valid (error-free or correctable) HEC-protected field, and the incoming SFC value is equal to the locally stored (and just incremented) SFC value; otherwise, the SFC verification fails.

Once in the Pre-Sync state, the ONU transitions to the Sync state if both PSync verification and SFC verification are successful, and returns to the Hunt state if either PSync verification or SFC verification fails.

Once in the Sync state, the ONU remains in that state as long both PSync verification and SFC verification are successful, and transitions into the Re-Sync state, if either PSync verification or SFC verification fails.

Once in the Re-Sync state, the ONU transitions back to Sync state if both PSync and SFC are successfully verified once. However, if for $M - 1$ consecutive PHY frames either PSync verification or SFC verification fails, the ONU declares loss of downstream synchronization, discards the local SFC copy, and transitions into the Hunt state.

The recommended value of the parameter M is 3.

C.10.1.1.4 Downstream PHY frame payload

The payload of a downstream PHY frame has the size of 155 496 bytes for the nominal line rate of 9.95328 Gbit/s. It is obtained from the corresponding downstream FS frame (see clause C.8.1.1), applying FEC (clause C.10.1.3) and scrambling the result (clause C.10.1.4).

C.10.1.2 Upstream PHY frames and upstream PHY bursts

The duration of an upstream PHY frame is 125 μs, which corresponds to the size of 155 520 bytes (38 880 words) at the upstream line rate of 9.95328 Gbit/s.

Exhibit 1010
IPR2024-00899, USPN 9,806,892
158 of 290

As directed by the OLT, each ONU determines the point in time corresponding to the start of a particular upstream PHY frame by appropriately offsetting the starting point of the respective downstream PHY frame. The sequence of upstream PHY frame boundary points provides a common timing reference shared by the OLT and all the ONUs on the PON, but those points do not correspond to any specific event (unlike the downstream PHY frame boundary points, at which the transmission or receipt of a PSBd starts).

In the upstream direction, each ONU transmits a series of relatively short PHY bursts and remains silent, disabling the transmitter, in-between the bursts. An upstream PHY burst consists of an upstream physical synchronization block (PSBu) and a PHY burst payload represented by the upstream FS burst whose content is protected by FEC and is scrambled. The OLT uses the BWmap to control timing and duration of the upstream PHY bursts so that the upstream transmissions by different ONUs are non-overlapping. The upstream PHY bursts of each ONU are referenced to the start of the appropriate upstream PHY frame. An upstream PHY burst belongs to upstream PHY frame *N* as long as this burst is specified in the BWmap transmitted with downstream PHY frame *N*. If this is the case, the first byte of the FS burst header is transmitted within the boundaries of PHY frame *N*. The PSBu portion of an upstream PHY burst may be transmitted within the boundaries of the previous PHY frame. An upstream PHY burst belonging to a particular upstream PHY frame may extend beyond the trailing boundary of that frame.

The relationship between PHY framing boundaries and the upstream PHY bursts of different ONUs is illustrated in Figure C.10.5.

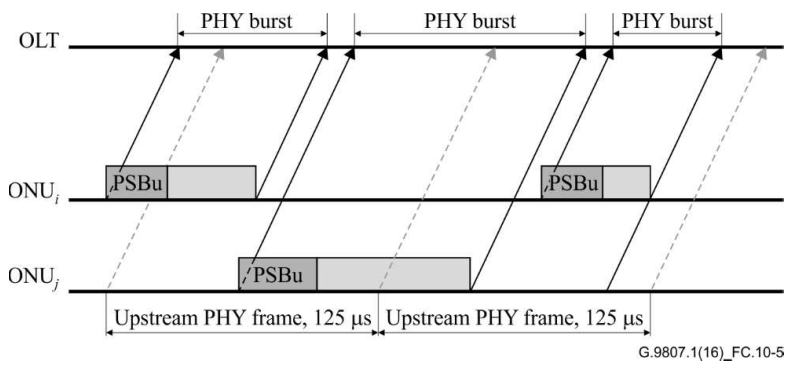

Figure C.10.5 – Upstream PHY frame and upstream PHY bursts

C.10.1.2.1 Upstream physical synchronization block (PSBu)

The PSBu section contains preamble and delimiter (see Figure C.10.6) that allow the OLT's optical receiver to adjust to the level of the optical signal and to delineate burst. The length and pattern of preamble and delimiter constitute the profile of the burst. The set of allowed burst profiles is specified by the OLT in advance using a series of Burst_Profile PLOAM messages with distinct burst profile indices. The specific profile to be used with the particular PHY burst is selected by the OLT by specifying a particular burst profile index in the BurstProfile field in the corresponding BWmap allocation.

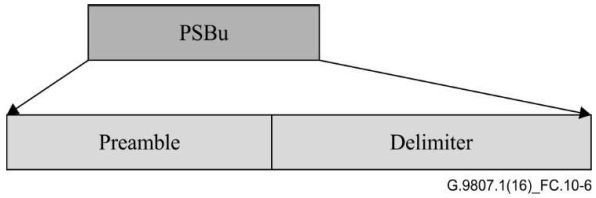

Figure C.10.6 – Upstream physical synchronization block

Exhibit 1010
IPR2024-00899, USPN 9,806,892
159 of 290

See Appendix C.III for the discussion of preamble and delimiter patterns and recommended burst profiles.

C.10.1.2.2 Upstream PHY burst payload

The payload of an upstream PHY burst is obtained from the corresponding upstream FS burst (see clause 8.1.2) by applying FEC, if so prescribed in the burst profile specified by the OLT (clause 10.1.3.2), and scrambling the result (clause 10.1.4.2).

C.10.1.2.3 Guard time

To prevent upstream transmissions from colliding and jamming each other, the OLT builds the BWmap allowing suitable guard time between upstream bursts from different ONUs. Guard time accommodates the Tx enable and Tx disable times, and includes the margin for the individual ONU transmission drift. The recommended minimum guard time is 512 bits. See Appendix C.III for the details of analysis.

C.10.1.3 Forward error correction

The PHY adaptation sublayer employs forward error correction (FEC) to introduce redundancy in the transmitted data. This allows the decoder to detect and correct certain transmission errors. In a XGS-PON system, FEC encoding is based on Reed-Solomon (RS) codes.

Reed-Solomon (RS) codes are non-binary codes, which operate on byte symbols and belong to the family of systematic linear cyclic block codes. A RS code takes a data block of constant size and adds extra parity bytes at the end, thus creating a codeword. Using those extra bytes, the FEC decoder processes the data stream, discovers errors, corrects errors, and recovers the original data.

The most commonly used RS codes are RS(255, 239), where a 255-byte codeword consists of 239 data bytes followed by 16 parity bytes, and RS(255, 223), where a 255-byte codeword consists of 223 data bytes followed by 32 parity bytes. The RS(255, 239) code is specified in [ITU-T G.709], Annex A.

This Recommendation employs RS codes in a truncated, or shortened, form, thus allowing to work with a more convenient codeword and data block size. The shortened codeword of 248 symbols is padded at the encoder with 7 leading zero symbols which are not transmitted but which are reinserted at the receiver prior to decoding.

At the nominal line rate of 9.95328 Gbit/s, in both downstream and upstream directions, the FEC code is RS(248,216) which is the truncated form of RS(255,223). The RS(248, 216) and RS(248, 232) codes are formally described in Annex C.B.

FEC support is mandatory for both OLT and ONU in the upstream as well as downstream directions. In the downstream direction, FEC is statically configurable as on for all ONUs; in the upstream direction, the use of FEC is under dynamic control by the OLT.

C.10.1.3.1 Downstream FEC

C.10.1.3.1.1 Downstream FEC codeword

For 9.95328 Gbit/s nominal line rate, the downstream FEC code is RS(248, 216). Each downstream PHY frame contains 627 FEC codewords. Each codeword is 248 bytes long. Within a codeword, 216 data bytes are followed by 32 parity bytes.

The 24-byte PSBd section is not included in the FEC codeword. In a downstream PHY frame, the first codeword starts with the 25th byte of the PHY frame (the first byte of the downstream FS header section), the second codeword starts from the 273rd byte of the PHY frame, and the third codeword starts from the 521st byte of the PHY frame, etc. For 9.95328 Gbit/s, the downstream FEC parity

Exhibit 1010
IPR2024-00899, USPN 9,806,892
160 of 290

bytes insertion and payload reconstruction are shown in Figure C.10.9 and Figure C.10.10, respectively[1].

Note that the downstream FEC encoding processing step is applied before downstream scrambling.

NOTE 1 – Equivalent to Figure 10-7 of [ITU-T G.989.3]; it is not relevant to XGS-PON.

NOTE 2 – Equivalent to Figure 10-8 of [ITU-T G.989.3]; it is not relevant to XGS-PON.

EDITORIAL NOTE: Figure numbers C.10.7 and C.10.8 are not used in this Recommendation.

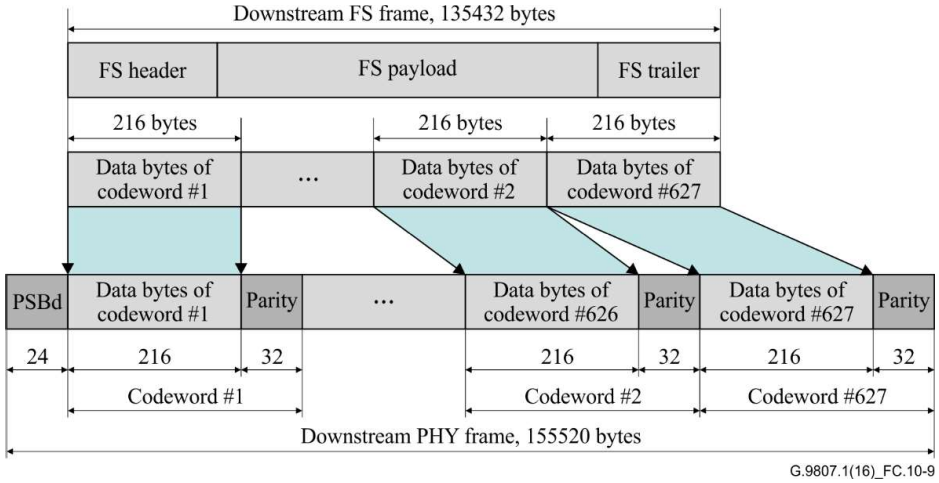

Figure C.10.9 – 10G FEC parity bytes insertion in downstream PHY frame

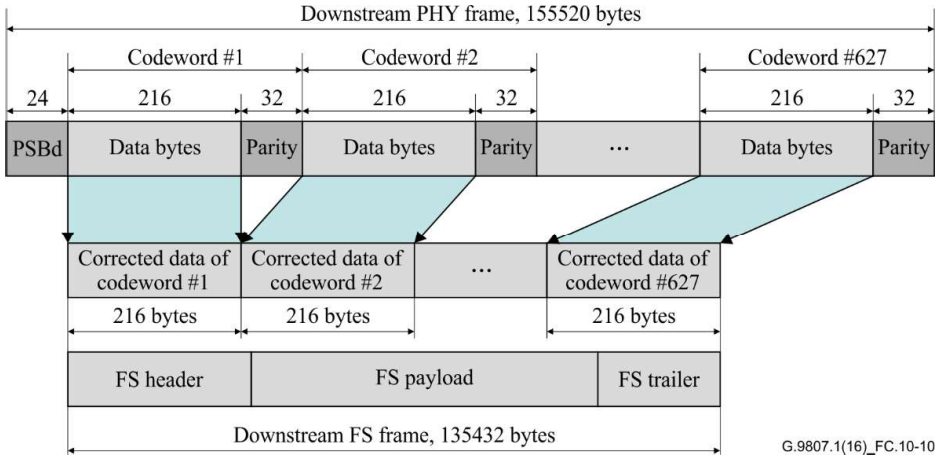

Figure C.10.10 – 10G downstream payload reconstruction at FEC decoder

C.10.1.3.1.2 Downstream FEC on/off control

For XGS-PON, the OLT is statically configured to insert the FEC parity in the downstream. The ONU FEC decoder provides an estimate of the BER on the downstream link.

[1] In the XGS-PON context, the qualifiers "10G" and "2.5G" are used as short hand notations for "9.95328 Gbit/s nominal line rate" and "2.48832 Gbit/s nominal line rate", respectively.

Exhibit 1010
IPR2024-00899, USPN 9,806,892
161 of 290

C.10.1.3.2 Upstream FEC

C.10.1.3.2.1 Upstream FEC codeword

For 9.95328 Gbit/s, the upstream FEC code is RS(248, 216). The PSBu section is not included in the FEC codeword. The first codeword in a PHY burst begins with the upstream FS header section. All allocations of a particular ONU have the same FEC status. Contiguous allocations are encoded as a single block of data, so that there is at most one shortened codeword at the end of the burst. For 9.95328 Gbit/s, the upstream FEC parity bytes insertion and payload reconstruction are shown in Figures C.10.13 and C.10.14, respectively.

Note that the upstream FEC encoding processing step is applied before upstream scrambling.

NOTE 1 – Equivalent to Figure 10-11 of [ITU-T G.989.3]; it is not relevant to XGS-PON.

NOTE 2 – Equivalent to Figure 10-12 of [ITU-T G.989.3]; it is not relevant to XGS-PON.

EDITORIAL NOTE: Figure numbers C.10.11 and C.10.12 are not used in this Recommendation.

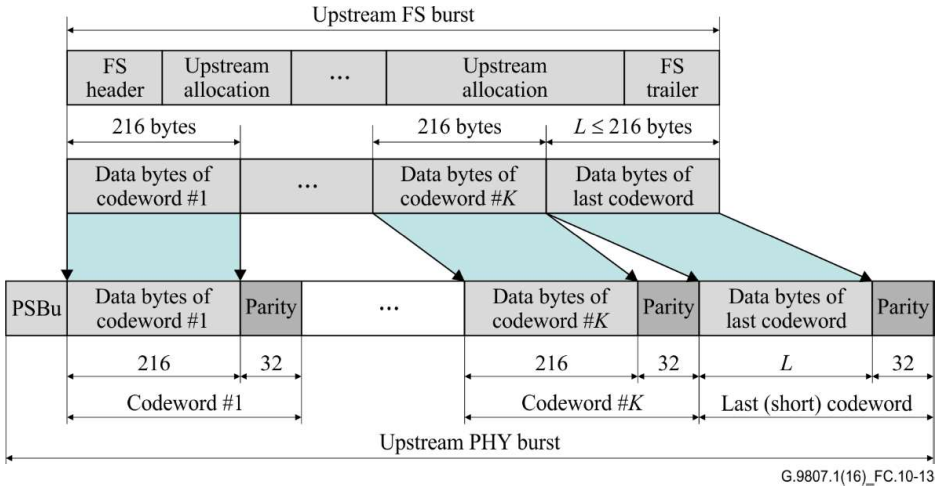

Figure C.10.13 – 10G upstream FEC parity insertion in PHY frame

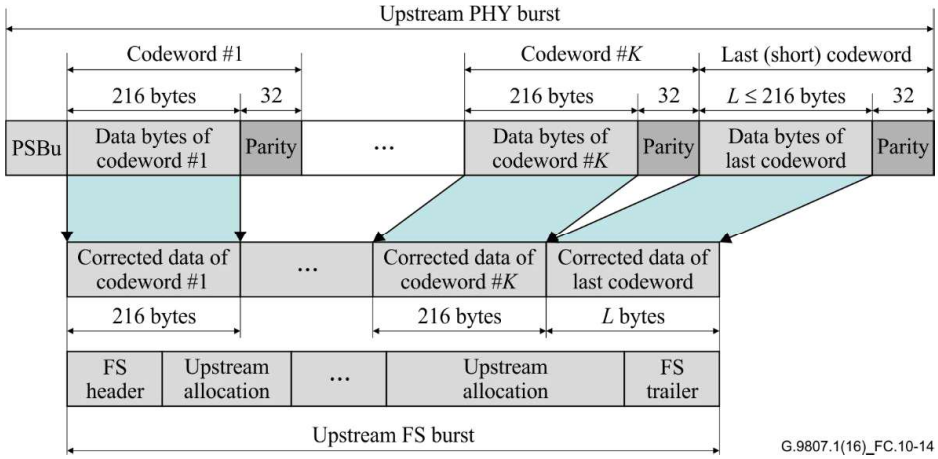

Figure C.10.14 – 10G upstream payload reconstruction at FEC decoder

Exhibit 1010
IPR2024-00899, USPN 9,806,892
162 of 290

C.10.1.3.2.2 Shortened last codeword

Whenever there are fewer than 216 data bytes (for 10G) in the last codeword of a FS burst, the FEC encoder generates a shortened last codeword as follows:

– Extra zero padding bytes are added at the beginning of the last codeword to fill it to 216 bytes (for 10G).
– The parity bytes are calculated.
– The padding bytes are removed and the shortened codeword is transmitted.

The FEC decoder at the OLT conducts the following steps to decode the shortened last codeword:

– The extra zero padding bytes are inserted at the beginning of the shortened last codeword.
– Following the decoding process, the padding bytes are removed.

C.10.1.3.2.3 BWmap considerations

When building the BWmap, the OLT should take the usage of FEC into account, and strive to provide allocations that will result in an integral number of FEC blocks whenever FEC is utilized.

Once the GrantSizes for the allocations within a FS burst are computed, the OLT may calculate the size of the corresponding PHY burst in the following steps:

- The size of the FS burst is equal to total of the sum of the GrantSizes, the fixed portion of the upstream FS header, the FS trailer, and the 48-byte PLOAM field if the PLOAMu flag is set.
- If the requested burst profile includes FEC, the FEC overhead is equal to a 32-byte parity block for each whole and possibly for one partial 216-byte data block within the FS burst.
- Then the total size of the PHY burst is equal to the size of the FS burst, the FEC overhead (if applicable), and the size of the PSBu block. The size of the PSBu block is determined by the profile chosen by the OLT.

Once the StartTime for the given PHY burst is assigned, the StartTime of the next PHY burst within the BWmap should be spaced by, at least, the sum of the following: the size of the given FS burst with FEC overhead, if applicable, the minimum guard time, and the size of the PSBu block of the next PHY burst.

C.10.1.3.2.4 Upstream FEC on/off control

The OLT dynamically activates or deactivates the FEC functionality for a given ONU in the upstream direction by selecting the appropriate burst profile. When FEC is active, the FEC decoder provides the estimate of the BER on the upstream link. FEC can be turned off, if the observed BER is low enough to trade-off between traffic throughput improvement and the effective BER increase. When FEC is deactivated, the BER estimate is obtained using the BIP-32 value in the FS trailer. FEC can be re-activated if the observed BER is too high.

C.10.1.4 Scrambling

C.10.1.4.1 Scrambling of the downstream PHY frame

The downstream PHY frame is scrambled using a frame-synchronous scrambling polynomial. The polynomial used is $x^{58} + x^{39} + 1$. This pattern is added modulo two to the downstream data. The shift register used to calculate this polynomial is reset by a preload pattern at the first bit following the PSBd block, and is allowed to run until the last bit of the downstream PHY frame.

The preload pattern, which is 58 bits long, changes for every downstream PHY frame. The most significant 51 bits of the preload (P1…P51) are represented by the 51-bit Superframe counter transmitted in the PSBd block, so that P51, which is the most significant bit (MSB) of the preload, equals the MSB of the Superframe counter. The seven least significant bits of the preload are set to 1.

Exhibit 1010
IPR2024-00899, USPN 9,806,892
163 of 290

A diagram of the downstream and the upstream PHY frame scrambling is shown in Figure C.10.15. An example of a scrambler sequence is shown in Annex C.A.

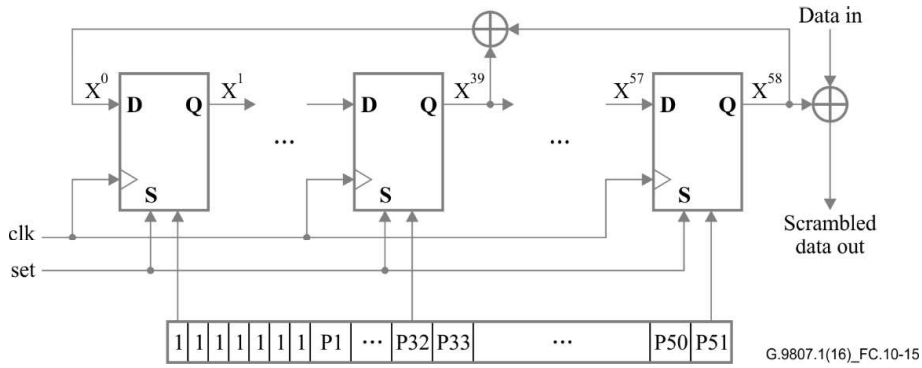

Figure C.10.15 – Downstream and upstream PHY frame scrambler

C.10.1.4.2 Scrambling of the upstream PHY burst

The upstream PHY burst is scrambled using a burst-synchronous scrambling polynomial. The polynomial used is $x^{58} + x^{39} + 1$. This pattern is added modulo two to the upstream data. The shift register used to calculate this polynomial is reset by a preload pattern at the first bit following the PSBu block, and is allowed to run until the last bit of the PHY burst.

The preload pattern, which is 58 bits long, changes for every upstream PHY frame. If an ONU transits multiple PHY bursts within the same PHY frame, the preload pattern for these bursts remains the same. The most significant 51 bits of the preload (P1…P51) are represented by the 51-bit Superframe counter received in the PSBd block of the corresponding downstream PHY frame. The seven least significant bits of the preload are set to 1.

A diagram of the upstream PHY burst scrambling is shown in Figure C.10.15. An example of a scrambler sequence can be found in Annex C.A.

C.10.2 PtP WDM management PHY adaptation sublayer

Not applicable to XGS-PON.

C.11 PLOAM messaging channel

C.11.1 Overview

The physical layer OAM (PLOAM) messaging channel in a XGS-PON system is an operations and management facility between the OLT and the ONUs that is based on a fixed set of 48-byte messages. The PLOAM channel transportation is in-band via the designated PLOAM partition of the downstream FS frame header and the upstream FS burst header. The OLT and the ONU PLOAM processors appear as clients of the respective XGS-PON framing sublayers. The PLOAM channel provides more flexible functionality than the embedded management channel and is generally faster than the OMCC.

C.11.1.1 PLOAM channel functionality

The PLOAM channel supports the following XGS-PON TC layer management functions:

– Profile announcement;
– ONU activation;
– ONU registration;
– Encryption key update exchange;
– Power management.

Exhibit 1010
IPR2024-00899, USPN 9,806,892
164 of 290

C.11.1.2 PLOAM channel rate limitations

Downstream PLOAM messages fall into two categories, the messages that are broadcast to all ONUs and the messages that are unicast to a specific ONU identified by its ONU-ID. Within a given 125-μs frame, the OLT may transmit at most one broadcast PLOAM message and at most one unicast PLOAM message to each ONU.

The ONU should be able to store eight unicast and broadcast downstream PLOAM messages before they are processed. The PLOAM processing model is single threaded. The normative processing time of a PLOAM message is 750 μs. That is, once a downstream PLOAM message is received in an empty queue in downstream PHY frame *N,* the ONU should be able to remove the message from the queue, perform all associated processing and generate a response to be sent upstream not later than in upstream PHY frame N+6. Furthermore, if at the start of the upstream frame in which a PLOAM response is sent upstream, the PLOAM queue remains not empty, the message at the head of the queue should be processed and the response, if required for the given message type, be prepared for upstream transmission not later than in the 6th subsequent upstream PHY frame.

Note that under these requirements, the OLT can determine the maximum number of unacknowledged broadcast and unicast PLOAM messages directed to a given ONU as well as the expected response time for any downstream PLOAM message.

The ONUs transmit upstream PLOAM messages under the control of the OLT, which explicitly sets the PLOAMu flag in the respective allocation structures. The OLT should grant regular PLOAM transmission opportunities to each ONU. The OLT may modulate the rate at which it grants upstream PLOAMu transmission opportunities to the individual ONUs based on the ONU type, provisioned operating and service parameters, number and types of PLOAM messages being transmitted downstream, and the ONU's own feedback in the form of the PLOAM queue status indication.

C.11.1.3 PLOAM channel robustness

When as a result of unicast PLOAM message processing the ONU enters or remains in the Operation state (O5), it acknowledges the processing outcome by generating an upstream PLOAM message. (See clause C.12 for the ONU activation cycle states and transitions.) Such a response PLOAM can be either of a specific type required by the particular PLOAM protocol, or of the general Acknowledgement type. An Acknowledgement PLOAM message is generated also in case of a downstream PLOAM format or processing error. Both a specific type response and the Acknowledgement type response carry the sequence number of the downstream message being acknowledged. In addition, the Acknowledgement type response carries a completion code that indicates the outcome of PLOAM message processing.

Moreover, a PLOAM message of Acknowledgement type is used in response to a PLOAM allocation when no upstream PLOAM is available for transmission. In this case, the completion code allows to distinguish between the idle condition (no PLOAM message in the transmit queue or being processed) and the busy condition (the PLOAM upstream transmit queue is empty, but a downstream PLOAM message is being processed).

Broadcast downstream PLOAM messages that require no response (the Key_Control message requires a response even when it is broadcast) and downstream PLOAM messages that fail the integrity check are not acknowledged.

If the OLT expects the ONU to acknowledge or respond to a message, and instead receives merely a keep-alive acknowledgement to a PLOAM request, it can infer that the ONU has failed to process the message. If ONU_i repeatedly fails to acknowledge a downstream PLOAM message, the OLT detects the loss of PLOAM $channel_i$ ($LOPC_i$) defect.

Exhibit 1010
IPR2024-00899, USPN 9,806,892
165 of 290

C.11.1.4 Extensibility

The implementation of the PLOAM channel should be flexible to accommodate future enhancements in a backward-compatible way.

C.11.2 PLOAM message format

The PLOAM message structure is shown in Table C.11.1, with each field being further defined in the following clauses.

Table C.11.1 – Generic PLOAM message structure

Octet	Field	Description
1-2	ONU-ID	Ten bits, aligned at the least significant bit (LSB) end of the 2-byte field. The six most significant bits are reserved, and should be set to 0 by the transmitter and ignored by the receiver.
3	Message type ID	This byte indicates the message type. The enumerated code point for each message type is defined below.
4	SeqNo	Sequence number.
5-40	Message_Content	The message content is defined in the clause that describes each message type ID.
41-48	MIC	Message integrity check.

C.11.2.1 ONU-ID

The ONU-ID field includes six reserved bits, plus an actual 10-bit ONU identifier that specifies the message recipient in the downstream direction or the message sender in the upstream direction. During ONU activation, the ONU is assigned an ONU-ID in the range from 0 to 1 020. The reserved ONU-ID value 1 023 (0x3FF) indicates a broadcast message in the downstream direction or an ONU that has not been assigned an ONU-ID in the upstream direction. The value 1 021 (0x3FD) is reserved and should not appear as ONU-ID in PLOAM messages. Specially, the value 1022 (0x3FE) is only used in the Burst_Profile message (see C.11.3.3.1) to indicate a broadcast burst profile for 9.95328 Gbit/s upstream line rate.

C.11.2.2 Message type ID

Message type ID is an 8-bit field that indicates the type of the message and defines the semantics of the message payload. Message type ID code points are defined in clause C.11.3 below. Message type ID code points that are not explicitly defined in this Recommendation are reserved. Reserved Message type ID code points should not be allocated by any vendor for any purpose and should not be transmitted in a PLOAM message. Upon receipt of an upstream PLOAM message with an unsupported message type ID, the OLT should ignore the message, including the sequence number field. Upon receipt of a downstream PLOAM message with a reserved or unsupported message type ID, an ONU should ignore the message, if it was sent with the broadcast ONU-ID, or negatively acknowledge the message as an unknown message type, if it was sent to that specific ONU-ID.

C.11.2.3 SeqNo

SeqNo is an 8-bit field containing a sequence number counter that is used to ensure robustness of the PLOAM messaging channel.

In the downstream direction, the SeqNo field is populated with the value of a corresponding OLT sequence number counter. The OLT maintains a separate sequence number counter for each ONU unicast and for the broadcast PLOAM message flow. The counter for the broadcast PLOAM message flow is initialized to 1 upon OLT reboot. For each ONU, the OLT initializes the sequence number counter to 1 upon ONU-ID assignment during activation. Upon transmission of a broadcast or unicast

Exhibit 1010
IPR2024-00899, USPN 9,806,892
166 of 290

PLOAM message, the appropriate sequence number counter is incremented. Each sequence number counter rolls over from 255 to 1; the value 0 is not used downstream.

In the upstream direction, whenever an upstream PLOAM message is a response to a downstream PLOAM message, the content of the SeqNo field is equal to the content of the SeqNo field of the downstream message. The same SeqNo may appear on more than one upstream PLOAM message, for example, for the conveyance of a multi-fragment encryption key. If a PLOAM message is originated autonomously by the ONU, for example, Serial_Number_ONU sent in response to a serial number grant, the value SeqNo = 0 is used. The value SeqNo = 0 is also used in responses to PLOAM grants at times when the ONU has no upstream PLOAM messages enqueued.

C.11.2.4 Message content

Octets 5 to 40 of the PLOAM message are used for the payload of PLOAM messages. The message payload content is specific to a particular message type ID and is defined in clause C.11.3. Unused octets of the message payload content are padded with the value 0x00 by the transmitting PLOAM processor and are ignored by the receiving PLOAM processor.

C.11.2.5 Message integrity check

The message integrity check (MIC) is an 8-byte field that is used to verify the sender's identity and to prevent a forged PLOAM message attack.

MIC generation is specified in clause C.15.6. Key generation and management for PLOAM MIC is specified in clause C.15.8.

For the purpose of MIC verification, there is no distinction between the significant octets and padding octets of the message payload content. Using the PLOAM message content and the shared PLOAM integrity key, the sender computes the MIC and transmits it with the PLOAM message. Using the same message content and shared key, the receiver computes its version of the MIC and compares it with the MIC value carried in the received PLOAM message. If the two MIC values are equal, the PLOAM message is valid. Otherwise, the message is declared invalid and should be discarded.

The shared PLOAM integrity key can be either ONU-specific, derived based on the master session key (MSK), or default key (see clauses C.15.3.3 and C.15.8.1, respectively). The selection of either ONU-specific or default PLOAM integrity keys for each PLOAM message type is specified in clauses C.11.3.3 and C.11.3.4.

C.11.2.6 Common elements of PLOAM message format

C.11.2.6.1 Vendor_ID

Vendor_ID is the first of the two components of the ONU serial number, which ONU reports to the OLT in the course of activation, and which the OLT stores and subsequently uses to address the ONU when the ONU-ID is not yet available or is considered unreliable.

The code set for the Vendor_ID is specified in [ATIS-0300220].

The four characters are mapped into the 4-byte field by taking each ASCII/ANSI character code and concatenating them. For example, Vendor_ID = ABCD fills the four octets of the PLOAM message format element as follows:

Character	Octet	Value
A	1	0x41
B	2	0x42
C	3	0x43
D	4	0x44

Exhibit 1010
IPR2024-00899, USPN 9,806,892
167 of 290

In case of a RE embedded ONU, the Vendor_ID should be the ordinary SN plus 0x80 00 00 00. Note that the 4 MSB are the ASCII coded alphanumeric label of the vendor. In this formatting, those characters of ordinary SN consume code points from 65 to 90, while the leading bit of each byte is unused.

C.11.2.6.2 VSSN

Vendor-specific serial number (VSSN) is the second of the two components of the ONU serial number, which ONU reports to the OLT in the course of activation, and which the OLT uses to address the ONU when the ONU-ID is unavailable or unreliable.

VSSN is a four-byte unsigned integer, selected by the ONU vendor.

C.11.2.6.3 Correlation tag

Not applicable to XGS-PON.

C.11.2.6.4 Calibration record status

Not applicable to XGS-PON.

C.11.2.6.5 Tuning granularity

Not applicable to XGS-PON.

C.11.2.6.6 One-step tuning time

Not applicable to XGS-PON.

C.11.2.6.7 Attenuation

Not applicable to XGS-PON.

C.11.2.6.8 Power levelling capability

Not applicable to XGS-PON.

C.11.3 PLOAM message definitions

Not applicable to XGS-PON.

C.11.3.1 Downstream PLOAM message summary

Table C.11.2 summarizes the downstream PLOAM messages. Please note that downstream PLOAM message IDs 0xF0~0xFF are reserved for [ITU-T G.9807.2].

Table C.11.2 – Downstream PLOAM messages

Message type ID	Message name	Function	Trigger	Effect of receipt
0x01	Burst_Profile	Broadcast or unicast message to provide upstream burst header information.	Periodically with programmable periodicity.	The ONU stores the burst profile for use in subsequent upstream transmissions. If in Operation state (O5) and responding to a directed Burst_Profile message, send Acknowledgement.

Exhibit 1010
IPR2024-00899, USPN 9,806,892
168 of 290

Table C.11.2 – Downstream PLOAM messages

Message type ID	Message name	Function	Trigger	Effect of receipt
0x03	Assign_ONU-ID	To link a free ONU-ID value with the ONU's serial number.	When the OLT recognizes the unique serial number of an ONU during the discovery process.	The ONU with the specified serial number sets its ONU-ID and also its default Alloc-ID and OMCC XGEM port-ID. No Acknowledgement.
0x04	Ranging_Time	To indicate the round-trip equalization delay (EqD). As a broadcast message, may be used to offset the EqD of all ONUs (for example, after a protection switching event).	When the OLT decides that the delay must be updated. See the ONU activation description in clause C.12.	The ONU fills or updates the equalization delay register with this value. If in or transitioning to Operation state (O5) and responding to directed Ranging_Time message, send Acknowledgement.
0x05	Deactivate_ ONU-ID	To instruct a specific ONU to stop sending upstream traffic and reset itself. It can also be a broadcast message.	At the implementer's discretion.	The ONU with the specified ONU-ID switches off its laser. The ONU-ID, default and explicit Alloc-IDs, default XGEM Port-ID, burst profiles, and equalization delay are discarded. The ONU transitions to the Initial state (O1). No Acknowledgement.

Exhibit 1010
IPR2024-00899, USPN 9,806,892
169 of 290

Table C.11.2 – Downstream PLOAM messages

Message type ID	Message name	Function	Trigger	Effect of receipt
0x06	Disable_Serial_ Number	Broadcast message to disable/enable a specific ONU or a specific ONU set.	At the implementer's discretion.	The addressed ONUs (that is, the ONU with the specified serial number or all ONUs) switch off the laser and transition to the Emergency Stop state (O7). The disabled ONUs are prohibited from transmitting. Enable option: The addressed ONUs (that is, the ONU with the specified serial number or all ONUs in the Emergency Stop state (O7)) transition to the Initial state (O1). The enabled ONUs discard the TC layer configuration and restart the activation, as specified in clause C.12. No Acknowledgement.
0x09	Request_ Registration	To request an ONU's Registration_ID.	At the implementer's discretion; ONU has been previously activated.	Send the Registration message.
0x0A	Assign_Alloc-ID	To assign a specified Alloc-ID to a particular ONU or to cancel a previously executed Alloc-ID assignment.	As part of service provisioning. The default Alloc-ID for OMCC need not be explicitly assigned.	The ONU acknowledges the message and responds henceforth to bandwidth grants to this Alloc-ID.
0x0D	Key_Control	The OLT instructs the ONU to generate a new data encryption key of specified length or to confirm an existing data encryption key.	At the implementer's discretion.	Send one Key_Report message for each 32-byte key fragment of response content.
0x12	Sleep_Allow	To enable or disable ONU power saving in real time.	At the implementer's discretion.	If the ONU power management has been enabled using OMCI, the ONU response is controlled by the state machine of clause C.16. Otherwise, the ONU ignores the message.

Exhibit 1010
IPR2024-00899, USPN 9,806,892
170 of 290

Table C.11.2 – Downstream PLOAM messages

Message type ID	Message name	Function	Trigger	Effect of receipt
0x1D	Reboot_ONU	Broadcast or unicast message to cause one or more ONUs to reboot	At the implementer's discretion	This is downstream only message and OLT does not expect ACK for this message. All addressed ONUs are expected to reboot.

C.11.3.2 Upstream PLOAM message summary

Table C.11.3 summarizes the upstream PLOAM messages. Please note that upstream PLOAM message IDs 0xF0~0xFF are reserved for [ITU-T G.9807.2].

Table C.11.3 – Upstream PLOAM messages

Message type ID	Message name	Function	Trigger	Effect of receipt
0x01	Serial_Number_ ONU	To report the serial number of an activating ONU.	An ONU in the Serial Number state (O2-3) sends a Serial_Number_ONU message in response to a SN grant.	The OLT detects an activation attempt, discerns the activating ONU's serial number and provides a feedback to the activating ONU, which is in the form of Assign_ONU-ID, message.
0x02	Registration	To report the Registration_ID of an ONU.	When the ONU is in the Ranging state (O4) or is responding to a ranging grant, or when the ONU is in the Operation state (O5) and is responding to the Request_ Registration message.	The OLT may use the ONU's Registration_ID as described further in clause C.15.2.1.1.
0x05	Key_Report	To send a fragment of a new data encryption key or a hash of an existing data encryption key.	When the ONU receives the Key_Control message and has generated new keying material.	See clause C.15.5.1 for the details of the protocol.
0x09	Acknowledgement	To indicate reception of specified downstream messages, to report PLOAM processing error, or to provide busy or no-message indication.	Upon receipt of a downstream message that requires acknowledgement, or when an upstream PLOAM allocation is granted, but no other message is available for transmission.	The OLT uses a received Acknowledgement PLOAM message to verify integrity of the PLOAM channel with the given ONU.

Exhibit 1010
IPR2024-00899, USPN 9,806,892
171 of 290

Table C.11.3 – Upstream PLOAM messages

Message type ID	Message name	Function	Trigger	Effect of receipt
0x10	Sleep_Request	To signal the ONU's intention to start or terminate power saving	When the ONU power management state machine (see clause C.16.1.3.1) triggers a change between active behaviour and power saving behaviour.	The OLT either grants the ONU request or instructs it to remain at full power, according to the OLT power management state machine of clause C.16.1.3.2.

C.11.3.3 Downstream PLOAM message formats

C.11.3.3.1 Burst_Profile message

Burst profile information is transmitted periodically, at intervals of hundreds of milliseconds or longer. The version of a specific burst profile definition may change over time, so an ONU is expected to update itself with the latest version each time the message appears. To ensure that all ONUs are up to date, the OLT is expected not to make use of the changed information until each ONU has had a chance to receive the updated burst profile at least twice while it is in either ActiveFree or ActiveHeld power management state. (See clause C.16.1.3.1 for ONU power management state machine description.)

The burst profile information accumulated by the ONU does not persist across ONU activations. A newly activated ONU may respond to a serial number grant only after it has acquired the burst profile information associated with the grant. More generally, an ONU in any state can respond to an allocation structure only if it has previously acquired the corresponding burst profile information.

The OLT is responsible to understand the consequences of sending both broadcast and unicast Burst_Profile messages. Specifically, a subsequent broadcast Burst_Profile message overwrites all unicast profiles with the same burst profile index.

Table C.11.4 provides information on the structure of Burst_Profile message.

Table C.11.4 – Burst_Profile message

Octet	Content	Description
1-2	ONU-ID	Directed message to one ONU or broadcast message to all ONUs. As a broadcast to all ONUs, ONU-ID = 0x03FF represents the Burst_Profile message for all ONUs that support 2.48832 Gbit/s upstream line rate and for all ONUs that support 9.95328 Gbit/s upstream line rate, ONU-ID = 0x03FE represents the Burst_Profile message for all ONUs that support 9.95328 Gbit/s upstream line rate. (See Appendix II, Section "FOR Annex C.11" for detailed discussion)
3	Message type ID	0x01, "Burst_Profile".
4	SeqNo	Eight-bit unicast or broadcast PLOAM sequence number, as appropriate.

Exhibit 1010
IPR2024-00899, USPN 9,806,892
172 of 290

Table C.11.4 – Burst_Profile message

Octet	Content	Description
5	Burst profile control	An octet of the form VVVV 0RPP, where: VVVV – Four-bit profile version. If the content of the profile changes, the OLT should ensure that the version also changes, so that the ONU can detect updates solely on the basis of the version field. R – Applicability of the message to specific upstream line rates: R = 0: The profile applies to ONUs transmitting at 2.48832 Gbit/s upstream line rate; R = 1: The profile applies to ONUs transmitting at 9.95328 Gbit/s upstream line rate. PP – Two-bit burst profile index.
6	Upstream FEC indication	0000 000F, where: F = 1: FEC on; F = 0: FEC off.
7	Delimiter length	0000 DDDD, where: DDDD – Delimiter length in octets; four-bit integer, range 0..8.
8-15	Delimiter	Aligned with the most significant end of the field; padded with 0x00; padding treated as "don't care" by the receiver.
16	Preamble length	0000 LLLL, where: LLLL – Preamble length in octets; four-bit integer; range 1..8.
17	Preamble repeat count	000P PPPP when R = 0; PPPP PPPP when R = 1. The value 0 specifies that no preamble is transmitted.
18-25	Preamble pattern	Preamble pattern, aligned with the most significant end of the field; padded with 0x00; padding treated as "don't care" by the receiver.
26-33	PON-TAG	An 8-byte static attribute of the OLT that is chosen by the operator and is used to bind the master session key (MSK) to the context of the security association (see clause C.15.3.3). Unless the profile version is incremented, PON-TAG is the same for Burst_Profile messages with all profile indices transmitted by the OLT. It is good practice to ensure that PON-TAG is unique within at least the operator's domain and fixed for the lifetime of the system.
34-40	Padding	Set to 0x00 by the transmitter; treated as "don't care" by the receiver.
41-48	MIC	Message integrity check, computed using the default PLOAM_IK in case of broadcast message, and using the ONU-specific derived shared PLOAM_IK in case of directed message.

NOTE – Equivalent to Table 11-5 of [ITU-T G.989.3]; it is not relevant to XGS-PON

C.11.3.3.2 Assign_ONU-ID message

Table C.11.6 provides information on the structure of Assign_ONU-ID message.

Exhibit 1010
IPR2024-00899, USPN 9,806,892
173 of 290

Table C.11.6 – Assign_ONU-ID message

Octet	Content	Description
1-2	ONU-ID	0x03FF, Broadcast ONU-ID.
3	Message type ID	0x03, "Assign_ONU-ID".
4	SeqNo	Eight-bit broadcast PLOAM sequence number.
5-6	ONU-ID	LSB-justified 10-bit assigned ONU-ID value padded with 6 MSB zeros; range 0..1 020 (0x0000..0x03FC).
7-10	Vendor_ID	See clause C..11.2.6.1
11-14	VSSN	See clause C.11.2.6.2.
15	Upstream nominal line rate indicator	0000 000U, where: U – upstream nominal line rate, U = 0, 2.5 Gbit/s; U = 1, 10 Gbit/s. This indicator is only applicable for an ONU supporting multiple (9.95328 and 2.48832 Gbit/s) upstream line rates to select the instructed upstream nominal line rate to operate.
16-40	Padding	Set to 0x00 by the transmitter; treated as "don't care" by the receiver.
41-48	MIC	Message integrity check, computed using the default PLOAM integrity key.

C.11.3.3.3 Ranging_Time message

In its typical application, the Ranging_Time message is used to establish the equalization delay for a given ONU (directed message), as described in clause C.12. As a broadcast message, the Ranging_Time message may be used to specify a delay offset adjustment, either positive or negative, to all ONUs, after a protection switching event. The OLT is responsible to consider the interaction between broadcast Ranging_Time message and possible power management states of its ONUs.

Table C.11.7 provides information on the structure of Ranging_Time message.

Table C.11.7 – Ranging_Time message

Octet	Content	Description
1-2	ONU-ID	Directed message to one ONU or broadcast message to all ONUs. As a broadcast to all ONUs, ONU-ID = 0x03FF.
3	Message type ID	0x04, "Ranging_Time".
4	SeqNo	Eight-bit unicast or broadcast PLOAM sequence number.
5	Control octet	An octet of the form 0000 0XSP that indicates how the EqualizationDelay field is to be interpreted. P = 1: The delay in bytes 6..9 is absolute; ignore S. P = 0: The delay in bytes 6..9 is relative; S determines sign. S = 0: Positive: increase the current EqD by the specified value. S = 1: Negative: decrease the current EqD by the specified value. X: Set to 0 by the transmitter.
6-9	Equalization-Delay	Equalization delay value, expressed in integer bit periods with respect to the nominal upstream line rate of 2.48832 Gbit/s, regardless of the actual upstream line rate of the ONU.
10-13	Downstream PON-ID	Octets are not used for XGS-PON, set to 0x00 by the transmitter.

Exhibit 1010
IPR2024-00899, USPN 9,806,892
174 of 290

Table C.11.7 – Ranging_Time message

Octet	Content	Description
14-17	Upstream PON-ID	Octets are not used for XGS-PON, set to 0x00 by the transmitter.
18-40	Padding	Set to 0x00 by the transmitter; treated as "don't care" by the receiver.
41-48	MIC	Message integrity check. computed using the default PLOAM_IK in case of broadcast message, and using the ONU-specific derived shared PLOAM_IK in case of directed message.

C.11.3.3.4 Deactivate_ONU-ID message

Table C.11.8 provides information on the structure of Deactivate_ONU-ID message.

Table C.11.8 – Deactivate_ONU-ID message

Octet	Content	Description
1-2	ONU-ID	Directed message to one ONU or broadcast message to all ONUs. As a broadcast to all ONUs, ONU-ID = 0x03FF.
3	Message type ID	0x05, "Deactivate_ONU-ID".
4	SeqNo	Eight-bit unicast or broadcast PLOAM sequence number, as appropriate.
5-40	Padding	Set to 0x00 by the transmitter; treated as "don't care" by the receiver.
41-48	MIC	Message integrity check, computed using the default PLOAM integrity key.

C.11.3.3.5 Disable_Serial_Number message

Table C.11.9 provides information on the structure of Disable_Serial_Number message.

Table C.11.9 – Disable_Serial_Number message

Octet	Content	Description
1-2	ONU-ID,	0x03FF, Broadcast ONU-ID.
3	Message type ID	0x06, "Disable_Serial_Number".
4	SeqNo	Eight-bit broadcast PLOAM sequence number.
5	Disable/enable	0xFF: The ONU with this serial number is denied upstream access. 0x00: The ONU with this serial number is allowed upstream access. 0x0F: All ONUs are denied upstream access. The content of bytes 6..13 is ignored. 0x3F: This codepoint is not used for XGS-PON. 0xF0: All ONUs are allowed upstream access.
6-9	Vendor_ID	See clause C.11.2.6.1.
10-13	VSSN	See clause C.11.2.6.2.
14-40	Padding	Set to 0x00 by the transmitter; treated as "don't care" by the receiver.

Exhibit 1010
IPR2024-00899, USPN 9,806,892
175 of 290

Table C.11.9 – Disable_Serial_Number message

Octet	Content	Description
41-48	MIC	Message integrity check, computed using the default PLOAM integrity key.

C.11.3.3.6 Request_Registration message

Table C.11.10 provides information on the structure of Request_Registration message.

Table C.11.10 – Request_Registration message

Octet	Content	Description
1-2	ONU-ID	Directed message to one ONU.
3	Message type ID	0x09, "Request_Registration".
4	SeqNo	Eight-bit unicast PLOAM sequence number.
5-40	Padding	Set to 0x00 by the transmitter; treated as "don't care" by the receiver.
41-48	MIC	Message integrity check, computed using the default PLOAM integrity key.

C.11.3.3.7 Assign_Alloc-ID message

Table C.11.11 provides information on the structure of Assign_Alloc-ID message.

Table C.11.11 – Assign_Alloc-ID message

Octet	Content	Description
1-2	ONU-ID	Directed message to one ONU.
3	Message type ID	0x0A,"Assign_Alloc-ID".
4	SeqNo	Eight-bit unicast PLOAM sequence number.
5-6	Alloc-ID-value	14 bits, aligned to the least significant end. The most significant bits are set to 0 by the transmitter and treated as "don't care" by the receiver.
7	Alloc-ID-type	0x01: XGEM-encapsulated payload. 0xFF: Deallocate this Alloc-ID. Other values are reserved.
8-9	Alloc-ID scope	Octets are not used for XGS-PON, set to 0x00 by the transmitter.
10-40	Padding	Set to 0x00 by the transmitter; treated as "don't care" by the receiver.
41-48	MIC	Message integrity check, computed using the ONU-specific derived shared PLOAM integrity key.

Exhibit 1010
IPR2024-00899, USPN 9,806,892
176 of 290

C.11.3.3.8 Key_Control message

Table C.11.12 provides information on the structure of Key_Control message.

Table C.11.12 – Key_Control message

Octet	Content	Description
1-2	ONU-ID	Directed or broadcast message to instruct one or all tuned-in ONUs to generate new keying material or confirm their existing keys. As a broadcast message, ONU-ID = 0x03FF.
3	Message type ID	0x0D, "Key_Control".
4	SeqNo	Eight-bit unicast or broadcast PLOAM sequence number, as appropriate.
5	Reserved	Set to 0x00 by the transmitter; treated as "don't care" by the receiver.
6	Control flag	0000 000C, where: C = 0: Generate and send a new key. C = 1: Confirm the existing key.
7	Key index	0000 00BB, where: BB – Key index 01: First key of a key pair. 10: Second key of a key pair.
8	Key_Length	Required key length, bytes. The value 0 specifies a key of 256 bytes (Note).
9-40	Padding	Set to 0x00 by the transmitter; treated as "don't care" by the receiver.
41-48	MIC	Message integrity check, computed using the default PLOAM_IK in case of broadcast message, and using the ONU-specific derived shared PLOAM_IK in case of directed message.
NOTE – This parameter supports the long-term extensibility of the data encryption key exchange protocol. The currently specified cryptographic method for the data encryption, the AES-128 cipher (see clause C.15.4) uses the fixed size key of 16 bytes.		

C.11.3.3.9 Sleep_Allow message

Table C.11.13 provides information on the structure of Sleep_Allow message.

Table C.11.13 – Sleep_Allow message

Octet	Content	Description
1-2	ONU-ID	Directed or broadcast ONU-ID. As a broadcast message, ONU-ID = 0x03FF.
3	Message type ID	0x12, "Sleep_Allow".
4	SeqNo	Eight-bit unicast or broadcast PLOAM sequence number, as appropriate.
5	Control flag	0000 000A, where: A = 0: Sleep allowed OFF. A = 1: Sleep allowed ON. Other values reserved.

Exhibit 1010
IPR2024-00899, USPN 9,806,892
177 of 290

Table C.11.13 – Sleep_Allow message

Octet	Content	Description
6-40	Padding	Set to 0x00 by the transmitter; treated as "don't care" by the receiver.
41-48	MIC	Message integrity check, computed using the default PLOAM_IK in case of broadcast message, and using the ONU-specific derived shared PLOAM_IK in case of directed message.

C.11.3.3.10 Calibration_Request message

Not applicable to XGS-PON.

NOTE – Equivalent to Table 11-14 of [ITU-T G.989.3]; it is not relevant to XGS-PON

C.11.3.3.11 Adjust_Tx_Wavelength message

Not applicable to XGS-PON.

NOTE – Equivalent to Table 11-15 of [ITU-T G.989.3]; it is not relevant to XGS-PON

C.11.3.3.12 Tuning_Control message

Not applicable to XGS-PON.

NOTE – Equivalent to Table 11-16 of [ITU-T G.989.3]; it is not relevant to XGS-PON

C.11.3.13 System_Profile message

Not applicable to XGS-PON.

NOTE – Equivalent to Table 11-17 of [ITU-T G.989.3]; it is not relevant to XGS-PON

C.11.3.3.14 Channel_Profile message

Not applicable to XGS-PON.

NOTE 1 – Equivalent to Table 11-18 of [ITU-T G.989.3]; it is not relevant to XGS-PON

NOTE 2 – Equivalent to Table 11-19 of [ITU-T G.989.3]; it is not relevant to XGS-PON

C.11.3.3.15 Protection_Control message

Not applicable to XGS-PON.

NOTE – Equivalent to Table 11-20 of [ITU-T G.989.3]; it is not relevant to XGS-PON

C.11.3.3.16 Change_Power_Level message

Not applicable to XGS-PON.

NOTE – Equivalent to Table 11-21 of [ITU-T G.989.3]; it is not relevant to XGS-PON

C.11.3.3.17 Power_Consumption_Inquire message

Not applicable to XGS-PON.

NOTE – Equivalent to Table 11-22 of [ITU-T G.989.3]; it is not relevant to XGS-PON

C.11.3.3.18 Rate_Control message

Not applicable to XGS-PON.

NOTE – Equivalent to Table 11-23 of [ITU-T G.989.3]; it is not relevant to XGS-PON.

C.11.3.3.19 Reboot_ONU message

The reboot ONU message is described in Table C.11.23A.

Exhibit 1010
IPR2024-00899, USPN 9,806,892
178 of 290

Table C.11.23A – Reboot_ONU message

Octet	Content	Description
1-2	ONU-ID	Directed message to one ONU or broadcast message to all ONUs. A single ONU is addressed in this message either through an assigned ONU-ID or through Vendor_ID and VSSN with ONU-ID set to 0x3FF (broadcast ID). All ONUs are addressed on the PON when ONU-ID is set to 0x3FF (broadcast ID) and Vendor-ID and VSSN fields are set to 0x00.
3	Message type ID	0x1D, "Reboot_ONU".
4	SeqNo	Eight-bit unicast or broadcast PLOAM sequence number, as appropriate.
5-8	Vendor_ID	See clause 11.2.6.1 of [ITU-T G.989.3]. This field is inspected only when ONU-ID is set to 0x03FF (broadcast ID).
9-12	VSSN	See clause 11.2.6.2 of [ITU-T G.989.3]. This field is inspected only when ONU-ID is set to 0x03FF (broadcast ID).
13	Reboot depth	This field defines the enumerated values: 0x0 MIB Reset (MIB reset is defined in clause 9.1.3 of [ITU-T G.988]) 0x1 Perform equivalent of OMCI reboot (clause A.2.35 of [ITU-T G.988]) 0x2 Perform equivalent of power cycle reboot 0x3 Configuration reset, then perform MIB reset and reboot* 0x4..0Xff Reserved *Sometimes ONU may not come up even after OMCI reboot or power-cycle reboot due to saved configuration in ONUs non-volatile memory. When action is set to 0x3, ONU will reset, clear its previously saved configuration (e.g., VoIP configuration and dual managed ONU configuration), perform a MIB reset and then reboot. Factory configuration (serial number and MAC) and registration ID, software images and indication of which image is committed should not be affected by this action. These mechanisms are intended to be used as a last resort to revive the ONU. Note that applicable ONU states of the Reboot_ONU PLOAM is up to the implementation
14	Reboot image	This field defines which image will be loaded and executed (i.e., which image will be active) upon reboot using the enumerated values: 0x0 Load and execute the image that is currently committed 0x1 Load and execute the image that is not currently committed This field is ignored when Reboot depth = 0x0
15	ONU state	This field defines the enumerated values: 0x0 Reboot if ONU is in any state 0x1 Reboot only if ONU in states O1, O2-3

Exhibit 1010
IPR2024-00899, USPN 9,806,892
179 of 290

Table C.11.23A – Reboot_ONU message

Octet	Content	Description
16	Flags	Bits 2-1: 00 Reboot regardless of POTS/VoIP call state 01 Reboot only if no POTS/VoIP calls are in progress 10 Reboot only if no emergency call is in progress 11 Reserved Bits 8-3: Reserved
17-40	Padding	Set to 0x00 by the transmitter; treated as "don't care" by the receiver.
41-48	MIC	Message integrity check, computed using the default PLOAM integrity key.

C.11.3.4 Upstream PLOAM message formats

C.11.3.4.1 Serial_Number_ONU message

Table C.11.24 provides information on the structure of Serial_Number_ONU message.

Table C.11.24 – Serial_Number_ONU message

Octet	Content	Description
1-2	ONU-ID	0x03FF, Unassigned ONU-ID
3	Message type ID	0x01, "Serial_Number_ONU"
4	SeqNo	Set to 0x00 for all instances of Serial_Number_ONU PLOAM message.
5-8	Vendor_ID	See clause C.11.2.6.1.
9-12	VSSN	See clause C.11.2.6.2.
13-16	Random_delay	The random delay used by the ONU when sending this message, expressed in integer bit periods with respect to the nominal upstream line rate of 2.48832 Gbit/s, regardless of the actual upstream line rate of the ONU.
17-18	Correlation tag	Octets are not used for XGS-PON, set as 0x00 by the transmitter.
19-22	Current downstream PON-ID	Octets are not used for XGS-PON, set as 0x00 by the transmitter.
23-26	Current upstream PON-ID	Octets are not used for XGS-PON, set as 0x00 by the transmitter.
27-34	Calibration record status	Octets are not used for XGS-PON, set as 0x00 by the transmitter.
35	Tuning granularity	Octet is not used for XGS-PON, set as 0x00 by the transmitter.
36	Step tuning time	Octet is not used for XGS-PON, set as 0x00 by the transmitter.

Exhibit 1010
IPR2024-00899, USPN 9,806,892
180 of 290

Table C.11.24 – Serial_Number_ONU message

Octet	Content	Description
37	Upstream line rate capability	A bitmap of the form 0000 00HL indicating the ONU's upstream nominal line rate capability: H – Upstream nominal line rate of 9.95328 Gbit/s H = 0: not supported H = 1: supported L – Upstream nominal line rate of 2.48832 Gbit/s L = 0: supported L = 1: not supported
38	Attenuation	Octet is not used for XGS-PON, set as 0x00 by the transmitter.
39	Power levelling capability	Octet is not used for XGS-PON, set as 0x00 by the transmitter.
40	Padding	Set to 0x00 by the transmitter; treated as "don't care" by the receiver.
41-48	MIC	Message integrity check computed using the default PLOAM integrity key.

C.11.3.4.2 Registration message

Table C.11.25 provides information on the structure of Registration message.

Table C.11.25 – Registration message

Octet	Content	Description
1-2	ONU-ID	ONU-ID of the message sender.
3	Message type ID	0x02, "Registration".
4	SeqNo	Repeated from downstream Request_Registration message, or 0 if generated in response to a ranging grant in the Ranging state (O4).
5-40	Registration_ID	A string of 36 octets that has been assigned to the subscriber on the management level, entered into and stored in non-volatile storage at the ONU. Registration_ID may be useful in identifying a particular ONU installed at a particular location. The default is a string of 0x00 octets (Note).
41-48	MIC	Message integrity check computed using the default PLOAM integrity key.
NOTE – It is recommended that the Registration_ID be a string of ASCII characters, justified in the lower-numbered bytes of the registration message, and with 0x00 values in unused byte positions.		

Exhibit 1010
IPR2024-00899, USPN 9,806,892
181 of 290

C.11.3.4.3 Key_Report message

Table C.11.26 provides information on the structure of Key_Report message.

Table C.11.26 – Key_Report message

Octet	Content	Description
1-2	ONU-ID	ONU-ID of the message sender.
3	Message type ID	0x05, "Key_Report".
4	SeqNo	Repeats the value from the downstream Key_Control message. If the length of the keying material requires that several Key_Report messages be sent upstream, the sequence number is the same in each of them.
5	Report type	0000 000R R – Report type: R = 0: New key; R = 1: Report on existing key.
6	Key index	0000 00BB, where: BB – Key index: 01: First key of a key pair; 10: Second key of a key pair.
7	Fragment number	0000 0FFF FFF: Three-bit fragment number, range 0..7. The first fragment is number 0. The last fragment may be partial, padded with 0x00 at the least significant end (Note).
8	Reserved	Set to 0x00 by the transmitter and treated as "don't care" by the receiver
9-40	Key_Fragment	Key fragment, 32 bytes. Any padding that may be required is in the higher-numbered bytes of the message. For a report on the existing key, a single fragment containing the key name is sent. Key_Name = AES_CMAC (KEK, encryption_key | 0x33313431353932363533353839373933, 128). For a new key, KEK_encrypted key is used. KEK_Encrypted_key = AES_ECB_128 (KEK, encryption_key).
41-48	MIC	Message integrity check, computed using the ONU-specific derived shared PLOAM integrity key.
NOTE – This parameter supports the long-term extensibility of the data encryption key exchange protocol. Both the currently specified (see clause C.15.4) cryptographic method for the data encryption (AES-128) and its immediate extension (AES-192 or AES-256) require a single key fragment and only one Key_Report PLOAM message to transmit the key.		

Exhibit 1010
IPR2024-00899, USPN 9,806,892
182 of 290

C.11.3.4.4 Acknowledgement message

Table C.11.27 provides information on the structure of Acknowledgement message.

Table C.11.27 – Acknowledgement message

Octet	Content	Description
1	ONU-ID	ONU-ID of the message sender.
3	Message Type ID	0x09, "Acknowledgement".
4	SeqNo	Same as downstream sequence number. If the ONU has no upstream message to send (keep-alive grant from OLT), it sets the upstream sequence number to 0x00.
5	Completion _code	Completion code: 0x00: OK; 0x01: No message to send; 0x02: Busy, preparing a response; 0x03: Unknown message type; 0x04: Parameter error; 0x05: Processing error. Other values are reserved.
6	Attenuation	Octet is not used for XGS-PON, set as 0x00 by the transmitter.
7	Power levelling capability	Octet is not used for XGS-PON, set as 0x00 by the transmitter.
8-40	Padding	Set to 0x00 by the transmitter; treated as "don't care" by the receiver.
41-48	MIC	Message integrity check, computed using the ONU-specific derived shared PLOAM integrity key.

C.11.3.4.5 Sleep_Request message

Table C.11.28 provides information on the structure of Sleep_Request message.

Table C.11.28 – Sleep_Request message

Octet	Content	Description
1-2	ONU-ID	ONU-ID of the message sender.
3	Message type ID	0x10, "Sleep_Request".
4	SeqNo	Always 0x00
5	Activity _level	Activity Level: 0x00: Sleep_Request (Awake) 0x03: Sleep_Request(WSleep) Watchful sleep mode request: when in a LowPower state, the ONU periodically checks the downstream traffic for wake-up indications from the OLT. Other values are reserved.
6-40	Padding	Set to 0x00 by the transmitter and treated as "don't care" by the receiver.
41-48	MIC	Message integrity check, computed using the ONU-specific derived shared PLOAM integrity key.

Exhibit 1010
IPR2024-00899, USPN 9,806,892
183 of 290

C.11.3.4.6 Tuning_Response message

Not applicable to XGS-PON.

NOTE – Equivalent to Table 11-29 of [ITU-T G.989.3]; it is not relevant to XGS-PON

C.11.3.4.7 Power_Consumption_Report message

Not applicable to XGS-PON.

NOTE – Equivalent to Table 11-30 of [ITU-T G.989.3]; it is not relevant to XGS-PON

C.11.3.4.8 Rate_Response message

Not applicable to XGS-PON.

NOTE – Equivalent to Table 11-31 of [ITU-T G.989.3]; it is not relevant to XGS-PON

C.12 XGS-PON ONU activation

C.12.1 XGS-PON ONU activation cycle

C.12.1.1 Overview

This clause specifies the TC layer behaviour of a XGS-PON ONU using a state machine. The unique state of this state machine that a XGS-PON ONU enters upon powering up is referred to as Initial state. A XGS-PON ONU may re-enter the Initial state under certain specified conditions. An evolution of the ONU state between two consecutive re-entries into the Initial state is known as an *activation cycle*, and the state machine itself is referred to as *the ONU activation cycle state machine*. As a matter of convenience, the ONU activation cycle state machine can be partitioned into two blocks: (1) activation proper, and (2) operation.

C.12.1.2 Activation outline

The activation proper includes three phases: downstream synchronization, serial number acquisition (ONU discovery) and ranging.

During the downstream synchronization phase, the ONU, while remaining passive, initializes a local instance of the downstream synchronization state machine, attains synchronization to the downstream signal and starts learning the burst profile parameters. The phase concludes with the ONU proceeding with activation.

During the serial number acquisition/ONU discovery phase, the ONU, while continuing to collect the burst profile parameters, enables its transmitter and announces its presence on the PON by responding to serial number grants. The phase concludes when the OLT, which has discovered the new ONU by its serial number, assigns a unique ONU-ID to the ONU.

During the ranging phase, the ONU responds to directed ranging grants. The phase concludes when the OLT completes the round-trip delay measurements, computes the equalization delay and communicates the equalization delay to the ONU.

C.12.1.3 Causal sequence of activation events

The OLT controls the ONU activation by means of issuing serial number and ranging grants and exchanging upstream and downstream PLOAM messages. The outline of the activation events in their causal order is given below:

– The activating ONU attains PSync and superframe synchronization, and collects the TC-layer protocol version and the burst profile information. Actions to take upon a mismatch between the OLT and ONU TC-layer version are implementation specific.

– The ONU starts responding to the serial number grants, announcing its presence on the PON with a Serial_Number_ONU PLOAM message. An ONU transmitting at the upstream line rate 10G responds to serial number grants with the corresponding broadcast Alloc-ID

Exhibit 1010
IPR2024-00899, USPN 9,806,892
184 of 290

specified in Table C.6.5. The Serial_Number_ONU PLOAM message declares the ONU's serial number and the random delay used for transmission.

- When the OLT discovers the serial number of a newly connected ONU, it may assign an ONU-ID to the ONU using the Assign_ONU-ID PLOAM message.
- The OLT optionally issues a directed ranging grant to a newly discovered ONU and prepares to accurately measure the response time.
- The ONU responds to a directed ranging grant with the Registration PLOAM message.
- The OLT optionally performs initial authentication of the ONU based on the Registration_ID, computes the individual equalization delay and communicates this equalization delay to the ONU using the Ranging_Time PLOAM message.
- The ONU adjusts the start of its upstream PHY frame clock based on its assigned equalization delay.
- The ONU completes activation and starts operation.

For the ONUs in operation, the OLT monitors the received signal strength indication (RSSI), the phase, and the BER of the arriving upstream transmissions. Based on the monitored information, the OLT may re-compute and dynamically update the equalization delay for any ONU.

C.12.1.4 XGS-PON ONU activation cycle state machine

C.12.1.4.1 States, timers and inputs

Table C.12.1provides information regarding ONU activation cycle states.

Table C.12.1 – ONU activation cycle states

ONU State/Substate		Semantics
Ref	**Full name**	
O1	Initial state	The ONU enters the Initial state (O1) when it originally powers up and may re-enter this state during the operation, for example, when being deactivated or when being enabled after an emergency stop. The transmitter is off. Upon entry to Initial state (O1), the ONU-ID, default and explicitly assigned Alloc-IDs, default XGEM Port-ID, burst profiles, and equalization delay, should be discarded. The ONU synchronization state machine (see clause C.10.1.1.3) is initialized.
	O1/Off-Sync ≡ O1.1	The substate is the entry point to Initial state (O1). The ONU searches for and attempts to synchronize to a downstream signal. Once the downstream synchronization is attained, the ONU transitions to the O1/Profile Learning substate.
	O1/Profile Learning ≡ O1.2	The ONU parses the PLOAM partition of downstream FS frames and starts collecting burst profile information. Once sufficient information is collected the ONU proceeds with activation and transitions to Serial Number state (O2-3).
O2-3	Serial Number state	Once an ONU receives a serial number grant, it responds with a Serial_Number_ONU PLOAM message The ONU awaits for and acts upon the discovery feedback from the OLT in the form of Assign_ONU-ID, and transitions to the Ranging state (O4) to continue activation.

Exhibit 1010
IPR2024-00899, USPN 9,806,892
185 of 290

Table C.12.1 – ONU activation cycle states

ONU State/Substate		Semantics
Ref	**Full name**	
O4	Ranging state	The ONU starts Ranging timer TO1. While awaiting the assignment of equalization delay by the OLT, the ONU responds to the directed ranging grants. If the ONU receives a ranging grant with a burst profile known from a previously received Burst_Profile PLOAM message, it transmits a FS burst carrying a Registration PLOAM message. The ONU ignores the values of the DBRu flag and GrantSize field of the ranging grant allocation structure. Once the ONU receives the Ranging_Time message with absolute equalization delay, it transitions to the Operation state (O5). If timer TO1 expires, the ONU discards the assigned ONU-ID value along with default Alloc-ID and default OMCC XGEM port-ID and transitions to the Serial Number state (O2-3), while keeping the collected profile information.
O5	Operation state	The ONU processes downstream frames and transmits upstream bursts, as directed by the OLT, to the full extent of the present specification.
	O5/Associated ≡ O5.1	This substate is the entry point to Operation state (O5). The upstream SDU fragmentation rules are applicable without additional restrictions.
O6	Intermittent LODS state	The ONU enters this state from either substate of the Operation state (O5) following the loss of downstream synchronization. Upon entry to the Intermittent LODS state (O6), the ONU starts timer TO2. If the downstream signal is re-acquired before timer TO2 expires, the ONU transitions back into the Operation state (O5). Upon timer TO2 expiration, the ONU transitions to the Initial state (O1).
O7	Emergency Stop state	If an ONU receives a Disable_Serial_Number message with the 'disable' option (pertaining to the given ONU as specified by the Disable/Enable parameter of the message), it switches its laser off and transitions to the Emergency Stop state (O7). When in the Emergency Stop state, the ONU keeps the downstream synchronization state machine running and parses the PLOAM partition of downstream FS frames, but is prohibited from forwarding data in the downstream direction or sending data in the upstream direction. If the ONU in the Emergency Stop state (O7) receives a Disable_Serial_Number message with the 'enable' option, it transitions to the Initial state (O1). The Emergency Stop state persists over ONU reboot and power cycle.

Table C.12.2 provides information regarding ONU activation cycle state machine timers.

Table C.12.2 – ONU activation cycle state machine timers

Timer	Full name	State	Semantics and initial value
TO1	Ranging timer	O4	Timer TO1 is used to abort an unsuccessful activation attempt by limiting the overall time an ONU can remain in the Ranging state (O4). The recommended initial value of timer TO1 is 10 seconds.
TO2	Loss of downstream synchronization (LODS) timer.	O6	Timer TO2 is used to assert a failure to recover from an intermittent LODS condition by limiting the time an ONU can remain in the Intermittent LODS state (O6).

Exhibit 1010
IPR2024-00899, USPN 9,806,892
186 of 290

The Applicable states column in Table C.12.3 includes all states where the event may occur in principle, including due to protocol error. Whether an event requires processing, is indicated in Table C.12.4.

Table C.12.3 – ONU activation cycle state machine inputs

Input	Applicable states	Semantics
Downstream synchronization events		
DSYNC	O1/Off-Sync; O6.	Downstream synchronization attained. The event is generated by the downstream synchronization state machine upon transition from the Pre-Sync state to the Sync state.
LODS	All states and substates, except O1/Off-Sync; O6.	Loss of downstream synchronization. The event is generated by the downstream synchronization state machine upon transition from the Re-Sync state to the Hunt state.
Timer events		
TO1 expires	O4	Timer expiration.
TO2 expires	O6	Timer expiration.
BWmap events		
SN grant	O1/Profile Learning, O2-3, O4, O5, O7	A SN grant is an allocation to one of the specified broadcast Alloc-IDs with a known burst profile, specific StartTime, and the PLOAMu flag set. An ONU in the Serial Number state (O2-3) recognizes a SN grant event when it receives a SN grant with known burst profile.
Directed PLOAM grant	O4, O5, O7	An allocation to one of the ONU's Alloc-IDs with a known burst profile and PLOAMu flag set. A directed PLOAM grant is an allocation with the StartTime and GrantSize within their respective ranges (see clause C.8.1.1.3). An ONU in state O4 interprets a directed PLOAM allocation to the default Alloc-ID as a ranging grant.
Data grant	O4, O5, O7	An allocation to one of the ONU's Alloc-IDs with a known burst profile and non-zero GrantSize.
PLOAM events		
ONU-ID assignment	O1/Profile Learning, O2-3, O4, O5, O7	Assign_ONU-ID PLOAM message with matching SN received.
EqD assignment	O1/Profile Learning, O2-3, O4, O5, O7	Directed Ranging_Time PLOAM message with absolute delay specification is received
Deactivate ONU-ID request	O1/Profile Learning, O2-3, O4, O5, O7	Deactivate_ONU-ID PLOAM message received (broadcast in Serial Number state (O2-3), either directed or broadcast in other states)
Disable SN request	O1/Profile Learning, O2-3, O4, O5, O7	Disable_Serial_Number PLOAM message with Disable option received (Disable All, Disable specific SN, or Disable_Discovery options in Serial Number state (O2-3), Disable All, Disable specific SN options in other states).
Enable SN request	O1/Profile Learning, O2-3, O4, O5, O7	Disable_Serial_Number PLOAM message with Enable option received (broadcast or SN-specific).
Other PLOAM messages(Note)		
Burst_Profile	O1/Profile Learning, O2-3, O4, O5, O7	PLOAM message of specific type is received.
Ranging_Time (relative adjustment)	O1/Profile Learning, O2-3, O4, O5, O7	Either directed or broadcast Ranging_Time PLOAM message with relative delay specification is received.

Exhibit 1010
IPR2024-00899, USPN 9,806,892
187 of 290

Table C.12.3 – ONU activation cycle state machine inputs

Input	Applicable states	Semantics
Request_Registration	O1/Profile Learning, O2-3, O4, O5, O7	PLOAM message of specific type is received.
Assign_Alloc-ID	O1/Profile Learning, O2-3, O4, O5, O7	PLOAM message of specific type is received.
Key_Control	O1/Profile Learning, O2-3, O4, O5, O7	PLOAM message of specific type is received.
Sleep_Allow	O1/Profile Learning, O2-3, O4, O5, O7	PLOAM message of specific type is received.
NOTE – Although the input events of this section do not drive the ONU state machine, their effect depends on the ONU state at the time the event occurs (the message is received).		

C.12.1.4.2 ONU state diagram

The ONU activation cycle state transition diagram is graphically represented in Figure C.12.1.

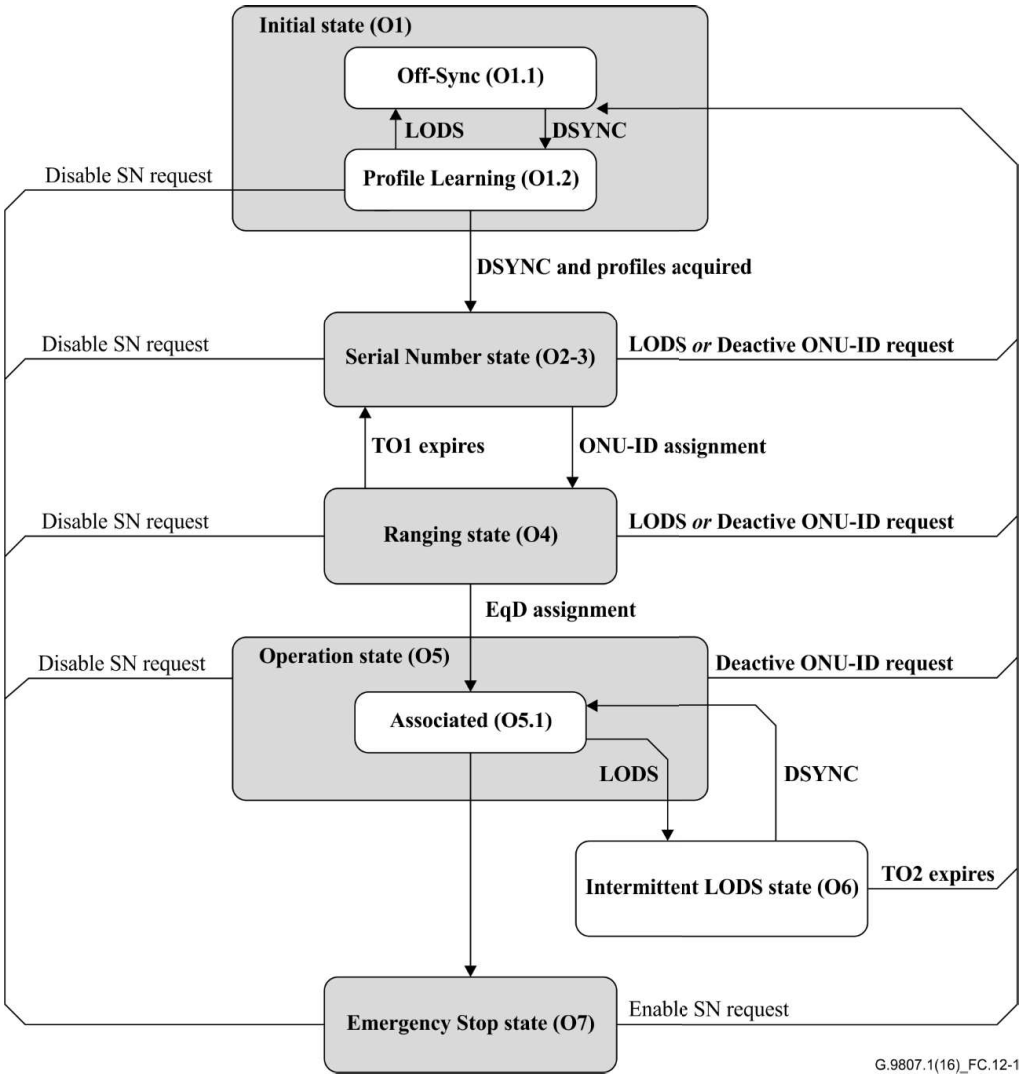

Figure C.12.1 – XGS-PON ONU state diagram

Exhibit 1010
IPR2024-00899, USPN 9,806,892
188 of 290

C.12.1.4.3 ONU state transition table

Table C.12.4 is more detailed than the state diagram of clause C.12.1.4.2. In Table C.12.4 a shaded cell indicates that an event is not applicable in the given state; a dash within a cell indicates that the event is not processed (ignored) in the given state. For the receipt of the PLOAM messages that do not drive the ONU activation cycle state machine, Table C.12.4 only indicates whether the event is processed (plus) or ignored (dash) in the given state. The specific effects of the PLOAM message receipt are discussed in the corresponding clauses of this Recommendation. The TC layer configuration parameter sets referenced in Table C.12.4 are specified in Table C.12.5.

Exhibit 1010
IPR2024-00899, USPN 9,806,892
189 of 290

Table C.12.4 – XGS-PON ONU activation cycle state transition table

Events	ONU activation cycle states										
	Initial state O1		Serial Number state O2-3	Ranging state O4	Operation state O5		Intermittent LODS O6	Emergency Stop state O7			
	Off-Sync O1.1	Profile Learning O1.2			Associated O5.1						
Power up If last operational state was O7 ==> O7 else ==> O1.1											
Downstream synchronization attained DSYNC	==> O1.2;						Stop TO2; ==> O5.1;				
Loss of downstream synchronization LODS		Discard I; ==> O1.1;	Discard I; ==> O1.1;	Discard III; ==> O1.1;	Start TO2; ==> O6;			–			
Initial Profile Acquired		==> O2-3									
Timer TO1 expires				Discard II; ==> O2-3;							
Timer TO2 expires							Discard V; ==> O1.1;				
SN grant		–	Send SN_ONU PLOAM;	–	–			–			
Directed PLOAM grant				Send Registration PLOAM message;	Send PLOAM message as required by general PLOAM protocol;			–			

Table C.12.4 – XGS-PON ONU activation cycle state transition table

Events	ONU activation cycle states									
	Initial state O1		Serial Number state O2-3	Ranging state O4	Operation state O5	Intermittent LODS O6	Emergency Stop state O7			
	Off-Sync O1.1	Profile Learning O1.2			Associated O5.1					
Data grant				–	Send data, unrestricted fragmentation		–			
ONU-ID assignment		–	Set II; Start TO1; ==> O4;	**if** ONU-ID consistent, Ignore; **else** {Discard III; Stop TO1; ==> O1.1;}	**if** ONU-ID consistent, Ignore; **else** {Discard V; ==> O1.1;}		–			
EqD assignment		–	–	{ Stop TO1; Set IV; Send ACK; ==> O5; }	{ Set IV; Send ACK;}		–			
Directed deactivate ONU-ID request		–	–	Discard III; Stop TO1; ==> O1.1;	Discard V; ==> O1.1;		–			
Broadcast deactivate ONU-ID request		–	Discard I; ==> O1.1;	Discard III; Stop TO1; ==> O1.1;	Discard V; ==> O1.1;		–			
Disable SN request		==> O7;	==> O7;	Stop TO1; ==> O7;	==> O7;		–			
Enable SN request		–	–	–	– –		Discard V; ==> O1.1			
Burst_Profile		+	+	+	+		–			
Ranging_Time (relative adjustment)		–	–	–	+		–			
Request_		–	–	–	+		–			

Exhibit 1010
IPR2024-00899, USPN 9,806,892
191 of 290

Table C.12.4 – XGS-PON ONU activation cycle state transition table

Events	ONU activation cycle states									
	Initial state O1		Serial Number state O2-3	Ranging state O4	Operation state O5	Intermittent LODS O6	Emergency Stop state O7			
	Off-Sync O1.1	Profile Learning O1.2			Associated O5.1					
Registration										
Assign_Alloc-ID		–	–	–	+		–			
Key_Control		–	–	–	+		–			
Sleep_Allow		–	–	–	+		–			

Exhibit 1010
IPR2024-00899, USPN 9,806,892
192 of 290

The composition of the TC layer configuration parameter sets referenced in Table C.12.4 is specified in Table C.12.5.

Table C.12.5 – Reference TC layer configuration parameter sets

TC layer configuration item	Parameter set						
	I	II	III	IV	V		
Burst profile parameters	X		X		X		
ONU-ID		X	X		X		
Default Alloc-ID		X	X		X		
Default XGEM Port-ID		X	X		X		
Assigned Alloc-IDs					X		
Equalization delay				X	X		
MSK and derived shared keys							

C.12.1.5 OLT support of the XGS-PON ONU activation

To allow ONUs to join or resume operations on the PON, the OLT regularly issues serial number grants.

A serial number grant is an allocation structure that is addressed to a broadcast Alloc-ID, carries a commonly known broadcast burst profile, and has the PLOAMu flag set. The serial number grants should have the DBRu flag reset, carry the GrantSize of 0 and be accompanied by an appropriate quiet window.

The frequency of serial number grants can be modulated by operational considerations, including pending ONU installations and the knowledge of temporarily inactive or failed ONUs.

Once the OLT receives a Serial_Number_ONU message from an ONU that is willing to join or resume operations on the PON, the OLT performs ONU-ID assignment and may issue directed ranging grants to that ONU in order to measure its round-trip delay.

If the OLT already knows the ONU, which is returning to the PON, for example, during recovery from loss of power, it is possible that the OLT issues an Assign_ONU-ID message to the ONU's known serial number. In this case, the ONU could transition through the Serial Number state (O2-3) into the Ranging state (O4) without ever having responded to a serial number grant.

The ranging grants are addressed to the default Alloc-ID of an ONU in the Ranging state (O4), carry a burst profile that has been previously communicated to the ONU, and have the PLOAMu flag set. The ranging grants should have the DBRu flag reset, carry the GrantSize of 0 and be accompanied by the appropriate quiet window. In some cases, for example, after a loss of power, the OLT may assign ONU-IDs and issue ranging grants to the known ONUs without explicitly rediscovering their serial numbers.

In deciding on the size of the quiet window to accompany a ranging grant, the OLT may use the ranging information obtained from the serial number response, during the previous activations of the ONU or, in case of a protected ODN, over an alternative ODN path.

If the OLT has previously measured the ONU's round-trip delay during the serial number acquisition phase, or during earlier activations of the ONU, it is possible that the OLT issues a Ranging_Time message with the previously calculated equalization delay. In this case, the ONU could transition through the Ranging state (O4) into the Operation state (O5) without having responded to a ranging grant.

Exhibit 1010
IPR2024-00899, USPN 9,806,892
193 of 290

When the ONU is in the Operation state (O5), the OLT may use any grant to that ONU to perform in-service round-trip delay measurement and equalization delay adjustment.

The OLT at its discretion may deactivate a previously assigned ONU-ID, forcing the ONU to discard all TC layer configuration information and re-enter the activation, or disable a specific serial number forcing that ONU into the Emergency Stop state and inhibiting any upstream transmissions or state transitions by that ONU until an explicit permission in the future.

The OLT may use equalization delay readjustment, ONU-ID deactivation and serial number disabling for the purposes of rogue ONU prevention, detection and isolation. In an extreme situation when rogue behaviour is exhibited by an ONU that has not been able to declare its serial number, the OLT may globally disable all the ONUs and subsequently re-enable the conformant ONUs one by one.

C.12.1.6 ONU power levelling

Not applicable to XGS-PON.

C.12.1.6.1 ONU-Activated power levelling

Not applicable to XGS-PON.

C.12.1.6.2 OLT-Activated power levelling

Not applicable to XGS-PON.

C.12.2 PtP WDM ONU activation cycle

Not applicable to XGS-PON.

C.13 XGS-PON OLT and ONU timing relationships

C.13.1 ONU transmission timing and equalization delay

The material presented in this clause is based on the following definitions:

- The start of the downstream PHY frame is the moment of transmission/reception of the first bit of the PSync field.
- The reference start time of an upstream PHY burst is the moment of transmission/reception of the first bit of the word or block identified by the StartTime of the corresponding bandwidth allocation structure. This is the first bit of the FS burst header.
- The start of the upstream PHY frame is the moment of transmission/reception (either actual or calculated) of the first bit of the word or block that, if present, would be identified by the StartTime pointer of zero value.
- The quiet window offset at the OLT is the elapsed time between the start of the downstream PHY frame in which the serial number grant or ranging grant is transmitted and the earliest possible start of an upstream PHY burst carrying the response PLOAM.
- The upstream PHY frame offset at the OLT, Teqd, is the elapsed time between the start of the downstream PHY frame carrying a specific BWmap and the upstream PHY frame implementing that BWmap[2].

An ODN can be characterized by two parameters: the minimum fibre distance, L_{min}, and the maximum differential fibre distance, D_{max}. These parameters are expressed in kilometres, are fixed by ODN design and are known to the OLT *a priori*. The fibre distance L_i, of ONU_i satisfies condition C.13-1:

$$L_{\min} \le L_i \le L_{\min} + D_{\max} \qquad \text{(C.13-1)}$$

[2] In [b-ITU-T G.984.3], this parameter is referred to as a zero-distance equalization delay.

Exhibit 1010
IPR2024-00899, USPN 9,806,892
194 of 290

C.13.1.1 Timing of ONU upstream transmissions

All ONU transmission events are referenced to the start of the downstream PHY frame carrying the BWmap that contains the corresponding burst allocation series. Note, in particular, that an ONU transmission event is not referenced to the receipt of the corresponding burst allocation series itself, which may occur at a variable time into the downstream PHY frame.

At all times, the ONU maintains a running upstream PHY frame clock that is synchronized to the downstream PHY frame clock and offset by a precise amount. The amount of offset is the sum of two values: the ONU response time and the requisite delay, as shown in Figure C.13.1.

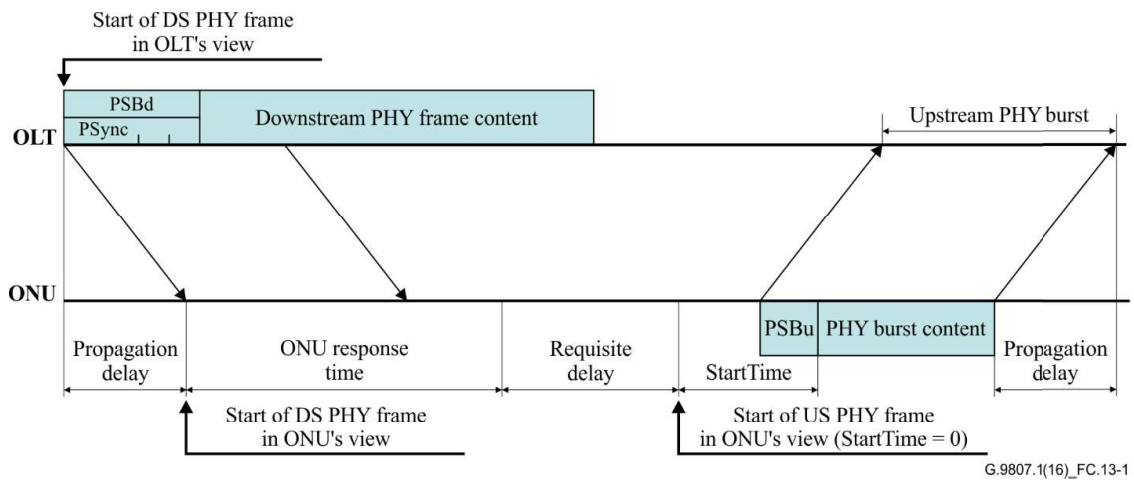

Figure C.13.1 – ONU timing diagram: General case

The range of ONU response time is a system-wide parameter that is chosen to give the ONU sufficient time to receive the downstream frame, including the upstream bandwidth map, perform downstream and upstream FEC as needed, and prepare an upstream response. All ONUs are required to have an ONU response time of 35 ± 1 μs; that is, $RspTime_{\min}$= 34 μs, $RspTime_{\max}$ = 36 μs. Further, each ONU_i is required to know its response time, $RspTime_i$.

The general term "requisite delay" refers to the total extra delay that an ONU may be required to apply to the upstream transmission beyond its regular response time. The purpose of the requisite delay is to compensate for variation of propagation and processing delays of individual ONUs, and to avoid or reduce the probability of collisions between upstream transmissions. The value of requisite delay changes with the state of the ONU is described below.

C.13.1.2 Timing relationships and quiet window during serial number acquisition

The following discussion is illustrated in Figure C.13.2.

Exhibit 1010
IPR2024-00899, USPN 9,806,892
195 of 290

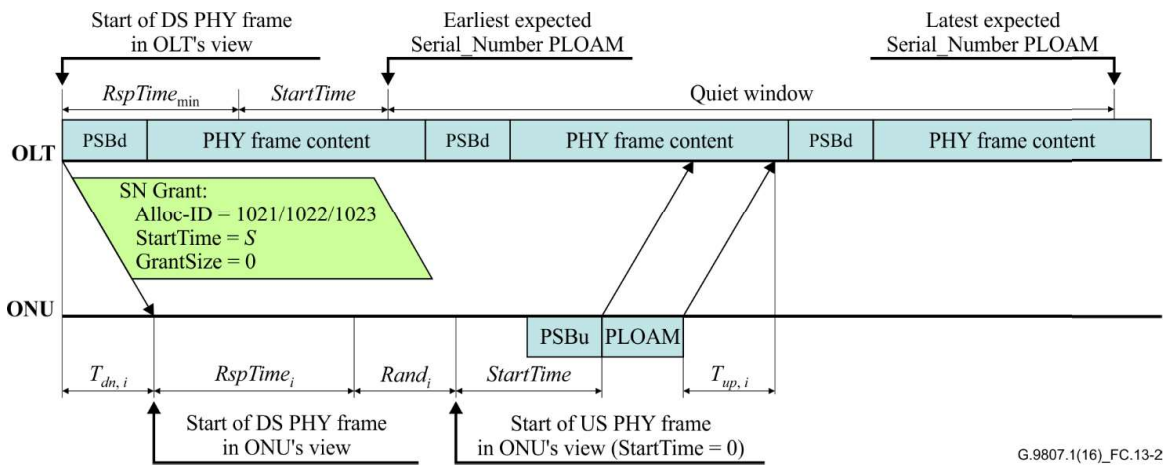

Figure C.13.2 – Timing relationships during serial number acquisition

While an ONU is in the Serial Number state (O2-3), it stays synchronized to the downstream signal. When an ONU in this state receives a serial number grant, it transmits a serial number response in the form of a Serial_Number_ONU PLOAM message.

To avoid collisions between a serial number response from an ONU in the Serial Number state (O2-3) and the regular upstream bursts from the ONUs in the Operation state (O5), the OLT opens a quiet window to temporarily suppress upstream transmission by the in-service ONUs.

Since the serial number grant is a broadcast bandwidth allocation addressed to all ONUs in the Serial Number state (O2-3), more than a single ONU may respond to it, and a collision may occur when more than one serial number response arrives at the OLT at the same time. To reduce the probability of collision, the requisite delay in the Serial Number state (O2-3) is a locally-generated random delay, $Rand_i$. The random delay has a range of 0-48 µs and is expressed in integer bit periods with respect to the nominal upstream line rate of 2.48832 Gbit/s, regardless of the actual upstream line rate of the ONU. For each response to a serial number grant, the ONU generates a new random delay.

The offset of the quiet window during serial number acquisition is determined by the minimum delays in the system, including the minimum round-trip propagation delay and minimum ONU processing time, as well as the dynamically generated StartTime value of the serial number grant (see Equation C.13-2):

$$W_0^{SN} = RspTime_{\min} + \frac{L_{\min}\left(n_{\mathrm{dn}} + n_{\mathrm{up}}\right)}{c} + StartTime \cdot Q_0 \qquad \text{(C.13-2)}$$

Here c is the speed of light in km/μs, $RspTime_{\min}$ is the minimum response time of an ONU, n_{dn} and n_{up} are group velocity refractive indices of the fibre at the downstream and upstream wavelengths, respectively, and Q_0 is the time quantum, that is, the time it takes to transmit 32 bits at 2.48832 Gbit/s.

The size of the quiet window during serial number acquisition is determined by the maximum variation of the unknown round-trip delay components and the duration of the serial number response burst. The unknown round-trip delay components include round-trip propagation delay, ONU response time, and ONU random delay. The serial number response burst includes preamble, delimiter, upstream FS header with a Serial_Number_ONU PLOAM message, and FS trailer (see Equation C.13-3).

$$W_{\Delta}^{SN} = RspTime_{\mathrm{var}} + \frac{D_{\max}\left(n_{\mathrm{dn}} + n_{up}\right)}{c} + Rand_{\max} + T_{SN} \qquad \text{(C.13-3)}$$

Exhibit 1010
IPR2024-00899, USPN 9,806,892
196 of 290

Here $RspTime_{var}$ is the variation of the ONU response time, and $Rand_{max}$ is maximum random delay. The duration of the serial number response burst, T_{SN}, which is, typically, less than 0.3 µs, is negligible compared with the other components.

For an ODN with a differential fibre distance of 20 km, the values are:

– 200 μs for the variation of round-trip propagation delay;

– 2 μs for the variation of ONU response time;

– 48 μs for the ONU's maximum random delay.

The suggested duration of the quiet window during serial number acquisition is 250 µs.

For an ODN with a differential fibre distance of 40 km, the values are:

– 400 μs for the variation of round-trip propagation delay;

– 2 μs for the variation of ONU response time;

– 48 μs for the ONU's maximum random delay.

The suggested duration of the quiet window during serial number acquisition is 450 μs.

C.13.1.3 Timing relationships and quiet window during ranging

The following discussion is illustrated in Figure C.13.3.

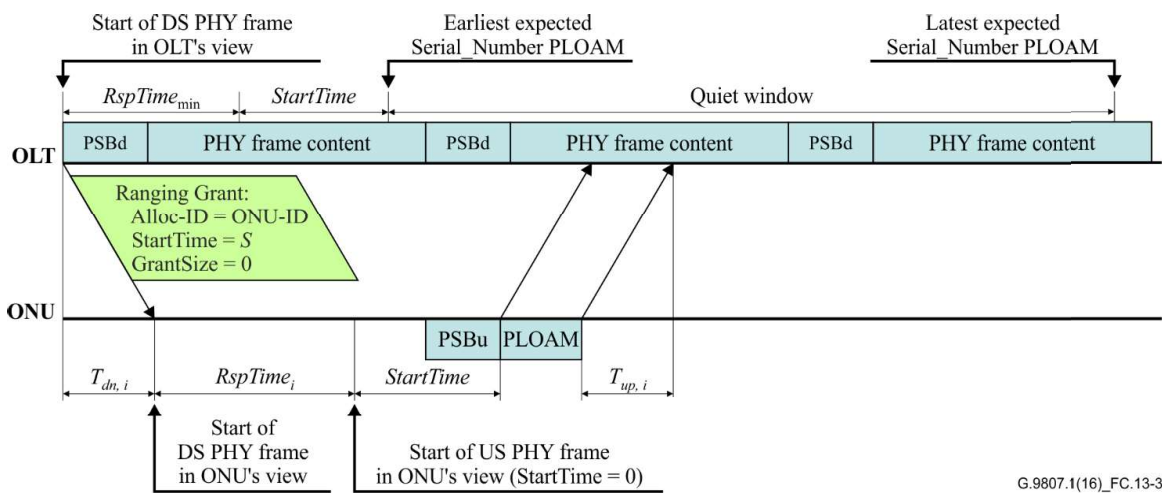

Figure C.13.3 – Timing relationships during ranging

An ONU enters the Ranging state (O4) upon assignment of ONU-ID. While in the Ranging state (O4), the ONU interprets any directed bandwidth allocation with the PLOAMu flag set as a ranging grant and responds to it with a Registration PLOAM message.

To avoid collisions between the ranging grant response and the regular upstream bursts from the ONUs in the Operation state (O5), the OLT opens a quiet window to temporarily suppress upstream transmission by the in-service ONUs. During ranging, the requisite delay is equal to zero.

The offset of the quiet window during ranging is determined by the minimum round-trip propagation delay and minimum ONU processing time, as well as the dynamically generated StartTime value of the ranging grant (see Equation C.13-4):

$$W_0^{RNG} = RspTime_{\min} + \frac{L_{\min}\left(n_{\mathrm{dn}} + n_{up}\right)}{c} + StartTime \cdot Q_0 \qquad \text{(C.13-4)}$$

Exhibit 1010
IPR2024-00899, USPN 9,806,892
197 of 290

The size of the quiet window during ranging is determined by the maximum variation of the unknown round-trip delay components and the duration of the registration burst. If the OLT has not already obtained a measure or estimate of the round-trip delay during serial number acquisition, the unknown round-trip delay components include round-trip propagation delay and ONU response time. The ranging response burst includes preamble, delimiter, upstream FS header with a Registration PLOAM message, and FS trailer (see Equation C.13-5).

$$W_{\Delta}^{RNG} = RspTime_{\text{var}} + \frac{D_{\max}\left(n_{dn} + n_{up}\right)}{c} + T_{RG} \qquad \text{(C.13-5)}$$

The duration of the ranging response burst T_{RG}, which is, typically, less than 0.3 µs, is negligible compared with the other components.

For an ODN with a differential fibre distance of 20 km, the values are:

– 200 μs for the variation of round-trip propagation delay;

– 2 μs for the variation of ONU response time.

The maximum suggested duration of the quiet window during ranging is 202 µs.

For an ODN with a differential fibre distance of 40 km, the values are:

– 400 µs for the variation of the round-trip propagation delay;

– 2 µs for the variation of the ONU response time.

The maximum suggested duration of the quiet window during ranging is 402 µs.

In practice, the maximum suggested values derived above may be reduced if the OLT makes use of the ranging information obtained from the serial number response, during the previous activations of the ONU or, in case of a protected ODN, over an alternative ODN path

C.13.1.4 Calculating the equalization delay

The OLT selects T_{eqd}, the upstream PHY frame offset, based on the ODN design parameters (see condition C.13-6):

$$T_{eqd} \geq RspTime_{\max} + \left(L_{\min} + D_{\max}\right)\frac{\left(n_{\text{dn}} + n_{up}\right)}{c} \qquad \text{(C.13-6)}$$

When the OLT issues a ranging grant to an ONU in the Ranging state (O4), the OLT accurately measures the elapsed time Δ_i^{RNG} between the downstream PHY frame containing the ranging grant and the upstream PHY burst containing the response Registration PLOAM (see Figure C.13.4). Given the selected upstream PHY frame offset, the equalization delay of the ONU is found as shown in Equation C.13-7:

$$EqD_i = T_{eqd} - RTD_i = T_{eqd} - \left(\Delta_i^{RNG} - StartTime \times Q_0\right) \qquad \text{(C.13-7)}$$

Alternatively, the OLT can measure the equalization delay directly by timing the duration between the actual and desired arrival times of the burst containing the Registration PLOAM message.

The value of equalization delay calculated by the OLT and communicated to the ONU is accurate to a single integer bit period with respect to the nominal upstream line rate of 2.48832 Gbit/s, regardless of the actual upstream line rate of the ONU. The ONU is required to maintain the granularity of the equalization delay adjustment of not more than 8 integer bit periods.

Once the ONU is supplied with its equalization delay value, it is considered synchronized to the beginning of the upstream PHY frame. The upstream data is transmitted within the interval specified by the allocation structure with respect to the beginning of the upstream PHY frame.

Exhibit 1010
IPR2024-00899, USPN 9,806,892
198 of 290

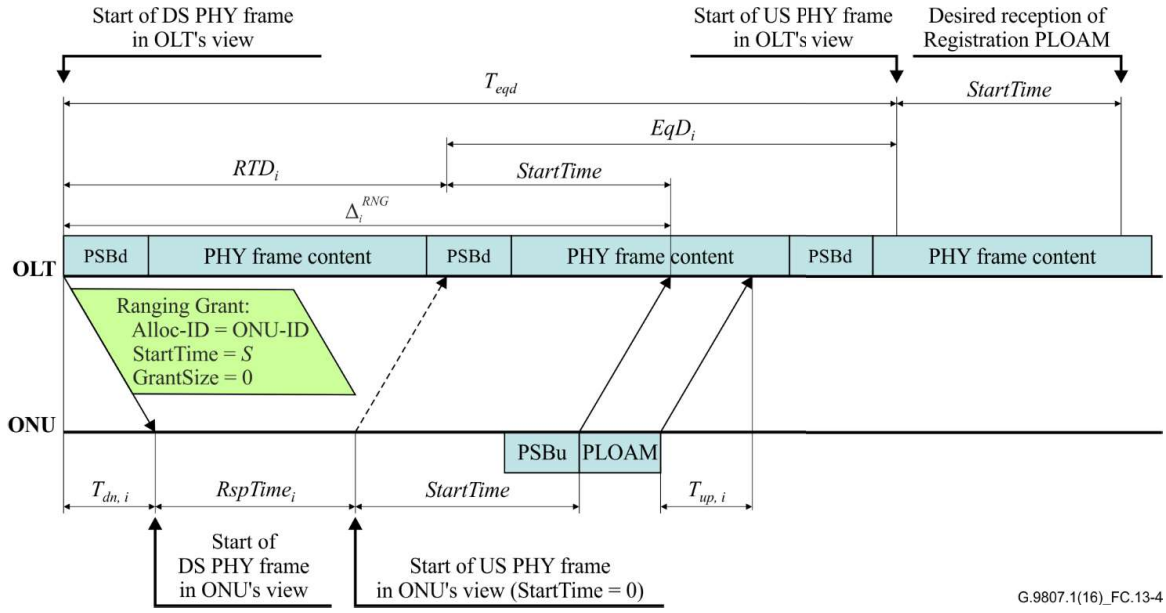

Figure C.13.4 – Equalization delay calculation during ranging

C.13.1.5 Timing relationships during operation

In the Operation state (O5), the ONU maintains its upstream PHY frame clock synchronized with the downstream PHY frame clock and offset by the sum of the ONU response time and the assigned equalization delay specified by the OLT in the Ranging_Time message, as shown in Figure C.13.5. When the ONU receives a bandwidth allocation, it transmits data starting at the upstream word indicated in the StartTime field. During operation, the requisite delay is equal to the assigned equalization delay.

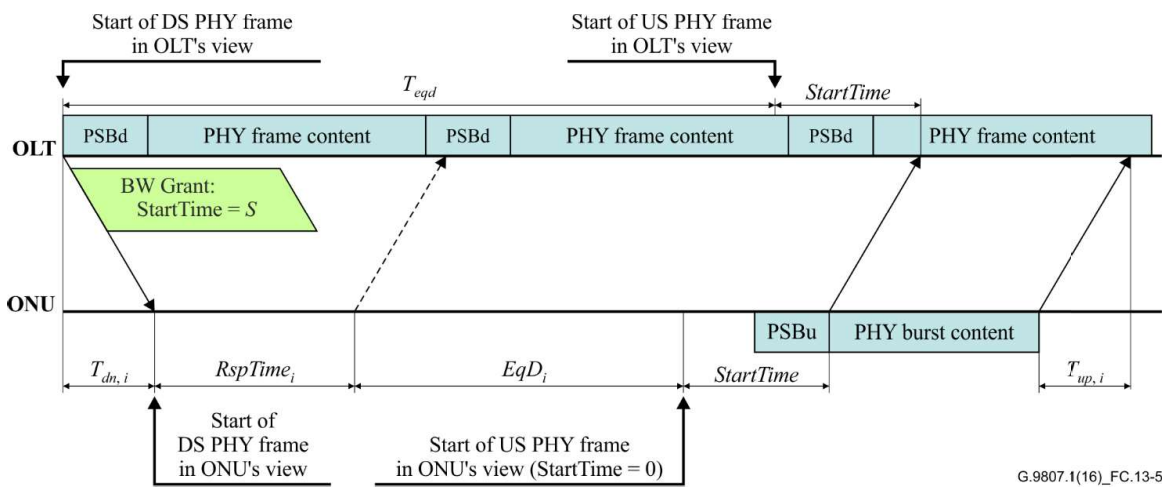

Figure C.13.5 – Timing relationships in the Operation state (O5)

C.13.1.6 In-service equalization delay adjustment

The OLT expects the ONU's upstream transmission to arrive at a fixed time during the upstream PHY frame. The arrival phase of the ONU transmission may drift due to aging, temperature changes and other factors. In those cases, the equalization delay can be recalculated and adjusted from the drift of the upstream transmission. In-service equalization delay adjustment allows small corrections to be made without having to re-range the ONU.

Exhibit 1010
IPR2024-00899, USPN 9,806,892
199 of 290

The change in the equalization delay is equal to the drift time with the opposite sign. If the PHY burst arrives early, the OLT increases the equalization delay by the drift time. If the PHY burst arrives late, the OLT reduces the equalization delay by the drift time. Equalization delay adjustments are communicated to an ONU in the Operation state (O5) using the Ranging_Time PLOAM message. A relative delay parameter can be conveniently used for this purpose.

To avoid excessively frequent equalization delay adjustments and to ensure ONU compliance, the OLT maintains two drift thresholds applicable to all ONUs. The lower threshold establishes the safe bounds within which the transmission drift is considered acceptable and does not require any mitigating action. When the drift exceeds the lower threshold, the OLT calculates a new equalization delay value and transmits it to the ONU using the Ranging_Time PLOAM message. The OLT also recognizes a drift of window (DOWi) event. The upper threshold establishes the critical bounds beyond which the transmission drift can affect the other ONUs on the PON. If the drift exceeds the upper threshold (an event which should not happen as long as the ONU complies with the equalization delay adjustments), the OLT declares transmission interference warning (TIWi) and takes further mitigating actions that may include deactivation or disabling of the offending ONU-ID, or execution of a rogue ONU diagnostic procedure.

The suggested threshold values of DOW_i and TIW_i are invariant in terms of time to the actual upstream transmission line rate, and are expressed in Table C.13.1:

Table C.13.1 – Suggested thresholds for DOW_i and TIW_i

	In integer bit periods for specified line rate		**In time units (approximately)**
	–	**9.95328 Gbit/s**	
DOW_i	–	± 32 bits	± 3.2 ns
TIW_i	–	± 64 bits	± 6.4 ns

C.13.1.7 Quiet window implementation considerations

When in the Serial Number and Ranging states, the ONUs transmit Serial_Number_ONU PLOAM messages and Registration PLOAM messages. Because the OLT does not yet know the equalization delay for these ONUs, it opens a quiet window to prevent collision between the serial number or ranging responses and the regular upstream transmissions by in-service ONUs.

Consider the example shown in Figure C.13.6. Here L_{min} = 0; D_{max} = 20 km; T_{eqd} = 236 µs. This example focuses on serial number acquisition and assumes that the propagation delay is bounded by 100 μs while the ONU response time for different ONUs may vary, unbeknown to the OLT, within the 35 ±1 μs range. Therefore, if the OLT transmits a downstream PHY frame with a specific BWmap at time t_0, coinciding with the start of downstream PHY frame N, the earliest it can schedule the upstream PHY frame implementing this BWmap is 236 μs later. The OLT's objective is to create a 250 μs-long quiet window starting at time $t_0 = t_0 + 236$ μs.

The BWmap supplied with downstream PHY frame N is empty, while the sole allocation structure of the BWmap transmitted with downstream PHY frame $N + 1$ is a serial number grant with StartTime offset of 77 μs. The start of the possible serial number response transmission window is offset by at least 111 μs with respect to the start of the frame carrying the serial number grant, and by at least 236 μs, with respect to frame N.

Exhibit 1010
IPR2024-00899, USPN 9,806,892
200 of 290

Note that PHY frame $N-1$ has to provide the necessary burst mode margin at the end of the BWmap.

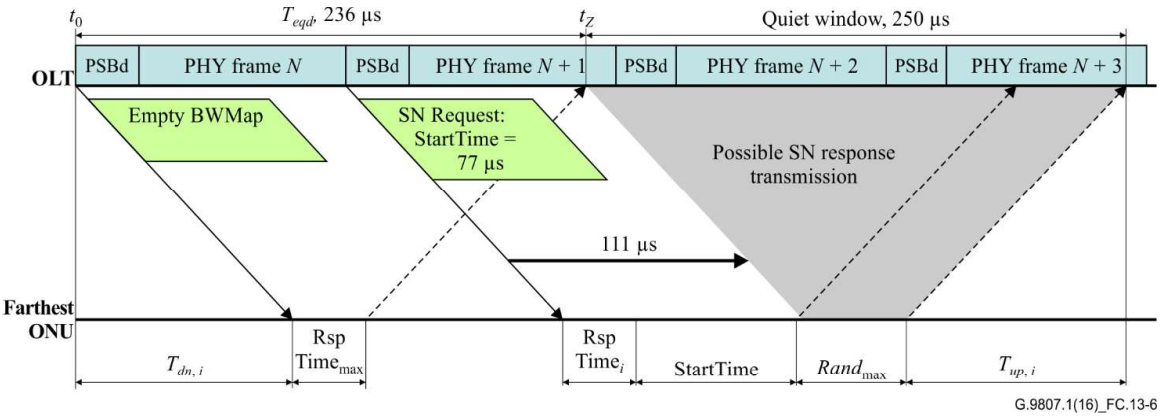

Figure C.13.6 – Quiet window creation

Since each such quiet window affects at least two and possibly three consecutive bandwidth maps, the OLT must ensure that the impact of the quiet windows on the bandwidth and jitter-sensitive traffic flows is minimized. This may be achieved, for example, by re-arranging the BWmaps and providing extra allocations to the affected Alloc-IDs immediately before and/or immediately after the quiet window.

If some information about ONU locations is available to the OLT, it may be able to create a smaller, better targeted and less intrusive quiet window, whose offset with respect to the start of the downstream PHY frame depends on the fibre distance of the closest ONU, and whose size depends on the maximum differential fibre distance.

C.13.1.8 Fibre distance measurement

The OLT can estimate the fibre distance based on the round-trip measurement using $RspTime_i$, the actual response time of ONU_i, which can be obtained via the OMCC. The estimate of the fibre distance between the OLT and the given ONU_i (in meters) may be obtained according to Equation C.13-8:

$$FD_i = (RTT_i - RspTime_i - EqD_i - StartTime \times Q_0) \times 102 \qquad \text{(C.13-8)}$$

Here RTT_i is the round-trip time, i.e., the actual offset of the start of the upstream PHY burst with respect to the start of the downstream PHY frame specifying that burst, in microseconds, as measured by the OLT; $RspTime_i$ is the true ONU response time in microseconds, as reported by ONU_i; EqD_i is the equalization delay of the ONU; *StartTime* is the dynamically generated StartTime value of the burst when the measurement is conducted; Q_0 is the time quantum; and the numeric coefficient of 102 m/µs is a best fit value reflecting the range of refractive indices that [ITU-T G.652] fibres exhibit in the field. This method is capable of producing an estimate that is approximately ±1% accurate.

C.13.2 Time of day distribution

This clause describes the TC layer method that is used to obtain the accurate ToD at a XGS-PON ONU, the timing relations between OLT and ONU, and the timing error analysis. The required accuracy of the ToD clock at the ONU is ±1 μs. Achieving better accuracy of the ONU's ToD clock is a topic of further study.

The principle of operation is as follows. It is assumed that the OLT has an accurate real time clock, obtained through means beyond the scope of this Recommendation. The OLT informs the ONU of

Exhibit 1010
IPR2024-00899, USPN 9,806,892
201 of 290

the time of day when a certain downstream PHY frame would arrive at a hypothetical ONU that had zero equalization delay and zero ONU response time. The certain downstream PHY frame is identified by *N*, the value of its superframe counter, which is an existing feature of the protocol. The information transfer is accomplished using OMCI, and does not need to be in real time. Having learned the ToD arrival time of PHY frame *N*, the ONU can use its equalization delay and response time to compute the ToD associated with the arrival of an arbitrary downstream PHY frame with very high accuracy.

C.13.2.1 Notation

***T*stamp$_N$** – This term refers to the exact ToD at which the first bit of downstream PHY frame *N* arrives at a hypothetical ONU that has an EqD of zero and a response time of zero. The arrival of the signal at the ONU is defined to be the instant at which the optical signal crosses the optical connector or splice that is the boundary between the ODN and the ONU.

***T*send$_N$** – The exact ToD at which the first bit of downstream PHY frame *N* departs from the OLT. The departure of the signal is defined to be the instant at which the optical signal crosses the optical connector or splice that is the boundary between the OLT and the ODN.

***T*recv$_{N,\,i}$** – The exact ToD at which the first bit of downstream frame PHY *N* arrives at ONU$_i$. The arrival of the signal at the ONU is defined to be the instant at which the optical signal crosses the optical connector or splice that is the boundary between the ODN and the ONU.

***RspTime*$_i$** – The value of the response time for ONU$_i$, which lies in the range of 34 to 36 microseconds.

***T*$_{\mathbf{eqd}}$** – The offset of the upstream PHY frame with respect to the downstream PHY frame at the OLT location. The OLT adjusts the equalization delay of each ONU such that, for all ONUs, the start of the upstream frame at the OLT occurs T_{eqd} seconds after the start of the downstream frame.

– ***n***$_{\text{up}}$ – The group velocity refractive index for the specific upstream wavelength.

– ***n***$_{\text{dn}}$ – The group velocity refractive index for the specific downstream wavelength.

Figure C.13.7 illustrates time of day calculations.

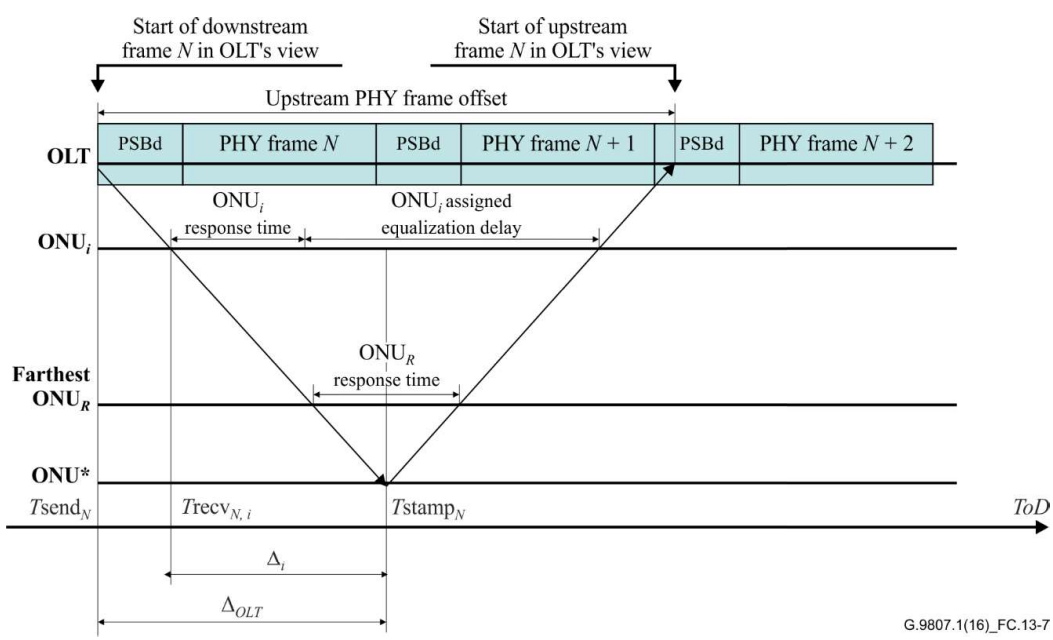

Figure C.13.7 – Time of day calculations

Exhibit 1010
IPR2024-00899, USPN 9,806,892
202 of 290

C.13.2.2 ONU clock synchronization process

The following process synchronizes the slave clock of the ONU to the master clock of the OLT:

- The OLT selects a downstream PHY frame to be used as the timing reference. This PHY frame is identified by superframe counter N and has an associated $T\text{send}_N$ value. It is recommended that the selected PHY frame be within a ten-second window of the current time.
- The OLT calculates the $T\text{stamp}_N$ value, which is based on the $T\text{send}_N$ value of PHY frame N. This calculation is given by Equations C.13-9 and C.13-10:

$$Tstamp_N = Tsend_N + \Delta_{OLT} \tag{C13-9}$$

where:

$$\Delta_{OLT} = Teqd \frac{n_{\text{dn}}}{n_{up} + n_{dn}} \tag{C.13-10}$$

Note that the TsendN and TstampN values are all referenced to the optical interface to ensure that they are invariant to the implementation. The OLT is responsible for compensating for all its internal delays.

- This value pair (N, $T\text{stamp}_N$) is stored locally at the OLT side.
- The OLT sends this value pair (N, $T\text{stamp}_N$) to one or more ONUs using OMCI.
- ONU_i calculates the $T\text{recv}_{N,i}$ value based on the $T\text{stamp}_N$ and its own timing parameters. This calculation is given by Equations C.13-11 and C.13-12:

$$Trecv_{N,i} = Tstamp_N - \Delta_i \tag{C.13-11}$$

where:

$$\Delta_i = \left(EqD_i + RspTime_i\right) \frac{n_{dn}}{n_{up} + n_{dn}} \tag{C.13-12}$$

The exact value of response time for ONU_i must be used. Note that the $T\text{stamp}_N$ and $T\text{recv}_N$ values are all referenced to the ONU's optical interface to ensure that they are invariant to the implementation. The ONU is responsible for compensating for all of its internal delays.

- When ONU_i receives an arbitrary downstream frame K, it can set its ToD clock to the value $T\text{recv}_{K,i} = T\text{recv}_{N,i} + (K - N) \times 125.0\ \mu\text{s}$. Care should be taken to account for the superframe counter rolling over. The ONU is expected to complete clock synchronization within 10 s of communication of the (N, $T\text{stamp}_N$) value pair using OMCI.
- Whenever the ONU's equalization delay is adjusted while the setting of the ToD clock is still pending, the ONU makes the commensurate adjustment in its predicted $T\text{recv}_{N,i}$ value. In this way, the ToD clock tracks any drifts in propagation delay of the PON system.

It is assumed (and holds true for a common XGS-PON system) that the OLT supports one and only one ToD clock domain. If this is the case, then the XGS-PON system clock can be synchronized to the ToD clock, thus allowing the periodicity of the ToD distribution procedure to be relaxed. The case of multiple ToD clock domains per OLT is out of scope.

C.13.2.3 Performance analysis

This clause does not impose any new system requirements. The analysis contained herein is based on the requirements formulated elsewhere in this Recommendation.

Exhibit 1010
IPR2024-00899, USPN 9,806,892
203 of 290

C.13.2.3.1 Equalization delay accuracy

The accuracy of equalization delay is determined by the DOW threshold (see clause C.13.1.6), which is approximately ±3 ns. This is very much smaller than the overall system timing requirement of 1 μs, so this can likely be neglected.

C.13.2.3.2 Fibre propagation delay

For typical [ITU-T G.652] fibres, when operating with Basic wavelength set, the maximum estimate of the index correction factor is thus:

$$\frac{n_{1577}}{n_{1270} + n_{1577}} = 0.500153$$

Using the approximate value of 0.5 for this constant would result in a maximum systematic error of 306 ppm, which over a 200 μs PON is an error of 61.2 ns.

For typical [ITU-T G.652] fibres, and when operating with Optional wavelength set, the maximum estimate of the index correction factor is thus:

$$\frac{n_{1490}}{n_{1310} + n_{1490}} = 0.500085$$

Then using the approximate value of 0.5 for this constant would result in a maximum systematic error of 170 ppm, which over a 200 μs PON is an error of 34 ns.

It should be noted that different fibres may exhibit different absolute refractive indices; however, the relative dispersion between upstream wavelength and downstream wavelength is very well controlled. See Appendix C.II for the details of the error analysis.

C.13.2.3.3 Internal timing corrections

Both the OLT and ONU are responsible for compensating for their internal delays from wherever the logical computations and/or event triggers occur to the optical interfaces, which are used as reference points for standardization purposes. In the PON system, the TDMA requirements imply that these internal delays are stable at least over each ranging life-cycle to the accuracy given above (±8 bits at 2.5 Gbit/s). The stability and predictability of PON equipment over longer time periods is not specified. However, one can expect the cycle-to-cycle variability to be contained within the bounds of ±64 bits at 10 Gbit/s, which corresponds to two uncontrolled serializer-deserializer delays in the downstream link. Even in this case, the resulting timing uncertainty of ±6.4 ns is very small.

C.13.3 PtP WDM ONU transmission timing

Not applicable to XGS-PON.

C.14 XGS-PON performance monitoring, supervision and defects

This clause focuses on mechanisms to detect link failure and monitor the health and performance of links. It does not cover functions that may utilize the performance monitoring information, such as station management, bandwidth allocation or provisioning.

C.14.1 Performance monitoring

To facilitate troubleshooting, it is desirable that OLTs and ONUs maintain a variety of performance monitoring (PM) counters. The collected counter values may trigger actions ranging from threshold crossing alerts to alarms to protection switching, which are largely beyond the scope of this Recommendation.

Exhibit 1010
IPR2024-00899, USPN 9,806,892
204 of 290

This clause identifies mandatory and optional PM parameters, and for the PM parameters collected at the OLT, it indicates whether they should be collected individually for each ONU or on an aggregate basis for all ONUs.

Monitoring of optical parameters, for example, transmitted and received optical power, is specified in [ITU-T G.988].

Counters collected at the ONU are available to the OLT using OMCI. Performance monitoring parameters are listed in Table C.14.1.

Table C.14.1 – Performance monitoring parameters

Parameter	Mandatory or optional	Description	Collected by:			Notes
			Each ONU	OLT for each ONU$_i$	OLT	
PHY PM						
Corrected FEC bytes	M	The number of bytes that were corrected by the FEC function.	Yes, for all traffic flows.	Yes, if upstream FEC is enabled for ONU$_i$	N/A	
Corrected FEC codewords	M	Count of FEC codewords that contained errors but were corrected by the FEC function.	Yes, for all traffic flows.	Yes, if upstream FEC is enabled for ONU$_i$.	N/A	
Uncorrectable FEC codewords	M	Count of FEC codewords that contained errors and could not be corrected by the FEC function.	Yes, for all traffic flows.	Yes, if upstream FEC is enabled for ONU$_i$.	Yes	
Total FEC codewords	M	Count of total received FEC codewords.	Yes, for all traffic flows.	Yes, if upstream FEC is enabled for ONU$_i$.	Yes	
Total received words protected by BIP-32	M	Count of received 4-byte words that are included in BIP-32 check.	No	Yes	Yes	
BIP-32 error count	M	Count of bit errors according to BIP-32 (Note 1).	No	Yes	Yes	
PSBd HEC error count	O	HEC error in any of the fields of PSBd.	Yes, for all traffic flows.	N/A	N/A	
FS HEC error count	O	DS FS header HEC errors received.	Yes, for all traffic flows.	Yes	N/A	
Unknown profile count	O	ONU could not transmit because the specified burst profile was not known.	Yes	N/A	N/A	

Exhibit 1010
IPR2024-00899, USPN 9,806,892
205 of 290

Table C.14.1 – Performance monitoring parameters

Parameter	Mandatory or optional	Description	Collected by:			Notes
			Each ONU	OLT for each ONU_i	OLT	
LODS PM						
Total number of LODS events	M	Counter of state transitions from O5.1to O6	Yes	N/A	N/A	ONU local event
LODS events restored	M	LODS cleared	Yes	N/A	N/A	ONU local event
LODS events resulting in ONU reactivation without synchronization being reacquired	M	TO2 expires before the downstream is reacquired.	Yes	N/A	N/A	ONU local event
XGEM PM						
Transmitted XGEM frames	M	Total number of XGEM frames transmitted.	Yes	No	Yes	
Transmitted XGEM frames per XGEM port	O	The number of XGEM frames transmitted.	Yes, per XGEM port.	No	Yes, per XGEM port.	
Received XGEM frames	M	Total number of XGEM frames received.	No	No	Yes	
Received XGEM frames per XGEM port	O	The number of XGEM frames received.	Yes, per XGEM port that belongs to the ONU.	No	Yes, per XGEM port.	
Count of the number of transmitted XGEM frames with LF bit NOT set	O	Number of transmit fragmentation operations.	Yes	No	Yes	
Count of XGEM frame header HEC errors	M	Number of events involving loss of XGEM channel delineation.	Yes	Yes	No	
Count of FS frame words lost due to XGEM frame HEC error.	O	Aggregate severity measure of the loss of XGEM channel delineation events. Note that the number of lost XGEM frames is not available.	Yes	Yes	N/A	

Exhibit 1010
IPR2024-00899, USPN 9,806,892
206 of 290

Table C.14.1 – Performance monitoring parameters

Parameter	Mandatory or optional	Description	Collected by:			Notes
			Each ONU	OLT for each ONU$_i$	OLT	
XGEM key error count	M	XGEM frames discarded because of unknown or invalid encryption key. Examples include: no unicast or broadcast key established for specified key index, key index indicating encrypted XGEM frame on a XGEM port that is not provisioned for encryption, key index indicating upstream encryption on a XGEM port that is provisioned for downstream encryption only, or invalid key index (11). This count is included in the Rx XGEM frame count.	Yes	Yes	N/A	
UTILIZATION PM						
Transmitted bytes in non-idle XGEM frames	M	Measure of downstream utilization	Yes	Yes	Yes	
Received bytes in non-idle XGEM frames	M	Measure of upstream utilization	Yes	Yes	Yes	
Count of DBA inability to assign guaranteed bandwidth in the presence of demand	O	Indication of Upstream congestion	N/A	Yes	Yes	
PLOAM PM						
SN grant count	O	Serial number grants for ONU discovery.	N/A	N/A	Yes	
PLOAM MIC errors	O	Counter of received PLOAM messages with MIC errors	Yes	Yes	N/A	
PLOAM timeouts	O	Retransmission count: missing, late or errored response. No response to key request or Request_Registration, lack of ACK, etc.	N/A	N/A	Yes	
DG count	O	Count of dying gasp bursts received.	N/A	Yes	N/A	
Downstream PLOAM message count	O	Count of PLOAM messages sent by OLT, received by ONU, either broadcast or directed to the specific ONU-ID.	Yes	Yes	Yes (broad-cast)	
Burst_Profile message count	O	Count of PLOAM messages sent by OLT	Yes	N/A	Yes	

Exhibit 1010
IPR2024-00899, USPN 9,806,892
207 of 290

Table C.14.1 – Performance monitoring parameters

Parameter	Mandatory or optional	Description	Collected by:			Notes
			Each ONU	OLT for each ONU_i	OLT	
Assign_ONU-ID message count	O	Count of PLOAM messages sent by OLT	Yes	N/A	Yes	
Ranging_Time message count	M	Count of PLOAM messages sent by OLT	Yes	Yes	Yes	Mandatory as it provides a base for transmiss-ion time drift estimation
Deactivate_ONU-ID message count	O	Count of PLOAM messages sent by OLT	Yes	N/A	Yes	
Disable _Serial_Number message count	O	Count of PLOAM messages sent by OLT	Yes	N/A	Yes	
Request_Registration message count	O	Count of PLOAM messages sent by OLT	Yes	Yes	N/A	
Assign_Alloc-ID message count	O	Count of PLOAM messages sent by OLT	Yes	Yes	N/A	
Key_Control message count	O	Count of PLOAM messages sent by OLT	Yes	Yes	Yes	
Sleep_Allow message count	O	Count of PLOAM messages sent by OLT	Yes	Yes	Yes	
Upstream PLOAM message count	O	Count of messages (other than Acknowledgement) sent by ONU, received by OLT.	Yes	Yes	Yes	
Serial_Number_ONU message count	O	Count of PLOAM messages sent by ONU	Yes	Yes (Note 2)	Yes	
Registration message count	O	Count of PLOAM messages sent by ONU	Yes	Yes	N/A	
Key_Report message count	O	Count of PLOAM messages sent by ONU	Yes	Yes	N/A	
Acknowledgement message count	O	Count of PLOAM messages sent by ONU	Yes	Yes	N/A	
Sleep_Request message count	O	Count of PLOAM messages sent by ONU	Yes	Yes	N/A	
Activation PM						
Non-discernible activation attempts	O	Quiet window bursts from which the OLT is unable obtain the sender's SN.	N/A	N/A	Yes	
Foreign activation attempts	O	Unrecognized SN	N/A	N/A	Yes	

Exhibit 1010
IPR2024-00899, USPN 9,806,892
208 of 290

Table C.14.1 – Performance monitoring parameters

Parameter	Mandatory or optional	Description	Collected by:			Notes
			Each ONU	OLT for each ONU$_i$	OLT	
Successful new activations	O	ONU requires ONU-ID assignment and ranging.	N/A	Yes	Yes	
OMCI PM						
OMCI baseline message count	O	OMCI message count	Yes, messages directed to the given ONU.	Yes	N/A	
OMCI extended message count	O	OMCI message count	Yes, messages directed to the given ONU.	Yes	N/A	
Autonomous messages	O	OMCI message count	No	Yes	No	
OMCI MIC errors	O	Count of received OMCI messages with MIC errors	Yes	Yes	N/A	
Power monitoring						
Transmit Optical power level	M	Depending on the presence of RE, the maintained value refers to S/R, or S'/R'.	N/A	N/A	Yes	
Energy conservation						
Time spent in each of the OLT /ONU low-power states, respectively	O	Time spent in each of the OLT/ONU low-power states, respectively.	Yes	Yes	N/A	
NOTE 1 – The BIP-32 error count is used to obtain a BER estimate only when FEC is off. NOTE 2 – The OLT assigns the ONU-ID and updates the per-ONU count only after recognizing the ONU's serial number.						

C.14.2 Defects

This clause captures the required actions that are performed in the TC layer, as opposed to those left to the discretion of an implementer. In particular, the effects of repeated defects of the same type are an implementation matter.

C.14.2.1 Items detected at OLT

Table C.14.2 provides list and type of defects detected at the OLT.

Exhibit 1010
IPR2024-00899, USPN 9,806,892
209 of 290

Table C.14.2 – Defects detected at OLT

Type		Description			
		Detection conditions	**Actions**	**Cancellation conditions**	**Actions**
LOBi	Loss of burst for ONU_i	Failure to delineate, for any reason, the specified number, $Clob_i$, of consecutive scheduled bursts from ONU_i when not exempt by power management state machine. (Replaces conditions previously known as LOSi and LOFi.) The $Clob_i$ threshold is configurable. Under normal conditions, it defaults to four missing consecutive bursts; however, under certain circumstances (such as power saving purposes), this threshold should be kept as a specific counter and set by the OLT to the ONU as according to actual number of tolerated missing bursts.	At the discretion of the OLT; may include waiting extra soak time; changing the allocation schedule; deactivating or disabling the offending ONU, or executing a rogue ONU diagnostic procedure. Reporting of the LOBi condition should be qualified by any DG received.	A scheduled burst from ONU_i successfully received.	
LOS	Loss of signal	The OLT did not receive any expected transmissions in the upstream (complete PON failure) for four consecutive frames.	At the discretion of the OLT; may require additional diagnostic to determine whether PON has been lost, and ultimately lead to protection switching event.	When the OLT receives at least one upstream transmission.	–
TIW	Transmission interference warning for ONU *i*	The ONU transmission drift exceeds the outer (TIW) threshold, and remains outside the threshold after three consecutive attempts to correct it with a Ranging_Time PLOAM message.	At the OLT discretion; may include deactivating or disabling the ONU, or executing a rogue ONU diagnostic procedure.	The ONU transmission drift does not exceed the lower (DOW) threshold.	
SUFi	Start-up failure of ONU_i.	The ranging of ONU_i has failed. The OLT detects the ONU's serial number, but the ONU fails to complete the bring-up sequence.	Send Deactivate_ONU-ID PLOAM message.	The ONU is ranged successfully.	

Exhibit 1010
IPR2024-00899, USPN 9,806,892
210 of 290

Table C.14.2 – Defects detected at OLT

Type		Description			
		Detection conditions	**Actions**	**Cancellation conditions**	**Actions**
DFi	Disable failure of ONU_i.	The ONU continues to respond to the upstream allocations after an attempt to disable the ONU using its serial number (with one or more Disable_Serial_Number PLOAM messages) which may have been preceded by a failed attempt to deactivate the ONU (with one or more Dectivate_ONU PLOAM messages). Note that the OLT can detect this condition only if it continues to provide upstream bandwidth allocations to the ONU.	Mitigating action at the OLT discretion. May include rogue ONU diagnostic procedures. The offending ONU-ID and the associated Alloc-IDs may have to be blocked from re-allocation.	The offending ONU is successfully re-activated and remains positively controlled, or is prevented from transmitting upstream.	
LOPCi	Loss of PLOAM channel with ONU_i.	Generic defect indicating breakage of the PLOAM protocol: persistent MIC failure in the upstream; lack of acknowledgements or proper PLOAM responses from the ONU. Persistent means that the same irregular condition is observed consecutively at least three times.	Mitigating action at the OLT discretion; may include ONU re-authentication, ONU deactivation or disabling, or execution of rogue ONU diagnostic procedures.		–
LOOCi	Loss of OMCC channel with ONU_i	Recognized by the OLT's OMCI processing engine (based on the persistent MIC failure in the upstream).	Mitigating action at the OLT discretion; may include ONU re-authentication, ONU deactivation or disabling, or execution of rogue ONU diagnostic procedures.		

C.14.2.2 Items detected at ONU

Table C.14.3 provides list of defects detected at the ONU.

Exhibit 1010
IPR2024-00899, USPN 9,806,892
211 of 290

Table C.14.3 – Defects detected at ONU

Type		Description			
		Detection conditions	**Actions**	**Cancellation conditions**	**Actions**
LODS	Loss of downstream synchro-nization.	The ONU downstream synchronization state machine in the Hunt or Pre-Sync states. (See clause C.10.1.1.3.)	Provide necessary visual indication and user-side interface signalling. Execute appropriate transition of the ONU activation state machine.	The ONU downstream synchronization state machine in the Sync or Re-Sync states.	Execute appropriate transition of the ONU activation state machine.

C.14.2.3 Urgent ONU status snapshot record

To facilitate post-mortem diagnostics, the ONU supports recording a snapshot of relevant ONU status information, defects and failure conditions. The information is collected and stored by the ONU when communication channel with the OLT is compromised or unavailable.

The urgent status snapshot record is made as a part of the dying gasp sequence, and any time the transmitter is being switched off by the ONU software. It can be retrieved either remotely on site or in the lab upon ONU replacement. The urgent status snapshot record is stored in non-volatile memory to ensure it survives ONU reactivation, warm and cold reboot, power cycle and power loss.

The storage is expected to accommodate at least ten urgent status snapshot records and to be reasonably protected against accidental erasure and unauthorized access.

C.15 XGS-PON security

This clause discusses threat models characteristic for the XGS-PON operating environment, and specifies authentication, data integrity and privacy protection aspects of the system.

C.15.1 Threat model

XGS-PON security is intended to protect against the following threats:

- Since downstream data is broadcast to all ONUs attached to the OLT, a malicious user capable of replacing or re-programming an ONU would be capable of receiving all downstream data intended for all connected users.
- Since upstream data received by the OLT can originate from any ONU attached to the XGS-PON optical distribution network (ODN), a malicious user capable of replacing or re-programming an ONU could forge packets so as to impersonate a different ONU (i.e., theft of service).
- An attacker could connect a malicious device at various points on the infrastructure (e.g., by tampering with street cabinets, spare ports or fibre cables). Such a device could intercept and/or generate traffic. Depending on the location of such a device, it could impersonate an OLT or alternatively it could impersonate an ONU.
- A malicious user in any of the above scenarios could record packets transmitted on the PON and replay them back onto the PON later, or conduct bit-flipping attacks.

PONs are deployed in a wide variety of scenarios. In some cases, the ODN, the optical splitter, or even the ONUs may be installed in a manner considered to be physically secure or tamper-proof.

To accommodate these scenarios in an economical manner, activation of some of the XGS-PON security features is optional, as indicated in the clauses below.

Exhibit 1010
IPR2024-00899, USPN 9,806,892
212 of 290

C.15.2 Authentication

The XGS-PON system supports three mechanisms for authentication. The first mechanism is based on the use of Registration_ID. It is executed in the course of ONU activation and may be repeated throughout the duration of the activation cycle, i.e., until the ONU's next entry into the Initial state (O1). The registration-based authentication mechanism provides a basic level of authentication of the ONU to the OLT. It does not provide authentication of the OLT to the ONU. Support of the registration-based authentication mechanism is mandatory in all XGS-PON devices. The two other authentication mechanisms provide secure mutual authentication to both the OLT and the ONU. One of them is based on an ONU management and control interface (OMCI) message exchange (see Annex C.C). The other is based on an IEEE 802.1X message exchange and provides a wide range of extensible features (see Annex C.D). Support for OMCI-based and IEEE 802.1X-based authentication mechanisms is mandatory for implementation at the component level, but optional from an equipment specification perspective. In other words, the transmission convergence (TC) layer implementation will have the capability to support both secure mutual authentication methods, but equipment constructed using these TC-layer implementations may choose not to support them.

It is within the discretion of an operator to require support of one or both secure mutual authentication mechanisms at the equipment specification stage, and to employ any or none of the authentication methods, including the basic registration-based authentication, when the system is in service.

Upon authentication failure, the OLT may undertake measures to restore functionality and to prevent a potential security breach, which may include repeating authentication using the same or an alternative mechanism, blocking upstream and downstream traffic, deactivating or disabling the offending ONU or executing the rogue ONU diagnostic procedures.

C.15.2.1 Registration-based authentication

The registration-based authentication mechanism can provide authentication of ONU to OLT, but not vice versa. Its support is mandatory for all XGS-PON systems. To maintain full functionality, this method requires:

- that a Registration_ID be assigned to a subscriber at the management level;
- that the Registration_ID be provisioned into the OLT and be communicated to the field personnel or to the subscriber directly;
- that the ONU support a method for entering the Registration_ID in the field (specification of such a method being beyond the scope of this Recommendation);
- that the field personnel or the subscriber in fact enter the Registration_ID into the ONU.

The Registration_ID is stored at the ONU in a non-volatile storage. It is retained through the ONU re-activation and power cycle, until explicitly reset by the field personnel or the subscriber.

C.15.2.1.1 The OLT perspective

The OLT must support ONU authentication based on the reported Registration_ID (details of this procedure are operator-specific), as well as to execute the MSK and derived shared key calculation procedure based on the reported Registration_ID (see clause C.15.3).

The OLT requests the Registration_ID from the ONU in the following situations:

- In the course of ONU activation, by issuing a ranging grant.
- As a final handshake upon completion of a secure mutual authentication procedure, by sending a Request_Registration message to the ONU.
- At any time throughout the ONU's activation cycle at its own discretion, by sending a Request_Registration message to the ONU.

Exhibit 1010
IPR2024-00899, USPN 9,806,892
213 of 290

If at the time of Registration_ID receipt from the ONU, there is no valid secure mutual association (SMA) between the OLT and the ONU (i.e., in the course of ONU activation, or if secure mutual authentication has not been executed or has failed), the OLT:

– must compute the master session key (MSK) and derived shared keys based on the reported Registration_ID;
– may perform authentication of the ONU based on the reported Registration_ID.

It is up to the operator to specify whether registration-based authentication is performed and how the result is used. Failure of registration-based authentication shall not prevent the OLT from issuing an equalization delay to the ONU (i.e., the ONU is nevertheless allowed to enter the Operation state (O5)) or from maintaining management level communication with the ONU, but may have an effect on how the OLT further handles the ONU and, in particular, on subsequent provisioning of services.

Registration-based authentication is not performed and the registration-based MSK and derived shared keys are not calculated, if at the time of the Registration_ID report there exists a valid SMA between the OLT and the ONU.

Once the OLT transmits a Request_Registration message to the ONU while expecting to use the reported Registration_ID for shared key derivation, it refrains from sending to that ONU other PLOAM or OMCI messages with ONU-specific MIC (see clauses C.15.3.2 and C.15.3.3) until after the Registration_ID is received and the registration-based MSK and derived shared keys are calculated.

Once the OLT completes calculation of the registration-based MSK and derived shared keys for a particular ONU, it immediately commits those keys as active.

At the start of the ONU's activation cycle, the OLT discards any active registration-based MSK and derived shared keys.

C.15.2.1.2 The ONU perspective

The ONU must be able to perform calculation of the MSK and derived share keys based on the Registration_ID.

The ONU computes the registration-based MSK and derived shared keys upon power up (initially, using the well-known default Registration_ID (see clause C.11.3.4.2)), and each time the Registration_ID changes. The computed values are stored for future use. As the registration-based key set may be required at any time, the ONU may benefit by storing the registration-based MSK and derived shared keys separately from the MSK and derived shared keys based on secure mutual authentication.

ONU reports Registration_ID to the OLT in the following situations:

– In the course of ONU activation, in response to a ranging grant.
– At any time during the ONU's activation cycle, in response to a Request_Registration message.

The events that cause registration-based key re-computation are asynchronous to the physical layer operations, administration and maintenance (PLOAM) channel events. The ONU is expected to have the registration-based MSK and derived shared keys available at the time it reports its Registration_ID to the OLT.

If there is no valid SMA between the OLT and the ONU, the ONU commits the set of shared keys based the reported Registration_ID immediately upon sending the Registration PLOAM message.

The ONU retains the Registration_ID and the stored registration-based MSK and derived shared keys between activation cycles and between power cycles.

Exhibit 1010
IPR2024-00899, USPN 9,806,892
214 of 290

C.15.2.2 Secure mutual authentication options

Two secure mutual authentication mechanisms are defined: OMCI-based authentication (Annex C.C) and IEEE 802.1X-based authentication (Annex C.D). These mechanisms authenticate the OLT to the ONU as well as the ONU to the OLT. The support of both secure mutual authentication mechanisms is optional on the system level.

If secure mutual authentication is supported by the system and is employed by the operator, the OLT initiates the secure mutual authentication procedure using an appropriate mechanism upon completion of the ONU activation procedure before user data traffic is transmitted, and subsequently may initiate re-authentication at any time, subject to the operator's policies and discretion.

In the course of execution of a secure mutual authentication procedure, the OLT and the ONU compute the secure master session key (MSK) and a set of secure shared keys applicable for specific management and operation tasks.

Both the OLT and the ONU discard the MSK and derived shared keys obtained in the course of secure mutual authentication at the start of the ONU's activation cycle along with the other TC layer parameters.

C.15.3 Key derivation

The mathematical details of the MSK and derived shared key calculation are shared by the OLT and the ONU.

The ONU computes the registration-based MSK and derived shared keys upon power up (initially using the well-known default Registration_ID (see clause C.11.3.4.2), and each time the Registration_ID changes.

The OLT computes the registration-based MSK and derived shared keys under the following conditions:

- Each time the ONU reports its Registration_ID to the OLT in response to a ranging grant in the course of ONU activation, regardless of whether or not the reported Registration_ID is used for authentication, and what the outcome of the registration-based authentication procedure is.
- Each time the ONU reports its Registration_ID to the OLT in response to the Request_Registration PLOAM message, but only when there is no valid mutual security association between OLT and ONU.

Both the OLT and the ONU compute the secure MSK and derived shared keys each time a secure mutual authentication procedure using either the OMCI-based or the IEEE 802.1X-based mechanism is executed.

C.15.3.1 Cryptographic method

The secure key derivation procedure employs the cipher-based message authentication code (CMAC) algorithm specified in [NIST SP800-38B] with the advanced encryption standard (AES) encryption algorithm [NIST FIPS-197] as the underlying block cipher.

The AES-CMAC function takes as its inputs:

– block cipher key K;
– the information message M; and
– the bit length of the output $Tlen$,

and produces the message authentication code T of length $Tlen$ as an output. The notation for invocation of the AES-CMAC function is expressed in C.15-1:

$$T = \text{AES-CMAC}\ (K, M, Tlen) \qquad \text{(C.15-1)}$$

Exhibit 1010
IPR2024-00899, USPN 9,806,892
215 of 290

For the purposes of this Recommendation, the block size of the underlying block cipher and the bit length of the AES key are 128 bits. This version of the block cipher is referred to herein as AES-128.

C.15.3.2 Master session key

The master session key (MSK) is a 128-bit value that is shared between the OLT and the given ONU as a result of an authentication procedure and which serves as a starting point for the derivation of all of the other secret keys used in subsequent secure communications.

For the registration-based key derivation, the MSK is obtained from the ONU Registration_ID (see C.15-2):

$$\text{MSK} = \text{AES-CMAC}\ ((0x55)_{16}, \text{Registration_ID}, 128) \qquad \text{(C.15-2)}$$

Here $(0x55)_{16}$ denotes a default key composed of the hex pattern 0x55 repeated 16 times, and Registration_ID is the 36-byte value transmitted in the Registration PLOAM message. Note that the Registration PLOAM message may carry either an ONU-specific Registration_ID, or a well-known default value.

When the key derivation is triggered by the success of secure mutual authentication, the procedure to obtain the MSK depends on the specific authentication mechanism.

C.15.3.3 Derived shared keys

The session key (SK) binds the MSK to the context of the security association between the OLT and the ONU. The SK, which is used for subsequent key derivations, is obtained using the formula shown in C.15-3:

$$\text{SK} = \text{AES-CMAC}\ (\text{MSK}, (\text{SN} \mid \text{PON-TAG} \mid 0x53657373696f6e4b), 128) \qquad \text{(C.15-3)}$$

where the information message, which is 24 bytes long, is a concatenation of three elements: the ONU serial number (SN) as reported in octets 5 to 12 of the upstream Serial_Number_ONU PLOAM message (clause C.11.3.4.1), the PON-TAG as reported in octets 26 to 33 of the downstream Burst_Profile PLOAM message (clause C.11.3.3.1) and the hexadecimal representation of the ASCII string "SessionK".

The OMCI integrity key (OMCI_IK) is used to generate and verify the integrity of OMCI messages. The OMCI_IK is derived from the SK by the formula shown in C.15-4:

$$\text{OMCI_IK} = \text{AES-CMAC}\ (\text{SK}, 0x4f4d4349496e746567726974794b6579, 128) \qquad \text{(C.15-4)}$$

Here the information message parameter of the AES-CMAC function is 128 bits long, and is the hexadecimal representation of the ASCII string "OMCIIntegrityKey".

The PLOAM integrity key (PLOAM_IK) is used to generate and verify the integrity of FS layer unicast PLOAM messages. The PLOAM_IK is derived from the SK by formula C.15-5:

$$\text{PLOAM_IK} = \text{AES-CMAC}\ (\text{SK}, 0x504c4f414d496e7465677274794b6579, 128) \qquad \text{(C.15-5)}$$

Here the information message parameter of the AES-CMAC function is 128 bits long, and is the hexadecimal representation of the ASCII string "PLOAMIntegrtyKey". Note that "PLOAMIntegrtyKey" (mis-)spelling is deliberate to facilitate 128 bit hexadecimal representation in formula C.15-5.

For downstream broadcast PLOAM messages and for unicast PLOAM messages exchanged in the course of ONU activation prior to availability of the registration-based MSK, the default PLOAM_IK value is used, which is equal to $(0x55)_{16}$, the subscript indicating the multiplicity of repetition of the specified hex pattern.

The key encryption key (KEK) is used to encrypt/decrypt and protect/verify the integrity of the data encryption key that is carried in the PLOAM channel. The KEK is derived from the SK by formula C.15-6:

Exhibit 1010
IPR2024-00899, USPN 9,806,892
216 of 290

$$KEK = AES\text{-}CMAC\ (SK,\ 0x4b6579456e6372797074696f6e4b6579,\ 128) \qquad (C.15\text{-}6)$$

Here the information message parameter of the AES-CMAC function is 128 bits long, and is the hexadecimal representation of the ASCII string "KeyEncryptionKey".

An ONU re-derives the SK, the OMCI_IK, the PLOAM_IK and the KEK when the PON-TAG in the downstream Burst_Profile PLOAM message changes. The PON-TAG may change in the course of burst profile update.

C.15.4 XGEM payload encryption system

XGEM payloads can be encrypted for transmission to provide data privacy in the presence of a potential eavesdropping threat.

C.15.4.1 Cryptographic method

The algorithm used for XGEM payload encryption is the AES-128 [NIST FIPS-197] cipher, used in counter mode (AES-CTR), as described in [NIST SP800-38A]. The AES-CTR algorithm applies a forward cipher with a secret key known only to the OLT and ONU (or ONUs – in the case of a broadcast key) to a sequence of input counter blocks to produce a sequence of output blocks that are exclusive-OR-ed with the plaintext XGEM payload. The sequence of counter blocks is initialized for each XGEM frame payload field to a value called "initial counter block" and is incremented using a standard incrementing function applied to the entire counter block (see clause B.1 of [NIST SP800-38A]). To decrypt the ciphertext, for each XGEM frame, the forward cipher with the same secret key is applied to a sequence of input counter blocks initialized to the same initial counter block value. The output blocks are exclusive-OR-ed with the blocks of ciphertext XGEM payload to restore the plaintext XGEM payload.

C.15.4.2 Secret key selection

XGEM payload encryption may apply to any unicast transmission in the downstream and upstream directions, and to one specified multicast service stream for downstream broadcast transmission. The OLT ensures that, at all times, there is a PON-wide broadcast key pair which is used for broadcast XGEM Port-ID or Port-IDs, and that there is a unicast key pair for each ONU which is used for all XGEM Port-IDs that belong to that ONU. See clause C.15.5 for the key exchange and activation mechanism that, at all times, allows to select a valid key for each supported key pair.

The key pair to be used for XGEM payload encryption depends on the XGEM Port-ID. Given the XGEM Port-ID (unicast or broadcast), the sender selects the specific key of the appropriate key pair, according to the rules of clause C.15.5, and provides an indication of the selected key in the XGEM header.

Each XGEM frame header, as defined in clause C.9.1.2, contains a 2-bit field designated as the key index, carrying an indication whether or not the particular XGEM frame payload is encrypted and if so, which of the encryption keys was used. The following code points are defined for the key index field:

- 00 – XGEM frame payload is unencrypted;
- 01 – XGEM frame payload is encrypted using the first encryption key;
- 10 – XGEM frame payload is encrypted using the second encryption key;
- 11 – Reserved.

C.15.4.3 Initial counter block

The 128-bit initial counter block value for a particular XGEM frame is determined by the values of superframe counter (SFC) and intra-frame counter (IFC) associated with the given XGEM frame.

In the downstream direction, the SFC value is contained in the PSBd field of the PHY frame in which the given downstream XGEM frame is transmitted. In the upstream direction, the SFC value is

Exhibit 1010
IPR2024-00899, USPN 9,806,892
217 of 290

contained in the PSBd field of the PHY frame that specifies the upstream PHY burst in which the given upstream XGEM frame is transmitted. For the purpose of the initial counter block construction, the MSB of the SFC value is omitted, and the 50-bit field is used.

To obtain the IFC value of the given XGEM frame, the following block enumeration procedure applies (see Figure C.15.1).

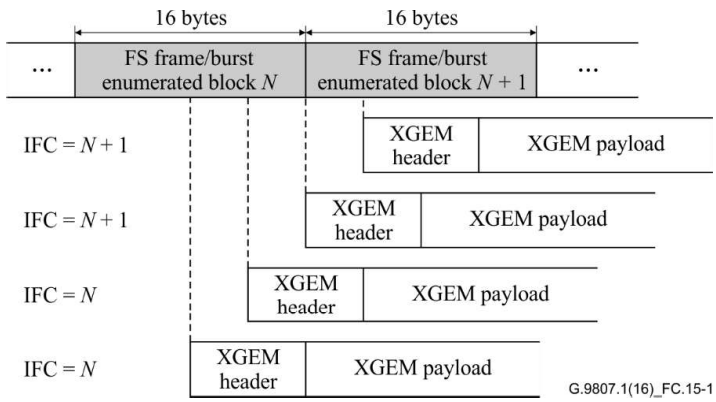

Figure C.15.1 – Obtaining the intra-frame counter value for a XGEM frame

In the downstream direction, the FS frame of the framing sublayer (see Figure C.8.1) is partitioned into 16-byte blocks, and these blocks are sequentially numbered from 0 to 8 464 (10G, FEC on), the last block being half-size. The size of the sequence number is 14 bits.

In the upstream direction, the FS burst of the framing sublayer (see Figure C.8.5) is partitioned into 16-byte blocks, and these blocks are sequentially numbered from S to (S+X). Here $S=(\lfloor StartTime/4 \rfloor)$ for the 2.48832 Gbit/s upstream line rate, S=StartTime for the 9.95328 Gbit/s upstream line rate, and X is the number of complete and incomplete 16-byte blocks in the FS burst, less 1. The size of the sequence number is 14 bits, as explained below. At 2.48832 Gbit/s upstream line rate, the largest StartTime is 9 719. Hence, the largest number for the first block of a burst is 2429. The maximum FS burst size is 9 720 words or 2 430 blocks. Hence, the largest possible 16-byte block number in an upstream FS burst is $4\ 858 < 2^{13}$. At 9.95328 Gbit/s upstream line rate, the largest possible 16-byte block number in an upstream burst is determined by the FS burst specification constraint (see clause C.8.1.1.3):

$$(StartTime + \sum_n GrantSize_n) \leq 14\ 580 < 2^{14}$$

A XGEM frame appearing within the payload of a downstream FS frame or upstream FS burst can occur in one of four phase positions with respect to the 16-byte block boundary. The IFC of aXGEM frame is the sequence number of the 16-byte block to which the first four bytes of the XGEM header belong.

The 128-bit initial counter block for a particular downstream XGEM frame is a concatenation of SFC and IFC for the given frame obtained, as described above, concatenated with itself. The 128-bit initial counter block for a particular upstream XGEM frame is a concatenation of SFC and IFC for the given frame obtained, as described above, concatenated with the bit-complement of itself (see Figure C.15.2).

Exhibit 1010
IPR2024-00899, USPN 9,806,892
218 of 290

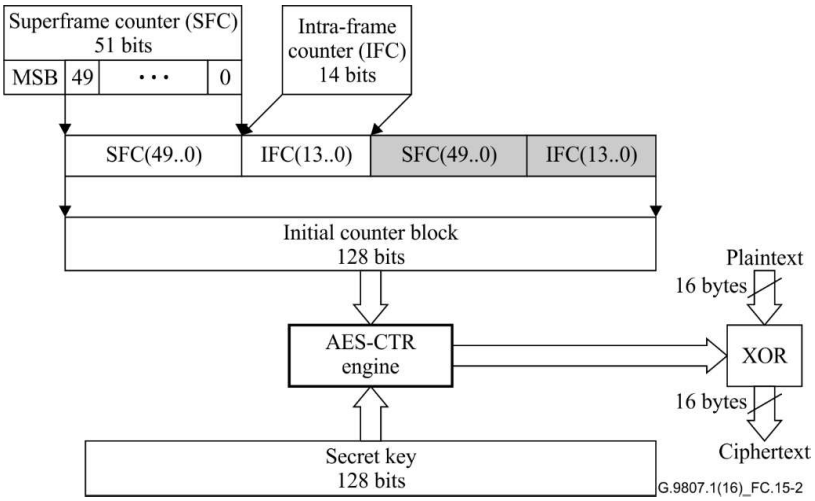

Figure C.15.2 – Initial counter block construction for downstream encryption (for upstream, the shaded fields are taken in bit-complement)

NOTE – It has been shown that two SFC (49..0) values, $0b1(0)_{49}$ and $0b0\ (1)_{49}$, can lead to several duplicated counter blocks in the upstream and downstream directions. As these values appear at the middle of the SFC(49..0) range, the window of weaker counter blocks occurs for approximately 250 μs once in 4 000 years. The potential impact can be mitigated by initializing the SFC to a small value.

C.15.5 Data encryption key exchange and activation mechanism

C.15.5.1 Overview

The data encryption configuration of an ONU is provisioned using OMCI. Each ONU advertises its security capabilities, which are required to include at least AES-128. The OLT is free to select zero or any one of the ONU's advertised capabilities; the OLT's choice then becomes binding on the ONU. For each non-default XGEM port, the OLT configures the port's encryption key ring attribute (GEM port network CTP managed entity, clause 9.2.3 of [ITU-T G.988]), which specifies whether the port is provisioned for encryption, and if so, in which direction encryption applies (downstream only or both downstream and upstream), and which data encryption key type (unicast or broadcast) should be used for the encrypted traffic. The default XGEM port has no configurable key ring, and is defined for bidirectional encryption using the unicast type key.

Provisioning a non-default XGEM port for encryption does not imply the traffic is always encrypted. The encryption status of each individual XGEM frame is determined dynamically by the sender, within the explicitly configured or pre-defined capabilities of the associated XGEM port, and is indicated in the XGEM frame header.

Whenever the default XGEM port traffic is encrypted in the downstream direction, the ONU is expected to encrypt the default XGEM port traffic upstream.

For each of two key types (unicast and broadcast), both the OLT and the ONU maintain an indexed array of two data encryption key entries. The broadcast keys are generated by the OLT and communicated to the ONUs using OMCI as described in clause C.15.5.4. The unicast keys are generated and communicated upstream by the ONU upon the OLT's instructions using the PLOAM channel as described in C.15.5.3. The value of the unicast key is not exposed to the OMCI.

The type of the data encryption key used to encrypt the payload of a particular XGEM frame on transmission is implicit in the XGEM Port-ID. The Key_Index field of the XGEM frame header indicates whether the payload is encrypted and, if so, which of the two data encryption keys of the given type is used. The specific key selected for encryption shall be valid at the XGEM frame

Exhibit 1010
IPR2024-00899, USPN 9,806,892
219 of 290

transmission time, as determined by the respective key exchange protocol. The sender starts using the new data encryption key during the time interval when both keys of the respective type are valid. When no valid data encryption key is available (for example, immediately after ONU reactivation), the sender transmits XGEM frames without encryption using a Key_Index value of 0.

C.15.5.2 Cryptographic method

The data encryption keys are themselves transmitted between the OLT and the ONU encrypted with the AES-128 block cipher [NIST FIPS-197] which is used in Electronic Codebook mode (AES-ECB), as specified in [NIST SP800-38A]. In AES-ECB encryption, the forward AES-128 function is applied directly and independently to each block of plaintext using a secret key to produce a block of ciphertext. In AES-ECB decryption, the inverse AES-128 function is applied directly and independently to each block of ciphertext with the same secret key to restore the original block of plaintext. The notation for invocation of the AES-ECB algorithm is:

$$C = \text{AES-ECB}(K, P);$$

$$P = \text{AES-ECB}^{-1}(K, C);$$

Here *P* is a block of plaintext, *C* is a block of ciphertext and *K* is the block cipher key. For the purposes of this Recommendation, both the block size and the key length are equal to 128 bits.

C.15.5.3 Unicast encryption

The OLT and the ONU maintain a number of logical state variables that are associated with the encryption and decryption functions, and this state information guides the exchange and activation of new key material. The OLT's state diagram is shown in Figure C.15.4, and the ONU's diagram is shown in Figure C.15.5. Both of the state machines run entirely in the Operation state (O5). When the ONU is activated or reactivated, the data encryption keys are invalidated and are reacquired via PLOAM exchange after the shared KEK is established.

C.15.5.3.1 Sequence of encryption key exchange and activation events

The process of unicast data encryption key exchange and activation is performed under the control of the OLT by means of a series of PLOAM messages. The causal sequence of associated events is given below:

- The OLT begins by requesting a new unicast data encryption key from the ONU by using the Key_Control(Generate) PLOAM message that contains the key index for the new key. A single copy of the request is sent, and if there is no response, the OLT should retry the request.
- Upon receipt of the Key_Control(Generate) PLOAM message from the OLT , the ONU generates a new encryption key using a random number generator suitable for cryptographic purposes. The ONU stores the new key in its encryption control and decryption control structures (according to the specified key index). The ONU then sends the new key to the OLT using the Key_Report(NewKey) PLOAM message. The key is encrypted in the Key_Report(NewKey) PLOAM message with AES-ECB using KEK.
- When the OLT receives the Key_Report(NewKey) PLOAM message, it decrypts the new key and stores it in its logical encryption control and decryption control structures for the originating ONU, according to the specified key index.
- The OLT then sends the Key_Control(Confirm) PLOAM message that contains the key index of the newly generated key.
- When the ONU receives the Key_Control(Confirm) PLOAM message, it knows that the OLT now has the new key. Therefore, the ONU changes the new key state in the encryption control structure to active. The ONU responds with a Key_Report(ExistingKey) PLOAM message indicating the "Key_Name" of the specified key.

Exhibit 1010
IPR2024-00899, USPN 9,806,892
220 of 290

– If, at any time, the OLT wishes to check the ONU's key against its own (to diagnose a key mismatch situation), the OLT can issue a Key_Control(Confirm) PLOAM message for a Key_Index of an existing key. This triggers the ONU to respond with a Key_Report(ExistingKey) PLOAM message containing the key name.

The preceding description pertains to a normal key exchange process; however, the state diagrams in clauses C.15.5.3.2 and C.15.5.3.3 are the primary reference for the behaviour.

If on receipt of a Key_Report(ExistingKey) PLOAM message, the OLT discovers a discrepancy between the reported and locally computed key hashes, it should stop using the data encryption key with the specified key index and take remediation actions at its own discretion. Such actions may include, for example, reconfirmation of the key, generation of a new key, or re-authentication of the ONU.

Referring to the state diagrams of Figure C.15.4 and Figure C.15.5, the notational conventions "oldkey" and "newkey" denote the two data encryption keys (with the corresponding key indices), of which the former is active before the key exchange is initiated, and the latter, after the key exchange is completed.

Note that in the course of the key exchange in the view of both the OLT and the ONU, the moment the oldkey ceases to be valid for transmit differs from the moment the oldkey ceases to be valid for receive, and the moment the newkey becomes valid for transmit differs from the moment the newkey becomes valid for receive.

For the OLT as well as for the ONU, there is a time interval when both oldkey and newkey are valid for transmit, and there is a time interval when both oldkey and newkey are valid for receive. Within the interval when both oldkey and newkey are valid for transmit, the respective sender selects a moment when it starts encrypting the outgoing XGEM frame payload with the newkey and putting the Key_Index of the newkey into the outgoing XGEM frame header. Once the sender switches to using the newkey for transmit, the sender should stop using and discard the oldkey for transmit. Within the interval when both oldkey and newkey are valid for receive, the receiver accepts either Key_Index to decrypts the incoming XGEM frame payload. Outside that interval, the receiver discards the XGEM frame payload that is encrypted with an invalid key.

It is the responsibility of the OLT to ensure that the Key_Index parameter of the Key_Control PLOAM messages is set correctly. In particular, the OLT should abstain from sending Key_Control(Confirm) PLOAM message for the Key_Index that is presently invalid at the ONU and, except for the key mismatch recovery situations, from sending Key_Control(Generate) PLOAM message for the only currently valid Key_Index at the ONU.

Figure C.15.3 shows key validity in key exchange.

Exhibit 1010
IPR2024-00899, USPN 9,806,892
221 of 290

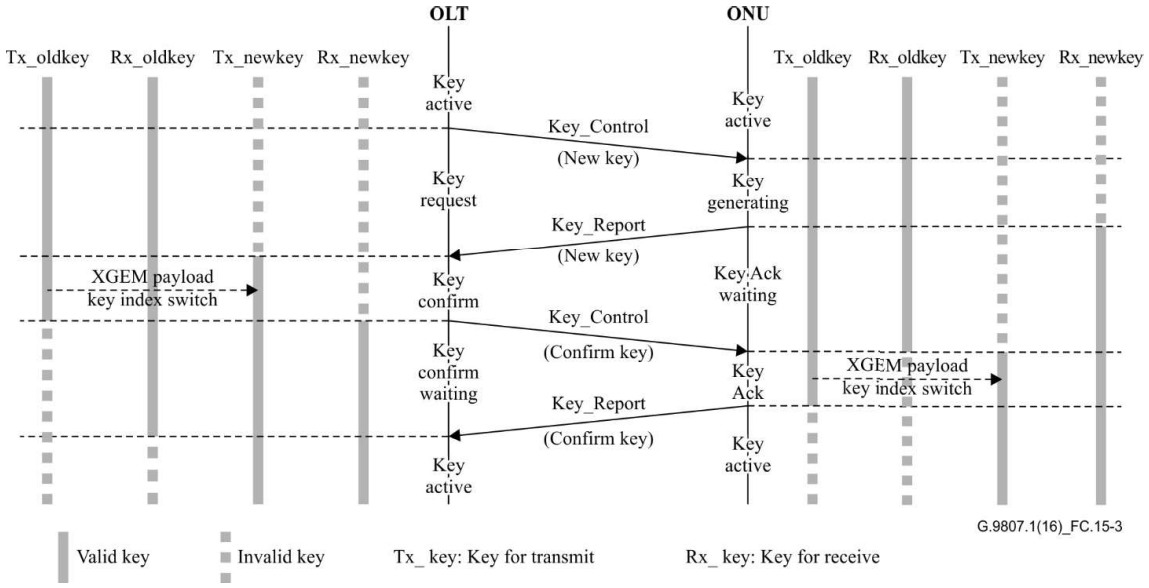

Figure C.15.3 – Key validity in key exchange

C.15.5.3.2 OLT states and state diagram

The five OLT states of encryption key exchange and activation are defined as follows:

a) Key Inactive state (KL0)

The ONU is registered and is in Operation state (O5). There is no active key for XGEM payload encryption. No keys are valid to receive and/or transmit between the OLT and the ONU. When the OLT decides to initiate the unicast data encryption key exchange, it moves to the Key Request state (KL1).

b) Key Request state (KL1)

The OLT initiates a new key request by sending a Key_Control(Generate) PLOAM message, that instructs the ONU to generate a new key and to send it upstream. In this state, the new key is yet unknown to the OLT and, therefore, is invalid to receive and invalid to transmit. If there is an old key (i.e., an existing key), the old key remains valid to receive and valid to transmit at the OLT. Once a Key_Report(NewKey) PLOAM message is received, the OLT moves to the Key Confirm state (KL2).

If timer TK1 expires and no Key_Report(NewKey) message is received, the OLT initiates a new key request.

c) Key Confirm state (KL2)

In this state, the new key is valid to transmit and invalid to receive at the OLT. The old key (if there is an old key) is valid to receive and valid to transmit at the OLT. The OLT selects the moment to begin encrypting XGEM payload with the new key.

d) Key Confirm Waiting state (KL3)

The OLT sends a Key_Control(Confirm) PLOAM message for the specified key index. The new key becomes valid to receive and valid to transmit at the OLT. The old key (if there is an old key) remains valid to receive but becomes invalid to transmit at the OLT. Once a Key_Report(ExistingKey) PLOAM is received, the OLT moves to the Key Active state (KL4).

If timer TK2 expires and no Key_Report(ExistingKey) has been received, the OLT sends a new Key_Control(Confirm) PLOAM message.

Exhibit 1010
IPR2024-00899, USPN 9,806,892
222 of 290

e) Key Active state (KL4)

Once a Key_Report(ExistingKey) PLOAM message is received, the old key (if there is an old key) becomes invalid to receive and invalid to transmit. The new key is the only active key for receive and transmit between the OLT and the ONU.

If a rekey is required, the OLT moves to the Key Request state (KL1).

If a key check is required, the OLT sends a Key_Control(Confirm) PLOAM message, but no state transition occurs.

To support encryption key exchange and activation, the OLT maintains three timers:

TK1 – OLT key exchange waiting timer

Timer TK1 is used to abort an unsuccessful key exchange or key check attempt by limiting the overall time an OLT can sojourn in states KL1, KL2 and KL3. The recommended initial value of timer TK1 is 100 ms.

TK2 – Key waiting timer

Timer TK2 is used to abort an unsuccessful key request attempt by limiting the overall time an OLT can sojourn in state KL1. The recommended initial value of timer TK2 is 10 ms.

TK3 – Key confirmation waiting timer

Timer TK3 is used to abort an unsuccessful key confirmation request attempt by limiting the overall time an OLT can sojourn in state KL3. The recommended initial value of timer TK3 is 10 ms.

Figure C.15.4 shows a graphic representation of the states of the OLT.

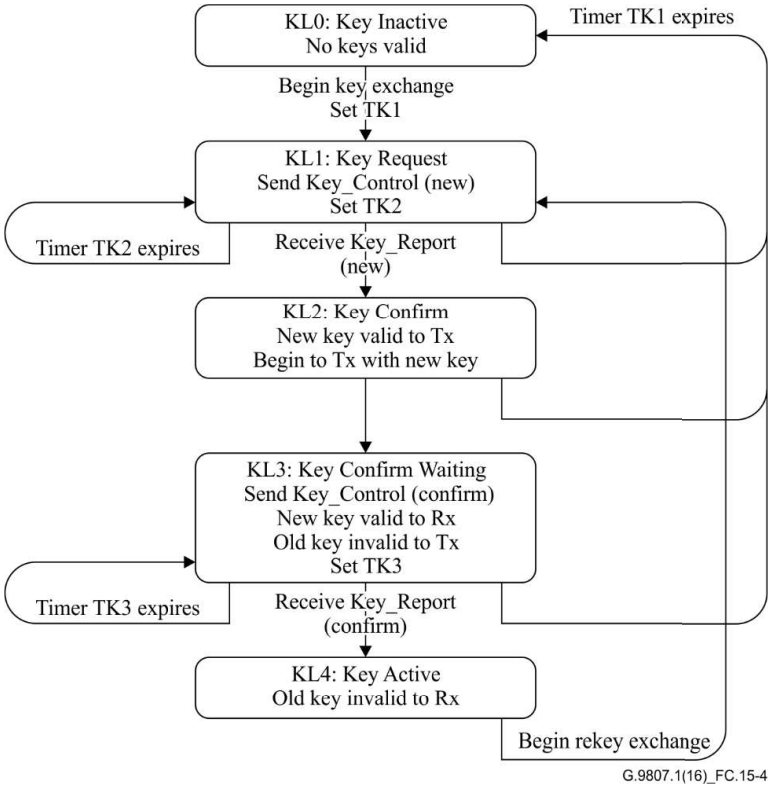

Figure C.15.4 – OLT key exchange state diagram

Exhibit 1010
IPR2024-00899, USPN 9,806,892
223 of 290

C.15.5.3.3 ONU states and state diagram

The five ONU states of encryption key exchange and activation are defined as follows:

a) Key Inactive state (KN0)

The ONU is registered and is in Operation state (O5). There are no active keys for XGEM payload encryption between the OLT and the ONU. When a Key_Control(Generate) PLOAM message for a new key is received, the ONU moves to the Key Generating state (KN1).

b) Key Generating state (KN1)

The ONU generates a new key. If there is an old key, the old key is valid to receive and valid to transmit at the ONU. The new key is invalid to receive and invalid to transmit at the ONU.

c) Key Ack Waiting state (KN2)

The ONU sends a Key_Report(NewKey) PLOAM message to inform the OLT of the new key. The new key is encrypted for PLOAM transmission with AES-ECB using KEK. The new key becomes valid to receive and remains invalid to transmit at the ONU. Once a Key_Control(Confirm) PLOAM message is received, the ONU moves to the Key Ack state (KN3).

If timer TK5 expires and no Key_Control(Confirm) message is received, the ONU resends the Key_Report(NewKey) PLOAM message with the new key. If the ONU receives a new Key_Control(Generate) PLOAM message, it also resends the Key_Report(NewKey) PLOAM message. In this case it is at ONU's discretion to use a previously generated key, or to generate yet another new key.

d) Key Ack state (KN3)

In this state, the new key is valid to receive and becomes valid to transmit at the ONU. The old key (if there is an old key) remains valid to transmit but becomes invalid to receive at the ONU. The ONU begins to encrypt XGEM payload with the new key. The ONU acknowledges the OLT by sending a Key_Report(ExistingKey) PLOAM message with the Key_Name of the newly generated key. Once the Key_Report(ExistingKey) PLOAM message is sent, the ONU moves to the Key Active state (KN4).

e) Key Active state (KN4)

In this state, the new key is valid to receive and valid to transmit at the ONU. The old key (if there is an old key) becomes invalid to receive and invalid to transmit at the ONU.

Once a Key_Control(Generate) PLOAM message is received for the presently inactive Key_Index, the ONU moves to the Key Generating state (KN1) with the active key being referenced to as old key.

If at any time a Key_Control(Confirm) PLOAM message is received for the existing key, the ONU sends a Key_Report(ExistingKey) PLOAM message, but no state transition occurs.

To support encryption key exchange and activation, the ONU maintains two timers:

TK4 – ONU key exchange waiting timer

Timer TK4 is used to abort an unsuccessful key exchange or key check attempt by limiting the overall time an ONU can sojourn in the set of states KN1, KN2 and KN3. The recommended initial value of timer TK4 is 100 ms.

TK5 – Key Ack waiting timer

Timer TK5 is used to limit the overall time an ONU can sojourn in state KN2. The recommended initial value of timer TK5 is 20 ms.

Figure C.15.5 illustrates a graphic representation of the states of the ONU.

Exhibit 1010
IPR2024-00899, USPN 9,806,892
224 of 290

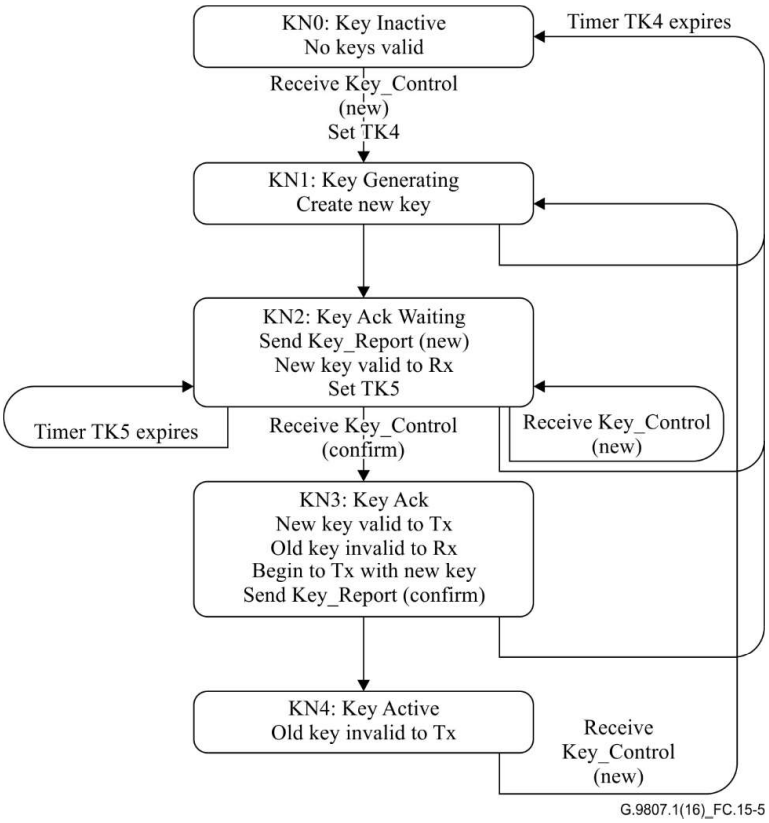

Figure C.15.5 – ONU key exchange state diagram

C.15.5.4 Downstream multicast encryption

The key exchange process is initiated by the OLT. The OLT selects the key index to be changed. The OLT takes this key index out of use, to avoid key mismatch during the process of re-keying. The OLT generates each broadcast key using a random number generator suitable for cryptographic purposes.

Using OMCI, the OLT then writes the key to the broadcast key table attribute (see clause 9.13.11 of [ITU-T G.988]) in the MIB of each ONU that is provisioned to receive multicast traffic. The broadcast encryption key is encrypted with the AES-ECB algorithm using the KEK.

The OMCI is an acknowledgement-based protocol, so the OLT can confirm that the ONU has indeed modified the key attribute in question. Once the OLT has confirmed that all relevant ONUs have the new broadcast key, the OLT can put the key index back into service.

C.15.6 Integrity protection and data origin verification for PLOAM

For the PLOAM messaging channel, sender identity verification and protection against forgery is achieved with the use of the 8-byte message integrity check (MIC) field of the PLOAM message format.

C.15.6.1 Cryptographic method

The MIC field of the PLOAM message format is constructed using the cipher-based message authentication code (CMAC) algorithm specified in [NIST SP800-38B] with the 128-bit advanced encryption standard (AES-128) encryption algorithm [NIST FIPS-197] as the underlying block cipher.

The parameters and the notation for invocation of the AES-CMAC function are described in clause C.15.3.1.

Exhibit 1010
IPR2024-00899, USPN 9,806,892
225 of 290

C.15.6.2 MIC calculation

Given the 40 bytes of the PLOAM message content and the PLOAM integrity key PLOAM_IK, the sender and receiver can calculate the MIC field as expressed in C.15-7:

$$\text{PLOAM-MIC} = \text{AES-CMAC}\ (\text{PLOAM_IK}, C_{dir} \mid \text{PLOAM_CONTENT}, 64) \qquad \text{(C.15-7)}$$

Where C_{dir} is the direction code: C_{dir} = 0x01 for downstream and C_{dir} = 0x02 for upstream, and *PLOAM_CONTENT* denotes octets 1 to 40 of the PLOAM message. Figure C.15.6 illustrates the PLOAM integrity protection.

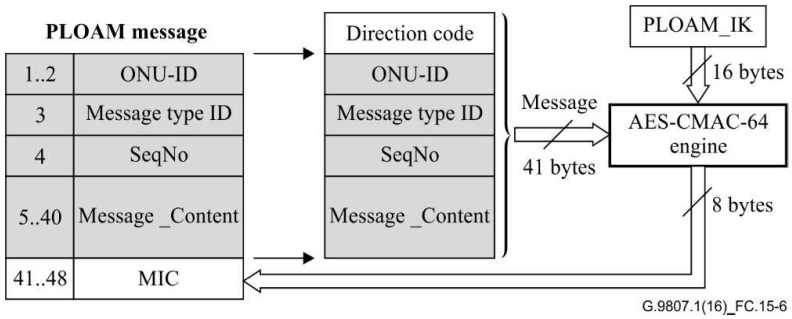

Figure C.15.6 – PLOAM integrity protection

C.15.7 Integrity protection and data origin verification for OMCI

For the OMCI traffic, the sender identity verification and protection against forgery is achieved with the use of the 4-byte message integrity check (MIC) field of the OMCI message format.

C.15.7.1 Cryptographic method

The MIC field of the OMCI message format is constructed using the cipher-based message authentication code (CMAC) algorithm specified in [NIST SP800-38B] with the 128-bit advanced encryption standard (AES-128) encryption algorithm [NIST FIPS-197] as the underlying block cipher.

The parameters and the notation for invocation of the AES-CMAC function are described in clause C.15.3.1. Figure C.15.7 illustrates OMCI integrity protection.

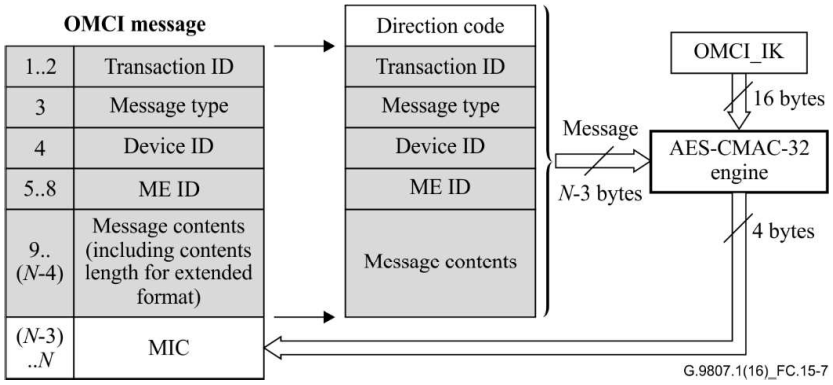

Figure C.15.7 – OMCI integrity protection

C.15.7.2 MIC calculation

Given the content of the OMCI message and the OMCI integrity key OMCI_IK, the sender and receiver can calculate the MIC field as expressed in C.15-8:

$$\text{OMCI-MIC} = \text{AES-CMAC}\ (\text{OMCI_IK}, (C_{dir} \mid \text{OMCI_CONTENT}), 32) \qquad \text{(C.15-8)}$$

Exhibit 1010
IPR2024-00899, USPN 9,806,892
226 of 290

Where C_{dir} is the direction code: C_{dir} = 0x01 for downstream and C_{dir} = 0x02 for upstream, and OMCI_CONTENT refers to the OMCI message except the last four bytes.

C.15.8 Integrity and data origin verification key switching

C.15.8.1 Use of the default key

At the start of ONU activation, the PLOAM integrity key for the given ONU is set to the default value of $(0x55)_{16}$, which is used for PLOAM message exchange while no MSK is available. Once the ONU communicates its Registration_ID to the OLT, the basic MSK is established and all the derivative shared keys are obtained. The OMCI integrity key does not require an explicit default, as no OMCI exchange takes place prior to MSK establishment and no broadcast OMCC channel is supported.

The downstream broadcast PLOAM messages, as well as certain types of the upstream and downstream unicast PLOAM messages (such as the Serial_Number_ONU PLOAM message, the Deactivate_ONU-ID PLOAM message, the Request_Registration and Registration PLOAM messages) are always protected by a MIC that is generated with the default PLOAM integrity key. These messages, therefore, can be successfully transmitted even if the OLT and ONU have not established or no longer agree on the dynamically derived keys. See PLOAM message formats for individual PLOAM message types in clauses C.11.3.3 and C.11.3.4 for the details of the default PLOAM integrity key applicability.

C.15.8.2 Key switching for OMCI-based secure mutual authentication

The following description refers to the Enhanced security control attributes and procedures specified in clause 9.13.11 of [ITU-T G.988].

The authentication is implemented as a three-step symmetric-key-based challenge-response procedure in the OMCC channel followed by a PLOAM handshake in the form of Registration_ID exchange.

The OLT initiates the OMCI-based authentication at its discretion by writing the OLT random challenge table attribute. From this point to the completion of the authentication procedure, the OLT refrains from sending to the ONU any OMCI messages unrelated to authentication.

The ONU generates a random challenge of its own, computes the response to the OLT challenge, and initiates the secure MSK and derived shared key calculation procedure. Once computed, the secure keys are stored for future use.

Figure C.15.8 illustrates OMCI-based secure mutual authentication procedure.

Exhibit 1010
IPR2024-00899, USPN 9,806,892
227 of 290

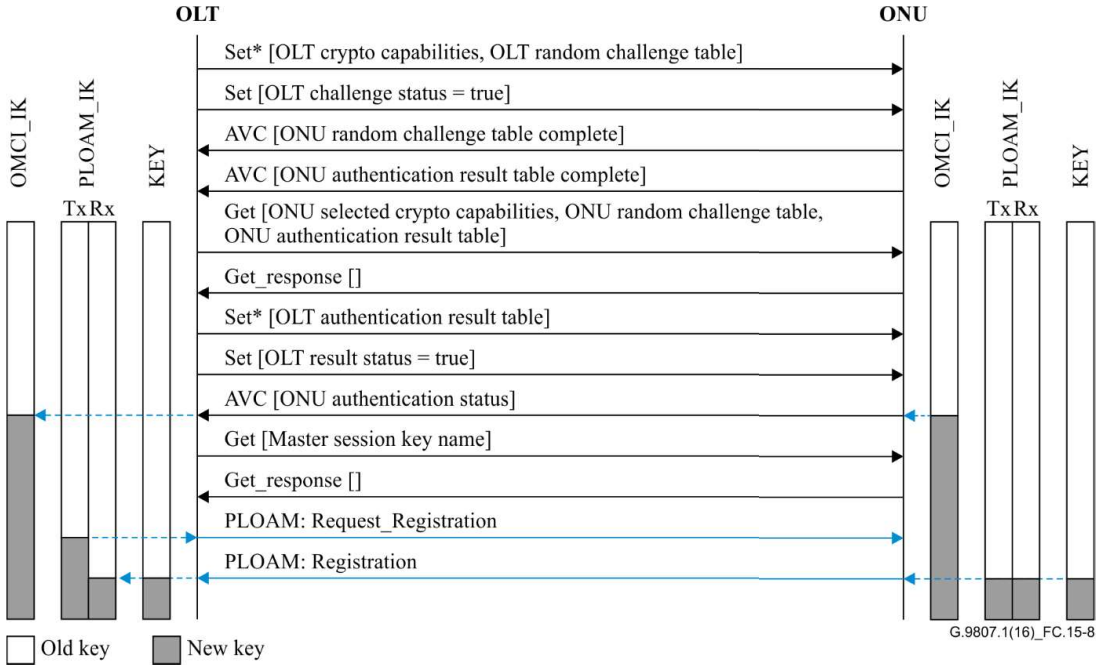

NOTE – Set* indicates multiple set operations as needed to fill the table.

Figure C.15.8 – OMCI-based secure mutual authentication procedure (Unless explicitly specified otherwise, the messages are exchanged over the OMCC channel)

Upon receipt of the ONU's response to OLT's random challenge along with the ONU random challenge table, the OLT unilaterally verifies the ONU's authentication status. If the unidirectional ONU-to-OLT authentication fails, further execution of the authentication procedure is aborted. If the unidirectional ONU-to-OLT authentication succeeds, the OLT calculates the MSK and the derivative shared keys, storing them for future use. Once the key calculation is completed, the OLT proceeds with execution of the authentication procedure by writing the OLT authentication result table and OLT result status to the ONU.

Upon receipt of the OLT response, the ONU verifies the OLT authentication status and fills in the ONU authentication state attribute. The ONU uses the next available default Alloc-ID grant opportunity to transmit an attribute value change (AVC) on the ONU authentication state attribute. If the unidirectional OLT-to-ONU authentication has failed, a message integrity check (MIC) on the AVC message is generated using the previously active OMCI_IK. If the unidirectional OLT-to-ONU authentication has succeeded (and thus the mutual authentication has succeeded as well), the MIC field on the AVC message is generated with the new OMCI_IK. The new OMCI_IK is committed active at the ONU.

When the OLT receives the AVC on the ONU authentication state from the ONU, it checks whether the MIC field has been generated using the old OMCI_IK or the new OMCI_IK. If the old OMCI_IK was used by the ONU, the OLT discards the previously calculated key material. If the new OMCI_IK was used by the ONU, the OLT commits the new OMCI_IK as active. The OLT then initiates a PLOAM handshake by generating a downstream Request_Registration PLOAM message to the ONU. The purpose of the handshake is to delineate the activation of the secure shared keys in case of authentication success, or to obtain the registration-based MSK and derived shared keys in case of authentication failure. The Request_Registration PLOAM message is protected, by definition, using the default PLOAM_IK. Upon transmission of the Request_Registration message, the OLT commits the new PLOAM_IK as active on transmit.

Exhibit 1010
IPR2024-00899, USPN 9,806,892
228 of 290

Once the ONU receives the downstream Request_Registration PLOAM message, it generates an upstream Registration PLOAM message, which is protected, by definition, using the default PLOAM_IK. Upon transmission of the Registration message, the ONU commits the new PLOAM_IK and KEK as active.

Once the OLT receives the upstream Registration PLOAM message from the ONU, it commits the PLOAM_IK and KEK as active on receive, thus completing the key switching procedure.

C.15.8.3 Key switching for IEEE 802.1x-based authentication

Once the IEEE 802.1x-based mutual authentication or re-authentication process has completed, the OLT and the authenticated ONU have a 200 ms grace interval to compute the new set of derived shared keys. Within this interval, a sender should either remain silent or continue to use the old integrity key and switch to the new one as soon as it detects the new key in the received message, or at the end of the grace interval, at the latest. While the new key is being computed, a receiver continues checking the received messages with the old key. When the new key becomes available, the receiver should start checking messages with both old and new keys and switch to using the new key only once the new key check is successful, or at the end of the grace interval, at the latest.

C.15.8.4 MIC failure considerations

If MIC failure is caused by random transmission errors, then it is likely a rare event that can be correlated with the observed bit error ratio (BER) level. A persistent MIC failure, on the other hand, is likely caused by an integrity key mismatch at the transmitter and receiver and may indicate either a security threat or a malfunction of the authentication and key generation procedure. In case of persistent message integrity check failure, of which the OLT learns either directly (upstream MIC failure) or through the lack of expected management traffic flow from the ONU (downstream MIC failure), the OLT recognizes a loss of PLOAM channel ($LOPC_i$) defect or a loss of OMCC channel ($LOOC_i$) defect for a given ONU and has to select, at its discretion, the appropriate mitigation actions. These mitigation actions may include repeating authentication using the same or an alternative mechanism, blocking upstream and downstream traffic, deactivating or disabling the offending ONU, or executing a rogue ONU diagnostic procedure.

C.15.9 XGS-PON systems with reduced data encryption strength

Clause C.15.9.1 introduces the concept of effective key length. Clause C.15.9.2 contains the conditional requirements that are mandatory only for XGS-PON systems with specified effective key lengths less than 128 bits. For an ONU, the effective key length is provisioned using the effective key length attribute (see clause 9.13.11 of [ITU-T G.988]).

C.15.9.1 Effective key length

The standard key size used for AES data encryption in XGS-PON is 128 bits. Per operator requirements, a XGS-PON system may optionally employ a data encryption system of reduced strength by replacing a part of the key with a well-defined bit pattern. The number of randomly generated bits of the key is referred to as the effective key length.

C.15.9.2 Data encryption key format

In a XGS-PON system with reduced data encryption strength, the effective key length L_{eff} is a multiple of 8 bits, and each network element responsible for data encryption key generation replaces the $(128 - L_{eff})/8$ most significant octets of the 128-bit key with the value 0x55, as shown in Figure C.15.9.

Exhibit 1010
IPR2024-00899, USPN 9,806,892
229 of 290

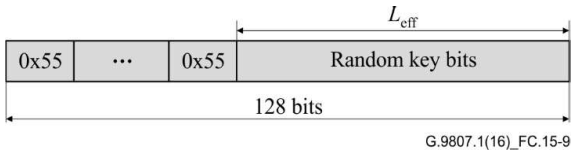

Figure C.15.9 – Format of a data encryption key with reduced effective length

In a XGS-PON system with reduced data encryption strength, a network element responsible for the generation of a data encryption key should be able to report the effective key length to the element management system.

C.16 XGS-PON power management

For a variety of reasons, it is desirable to reduce the power consumed by an ONU as much as possible:

– Over time, the natural evolution of technology tends toward more efficient realizations of given functions, a tendency that is offset, at least to some extent, by increasing levels of functionality and speed.

– If there is a way for the ONU to determine that a subscriber interface is idle, it is desirable for the ONU to power down the circuitry associated with that interface, while retaining the capability to detect subscriber activity on that interface. The details vary as a function of the interface type.

– The extent of feasible power reduction depends on the acceptable effect on service. The maximum possible savings occurs when a subscriber intentionally switches off an ONU, for example, overnight or during a vacation.

– During failures of AC power, some degradation of service is generally acceptable. To conserve backup battery lifetime, it is desirable for the ONU to power down circuitry associated with all interfaces, except those considered to provide essential services. Different operators and customers may have different definitions of essential services, and may wish to prioritize the time when the interfaces are powered down. This feature, which is known as power shedding, is described in clause I.2.7 of [ITU-T G.988].

The preceding techniques for power management are a matter of ONU design and subscriber and operator practice, and are beyond the scope of this Recommendation.

This clause addresses three additional means of power management, which does require TC layer support. One is called Doze mode; another is referred to as Cyclic sleep mode; the third is known as Watchful sleep mode. The Watchful sleep mode combines the semantic features of the Doze and Cyclic sleep modes while reusing the states and transition of the Doze mode on the ONU side, and those of the Cyclic sleep mode on the OLT side. To support XG-PON ONUs, the XGS-PON OLT must support all three modes. For XGS-PON ONU, only the Watchful sleep mode needs to be supported.

The TC-layer supported ONU power management modes are negotiated via OMCI, and may be combined with any of the other power reduction techniques.

The specific power management capabilities are subject to operators' system requirements, and for each ONU are negotiated over OMCI upon ONU activation.

C.16.1 XGS-PON power management

C.16.1.1 Power management configuration and signalling

The OLT uses OMCI to discover the ONU's power management capabilities and to configure its power management attributes and modes. To control the power management behaviour of a given ONU, the ONU and the OLT maintain a pair of power management state machines. The ONU state

Exhibit 1010
IPR2024-00899, USPN 9,806,892
230 of 290

machine and the corresponding OLT state machine operate in partial state alignment. The primary signalling mechanism used to coordinate the ONU and OLT state machines is based on the PLOAM messages. The output PLOAM messages are generated and queued for transmission at the time of state transitions. The states of both ONU and OLT state machines can be classified into two mutually exclusive subsets: the full power states and the power saving states. Only the state transitions between the full power and the power saving state subsets generate an output PLOAM message. If the sojourn in the target state of a transition is controlled by a timer, the timer is not started until the actual transmission of the message. As a secondary signalling mechanism used to speed up or wake up a sleeping ONU, the forced wake-up indication bit is carried within a BWmap allocation structure.

C.16.1.2 Power management parameter definitions

Table C.16.1 defines the essential intervals, timers and counters. Parameters known to both ONU and OLT are exchanged using OMCI [ITU-T G.988]. Parameters local to the ONU or the OLT are defined only for use in the description below.

Table C.16.1 – Power management parameters

Parameter	Description	Defined by	Known to
Ilowpower	Ilowpower is the maximum time the ONU spends in a LowPower state (i.e., Asleep, Listen or Watch state), as a count of 125 microsecond frames. Local wake-up indications (LWIs) or remote events, if detected, may truncate the ONU's sojourn in these states.	OLT	ONU, OLT
Tlowpower	Local timer at ONU. Upon entry to a LowPower state (i.e., Asleep, Listen or Watch state), the ONU initializes Tlowpower to a value equal to or less than Ilowpower. Secondary internal timers may be required to guarantee that the ONU will be fully operational when it enters the Aware state after an interval not to exceed Ilowpower.	ONU	ONU
Iaware	Iaware is the minimum time the ONU spends in an Aware state (i.e., SleepAware, DozeAware or WatchAware) before transitioning to a LowPower state, as a count of 125 microsecond frames. During the Iaware interval, local or remote events may independently cause the ONU to enter the ActiveHeld state rather than returning to a LowPower state.	OLT	ONU, OLT
Taware	Local timer at ONU, initialized to a value equal to or greater than Iaware once downstream synchronization is obtained upon entry to an Aware state (i.e., SleepAware, DozeAware or WatchAware). Taware controls the dwell time in an Aware state before the ONU re-enters the corresponding LowPower state.	ONU	ONU
Itransinit	The worst-case transceiver initialization time: the time required for the ONU to gain full functionality when leaving a LowPower state, measured in units of 125 μs PHY frames, and known by design. The value of zero indicates that the ONU in a low power mode can respond to a bandwidth grant without delay.	ONU	ONU, OLT
Itxinit	Transmitter initialization time: the time required for the ONU to gain full functionality when turning on the transmitter while the receiver has remained on, measured in units of 125 μs PHY frames. The value of zero indicates that the ONU in a low power mode can respond to a bandwidth grant without delay.	ONU	ONU, OLT

Exhibit 1010
IPR2024-00899, USPN 9,806,892
231 of 290

Table C.16.1 – Power management parameters

Parameter	Description	Defined by	Known to
Irxoff	Irxoff is the maximum time the OLT can afford to wait from the moment it decides to wake up an ONU in one of the low power modes until the ONU is fully operational, specified as a count of 125 microsecond frames. The ONU timer Trxoff and the OLT timer Talerted are initialized based on Irxoff,	OLT	ONU, OLT
Trxoff	Local timer at ONU. The ONU uses this timer in the Watch state of the Watchful sleep mode while checking the downstream signal for the remote wake-up indications to ensure that the time between the two consecutive checks does not exceed the provisioned Irxoff interval.	ONU	ONU
Talerted	Local timer to bound the time that the OLT state machine remains in an alerted state before entering the AwakeForced state. Talerted should be initialized to at least Itroff + Itransinit + roundtrip delay + tolerances for Rx synchronization, bandwidth grant irregularities, and processing time.	OLT	OLT
Ter_i	Local handshake timer at the OLT that defines the latest instant at which an upstream burst is expected from ONU_i when it is in one of the low power modes. The OLT reinitializes and starts this timer when the OLT's state machine for the given ONU transitions into the LowPowerSleep or LowPowerDoze/Watch state and each time an upstream burst is received from the ONU while in that state. If Ter_i expires, the OLT declares a handshake violation and attempts to force the ONU awake. To determine the initial value of Ter_i, the OLT is responsible to consider the provisioned Ilowpower interval and any possible effects of transceiver initialization, synchronization and irregularities in the bandwidth grant cycle.	OLT	OLT
Ihold	Minimum sojourn in the ActiveHeld state.	OLT	ONU, OLT
Thold	Local timer at the ONU that is initialized to Ihold upon transmission of SR(Awake) after entry into ActiveHeld state and that enforces the minimum sojourn in the ActiveHeld state.	ONU	ONU

C.16.1.3 Power management state machine specifications

The power management behaviour of a given ONU is controlled by a pair of state machines residing at the OLT and the ONU. While the state nomenclature of the OLT machine is similar to that of the ONU machine, the two state machines operate in just partial state alignment. The lock-step state tracking is not an objective of the protocol.

C.16.1.3.1 XGS-PON ONU state machine

The ONU power management states along with their corresponding semantic description are listed in Table C.16.2. The set of input events is represented in Table C.16.3. The state transition diagram is illustrated in Figure C.16.1. The normative specification of the state transitions and outputs is given in Table C.16.4.

Exhibit 1010
IPR2024-00899, USPN 9,806,892
232 of 290

Table C.16.2 – XGS-PON ONU power management states

State	Semantics
(1) ActiveHeld	The ONU is fully responsive, forwarding downstream traffic and responding to all bandwidth allocations. Power management state transitions do not occur. The minimum sojourn in this state is enforced by the Thold timer. Upon entrance to this state, the ONU sends a Sleep_Request (Awake) PLOAM message. On the state diagrams, this is abbreviated as SR(Awake).
(2) ActiveFree	The ONU is fully responsive, forwarding downstream traffic and responding to all bandwidth allocations. Power management state transition requests are a local decision.
(3) Aware	Both ONU receiver and transmitter remain on. This state persists for a specified duration Iaware if not truncated by the arrival of a local stimulus LWI or receipt of SA(OFF) from the OLT. The ONU forwards downstream traffic and responds to all grant allocations. It is the responsibility of the OLT to transmit bandwidth allocations containing the PLOAMu flag with frequency sufficient to ensure that an aware ONU sees at least one.
(4) LowPower	The ONU transmitter is off. The ONU periodically checks the downstream signal for remote wake-up indications. When the downstream signal is checked, the ONU does not respond to grant allocations and does not forward downstream traffic. This state persists for a specified duration Ilowpower if not truncated by the arrival of a local stimulus LWI or receipt of SA(OFF) or FWI from the OLT . Before exiting this state, the ONU ensures that it is fully powered up and capable of responding to both upstream and downstream traffic and control.

Exhibit 1010
IPR2024-00899, USPN 9,806,892
233 of 290

Table C.16.3 – XGS-PON ONU state machine inputs

Input categories	Input	Semantics
PLOAM events	Sleep_Allow(ON)	The OLT grants permission to the ONU to exercise watchful sleep management mode
	Sleep_Allow(OFF)	The OLT withholds consent to exercise a power management mode.
Bit-indication event	Forced wake-up indication (FWI)	Transmitting FWI as a flag of an allocation structure, the OLT requires immediate ONU wake-up and its transition to the ActiveHeld state.
Timer events	Thold expiration	The event applies in the ActiveHeld state, controlling the minimum sojourn in that state.
	Taware expiration	The event applies in the Aware state, controlling the sojourn in that state.
	Tlowpower expiration	The event applies in the LowPower state, controlling the sojourn in that state.
Local events	Local sleep indication (LSI)	The ONU has no local reason to remain at full power and is willing to exercise the watchful cyclic sleep power management mode.
	Local wake-up indication (LWI)	A local stimulus prevents the ONU from exercising any power management mode.
NOTE – The LSI and LWI events are conceptually derived from the ONU's binary stimulus status level (Awake/Sleep) and correspond to the events of the level change or, in case of ActiveFree state, to the sampled value at the time of the transition. The specific criteria for the local stimulus definition remain out of scope of this Recommendation.		

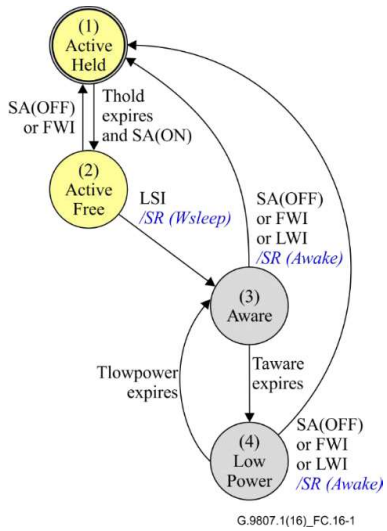

Figure C.16.1 – XGS-PON ONU state transition diagram (initial state circled)

NOTE – The vertices on the state diagram graph can be qualified as either "tense" or "relaxed" forming the yellow and grey subgraphs, respectively. As a rule, an output PLOAM message is generated only on a state transition that crosses the subgraph boundary.

Exhibit 1010
IPR2024-00899, USPN 9,806,892
234 of 290

Table C.16.4 –XGS-PON ONU state transition and output table

Inputs	ONU power management states			
	(1) ActiveHeld	**(2) ActiveFree**	**(3) Aware**	**(4) LowPower**
FWI	*	→ (1)	→ (1) /SR(Awake)	→ (1) /SR(Awake)
SA (OFF)	*	→ (1)	→ (1) /SR(Awake)	→ (1) /SR(Awake)
SA (ON)	→ (2) Upon Thold expiration (Note)	*	*	*
LWI	*	*	→ (1) /SR(Awake)	→ (1) /SR(Awake)
LSI		→ (3) /SR(WSleep)	*	*
Tlowpower expiration				→ (3)
Taware expiration			→ (4)	

* Indicates a self-transition.

A shaded cell means that the input is not applicable in the given state.

NOTE – An ONU remains in the ActiveHeld state for at least Ihold upon entry into that state regardless of the SA message parameter value indicated by the OLT. The minimum sojourn in the ActiveHeld state is controlled by timer Thold that is initiated to Ihold upon ONU's entry into the ActiveHeld state. When Thold expires, the ONU executes a transition into to the ActiveFree state if the latched value of SA message parameter is ON or as soon as SA (ON) message is received.

C.16.1.3.2 OLT state machine

The OLT power management states along with their corresponding semantic description are listed in Table C.16.5. The set of input events is represented in Table C.16.6. The state transition diagram is illustrated in Figure C.16.2. The normative specification of the state transitions and outputs is given in Table C.16.7.

Exhibit 1010
IPR2024-00899, USPN 9,806,892
235 of 290

Table C.16.5 – OLT power management states

State	Semantics
AwakeForced	The OLT provides normal allocations to ONU_i, forwards downstream traffic and expects a response to every bandwidth grant. The OLT declares the LOB_i defect on detection of the specified number of missed allocations. On transition into this state, the OLT sends a Sleep_Allow (OFF) PLOAM message, thus revoking its permission to the ONU to enter any low power mode.
AwakeFree	The OLT provides normal allocations to the ONU, forwards downstream traffic and is ready to accept a power management transition indication from the ONU. On transition into this state, the OLT sends a Sleep_Allow (ON) PLOAM message, thus granting the ONU a permission to enter any negotiated low power mode at its own discretion. The OLT expects a response to every bandwidth grant, and in case of missed allocation transitions to the AwakeForced state, where LOB_i condition can be eventually declared. There are two stable state combinations involving the AwakeFree state of the OLT state machine: the ONU state machine can be either in the ActiveFree state or in the ActiveHeld state.
LowPowerSleep LowPowerDoze LowPowerWatch	The OLT supports the ONU in a low power mode. The OLT provides normal allocations to the ONU but expects only intermittent responses from the ONU to bandwidth grants. In the LowPowerDoze state, the OLT forwards the downstream traffic; in the LowePowerSleep and LowPowerWatch states, the OLT may buffer the downstream traffic. If timer Ter_i expires before the OLT receives a burst from ONUi, the OLT recognizes a handshake violation and transitions to the AwakeForced state.
AlertedSleep AlertedDoze AlertedWatch	The OLT attempts to wake up the ONU. Having sent Sleep_Allow (OFF) message on transition to the state, the OLT sets the FWI bit in every allocation to the ONU along with the PLOAMu flag. The OLT forwards, discards or buffers downstream traffic for the ONU, just as it did during the immediately preceding LowPowerDoze/Sleep/Watch state. The OLT transitions to the AwakeForced state, if it receives a burst from the ONU that includes a Sleep_Request (Awake) PLOAM message, or if timer Talerted expires.

Table C.16.6 – OLT state machine inputs

Input categories	Input	Semantics
PLOAM events	Sleep_Request(Doze)	The ONU informs the OLT of its intent to exercise the doze power management mode.
	Sleep_Request(Sleep)	The ONU informs the OLT of its intent to exercise the cyclic sleep power management mode.
	Sleep_Request (WSleep)	The ONU informs the OLT of its intent to exercise the watchful sleep power management mode.
	Sleep_Request (Awake)	The ONU informs the OLT of its intent to remain at full power.

Exhibit 1010
IPR2024-00899, USPN 9,806,892
236 of 290

Table C.16.6 – OLT state machine inputs

Input categories	Input	Semantics
Timer events	Ter_i expiration	The event occurs only in the LowPowerDoze/ Sleep/Watch states indicating the violation by the ONU of the provisioned low power timing parameters.
	Talerted expiration	The event occurs only in AlertedDoze/Sleep/Watch states indicating the ONU's failure to wake up upon OLT's demand.
Local events	Local wake-up indication, OLT-LWI	Local wake-up indication and its inverse indicate, respectively, the presence and the absence of a local stimulus to maintain the ONU at full power.
Interface events	Allocation Miss	No valid optical signal from ONU within a group of contiguous allocations to that ONU.
NOTE – The OLT-LWI event and its inverse are conceptually derived from the OLT's binary stimulus status level and correspond to the stimulus level change. The specific criteria for the local stimulus definition remain out of scope of this Recommendation.		

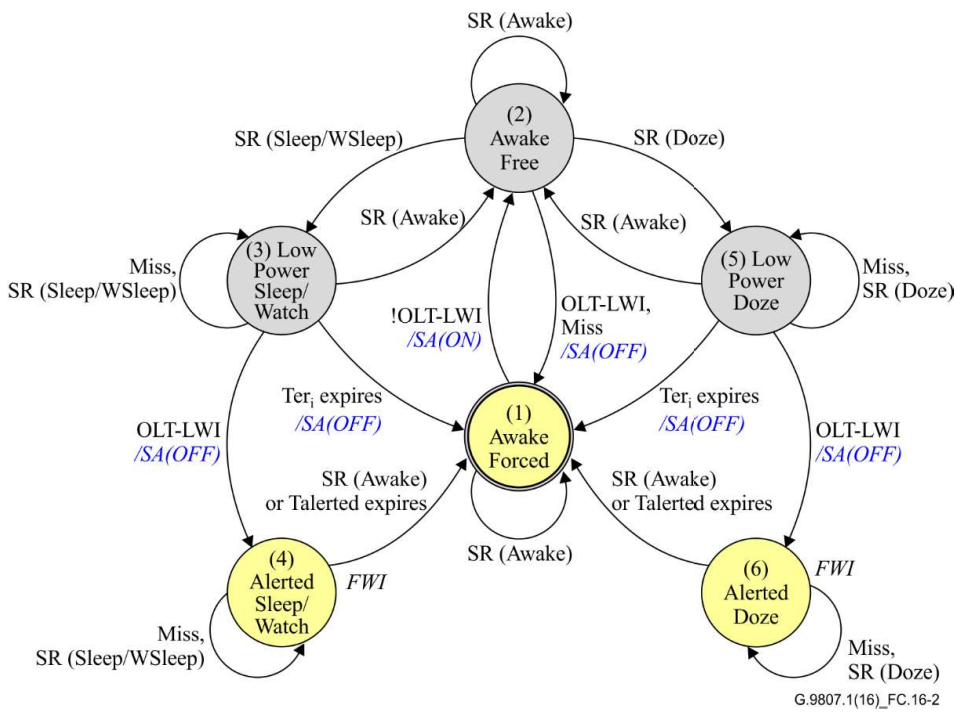

Figure C.16.2 – OLT state transition diagram (initial state circled)

NOTE 1 – The vertices on the state diagram graph can be qualified as either "tense" or "relaxed" forming the yellow and grey subgraphs, respectively. As a rule, an output PLOAM message is generated only on a state transition that crosses the subgraph boundary.

NOTE 2 – The use of the left-hand-side branch of the state machine depends on the power mode negotiations between the OLT and the ONU. If the Doze or Doze and Cyclic Sleep modes are selected, the SR(Sleep) condition applies, and the states are named (3) LowPowerSleep and (4) AlertedSleep. If the Watchful sleep mode is selected, the SR(WSleep) condition applies, and the states are named (3) LowPowerWatch and (4) AlertedWatch. However, all the transitions and state semantics remain exactly the same, which is the reason to combine them graphically.

Exhibit 1010
IPR2024-00899, USPN 9,806,892
237 of 290

Table 16.7 – OLT state transition and output table

Inputs	OLT power management states					
	(1) AwakeForced	(2) AwakeFree	(3) LowPower Sleep/Watch	(4) Alerted Sleep/Watch/ FWI	(5) LowPowerDoze	(6) AlertedDoze/ FWI
SR (Awake)	*	*	→ (2)	→ (1)	→ (2)	→ (1)
SR (Sleep/WSleep)	* /SA(OFF) (Note 1)	→ (3)	*	*	→ (1) /SA(OFF) (Note 2)	→ (1) /SA(OFF) (Note 2)
SR (Doze)	* /SA(OFF) (Note 1)	→ (5)	→ (1) /SA(OFF) (Note 2)	→ (1) /SA(OFF) (Note 2)	*	*
Allocation miss	*	→ (1) /SA(OFF)	*	*	*	*
OLT-LWI ON	*	→ (1) /SA(OFF)	→ (4) /SA(OFF)	*	→ (6) /SA(OFF)	*
OLT-LWI OFF	→ (2) /SA(ON)	*	*	* (Note 3)	*	* (Note 3)
Talerted expiration				→ (1)		→ (1)
Ter_i expiration			→ (1) /SA(OFF)		→ (1) /SA(OFF)	

* Indicates a self-transition.

A shaded cell means that the input is not applicable in the given state.

NOTE 1 – An exception from the subgraph rule; an output may help to stabilize the state machine in case the condition is caused by a lost SA(OFF) message. The output is not shown on the FSM diagram.

NOTE 2 – Direct transitions between Doze mode and Cyclic Sleep mode are disallowed. When the OLT receives a request to execute such a transition, it attempts to regain state machine synchronization by waking up the ONU. The transitions are not shown on the diagram for the sake of compactness.

NOTE 3 – This is a situation when the OLT initiates a wake-up, but the OLT-LWI is cleared before the ONU is awoken. In this case, the OLT, instead of cancelling the wake-up process and attempting to immediately revert to a power saving, insists on waking the ONU up with the intent to re-enter a power saving state via states AwakeForced and AwakeFree.

C.16.1.4 Management transactions in the LowPower state

The ONU can receive and act on downstream management traffic at any of the three channels described in clause C.6.1.4, except when it is in its LowPower state and has its receiver switched off. The OLT is responsible for understanding when the ONU can be expected to receive downstream management traffic, or to deal with the possibility that the ONU does not receive such traffic.

If the ONU receives embedded OAM commands such as DBRu or PLOAMu when it cannot respond immediately, i.e., when it is in a LowPower state but has its receiver powered on, it ignores the commands. It is the OLT's responsibility to allow for extra response delays if it sends PLOAM or OMCI commands to an ONU that may be incapable of responding within the normal time.

It is prudent for the OLT to force the ONU awake before conducting management transactions.

Exhibit 1010
IPR2024-00899, USPN 9,806,892
238 of 290

The OLT is permitted to send unidirectional management transmissions at any time, including Profile, Deactivate_ONU-ID, Disable_Serial_Number and Sleep_Allow PLOAM messages. The OLT must be prepared for the possibility that a sleeping ONU does not receive the transmission.

For the purposes of this clause, an ONU becomes subject to power management only when it is in state O5. When the OLT understands that the ONU is not in state O5, for example, because the ONU is only newly discovered or has not yet registered, the normal ranging and assignment transactions occur without regard to the power saving model.

NOTE – It is possible that an ONU in states O1 or O2 might also wish to sleep, as a way of conserving power while waiting for turn-up. This would involve a much simpler state model, and would require no exchange of information between the OLT and the ONU, externally visible merely as delayed discovery. Such a possibility is beyond the scope of this Recommendation.

C.16.1.5 Power saving by channel selection

Not applicable to XGS-PON.

C.16.2 PtP WDM power management

Not applicable to XGS-PON.

C.17 Channel management

Not applicable to XGS-PON.

C.18 XGS-PON system protection

C.18.1 OLT coordination in type B XGS-PON protection

In a basic type B PON protection configuration [b-ITU-T G.Suppl.51] as shown in Figure C.18.1, a 2:N optical splitter is used (instead of the more conventional 1:N), which has two input/output ports on the OLT side, from which two feeder fibres connect the splitter to two different OLT ports. A single parented configuration has both ports in the same chassis (ideally in separate linecards) and have the possibility to share the same SNI. A dual parented solution has both ports in different chassis (ideally in geographically remote locations).

This protection configuration can restore service traffic in case of failure of the PON feeder fibre, and the OLT PON port or card (if ports in different linecards). In the dual parented configuration, service traffic can also be restored in case of failure of the OLT chassis or the entire building where the OLT is located (if chassis in different buildings). This protection is activated only when a fault affects a large number of customers, i.e., all customers in a PON as a minimum.

Exhibit 1010
IPR2024-00899, USPN 9,806,892
239 of 290

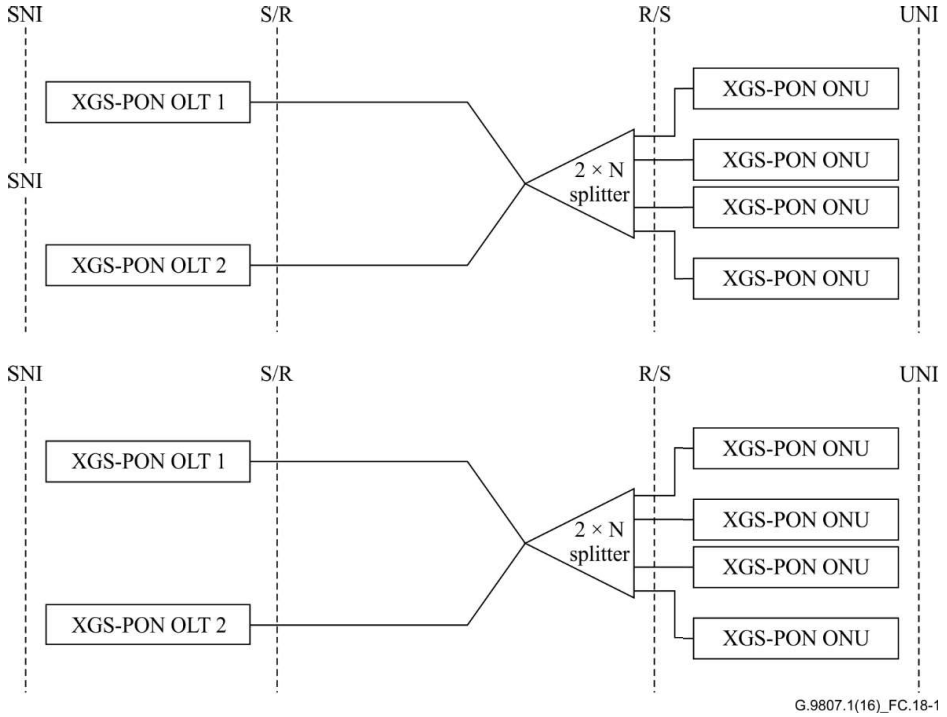

Figure C.18.1 –Type B XGS-PON protection configuration

The two associated OLT ports need to coordinate their status in order to avoid transmitting simultaneously at any time. To that goal, each OLT port needs to run a state machine (which also supports the silent start behaviour).

There are two sets of states, one set belonging to the "Standby" role, where the OLT port has its transmitter turned off ("Initialisation", "Protecting", and "LOS-P" states), and another set belonging to the "Active" role ("Pre-Working", "Working", and "LOS-W" states), where the OLT port has its transmitter on and is in control of the ONUs. In order to avoid flapping between roles, after moving to the "Pre-Working" state, the OLT port locks down its active role for a pre-defined period of time "T_{hold}".

The Type B protection mechanism ensures that as long as at least one OLT port is available, exactly one OLT port assumes the "Active" role, transmitting optical signals in the downstream direction and providing service to the ONUs. Meanwhile, the other OLT port, if available, assumes the "Standby" role, monitoring the upstream transmissions and is ready to take over if a failure prevents the peer OLT port from continuing in the "Active" role. Table C.18.1 describes each state in more detail.

Table C.18.1 – OLT port states for coordinating in a Type B PON protection configuration

State	Semantics
Initialisation (1) [Tx: OFF; Rx: ON]	The OLT port is provisioned as part of a Type B protection configuration. It starts T_{sstart} timer. The optical transmitter is turned off.
Pre-Protecting (2)	*Not used. This state is only used when ICTP is active in a Multi-Wavelength PON (cf. [ITU-T G.989.3])*

Exhibit 1010
IPR2024-00899, USPN 9,806,892
240 of 290

Table C.18.1 – OLT port states for coordinating in a Type B PON protection configuration

State	Semantics
Protecting (3) [Tx: OFF; Rx: ON]	The OLT port has assumed the Standby role, while the peer OLT port controls the ONUs in the PON. The OLT port is not expected to support execution of the per-ONU state machines. The OLT port may obtain service information from the Active OLT port.
LOS-P (4) [Tx: OFF; Rx: ON]	The OLT port in the Standby role has detected a LOS condition. The OLT port starts T_{pfail} timer. The optical transmitter is turned off. The OLT port is not expected to support execution of the per-ONU state machines.
Pre-Working (5) [Tx & Rx: ON]	The OLT port has assumed the Active role, turned its transmitter on and commenced downstream transmission, looking to confirm that its signal is received by the ONUs. The T_{hold} timer is started to guarantee a minimum time in the active role covering states (5) through to (7). The T_{ract} timer is started to limit the time the OLT port awaits for its Active role to be confirmed by a proper upstream transmission.
Working (6) [Tx & Rx: ON]	The OLT port in the Active role has received a confirmation through a proper upstream transmission that its signal is received and processed. The OLT port controls the PON.
LOS-W (7) [Tx & Rx: ON]	The OLT port in the Working state (5) has detected a LOS condition, starts T_{wfail} timer, while continuing to transmit downstream. Unless the LOS condition is cleared, the OLT port remains in the LOS-W state until expiration of both T_{wfail} and T_{hold} timers.
Helpme (8)	*Not used. This state is only used when ICTP is active in a Multi-Wavelength PON (cf. [ITU-T G.989.3])*
COMM-FAIL (9) [Tx: OFF; Rx: ON]	The OLT port was not able to (re-)activate any ONU in the PON for a period of at least T_{ract}. The most likely reason being the loss of communication with all ONUs due to a fibre cut or failure of the OLT port receiver. The OLT port has thus moved to this State, where it will raise an alarm to the EMS.
EQPT-FAIL (10) [Tx & Rx: OFF]	The OLT port is not transmitting or receiving, so it is not participating in the protected PON.

There are two sets of states, one set belonging to the "Standby" role, where the OLT port has its transmitter turned off ("Initialisation", "Protecting", and "LOS-P" states), and another set belonging to the "Active" role ("Pre-Working", "Working", and "LOS-W" states), where the OLT port has its transmitter on and is in control of the ONUs. In order to avoid flapping between roles, after moving to the "Pre-Working" state, the OLT port locks down its active role for a pre-defined period of time "T_{hold}". Figure C.18.2 illustrates the complete state machine that each OLT port needs to run in order to define its behaviour in a type B protected PON.

Exhibit 1010
IPR2024-00899, USPN 9,806,892
241 of 290

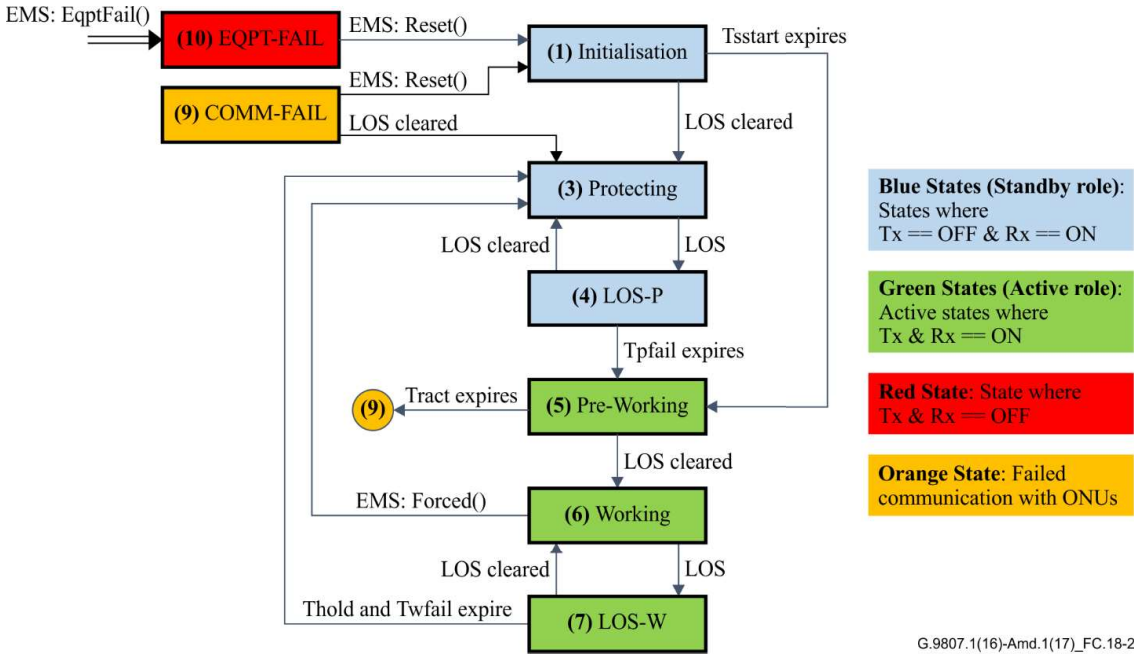

Figure C.18.2 – OLT port state machine diagram

Three commands from the element manager system (EMS) are involved in the OLT port state transition. EMS:EqptFail () is issued when the operational support system (OSS) detects equipment failure. This command drives the OLT port to enter the "EQPT-FAIL" state. EMS: Reset () is issued when the OSS requires the OLT port to be provisioned as part of a Type B protection configuration. It moves the OLT port to enter the Initialisation state. EMS: Forced () is issued when the OSS requires the OLT port leaves the Working state and enters the Protecting state.

Table C.18.2 describes the timers used in the state machine. All the timers used in each state are only meaningful while the OLT port stays in that state. Once the port transits to a different state all timers are cleared.

Table C.18.2 – Timers used in each OLT port state machine for a Type B PON protection

Timer	Full name	State	Semantics
T_{sstart}	Silent start timer	Initialisation (1)	The duration of time a re-initialised OLT port waits before assuming the Active role by default. The timer is started upon transition into the Initialisation state. If an upstream transmission is detected, the timer is stopped. The expiration of the timer drives its transition into the Pre-Working state (5).
T_{pfail}	Protecting state failure timer	LOS-P (4)	The elapsed time between LOS declaration in the Protecting state and the decision to execute protection switching. The timer is started upon entry into the LOS-P state (4) after the LOS declaration in the Protecting state (3). The expiration of the timer drives a transition into the Pre-Working state (5).

Exhibit 1010
IPR2024-00899, USPN 9,806,892
242 of 290

Table C.18.2 – Timers used in each OLT port state machine for a Type B PON protection

Timer	Full name	State	Semantics
T_{ract}	Receiver active confirmation timer	Pre-Working (5)	The maximum time an OLT port attempts to attain control over the ONUs. The timer is started upon entry into the Pre-Working state (5) and is stopped once any upstream transmission consistent with the bandwidth map is received. The expiration of the timer indicates a possible fibre cut or a silent transceiver failure. An alarm must be issued, and the transceiver moves to COMM-FAIL state (9)
T_{hold}	Active states holding timer	Pre-Working (5), Working (6), LOS-W (7)	The duration of the time interval for which a lock is imposed on an OLT port that has just entered the Active states (5), (6), and (7), through the Pre-Working state (5). The timer is started upon entry into the Pre-Working state (5) and is run until expiration while in the active states. Transition out of the active states is not allowed until the timer has expired or an instruction is received such as EMS:Reset(), EMS:Forced(), or EMS:EqptFail().
T_{wfail}	Working state failure timer	LOS-W (7)	The timer Twfail is started upon entry into the LOS-W state (7) and it is the elapsed time before the OLT port transits to the Protecting state (3), provided the timer T_{hold} has also expired.

Although the timers must be configurable by the system, it is necessary that the values of the timers T_{pfail}, T_{hold}, and T_{wfail}, obey the following relation:

$$T_{pfail} > T_{hold} > T_{wfail}$$

Table C.18.3 describes the state transitions.

Table C.18.3 – OLT port state transitions

EVENTS	STATES							
	(1) Initialisation	(3) Protecting	(4) LOS-P	(5) Pre-Working	(6) Working	(7) LOS-W	(9) COMM-FAIL	(10) EQPT-FAIL
LOS		→ (4) Start Tpfail			(7) Start T_{wfail}			
LOS cleared	Stop T_{sstart} →(3)		Stop T_{pfail} → (3)	Stop T_{ract} → (6)		Stop T_{wfail} → (6)	→ (3)	
T_{sstart} expired	(5) Start Thold Start Tract							
T_{pfail} expired			→ (5) Start Thold					

Exhibit 1010
IPR2024-00899, USPN 9,806,892
243 of 290

Table C.18.3 – OLT port state transitions

EVENTS	STATES							
	(1) Initialisation	(3) Protecting	(4) LOS-P	(5) Pre-Working	(6) Working	(7) LOS-W	(9) COMM-FAIL	(10) EQPT-FAIL
			Start Tract					
T_{hold} & T_{wfail} expired						→ (3)		
T_{ract} expired				Stop T_{hold} Stop T_{ract} → (9)				
EMS:Reset()	Reset T_{sstart}	→ (1) Start Tsstart	Stop T_{pfail} → (1) Start T_{sstart}	Stop T_{hold} Stop T_{ract} → (1) Start T_{sstart}	Stop T_{hold} → (1) Start T_{sstart}	Stop T_{hold} Stop T_{wfail} → (1) Start T_{sstart}	→ (1) Start Tsstart	→ (1) Start Tsstart
EMS:Forced()					Stop T_{hold} → (3)			
EMS:EqptFail()	Stop T_{sstart} → (10)	→ (10)	Stop T_{pfail} → (10)	Stop T_{hold} Stop T_{ract} → (10)	Stop T_{hold} → (10)	Stop T_{hold} Stop T_{wfail} → (10)	→ (10)	

During the Initialization state, the ONU configuration must be replicated between the two OLTs. This can be simply done using the element management system or the ICTP protocol if available. More information can be found in [b-ITU-T G-Sup.51] and [b-ITU-T G-Sup.54].

The ONU initial service configuration as well as any changes should also be replicated.

C.18.2 OLT state coordination using inter-channel-termination protocol

Although the timers should always be in place regardless of the OLT configurations, the ICTP [b-BBF TR-352] could be used to perform a number of roles.

– Exchange ONU TC configuration
– Exchange ONU service configuration
– Exchange/confirm OLT state

The use of ICTP may be beneficial in order to expedite the protection switching, and resolve issues in case of OLT failures.

C.19 Rogue behaviour and its mitigation

This clause is largely concerned with rogue behaviour models for XGS-PON coexistence with ITU-T G.984 and ITU-T G.987 ONUs. This clause does not specify any interoperation between an OLT and an ONU. For the examples of specific mitigation techniques, see [b-ITU-T G-Sup.49].

Exhibit 1010
IPR2024-00899, USPN 9,806,892
244 of 290

C.19.1 Rogue ONU behaviour model in XGS-PON

XGS-PON rogue ONU mitigation is intended to protect against the following rogue behaviour model:

- An ONU transmits in the wrong time slot in the upstream and interferes with other ONU's upstream transmission. Root cause may be various, referring to [b-ITU-T G-Sup.49]. The OLT detects LOB_i in the upstream transmission.

C.19.2 Rogue ONU behaviour model for PtP WDM

Not applicable to XGS-PON.

C.19.3 Behaviour model when coexisting with ITU-T G.984, ITU-T G.987 and ITU-T G.989 ONUs

C.19.3.1 Silent start at the ONU

In a coexistence scenario, rogue behaviour might be caused by the ONUs from a PON system not controlled by the OLT. If such ONUs are able to transmit without being granted permission from an OLT, they may cause rogue events even though they are not faulty.

C.19.3.2 Silent start at the OLT port

Transmissions by an OLT might adversely affect ONUs of its own or a coexisting system.

It is recommended that upon new OLT provisioning and any re-initialization, an OLT implements "silent start" behaviour.

The silent start behaviour follows the state machine of Figure C.18.2 and consists of remaining silent and in a listen only mode for a duration of at least Tfail (Table C.18.1). If during this time the OLT receives an incoming signal, it notifies the management system and remains silent awaiting further instruction. Otherwise, the OLT may proceed to the working state.

C.19.3.3 OLT port detection of rogue devices

In a coexistence scenario, rogue behaviour might be caused by ONUs from a PON system not controlled by the OLT. Isolation and mitigation of the rogue behaviour may be difficult or impossible.

C.19.4 Protection from noise and alien ONUs

An OLT that receives a signal during a quiet window shall consider that signal valid only if the received PSBu structure is valid. If, during a quiet window, an OLT receives a signal that does not contain a valid PSBu pattern, it may try to adjust its clock and data recovery to isolate the troublesome signal, or report an unexpected light detection event.

C.19.5 Troublesome ONU presence detection enabled through idle window

An OLT may create an idle window on a PON system by temporarily withholding all allocations, including regular data PLOAM grants, ranging grants and serial number grants.

By opening an idle window, the OLT is able to cyclically check the absence of most frequent troublesome transmitters wrongly connected to the PON fibre terminations: ONU point to point modems that don't implement ONU silent start; since they don't understand the downstream protocol, they generally transmit unconditionally, some of them just testing that there is incoming optical power. Since the optical windows might overlap in some future, such a feature will enhance resistance of XGS-PON.

The idle window here corresponds to an upstream listening period by the OLT within its receiving optical wavelength window, when no Alloc-ID is given to any ONU or during an idle window opened when no broadcast PLOAM is sent downstream that would enable regular ONU to reply with a Serial_Number_ONU message.

Exhibit 1010
IPR2024-00899, USPN 9,806,892
245 of 290

This enables the OLT to recognize any upstream power received as an unexpected transmitter mis-connected to the PON and prompt the operator to undertake a corrective action.

Exhibit 1010
IPR2024-00899, USPN 9,806,892
246 of 290

Annex C.A

Hybrid error control (HEC) decoding and scrambler sequence codes

(This annex forms an integral part of this Recommendation.)

C.A.1 HEC decoding

The hybrid error correction (HEC) structure is shown in Figure C.A.1. Note that the HEC is used in XGS-PON in several places. In the FS header, it is applied to a protected field of 19 bits, producing a total structure of 32 bits. In the BWmap and XGEM applications, it is applied to a protected field of 51 bits, producing a total structure of 64 bits. For the purposes of calculating the HEC, the 19-bit protected field is pre-pended with 32 zero bits (that are not transmitted).

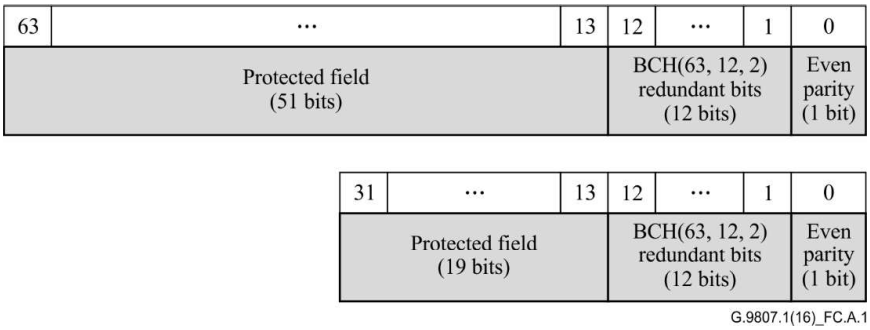

Figure C.A.1 – Hybrid error correction structure, showing details of the 13-bit header error control field

The HEC is a double error correcting, triple error detecting code. It is composed of two parts. The first part is a BCH(63, 12, 2) code. The generator polynomial for this code is $x^{12} + x^{10} + x^8 + x^5 + x^4 + x^3 + 1$. This code is applied to the protected field (which is 51 bits), so that the 63-bit result is divisible by the generator polynomial. The properties of this code are such that every single error and every double error has a unique 12-bit syndrome. Thus, all such errors can be corrected. Also, triple errors can produce syndromes that match double error syndromes or illegal codes, but there is no triple error syndrome that matches a single error syndrome. It is this last property that permits the use of a single parity bit to detect and exclude triple errors.

The table of error syndromes for this code is given in Table C.A.1. Note that bit position 63 is the first bit of the protected 51 bit field, and bit position 1 is the next to last bit of the HEC. Position 0 (the last bit) is reserved for the even parity bit. For the short structure case, the first bit of the protected 19-bit field is in bit position 31.

Table C.A.1 – HEC error syndromes

Error bit position	Syndrome (base 16)	Error bit position	Syndrome (base 16)	Error bit position	Syndrome (base 16)	Error bit position	Syndrome (base 16)
63	A9C	47	A09	31	B04	15	1DD
62	54E	46	F98	30	582	14	A72
61	2A7	45	7CC	29	2C1	13	539
60	BCF	44	3E6	28	BFC	12	800
59	F7B	43	1F3	27	5FE	11	400
58	D21	42	A65	26	2FF	10	200

Exhibit 1010
IPR2024-00899, USPN 9,806,892
247 of 290

Table C.A.1 – HEC error syndromes

Error bit position	Syndrome (base 16)	Error bit position	Syndrome (base 16)	Error bit position	Syndrome (base 16)	Error bit position	Syndrome (base 16)
57	C0C	41	FAE	25	BE3	9	100
56	606	40	7D7	24	F6D	8	080
55	303	39	977	23	D2A	7	040
54	B1D	38	E27	22	695	6	020
53	F12	37	D8F	21	9D6	5	010
52	789	36	C5B	20	4EB	4	008
51	958	35	CB1	19	8E9	3	004
50	4AC	34	CC4	18	EE8	2	002
49	256	33	662	17	774	1	001
48	12B	32	331	16	3BA	0	N/A (parity)

Because there are 63 unique single error syndromes, there are 1 953 unique double error syndromes. As there are 4 095 possible syndromes in the 12-bit space, this leaves 2 079 codes that are not used. These unused codes are considered illegal, in that they can only result from three or more errors.

The second part of the HEC is a simple parity bit. This parity bit is set so that the total number of ones in the protected field+HEC is an even number. This parity then indicates if an odd number of errors have occurred in the header. Note that the BCH code does not include the parity bit in its calculations, but the parity bit does include the BCH code in its calculation.

A few examples of valid 64-bit HEC protected structures are given in Table C.A.2. These can be used to test implementations of the encoding and decoding processes.

Table C.A.2 – Valid 64-bit HEC-protected structures

58472D504F4E0A55	204B616E692C1748	69726F616B690C8B
2077617320701574	204A6F6520530247	204D756B61690A22
726F64756365128E	6D6974682C201A23	2C20446176651A73
64207468616E1A18	5269636861720A6E	20486F6F642C0F79
6B7320746F201705	6420476F6F64176E	20576569204C04F2
416E6E6120430915	736F6E2C20440F00	696E2C20616E05E9
75692C204661159F	656E6973204B1780	64206F6620631C47
6272696365200372	686F74696D731F44	6F757273652C0405
426F75726761033D	6B792C205975155F	204672616E6B0601
72742C204A751760	616E7169752005E8	20456666656E1897
6E2D6963686908A8	4C756F2C204817D2	6265726765720486

A few examples of valid 32-bit HEC-protected structures are given in Table C.A.3.

Exhibit 1010
IPR2024-00899, USPN 9,806,892
248 of 290

Table C.A.3 – Valid 32-bit HEC-protected structures

58470E66	696E07CC	6B201FCB
2D5011A6	20731B4E	4861190A
4F4E03DA	7069115E	6A6411EA
20680AD7	746518A3	75631541
6170070D	206F1E9B	7A650166
70651D5D	66200F13	6E691F63
6E651360	4D61022E	612E011B
642018D4	72650A9A	2020162F

The HEC can be decoded at the receiver by calculating the syndrome and the parity at the receiver, and then applying the logic described below.

Table C.A.4 represents the HEC verification results, showing the maximum likelihood combination of underlying events and the usability of the header (after applicable error-correction) for each combination of the BCH block code decoding and parity check outcomes.

Table C.A.4 – HEC verification (maximum likelihood event and usability of the field)

BCH block decoding outcome	**Parity check outcome**	
	Pass	**Fail**
No errors	Error free/ Protected field OK	Parity bit error/ Protected field OK
Single error	Single block code error + parity error/ Protected field correctable with BCH	Single block code error/ Protected field correctable with BCH
Double error	Double block code error/ Protected field correctable with BCH	Triple block code error/ Protected field uncorrectable
Uncorrectable	Multiple bit errors/ Protected field uncorrectable	Multiple bit errors/ Protected field uncorrectable

C.A.2 Scrambler sequence

The first 256 bits from the scrambler sequence is given in Table C.A.5 in binary and hexadecimal representations (this assumes that the superframe counter is equal to zero).

Exhibit 1010
IPR2024-00899, USPN 9,806,892
249 of 290

Table C.A.5 – Scrambler sequence example

00000	00000	00000	00000	00000	00000	00000	00000	00000	00000	00000	00000
00011	1111F	1100C	00000	00000	00000	00000	00000	00000	00000	00113	1111F
10008	00000	00000	01117	1111F	00000	00000	00000	01117	1111F	00000	00000
00000	00000	00000	00000	00000	00011	00000	00102	00000	00000	00011	1111F
1100C	00000	00000	00102	00000	01004	00000	00000	01117	1111F	00000	00000
00000	00113	1111F	10008								

Exhibit 1010
IPR2024-00899, USPN 9,806,892
250 of 290

Annex C.B

Forward error-correction using shortened Reed-Solomon codes

(This annex forms an integral part of this Recommendation.)

This annex is the same as Annex B of [ITU-T G.987.3].

Exhibit 1010
IPR2024-00899, USPN 9,806,892
251 of 290

Annex C.C

Secure mutual authentication via OMCI

(This annex forms an integral part of this Recommendation.)

This annex is the same as Annex C of [ITU-T G.987.3].

Exhibit 1010
IPR2024-00899, USPN 9,806,892
252 of 290

Annex C.D

Secure mutual authentication using IEEE 802.1X

(This annex forms an integral part of this Recommendation.)

This annex is the same as Annex D of [ITU-T G.987.3].

Exhibit 1010
IPR2024-00899, USPN 9,806,892
253 of 290

Annex C.E

Auxiliary management and control channel

(This annex forms an integral part of this Recommendation.)

Not applicable to XGS-PON.

Exhibit 1010
IPR2024-00899, USPN 9,806,892
254 of 290

Annex C.F

Tuning sequences

(This annex forms an integral part of this Recommendation.)

Not applicable to XGS-PON.

Exhibit 1010
IPR2024-00899, USPN 9,806,892
255 of 290

Annex C.G

Transcoded framing with FEC and OAM for PtP WDM AMCC TC

(This annex forms an integral part of this Recommendation.)

Not applicable to XGS-PON.

Exhibit 1010
IPR2024-00899, USPN 9,806,892
256 of 290

Appendix C.I

Downstream line data pattern conditioning

(This appendix does not form an integral part of this Recommendation.)

This appendix is the same as Appendix I of [ITU-T G.987.3].

Exhibit 1010
IPR2024-00899, USPN 9,806,892
257 of 290

Appendix C.II

Time of day derivation and error analysis

(This appendix does not form an integral part of this Recommendation.)

This appendix provides the mathematical details for the time of day (ToD) transfer model derivation and error analysis. It is based on the notation of clause C.13.2.1. In addition,

$\boldsymbol{T}_{\text{up}}$ is the upstream propagation delay at the XGS-PON upstream wavelength, and

$\boldsymbol{T}_{\text{dn}}$ is the downstream propagation delay at the XGS-PON downstream wavelength.

By constructions (see Figure C.13.4 and Figure C.13.7 with accompanying text), the upstream PHY frame offset can be represented using the parameters of ONU$_i$ as expressed in Equation C.II-1:

$$\begin{aligned} Teqd &= T_{dn,i} + RspTime_i + EqD_i + T_{up,i} \\ &= T_{dn,i}\frac{n_{up}+n_{dn}}{n_{dn}} + RspTime_i + EqD_i \end{aligned} \tag{C.II-1}$$

Then by expressing $\boldsymbol{T}_{\text{dn,i}}$ from equation (C.II-1) would result Equation C.II-2 as:

$$T_{dn,i} = \left(Teqd - RspTime_i - EqD_i\right)\frac{n_{dn}}{n_{dn}+n_{dn}}, \tag{C.II-2}$$

substituting this expression into the formula for the receive instance of PHY frame $\boldsymbol{N}$ (see C.II-3),

$$Trecv_{N,i} = Tsend_{N,i} + T_{dn,i} \tag{C.II-3}$$

and regrouping appropriately, one can obtain the representation of the actual ToD instance when TC frame $\boldsymbol{N}$ is delivered to ONU$_{\boldsymbol{i}}$ (see C.II-4):

$$Trecv_{N,i} = Tsend_N + Teqd\left[\frac{n_{dn}}{n_{up}+n_{dn}}\right]_{OLT} - \left(EqD_i + RspTime_i\right)\left[\frac{n_{dn}}{n_{up}+n_{dn}}\right]_{ONU} \tag{C.II-4}$$

where the positive additive term can be computed by the OLT and communicated downstream, while the negative additive term can be computed by the ONU.

Note that for the model to hold, the measurements of $\boldsymbol{T}$**eqd**, $\boldsymbol{T}$**send**$_{\boldsymbol{N,i}}$, and $\boldsymbol{T}$**recv**$_{\boldsymbol{N,i}}$ should be consistently referenced to the fibre interface at the OLT and ONU, respectively.

Note further that in addition to the ONU response time shown here, there are also internal delays that need to be compensated in both the OLT and ONU. These internal delay compensations directly affect the delivered time accuracy, so the resultant error is quite easy to understand. These errors are not considered further in this treatment.

It should be noted that the refractive index factors are used in calculations on both sides of the PON, and their values could differ depending on the implementation. To eliminate the error caused by inconsistent values, it is recommended that both sides use the common value estimated below.

The resulting timing error caused by variations in the index factor is then given by Equation C.II-5.

$$Terror_{N,i} = Teqd\delta\left[\frac{n_{dn}}{n_{up}+n_{dn}}\right]_{OLT} - \left(EqD_i + RspTime_i\right)\delta\left[\frac{n_{dn}}{n_{up}+n_{dn}}\right]_{ONU} \tag{C.II-5}$$

This equation indicates that the error due to the OLT's refractive index factor variation is fixed (over all ONUs), and it is indeed at the maximum value of $\boldsymbol{T}$**eqd**, which is typically 250 microseconds. The error due to the ONU's index factor variation depends on the EqD and the response time of that ONU;

Exhibit 1010
IPR2024-00899, USPN 9,806,892
258 of 290

therefore, nearby ONUs will have a larger error caused by inaccuracies in the ONU's index factor (a rather counter-intuitive result). It should be noted, however, that these errors may cancel out to some degree. To assure this cancelation, it is recommended that the calculation use the common value estimated below.

Looking deeper into the index factor, it is noticed that the group refractive index at downstream wavelength with ***n*** and the difference between group indices at upstream wavelength and downstream wavelength with **Δ*n***, rewriting results in expression C.II-6.

$$\frac{n_{1577}}{n_{1270}+n_{1577}} = \frac{n_{1577}}{2n_{1577}+(n_{1270}-n_{1577})} = \frac{n}{2n+\Delta n} \approx \frac{2n^2-n\Delta n}{4n^2} = \frac{1}{2}-\frac{\Delta n}{4n}. \qquad \text{(C.II-6)}$$

One can consider the effect of variations of ***n*** and **Δ*n*** by taking partial derivatives with respect to these variables. It then can be shown that (see C.11-7):

$$\frac{\partial}{\partial n}\left(\frac{1}{2}-\frac{\Delta n}{4n}\right) = +\frac{\Delta n}{4n^2} \quad \text{and} \quad \frac{\partial}{\partial \Delta n}\left(\frac{1}{2}-\frac{\Delta n}{4n}\right) = -\frac{1}{4n}. \qquad \text{(C.II-7)}$$

It is important to note that ***n*** is about three orders of magnitude larger than **Δ*n***. Therefore, the first expression is very much smaller than the second one, and can be neglected. The second expression states that small changes in **Δ*n*** will be translated into small changes of the index factor in the proportion 1/4***n***.

So, **Δ*n*** (the "index difference") must be calculated and its variations should be considered.

Calculation of the index difference

The wavelength-dependent difference in refractive index Δ***n*** depends on the fibre properties and on the actual wavelengths that are involved (as real PON transmitters may operate over a range of wavelengths). An accurate representation of the index of [ITU-T G.652] fibre is difficult to obtain. Typical spot values for the index at 1 310 and 1 550 nm are available, but these do not have the accuracy that is needed. The dispersion of fibres is given for certain windows (the 1 310 window, for example), but these formulations are not accurate when extrapolated beyond their window. Nevertheless, it is desirable to proceed with the standardized dispersion factor, and suffer the potential inaccuracy that such a generalization imposes. If a better function can be determined, then the analysis can be applied to that.

The dispersion of [ITU-T G.652] fibre is given by Equation C.II-8:

$$D(\lambda) = \frac{\lambda S_0}{4}\left[1-\frac{\lambda_0^4}{\lambda^4}\right], \qquad \text{(C.II-8)}$$

where $\boldsymbol{S}_0$ is the dispersion slope (maximum 0.092 ps/nm^2/km), and λ_0 is the zero dispersion wavelength (ranging from 1 300 to 1 324 nm).

The index of refraction and ***D*** are related by $\frac{dn}{d\lambda} = cD(\lambda)$, and the fundamental theorem of calculus indicates that (see Equation C.II-9)

$$n = n_0 + c\int_{\lambda_0}^{\lambda} D(\lambda)d\lambda. \qquad \text{(C.II-9)}$$

Exhibit 1010
IPR2024-00899, USPN 9,806,892
259 of 290

Integrating would result in Equation C.II-10:

$$n - n_0 = \frac{cS_0}{8}\lambda^2\left[1 - \frac{\lambda_0^2}{\lambda^2}\right]^2 . \qquad \text{(C.II-10)}$$

Figure C.II.1 illustrates the index difference function graphed for the two extreme cases of [ITU-T G.652] fibre where the zero dispersion wavelengths are 1 300 and 1 324 nm. Also, shown are the wavelength ranges for XGS-PON ONU transceivers (1 260 to 1 280 nm for the upstream and 1 575 to 1 580 nm for the downstream). The maximum index difference is 0.000893, and the minimum index difference is 0.000676.

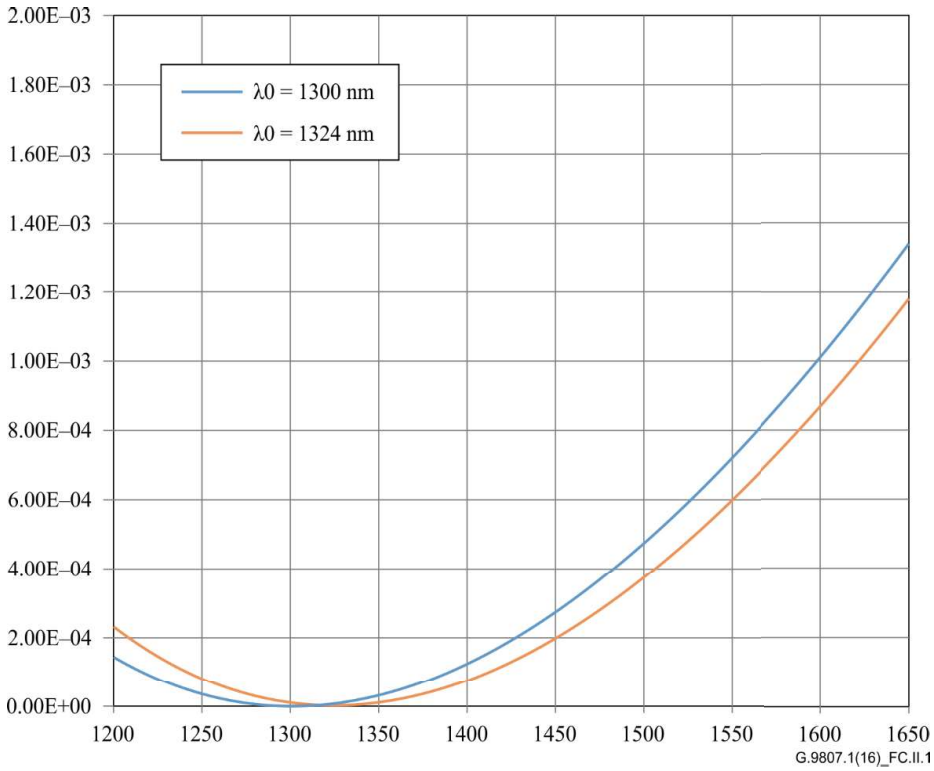

Figure C.II.1 – Refractive index difference as a function of operating wavelength

In practical systems, operating wavelengths are not monitored, nor is the exact fibre dispersion known. Hence, the index difference is truly an unknown quantity.

Index factor variability

Using Equation C.II-6 and substituting the value $\boldsymbol{n}$ = 1.47, which is a valid approximation for the group refractive indices of the commonly deployed fibres (precision is not important here), it is found that the index factor can range from 0.500115 to 0.500153. The most plausible refractive index factor value is 0.500134, but this may be incorrect by an amount of up to ±0.000019. The most accurate solution is achieved when both the OLT and the ONU use these common values:

$$\frac{n_{1577}}{n_{1270} + n_{1577}} \approx 0.500134,$$

$$\delta\left[\frac{n_{1577}}{n_{1270} + n_{1577}}\right] \leq 0.000019$$

Exhibit 1010
IPR2024-00899, USPN 9,806,892
260 of 290

eliminating the error due to differing values on either side of the PON. The inaccuracy of the time then amounts to ±0.000019 times the round trip time of the fibre. For an ONU at 20 km, the round trip time is approximately 200 microseconds and, therefore, the inaccuracy is ±3.8 ns which is negligible.

Exhibit 1010
IPR2024-00899, USPN 9,806,892
261 of 290

Appendix C.III

Burst profiles

(This appendix does not form an integral part of this Recommendation.)

This appendix describes burst profiles to be used by the PHY adaptation sublayer of the ONU to form the PHY burst. Suggested values of burst preamble and delimiter are presented.

In the XGS-PON system, upstream transmission from ONUs to the OLT is conducted by delivering a number of PHY bursts. After a guard time for burst overlap prevention, the PHY burst starts with the upstream physical synchronization block (PSBu) section. The PSBu contains preamble and delimiter. Preamble and delimiter are employed by the OLT burst mode receiver to determine the presence of a PHY burst and delineate the PHY burst. They are also used to determine the signal clock in order to correctly recover the transmitted signal.

The length and pattern of preamble and delimiter are formed as dictated by the OLT in the BurstProfile field in the BWmap. The index in the BurstProfile field refers to the set of valid burst profiles that is communicated to the ONUs over the PLOAM messaging channel. For each specified profile, the index is explicitly defined in the Burst_Profile PLOAM message.

The Burst_Profile PLOAM message can be either broadcast or unicast. It is up to the OLT to manage the burst profiles, and to anticipate which ONUs will have which profiles. The ONU is purely a slave in this situation, and will follow the instructions that the OLT gives to it. In the simplest case, the OLT can send only broadcast profile messages. The profiles then obtain global scope, and are equal for all ONUs. In a more complex case, the OLT can send unicast profiles to each ONU. These unicast profiles could then be different for each ONU (again, it is incumbent on the OLT to keep track of what it has configured in each ONU). Regarding temporal behaviour, the OLT should always send the profile message several times before it attempts to use them in a BWmap. In this way, the probability of the ONU using an old profile will be greatly reduced.

The recommended size of preamble is 1 280 bits for 9.95328 Gbit/s, see Appendix B.III. Preambles with varying sizes can be achieved by setting the burst profile to the desired parameters.

A traditional preamble pattern is 0x AAAA AAAA. While it provides maximum transition density and direct current (DC) balance, some implementations may have different preamble requirements. For example, if the burst mode receiver has bandwidth limited front ends, the aforementioned preamble pattern is not able to support highly efficient burst presence detection. Another example is burst mode receivers with peak detectors. If the peak detectors have limited slew rates in the sample and hold circuit, the aforementioned preamble cannot fulfil highly efficient burst presence detection. Therefore, data-like preamble patterns are added into the possible preamble patterns. The selected data-like preamble patterns are expected to have features of DC balance, flat power spectrum, transition density similar to that of random data, and long run length. The suggested values of XGS-PON preamble patterns are shown in Table C.III.1.

The recommended size of delimiter is 32 bits. When a longer delimiter time is required in the case of high BER, 64-bits delimiters can be used to provide more robust burst delineation. The expected features of the selected delimiters include DC balance, large distance from all shifted patterns of itself, and large distance from all shifted patterns of the preamble.

In other cases, it is desirable to indicate if the burst has FEC active or not using a pair of distinct delimiters. The suggested values of such pairs of delimiters are shown in Table C.III.1.

Exhibit 1010
IPR2024-00899, USPN 9,806,892
262 of 290

Table C.III.1 – Suggested values of preamble and delimiter

Preamble	32-bit delimiter	64-bit delimiter
0x BB52 1E26	0x A376 70C9	0x B9D4 3E68 462B C197
	0x 4BDE 1B90 (FEC on)	0x B9D4 3E68 462B C197 (FEC on)
	0x A376 70C9 (FEC off)	0x B752 1F06 48AD E879 (FEC off)
0x AAAA AAAA	0x AD4C C30F	0x B3BD D310 B2C5 0FA1
	0x A566 79E0 (FEC on)	0x B3BD D310 B2C5 0FA1 (FEC on)
	0x AD4C C30F (FEC off)	0x CE99 CE5E 5028 B41F (FEC off)

Exhibit 1010
IPR2024-00899, USPN 9,806,892
263 of 290

Appendix C.IV

Golden vectors

(This appendix does not form an integral part of this Recommendation.)

C.IV.1 10G downstream and upstream FEC codeword

This is an example of a FEC codeword for downstream and/or upstream at a nominal line rate of 9.95328 Gbit/s. The payload is an incrementing string of bytes starting at 0x01 and having the length of 216. The 32 FEC parity bytes are shown underlined.

RS(248, 216)

```
0x01 0x02 0x03 0x04 0x05 0x06 0x07 0x08 0x09 0x0a 0x0b 0x0c 0x0d 0x0e 0x0f 0x10
0x11 0x12 0x13 0x14 0x15 0x16 0x17 0x18 0x19 0x1a 0x1b 0x1c 0x1d 0x1e 0x1f 0x20
0x21 0x22 0x23 0x24 0x25 0x26 0x27 0x28 0x29 0x2a 0x2b 0x2c 0x2d 0x2e 0x2f 0x30
0x31 0x32 0x33 0x34 0x35 0x36 0x37 0x38 0x39 0x3a 0x3b 0x3c 0x3d 0x3e 0x3f 0x40
0x41 0x42 0x43 0x44 0x45 0x46 0x47 0x48 0x49 0x4a 0x4b 0x4c 0x4d 0x4e 0x4f 0x50
0x51 0x52 0x53 0x54 0x55 0x56 0x57 0x58 0x59 0x5a 0x5b 0x5c 0x5d 0x5e 0x5f 0x60
0x61 0x62 0x63 0x64 0x65 0x66 0x67 0x68 0x69 0x6a 0x6b 0x6c 0x6d 0x6e 0x6f 0x70
0x71 0x72 0x73 0x74 0x75 0x76 0x77 0x78 0x79 0x7a 0x7b 0x7c 0x7d 0x7e 0x7f 0x80
0x81 0x82 0x83 0x84 0x85 0x86 0x87 0x88 0x89 0x8a 0x8b 0x8c 0x8d 0x8e 0x8f 0x90
0x91 0x92 0x93 0x94 0x95 0x96 0x97 0x98 0x99 0x9a 0x9b 0x9c 0x9d 0x9e 0x9f 0xa0
0xa1 0xa2 0xa3 0xa4 0xa5 0xa6 0xa7 0xa8 0xa9 0xaa 0xab 0xac 0xad 0xae 0xaf 0xb0
0xb1 0xb2 0xb3 0xb4 0xb5 0xb6 0xb7 0xb8 0xb9 0xba 0xbb 0xbc 0xbd 0xbe 0xbf 0xc0
0xc1 0xc2 0xc3 0xc4 0xc5 0xc6 0xc7 0xc8 0xc9 0xca 0xcb 0xcc 0xcd 0xce 0xcf 0xd0
0xd1 0xd2 0xd3 0xd4 0xd5 0xd6 0xd7 0xd8 0x6d 0x8d 0x89 0x21 0x88 0x4d 0x6b 0x21
0x2e 0x3c 0xd6 0x8e 0x68 0x54 0x72 0x31 0x52 0xbd 0x9e 0xf7 0x45 0xf5 0x70 0x20
0x60 0xc4 0xe2 0xec 0x0b 0xef 0x18 0x1a
```

C.IV.2 10G upstream FEC short codeword

See clause C.10.1.3.2.2 for encoding and decoding mechanisms of the shortened FEC codeword.

C.IV.3 2.5G downstream and upstream FEC codeword

Not applicable to XGS-PON.

C.IV.4 2.5G downstream and upstream FEC short codeword

Not applicable to XGS-PON.

C.IV.5 Downstream AES-128 encryption

```
Data encryption key:    0x112233445566778899AABBCCDDEEFF00
Superframe counter:     0x0001028385834
Intraframe counter:     0x0078
Plaintext
0x00 0x01 0x02 0x03 0x04 0x05 0x06 0x07 0x08 0x09 0x0a 0x0b 0x0c 0x0d 0x0e 0x0f
0x10 0x11 0x12 0x13 0x14 0x15 0x16 0x17 0x18 0x19 0x1a 0x1b 0x1c 0x1d 0x1e 0x1f
0x20 0x21 0x22 0x23 0x24 0x25 0x26 0x27 0x28 0x29 0x2a 0x2b 0x2c 0x2d 0x2e 0x2f
0x30 0x31 0x32 0x33 0x34 0x35 0x36 0x37 0x38 0x39 0x3a 0x3b 0x3c 0x3d 0x3e 0x3f
```


Exhibit 1010
IPR2024-00899, USPN 9,806,892
264 of 290

```
Counter blocks
0x00040a0e160d007800040a0e160d0078
0x00040a0e160d007800040a0e160d0079
0x00040a0e160d007800040a0e160d007a
0x00040a0e160d007800040a0e160d007b
Ciphertext
0xff 0xd1 0xae 0x0c 0x4b 0x46 0xc9 0xc1 0x29 0x2f 0xde 0x06 0x1b 0x18 0xef 0x9c
0x87 0xb5 0x65 0x61 0x76 0xff 0x1c 0x6e 0xb2 0xf0 0xda 0xcd 0x53 0x8d 0x4a 0xd0
0x5b 0x38 0x9b 0xff 0xee 0x94 0x7b 0x54 0xcf 0xf7 0x74 0x54 0xd4 0x2d 0x08 0xfa
0x20 0x30 0x96 0x50 0xa4 0x3b 0xc1 0x40 0xc6 0x73 0xb0 0xf4 0x6e 0xcd 0x5b 0xeb
```

C.IV.6 Upstream AES-128 encryption

```
Data encryption key:    0x112233445566778899AABBCCDDEEFF00
Superframe counter:     0x0001028385834
Intraframe counter:     0x097c
Plaintext
0x00 0x01 0x02 0x03 0x04 0x05 0x06 0x07 0x08 0x09 0x0a 0x0b 0x0c 0x0d 0x0e 0x0f
0x10 0x11 0x12 0x13 0x14 0x15 0x16 0x17 0x18 0x19 0x1a 0x1b 0x1c 0x1d 0x1e 0x1f
0x20 0x21 0x22 0x23 0x24 0x25 0x26 0x27 0x28 0x29 0x2a 0x2b 0x2c 0x2d 0x2e 0x2f
0x30 0x31 0x32 0x33 0x34 0x35 0x36 0x37 0x38 0x39 0x3a 0x3b 0x3c 0x3d 0x3e 0x3f
Counter blocks
0x00040a0e160d097cfffbf5f1e9f2f683
0x00040a0e160d097cfffbf5f1e9f2f684
0x00040a0e160d097cfffbf5f1e9f2f685
0x00040a0e160d097cfffbf5f1e9f2f686
CipherText
0x0d 0x5a 0x46 0x57 0xfd 0x68 0x6f 0xa4 0xb3 0x8f 0x77 0x3a 0x88 0x7a 0x2b 0x33
0x86 0xd7 0xfe 0x53 0x3c 0x52 0x24 0xab 0x39 0x61 0xae 0x20 0xe6 0x15 0x12 0x0e
0xbb 0x2f 0xec 0xe4 0x16 0x50 0x5a 0x02 0x73 0x68 0x39 0x59 0x73 0x8b 0xd6 0x7d
0x75 0x96 0x85 0xcd 0x62 0x14 0x69 0xc1 0x14 0x66 0x59 0xf1 0xc3 0xa7 0xe4 0xd8
```

C.IV.7 Key derivation encryption

```
MSK-128   = 0x112233445566778899AABBCCDDEEFF00
PON-TAG   = 0x4f4c542344556677
ONU SN    = 0x564e445200112233
SK        = 0x795fcf6cb215224087430600dd170f07
OMCI_IK   = 0x184b8ad4d1ac4af4dd4b339ecc0d3370
PLOAM_IK  = 0xe256ce76785c78717c7b3044ab28e2cd
KEK       = 0x6f9c99b8361768937e453b165f609710
```

C.IV.8 Downstream PLOAM message integrity check

Exhibit 1010
IPR2024-00899, USPN 9,806,892
265 of 290

```
PLOAM message parameters:
      Message Type: Assign_Alloc-ID
      ONU-ID    = 0x13
      SeqNo     = 0x03
      Alloc-ID value    = 0x0445
      Alloc-ID type     = 0x01 (XGEM)
PLOAM_IK = 0xe256ce76785c78717c7b3044ab28e2cd
```

AES-CMAC-64(PLOAM_IK, 0x01|MSG)

```
0x46 0x39 0x87 0x56 0x28 0x08 0x14 0xe6
```

C.IV.9 Upstream PLOAM message integrity check

```
PLOAM message parameters:
      Message Type: Sleep_Request
      ONU-ID    = 0x13
      SeqNo     = 0x00
      Activity_level = 0x03
PLOAM_IK = 0xe256ce76785c78717c7b3044ab28e2cd
```

AES-CMAC-64(PLOAM_IK, 0x02|MSG)

```
0xfe 0xaf 0x8d 0x09 0x20 0x8f 0x0d 0x9b
```

C.IV.10 Upstream key reporting

```
Data_encryption_key = 0x112233445566778899AABBCCDDEEFF00
KEK = 0x6f9c99b8361768937e453b165f609710
```

AES-ECB (KEK, Data_encryption_key)

```
0x4018340d538bb3f50df3186cf075f7b6
```

AES-CMAC (KEK, Data_encryption_key | 0x33313431353932363533353839373933, 128)

```
0x3cc507bb1731c569ed7b79f8bdc376be
```

C.IV.11 Downstream OMCI message integrity check

```
OMCI message direction:
      Cdir = 0x01 (downstream)
OMCI_CONTENT:
      Transaction correlation identifier: 0x80 0x00
      Message type: 0x49 (GET)
      Device identifier: 0x0A (Baseline OMCI)
      Managed entity identifier: 0x01 0x00 0x00 0x00 (ONU-G)
      Message contents:
         0x00 0x80 0x00 0x00 0x00 0x00 0x00 0x00
         0x00 0x00 0x00 0x00 0x00 0x00 0x00 0x00
         0x00 0x00 0x00 0x00 0x00 0x00 0x00 0x00
```


Exhibit 1010
IPR2024-00899, USPN 9,806,892
266 of 290

```
          0x00 0x00 0x00 0x00 0x00 0x00 0x00 0x00
      OMCI trailer[1:4]: 0x00 0x00 0x00 0x28
OMCI_IK = 0x184b8ad4d1ac4af4dd4b339ecc0d3370
```

AES-CMAC (OMCI_IK, (Cdir | OMCI_CONTENT), 32)

```
0x78dca53d
```


Exhibit 1010
IPR2024-00899, USPN 9,806,892
267 of 290

Appendix C.V

Protection examples

(This appendix does not form an integral part of this Recommendation.)

This appendix is intentionally left empty.

Exhibit 1010
IPR2024-00899, USPN 9,806,892
268 of 290

Appendix C.VI

ICTP: Inter-channel-termination protocol

(This appendix does not form an integral part of this Recommendation.)

This appendix provides an overview of inter-channel-termination protocol (ICTP), which is executed between the OLTs and enables protection management. In case of any inconsistency between the system views obtained from the PON and ICTP interfaces, the OLT reports the inconsistency to OSS/EMS and avoids actions that may disrupt PON operation. Specific mitigation methods are out of scope of this Recommendation.

C.VI.1 ICTP use cases

The OLTs in a protection scenario may span across chassis and central offices, and the protection functions may be realized through a properly-defined ICTP.

In this clause, the key use cases (see Table C.VI.1) for ICTP are presented. These use cases cover the operational areas of:

– XGS-PON system creation and consistency verification;
– ONU activation, authentication and service provisioning;
– ONU wavelength channel mobility management.

Table C.VI.1 – ICTP use case descriptions

Number	Use case	Description
2	Silent start and OLT initialization	When a new OLT is initialized on a protected XGS-PON system, it employs ICTP to verify its configuration consistency with the system configuration and to avoid accidental interference.
3	Initial Zero-distance equalization delay selection	1) An OLT transmits an ICTP message containing its selected local Zero-distance EqD to its protection associated OLT in the pre-defined protection group. 2) Upon receipt of an ICTP message containing a Zero-distance EqD message, the OLT adjusts its local Zero-distance EqD to the larger of the two values.
5	SN and assigned ONU-ID consistency verification	For the ONU which pass the initial validation, the OLT sends a **broadcast ICTP message to confirm the SN uniqueness** (no ONU-ID have been assigned to that SN) and the consistency of the proposed ONU-ID assignment (no SN has been assigned that ONU-ID).

Exhibit 1010
IPR2024-00899, USPN 9,806,892
269 of 290

Table C.VI.1 – ICTP use case descriptions

Number	Use case	Description
6	ONU authentication information sharing	If the OLT receives the SN which is valid on the XGS-PON system, but cannot associate the reported Reg-ID with a valid service profile**, it sends a broadcast ICTP message** to ask the peer OLT if it recognizes the ONU.
7	Alloc-ID assignment consistency	Whenever an OLT assigns a non-default Alloc-ID to an ONU, it verifies with an ICTP interaction that the proposed Alloc-ID has not been assigned to any other ONU-ID in the Protection group.
11	Performance monitoring	Several performance monitoring parameters defined in Table 14-1/G.989.3 require the OLTs in a protected XGS-PON system to share the event counts over ICTP.
13	Protection/Load sharing pre-configuration	The peer OLTs on a XGS-PON system use ICTP to communicate TC layer configuration and service while configuring the ONU, and to exchange the notifications between PON LTs when protection is triggered.
14	Load haring configuration	The peer OLT on a XGS-PON system which are involved in load sharing use ICTP to communicate control information, service parameters and performance characteristics.

C.VI.2 ICTP primitives description

Several XGS-PON TC layer functions require interaction between the associated OLTs via the inter-channel-termination protocol (ICTP) in a protection scenario. These functions include:

- Status sharing;
- ONU activation;

The XGS-PON TC layer procedures implementing these functions interface with the ICT protocol by means of ICTP primitives. There are two types of ICTP primitives: transaction commits and messages. A transactions itself is composed of lower level message exchanges and is treated as an atomic operation.

Table C.VI.2 provides information on ICTP primitive description elements while Table C.VI.3 describes ICTP primitives.

Exhibit 1010
IPR2024-00899, USPN 9,806,892
270 of 290

Table C.VI.2 – ICTP primitive description elements

Description element	Content
Primitive name	This element contains the full primitive name and the compact primitive name that can be used for primitive invocation. For the type T primitives, this element also contains the transaction commit indications as presented to the communicating OLTs.
Type	Either single message (type M) or to an atomic message exchange guaranteeing consistency of the state between two communicating OLTs (type T).
Parameter option	The ICTP operations with similar functionality are unified under the same primitive name. When so is the case, the parameter option determines the specific set of parameters carried by the primitive.
Description	Functionality of the primitive
B/U flag	Not used
Use cases	Reference to Table C.VI.1.
Parameters	The parameter list specific to the given ICTP primitive

Invocations of ICTP primitives by the TC layer procedures have the following format:

ICTP:<Name> (<Parameter option>)

Exhibit 1010
IPR2024-00899, USPN 9,806,892
271 of 290

Table C.VI.3 – ICTP primitives

	Primitive name	Type	Description	Option	B/U	UC	Parameters
1	**Parameter notification** **prmNotify( )**	M	Notify the associated OLT of the local parameter values. Action upon receipt is contingent upon parameter option.				
				Teqd	B/U	UC3	Teqd
				ONU-ID	B/U	UC5	SN, ONU-ID
				Alloc_ID	B/U	UC7	SN, ONU-ID, Alloc-ID
3	**Parameter conflict** **prmConflict( )**	M	Notify the associated OLT of a parameter conflict	PON-ID	U	UC2	PON-ID
				ONU-ID	U	UC5	SN, ONU-ID
				Alloc-ID	U	UC7	SN, ONU-ID, Alloc-ID
4	**Protection handshake** **prtHandshake( )** Commit indications **Active()** **Standby()**	T	Negotiation between two PON LTs that have been either preconfigured or dynamically notified to host a particular ONU in order to decide which PON LT is going to serve the ONU at a given moment.	SN	U	UC6	SN
				Reg-ID	U	UC6	SN, Reg-ID, ONU-ID
5	**Bulk data transfer** **bulkData( )** Commit indications **Sent()** **Received()**	T	A block data transfer procedure with per-block acknowledgement and last block indication.	OLT	U	UC13	PON-ID, Teqd
				ONU-ID	U	UC13	SN, Reg-ID, ONU-ID, Port-IDs, Alloc-IDs.
6	**ONU authentication info sharing** **onuAuthent( )**	M	A broadcast message inquiring if any OLTs in the Protection Group system can confirm authenticity and has the service profile for the discovered ONU, which is identified either by the serial number only or by the serial number and the registration ID.	SN	B/U	UC6	SN
				Reg-ID	B/U	UC6	SN, ONU-ID, Reg-ID
7	**ONU authentication claim** **onuClaim( )**	M	A unicast message from the OLT that has ONU's service profile and can confirm its authenticity to the OLT that has discovered the ONU.	SN	U	UC6	SN
				Reg-ID	U	UC6	SN, ONU-ID, Reg-ID

Exhibit 1010
IPR2024-00899, USPN 9,806,892
272 of 290

Appendix C.VII

ONU equalization delay coordination across TWDM channels

(This appendix does not form an integral part of this Recommendation.)

Not applicable to XGS-PON.

Exhibit 1010
IPR2024-00899, USPN 9,806,892
273 of 290

Appendix C.VIII

PON-ID examples

(This appendix does not form an integral part of this Recommendation.)

The following descriptions are examples of PON-ID syntax, other formulations may be used.

PON-ID (32 bits)

The PON-ID is able to uniquely identify a downstream channel by including a series of data elements with increasingly narrow scope:

– Number of independent operators: 4..8 (i.e., ~2^3).
– Number of adjacent central offices: 4..7 (i.e., ~2^3).
– Number of OLT chassis in a central office: 64 (i.e., 2^6).
– Number of cards in an OLT chassis: up to 16 (i.e., 2^4).
– Number of OLT-ports on a line card: suggest supporting up to 32 (i.e., 2^5).
– Downstream wavelength channel identity (i.e., 2^4) – not used, and set to all zeros, for XGS-PON.

Table C.VIII.1 provides an example of PON-ID syntax.

Table C.VIII.1 – Example of PON-ID syntax

Operator (3 bits)	Central office (3 bits)	OLT chassis (6 bits)	OLT card (4 bits)	OLT port (5 bits)	DS wavelength (4 bits all set to zero for XGS-PON)

NOTE – Equivalent to Table VIII.2 of [ITU-T G.989.3]; it is not relevant to XGS-PON

Exhibit 1010
IPR2024-00899, USPN 9,806,892
274 of 290

Appendix I

Introduction of PMD parameters

(This appendix does not form an integral part of this Recommendation.)

The transmitter characteristics are measured by the transmitter extinction ratio and its average power. This appendix is intended to describe how optical modulation amplitude (OMA), extinction ratio, and average power are related to each other.

I.1 Relationship between OMA, extinction ratio, and average power

Clause 58.7.6 of [IEEE 802.3] defines the transmitter parameter optical modulation amplitude (OMA) whose relationship with averaged launch power and extinction ratio is as follows:

$$OMA = P_1 - P_0 \quad (1)$$

$$ER = \frac{P_1}{P_0} \quad (2)$$

$$P_{mean} \approx \frac{P_1 + P_0}{2} \quad (3)$$

$$OMA \approx 2 \times P_{mean} \times \frac{ER-1}{ER+1} \quad (4)$$

NOTE – The P_{mean} and ER are all in linear unit in above equations. OMA can be expressed in Watts or dBm.

For a compliant ONU transmitter, the relationship between OMA, extinction ratio and average power is illustrated in Figure I.1.1. Note that the OMA_{min} and AVP_{min} are calculated for ER = 6 dB, where AVP_{min} represents the mean launch power minimum as presented in Table B.9.4. The transmitter average launch power specifications can be further relaxed by allowing ER higher than 6 dB while maintaining the value of OMA above OMA_{min} and the average launch power above AVP'_{min} , while AVP'_{min} means the minimal launch power based on ER=9.0 dB (For example, ER should be ≥ 9.0 dB when AVP = 2.87 dBm for the N1 class). The grey area indicates a compliant part.

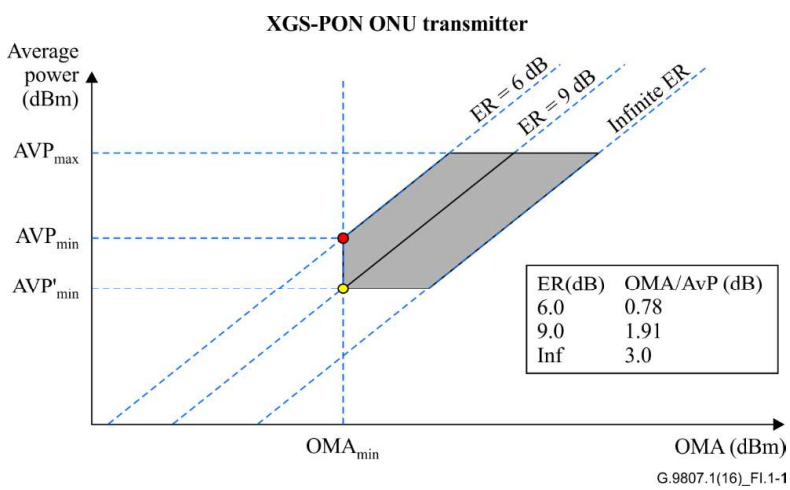

Figure I.1.1 – Graphical representation of region of XGS-PON ONU transmitter compliance

Exhibit 1010
IPR2024-00899, USPN 9,806,892
275 of 290

Appendix II

General statements on the relationship with NG-PON2 TC layer requirements

(This appendix does not form an integral part of this Recommendation.)

As a guide to the chipset implementers, this appendix contains a general overview of the relationship between this Recommendation and the NG-PON2 TC layer specifications [ITU-T G.989.3] to aid in adapting for XGS-PON use.

The XGS-PON TC layer is based on the ITU-T G.989.3 TC layer. This appendix documents the modifications to most parts of [ITU-T G.989.3] to obtain the XGS-PON TC layer specification in Annex C of this Recommendation. It will also serve as a guide when introducing future updates from [ITU-T G.989.3].

There are a few general statements that can be made about the relationship between XGS-PON TC layer and [ITU-T G.989.3]:

- The terms "OLT CT", "CT", "channel termination" and "channel termination entity" should be understood to be equivalent to "OLT" in the context of XGS-PON.
- The terms "TWDM" and "TWDM PON" should be considered to be equivalent to "XGS-PON" in the context of XGS-PON.
- Any reference to tuning is not used for XGS-PON.
- Any reference to channel management and AMCC is not used for XGS-PON.
- For XGS-PON, the in-band PLOAM transportation channel is the only PLOAM channel and it is mandatory.
- Any reference to wavelength division multiplexing, multiple TWDM channels, multiple wavelengths, multiple channels, channel signalling, switching between channels and channel handover is not used for XGS-PON.
- Any reference to Channel_Profile, System_Profile, Calibration_Request, Adjust_Tx_Wavelength, Tuning_Control, Protection_Control, Change_Power_Level, Power_Consumption_Inquire, Rate_Control, Tuning_Response, Power_Consumption_Report and Rate_Response PLOAM messages is not used for XGS-PON
- Any reference to wavelength calibration, wavelength calibration accuracy, wavelength tuning characteristics and wavelength tuning is not used for XGS-PON.
- Any reference to PtP or PTP WDM PON is not used for XGS-PON.

Specific details about the relationship between XGS-PON and [ITU-T G.989.3] are given in the following clauses.

For clause C.6 XGS-PON transmission convergence layer overview

This clause is derived from clause 6 of [ITU-T G.989.3] with the following exceptions:

- In clause 6.1.3.3, instead of the reference to ITU-T G.989.2, it should refer to the PMD section of this Recommendation.
- The UWLCH ID shall be set to all zeros for XGS-PON.
- In Table 6-1
  - Delete the row of 2.48832 Gbit/s line rate for both downstream and upstream.
  - Add a new note "NOTE – Line rate 2.48832 Gbit/s is included to support TDMA coexistence with XG-PON, see clause A.5.2.3 for the details of coexistence."

Exhibit 1010
IPR2024-00899, USPN 9,806,892
276 of 290

- In Table 6-2
  - Delete the row of 2.48832 Gbit/s line rate for both downstream and upstream.
  - Delete the row of 9.95328 Gbit/s in downstream and 2.48832 Gbit/s in upstream.
- In clause 6.1.5.3
  - Delete text "The administrative label is supplied by an EMS/OSS to the OLT NE. It is expected to follow some consistent physical or logical equipment numbering plan, and is treated transparently by the OLT", add text "For the support of TDMA coexistence with XG-PON ONUs, the PON-ID of a XGS-PON system can be provisioned by the same way as the 32-bit PON-ID field in G.987.3."
  - Delete text "In a TWDM PON system, PON-ID consists of a 28-bit administrative label and a 4-bit downstream wavelength channel ID (DWLCH ID)."
- In Table 6-4
  - Add ONU-ID=1022 (0x3FE) as "broadest/reserved" and add the following text "Broadcast address in PLOAMd; not used in PLOAMu. The number shall not be assigned to any ONU, and shall not be used as an ONU-ID."
- In Table 6-5
  - For Alloc-ID=1021, add the following comment: "This value shall not be used for the case of XGS-PON interworking with XG-PON."
  - For Alloc-ID=1022, add the following comment: "This value shall be used for serial number acquisition with XGS-PON ONUs."
  - For Alloc-ID=1023, add the following comment: "This value shall be used for serial number acquisition with XG-PON ONUs".
  - For Note 1, add the sentence "The OLT may not use Alloc-ID 1021 for the case of XGS-PON interworking with XG-PON."
- In Table 6-6
  - For the values 1021..65534, add to the comment field "The values 1021 and 1022 shall not be assigned to XG-PON ONUs."
- The following clauses in [ITU-T G.989.3] are not used: 6, 6.1, 6.1.5.2, 6.1.5.9, 6.2 (on its entirety).

For clause C.7 XGS-PON resource allocation and quality of service

Derived from clause 7 of [ITU-T G.989.3].

For clause C.8 XGS-PON transmission convergence framing sublayer

Derived from clause 8 of [ITU-T G.989.3] with the following exceptions:

- Delete any reference to 2.48832 Gbit/s downstream (e.g., Table 8-1).
- In clause 8.1.1.5, delete text "The downstream FS frame trailer contains a 4-byte field, bit-interleaved-even parity (BIP), computed over the entire FS frame. When downstream FEC is off in the TWDM TC PHY adaptation sublayer, the ONU uses the FS frame trailer (BIP) to estimate the BER of the optical link. When downstream FEC is on in the TWDM TC PHY adaptation sublayer, the ONU uses the FEC correction results to obtain the BER of the optical link.", replace it with "The downstream FS frame trailer contains a 4-byte field, with contents set at the discretion of the OLT. XGS-PON downstream FEC is statically configured as ON and the ONU uses the FEC correction results to obtain the BER of the optical link. To support TDMA coexistence with XG-PON, the XGS-PON OLT avoids ending the FS payload section with a short idle XGEM frame."
- The following clauses in [ITU-T G.989.3] are not used: 8.2 (and all sub-clauses of 8.2).

Exhibit 1010
IPR2024-00899, USPN 9,806,892
277 of 290

- In Figure 8-1, delete the block labelled "BIP".

For clause C.9 XGS-PON encapsulation method

Derived from clause 9 of [ITU-T G.989.3] with the following exceptions:

- ", with an objective that no downstream traffic remains pending after the recipient ONU tunes away to a different TWDM channel" is deleted in clause 9.3 as not applicable for XGS-PON.

For clause C.10 XGS-PON PHY adaptation sublayer

Derived from clause 10 of [ITU-T G.989.3] with the following exceptions:

- 2.48832 Gbit/s downstream (e.g., ITU-T G.989.3 clause 10.1.1.3, 10.1.1.4, 10.1.3) is not used for XGS-PON.
- For compatibility with XG-PON, downstream FEC is mandatory and always on.
- For compatibility with XG-PON, DS FEC flag = 1 (enabled), P flag = 1, R = 0, and C = 0, the 32-bit PON-ID can be provisioned in the same way as in ITU-T G.987.3, the TOL can be interpreted in the same way as in ITU-T G.987.3 (see clause 10.1.1.1.3 of [ITU-T G.989.3]).
- Clause 10.2 of [ITU-T G.989.3] is not used on its entirety.

For clause C.11 XGS-PON PLOAM messaging channel

Derived from clause 11 of [ITU-T G.989.3] with the following exceptions:

- In clause 11.2.1, add "The value 1021 (0x3FD) is reserved and should not appear as ONU-ID in PLOAM messages. Specially, the value 1022(0x3FE) is only used in the Burst_Profile message (see clause C.11.3.3.1) to indicate a broadcast burst profile for 9.95328 Gbit/s upstream line rate."
- In clause 11.3.1, code points 0x13 and higher are not used.
- In clause 11.3.2, code points 0x11 and higher are not used.
- In clause 11.3.3.1:
  - Repeat count (byte 17) is 5 bits for XG-PON ONUs
  - ONUs supporting 2.48832 Gbit/s upstream are either standalone XG-PON ONUs or part of a hybrid XGS-PON/XG-PON capable ONU (see clause C.6.1.1). In either case, when operating at 2.48832 Gbit/s upstream, these ONUs should be considered XG-PON ONUs and need only comprehend the Embedded OAM overhead fields and PLOAM messages that are defined in G.987.3.
  - ONU-ID/R-bit combinations to deal with XG-PON TDMA coexistence which is different with NG-PON2. A XGS-PON ONU must receive Burst_Profile PLOAMs with either ONU-ID=0x3FF or 0x3FE and will have the same behaviour regardless of which ONU-ID is received (i.e., it will process the rest of the Burst_Profile PLOAM message the same). A XG-PON ONU will only receive Burst_Profile PLOAMs with ONU-ID=0x3FF and will ignore the R-bit in those messages. If there could be a XG-PON ONU on the PON, the OLT can send 2.5 Gbit/s Burst_Profile PLOAMs to all ONUs using ONU-ID=0x3FF (R-bit is set to 0), and can send 10 Gbit/s Burst_Profile PLOAMs to only the XGS-PON ONUs using ONU-ID=0x3FE (R-bit is set to 1). Note that the alternative ONU-ID/R-bit combinations are possible, but will produce redundant or erroneous results.
- In clause 11.3.3.3, set X=0 (in octet 5) and set Octets 10-17 to zero.
- In clause 11.3.3.5, in octet 5, the value 0x3F is not allowed for XG-PON compatibility.
- In clause 11.3.3.7, bytes 8-9 are not used and set to 0.
- In clause 11.3.4.1, bytes 17-39 are ignored from XG-PON ONUs, and bytes 27-38 are not used for XGS-PON ONUs.

Exhibit 1010
IPR2024-00899, USPN 9,806,892
278 of 290

- In clause 11.3.4.4, bytes 6 and 7 are ignored from XG-PON ONUs.
- In clause 11.3.4.5, activity_level = 0x01 or 0x02 either ignored by the OLT or respond with sleep_allowed message = OFF.
- The following clauses in [ITU-T G.989.3] are not used: 11.2.6.3 through to 11.2.6.8, 11.3, 11.3.3.10 through to 11.3.3.18 (and associated PLOAM messages are deleted in Table 11-2), 11.3.4.6 through to 11.3.4.8 (and associated PLOAM messages are deleted in Table 11-3).
- In Table 11-4:
  - octet 1-2, add the following text "represents the Burst_Profile for both 2.48832 Gbit/s and 9.95328 Gbit/s upstream line rate, ONU-ID = 0x03FE represents the Burst_Profile only for 9.95328 Gbit/s upstream line rate."
  - Octet 17 replace "eight-bit preamble count, range 0-255" with "000P PPPP when R = 0; PPPP PPPP when R = 1."
- In Table 11-6:
  - Add octet 15, with content "Upstream nominal line rate indicator" and description "0000 000U, where: U – upstream nominal line rate, U = 0, 2.5 Gbit/s; U = 1, 10 Gbit/s. This indicator is only applicable for an ONU supporting multiple (9.95328 and 2.48832 Gbit/s) upstream line rates to select the instructed upstream nominal line rate to operate."
- In Table 11-24:
  - Octet 37 (TWDM), change the description to "A bitmap of the form 0000 00HL indicating the ONU's upstream nominal line rate capability: H – Upstream nominal line rate of 9.95328 Gbit/s; H = 0: not supported; H = 1: supported; L – Upstream nominal line rate of 2.48832 Gbit/s; L = 0: supported; L = 1: not supported."

For clause C.12 XGS-PON ONU activation

Specified in clause 12 and clause 12.1 of [ITU-T G.989.3] with the following exceptions:

- The terms "OLT CT", "CT", "channel termination" and "channel termination entity" should be understood to be equivalent to "OLT" in the context of XGS-PON.
- The terms "TWDM" and "TWDM PON" should be considered to be equivalent to "XGS-PON" in the context of XGS-PON.
- The term "NG-PON2: should be understood to be equivalent to "XGS-PON".
- Any reference to tuning is not used for XGS-PON.
- The activation cycle does not include learning of system or channel profiles or channel selection and verification. These elements are not used.
- The activation cycle does not include verification of any US or DS rate other than 10G US and 10G DS. See clause 6.
- Power levelling is not supported by XGS-PON.
- Any reference to channel management and AMCC is not used for XGS-PON (e.g., Table 12-1 and 12-3).
- Any reference to ICTP is not used for XGS-PON.
- For XGS-PON, the in-band PLOAM transportation channel is the only PLOAM channel and it is mandatory.
- Any reference to wavelength division multiplexing, multiple TWDM channels, multiple wavelengths, multiple channels and switching between channels is not used for XGS-PON.
- Any reference to Channel_Profile PLOAM messages is not used for XGS-PON.
- Any reference to PtP is not used for XGS-PON.

Exhibit 1010
IPR2024-00899, USPN 9,806,892
279 of 290

- The UWLCH ID shall be set to all zeros for XGS-PON.
- Timers TOZ, TO3, TO4, and TO5 are not used.
- States O8 and O9 are not used.
- CT protection mechanisms are unused. Example, WLCP.
- Clause 12.1.5, PON-ID checks are not used.
- Clause 12.1.6 is not used.
- Clause 12.2 is not used.
- In Table 12-1:
  - References to unused states and unused timers are removed.
  - Reference to unused PLOAM messages are removed.
  - References to tuning, channel acquisition, or channel profile management are removed.
  - Substate O5-2 is removed completely.
- In Table 12-2, unused timer entries are removed.
- In Table 12-3:
  - Unused states and references are removed from table.
  - Unused timers and references are removed from table.
  - Input "DWLCH ok to work" is not used.
  - Input "DWLCH not appropriate" is not used.
  - AMCC alternative semantic is not used.
  - Input "Calibration request" is not used.
  - Input "Tuning request" is not used.
  - Input "US Tuning confirmation" is not used.
  - Input "System_Profile" is not used.
  - Input "Channel_Profile" is not used.
  - Input "Adjust_Tx_Wavelength" is not used.
  - Input "Protection_Control" is not used.
- Figure 12-1, ONU state diagram, is modified according to the previous directives.
- Table 12-4, ONU state transition table, is modified according to the previous directives.
- As in the state diagram, unused states, timers, and inputs are removed.
- 12.1.4.3 (continued):
  - In Table 12-5, System profile, Channel profile and Protection PON-ID rows are unused.
  - In Table 12-5, Parameter sets VI and VII are unused.

For clause C.13 XGS-PON OLT and ONU timing relationships

Derived from clause 13 of [ITU-T G.989.3] with the following exceptions:

- The fibre propagation delay specified in clause 13.2.3.2 of ITU-T G.989.3 is modified with the values for the specific XGS-PON wavelengths.
- Clause 13.3 of [ITU-T G.989.3] is not used on its entirety.

FOR clause C.14 XGS-PON performance monitoring, supervision and defects

Derived from clause 14 of [ITU-T G.989.3] with the following exceptions:

Exhibit 1010
IPR2024-00899, USPN 9,806,892
280 of 290

- Performance monitoring does not include learning of system or channel profiles or channel selection and verification. These elements are not used.
- Table 14-1 is used with these exceptions:
  - Total received words protected by BIP-32 for each ONU is set to "No".
  - DS BIP-32 errors counts: note, if mandatory this may conflict with 987/989 interworking.
  - Counts associated with TWDM channel behaviours are not used.
  - Counts associated with unused counters TO3, TO4, or TO5 are not used.
  - Conditional counts including used counters are treated as unconditional counts of those counters. E.g., "LODS events resulting in ONU reactivation without synchronization being reacquired".
  - Counts associated with unused PLOAM messages are unused.
  - Counts associated with AMCC operation are unused.
  - Counts associated with activation, but that has AMCC or explicit TWDM behaviours are unused.
  - Tuning Control PM is not used.
  - Power Levelling PM is not used.
- Table 14-2 is used with these exceptions.
  - ALRFi is not used.
  - DOTXi is not used.

For clause C.15 XGS-PON security

Derived from clause 15 of [ITU-T G.989.3].

For clause C.16 XGS-PON power management

Derived from clause 16 of [ITU-T G.989.3] with the following exceptions:

- Clauses 16.1.5 and 16.2 are not used by XGS-PON.

For clause C.17 XGS-PON channel management

This clause is not used by XGS-PON.

For clause C.18 XGS-PON system protection

Derived from clause 18 of [ITU-T G.989.3] with the following exceptions:

- Text "(this timer needs to be shorter than timer TO2 to avoid moving to the Initial state (O1)) or it is brought back to Operation state (O5)" in clause 18.1 is deleted as not applicable for XGS-PON.
- Text "It would be beneficial if the ONUs are still in the O8/Off-Sync substate trying to synchronize with the downstream wavelength channel signal. Therefore" in clause 18.1 is deleted as not applicable for XGS-PON.
- Text ", but shorter than the timer TO4. Note that in configuration other than the described in this clauses (i.e., exact replication between working and protection OLT Channel groups), there might be a mismatch if the ONUs are trying to synchronize at a downstream wavelength different from the working OLT CT, in which case the ONUs will eventually move to Initial state (O1). Therefore the working OLT CT should be sending Ranging Grants, if it has suddenly lost all ONUs in the PON" in clause 18.1 is deleted as not applicable for XGS-PON.

For clause C.19 XGS-PON rogue behaviour and its mitigation

Derived from clause 19 of [ITU-T G.989.3] with the following exceptions:

Exhibit 1010
IPR2024-00899, USPN 9,806,892
281 of 290

- Clause 19.1, text "An ONU TX hops and transmits in the wrong upstream wavelength channel. Associated OLT channel termination detects the LOB_i while one or more affected channel terminations detect the interference signal." is deleted.
- Clause 19.1, text "An ONU TX tunes wrongly to a non-target upstream wavelength channel. Both source OLT channel termination and target OLT channel termination fail to discover the ONU, while one affected OLT channel termination detects the interference signal." Is deleted.
- Clause 19.2 is not used by XGS-PON.

For Annex C.A Hybrid error control (HEC) decoding and scrambler sequence codes

This is the same as Annex A of [ITU-T G.989.3].

For Annex C.B Forward error-correction using shortened Reed-Solomon codes

This is the same as Annex B of [ITU-T G.987.3].

For Annex C.C Secure mutual authentication via OMCI

This is the same as Annex C of [ITU-T G.987.3].

For Annex C.D Secure mutual authentication using IEEE 802.1X

This is the same as Annex D of [ITU-T G.987.3].

For Annex C.E Auxiliary management and control channel

This annex is not used by XGS-PON.

For Annex C.F Tuning sequences

This annex is not used by XGS-PON.

For Annex C.G Transcoded framing with FEC and OAM for PtP WDM AMCC TC

This annex is not used by XGS-PON.

For Appendix C.I Downstream line data pattern conditioning

This is the same as Appendix I of [ITU-T G.987.3]

For Appendix C.II Time of day derivation and error analysis

See Appendix II of [ITU-T G.987.3], but referenced to the specific XGS-PON wavelengths

For Appendix C.III Burst profiles

See Appendix III of [ITU-T G.989.3].

For Appendix C.IV Golden vectors

See Appendix IV of [ITU-T G.989.3], except for references to 2.5G downstream (e.g., clause C.IV.3 and C.IV.4).

For Appendix C.V Protection examples

This appendix is intentionally empty.

For Appendix C.VI ICTP: Inter-channel-termination protocol

This appendix is revised for the protection use case.

For Appendix C.VII ONU equalization delay coordination across TWDM channels

This appendix is not used by XGS-PON.

Exhibit 1010
IPR2024-00899, USPN 9,806,892
282 of 290

Appendix III

Use of 10GEPON 10GBASE-PR-D3 (OLT) and 10GBASE-PR-U3 (ONU) optical modules with XGS-PON symmetric

(This appendix does not form an integral part of this Recommendation.)

IEEE 10GEPON 10GBASE-PR-D3 (OLT) and 10GBASE-PR-U3 (ONU) optical modules may be used with XGS-PON for 10 Gbit/s symmetric applications. This appendix gives a comparison of the 10GBASE-PR-D3 (OLT) and 10GBASE-PR-U3 (ONU) PMD specifications with the XGS-PON Annex B OLT PMD specification. This appendix also highlights XGS-PON requirements that may not be met when using these optical modules.

Users of this appendix should not assume that all the requirements for XGS-PON are met. It is the responsibility of the network operator to determine if their requirements can be met.

The following XGS-PON requirements will not be supported when using 10GBASE-PR-D3 (OLT) and 10GBASE-PR-U3 (ONU) optical modules:

- N2, E1 and E2 optical path loss classes.

The following XGS-PON requirements may not be supported when using 10GBASE-PR-D3 (OLT) and 10GBASE-PR-U3 (ONU) optical modules:

- Co-existence with XG-PON ONUs;
- X/S requirements in Annex B / Wavelength blocking filters in Annex A;
- Equipment reflectance.

The operator should also be aware that the 10GBASE-PR-D3 (OLT) and 10GBASE-PR-U3 (ONU)optical modules were designed and tested to be compliant with clause 75 of [b-IEEE 802.3av] PMD specifications and test procedures. Notable differences with respect to XGS-PON include the line rates and line codes. The line rate and line code defined in clause 75 of [b-IEEE 802.3av] PMD is:

- Line rate – 10.3125 Gbit/s;
- Line code – 64B66B.

Instead the [b-IEEE 802.3av] optics modules will be used with XGS-PON line rates and codes:

- Line rate – 9.95328 Gbit/s;
- Line code – scrambled NRZ.

Compatibility of 10GBASE-PR-D3 (OLT) and 10GBASE-PR-U3 (ONU) optical modules with XGS-PON line rates and codes need to be determined by implementers. When using 10GBASE-PR-D3 type OLT and 10GBASE-PR-U3 type ONU optical modules with XGS-PON, there may be slight differences in parameters that should be considered.

Table III.1 shows the optical interface parameters for the 9.95328 Gbit/s downstream direction.

Exhibit 1010
IPR2024-00899, USPN 9,806,892
283 of 290

Table III.1 – Optical interface parameters of 9.95328 Gbit/s downstream direction (N1 class)

Item	Unit	Annex B	PR30
OLT transmitter (optical interface O_{td})			
Nominal line rate	Gbit/s	9.95328	10.3125
Operating wavelength band (Note 1)	nm	1 575 – 1 580	1 575 – 1 580
Line code	–	Scrambled NRZ	64B66B
Mask of the transmitter eye diagram	–	B.9.2.7.6.1, ITU-T G.959.1 "NRZ 10G 1 550 nm region" "square"	ITU-T G.959.1 "NRZ 10G Ratio Small" "prolate spheroid"
Maximum reflectance of equipment at S/R, measured at transmitter wavelength	dB	NA	-10
Mean launched power MIN	dBm	+2.0	2
Mean launched power MAX	dBm	+5.0	5
Launched optical power without input to the transmitter	dBm	NA	–
Minimum extinction ratio	dB	8.2	6
Transmitter tolerance to reflected optical power	dB	–15	–
Dispersion Range	ps/nm	0-400 (DD20)	–
Minimum side mode suppression ratio	dB	30	30
Maximum differential optical path loss	dB	15	
Jitter generation	–	B.9.2.9.7.3	–
Optical Penalties			
Maximum optical path penalty	dB	1.0	–
Transmitter and dispersion penalty (max)		–	1.5
ONU receiver (optical interface R)			
Maximum reflectance of equipment at R/S, measured at receiver wavelength	dB	–20	–12
Bit error ratio reference level	–	10^{-3}	10^{-3}
Minimum sensitivity at BER reference level	dBm	–28.0	–28.5
Minimum overload at BER reference level	dBm	–9.0	–10
Consecutive identical digit immunity	Bit	> 72	–
Jitter tolerance		B.9.2.9.7.2	–
Receiver tolerance to reflected optical power	dB	<10	–
NOTE – In the case of outdoor OLT deployment, it is allowed for the operating wavelength to span between 1 575-1 581 nm.			

The OLT transmit eye mask for 10GBASE-PR-D3 (OLT) is "elliptical" shaped, compared with the Annex B "square" mask. The 10GBASE-PR-U3 (ONU) receiver will be able to operate properly with this eye since it is designed for this eye.

The minimum ORL for PR30 is 20 dB, compared with Annex B minimum ORL of 32 dB. The implication of this difference is that the PR30 optical modules are designed to tolerate the much higher reflections expected from this lower ORL. Therefore PR30 optical modules will be able to operate with the 32 dB ORL.

Exhibit 1010
IPR2024-00899, USPN 9,806,892
284 of 290

The minimum extinction ratio for PR30 is 6 dB, compared with Annex B minimum extinction ratio of 8.2 dB. As noted in Appendix I, the extinction ratio is actually a variable, and Annex B extinction ratio can be reduced to 6 dB as long as the transmit power is increased to compensate. Therefore, there is no performance impact from the lower minimum extinction ratio.

The dispersion range is not specified in PR30. However, PR30 is specified to operate over a 20 km fibre.

The maximum optical path penalty (Annex B) and the transmitter and dispersion penalty (PR30) have different composition and therefore cannot be directly compared.

Table III.2 shows the optical interface parameters for the 9.95328 Gbit/s upstream direction.

Table III.2 – Optical interface parameters of 9.95328 Gbit/s upstream direction (N1 class)

Item	Unit	Annex B	PR30
ONU transmitter (optical interface O_{ru})			
Nominal line rate	Gbit/s	9.95328	10.3125
Operating wavelength band	nm	1 260 – 1 280	1 260 – 1 280
Line code	–	Scrambled NRZ (20 km)	64B66B
Mask of the transmitter eye diagram	–	B.9.2.7.6.2, ITU-T G.959.1 "NRZ 10G Ratio Small", "prolate spheroid"	ITU-T G.959.1 "NRZ 10G Ratio Small" "prolate spheroid"
Maximum reflectance of equipment at R/S, measured at transmitter wavelength	dB	–10	–10
Mean launch power minimum (at R/S)	dBm	+4.0	4
Mean launch power maximum (at R/S)	dBm	+9.0	9
Maximum transmitter enable transient time	bits (nsec)	1 280 (~128.6)	(512)
Maximum transmitter disable transient time	bits (nsec)	1280 (~128.6)	(512)
Minimum extinction ratio	dB	6.0	6
Tolerance to reflected optical power	dB	More than −15	–
Dispersion Range	ps/nm	0 to – 140 (DD20)	–
Minimum side mode suppression ratio	dB	30	30
Launched optical power without input to the transmitter	dBm	–45	–45
Jitter transfer	–	B.9.2.9.7.1	–
Jitter generation	–	B.9.2.9.7.3	–
Optical Penalties			
Maximum optical path penalty	dB	1	–
Transmitter and dispersion penalty (max)	dB	–	3
OLT receiver (optical interface R)			
Maximum reflectance of equipment at S/R, measured at receiver wavelength		–12	–12
Bit error ratio reference level	–	10^{-3}	10^{-3}

Exhibit 1010
IPR2024-00899, USPN 9,806,892
285 of 290

Table III.2 – Optical interface parameters of 9.95328 Gbit/s upstream direction (N1 class)

Item	Unit	Annex B	PR30
Sensitivity (at S/R)	dBm	–26.0	–28
Overload (at S/R)	dBm	–5.0	–6
Consecutive identical digit immunity	bit	72	–
Jitter tolerance	–	B.9.2.9.7.2	–

The receiver sensitivity for PR30 is 2 dB better than Annex B, resulting in better low received power performance. This is because of the difference between the maximum optical path penalty (Annex B) and the transmitter and dispersion penalty (PR30).

The overload value for PR30 is 1 dB lower than Annex B. This is because PR30 has a minimum loss of 15 dB and Annex B has a minimum loss of 14 dB. A survey of optics vendors indicated that the –5 dBm overload value could be achieved with commercially available PR30 optical modules.

Table III.3 shows the physical parameters of the ODN.

Table III.3 – Physical parameters of a simple ODN (N1 class)

Item	Unit	Annex B	PR30
Fibre type	–	[ITU-T G.652], or compatible	–
Attenuation range	dB	N1 class: 14-29	15-29
Maximum fibre distance between S/R and R/S points	km	DD20: 20	20
Minimum fibre distance between S/R and R/S points	km	0	0
Bidirectional transmission	–	1-fibre WDM	1-fibre WDM
Minimum ORL of ODN at O_{ru} and O_{rd}	dB	32	20
Minimum ORL of ODN at O_{lu} and O_{ld}	dB	32	20

Exhibit 1010
IPR2024-00899, USPN 9,806,892
286 of 290

Bibliography

[b-ITU-T G.671] Recommendation ITU-T G.671 (2012), *Transmission characteristics of optical components and subsystems*.

[b-ITU-T G.711.x] Recommendation ITU-T G.711.x-series (in force), *Pulse code modulation (PCM) of voice frequencies*.

[b-ITU-T G.723.1] Recommendation ITU-T G.723.1 (2006), *Dual rate speech coder for multimedia communications transmitting at 5.3 and 6.3 kbit/s*.

[b-ITU-T G.726] Recommendation ITU-T G.726 (1990), *40, 32, 24, 16 kbit/s Adaptive Differential Pulse Code Modulation (ADPCM)*.

[b-ITU-T G.729.x] Recommendation ITU-T G.729.x-series (in force), *Coding of speech at 8 kbit/s using conjugate-structure algebraic-code-excited linear prediction (CS-ACELP)*.

[b-ITU-T G.781] Recommendation ITU-T G.781 (2008), Synchronization layer function.

[b-ITU-T G.965] Recommendation ITU-T G.965 (2001), *V-interfaces at the digital local exchange (LE) – V5.2 interface (based on 2 048 kbit/s) for the support of access network (AN)*.

[b-ITU-T G.983.2] Recommendation ITU-T G.983.2 (2005), *ONT management and control interface specification for B-PON*.

[b-ITU-T G.984.3] Recommendation ITU-T G.984.3 (2014), *Gigabit-capable passive optical networks (G-PON): Transmission convergence layer specification.*

[b-ITU-T G.984.4] Recommendation ITU-T G.984.4 (2008), *Gigabit-capable passive optical networks (G-PON): ONT management and control interface specification*.

[b-ITU-T G.989.2] Recommendation ITU-T G.989.2 (2014), *40-Gigabit-capable passive optical networks 2 (NG PON2): Physical media dependent (PMD) layer specification*.

[b-ITU-T G.993.x] Recommendation ITU-T G.933.x-series (in force), *Very high speed digital subscriber line foundation*.

[b-ITU-T G.8264] Recommendation ITU-T G.8264 (2014), *Distribution of timing information through packet networks*.

[b-ITU-T G.9802] Recommendation ITU-T G.9802 (2015), *Multiple-wavelength passive optical networks (MW-PONs)*.

[b-ITU-T G.9805] Recommendation ITU-T G.9805 (2022), *Coexistence of passive optical network systems*.

[b-ITU-T G-Sup.39] Recommendation ITU-T G-Sup.39 (2016), *Optical system design and engineering considerations*.

[b-ITU-T G-Sup.45] Recommendation ITU-T G-Sup.45 (2009), *GPON power conservation*.

[b-ITU-T G-Sup.48] Recommendation ITU-T G-Sup.48 (2010), *10-Gigabit-capable passive optical networks: Interface between media access control with serializer/deserializer and physical medium dependent sublayers*.

[b-ITU-T G-Sup.49] Recommendation ITU-T G-Sup49 (2011), *Rogue optical network unit (ONU) considerations*.

Exhibit 1010
IPR2024-00899, USPN 9,806,892
287 of 290

[b-ITU-T G-Sup.51] Recommendation ITU-T G-Sup.51 (2017), *Passive optical network protection considerations*.

[b-ITU-T G-Sup.54] Recommendation ITU-T G-Sup.54 (2015), *Ethernet linear protection switching*.

[b-ITU-T H.248.x] Recommendation ITU-T H.248-series (in force), *Gateway control protocol*.

[b-ITU-T I.112] Recommendation ITU-T I.112 (1993), *Vocabulary of terms for ISDNs*.

[b-ITU-T Q.552] Recommendation ITU-T Q.552 (2001), *Transmission characteristics at 2-wire analogue interfaces of digital exchanges*.

[b-ITU-T Y.1731] Recommendation ITU-T Y.1731 (2015), *Operations, administration and maiyenance (OAM) functions and mechanisms for Ethernet-based networks*.

[b-ATIS 0600107] ATIS 0600107.2002(R2006), *Digital Hierarchy – Format Specifications.*

[b-ATIS 0900102] ATIS 0900102.1993(R2010), *Digital Hierarchy – Electrical Interfaces*.

[b-BBF TR-101] Broadband Forum, Technical Report TR-101, Issue: 2 (2011), *Migration to Ethernet-Based Broadband Aggregation.*

[b-BBF TR-069] Broadband Forum TR-069 Amendment 2 (2007), *CPE WAN Management Protocol V1.1*.

[b-BBF TR-301] Broadband Forum TR-301 (2015), *Architecture and Requirements for Fiber to the Distribution Point*.

[b-BBF TR-352] Broadband Forum TR-352 (2017) *Multi-wavelength PON Inter-Channel-Termination Protocol (ICTP) Specification*.

[b-BBF TR-355] Broadband Forum TR-355 (2016), *YANG Modules for FTTdp Management*.

[b-ETSI ETS 300 001] ETSI ETS 300 001 ed.4 (1997-01), *Attachments to the Public Switched Telephone Network (PSTN); General technical requirements for equipment connected to an analogue subscriber interface in the PSTN*.

[b-ETSI ETS 300 166] ETSI ETS 300 166 ed.1 (1993-08), *Transmission and Multiplexing (TM); Physical and electrical characteristics of hierarchical digital interfaces for equipment using the 2 048 kbit/s – based plesiochronous or synchronous digital hierarchies*.

[b-IEEE 802.1] IEEE 802.1-in force, *IEEE Standard for Local and metropolitan area networks – Port-Based Network Access Control*.

[b-IEEE 802.3av] IEEE Std 802.3av™-2009, *Physical Layer Specifications and Management Parameters for 10Gb/s Passive Optical Networks*.

[b-ISO/IEC MJSQ] ISO/IEC TR 14165-117:2007, *Information technology – Fibre channel – Part 117: Methodologies for jitter and signal quality (MJSQ).*

[b-ISPCS-2008] Tutorial on *IEEE 1588 Version 2 by* Geoffrey Garner in 2008 International IEEE Symposium on *Precision Clock Synchronization for Measurement, Control and Communication,* Ann Arbor, MI, USA, 2008.

SERIES OF ITU-T RECOMMENDATIONS

Series A	Organization of the work of ITU-T
Series D	Tariff and accounting principles and international telecommunication/ICT economic and policy issues
Series E	Overall network operation, telephone service, service operation and human factors
Series F	Non-telephone telecommunication services
Series G	**Transmission systems and media, digital systems and networks**
Series H	Audiovisual and multimedia systems
Series I	Integrated services digital network
Series J	Cable networks and transmission of television, sound programme and other multimedia signals
Series K	Protection against interference
Series L	Environment and ICTs, climate change, e-waste, energy efficiency; construction, installation and protection of cables and other elements of outside plant
Series M	Telecommunication management, including TMN and network maintenance
Series N	Maintenance: international sound programme and television transmission circuits
Series O	Specifications of measuring equipment
Series P	Telephone transmission quality, telephone installations, local line networks
Series Q	Switching and signalling, and associated measurements and tests
Series R	Telegraph transmission
Series S	Telegraph services terminal equipment
Series T	Terminals for telematic services
Series U	Telegraph switching
Series V	Data communication over the telephone network
Series X	Data networks, open system communications and security
Series Y	Global information infrastructure, Internet protocol aspects, next-generation networks, Internet of Things and smart cities
Series Z	Languages and general software aspects for telecommunication systems

Published in Switzerland
Geneva, 2023