International Telecommunication Union

ITU-T

TELECOMMUNICATION
STANDARDIZATION SECTOR
OF ITU

G.988

Amendment 1
(04/2011)

SERIES G: TRANSMISSION SYSTEMS AND MEDIA, DIGITAL SYSTEMS AND NETWORKS

Digital sections and digital line system – Optical line systems for local and access networks

---

ONU management and control interface (OMCI) specification

Amendment 1: Maintenance

Recommendation ITU-T G.988 (2010) – Amendment 1

Nokia of America Corporation *et al.*
Exhibit 1022
IPR2024-00899, USPN 9,806,892
1 of 86

ITU-T G-SERIES RECOMMENDATIONS

TRANSMISSION SYSTEMS AND MEDIA, DIGITAL SYSTEMS AND NETWORKS

INTERNATIONAL TELEPHONE CONNECTIONS AND CIRCUITS	G.100–G.199
GENERAL CHARACTERISTICS COMMON TO ALL ANALOGUE CARRIER-TRANSMISSION SYSTEMS	G.200–G.299
INDIVIDUAL CHARACTERISTICS OF INTERNATIONAL CARRIER TELEPHONE SYSTEMS ON METALLIC LINES	G.300–G.399
GENERAL CHARACTERISTICS OF INTERNATIONAL CARRIER TELEPHONE SYSTEMS ON RADIO-RELAY OR SATELLITE LINKS AND INTERCONNECTION WITH METALLIC LINES	G.400–G.449
COORDINATION OF RADIOTELEPHONY AND LINE TELEPHONY	G.450–G.499
TRANSMISSION MEDIA AND OPTICAL SYSTEMS CHARACTERISTICS	G.600–G.699
DIGITAL TERMINAL EQUIPMENTS	G.700–G.799
DIGITAL NETWORKS	G.800–G.899
DIGITAL SECTIONS AND DIGITAL LINE SYSTEM	G.900–G.999
General	G.900–G.909
Parameters for optical fibre cable systems	G.910–G.919
Digital sections at hierarchical bit rates based on a bit rate of 2048 kbit/s	G.920–G.929
Digital line transmission systems on cable at non-hierarchical bit rates	G.930–G.939
Digital line systems provided by FDM transmission bearers	G.940–G.949
Digital line systems	G.950–G.959
Digital section and digital transmission systems for customer access to ISDN	G.960–G.969
Optical fibre submarine cable systems	G.970–G.979
Optical line systems for local and access networks	**G.980–G.989**
Access networks	G.990–G.999
MULTIMEDIA QUALITY OF SERVICE AND PERFORMANCE – GENERIC AND USER-RELATED ASPECTS	G.1000–G.1999
TRANSMISSION MEDIA CHARACTERISTICS	G.6000–G.6999
DATA OVER TRANSPORT – GENERIC ASPECTS	G.7000–G.7999
PACKET OVER TRANSPORT ASPECTS	G.8000–G.8999
ACCESS NETWORKS	G.9000–G.9999

For further details, please refer to the list of ITU-T Recommendations.

Recommendation ITU-T G.988

ONU management and control interface (OMCI) specification

Amendment 1

Maintenance

Summary

Amendment 1 to Recommendation ITU-T G.988 (2010) continues the maintenance and evolution of OMCI as defined in Recommendation ITU-T G.988 (2010). In addition, it defines TC-layer PM for XG-PON in accordance with ITU-T G.987.3, extends OMCI to cover wider multicast use cases, extends the support of IPv6 and defines optional extensions to OMCI messages, in particular those related to testing. Finally, ITU-T G.988 is adapted to support IEEE 802.3 PON access networks.

History

Edition	Recommendation	Approval	Study Group
1.0	ITU-T G.988	2010-10-07	15
1.1	ITU-T G.988 (2010) Amend. 1	2011-04-13	15

Exhibit 1022
IPR2024-00899, USPN 9,806,892
3 of 86

FOREWORD

The International Telecommunication Union (ITU) is the United Nations specialized agency in the field of telecommunications, information and communication technologies (ICTs). The ITU Telecommunication Standardization Sector (ITU-T) is a permanent organ of ITU. ITU-T is responsible for studying technical, operating and tariff questions and issuing Recommendations on them with a view to standardizing telecommunications on a worldwide basis.

The World Telecommunication Standardization Assembly (WTSA), which meets every four years, establishes the topics for study by the ITU-T study groups which, in turn, produce Recommendations on these topics.

The approval of ITU-T Recommendations is covered by the procedure laid down in WTSA Resolution 1.

In some areas of information technology which fall within ITU-T's purview, the necessary standards are prepared on a collaborative basis with ISO and IEC.

NOTE

In this Recommendation, the expression "Administration" is used for conciseness to indicate both a telecommunication administration and a recognized operating agency.

Compliance with this Recommendation is voluntary. However, the Recommendation may contain certain mandatory provisions (to ensure, e.g., interoperability or applicability) and compliance with the Recommendation is achieved when all of these mandatory provisions are met. The words "shall" or some other obligatory language such as "must" and the negative equivalents are used to express requirements. The use of such words does not suggest that compliance with the Recommendation is required of any party.

INTELLECTUAL PROPERTY RIGHTS

ITU draws attention to the possibility that the practice or implementation of this Recommendation may involve the use of a claimed Intellectual Property Right. ITU takes no position concerning the evidence, validity or applicability of claimed Intellectual Property Rights, whether asserted by ITU members or others outside of the Recommendation development process.

As of the date of approval of this Recommendation, ITU had received notice of intellectual property, protected by patents, which may be required to implement this Recommendation. However, implementers are cautioned that this may not represent the latest information and are therefore strongly urged to consult the TSB patent database at http://www.itu.int/ITU-T/ipr/.

© ITU 2012

All rights reserved. No part of this publication may be reproduced, by any means whatsoever, without the prior written permission of ITU.

Exhibit 1022
IPR2024-00899, USPN 9,806,892
4 of 86

Table of Contents

		Page
1	Scope	1
2	References	1
4	Abbreviations and acronyms	1
	8.1 Managed entities	2
9	MIB description	4
	9.2 ANI management, traffic management	10
	9.3 Layer 2 data services	17
11	ONU management and control protocol	44
	A.2 Extended message set	45
	A.3 Baseline message set	57
Annex C – OMCI in Ethernet PON systems		70
	C.1 Establishing the ONU management and control channel (OMCC)	70
	C.2 Encapsulating OMCI messages in Ethernet frames	71
	C.3 Relationship between OMCI and OAM defined in IEEE 802.3 clause 57	72
	C.4 Adaptation of G-PON information model to EPON	72
Appendix II – G-PON mechanisms and services		77
	II.1 Layer 2 data service according to TR-156	77
Appendix III – Encapsulating OMCI messages in Ethernet frames		77
Bibliography		78

Exhibit 1022
IPR2024-00899, USPN 9,806,892
5 of 86

Recommendation ITU-T G.988

ONU management and control interface (OMCI) specification

Amendment 1

Maintenance

1 Scope

This amendment continues the maintenance and evolution of OMCI as defined in Recommendation ITU-T G.988 (2010). In addition, it defines TC-layer PM for XG-PON in accordance with Rec. ITU-T G.987.3, extends OMCI to cover wider multicast use cases, extends the support of IPv6 and defines optional extensions to OMCI messages, in particular those related to testing. Finally, Rec. ITU-T G.988 is adapted to support IEEE 802.3 PON access networks.

Changes to Rec. ITU-T G.988 (2010)

NOTE – In the remainder of this amendment, the headings of clauses are the same as the corresponding clauses in Rec. ITU-T G.988 (2010) that are to be modified as indicated in the *italic* text.

2 References

Delete reference [IETF RFC 3513] (obsolete).

4 Abbreviations and acronyms

Add the following acronyms to the list in alphabetic order:

DAD	Duplicate Address Detection, IPv6
DNS	Domain Name Server
DUID	DHCP Unique Identifier
IA_NA	Identity association for non-temporary addresses, RFC 3315
MLT	Mechanized Loop Test, Metallic Line Test
RA	Router Advertisement, IPv6
REN	Ringer Equivalent Number
ROH	Receiver Off Hook
RS	Router Solicitation, IPv6
SDU	Service Data Unit
SLAAC	Stateless Address Autoconfiguration, IPv6

Exhibit 1022
IPR2024-00899, USPN 9,806,892
7 of 86

8.1 Managed entities

Add the following new MEs to Table 8-1 in alphabetic order:

Clause	Managed entity	ITU-T G.984, ITU-T G.987	ITU-T G.986
9.2.14	Energy consumption performance monitoring history data		
9.4.5	IPv6 host config data		
9.3.33	MAC bridge port ICMPv6 process preassign table		
9.2.16	XG-PON downstream management performance monitoring history data		
9.2.15	XG-PON TC performance monitoring history data		
9.2.17	XG-PON upstream management performance monitoring history data		

Add the following to the introductory text:

Table 8-1 lists all of the managed entities. The designation M in a column indicates that the specified managed entity is mandatory for systems complying with the corresponding Recommendation. The designation M/E in a column indicates that the corresponding ME is mandatory and that its definition is adapted to [IEEE 802.3] applications in accordance with annex C. N/A indicates that the specified ME is not applicable. Other managed entities are present according to the architecture and the feature set offered by a given ONU.

Add a new column for IEEE 802.3 PON systems, and populate it as shown. The entries in the new column are blank except where explicitly shown below.

Clause	Managed entity	ITU-T G.984, ITU-T G.987	ITU-T G.986	IEEE 802.3, IEEE 802.3av
9.13.6	AAL 5 performance monitoring history data			N/A
9.13.5	AAL 5 profile			N/A
9.2.1	ANI-G	M		M
9.1.5	Cardholder	M		M
9.2.8	GAL Ethernet performance monitoring history data			N/A
9.2.7	GAL Ethernet profile			N/A
9.2.4	GEM interworking termination point	M		M/E
9.2.3	GEM port network CTP	M		M/E
9.2.13	GEM port network CTP performance monitoring history data			N/A
9.1.3	ONU data	M	M	M
9.1.2	ONU2-G	M		M
9.1.13	ONU-E			N/A
9.1.1	ONU-G	M		M
9.1.4	Software image	M		M
9.2.2	T-CONT	M		M

Exhibit 1022
IPR2024-00899, USPN 9,806,892
8 of 86

8.2.2 Layer 2 functions

Replace Figure 8.2.2-1 with the following updates (adds ICMPv6 preassign table).

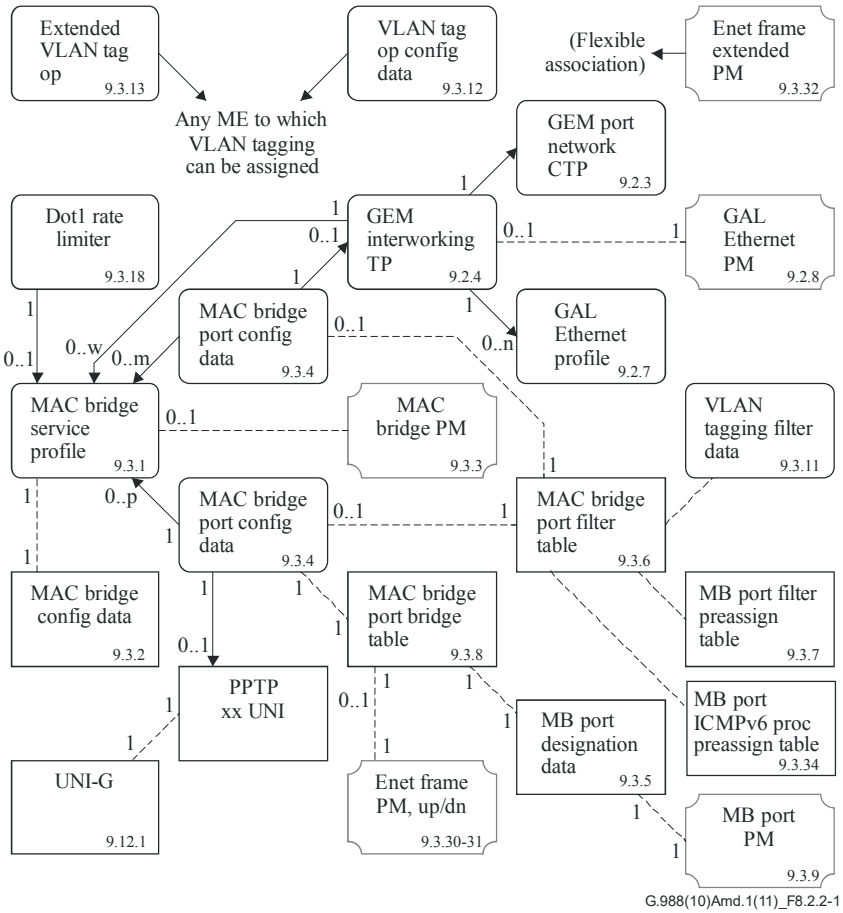

Figure 8.2.2-1 – MAC bridged LAN

8.2.8 VoIP service

Update the following figures as shown:

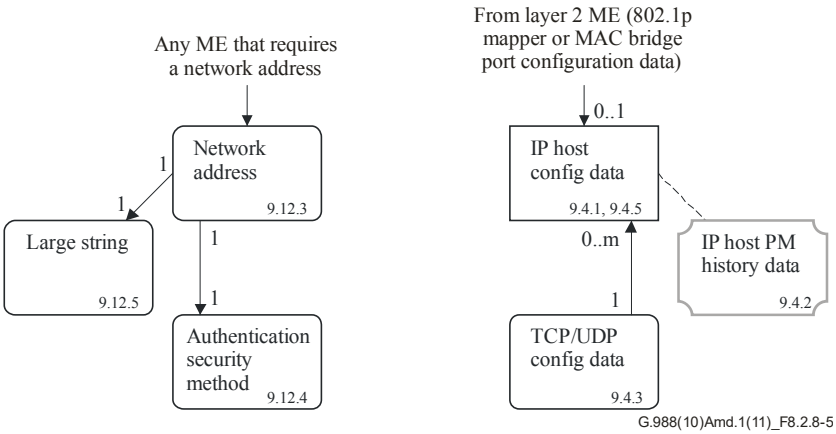

Figure 8.2.8-5 – Common IP services

Exhibit 1022
IPR2024-00899, USPN 9,806,892
9 of 86

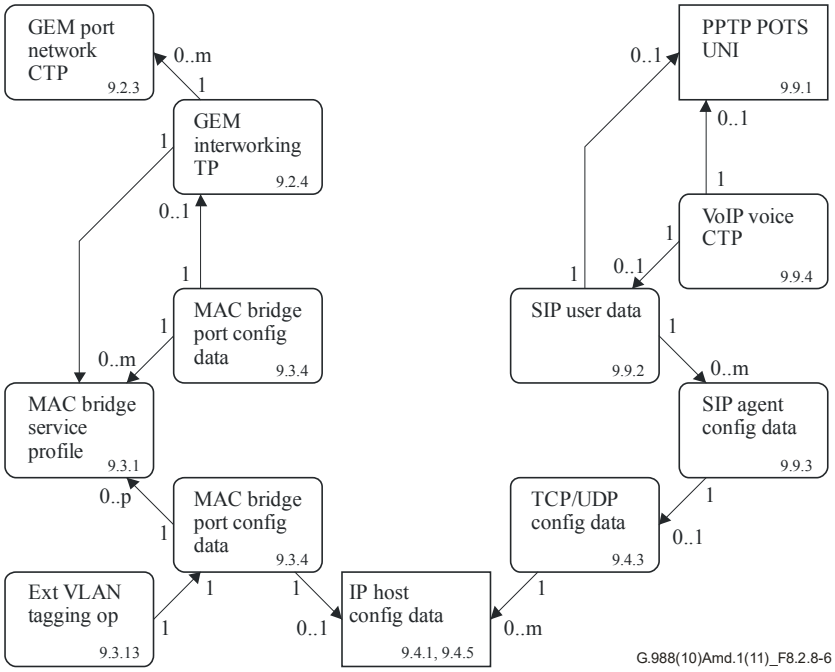

Figure 8.2.8-6 – VoIP connectivity

8.2.10 Mid-span PON reach extenders

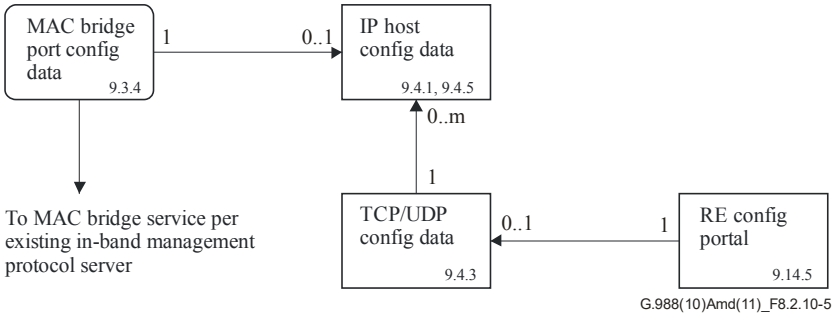

Figure 8.2.10-5 – In-band management for mid-span PON reach extender

9 MIB description

Revise the IPv6 address representation section to read as follows:

IPv6 address representation

The OMCI management information model was developed in the context of IPv4, which uses 4-byte addresses. IPv6 requires 16 bytes to fully represent an address. It is undesirable to define completely new MEs for IPv6, and both versions are likely to coexist for some time.

It is observed that 0.0.x.y is not a valid IPv4 address, although 0.0.0.0 may appear occasionally, for example in IGMP messages.

Exhibit 1022
IPR2024-00899, USPN 9,806,892
10 of 86

This Recommendation specifies that, for any 4-byte attribute defined as an IP address, mask or gateway, if the value is 0.0.x.y, where x and y are not both 0, then x.y is to be interpreted as a pointer to a large string managed entity that represents an IPv6 address. The syntax of the representation is described in [b-IETF RFC 4291]. When explicitly allowed for an individual attribute, the large string may also contain a URI.

Usually, large strings are created and deleted by the OLT. For IPv6 address representation, the ONU may also need to create and delete a large string. To avoid numbering conflicts, it is recommended that the OLT number large strings from 1 upward, while the ONU number auto-created large strings from 65534 downward.

MEs whose IP addresses are treated in accordance with this section, include:

- Dot 1X configuration profile.
- Multicast operations profile, querier IP address attribute. In this attribute, 0.0.0.0 is legal in IPv4.
- SIP agent config data, SIP DNS address attributes.
- SNMP configuration data.

The mechanism described in this section is suitable for individual IPv6 address attributes, but it does not scale well for managed entities that contain tables of IP addresses. Each of these MEs has its own definition of IPv6 treatment. In the future, any new MEs are to be defined with inbuilt IPv6 support.

9.1.1 ONU-G

Add the following attributes to the ONU-G in Rec. ITU-T G.988, and add two entries to the AVC table, as shown.

Logical ONU ID: This attribute provides a way for the ONU to identify itself. It is a text string, null terminated if it is shorter than 24 bytes, with a null default value. The mechanism for creation or modification of this information is beyond the scope of this Recommendation, but might include for example a web page displayed to a user. (R) (optional) (24 bytes)

Logical password: This attribute provides a way for the ONU to submit authentication credentials. It is a text string, null terminated if it is shorter than 12 bytes, with a null default value. The mechanism for creation or modification of this information is beyond the scope of this Recommendation. (R) (optional) (12 bytes)

Credentials status: This attribute permits the OLT to signal the ONU that its credentials are valid or not. The behaviour of the ONU is not specified, but might for example include displaying an error screen to the user. (R, W) (optional) (1 byte)

Values include:

0 Initial state, status indeterminate

1 Successful authentication

2 LOID error

3 Password error

4 Duplicate LOID

Other values are reserved.

Exhibit 1022
IPR2024-00899, USPN 9,806,892
11 of 86

Notifications

Attribute value change

Number	Attribute value change	Description
1..7	N/A	
8	Op state	Operational state change
9	N/A	
10	LOID	Logical ONU ID
11	Lpw	Logical password
12..16	Reserved	

9.1.2 ONU2-G

Add codepoints A1, B0, B1 as follows:

OMCC version: This attribute identifies the version of the OMCC protocol being used by the ONU. This allows the OLT to manage a network with ONUs that support different OMCC versions. Release levels of [ITU-T G.984.4] are supported with code points of the form 0x8y and 0x9y, where y is a hexadecimal digit in the range 0..F. Support for continuing revisions of Recommendation ITU-T G.988 is defined in the 0xAy and 0xBy ranges.

0x80 ITU-T G.984.4 (06/04)

NOTE – For historic reasons, this code point may also appear in ONUs that support later versions of ITU-T G.984.4.

0x81 ITU-T G.984.4 Amd.1 (06/05)

0x82 ITU-T G.984.4 Amd.2 (03/06)

0x83 ITU-T G.984.4 Amd.3 (12/06)

0x84 ITU-T G.984.4 2008 (2/08)

0x85 ITU-T G.984.4 2008 Amd.1 (06/09)

0x86 ITU-T G.984.4 2009 Amd.2 (2009). Baseline message set only, without the extended message set option

0x96 ITU-T G.984.4 2009 Amd.2 (2009). Extended message set option, in addition to the baseline message set

0xA0 ITU-T G.988 (2010). Baseline message set only, without the extended message set option

0xA1 ITU-T G.988 Amd.1 (2011). Baseline message set only

0xB0 ITU-T G.988 (2010). Baseline and extended message set

0xB1 ITU-T G.988 Amd.1 (2011). Baseline and extended message set

(R) (mandatory) (1 byte)

9.1.4 Software image

Replace clause 9.1.4 with the following text:

This managed entity models an executable software image stored in the ONU (documented here as its fundamental usage). It may also be used to represent an opaque vendor-specific file (vendor-specific usage).

Exhibit 1022
IPR2024-00899, USPN 9,806,892
12 of 86

Fundamental usage

The ONU automatically creates two instances of this managed entity upon the creation of each managed entity that contains independently-manageable software, either the ONU itself or an individual circuit pack. It populates ME attributes according to data within the ONU or the circuit pack.

Some pluggable equipments may contain no software. Others may contain software that is intrinsically bound to the ONU's own software image. No software image ME need exist for such equipments, though it may be convenient for the ONU to create them to support software version audit from the OLT. In this case, the dependent MEs would support only the get action.

A slot may contain various equipments over its lifetime, and if software image MEs exist, the ONU must automatically create and delete them as the equipage changes. The identity of the software image is tied to the cardholder.

When ONU controller packs are duplicated, each can be expected to contain two software image MEs, managed through reference to the individual controller packs themselves. When this occurs, the ONU should not have a global pair of software images MEs (instance 0), since an action (download, activate, commit) directed to instance 0 would be ambiguous.

Relationships

Two instances of the software image managed entity are associated with each instance of the ONU or cardholder the software of which is independently managed.

Attributes

Managed entity id: This attribute uniquely identifies each instance of this managed entity. The first byte indicates the physical location of the equipment hosting the software image, either the ONU (0) or a cardholder (1..254). The second byte distinguishes between the two software image ME instances (0..1). (R) (mandatory) (2 bytes)

Version: This string attribute identifies the version of the software. (R) (mandatory) (14 bytes)

Is committed: This attribute indicates whether the associated software image is committed (1) or uncommitted (0). By definition, the committed software image is loaded and executed upon reboot of the ONU and/or circuit pack. During normal operation, one software image is always committed, while the other is uncommitted. Under no circumstances are both software images allowed to be committed at the same time. On the other hand, both software images could be uncommitted at the same time if both were invalid. Upon ME instantiation, instance 0 is initialized to committed, while instance 1 is initialized to uncommitted (that is, the ONU ships from the factory with image 0 committed). (R) (mandatory) (1 byte)

Is active: This attribute indicates whether the associated software image is active (1) or inactive (0). By definition, the active software image is one that is currently loaded and executing in the ONU or circuit pack. Under normal operation, one software image is always active while the other is inactive. Under no circumstances are both software images allowed to be active at the same time. On the other hand, both software images could be inactive at the same time if both were invalid. (R) (mandatory) (1 byte)

Exhibit 1022
IPR2024-00899, USPN 9,806,892
13 of 86

Is valid: This attribute indicates whether the associated software image is valid (1) or invalid (0). By definition, a software image is valid if it has been verified to be an executable code image. The verification mechanism is not subject to standardization; however, it should include at least a data integrity (e.g., CRC) check of the entire code image. Upon ME instantiation or software download completion, the ONU validates the associated code image and sets this attribute according to the result. (R) (mandatory) (1 byte)

Actions

Get

Software upgrade is described in clause I.3. All of the following actions are mandatory for ONUs with remotely manageable software.

Start download: Initiate a software download sequence. This action is valid only for a software image instance that is neither active nor committed.

Download section: Download a section of a software image. This action is valid only for a software image instance that is currently being downloaded (image 1 in state S2, image 0 in state S2').

End download: Signal the completion of a download image sequence, providing both CRC and version information for final verification. This action is valid only for a software image instance that is currently being downloaded (image 1 in state S2, image 0 in state S2').

Activate image: Load/execute a software image. When this action is applied to a software image that is currently inactive, execution of the current code image is suspended, the associated software image is loaded from non-volatile memory, and execution of this new code image is initiated (that is, the associated entity reboots on the previously inactive image). When this action is applied to a software image that is already active, a soft restart is performed. The software image is not reloaded from non-volatile memory; the current volatile code image is simply restarted. This action is only valid for a valid software image.

Commit image: Set the *is committed* attribute value to 1 for the target software image ME and set the *is committed* attribute value to 0 for the other software image. This causes the committed software image to be loaded and executed by the boot code upon subsequent start-ups. This action is only applicable when the target software image is valid.

Notifications

None.

Vendor-specific usage

In this application, the software image ME is flexible, in keeping with the needs of particular vendors and applications. The distinction between fundamental and vendor-specific usage is that the ME ID must not be a value that could be used in the fundamental usage application. That is, the second byte of the ME ID must be neither 0x00 nor 0x01.

The ONU automatically instantiates as many instances as it is prepared to support.

- In its vendor-specific usage, the attributes of the software image ME are optional.
- The actions are optional.
- Files may or may not exist in versioned pairs (previous revision, next revision).

Exhibit 1022
IPR2024-00899, USPN 9,806,892
14 of 86

Relationships

A vendor-specific instance of the software image managed entity represents an externally visible file on the ONU. The content and use of the file are not specified.

Attributes

Managed entity id: This attribute uniquely identifies each instance of this managed entity. The first byte indicates the physical location of the equipment hosting the software image, either the ONU (0) or a cardholder (1..254). The second byte distinguishes between software image ME instances, and in vendor-specific usage is required to have neither the value 0x00 nor the value 0x01. To facilitate discovery by the OLT, it is suggested that the first byte of the ME id be 0, and that the second byte be numbered consecutively from 2. (R) (mandatory) (2 bytes)

Version: If this attribute is supported, its meaning is the same as that of the fundamental usage application. (R) (optional) (14 bytes)

Is committed: This attribute indicates whether the associated file is committed (1) or uncommitted (0). Vendor-specific instances may or may not exist in pairs, and may or may not support the concept of a commit. (R) (optional) (1 byte)

Is active: This attribute indicates whether the associated file is active (1) or inactive (0). Vendor-specific instances may or may not support the concept of an active state. (R) (optional) (1 byte)

Is valid: This attribute indicates whether the associated file is valid (1) or invalid (0). Vendor-specific instances may or may not include a way to determine their validity. (R) (optional) (1 byte)

Product code: This attribute provides a way for a vendor to indicate product code information on a file. It is a character string, padded with trailing nulls if it is shorter than 25 bytes. (R) (optional) (25 bytes)

Actions

Get

The following actions are available for vendor-specific use, but optional. If the ONU does not support a given action, it should respond with a command not supported result and reason code.

Start download: Initiate a software download sequence.

Download section: Download a section of a file.

End download: Signal the completion of a file download, providing CRC and version information for final verification, if supported. This action causes the file to be stored in the ONU's non-volatile memory.

NOTE – There is no explicit way to delete a file. It is suggested that the ONU recognize downloading a file of size zero as a delete operation, that is, a start download command specifying zero image size, followed by an immediate end download, with a zero CRC and also specifying zero image size.

Activate image: Effectuate the file, for example by loading its contents into ONU hardware. If appropriate, the hardware or application may be reinitialized.

Commit image: Set the *is committed* attribute value to 1 for the target file ME, if supported. The semantics of this operation are vendor-specific; there is no de-commit action.

Exhibit 1022
IPR2024-00899, USPN 9,806,892
15 of 86

Notifications

None.

9.2 ANI management, traffic management

...

9.2.4 GEM interworking termination point

Add a note to clause 9.2.4 after the description of the Service profile pointer attribute as follows:

Service profile pointer: This attribute points to an instance of a service profile:

CES service profile	if interworking option = 0
MAC bridge service profile	if interworking option = 1
Video return path service profile	if interworking option = 4
802.1p mapper service profile	if interworking option = 5
Null pointer	if interworking option = 6
CES service profile	if interworking option = 7

(R, W, Set-by-create) (mandatory) (2 bytes)

NOTE – The video return path service profile is defined in [ITU-T G.984.4].

9.2.5 Multicast GEM interworking termination point

Replace the first 4 paragraphs of the portion labelled "Multicast interworking GEM modes of operation" in this clause with the following:

Multicast interworking GEM modes of operation

The default multicast operation of the PON is where all the multicast content streams are carried in one PON layer connection (GEM port). This connection is then specified in the first entry of the IPv4 or IPv6 multicast address table, as the case may be. This single entry also specifies an all-inclusive IP multicast destination address range (e.g., 224.0.0.0 to 239.255.255.255 in the case of IPv4). The ONU then filters the traffic based on either Ethernet MAC addresses or IP addresses. The associated GEM port network CTP ME specifies the GEM port-ID that supports all multicast connections.

In the default multicast operation, all multicast content streams are placed in one PON layer connection (GEM port). The OLT sets up a completely conventional model, a pointer from the multicast GEM interworking termination to a GEM port network CTP. The OLT configures the GEM port-ID of the GEM port network CTP into the appropriate multicast address table attribute(s), along with the other table fields that specify the range of IP multicast destination addresses. The ONU accepts the entire multicast stream through the designated GEM port, then filters the traffic based on either Ethernet MAC address or IP destination address.

An optional multicast configuration supports separate multicast streams carried over separate PON layer connections, i.e., on separate GEM ports. This permits the ONU to filter multicast streams at the GEM level, which is efficient in hardware, while ignoring other multicast streams that may be of interest to other ONUs on the PON.

Exhibit 1022
IPR2024-00899, USPN 9,806,892
16 of 86

After configuring the explicit model for the first multicast GEM port, the OLT supports multiple multicast GEM ports by then configuring additional entries into the multicast address table(s), entries with different GEM port-IDs. The OMCI model is defined such that these ports are implicitly grouped together and served by the single explicit GEM port network CTP. No additional GEM network CTPs need be created or linked for the additional GEM ports.

...

Change the name of the existing multicast address table attribute and revise its description as shown:

IPv4 multicast address table: This attribute maps IPv4 multicast addresses to PON layer addresses. Each entry contains:

GEM port-ID	2 bytes
Secondary key	2 bytes
IP multicast destination address range start	4 bytes
IP multicast destination address range stop	4 bytes

The first four bytes of each entry are treated as a key into the list. The secondary key allows the table to contain more than a single range for a given GEM port.

A set action to a particular value overwrites any existing entry with the same first four bytes. If the last eight bytes of a set command are all zero, that entry is deleted from the list, as the IPv4 address 0.0.0.0 is not valid.

(R, W) (mandatory) (12N bytes, where N is the number of entries in the list.)

Add the new attribute:

IPv6 multicast address table: This attribute maps IPv6 multicast destination addresses to PON layer addresses. Each entry contains:

GEM port-ID	2 bytes
Secondary key	2 bytes
Least significant bytes, IP multicast destination address range start	4 bytes
Least significant bytes, IP multicast destination address range stop	4 bytes
Most significant bytes, IP destination address	12 bytes

The first four bytes of each entry are treated as a key into the list. The secondary key allows the table to contain more than a single range for a given GEM port.

A set action to a particular value overwrites any existing entry with the same first four bytes. If the last twenty bytes of a set command are all zero, that entry is deleted from the list.

(R, W) (optional) (24N bytes, where N is the number of entries in the list.)

Exhibit 1022
IPR2024-00899, USPN 9,806,892
17 of 86

9.2.14 Energy consumption performance monitoring history data

Add new clause 9.2.14 as follows:

This managed entity collects performance monitoring data associated with the ONU's energy consumption. The time spent in various low power states is recorded as a measure of their utility. Further, the ONU may also include the equivalent of a watt-hour meter, which can be sampled from time to time to measure actual power consumed.

For a complete discussion of generic PM architecture, refer to clause I.4.

Relationships

An instance of this managed entity is associated with the ONU in its entirety.

Attributes

Managed entity id: This attribute uniquely identifies each instance of this managed entity. The ME ID must be 0. (R, Set-by-create) (mandatory) (2 bytes)

Interval end time: This attribute identifies the most recently finished 15-minute interval. (R) (mandatory) (1 byte)

Threshold data 1/2 id: No thresholds are defined for this managed entity. For uniformity with other PM, the attribute is retained and shown as mandatory, but it should be set to a null pointer. (R, W, Set-by-create) (mandatory) (2 bytes)

Doze time: This attribute records the time during which the ONU was in doze energy conservation mode, measured in microseconds. (R) (mandatory) (4 bytes)

Cyclic sleep time: This attribute records the time during which the ONU was in cyclic sleep energy conservation mode, measured in microseconds. (R) (mandatory) (4 bytes)

Energy consumed: This attribute records the energy consumed by the ONU, measured in millijoules. (R) (optional) (4 bytes)

Actions

Create, delete, get, set

Get current data (optional)

Notifications

None.

9.2.15 XG-PON TC performance monitoring history data

Add new clause 9.2.15 as follows:

This managed entity collects performance monitoring data associated with the XG-PON transmission convergence layer, as defined in [ITU-T G.987.3].

For a complete discussion of generic PM architecture, refer to clause I.4.

Relationships

An instance of this managed entity is associated with an ANI-G.

Exhibit 1022
IPR2024-00899, USPN 9,806,892
18 of 86

Attributes

Managed entity id: This attribute uniquely identifies each instance of this managed entity. Through an identical ID, this managed entity is implicitly linked to an instance of the ANI-G. (R, Set-by-create) (mandatory) (2 bytes)

Interval end time: This attribute identifies the most recently finished 15-minute interval. (R) (mandatory) (1 byte)

Threshold data 1/2 id: This attribute points to an instance of the threshold data 1 managed entity that contains PM threshold values. Since no threshold value attribute number exceeds 7, a threshold data 2 ME is optional. (R, W, Set-by-create) (mandatory) (2 bytes)

PSBd HEC error count: This attribute counts HEC errors in any of the fields of the downstream physical sync block. (R) (optional) (4 bytes)

XGTC HEC error count: This attribute counts HEC errors detected in the XGTC header. (R) (optional) (4 bytes)

Unknown profile count: This attribute counts the number of grants received whose specified profile was not known to the ONU. (R) (optional) (4 bytes)

Transmitted XGEM frames: This attribute counts the number of non-idle XGEM frames transmitted. If an SDU is fragmented, each fragment is an XGEM frame and is counted as such. (R) (mandatory) (4 bytes)

Fragment XGEM frames: This attribute counts the number of XGEM frames that represent fragmented SDUs, as indicated by the LF bit = 0. (R) (optional) (4 bytes)

XGEM HEC lost words count: This attribute counts the number of four-byte words lost because of an XGEM frame HEC error. In general, all XGTC payload following the error is lost, until the next PSBd event. (R) (optional) (4 bytes)

XGEM key errors: This attribute counts the number of downstream XGEM frames received with an invalid key specification. The key may be invalid for several reasons, among which are:

a) GEM port provisioned for clear text and key index not equal to 00;

b) no multicast key of the specified key index has been provided via OMCI for a multicast GEM port;

c) no unicast key of the specified key index has been successfully negotiated (see [ITU-T G.987.3] clause 15.5 for key negotiation state machine);

d) GEM port specified to be encrypted and key index = 00;

e) key index = 11, a reserved value.

(R) (mandatory) (4 bytes)

XGEM HEC error count: This attribute counts the number of instances of an XGEM frame HEC error. (R) (mandatory) (4 bytes)

Actions

Create, delete, get, set

Get current data (optional)

Exhibit 1022
IPR2024-00899, USPN 9,806,892
19 of 86

Notifications

Threshold crossing alert

Alarm number	Threshold crossing alert	Threshold value attribute # (Note)
1	PSBd HEC error count	1
2	XGTC HEC error count	2
3	Unknown profile count	3
4	XGEM HEC loss count	4
5	XGEM key errors	5
6	XGEM HEC error count	6
NOTE – This number associates the TCA with the specified threshold value attribute of the threshold data 1 managed entity.		

9.2.16 XG-PON downstream management performance monitoring history data

Add new clause 9.2.16 as follows:

This managed entity collects performance monitoring data associated with the XG-PON transmission convergence layer, as defined in [ITU-T G.987.3]. It collects counters associated with downstream PLOAM and OMCI messages.

For a complete discussion of generic PM architecture, refer to clause I.4.

Relationships

An instance of this managed entity is associated with an ANI-G.

Attributes

Managed entity id: This attribute uniquely identifies each instance of this managed entity. Through an identical ID, this managed entity is implicitly linked to an instance of the ANI-G. (R, Set-by-create) (mandatory) (2 bytes)

Interval end time: This attribute identifies the most recently finished 15-minute interval. (R) (mandatory) (1 byte)

Threshold data 1/2 id: This attribute points to an instance of the threshold data 1 managed entity that contains PM threshold values. Since no threshold value attribute number exceeds 7, a threshold data 2 ME is optional. (R, W, Set-by-create) (mandatory) (2 bytes)

PLOAM MIC error count: This attribute counts MIC errors detected in downstream PLOAM messages, either directed to this ONU or broadcast to all ONUs. (R) (optional) (4 bytes)

Downstream PLOAM messages count: This attribute counts PLOAM messages received, either directed to this ONU or broadcast to all ONUs. (R) (optional) (4 bytes)

Profile messages received: This attribute counts the number of profile messages received, either directed to this ONU or broadcast to all ONUs. (R) (optional) (4 bytes)

Ranging_time messages received: This attribute counts the number of ranging_time messages received, either directed to this ONU or broadcast to all ONUs. (R) (mandatory) (4 bytes)

Exhibit 1022
IPR2024-00899, USPN 9,806,892
20 of 86

Deactivate_ONU-ID messages received: This attribute counts the number of deactivate_ONU-ID messages received, either directed to this ONU or broadcast to all ONUs. Deactivate_ONU-ID messages do not reset this counter. (R) (optional) (4 bytes)

Disable_serial_number messages received: This attribute counts the number of disable_serial_number messages received, whose serial number specified this ONU. (R) (optional) (4 bytes)

Request_registration messages received: This attribute counts the number of request_registration messages received. (R) (optional) (4 bytes)

Assign_alloc-ID messages received: This attribute counts the number of assign_alloc-ID messages received. (R) (optional) (4 bytes)

Key_control messages received: This attribute counts the number of key_control messages received, either directed to this ONU or broadcast to all ONUs. (R) (optional) (4 bytes)

Sleep_allow messages received: This attribute counts the number of sleep_allow messages received, either directed to this ONU or broadcast to all ONUs. (R) (optional) (4 bytes)

Baseline OMCI messages received count: This attribute counts the number of OMCI messages received in the baseline message format. (R) (optional) (4 bytes)

Extended OMCI messages received count: This attribute counts the number of OMCI messages received in the extended message format. (R) (optional) (4 bytes)

Assign_ONU-ID messages received: This attribute counts the number of assign_ONU-ID messages received since the last re-boot. (R) (optional) (4 bytes)

OMCI MIC error count: This attribute counts MIC errors detected in OMCI messages directed to this ONU. (R) (optional) (4 bytes)

Actions

Create, delete, get, set

Get current data (optional)

Notifications

Threshold crossing alert

Alarm number	Threshold crossing alert	Threshold value attribute # (Note)
1	PLOAM MIC error count	1
2	OMCI MIC error count	2
NOTE – This number associates the TCA with the specified threshold value attribute of the threshold data 1 managed entity.		

Exhibit 1022
IPR2024-00899, USPN 9,806,892
21 of 86

9.2.17 XG-PON upstream management performance monitoring history data

Add new clause 9.2.17 as follows:

This managed entity collects performance monitoring data associated with the XG-PON transmission convergence layer, as defined in [ITU-T G.987.3]. It counts upstream PLOAM messages transmitted by the ONU.

For a complete discussion of generic PM architecture, refer to clause I.4.

Relationships

An instance of this managed entity is associated with an ANI-G.

Attributes

Managed entity id:	This attribute uniquely identifies each instance of this managed entity. Through an identical ID, this managed entity is implicitly linked to an instance of the ANI-G. (R, Set-by-create) (mandatory) (2 bytes)
Interval end time:	This attribute identifies the most recently finished 15-minute interval. (R) (mandatory) (1 byte)
Threshold data 1/2 id:	No thresholds are defined for this managed entity. For uniformity with other PM, the attribute is retained and shown as mandatory, but it should be set to a null pointer. (R, W, Set-by-create) (mandatory) (2 bytes)
Upstream PLOAM message count:	This attribute counts PLOAM messages transmitted upstream, excluding acknowledge messages. (R) (optional) (4 bytes)
Serial_number_ONU message count:	This attribute counts Serial_number_ONU PLOAM messages transmitted. (R) (optional) (4 bytes)
Registration message count:	This attribute counts registration PLOAM messages transmitted. (R) (optional) (4 bytes)
Key_report message count:	This attribute counts key_report PLOAM messages transmitted. (R) (optional) (4 bytes)
Acknowledge message count:	This attribute counts acknowledge PLOAM messages transmitted. It includes all forms of acknowledgement, including those transmitted in response to a PLOAMu grant when the ONU has nothing to send. (R) (optional) (4 bytes)
Sleep_request message count:	This attribute counts sleep_request PLOAM messages transmitted. (R) (optional) (4 bytes)

Actions

Create, delete, get, set

Get current data (optional)

Notifications

None.

Exhibit 1022
IPR2024-00899, USPN 9,806,892
22 of 86

9.3 Layer 2 data services

Replace Figure 9.3-1 with the following update:

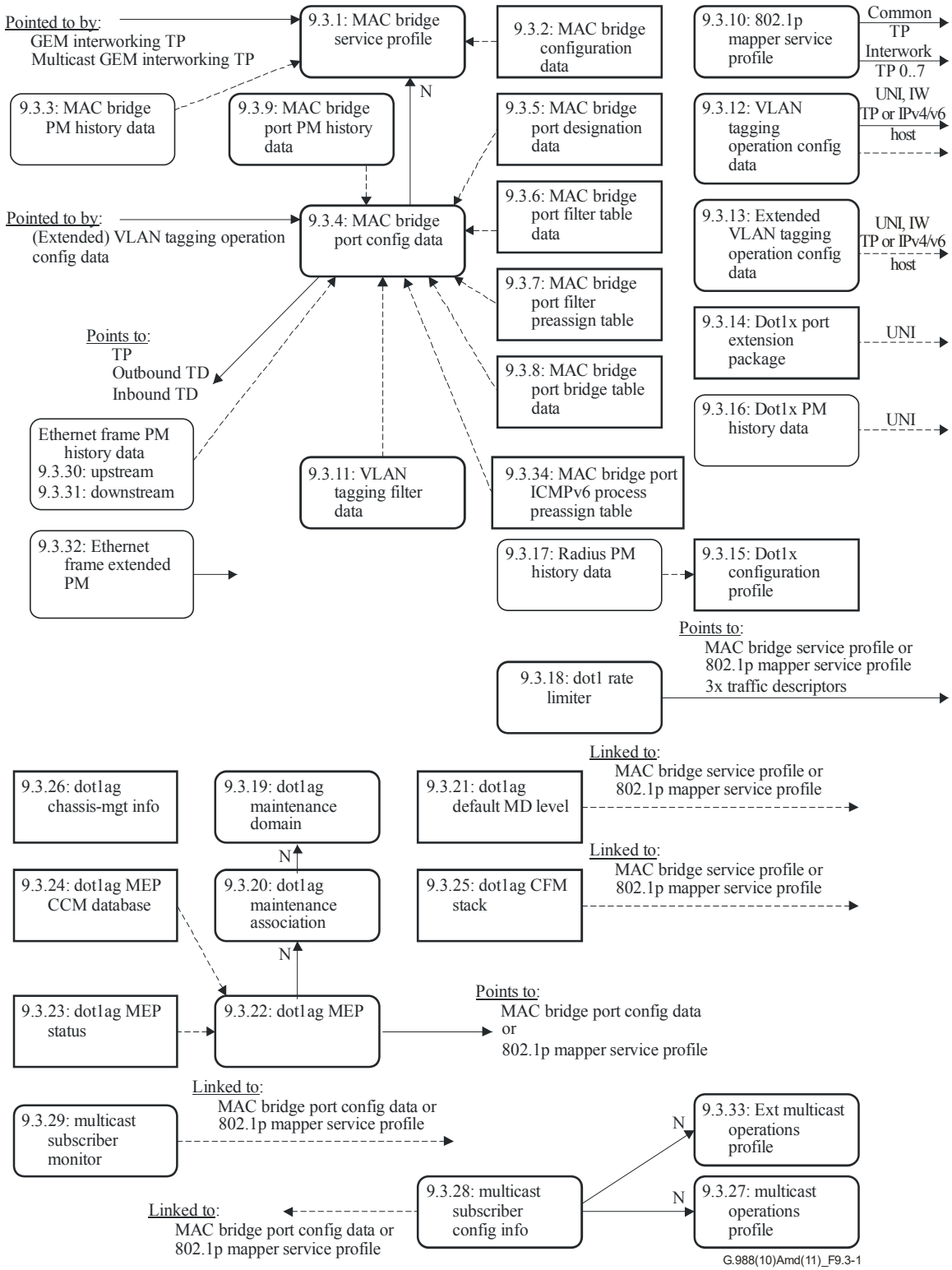

Exhibit 1022
IPR2024-00899, USPN 9,806,892
23 of 86

9.3.1 MAC bridge service profile

Revise description of dynamic filtering ageing time attribute to read as follows:

Dynamic filtering ageing time: This attribute specifies the age of dynamic filtering entries in the bridge database, after which unrefreshed entries are discarded. In accordance with [IEEE 802.1D] clause 7.9.2 and [IEEE 802.1Q] clause 8.8.3, the range is 10..1 000 000 seconds, with a resolution of 1 second and a default of 300 seconds. The value 0 specifies that the ONU use its internal default. (R, W, Set-by-create) (optional) (4 bytes)

9.3.4 MAC bridge port configuration data

Revise the description of code point 4 as indicated below.

TP type: This attribute identifies the type of termination point associated with this MAC bridge port. Valid values are:

...

4 IP host config data or IPv6 host config data

9.3.10 802.1p mapper service profile

Revise the description of code point 2 as indicated below.

TP type: This attribute identifies the type of termination point associated with the mapper.

...

2 Mapper directly associated with an IP host config data or IPv6 host config data ME

9.3.12 VLAN tagging operation configuration data

Revise description of ME ID:

Managed entity id: This attribute uniquely identifies each instance of this managed entity. When the optional association type attribute is 0 or undefined, this attribute's value is the same as the id of the managed entity with which this VLAN tagging operation configuration data instance is associated, which may be either a PPTP Ethernet UNI or an IP host config data or an IPv6 host config data ME. Otherwise, the value of the ME ID is unconstrained except by the need to be unique. (R, Set-by-create) (mandatory) (2 bytes)

Revise the description of code point 1 for the association type attribute as indicated below.

...

Association type: This attribute specifies the type of the ME that is associated with this VLAN tagging operation configuration data ME. Values are assigned in accordance with the following list.

...

1 IP host config data or IPv6 host config data

Exhibit 1022
IPR2024-00899, USPN 9,806,892
24 of 86

9.3.13 Extended VLAN tagging operation configuration data

Revise the description of code point 3 of the association type attribute as indicated below.

Association type: This attribute identifies the type of the ME associated with this extended VLAN tagging ME. Values are assigned as follows:

...

3 IP host config data or IPv6 host config data

Add code point 4 to the Filter Ethertype field, so that it reads as follows:

Filter Ethertype: (4 bits) The Ethertype value on which to filter received frames, as listed below.

NOTE 3 – This filter is recommended for use on untagged frames or frames with priority tags only.

0 Do not filter on Ethertype.

1 Ethertype = 0x0800 (filter IPv4 IPoE frames).

2 Ethertype = 0x8863 or 0x8864 (filter PPPoE frames).

3 Ethertype = 0x0806 (filter ARP frames).

4 Ethertype = 0x86DD (filter IPv6 IPoE frames)

Other values: Reserved

9.3.22 Dot1ag MEP

Modify the description of the fault alarm threshold as indicated below.

Fault alarm threshold: This attribute specifies the lowest priority alarm that is allowed to generate a fault alarm. The value 0 specifies that the ONU use its internal default. It is defined as follows:

9.3.27 Multicast operations profile

Revise the IGMP version attribute to read as follows:

IGMP version: This attribute specifies the version of IGMP to be supported. Support of a given version implies compatible support of previous versions. If the ONU cannot support the version requested, it should deny an attempt to set the attribute. (R,W, Set-by-create) (mandatory) (1 byte)

1 IGMP version 1 (deprecated)

2 IGMP version 2

3 IGMP version 3

16 MLD version 1

17 MLD version 2

Other values reserved

...

Exhibit 1022
IPR2024-00899, USPN 9,806,892
25 of 86

Revise the description of the upstream IGMP tag control attribute as shown:

Upstream IGMP tag control: This attribute controls the upstream IGMP TCI attribute. If this attribute is non-zero, a possible extended VLAN tagging operation ME is ignored for upstream frames containing IGMP/MLD packets. (R, W, Set-by-create) (optional) (1 byte)

Value	Meaning
0	Pass upstream IGMP/MLD traffic transparently, neither adding, stripping nor modifying tags that may be present.
1	Add a VLAN tag (including P bits) to upstream IGMP/MLD traffic. The tag is specified by the upstream IGMP TCI attribute.
2	Replace the entire TCI (VLAN ID plus P bits) on upstream IGMP/MLD traffic. The new tag is specified by the upstream IGMP TCI attribute. If the received IGMP/MLD traffic is untagged, an add operation is performed.
3	Replace only the VLAN ID on upstream IGMP/MLD traffic, retaining the original DEI and P bits. The new VLAN ID is specified by the VLAN ID field of the upstream IGMP TCI attribute. If the received IGMP/MLD traffic is untagged, an add operation is performed, with DEI and P bits also taken from the upstream IGMP TCI attribute.

Other values are reserved.

...

Replace the description of the dynamic access control table attribute and the discussion of table size with the following text:

Dynamic access control list table: This attribute is a list that specifies one or more multicast group address ranges. Each row in the list comprises up to 3 row parts, where each row part is 24 bytes long. Each entry must include row part 0. The ONU may also support row parts 1-2, thus allowing the table to contain logical rows that exceed the 24-byte definition of row part 0.

Table control (2 bytes)

16	15	14	13	12	11	10	9	8	7	6	5	4	3	2	1
Set ctrl		Row part ID			Test	Row key									

The first two bytes of each row part is the table control field, which comprises a key into the row, the row part identifier, and fields to define the result of a set operation and to test whether the ONU supports the extended table format.

It is the responsibility of the OLT to assign and track row keys and content. The ONU should deny set operations that create range overlaps.

Set ctrl The two MSBs of this field determine the meaning of a set operation. These bits are returned as 00 during get next operations.

Exhibit 1022
IPR2024-00899, USPN 9,806,892
26 of 86

Bits 16..15	Meaning
00	Reserved
01	Write this entry into the table. Overwrite any existing entry with the same row part ID and row key.
10	Delete this entry from the table, including all row parts. The remaining fields are not meaningful.
11	Clear all entries from the table. The remaining fields are not meaningful.

Row part ID The row part ID field distinguishes the row part associated with the current set or get operation.

Row part 0 is backward compatible with earlier versions of this ME definition. Row parts 1-2 are optional on a row by row basis. They can be set by using values 001-010 as the row part ID. Row parts 3-7 are reserved.

Bits 14..12	Meaning
000	The associated row part has format 0.
001	The associated row part has format 1.
010	The associated row part has format 2.
011..111	Reserved

Test This bit allows the OLT to determine whether an ONU supports the extended format access control list. If the ONU does not support extended format, it should be possible to set the test bit to 1 and read it back with a get and get next operation. If the ONU does support the extended format, this bit should always return the value 0 under a get next operation.

Row key The row key distinguishes rows in the table.

Exhibit 1022
IPR2024-00899, USPN 9,806,892
27 of 86

Row part definition

Byte	Row part 0	Row part 1	Row part 2
1 2	Table control (2 bytes)	Table control (2 bytes)	Table control (2 bytes)
3 4	GEM port ID (2 bytes)	Leading bytes of IPv6 source address (12 bytes)	Leading bytes of IPv6 destination address (12 bytes)
5 6	VLAN ID (ANI) (2 bytes)		
7 8 9 10	Source IP address (4 bytes)		
11 12 13 14	Destination IP address, start of range (4 bytes)		
15 16	Destination IP address, end of range (4 bytes)	Preview length (2 bytes)	Reserved (10 bytes)
17 18		Preview repeat time (2 bytes)	
19 20	Imputed group bandwidth (4 bytes)	Preview repeat count (2 bytes)	
21 22		Preview reset time (2 bytes)	
23 24	Reserved (2 bytes)	Reserved (2 bytes)	

Figure 9.3.27-1 – ACL row part formats

Format of row part 0:

– Table control (2 bytes)

– GEM port-ID (2 bytes)

– VLAN ID (ANI). This field specifies the VLAN carrying the multicast group downstream. The VLAN ID resides in the 12 least significant bits; the remaining bits are set to 0 and not used. The value 0 designates an untagged downstream flow. (2 bytes)

– Source IP address. The value 0.0.0.0 specifies that source IP address is to be ignored. By default, this is an IPv4 address; it may be an IPv6 address if it is associated with a part 1 row. (4 bytes)

– Destination IP address of the start of the multicast range. By default, this is an IPv4 address; it may be an IPv6 address if it is associated with a part 2 row. (4 bytes)

Exhibit 1022
IPR2024-00899, USPN 9,806,892
28 of 86

– Destination IP address of the end of the multicast range. By default, this is an IPv4 address; it may be an IPv6 address if it is associated with a part 2 row. (4 bytes)

– Imputed group bandwidth. Expressed in bytes per second, the imputed group bandwidth is used to decide whether or not to honour a join request in the presence of a max multicast bandwidth limit. The recommended default value 0 effectively allows this table entry to avoid max bandwidth limitations (4 bytes)

– Reserved, set to 0. (2 bytes)

A single multicast group may be specified by setting start and end destination IP addresses to the same value.

Format of row part 1:

– Table control (2 bytes)

– The leading bytes of the IPv6 source address (12 bytes). This field is prepended to the four-byte source IP address field of the corresponding part 0 row. The row part 0 address field is interpreted as an IPv4 address if the first 10 bytes of this row part 1 field are 0 and the last two bytes are either 0 or 0xFFFF [b-IETF RFC 4291]. The latter syntax is preferred.

– Preview length. The maximum duration of each preview in seconds. The value 0 designates a group that is fully authorized by subscription and is not subject to preview restrictions. The remaining preview attributes in this row part are ignored. (2 bytes)

– Preview repeat time. The minimum time in seconds between two previews of a given multicast group. (2 bytes)

– Preview repeat count. The maximum number of times a given multicast group may be previewed. A value of zero allows an unlimited number of previews. (2 bytes)

– Preview reset time. The time at which the ONU resets the preview repeat counter. The value assignments are as follows: (2 bytes)

  0: Do not reset the preview repeat counter automatically. It is cleared only upon explicit action by the OLT.

  1..24: The integer clock time at which the ONU resets the preview repeat counter. For example the value 2 resets the counter at 2:00 AM. If the ONU does not have a time of day clock, the preview repeat counter is reset every 24 hours at an indeterminate time selected by the ONU.

  25…240: Reserved by ITU

  241..254: Reserved for vendor specific use

  255: Used by the OLT to explicitly reset the preview repeat counter. A set action with this value clears the preview repeat count to zero, but does not alter the pre-existing value of the field in the table row part.

– Reserved (2 bytes)

Format of row part 2:

– Table control (2 bytes)

Exhibit 1022
IPR2024-00899, USPN 9,806,892
29 of 86

– The leading bytes of the IPv6 destination addresses (12 bytes). This field is prepended to the four-byte destination IP address field of the corresponding part 0 row. The row part 0 address field is interpreted as an IPv4 address if the first 10 bytes of this row part 2 field are 0 and the last two bytes are either 0 or 0xFFFF [b-IETF RFC 4291]. The latter syntax is preferred.

– Reserved (10 bytes)

(R, W) (mandatory) (each row part: 24 bytes)

Discussion of table size: While theoretically, this table could contain 1024 entries, real-world applications are not expected to require large tables. It is instead anticipated that the table will list a moderate number of contiguous ranges, each of which shares a common GEM port, VLAN, IP source address, imputed bandwidth, and preview characteristics. The ONU maintains preview counters and interval timers on a per-multicast group basis, not collectively for the entire range.

Revise the following attributes as shown:

Static access control list table: This attribute is a list that specifies one or more multicast group address ranges. Groups defined in this list are multicast on the associated UNI(s) unconditionally, that is, without the need for an IGMP join. The bandwidth of static multicast groups is not included in the current multicast bandwidth measurement maintained by the multicast subscriber monitor managed entity. If a join message is always expected, this table may be empty. Table entries have the same format as those in the dynamic access control list table. The preview fields are not meaningful. (R, W) (mandatory) (each row part: 24 bytes)

Lost groups list table: This attribute is a list of groups from the dynamic access control list table for which there is an active join, but no downstream flow is present, possibly because of source failure, but also possibly because of misconfiguration somewhere upstream. Be aware of possible ambiguity between overlapping service providers and IPv4/IPv6 addresses. After a join, the ONU should wait a reasonable time for upstream processing before declaring a group to be lost. Each entry is a vector of the following components:

– VLAN ID, 0 if not used (2 bytes)

– Source IP address, 0.0.0.0 if not used. In IPv6, this field captures only the four least significant bytes. (4 bytes)

– Multicast destination IP address. In IPv6, this field captures only the four least significant bytes. (4 bytes)

(R) (optional) (10N bytes)

Query interval: This attribute specifies the interval between general queries in seconds. The value 0 specifies that the ONU use its own default, which may or may not be the same as the recommended default of 125 seconds. (R, W, Set-by-create) (optional) (4 bytes)

Query max response time: This attribute is the max response time added by the proxy into general query messages directed to UNIs. It is expressed in tenths of seconds. The value 0 specifies that the ONU use its own default, which may or may not be the same as the recommended default of 100 (10 seconds). (R, W, Set-by-create) (optional) (4 bytes)

Exhibit 1022
IPR2024-00899, USPN 9,806,892
30 of 86

Add the following new attribute:

Downstream IGMP and multicast TCI: This attribute controls the downstream tagging of both the IGMP/MLD and multicast frames. If the first byte of this attribute is non-zero, a possible extended VLAN tagging operation ME is ignored for downstream IGMP/MLD and multicast frames. (R, W, Set-by-create) (optional) (3 byte**s**)

The first byte defines the control type:

Value	Meaning
0	Pass downstream IGMP/MLD and multicast traffic transparently, neither stripping nor modifying tags that may be present.
1	Strip the outer VLAN tag (including P bits) from downstream IGMP/MLD and multicast traffic.
2	Add a tag onto downstream IGMP/MLD and multicast traffic. The new tag is specified by the second and third bytes of this attribute.
3	Replace the tag on downstream IGMP/MLD and multicast traffic. The new tag is specified by the second and third bytes of this attribute.
4	Replace only the VLAN ID on downstream IGMP/MLD and multicast traffic, retaining the original DEI and P bits. The new VLAN ID is specified by the VLAN ID field of the second and third bytes of this attribute.
5	Add a tag onto downstream IGMP/MLD and multicast traffic. The new tag is specified by the VID (UNI) field of the multicast service package table row of the multicast subscriber config info ME that is associated with this profile. If the VID (UNI) field is unspecified (0xFFFF) or specifies untagged traffic, the new tag is specified by the second and third bytes of this attribute.
6	Replace the tag on downstream IGMP/MLD and multicast traffic. The new tag is specified by the VID (UNI) field of the multicast service package table row of the multicast subscriber config info ME that is associated with this profile. If the VID (UNI) field specifies untagged traffic, the outer VLAN tag (including P bits) is stripped from downstream IGMP/MLD and multicast traffic. If the value of the VID (UNI) is unspecified (0xFFFF), the new tag is specified by the second and third bytes of this attribute.
7	Replace only the VID on downstream IGMP/MLD and multicast traffic, retaining the original DEI and P bits. The new VLAN ID is specified by the VID (UNI) field of the multicast service package table row of the multicast subscriber config info ME that is associated with this profile. If the VID (UNI) field specifies untagged traffic, the outer VLAN tag (including P bits) is stripped from downstream IGMP/MLD and multicast traffic. If the value of the VID (UNI) is unspecified (0xFFFF), the new tag is specified by the second and third bytes of this attribute.

Other values are reserved.

The second and third bytes define the TCI (VLAN ID and P bits) to be applied on the downstream IGMP/MLD and multicast streams in case the replace or add option is selected.

Exhibit 1022
IPR2024-00899, USPN 9,806,892
31 of 86

9.3.28 Multicast subscriber config info

Add the following material at the end of the introductory text:

Through separate attributes, this ME supports either a single multicast operations profile in its backward compatible form, or a list of multicast operations profiles instead (the list may of course contain a single entry). The OLT can determine whether the ONU supports multiple profile capability by performing a get operation on the optional multicast service package table attribute, which exists only on ONUs that are prepared to support the feature.

Revise the multicast operations profile pointer attribute to read as follows:

Multicast operations profile pointer: This attribute points to an instance of the multicast operations profile. This attribute is ignored by the ONU if a non-empty multicast service package table attribute is present. (R,W, Set-by-create) (mandatory) (2 bytes)

Add the following new attributes:

Multicast service package table: This attribute is a list that specifies one or more multicast service packages. When the ONU receives an IGMP/MLD join request, it searches the multicast service package table in row key order, matching the VID (UNI) field (several rows can share the same VID). For each VID (UNI) match, the multicast operations profile pointer is used to access the ME that contains the attributes associated with the service package. The search stops when all requested multicast groups have been found and dealt with.

Each list entry is a vector of six components:

– **Table control (2 bytes)**

The first two bytes of each entry contain a key into the table. It is the responsibility of the OLT to assign and track table keys and content. Since row keys are created by the OLT, they may be densely or sparsely packed.

The two MSBs of this field determine the meaning of a set operation. These bits are returned as 00 during get next operations.

Bits 16..15	Meaning
00	Reserved
01	Write this entry into the table. Overwrite any existing entry with the same row key.
10	Delete this entry from the table. The remaining fields are not meaningful.
11	Clear all entries from the table. The remaining fields are not meaningful.

Bits 14..11 are reserved. Bits 10..1 are the row key itself.

– **VID (UNI)**. The value in this field is compared with the VID of upstream IGMP/MLD messages, and is used to decide whether to honour a join request. (2 bytes)

Exhibit 1022
IPR2024-00899, USPN 9,806,892
32 of 86

Values:

0..4095 – Matched against the VID of the IGMP/MLD message. 0 indicates a priority-tagged message, whose P bits are ignored.

4096 – Matches untagged IGMP/MLD messages only.

4097 – Matches tagged messages only, but ignores the value of the VID.

0xFFFF – Unspecified.

The VID (UNI) comparison occurs prior to any action defined by the upstream IGMP tag control attribute in an associated multicast operations profile (or alternatively, before any modification by a possible (extended) VLAN tagging operation configuration data ME).

– **Max simultaneous groups**. This field specifies the maximum number of dynamic multicast groups that may be replicated to the client port at any one time, for the multicast service package that is associated with this row. The value 0 specifies that no administrative limit is to be imposed. (2 bytes)

– **Max multicast bandwidth**. This field specifies the maximum imputed dynamic bandwidth, in bytes per second, that may be delivered to the client port at any one time, for the multicast service package that is associated with this row. The value 0 specifies that no administrative limit is to be imposed. (4 bytes)

NOTE – The port is also constrained by the global max simultaneous groups and max multicast bandwidth attributes of the multicast subscriber config info ME.

– M**ulticast operations profile pointer**. This field contains the ME ID of the multicast operations profile ME associated with this service package. (2 bytes)

– **Reserved** (8 bytes)

(R, W) (optional) (20N bytes, where N is the number of entries in the table)

Allowed preview groups table: This attribute is a list that specifies the preview groups that are currently allowed for the UNI associated with this ME. It is intended to support paid viewing of a multicast group that may or may not have been previewed.

When an IGMP/MLD join request is received, the order of search precedence is as follows:

1. Multicast operations profile(s), fully authorized groups
2. This attribute, the allowed preview groups table
3. Multicast operations profile(s), preview-only groups

If the first match is a group listed in this attribute, the ONU forwards the group to the UNI until the group is removed from this list, or until the subscriber leaves the group.

Each list entry begins with a table control field

Table control (2 bytes)

16	15	14	13	12	11	10	9	8	7	6	5	4	3	2	1
Set ctrl		Row part			Rsv	Row key									

Exhibit 1022
IPR2024-00899, USPN 9,806,892
33 of 86

The first two bytes of each entry contain a key into the table, as well as table management fields. It is the responsibility of the OLT to assign and track row keys and content.

Set ctrl

The two MSBs of this field determine the meaning of a set operation. These bits are returned as 00 during get next operations.

Bits 16..15	Meaning
00	Reserved
01	Write this entry into the table. Overwrite any existing entry with the same row part and row key.
10	Delete this entry from the table, including all row parts. The remaining fields are not meaningful.
11	Clear all entries from the table. The remaining fields are not meaningful.

Row part

The row part field allows the table to contain logical rows that exceed the maximum length of a single row. Table entries with the same row key and different row parts are understood to comprise a single extended row. In this managed entity, an extended row always contains two row parts.

The meaning of extended rows is defined below.

Bits 14..12	Meaning
000	The associated row operation is for part 0.
001	The associated row operation is for part 1.
010..111	Reserved

Rsv

This bit is reserved.

Row key

The row key identifies rows in the table. Row keys may be either densely or sparsely populated.

Exhibit 1022
IPR2024-00899, USPN 9,806,892
34 of 86

Row part format definition

Byte	Row part 0	Row part 1
1 2	Table control (2 bytes)	Table control (2 bytes)
3 4 5 6 7 8 9 10 11 12 13 14 15 16 17 18	Source IP address (16 bytes)	Destination IP address (16 bytes)
19 20	VLAN ID (ANI) (2 bytes)	Duration (2 bytes)
21 22	VLAN ID (UNI) (2 bytes)	Time left (2 bytes)

Figure 9.3.28-1 – Allowed preview groups row part formats

Row part 0 format:

– Table control (2 bytes)

– Source IP address. This field specifies the source IP address of the allowed preview group. May be either an IPv4 address (first twelve bytes 0) or an IPv6 address. (16 bytes)

– VLAN ID (ANI). This field specifies the VLAN carrying the multicast group downstream. The VLAN ID resides in the 12 least significant bits; the remaining bits are set to 0 and not used. The value 0 designates an untagged downstream flow. (2 bytes)

– VLAN ID (UNI). This field specifies the VLAN carrying IGMP/MLD messages upstream across the UNI. The VLAN ID resides in the 12 least significant bits; the remaining bits are set to 0 and not used. The value 0 designates an untagged upstream flow. (2 bytes)

Exhibit 1022
IPR2024-00899, USPN 9,806,892
35 of 86

Row part 1 format:

– Table control (2 bytes)

– Destination IP address. This field specifies the destination IP address of the allowed preview group. May be either an IPv4 address (first twelve bytes 0) or an IPv6 address. (16 bytes)

– Duration – This field indicates the static length of time in minutes for which the group is authorized. The value 0 designates unlimited authorization. (2 bytes)

– Time left – This field is controlled by the ONU (ignored during a set operation from OLT). It indicates how much time (measured in minutes) remains in the authorization. The ONU counts down; when this field reaches zero, the ONU deletes the entire entry from the table and stops replicating the group to the UNI. If the duration field specifies unlimited authorization, this field is ignored. The OLT may extend (or even truncate) the authorization by writing a new value into the duration field; the difference between new and old duration values is added to the time left field. (2 bytes)

(R, W) (optional) (Each row part: 22 bytes)

Revise the Actions to read as follows:

Create, delete, get, get next, set

Set table (optional)

9.3.29 Multicast subscriber monitor

Change the name and revise the description of the active group list table as shown:

IPv4 active group list table: This attribute lists the groups from one of the related dynamic access control list tables or the allowed preview groups table that are currently being actively forwarded, along with the actual bandwidth of each. If a join has been recognized from more than one IPv4 source address for a given group on this UNI, there will be one table entry for each. Each table entry has the form:

Add the following new attribute:

IPv6 active group list table: This attribute lists the groups from one of the related dynamic access control list tables or the allowed preview groups table that are currently being actively forwarded, along with the actual bandwidth of each. If a join has been recognized from more than one IPv6 source address for a given group on this UNI, there will be one table entry for each. In mixed IPv4-IPv6 scenarios, it is possible that some fields might be IPv4, in which case their twelve most significant bytes of the given field are set to zero. Each table entry has the form:

– VLAN ID, 0 if not used (2 bytes)

– Source IP address, 0 if not used (16 bytes)

– Multicast destination IP address (16 bytes)

– Best efforts actual bandwidth estimate, bytes per second (4 bytes)

Exhibit 1022
IPR2024-00899, USPN 9,806,892
36 of 86

– Client (set-top box) IP address, that is, the IP address of the device currently joined (16 bytes)

– Time since the most recent join of this client to the IP channel, in seconds (4 bytes)

(R) (optional) (58N bytes)

9.3.33 MAC bridge port ICMPv6 process preassign table

Add the following new text as a new clause 9.3.33:

This managed entity provides an approach to ICMPv6 message processing configuration to those ONUs that support IPv6 awareness. For every message, the MAC bridge port ICMPv6 process preassign table can designate a forward, discard or snoop operation. The ONU creates or deletes an instance of this managed entity automatically upon creation or deletion of a MAC bridge port configuration data ME.

The MAC bridge port ICMPv6 process preassign table ME filters layer 2 traffic between UNI and ANI. The operation of this ME is completely independent of the operation and traffic generated or received by a possible IPv6 host config data ME.

Relationships

An instance of this managed entity is associated with an instance of a MAC bridge port configuration data managed entity.

Attributes

Managed entity id: This attribute uniquely identifies each instance of this managed entity. Through an identical ID, this managed entity is implicitly linked to an instance of the MAC bridge port configuration data ME. (R) (mandatory) (2 bytes)

The following nine attributes have similar definitions. Each permits the OLT to specify ICMPv6 as the next header in the IPv6 header and various types in the ICMPv6 header, and whether traffic of the specified type is forwarded, discarded or snooped, in upstream and downstream directions separately. The bits of each attribute are assigned as follows:

Bit	Name	Setting
1..2 (LSB)	Process for upstream	00: forward 01: discard 10: snoop
3..4	Process for downstream	00: forward 01: discard 10: snoop
5..8	Reserved	0

Exhibit 1022
IPR2024-00899, USPN 9,806,892
37 of 86

The initial value of each attribute is given in the last column of the table.

#	Protocol	Next header	type	Standard	Initial value
1	ICMPv6 error messages	58	1-4	[b-IETF RFC 2460] [b-IETF RFC 2463]	0
2	ICMPv6 informational messages	58	128,129	[b-IETF RFC 2460] [b-IETF RFC 2463]	0
3	Neighbour discovery router solicitation	58	133	[b-IETF RFC 2460] [b-IETF RFC 4861]	6
4	Neighbour discovery – router advertisement	58	134	[b-IETF RFC 2460] [b-IETF RFC 4861]	9
5	Neighbour discovery – neighbour solicitation	58	135	[b-IETF RFC 2460] [b-IETF RFC 4861]	0
6	Neighbour discovery – neighbour advertisement	58	136	[b-IETF RFC 2460] [b-IETF RFC 4861]	0
7	Neighbour discovery – redirect	58	137	[b-IETF RFC 2460] [b-IETF RFC 4861]	1
8	MLD – Multicast listener query (MLDv1, MLDv2)	58	130	[b-IETF RFC 2710] [IETF RFC 3810]	1
9	Unknown ICMPv6	58	–	–	5

ICMPv6 error messages processing: (R, W) (mandatory) (1 byte)

ICMPv6 informational messages processing: (R, W) (mandatory) (1 byte)

Router solicitation processing: (R, W) (mandatory) (1 byte)

Router advertisement processing: (R, W) (mandatory) (1 byte)

Neighbour solicitation processing: (R, W) (mandatory) (1 byte)

Neighbour advertisement processing: (R, W) (mandatory) (1 byte)

Redirect processing: (R, W) (mandatory) (1 byte)

Multicast listener query processing: (R, W) (mandatory) (1 byte)

NOTE – If the ONU participates in multicast services, MLD queries should be controlled through the multicast operations profile ME. In such a case, it is strongly recommended not to provision the downstream direction of the multicast listener query processing attribute to any value other than forwarding.

Unknown ICMPv6 processing: (R, W) (mandatory) (1 byte)

Actions

Get, set

Exhibit 1022
IPR2024-00899, USPN 9,806,892
38 of 86

9.4.1 IP host config data

Revise the introductory text to read as shown:

The IP host config data configures IPv4 based services offered on the ONU. The ONU automatically creates instances of this managed entity if IP host services are available. A possible IPv6 stack is supported through the IPv6 host config data managed entity. In this clause, references to IP addresses are understood to mean IPv4.

Revise the following attribute as shown:

Managed entity id: This attribute uniquely identifies each instance of this managed entity. The ONU creates as many instances as there are independent IPv4 stacks on the ONU. To facilitate discovery, IP host config data MEs should be numbered from 0 upward. The ONU should create IP(v4) and IPv6 host config data MEs with separate ME IDs, such that other MEs can use a single TP type attribute to link with either. (R) (mandatory) (2 bytes)

9.4.2 IP host performance monitoring history data

Revise existing text to read as shown:

Relationships

An instance of this managed entity is associated with an instance of the IP host config data or IPv6 host config data managed entity.

Attributes

Managed entity id: This attribute uniquely identifies each instance of this managed entity. Through an identical ID, this managed entity is implicitly linked to an instance of the IP host configuration data or IPv6 host configuration data ME. (R, Set-by-create) (mandatory) (2 bytes)

9.4.3 TCP/UDP config data

Revise existing text to read as shown:

Relationships

One or more instances of this managed entity may be associated with an instance of an IP host config data or IPv6 host config data managed entity.

Attributes

IP host pointer: This attribute points to the IP host config data or IPv6 host config data ME associated with this TCP/UDP data. Any number of ports and protocols may be associated with an IP host. (R, W, Set-by-create) (mandatory) (2 bytes)

9.4.5 IPv6 host config data

Add the following new ME:

The IPv6 host config data configures IPv6 based services offered on the ONU. The ONU automatically creates instances of this managed entity if IPv6 host services are available. If an IPv4 stack is present, it is independently supported through the IP host config data managed entity.

This ME may be statically provisioned or may derive its parameters from router advertisements and/or DHCPv6.

Exhibit 1022
IPR2024-00899, USPN 9,806,892
39 of 86

Relationships

One or more instances of this managed entity are associated with the ONU managed entity. Any number of TCP/UDP config data MEs can point to the IPv6 host config data, to model any number of ports and protocols. Performance may be monitored through an implicitly linked IP host PM history data ME.

Attributes

Managed entity id: This attribute uniquely identifies each instance of this managed entity. The ONU creates as many instances as there are independent IP stacks on the ONU. To facilitate discovery, IP and IPv6 host config data MEs should be numbered from 0 upward. The ONU must create IP(v4) and IPv6 host config data MEs with separate ME IDs, such that other MEs can use a single TP type attribute to link with either. (R) (mandatory) (2 bytes)

IP options: This attribute is a bit map that enables or disables IPv6 related options. The value 1 enables the option, while 0 disables it. The default value of this attribute is 0. (R, W) (mandatory) (1 byte)

0x01	IPv6 stack administrative unlock.
0x02	Enable RS. The host generates router solicitation (RS) messages, if necessary, and responds to router advertisements. If the router advertisement (RA) message has the M flag set to 1, the ONU is expected to request address and other configuration information via DHCPv6. If the RA message has the O flag set to 1 and M to 0, the ONU is expected to only request additional configuration information via DHCPv6, but not addresses.
0x04	Enable DHCPv6.
0x08	Respond to pings (ICMPv6 echo replies).
0x10..0x80	Reserved.

The following IP stack initialization flow is expected:

1. If the IPv6 stack is administratively unlocked (0x01), establish a link-local address (self-assign address, DAD to confirm that address is unique within the local link). This process is defined in [b-IETF RFC 4862], and is a part of SLAAC. However, no IP options are set to enable or disable this function – it always happens.
2. If RS and DHCPv6 are both disabled, do nothing. Manual settings are to be used and are required for this IPv6 stack to be fully functional.
3. If RS is enabled (0x02) and DHCPv6 is disabled, send RS and listen for RA. If no RA is received, the ONU never attempts DHCPv6 and cannot complete automated initialization of IPv6. If RA is received:
    a. The ONU builds its default router table per [b-IETF RFC 4861], reported via the current default router table attribute.
    b. If the received RA includes prefix information option(s) with "A" prefix, then ONU assigns itself an address from all such A prefixes, per [b-IETF RFC 4862] (also part of SLAAC) (reported via the current address table attribute).

Exhibit 1022
IPR2024-00899, USPN 9,806,892
40 of 86

c. If the received RA includes DNS information [b-IETF RFC 6106], the ONU accepts it (reported via the current DNS table attribute). Support for RFC 6106 is strongly recommended.

d. If the received RA has M = 1, then the ONU requests IA_NA and other options (which could include DNS) via DHCPv6. The access network provider is responsible to ensure that, if it sends DNS both in RA and DHCPv6, it sends the same DNS information; it must not rely on the ONU to figure out whether RA DNS is preferred over DHCPv6 DNS, or vice versa. If different DNS information is received via DHCPv6, it also goes into the current DNS table attribute. If the ONU gets IA_NA via DHCPv6, this goes into the current address table attribute.

e. If the received RA has M = 0 and O = 1, then the ONU requests stateless options (which could include DNS) via DHCPv6.

4. If RS and DHCPv6 are both enabled, the ONU does RS (as described in a-c above, if RA is received) and DHCPv6 (requesting IA_NA and other options, as described in d above) simultaneously, effectively ignoring M and O flags.

5. If RS is disabled and DHCPv6 is enabled, then the ONU does not send RS and it does send DHCPv6 (requesting IA_NA and other options, as described in d above). If an unsolicited RA is received, it is ignored.

MAC address: This attribute indicates the MAC address used by the IP node. (R) (mandatory) (6 bytes)

Onu identifier: A unique ONU identifier string. If set to a non-null value, this string is used instead of the MAC address in retrieving DHCPv6 parameters. If the string is shorter than 25 characters, it must be null terminated. Its default value is 25 null bytes. (R, W) (mandatory) (25 bytes)

Several attributes of this managed entity may be paired together into two categories, manual settings and current values.

Manual settings	Current values
IPv6 address	Current address table
Default router	Current default router table
Primary DNS	Current DNS table
Secondary DNS	
On-link prefix	Current on-link prefix table

While this ME instance is administratively locked, it provides no IPv6 connectivity to the external world. Especially if manual provisioning is to be used, it is important that the ME remain locked until provisioning is complete.

While autoconfiguration is disabled, the current values are the same as the manual settings. While autoconfiguration is enabled, the current values are those autoconfigured on the basis of router advertisements, assigned by DHCPv6, or undefined (empty tables) if no values have (yet) been assigned.

Exhibit 1022
IPR2024-00899, USPN 9,806,892
41 of 86

IPv6 link local address: The address used for on-link IP host services, such as router solicitation and DHCPv6. [b-IETF RFC 4862] specifies how to automatically establish a link-local address. (R) (mandatory) (16 bytes)

IPv6 address: The manually provisioned IPv6 address used for routed IPv6 host services. The address remains valid until reprovisioned, that is, the preferred and valid lifetimes of this address are infinite. The default value of this attribute is the undefined address 0. (R, W) (mandatory) (16 bytes)

Default router: The manually provisioned IPv6 address of the default router. The default value of this attribute is the undefined address 0. (R, W) (mandatory) (16 bytes)

Primary DNS: The manually provisioned IPv6 address of the primary DNS server. The default value of this attribute is the undefined address 0. (R, W) (mandatory) (16 bytes)

Secondary DNS: The manually provisioned IPv6 address of the secondary DNS server. The default value of this attribute is the undefined address 0. (R, W) (mandatory) (16 bytes)

Current address table: This attribute is a list of the current IPv6 addresses of the IP host service. The link-local address does not appear in this table. Each row of the table is structured as follows:

IP address (16 bytes)

Preferred lifetime remaining, seconds (4 bytes)

Valid lifetime remaining, seconds (4 bytes)

If the manually provisioned IPv6 address attribute appears as the (only, by necessity) entry of the table, its preferred and valid lifetimes are infinite (0xFFFF FFFF).

(R) (mandatory) (24*N* bytes)

Current default router table: This attribute lists the IPv6 addresses of the current default routers. (R) (mandatory) (16*N* bytes)

Current DNS table: This attribute lists the IPv6 addresses of the current DNS servers. (R) (mandatory) (16*N* bytes)

DUID: This attribute is the DHCPv6 unique identifier. It is an octet string that must be globally unique and must remain stable over the lifetime of the ONU. If the string is shorter than 25 bytes, it must be null terminated. Its derivation is beyond the scope of this recommendation; see [b-IETF RFC 3315] for further definition. (R) (mandatory) (25 bytes)

On-link prefix: This attribute is the manually provisioned on-link prefix used for destination IPv6 addresses of IPv6 host services. The attribute is structured as follows:

Prefix length, number of leading bits in the prefix that are valid (1 byte)

Prefix (16 bytes)

(R,W) (optional) (17 bytes)

Exhibit 1022
IPR2024-00899, USPN 9,806,892
42 of 86

Current on-link prefix table: In IPv6, an address is on a specific link if the address has been assigned to an interface attached to that link. However, in order for a node to know that a destination is on-link, it must obtain configuration information to that effect. A host maintains a prefix list that identifies ranges of addresses that are to be considered on-link ([b-IETF RFC 5942]). This attribute is a list of current on-link prefixes used for destination IPv6 addresses of IPv6 host services. Entries in this table come from RA messages received by the ONU from remote routers or manually provisioned to be on-link. Each row of the table is structured as follows:

Prefix length, number of leading bits in the prefix that are valid (1 byte)

Autonomous address-configuration flag byte. When set to 1, indicates that this prefix can be used for stateless address configuration as specified in [b-IETF RFC 4862]; otherwise 0. (1 byte)

Prefix (16 bytes)

Preferred lifetime, seconds (4 bytes)

Valid lifetime, seconds (4 bytes)

If the manually provisioned on-link prefix attribute is present in the current on-link prefix table, its preferred and valid lifetimes are infinite (0xFFFF FFFF), and its autonomous address-configuration flag is 0.

(R) (optional) (26*N* bytes)

Actions

Get, set

Test: Invoke an ICMP message from this IP host. The test message can be configured to generate a ping or traceroute. Annex A defines the test, test response and test result messages.

Notifications

Attribute value change

Number	Attribute value change	Description
1..8	N/A	
9	Current address table	AVC generated when a new address is added to the table, or when an existing address becomes invalid and is removed from the table. Countdown of the lifetime fields does not generate AVCs.
10	Current default router table	
11	Current DNS table	
12..13	N/A	
14	Current on-link prefix table	
15..16	Reserved	

Exhibit 1022
IPR2024-00899, USPN 9,806,892
43 of 86

9.7.1 Physical path termination point xDSL UNI part 1

Add the following new attribute:

Network specific extensions pointer: This attribute points to a network address managed entity that contains the path and name of a file containing network specific parameters for the associated UNI. Upon ME instantiation, the ONU sets this attribute to 0xFFFF, a null pointer. (R, W) (optional) (2 bytes)

Add the following new alarm and adjust the reserved space accordingly:

Alarm

Number	Alarm	Description
16	File not found	The PPTP xDSL UNI attempted to access a network specific extensions file that is not available.
17..207	Reserved	

9.7.3 xDSL line configuration profile part 1

Add clarification text as follows:

Minimum overhead rate upstream: This attribute specifies the minimum rate of the message based overhead to be maintained by the xTU in the upstream direction. MSGMINus ranges from 4000 to 248 000 bit/s. The value 0 specifies that the ONU use its internal default. This attribute is only valid for [ITU-T G.992.3], [ITU-T G.992.4], [ITU-T G.992.5] and [ITU-T G.993.2]. (R, W, Set-by-create) (optional) (2 bytes)

Minimum overhead rate downstream: This attribute specifies the minimum rate of the message based overhead to be maintained by the xTU in the downstream direction. MSGMINds ranges from 4000 to 248 000 bit/s. The value 0 specifies that the ONU use its internal default. This attribute is only valid for [ITU-T G.992.3], [ITU-T G.992.4], [ITU-T G.992.5] and [ITU-T G.993.2]. (R, W, Set-by-create) (optional) (2 bytes)

9.7.26 VDSL2 line configuration extensions 2

Add clarification text as follows:

SOS CRC threshold downstream: The SOS-CRC-ds attribute is the minimum number of normalized CRC anomalies received in SOS-TIME-ds seconds in order to arm the second sub-condition of the standard SOS triggering criteria (see clause 13.4.3.2 of [ITU-T G.993.2]) in the downstream direction. The valid range of SOS-CRC values is 0.02 to $(2^{16}-1)*0.02$, in steps of 0.02. The value 0 specifies that the ONU use its internal default. (R, W, Set-by-create) (optional) (2 bytes)

SOS CRC threshold upstream: The SOS-CRC-us attribute is the minimum number of normalized CRC anomalies received in SOS-TIME-us seconds in order to arm the second sub-condition of the standard SOS triggering criteria (see clause 13.4.3.2 of [ITU-T G.993.2]) in the upstream direction. The valid range of SOS-CRC values is 0.02 to $(2^{16}-1)*0.02$, in steps of 0.02. The value 0 specifies that the ONU use its internal default. (R, W, Set-by-create) (optional) (2 bytes)

Exhibit 1022
IPR2024-00899, USPN 9,806,892
44 of 86

9.8.7 Pseudowire maintenance profile

Add clarification text as follows:

SES threshold: Number of lost, malformed or otherwise unusable packets expected in the PSN to TDM direction within a one-second interval that causes a severely errored second to be counted. Stray packets do not count toward a severely errored second, nor do packets whose L bit is set at the far end. The value 0 specifies that the ONU use its internal default, which is not necessarily the same as the recommended default value 3. (R, W, Set-by-create) (optional) (2 bytes)

9.8.14 MPLS pseudowire termination point

Change the status from optional to mandatory:

Pseudowire type: This attribute specifies the emulated service to be carried over this PW. The values are from [IETF RFC 4446].

<no change to the list of code points>

(R, W, Set-by-create) (mandatory) (2 bytes)

9.8.15 PW ATM configuration data

Modify the following attributes as indicated below:

Far end max cell concatenation: This attribute specifies the maximum number of ATM cells that can be concatenated into one PW packet as provisioned at the far end. This attribute may be used for error checking of downstream traffic. The value 0 specifies that the ONU use its internal default. (R, W, Set-by-create) (optional) (2 bytes)

ATM CLP QoS mapping: This attribute specifies whether the cell loss priority (CLP) bits should be considered when setting the value in the quality of service fields of the encapsulating protocol (e.g., TC fields of the MPLS label stack).

1 ATM CLP bits mapping to quality of service fields of the encapsulating protocol.

2 Not applicable.

The value 0 specifies that the ONU use its internal default. (R, W, Set-by-create) (optional) (1 byte)

Timeout mode: This attribute specifies whether or not a packet is transmitted in the upstream direction based on timeout expiration for collecting cells. The actual handling of the timeout is implementation specific; as such, this attribute may be changed at any time with proper consideration of the traffic disruption effect.

1 Disabled. The ONU does not generate packets based on timeout cells.

2 Enabled. The ONU generates packets based on timeout cells.

The value 0 specifies that the ONU use its internal default. (R, W, Set-by-create) (optional) (1 byte)

Exhibit 1022
IPR2024-00899, USPN 9,806,892
45 of 86

9.9.1 Physical path termination point POTS UNI

Modify the following attributes as indicated below (shutting down state and text to describe directionality are new):

Administrative state: This attribute shuts down (2), locks (1) and unlocks (0) the functions performed by this managed entity. In case the administrative state is set to shut down while the POTS UNI line state is non-idle, no action is taken until the POTS UNI line state changes to idle, whereupon the administrative state changes to locked. In case the administrative state is set to shut down and the POTS UNI line state is already idle, the administrative state is immediately set to locked. In both cases, the transition from shutting down to locked state is signalled with an AVC.

When the administrative state is set to lock, all user functions of this UNI are blocked, and alarms, TCAs and AVCs for this managed entity and all dependent managed entities are no longer generated. Selection of a default value for this attribute is outside the scope of this recommendation. (R, W) (mandatory) (1 byte)

Rx gain: This attribute specifies a gain value for the received signal in the form of a 2s complement number. Valid values are -120 (-12.0 dB) to 60 (+6.0 dB). The direction of the affected signal is in the D to A direction, toward the telephone set. Upon ME instantiation, the ONU sets this attribute to 0. (R, W) (optional) (1 byte)

Tx gain: This attribute specifies a gain value for the transmit signal in the form of a 2s complement number. Valid values are -120 (-12.0 dB) to 60 (+6.0 dB). The direction of the affected signal is in the A to D direction, away from the telephone set. Upon ME instantiation, the ONU sets this attribute to 0. (R, W) (optional) (1 byte)

Add the following new attribute at the end of the list:

Nominal feed voltage: This attribute indicates the designed nominal feed voltage of the POTS loop. It is an absolute value with resolution 1 Volt. This attribute does not represent the actual voltage measured on the loop, which is available through the test command. (R, W) (optional) (1 byte)

Modify the Notification table as follows:

Attribute value change

Number	Attribute value change	Description
1	Administrative state	The only change that is signalled with an AVC is the transition from shutting down to locked
2	N/A	
3	ARC	ARC timer expiration
4..8	N/A	
9	Op state	Operational state
10..11	N/A	
12..16	Reserved	

Exhibit 1022
IPR2024-00899, USPN 9,806,892
46 of 86

9.9.2 SIP user data

Revise the following attribute description as shown:

ROH timer: This attribute defines the time in seconds for the receiver off hook condition before ROH tone is applied. The value 0 disables ROH timing. The value 0xFF specifies that the ONU is to use its internal default, which may or may not be the same as the 15 second OMCI default value. (R, W) (optional) (1 byte)

9.9.3 SIP agent config data

Revise the DNS attribute descriptions as shown:

Primary SIP DNS: This attribute specifies the primary SIP DNS IP address. If the value of this attribute is 0, the primary DNS server is defined in the corresponding IP host config data or IPv6 host config data ME. If the value is non-zero, it takes precedence over the primary DNS server defined in the IP host config data or IPv6 host config data ME. (R, W, Set-by-create) (mandatory) (4 bytes)

Secondary SIP DNS: This attribute specifies the secondary SIP DNS IP address. If the value of this attribute is 0, the secondary DNS server is defined in the corresponding IP host config data or IPv6 host config data ME. If the value is non-zero, it takes precedence over the secondary DNS server defined in the IP host config data or IPv6 host config data ME. (R, W, Set-by-create) (mandatory) (4 bytes)

9.9.6 Voice service profile

Add clarification text as follows:

Jitter buffer max: This attribute specifies the maximum depth of the jitter buffer associated with this service in milliseconds. The value 0 specifies that the ONU use its internal default. (R, W, Set-by-create) (optional) (2 bytes)

PSTN protocol variant: This attribute controls which variant of POTS signalling is used on the associated UNIs. Its value is equal to the [ITU-T E.164] country code. The value 0 specifies that the ONU use its internal default. (R, W, Set-by-create) (optional) (2 bytes)

Add the following new attribute:

Network specific extensions pointer: This attribute points to a network address managed entity that contains the path and name of a file containing network specific parameters for the associated UNIs. The default value for this attribute is 0xFFFF, a null pointer. (R, W, Set-by-create) (optional) (2 bytes)

Add the following new alarm and adjust the reserved space accordingly:

Notifications

Alarm

Number	Alarm	Description
1	File not found	The voice service profile attempted to access a network specific extensions file that is not available.
2..207	Reserved	

Exhibit 1022
IPR2024-00899, USPN 9,806,892
47 of 86

9.9.7 RTP profile data

Modify the description of the local port max attribute as shown:

Local port max: This attribute defines the highest RTP port used for voice traffic. The value must be greater than local port min. The value 0 specifies that the local port max be equal to the local port min. (R, W, Set-by-create) (optional) (2 bytes)

9.9.11 VoIP line status

Modify the description of the VoIP codec used attribute as shown:

Voip codec used: Reports the current codec used for a VoIP POTS port. Valid values are taken from [IETF RFC 3551], and are the same as specified in the codec selection attribute of the VoIP media profile. This attribute is meaningful only if the VoIP port session type attribute is not idle.

Add code point 15 to the VoIP voice server status attribute:

Voip voice server status: Status of the VoIP session for this POTS port:

0	None/initial
1	Registered
2	In session
3	Failed registration – icmp error
4	Failed registration – failed tcp
5	Failed registration – failed authentication
6	Failed registration – timeout
7	Failed registration – server fail code
8	Failed invite – icmp error
9	Failed invite – failed tcp
10	Failed invite – failed authentication
11	Failed invite – timeout
12	Failed invite – server fail code
13	Port not configured
14	Config done
15	Disabled by switch

(R) (mandatory) (1 byte)

Exhibit 1022
IPR2024-00899, USPN 9,806,892
48 of 86

Clarify the code point descriptions of the following attribute, to read as follows:

Voip port session type: This attribute reports the current state of a VoIP POTS port session:

0 Idle/none

1 2way

2 3way

3 Fax/modem

4 Telemetry

5 Conference

(R) (mandatory) (1 byte)

Add the following new attribute.

Voip line state: This attribute reports the state of the POTS line. This attribute may not be meaningful if the POTS port is administratively locked, is operationally disabled, or is being tested. Code points are assigned as follows:

0 Idle, on-hook

1 Off-hook dial tone

2 Dialling

3 Ringing or FSK alerting/data

4 Audible ringback

5 Connecting

6 Connected

7 Disconnecting, audible indication

8 Receiver off hook (ROH), no tone

9 ROH with tone

10 Unknown or undefined

(R) (optional) (1 byte)

Exhibit 1022
IPR2024-00899, USPN 9,806,892
49 of 86

11 ONU management and control protocol

11.2.4 Managed entity identifier

Add the following new entries to Table 11.2.4-1 and adjust the reserved space accordingly.

Table 11.2.4-1 – Managed entity identifiers

Managed entity class value	Managed entity
343	Energy consumption performance monitoring history data
344	XG-PON TC performance monitoring history data
345	XG-PON downstream management performance monitoring history data
346	XG-PON upstream management performance monitoring history data
347	IPv6 host config data
348	MAC bridge port ICMPv6 process preassign table
349-65279	Reserved for future standardization
65280-65535	Reserved for vendor specific use

11.2.5 Message contents length, extended message format

Replace the text of clause 11.2.5 with the following:

These two bytes contain the length, in bytes, of the message contents field. Its value lies between 0 and 1966, for a 1980-byte PDU limit.

Eleven bits suffice to specify this range. The five most significant bits of this field are reserved for future use.

From time to time, new parameters may be added to OMCI messages. The rules for the extended message set are as follows:

- For backward compatibility, any new field must be added at the end of the OMCI message, must be optional (and be documented as such), with default value 0 that has backward compatible semantics.
- Trailing optional fields in a message may be omitted or included at the option of the transmitting device. The transmitting device sets the message contents length field accordingly.
- The receiving device should not reject the message on grounds of unexpected message contents length.
- A receiving device that does not support the optional trailing fields should ignore them.
- The OLT must be prepared to accept a response based on the premise that the ONU does not support the optional fields, whether the optional fields are in the transmitted command message or in the received response message or both. In such a case, the value in the received response message contents length field will be lower than expected.

Replace clauses A.2.21.1, A.2.21.2 and A.2.21.3 as indicated below:

Annex A – OMCI message syntax and common features

…

Exhibit 1022
IPR2024-00899, USPN 9,806,892
50 of 86

A.2 Extended message set

A.2.21 Test

A.2.21.1 Format for ONU-G, ANI-G, RE ANI-G, PPTP RE UNI, RE upstream amplifier, RE downstream amplifier and circuit pack entity classes

Field	Byte	8	7	6	5	4	3	2	1	Comments
Transaction correlation identifier	1-2									
Message type	3	0	1	0						DB = 0, AR = 1, AK = 0 bits 5-1: action = test
Device identifier	4	0	0	0	0	1	0	1	1	Extended OMCI = 0x0B
Managed entity identifier	5-6									Entity class NOTE – This format applies to entity classes ONU-G, ANI-G, RE ANI-G, PPTP RE UNI, RE upstream amplifier, RE downstream amplifier and circuit pack.
	7-8									Entity instance
Message contents length	9-10									Size of message contents field
Message contents	11	0	0	0	0	x	x	x	x	xxxx = select test 0000..0110 Reserved for future use 0111 Self test 1000..1111 Vendor-specific use. See description related to the test result message.
	12-13									Pointer to a general purpose buffer ME, used to return vendor-specific test results. This field is optional. The OLT may include this field, or in case it is not used, set it to zero. If the following field is not used or not supported, the OLT may omit both fields. The ONU should accept either option, ignoring the field if it does not support the feature.
	14-15									Pointer to an octet string ME, used to define the vendor-specific test parameters. This field is optional. The OLT may include this field, or in case it is not used, omit it or set it to zero. The ONU should accept either option, ignoring the field if it does not support the feature.
MIC										Message integrity check

Exhibit 1022
IPR2024-00899, USPN 9,806,892
51 of 86

A.2.21.2 Format for IP host config data and IPv6 host config data entity classes

Field	Byte	8	7	6	5	4	3	2	1	Comments
Transaction correlation identifier	1-2									
Message type	3	0	1	0						DB=0, AR=1, AK=0 Bits 5-1: action=test
Device identifier	4	0	0	0	0	1	0	1	1	Extended OMCI = 0x0B
Managed entity identifier	5-6									Entity class NOTE – This format applies to entity classes IP host config data and IPv6 host config data.
	7-8									Entity instance
Message contents length	9-10									Size of message contents field – 5 bytes (IPv4 address) or 17 bytes (IPv6 address)
Message contents	11	0	0	0	0	x	x	x	x	xxxx = select test 0001 Ping 0010 Traceroute 0010..0111 Reserved 1000..1111 Vendor-specific use. The ICMP message is intended to be sent from the ONU upstream toward the network. See discussion related to the test result message.
	12-15									Option 1: IPv4 address of target
	12-27									Option 2: IPv6 address of target
MIC										Message integrity check

A.2.21.3 Format for PPTP POTS UNI entity class

The test message for POTS UNIs supports two basic categories of test operation, a defined set of tests that look in and out from the POTS port, and a set of code points that may be used for vendor-specific tests. The latter category is further subdivided into code points that return test results in a general purpose buffer ME, using the test result message primarily as an event trigger to signal test completion, and code points that return all test results in an ordinary test result message. If it is needed, the OLT must create the general purpose buffer managed entity before initiating the test action.

Note that a single message can be used to initiate multiple tests on a given ME if desired.

Bytes 12-25 are used by the dial tone make-break test. A zero value for a timer causes the ONU to use its built-in defaults. As many as three dial tone frequencies can be specified, or omitted by setting their values to 0. Other fields are also omitted with the value 0, or controlled by flags. An ONU can support the dial tone test with internal defaults only, and is not required to support any of the attributes of bytes 12-25. Likewise, an ONU can use internal defaults for drop test, rather than the values given in bytes 26-35. The capabilities of an ONU are documented by the vendor and known through administrative practices.

Several distinct test classes are defined.

Exhibit 1022
IPR2024-00899, USPN 9,806,892
52 of 86

Field	Byte	8	7	6	5	4	3	2	1	Comments
Transaction correlation identifier	1-2									
Message type	3	0	1	0						DB = 0, AR = 1, AK = 0 Bits 5-1: action = test
Device identifier	4	0	0	0	0	1	0	1	1	Extended OMCI = 0x0B
Managed entity identifier	5-6									Entity class NOTE – This format applies to entity class PPTP POTS UNI.
	7-8									Entity instance
Message contents length	9-10									Size of message contents field
Message contents	11	x	0	t	t	x	x	x	x	tt selects one of the POTS test class formats 0 MLT, dial tone make-break 1 SIP/H.248 test call 2..3 Reserved x Bits reserved for use in specific test classes as defined below

Test class 0:

Field	Byte	8	7	6	5	4	3	2	1	Comments
Message contents	11	a	0	0	0	x	x	x	x	a – test mode 0 normal; deny test if line busy 1 forced mode xxxx = select test 0000 all MLT tests 0001 hazardous potential 0010 foreign EMF 0011 resistive faults 0100 receiver off-hook 0101 ringer 0110 NT1 dc signature test 0111 self test 1000 dial tone make-break test 1001..1011 vendor-specific test, all results returned in test results message 1100..1111 vendor-specific test, test results returned in general purpose buffer ME. The ONU should deny a test operation command in this range if bytes 36..37 do not point to a GP buffer.
	12									DBDT timer T1 (slow dial tone threshold), in units of 0.1 seconds. Range 0.1 to 6.0 seconds.

Exhibit 1022
IPR2024-00899, USPN 9,806,892
53 of 86

Field	Byte	8	7	6	5	4	3	2	1	Comments
	13									DBDT timer T2 (no dial tone threshold), in units of 0.1 seconds. Range 1.0 to 10.0 seconds.
	14									DBDT timer T3 (slow break dial tone threshold), in units of 0.1 seconds. Range 0.1 to 3.0 seconds.
	15									DBDT timer T4 (no break dial tone threshold), in units of 0.1 seconds. Range 1.0 to 3.0 seconds.
	16							d	p	DBDT control byte d: dialled digit 1 dialled digit specified in byte 17 0 use default digit p = pulse (1) or tone (0) dialling
	17									Digit to be dialled, ASCII character in range "0"-"9", "*", "#".
	18-19									Dial tone frequency 1, in units of Hz
	20-21									Dial tone frequency 2, in units of Hz. 0 = unused (i.e., if only one tone is specified).
	22-23									Dial tone frequency 3, in units of Hz. 0 = unused (i.e., if only one or two tones are specified).
	24									Dial tone power threshold, absolute value, 0.1 dB resolution, range [–]0.1 to [–]25.3 dBm0. E.g., –13 dBm0 = 0x82. 0 = unspecified.
	25									Idle channel power threshold, absolute value, 1 dB resolution, range [–]1 to [–]90 dBm0. 0 = unspecified.
	26									DC hazardous voltage threshold, absolute value, volts. 0 = unspecified.
	27									AC hazardous voltage threshold, volts RMS. 0 = unspecified.
	28									DC foreign voltage threshold, absolute value, volts. 0 = unspecified.
	29									AC foreign voltage threshold, volts RMS. 0 = unspecified.
	30									Tip-ground and ring-ground resistance threshold, kΩ. 0 = unspecified.
	31									Tip-ring resistance threshold, kΩ. 0 = unspecified.
	32-33									Ringer equivalence minimum threshold, in 0.01 REN units. 0 = unspecified.

Exhibit 1022
IPR2024-00899, USPN 9,806,892
54 of 86

Field	Byte	8	7	6	5	4	3	2	1	Comments
	34-35									Ringer equivalence maximum threshold, in 0.01 REN units. 0 = unspecified.
	36-37									Pointer to a general purpose buffer ME, used to return vendor-specific test results.
	38-39									Pointer to an octet string ME, used to define vendor-specific test parameters. This field is optional. The OLT may include this field, or in case it is not used, omit it or set it to zero. The ONU should accept either option, ignoring the field if it does not support the feature.
MIC										Message integrity check

Test class 1:

Field	Byte	8	7	6	5	4	3	2	1	Comments
Message contents	11	a	0	0	1	x	x	x	x	a – test mode 0 normal; deny test if line busy 1 forced mode x Reserved
	12-27									ASCII string containing number to be dialled. Trailing unused octets are padded with null bytes.
MIC	28-31									Message integrity check

A.2.33 Synchronize time

Revise the introductory text as shown:

The synchronize time command controls the tick boundary for performance monitoring collection, and optionally, a date and time clock.

If this message specifies time (and optionally date), the ONU sets its PM interval counter to a current offset from the most recent quarter-hour boundary, that is, to a value in the range 0..899 seconds. This may cause the current PM collection interval to be longer or shorter than 900 seconds. Date and time are not explicitly required in an ONU, but if the ONU has a real-time clock, it is also set by this message. If the OLT does not wish to specify a date, it may set year, month and day fields to 0. If the ONU does not support setting of the date, it will use the success result info field in the synchronize time response message to indicate that only the 15-minute tick boundary was set.

If date and time are not present in the message, the ONU sets its PM interval counter to 0. This may cause the current PM collection interval to be shorter than 900 seconds. The effect on a possible ONU real-time clock is not specified.

There is no intention that this message be used to establish a precise time of day reference.

Exhibit 1022
IPR2024-00899, USPN 9,806,892
55 of 86

A.2.34 Synchronize time response

Add a field to the message, as shown:

Field	Byte	8	7	6	5	4	3	2	1	Comments
Transaction correlation identifier	1-2									
Message type	3	0	0	1						DB = 0, AR = 0, AK = 1 Bits 5-1: action = synchronize time
Device identifier	4	0	0	0	0	1	0	1	1	Extended OMCI = 0x0B
Managed entity identifier	5-6									Entity class = ONU-G
	7-8									Entity instance = 0
Message contents length	9-10									Size of message contents field
Message contents	11	x	x	x	x	r	r	r	r	x: reserved rrrr: Result, reason 0000 command processed successfully 0001 command processing error 0010 command not supported 0011 parameter error 0100 unknown managed entity 0101 unknown managed entity instance 0110 device busy
	12	x	x	x	x	r	r	r	r	x: reserved rrrr: Success result info 0000 15-minute tick boundary set successfully 0001 Date and 15-minute tick boundary set successfully This byte is present and meaningful only when the result, reason code in byte 11 is 0000. Byte 12 is optional and is treated as described in clause 11.2.5.
MIC										Message integrity check

Exhibit 1022
IPR2024-00899, USPN 9,806,892
56 of 86

A.2.39 Test result

A.2.39.1 Format for self test action invoked against ONU-G and circuit pack entity classes

Modify the definition as shown:

Field	Byte	8	7	6	5	4	3	2	1	Comments
Transaction correlation identifier	1-2									
Message type	3	0	0	0						DB = 0, AR = 0, AK =0 bits 5-1: action = test result
Device identifier	4	0	0	0	0	1	0	1	1	Extended OMCI = 0x0B
Managed entity identifier	5-6									Entity class NOTE – This message format pertains to ONU-G and circuit pack entity classes.
	7-8									Entity instance
Message contents length	9-10									Size of message contents field
Message contents	11	0	0	0	0	0	0	0	0	Reserved
	12	0	0	0	0	0	0	x	x	xx: self test result 00 failed 01 passed 10 not completed
	13-14									Pointer to a general purpose buffer ME. Valid only for vendor-specific tests that require a GP buffer. This field is optional. The ONU may include this field, or in case it is not used, omit it or set it to zero. The OLT should accept either option.
MIC										Message integrity check

A.2.39.3 Format for POTS UNI entity class

Replace the text of clause A.2.39.3 with the following:

In this format, byte 11 reports a summary MLT test result. The result for each test category is limited to the two values *pass test* or *test not run* or *failed test*. Byte 13 reports the results of a dial tone test.

Byte 12 reports the result of a self-test or a vendor-specific test that returns results in a general purpose buffer. At present, self-test is not supported for the POTS UNI entity class, and this byte should be set to 0.

There are four possible outcomes for a given test: it can pass, fail, not be run, or not be recognized by the ONU. If an ONU does not support or recognize a given test, it is expected to deny the test request message. To avoid physical damage, an ONU may cease testing if a test fails – usually the hazardous potential test – and thus some subsequent tests will not be run. In addition, the ONU may support some but not all tests of a given suite, such as power measurements in the dial tone test sequence. The category summary in byte 11 includes two values. The value 1 indicates either that all tests in a category passed, or that nothing in the category was tested, while 0 indicates that at

Exhibit 1022
IPR2024-00899, USPN 9,806,892
57 of 86

least one test in the category failed. Further information appears in flags specific to each test results attribute to indicate whether each detailed test was run or not, whether it passed or failed and whether a measured result is reported or not.

Several distinct test classes are defined.

Field	Byte	8	7	6	5	4	3	2	1	Comments
Transaction correlation identifier	1-2									
Message type	3	0	0	0						DB = 0, AR = 0, AK = 0 bits 5-1: action = test result
Device identifier	4	0	0	0	0	1	0	1	1	Extended OMCI = 0x0B
Managed entity identifier	5-6									Entity class NOTE – This message format pertains to the PPTP POTS UNI entity class.
	7-8									Entity instance
Message contents length	9-10									Size of message contents field
Message contents	11	t	t	x	x	x	x	x	x	tt selects one of the POTS test class formats 0 MLT, dial tone make-break 1 SIP/H.248 test call 2..3 Reserved x Bits reserved for use in specific test classes as defined below

Test class 0:

Modify the existing definition as shown.

Field	Byte	8	7	6	5	4	3	2	1	Comments
Message contents	11	0	0	a	b	c	d	e	f	MLT drop test result: 0 fail test a/b/c/d/e/f 1 pass test, or test not run a hazardous potential b foreign EMF c resistive faults d receiver off-hook e ringer f NT1 dc signature test
	12	0	0	0	0	0	0	x	x	xx: Result of self test or vendor-specific test 00 failed 01 passed 10 not completed

Exhibit 1022
IPR2024-00899, USPN 9,806,892
58 of 86

Field	Byte	8	7	6	5	4	3	2	1	Comments
	13			b	b	b	d	d	d	Dial tone make-break flags: ddd – Dial tone draw 000 test not run 01m failed, could not draw 10m slow draw 11m passed bbb – Dial tone break 000 test not run 01m failed, could not break 10m slow break 11m passed m – measured value flag 0 measurement not reported 1 measurement reported
	14			a	a	a	b	b	b	Dial tone power flags (Note) aaa – Quiet channel power bbb – Dial tone power
	15			a	a	a	b	b	b	Loop test DC voltage flags (Note) aaa – VDC, tip-ground bbb – VDC, ring-ground
	16			a	a	a	b	b	b	Loop test AC voltage flags (Note) aaa – VAC, tip-ground bbb – VAC, ring-ground
	17			a	a	a	b	b	b	Loop test resistance flags 1 (Note) aaa – Resistance, tip-ground bbb – Resistance, ring-ground
	18			a	a	a	b	b	b	Loop test resistance flags 2 (Note) aaa – Resistance, tip-ring bbb – Ringer load test
	19									Time to draw dial tone, in 0.1 second units. Valid only if byte 13 ddd = xx1.
	20									Time to break dial tone, in 0.1 second units. Valid only if byte 13 bbb = xx1.
	21									Total dial tone power measurement, unsigned absolute value, 0.1 dB resolution, range 0 to [–] 25.5 dBm0. Values above 0 dBm0 are reported as 0. Valid only if byte 14 bbb = xx1.
	22									Quiet channel power measurement, unsigned absolute value, 1 dB resolution, range 0 to [–]90 dBm0. Valid only if byte 14 aaa = xx1.
	23-24									Tip-ground DC voltage, 2 s complement, resolution 1V. Valid only if byte 15 aaa = xx1.
	25-26									Ring-ground DC voltage, 2 s complement, resolution 1V. Valid only if byte 15 bbb = xx1.

Exhibit 1022
IPR2024-00899, USPN 9,806,892
59 of 86

Field	Byte	8	7	6	5	4	3	2	1	Comments
	27									Tip-ground AC voltage, Vrms. Valid only if byte 16 aaa = xx1.
	28									Ring-ground AC voltage, Vrms. Valid only if byte 16 bbb = xx1.
	29-30									Tip-ground DC resistance, kΩ. Infinite resistance: 0xFFFF. Valid only if byte 17 aaa = xx1.
	31-32									Ring-ground DC resistance, kΩ. Infinite resistance: 0xFFFF. Valid only if byte 17 bbb = xx1.
	33-34									Tip-ring DC resistance, kΩ. Infinite resistance: 0xFFFF. Valid only if byte 18 aaa = xx1.
	35									Ringer equivalence, in 0.1 REN units. Valid only if byte 18 bbb = xx1.
	36-37									Pointer to a general purpose buffer ME. Valid only for vendor-specific tests that require a GP buffer.
	38			a	a	a	b	b	b	Loop tip-ring test AC/DC voltage flags. Bytes 38-41 are optional as a group. The ONU may include or omit them as a group. The OLT should accept either option in accordance with clause 11.2.5. aaa – VAC, tip-ring bbb – VDC, tip-ring (Note)
	39									Tip-ring AC voltage, Vrms. Valid only if byte 38 aaa = xx1.
	40-41									Tip-ring DC voltage, 2s complement, resolution 1 V. Valid only if byte 38 bbb = xx1.
MIC										Message integrity check

NOTE – Coding for 3 bit flag sets is as follows:
000 test not run;
010 fail, measurement not reported;
011 fail, measurement reported;
110 pass, measurement not reported;
111 pass, measurement reported.

Exhibit 1022
IPR2024-00899, USPN 9,806,892
60 of 86

Test class 1:

Field	Byte	8	7	6	5	4	3	2	1	Comments
Message contents	11	0	0	0	1	x	y	y	y	yyy report the results of the test 000 Test failed 001 Test passed 010 Not completed, line off hook 011 Not completed, other reason 100 Reserved 101 Reserved 110 Reserved 111 Reserved x Reserved
MIC	12-15									Message integrity check

A.2.39.4 Format for test action invoked against IP host config data and IPv6 host config data entity classes

Modify the description of bytes 5-6:

Field	Byte	8	7	6	5	4	3	2	1	Comments
Transaction correlation identifier	1-2									
Message type	3	0	0	0						DB = 0, AR = 0, AK =0 bits 5-1: action = test result
Device identifier	4	0	0	0	0	1	0	1	1	Extended OMCI = 0x0B
Managed entity identifier	5-6									Entity class NOTE – This format applies to entity classes IP host config data and IPv6 host config data.
	7-8									Entity instance
Message contents length	9-10									Size of message contents field, bytes
Message contents	11	0	0	0	0	0	x	x	x	xxx: Test result 000 timed out, no response 001 ICMP echo responses attached 010 ICMP time exceeded responses attached 011 Unexpected ICMP response 100..111 Reserved
	12-n									See following descriptions for the content of these bytes
MIC										Message integrity check, 4 bytes

Exhibit 1022
IPR2024-00899, USPN 9,806,892
61 of 86

Modify the xxx=010 definition as shown:

If xxx = 010 (time exceeded – traceroute), the remainder of the message contains the following content. In PON applications, it is not expected that a route trace will exceed the available space in the message, but if it does, the more distant responses should be dropped.

										IP address of nearest neighbour (4 bytes, IPv4, or 16 bytes, IPv6)
										IP address of second nearest neighbour (4 bytes, IPv4, or 16 bytes, IPv6)
	…									etc.

A.2.39.5 Format for optical line supervision test action invoked against ANI-G, RE ANI-G, PPTP RE UNI, RE upstream amplifier or RE downstream amplifier entity class

Replace the text of A.2.39.5 with the following:

Field	Byte	8	7	6	5	4	3	2	1	Comments
Transaction correlation identifier	1-2									
Message type	3	0	0	0						DB = 0, AR = 0, AK =0 bits 5-1: action = test result
Device identifier	4	0	0	0	0	1	0	1	1	Extended OMCI = 0x0B
Managed entity identifier	5-6									Entity class NOTE – This message format pertains to ANI-G, RE ANI-G, PPTP RE UNI, RE upstream amplifier or RE downstream amplifier entity classes
	7-8									Entity instance
Message contents length	9-10									Size of message contents field
Message contents	11	0	0	0	0	0	0	0	1	Type = 1, Power feed voltage
	12-13									V, 2s complement, 20 mV resolution
	14	0	0	0	0	0	0	1	1	Type = 3, Received optical power
	15-16									dBµW, 2s complement, 0.002 dB resolution
	17	0	0	0	0	0	1	0	1	Type = 5, Mean optical launch power
	18-19									dBµW, 2s complement, 0.002 dB resolution
	20	0	0	0	0	1	0	0	1	Type = 9, Laser bias current
	21-22									Unsigned integer, 2 µA resolution
	23	0	0	0	0	1	1	0	0	Type 12, Temperature, degrees
	24-25									2s complement, 1/256 degree C resolution

Exhibit 1022
IPR2024-00899, USPN 9,806,892
62 of 86

Field	Byte	8	7	6	5	4	3	2	1	Comments
	26-27									Pointer to a general purpose buffer ME. Valid only for vendor-specific tests that require a GP buffer. This field is optional. The OLT may include this field, or in case it is not used, omit it or set it to zero. The OLT should accept either option.
MIC										Message integrity check
NOTE – Unsupported tests are indicated with test type indicator 0 and 2 bytes of 0 data.										

A.3 Baseline message set

A.3.21 Test

A.3.21.1 Format for ONU-G, ANI-G, RE ANI-G, PPTP RE UNI, RE upstream amplifier, RE downstream amplifier and circuit pack entity classes

Modify the description as shown:

Field	Byte	8	7	6	5	4	3	2	1	Comments
Transaction correlation identifier	1-2									
Message type	3	0	1	0						DB = 0, AR = 1, AK = 0 bits 5-1: action = test
Device identifier	4	0	0	0	0	1	0	1	0	OMCI = 0x0A
Managed entity identifier	5-6									Entity class. NOTE – This format applies to entity classes ONU-G, ANI-G, RE ANI-G, PPTP RE UNI, RE upstream amplifier, RE downstream amplifier and circuit pack.
	7-8									Entity instance
Message contents	9	0	0	0	0	x	x	x	x	xxxx = select test 0000..0110 reserved for future use 0111 self test 1000..1111 vendor-specific use See description related to the test result message.
	10-11									Pointer to a general purpose buffer ME, used to return vendor-specific test results. 0 = unused (vendor-specific results are not expected).
	12-13									Pointer to an octet string ME, used to define the vendor-specific test parameters. 0 = unused (vendor-specific parameters are not specified).

Exhibit 1022
IPR2024-00899, USPN 9,806,892
63 of 86

Field	Byte	8	7	6	5	4	3	2	1	Comments
	14-40									Zero padding
OMCI trailer	41-48									

A.3.21.2 Format for IP host config data and IPv6 host config data entity classes

Replace the text of A.3.21.2 with the following:

Field	Byte	8	7	6	5	4	3	2	1	Comments
Transaction correlation identifier	1-2									
Message type	3	0	1	0						DB = 0, AR = 1, AK = 0 Bits 5-1: action = test
Device identifier	4	0	0	0	0	1	0	1	0	OMCI = 0x0A
Managed entity identifier	5-6									Entity class. NOTE – This format applies to entity classes IP host config data and IPv6 host config data.
	7-8									Entity instance
Message contents	9	0	0	0	0	x	x	x	x	xxxx = select test 0001 = Ping 0010 = Traceroute 0010..0111 Reserved 1000..1111 Vendor-specific use The ICMP message is intended to be sent from the ONU upstream toward the network. See discussion related to the test result message.
	10-13									Option 1: IPv4 address of target
	10-25									Option 2: IPv6 address of target
	…-40									Zero padding
OMCI trailer	41-48									

A.3.21.3 Format for PPTP POTS UNI entity class

Replace the text of A.3.21.3 with the following:

The test message for POTS UNIs supports two basic categories of test operation, a defined set of tests that look in and out from the POTS port, and a set of code points that may be used for vendor-specific tests. The latter category is further subdivided into code points that return test results in a general purpose buffer ME, using the test results message primarily as an event trigger to signal test completion, and code points that return all test results in an ordinary test result message. If it is needed, the OLT must create the general purpose buffer managed entity before initiating the test action.

Note that a single message can be used to initiate multiple tests on a given ME if desired.

Exhibit 1022
IPR2024-00899, USPN 9,806,892
64 of 86

Bytes 10-23 are used by the dial tone make-break test. A zero value for a timer causes the ONU to use its built-in defaults. As many as three dial tone frequencies can be specified, or omitted by setting their values to 0. Other fields are also omitted with the value 0, or controlled by flags. An ONU can support the dial tone test with internal defaults only, and is not required to support any of the attributes of bytes 10-23. Likewise, an ONU can use internal defaults for drop test, rather than the values given in bytes 24-33. The capabilities of an ONU are documented by the vendor and known through administrative practices.

Several distinct test classes are defined.

Field	Byte	8	7	6	5	4	3	2	1	Comments
Transaction correlation identifier	1-2									
Message type	3	0	1	0						DB = 0, AR = 1, AK = 0 Bits 5-1: action = test
Device identifier	4	0	0	0	0	1	0	1	1	OMCI = 0x0A
Managed entity identifier	5-6									Entity class NOTE – This format applies to entity class PPTP POTS UNI.
	7-8									Entity instance
Message contents	9	x	0	t	t	x	x	x	x	tt selects one of the POTS test class formats 0 MLT, dial tone make-break 1 SIP/H.248 test call 2..3 Reserved x Bits reserved for use in specific test classes as defined below

Exhibit 1022
IPR2024-00899, USPN 9,806,892
65 of 86

Test class 0:

Field	Byte	8	7	6	5	4	3	2	1	Comments
Message contents	9	a	0	0	0	x	x	x	x	a – test mode 0 = normal; deny test if line busy 1 = forced mode xxxx = select test 0000 = all MLT tests 0001 = hazardous potential 0010 = foreign EMF 0011 = resistive faults 0100 = receiver off-hook 0101 = ringer 0110 = NT1 dc signature test 0111 = self test 1000 = dial tone make-break test 1001..1011 = vendor-specific test, all results returned in test results message 1100..1111 is a vendor-specific test, test results returned in general purpose buffer ME. The ONU should deny a test operation command in this range if bytes 34-35 do not point to a GP buffer.
	10									DBDT timer T1 (slow dial tone threshold), in units of 0.1 seconds. Range 0.1 to 6.0 seconds.
	11									DBDT timer T2 (no dial tone threshold), in units of 0.1 seconds. Range 1.0 to 10.0 seconds.
	12									DBDT timer T3 (slow break dial tone threshold), in units of 0.1 seconds. Range 0.1 to 3.0 seconds.
	13									DBDT timer T4 (no break dial tone threshold), in units of 0.1 seconds. Range 1.0 to 3.0 seconds.
	14							d	p	DBDT control byte d: dialled digit 1 = dialled digit specified in byte 15 0 = use default digit p = pulse (1) or tone (0) dialling
	15									Digit to be dialled, ASCII character in range "0"-"9", "*", "#".
	16-17									Dial tone frequency 1, in units of Hz
	18-19									Dial tone frequency 2, in units of Hz. 0 = unused (i.e., if only one tone is specified).

Exhibit 1022
IPR2024-00899, USPN 9,806,892
66 of 86

Field	Byte	8	7	6	5	4	3	2	1	Comments
	20-21									Dial tone frequency 3, in units of Hz. 0 = unused (i.e., if only one or two tones are specified).
	22									Dial tone power threshold, absolute value, 0.1 dB resolution, range [–]0.1 to [–]25.3 dBm0, e.g., –13 dBm0 = 0x82. 0x00 = unspecified.
	23									Idle channel power threshold, absolute value, 1 dB resolution, range [–]1 to [–]90 dBm0. 0x00 = unspecified.
	24									DC hazardous voltage threshold, absolute value, volts 0x00 = unspecified.
	25									AC hazardous voltage threshold, volts RMS 0x00 = unspecified
	26									DC foreign voltage threshold, absolute value, volts 0x00 = unspecified
	27									AC foreign voltage threshold, volts RMS 0x00 = unspecified
	28									Tip-ground and ring-ground resistance threshold, kΩ 0x00 = unspecified
	29									Tip-ring resistance threshold, kΩ 0x00 = unspecified
	30-31									Ringer equivalence minimum threshold, in 0.01 REN units 0x00 = unspecified
	32-33									Ringer equivalence maximum threshold, in 0.01 REN units 0x00 = unspecified.
	34.. 35									Pointer to a general purpose buffer ME, used to return vendor-specific test results
	36-37									Pointer to an octet string ME, used to define vendor-specific test parameters. 0 = unused (vendor-specific parameters are not specified).
	38-40									Zero padding
OMCI trailer	41-48									

Exhibit 1022
IPR2024-00899, USPN 9,806,892
67 of 86

Test class 1:

Field	Byte	8	7	6	5	4	3	2	1	Comments
Message contents	9	a	0	0	1	x	x	x	x	a – test mode 0 normal; deny test if line busy 1 forced mode x Reserved
	10-25									ASCII string containing number to be dialled. Trailing unused octets are padded with null bytes.
	26-40									Zero padding
OMCI trailer	41-48									

A.3.33 Synchronize time

Replace the text of A.3.33 with the following:

The synchronize time command controls the tick boundary for performance monitoring collection, and optionally, a date and time clock.

If this message specifies time (and optionally date), the ONU sets its PM interval counter to a current offset from the most recent quarter-hour boundary, that is, to a value in the range 0..899 seconds. This may cause the current PM collection interval to be longer or shorter than 900 seconds. Date and time are not explicitly required in an ONU, but if the ONU has a real-time clock, it is also set by this message. If the OLT does not wish to specify a date, it may set year, month and day fields to 0.If the ONU does not support setting of the date, it will use the success result info field in the synchronize time response message to indicate that only the 15-minute tick boundary was set.

If date and time are not present in the message, the ONU sets its PM interval counter to 0. This may cause the current PM collection interval to be shorter than 900 seconds. The effect on a possible ONU real-time clock is not specified.

There is no intention that this message be used to establish a precise time of day reference.

Field	Byte	8	7	6	5	4	3	2	1	Comments
Transaction correlation identifier	1-2									
Message type	3	0	1	0						DB = 0, AR = 1, AK = 0 bits 5-1: action = synchronize time
Device identifier	4	0	0	0	0	1	0	1	1	OMCI = 0x0A
Managed entity identifier	5-6									Entity class = ONU-G
	7-8									Entity instance = 0
Message contents	9-10									Year, e.g., 2009
	11									Month, range 1..12
	12									Day of month, range 1..31
	13									Hour of day, range 0..23
	14									Minute of hour, range 0..59
	15									Second of minute, range 0..59
	16-40									Zero padding
OMCI trailer	41-48									

Exhibit 1022
IPR2024-00899, USPN 9,806,892
68 of 86

A.3.34 Synchronize time response

Replace the text of A.3.34 with the following:

Field	Byte	8	7	6	5	4	3	2	1	Comments
Transaction correlation identifier	1-2									
Message type	3	0	0	1						DB = 0, AR = 0, AK = 1 Bits 5-1: action = synchronize time
Device identifier	4	0	0	0	0	1	0	1	1	OMCI = 0x0A
Managed entity identifier	5-6									Entity class = ONU-G
	7-8									Entity instance = 0
Message contents	9									Result, reason 0000 command processed successfully 0001 command processing error 0010 command not supported 0011 parameter error 0100 unknown managed entity 0101 unknown managed entity instance 0110 device busy
	10									Success result info – this field has a meaning only when the result, reason code in byte 9 was '0000 - command processed successfully'. 0000 15-minute tick boundary set successfully 0001 Date and 15-minute tick boundary set successfully
	11-40									Zero padding
OMCI trailer	41-48									

A.3.39 Test result

A.3.39.1 Format for self test action invoked against ONU-G and circuit pack entity classes

Replace the text of A.3.39.1 with the following:

Field	Byte	8	7	6	5	4	3	2	1	Comments
Transaction correlation identifier	1-2									
Message type	3	0	0	0						DB = 0, AR = 0, AK = 0 bits 5-1: action = test result
Device identifier	4	0	0	0	0	1	0	1	0	OMCI = 0x0A

Exhibit 1022
IPR2024-00899, USPN 9,806,892
69 of 86

Field	Byte	8	7	6	5	4	3	2	1	Comments
Managed entity identifier	5-6									Entity class. NOTE – This message format pertains to ONU-G and circuit pack entity classes.
	7-8									Entity instance
Message contents	9	0	0	0	0	0	0	0	0	Unused
	10	0	0	0	0	0	0	x	x	Self test result: xx = 00: failed xx = 01: passed xx = 10: not completed
	11-12									Pointer to a general purpose buffer ME. Valid only for vendor-specific tests that require a GP buffer, otherwise zero.
	13-40									Zero padding
OMCI trailer	41-48									

A.3.39.3 Format for PPTP POTS UNI entity class

Replace the text of A.3.39.3 with the following:

Byte 9 reports a summary MLT test result. The result for each test category is limited to the two values *test passed* or *was not executed* or *test failed*. Bytes 11 and 12 report the results of a dial tone test.

Byte 10 reports the result of a self-test or a vendor-specific test that returns results in a general purpose buffer. At present, self-test is not supported for the PPTP POTS UNI entity class, and this byte should be set to 0.

There are four possible outcomes for a given test: it can pass, fail, not be run, or not be recognized by the ONU. If an ONU does not support or recognize a given test, it is expected to deny the test request message. To avoid physical damage, an ONU may cease testing if a test – usually hazardous potential – fails, and thus some subsequent tests will not be run. In addition, the ONU may support some but not all tests of a given suite, such as power measurements in the dial tone test sequence. The category summary in byte 9 includes two values. The value 1 indicates either that all tests in a category passed, or that nothing in the category was tested, while 0 indicates that at least one test in the category failed. Further information appears in flags specific to each test results attribute to indicate whether each detailed test was run or not, whether it passed or failed and whether a measured result is reported or not.

Several distinct test classes are defined.

Field	Byte	8	7	6	5	4	3	2	1	Comments
Transaction correlation identifier	1-2									
Message type	3	0	0	0						DB = 0, AR = 0, AK = 0 bits 5-1: action = test result
Device identifier	4	0	0	0	0	1	0	1	1	Extended OMCI = 0x0B

Exhibit 1022
IPR2024-00899, USPN 9,806,892
70 of 86

Field	Byte	8	7	6	5	4	3	2	1	Comments
Managed entity identifier	5-6									Entity class NOTE – This message format pertains to the PPTP POTS UNI entity class.
	7-8									Entity instance
Message contents	9	t	t	x	x	x	x	x	x	tt selects one of the POTS test class formats 0 MLT, dial tone make-break 1 SIP/H.248 test call 2..3 Reserved x Bits reserved for use in specific test classes as defined below

Test class 0:

Field	Byte	8	7	6	5	4	3	2	1	Comments
Message contents	9	0	0	a	b	c	d	e	f	MLT drop test result: 0 = fail test a/b/c/d/e/f 1 = pass test, or test not run a/b/c/d/e/f: a = hazardous potential b = foreign EMF c = resistive faults d = receiver off-hook e = ringer f = NT 1 dc signature test
	10	0	0	0	0	0	0	x	x	Result of self test or vendor-specific test: xx = 00: failed xx = 01: passed xx = 10: not completed
	11			b	b	b	d	d	d	Dial tone make-break flags: ddd – Dial tone draw = 000 test not run = 01 m failed, could not draw = 10 m slow draw = 11 m passed bbb – Dial tone break = 000 test not run = 01 m failed, could not break = 10 m slow break = 11 m passed m – measured value flag = 0 measurement not reported = 1 measurement reported

Exhibit 1022
IPR2024-00899, USPN 9,806,892
71 of 86

Field	Byte	8	7	6	5	4	3	2	1	Comments
	12			a	a	a	b	b	b	Dial tone power flags: aaa – quiet channel power bbb – dial tone power (Note)
	13			a	a	a	b	b	b	Loop test DC voltage flags aaa – VDC, tip-ground bbb – VDC, ring-ground (Note)
	14			a	a	a	b	b	b	Loop test AC voltage flags aaa – VAC, tip-ground bbb – VAC, ring-ground (Note)
	15			a	a	a	b	b	b	Loop test resistance flags 1 aaa – resistance, tip-ground bbb – resistance, ring-ground (Note)
	16			a	a	a	b	b	b	Loop test resistance flags 2 aaa – resistance, tip-ring bbb – ringer load test (Note)
	17									Time to draw dial tone, in 0.1 second units. Valid only if byte 11 ddd = xx1.
	18									Time to break dial tone, in 0.1 second units. Valid only if byte 11 bbb = xx1.
	19									Total dial tone power measurement, unsigned absolute value, 0.1 dB resolution, range 0 to [–] 25.5 dBm0. Values above 0 dBm0 are reported as 0. Valid only if byte 12 bbb = xx1.
	20									Quiet channel power measurement, unsigned absolute value, 1 dB resolution, range 0 to [–]90 dBm0. Valid only if byte 12 aaa = xx1.
	21-22									Tip-ground DC voltage, 2 s complement, resolution 1 V. Valid only if byte 13 aaa = xx1.
	23-24									Ring-ground DC voltage, 2 s complement, resolution 1 V. Valid only if byte 13 bbb = xx1.
	25									Tip-ground AC voltage, Vrms. Valid only if byte 14 aaa = xx1.
	26									Ring-ground AC voltage, Vrms. Valid only if byte 14 bbb = xx1.

Exhibit 1022
IPR2024-00899, USPN 9,806,892
72 of 86

Field	Byte	8	7	6	5	4	3	2	1	Comments
	27-28									Tip-ground DC resistance, kΩ. Infinite resistance: 0xFFFF. Valid only if byte 15 aaa = xx1.
	29-30									Ring-ground DC resistance, kΩ. Infinite resistance: 0xFFFF. Valid only if byte 15 bbb = xx1.
	31-32									Tip-ring DC resistance, kΩ. Infinite resistance: 0xFFFF. Valid only if byte 16 aaa = xx1.
	33									Ringer equivalence, in 0.1 REN units. Valid only if byte 16 bbb = xx1.
	34-35									Pointer to a general purpose buffer ME. Valid only for vendor-specific tests that require a GP buffer.
	36			a	a	a	b	b	b	Loop tip-ring test AC/DC voltage flags aaa – VAC, tip-ring bbb – VDC, tip-ring (Note)
	37									Tip-ring AC voltage, Vrms. Valid only if byte 36 aaa = xx1.
	38-39									Tip-ring DC voltage, 2s complement, resolution 1 V. Valid only if byte 36 bbb = xx1.
	40									Zero padding
OMCI trailer	41-48									
NOTE – Coding for 3 bit flag sets is as follows: = 000 test not run; = 010 fail, measurement not reported; = 011 fail, measurement reported; = 110 pass, measurement not reported; = 111 pass, measurement reported.										

Test class 1:

Field	Byte	8	7	6	5	4	3	2	1	Comments
Message contents	9	0	0	0	1	x	y	y	y	yyy report the results of the test 000 Test failed 001 Test passed 010 Not completed, line off hook 011 Not completed, other reason 100 Reserved 101 Reserved 110 Reserved 111 Reserved x Reserved

Exhibit 1022
IPR2024-00899, USPN 9,806,892
73 of 86

Field	Byte	8	7	6	5	4	3	2	1	Comments
	10-40									Zero padding
OMCI trailer	41-48									

A.3.39.4 Format for test action invoked against IP host config data and IPv6 host config data entity classes

Modify the description of bytes 5-6:

Field	Byte	8	7	6	5	4	3	2	1	Comments
Transaction correlation identifier	1-2									
Message type	3	0	0	0						DB = 0, AR = 0, AK = 0 bits 5-1: action = test result
Device identifier	4	0	0	0	0	1	0	1	0	OMCI = 0x0A
Managed entity identifier	5-6									Entity class. NOTE – This format applies to entity classes IP host config data and IPv6 host config data.
	7-8									Entity instance
Message contents	9	0	0	0	0	0	x	x	x	Test result: xxx 000: timed out, no response xxx 001: ICMP echo responses attached xxx 010: ICMP time exceeded responses attached xxx 011: Unexpected ICMP response xxx 100-111: Reserved
	10	0	0	0	y	y	y	y	y	yyyyy: number of meaningful bytes in the remainder of the test result message

Modify the xxx = 010 definition as shown:

If xxx = 010 (time exceeded – traceroute), the remainder of the message contains the following content. In PON applications, it is not expected that a route trace will exceed the available space in the message, but if it does, the more distant responses should be dropped. There is only enough space in the message body for a single IPv6 address.

	11-n									IP address of nearest neighbour (4 bytes, IPv4, or 16 bytes, IPv6)
	n+1- …									IP address of second nearest neighbour (4 bytes, IPv4 only)
	…									Etc.
	…-40									Zero padding
OMCI trailer	41-48									

Exhibit 1022
IPR2024-00899, USPN 9,806,892
74 of 86

A.3.39.5 Format for optical line supervision test action invoked against ANI-G, RE ANI-G, PPTP RE UNI, RE upstream amplifier or RE downstream amplifier entity class

Replace the text of A.3.39.5 with the following:

Field	Byte	8	7	6	5	4	3	2	1	Comments
Transaction correlation identifier	1-2									
Message type	3	0	0	0						DB = 0, AR = 0, AK =0 bits 5-1: action = test result
Device identifier	4	0	0	0	0	1	0	1	0	OMCI = 0x0A
Managed entity identifier	5-6									Entity class. NOTE – This message format pertains to ANI-G, RE ANI-G, PPTP RE UNI, RE upstream amplifier or RE downstream amplifier entity class.
	7-8									Entity instance
Message contents	9	0	0	0	0	0	0	0	1	Type = 1, power feed voltage
	10-11									V, 2s complement, 20 mV resolution
	12	0	0	0	0	0	0	1	1	Type = 3, received optical power
	13-14									dBμW, 2s complement, 0.002 dB resolution
	15	0	0	0	0	0	1	0	1	Type = 5, Mean optical launch power
	16-17									dBμW, 2s complement, 0.002 dB resolution
	18	0	0	0	0	1	0	0	1	Type = 9, laser bias current
	19-20									Unsigned integer, 2 μA resolution
	21	0	0	0	0	1	1	0	0	Type 12, temperature, degrees
	22-23									2s complement, 1/256 degree C resolution
	24-25									Pointer to a general purpose buffer ME. Valid only for vendor-specific tests that require a GP buffer.
	26-40									Zero padding
OMCI trailer	41-48									
NOTE – Unsupported tests are indicated with test type indicator 0 and 2 bytes of 0 data.										

Exhibit 1022
IPR2024-00899, USPN 9,806,892
75 of 86

Annex C

OMCI in Ethernet PON systems

(This annex forms an integral part of this Recommendation.)

Replace Annex C with the following:

C.1 Establishing the ONU management and control channel (OMCC)

Ethernet PON registration is described in [IEEE 802.3] clauses 64 and 77; the differences between the descriptions are immaterial to the establishment of the OMCC.

The OMCC for an Ethernet PON is established during the ONU discovery process. Figure C-1 replicates the illustration of the ONU discovery process from [IEEE 802.3] clause 77. During the discovery process, the OLT and ONU exchange their MAC addresses and physical parameters. The OLT then assigns a unique logical link ID (LLID) to the ONU, whereupon a logical connection between the OLT and ONU is established. When this discovery handshake is complete, the OMCC has been established. No additional process is needed to establish OMCC in an Ethernet PON system.

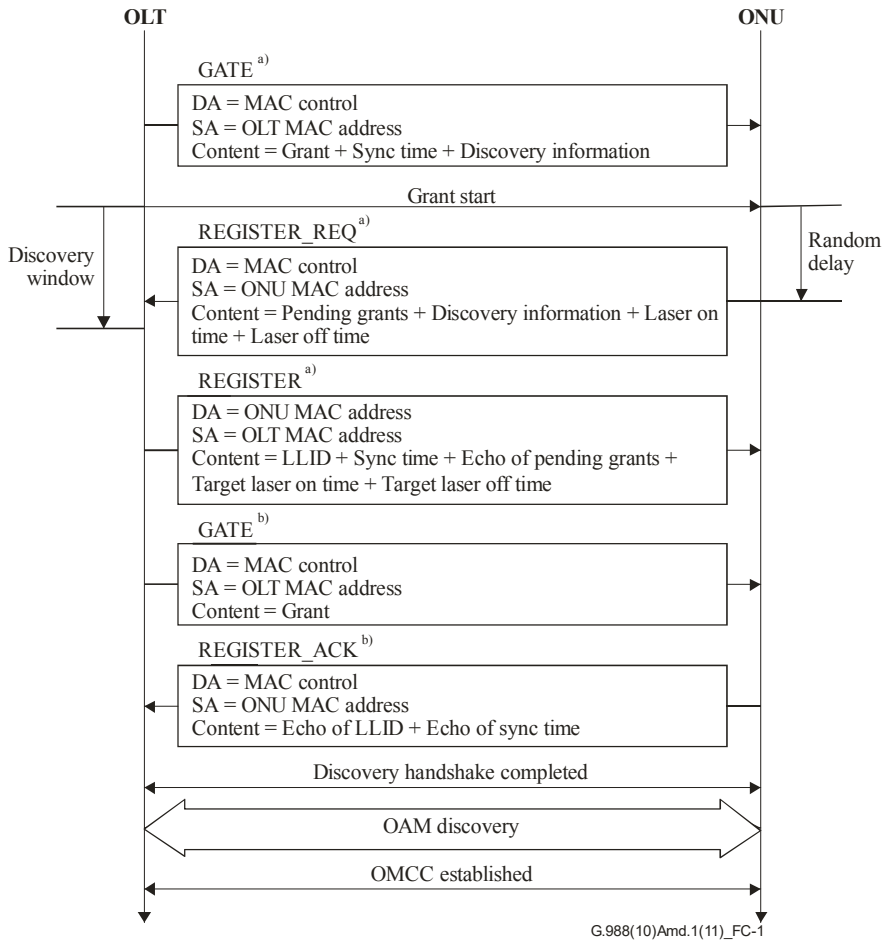

a) Messages sent on broadcast channel.
b) Messages sent on unicast channel.

Figure C-1 – OMCC establishment process, Ethernet PON

Exhibit 1022
IPR2024-00899, USPN 9,806,892
76 of 86

C.2 Encapsulating OMCI messages in Ethernet frames

The extended OAM frame defined in IEEE 802.3 is used for the EPON OMCI frame format. Figure C.2-1 shows the extended OAM frame for EPON OMCI.

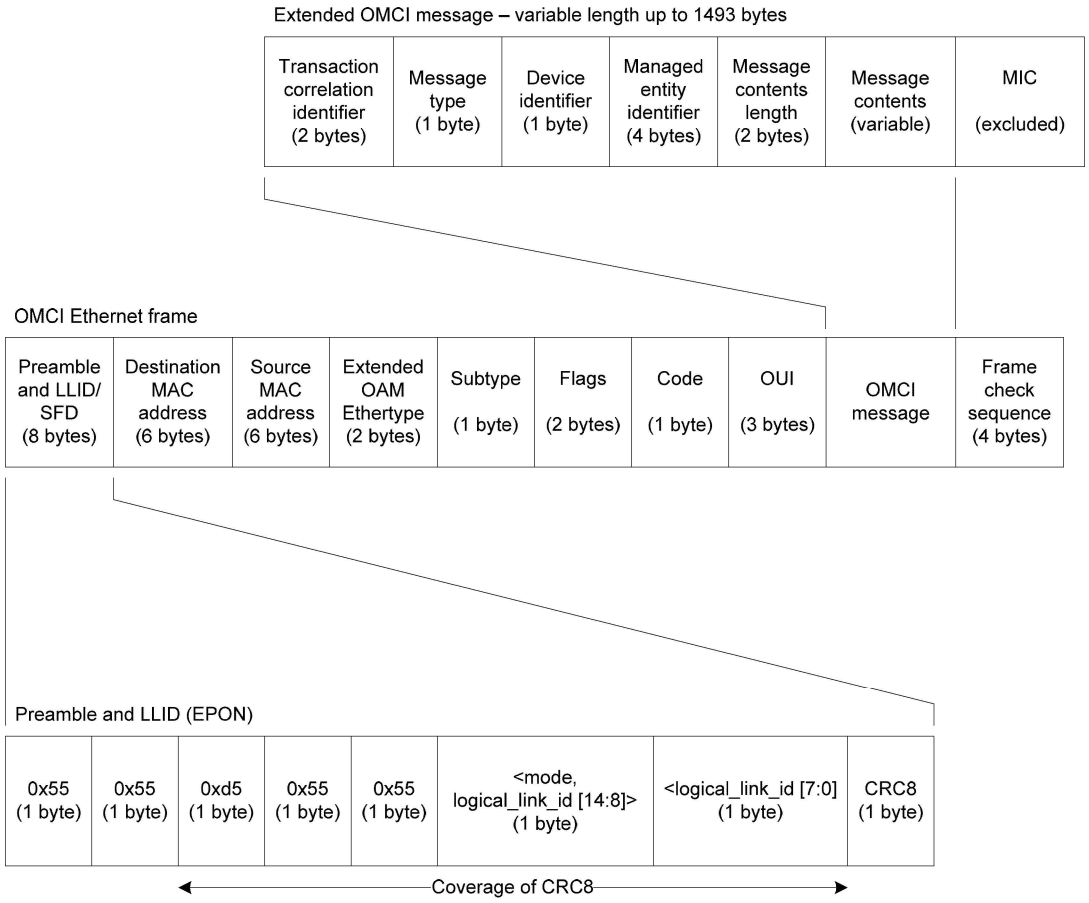

Figure C.2-1 – Extended OAM frame structure for EPON OMCI

The extended OAM frame format and fields for OMCI are defined in Table C.2-1.

Table C.2-1 – Extended OAM frame format and fields for EPON OMCI

Field	Length	Definition	Value
Preamble and LLID/SFD	8 bytes	Defined in clause 4.2 and clause 76 of [IEEE 802.3]	LLID is assigned during ONU discovery process
Destination MAC address	6 bytes	Destination MAC address	0x0180C2000002
Source MAC address	6 bytes	Source MAC address	MAC address of source equipment
Ethertype	2 bytes	[IEEE 802] clause 57	0x8809 (Slow protocol)
Subtype	1 byte	[IEEE 802] clause 57	0x03 (OAM)
Flags	2 bytes	[IEEE 802] clause 57	
Code	1 byte	[IEEE 802] clause 57	0xFE

Exhibit 1022
IPR2024-00899, USPN 9,806,892
77 of 86

Table C.2-1 – Extended OAM frame format and fields for EPON OMCI

Field	Length	Definition	Value
OUI	3 bytes	ITU-T OUI	0x0019A7
OMCI message	up to 1493 bytes	Defined in clauses 11 and A.2. Extended OMCI message Excludes MIC (4 bytes)	
Frame check sequence FCS	4 bytes	Defined in [IEEE 802.3]	

C.3 Relationship between OMCI and OAM defined in IEEE 802.3 clause 57

[IEEE 802.3] clause 57 describes OAM as an optional function. Items described in IEEE 802.3 clause 57 can be covered by OMCI. In most cases, an ITU-T G.988 support system does not need to support clause 57 OAM; however it is a system dependent matter.

Table C.3-1 – Relationship between clause 57 OAM and OMCI

#	Items in IEEE 802.3 clause 57	Corresponding OMCI functionalities
1	Information	This item is the OAM channel setup procedure. It is provided by the OMCC initial setup procedures.
2	Event notification	This item is alarm notification. It is provided by the alarm notification function defined in OMCI.
3	Variable request/response	This item can be interpreted as MIB get/set. OMCI supports the same functions.
4	Loopback control	This item is provided by OMCI loopback control.

C.4 Adaptation of G-PON information model to EPON

C.4.1 Overview

Table 8-1 lists the managed entities that are mandatory or not applicable for EPON systems. Some MEs are redefined in the present clause for use in EPON.

Managed entities on the ANI side were originally defined for the G-PON system architecture. In an EPON system, the PON framing protocol is different from G-PON or XG-PON. To adapt OMCI to an EPON system, the following interpretations are required.

In EPON, GEM ports and T-CONTs are not defined, because EPON conveys Ethernet frames transparently in the PON section. However, those differences can be absorbed by the interpretation shown in Table C.4-1. On the other hand, the MEs on the UNI side are usable without modification.

Table C.4-1 – Interpretation of ANI-side MEs

#	Items	Interpretation in EPON system
1	GEM port	The concept of GEM port is interpreted as a layer 2 flow such as VLAN, CoS, etc. In an EPON system, GEM port network CTP and GEM interworking termination point MEs exist for binding the layer 2 flows and priority queue MEs and the MAC bridge ME.
2	T-CONT	The T-CONT is the unit of bandwidth assignment. In an EPON system, the unit of bandwidth assignment is the logical link.

Exhibit 1022
IPR2024-00899, USPN 9,806,892
78 of 86

For providing Ethernet service to users in a PON system:

- G-PON/XG-PON1: Ethernet flows are encapsulated by GEM/XGEM in the PON section.
- EPON/10G-EPON: Ethernet flows are transparently conveyed in the PON section.

Except for GEM encapsulation, there is no difference between G-PON and EPON. MEs on the UNI side are compatible in both systems. Both systems require QoS configuration, cross connection, filtering, VLAN operation, etc., for each layer 2 service flow.

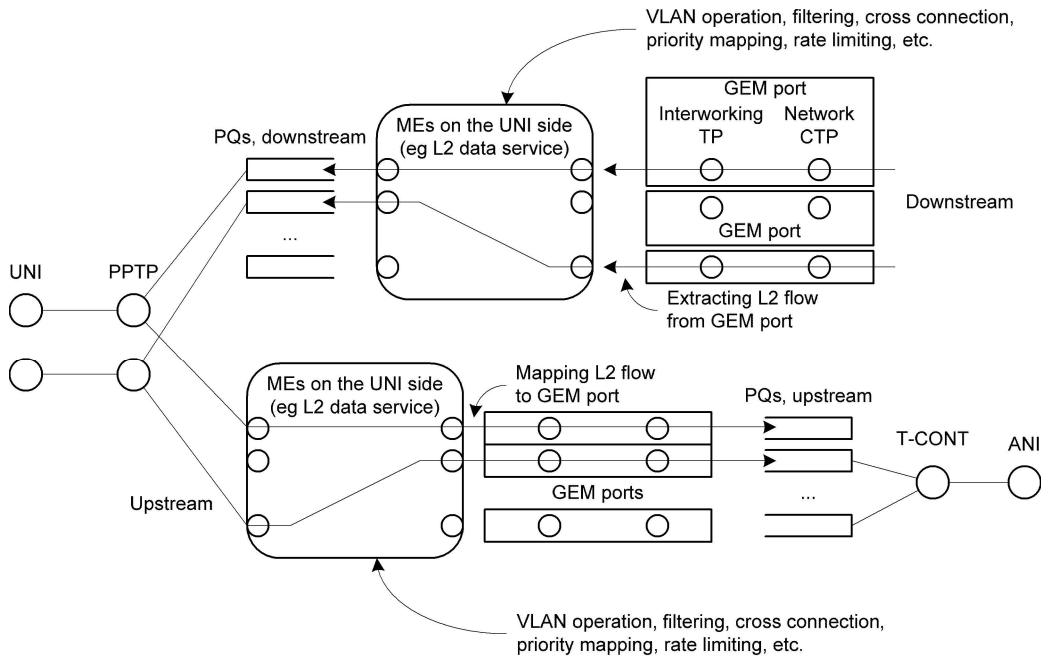

Figure C.4.1-1 – Layer 2 flows in G-PON ONU

By introducing the concept of virtual GEM port into OMCI, the MEs in Rec. ITU-T G.988 can be re-used for EPON. In G-PON, a GEM port is defined to convey each layer 2 flow. The GEM port network CTP connects the MAC bridge port and upstream/downstream priority queues in the ONU for Ethernet service. EPON requires the same configuration of connectivity between the MAC bridge port and upstream/downstream priority queues. By configuring the GEM ports virtually, G-PON and EPON are compatible in OMCI. A virtual GEM port exists for the purpose of connecting the MAC bridge port and priority queue. GEM port network CTP and GEM interworking termination point MEs are created for the ME pointer relationship.

What this means is that the GEM port network CTP is re-used in EPON, but the value of the GEM port attribute is not used. It is suggested that it be set to 0 by the OLT, and it must be ignored by the ONU.

Exhibit 1022
IPR2024-00899, USPN 9,806,892
79 of 86

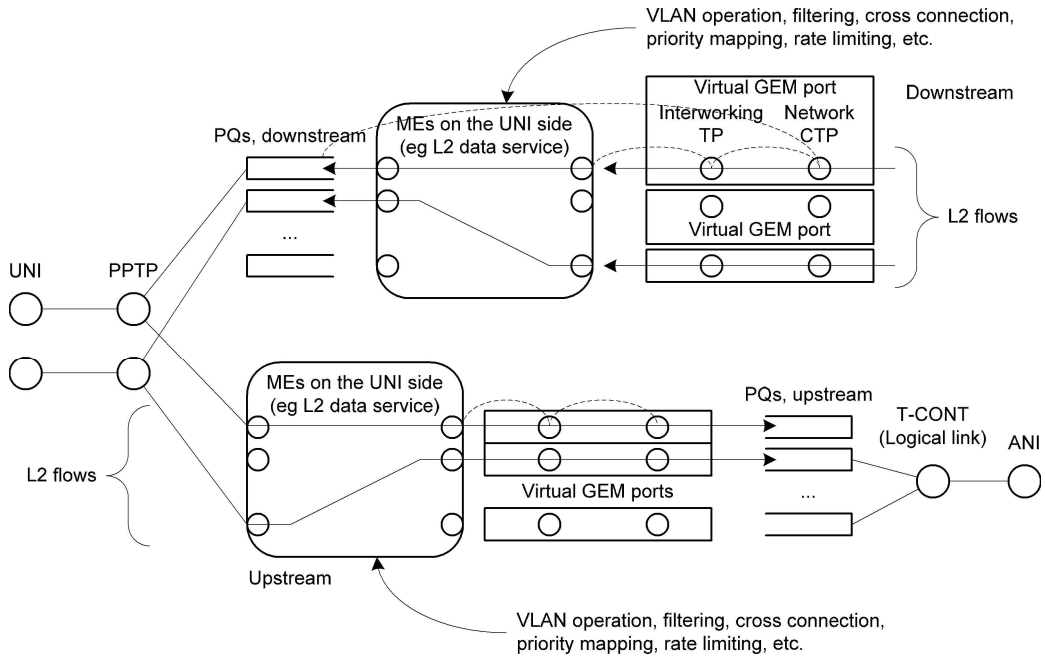

Figure C.4.1-2 – Virtual GEM ports in EPON ONU

C.4.2 ME definitions

This clause modifies certain MEs from their definitions in clause 9. Where no change is noted, the clause 9 definition remains applicable.

C.4.2.1 Clause 9.2.3: GEM port network CTP

This managed entity represents the termination of a GEM port on an ONU. In an EPON system, the GEM port exists virtually for keeping the pointer relationship. The value of the port-ID attribute is "don't care" because it does not represent an actual Port-ID. The optional attributes encryption state and encryption key ring are not used in an EPON system for the same reason**.**

Relationships

No change required.

Attributes

Table C.4.2.1-1 summarizes the attributes of the GEM port network CTP for EPON.

Table C.4.2.1-1 – Attributes of GEM port network CTP

Attributes	R/W, M/O	Definition changes in EPON
Managed entity id	(R, Set-by-create) (mandatory)	No change required.
Port-ID	(R, W, Set-by-create) (mandatory)	Don't care. Recommended to be set to 0 by OLT. Must be ignored by ONU.
T-CONT pointer	(R, W, Set-by-create) (mandatory)	T-CONT represents logical link in EPON.
Direction	(R, W, Set-by-create) (mandatory)	No change required.
Traffic management pointer for upstream	(R, W, Set-by-create) (mandatory)	No change required.

Exhibit 1022
IPR2024-00899, USPN 9,806,892
80 of 86

Table C.4.2.1-1 – Attributes of GEM port network CTP

Attributes	R/W, M/O	Definition changes in EPON
Traffic descriptor profile pointer for upstream	(R, W, Set-by-create) (optional)	No change required.
UNI counter	(R) (optional)	No change required.
Priority queue pointer for downstream	(R, W, Set-by-create) (mandatory)	No change required.
Encryption state	(R) (optional)	Not used.
Traffic descriptor profile pointer for downstream	(R, W, Set-by-create) (optional)	No change required.
Encryption key ring	(R, W, Set-by-create) (optional)	Not used.

Actions

No change required.

Notifications

End-to-end loss of continuity (optional) is not used in EPON.

C.4.2.2 Clause 9.2.4: GEM interworking termination point

An instance of this managed entity represents a point in the ONU where the interworking of a bearer service (usually Ethernet) to the GEM layer takes place. In an EPON system, the GEM port exists virtually, only for keeping pointer relationships. Interworking option attribute values are limited because there is no actual interworking function. The value of the GAL profile pointer is null because there is no GAL profile in EPON. Likewise, the value of GAL loopback configuration is always 0 (no loopback).

Relationships

No change required.

Attributes

Table C.4.2.2-1 summarizes the attributes of GEM interworking termination point for EPON.

Table C.4.2.2-1 – Attributes of GEM interworking termination point

Attributes	R/W, M/O	Definition changes in EPON
Managed entity id	(R, Set-by-create) (mandatory)	No change required.
GEM port network CTP connectivity pointer	(R, W, Set-by-create) (mandatory)	No change required.
Interworking option	(R, W, Set-by-create) (mandatory)	0 Reserved 1 MAC bridged LAN 2 Reserved 3 Reserved 4 Reserved 5 802.1p mapper 6 Downstream broadcast 7 Reserved

Exhibit 1022
IPR2024-00899, USPN 9,806,892
81 of 86

Table C.4.2.2-1 – Attributes of GEM interworking termination point

Attributes	R/W, M/O	Definition changes in EPON
Service profile pointer	(R, W, Set-by-create) (mandatory)	No change required.
Interworking termination point pointer	(R, W, Set-by-create) (mandatory)	No change required.
PPTP counter	(R) (optional)	No change required.
Operational state	(R) (optional)	No change required.
GAL profile pointer	(R, W, Set-by-create) (mandatory)	Not used. Set to 0 by OLT, ignored by ONU.
GAL loopback configuration	(R, W) (mandatory)	Fixed value 0x00 (No loopback)

Actions

No change required.

Notifications

No change required.

Exhibit 1022
IPR2024-00899, USPN 9,806,892
82 of 86

Appendix II

G-PON mechanisms and services

Add the following note at the head of this clause:

NOTE – When text in this clause refers to the IP host config data ME, or to an IP stack, it is understood to include the IPv6 host config data ME, or an IPv6 stack, as modified suitably by the differences between IPv4 and IPv6.

Appendix II

G-PON mechanisms and services

II.1 Layer 2 data service according to TR-156

II.1.3 Layer 2 multicast data services

II.1.3.2 Control plane

Add the following new paragraph at the end of the clause:

Support of multicast preview or paid preview functions also requires configuration in the control plane. The multicast subscriber config info ME is used to provision this support, including the forwarding of preview groups to UNIs when allowed, and otherwise blocking them.

Appendix III

Encapsulating OMCI messages in Ethernet frames

(This appendix does not form an integral part of this Recommendation.)

Delete this appendix. The pertinent material that formerly appeared in this appendix now appears in Annex C.

Exhibit 1022
IPR2024-00899, USPN 9,806,892
83 of 86

Bibliography

Add the following references to the bibliography:

[b-IETF RFC 2460] IETF RFC 2460 (1998), *Internet protocol, version 6 (IPv6) specification*.

[b-IETF RFC 2463] IETF RFC 2463 (1998), *Internet control message protocol (ICMPv6) for the Internet protocol version 6 (IPv6) specification*.

[b-IETF RFC 2710] IETF RFC 2710 (1999), *Multicast listener discovery (MLD) for IPv6*.

[b-IETF RFC 3315] IETF RFC 3315 (2003), *Dynamic host configuration protocol for IPv6 (DHCPv6)*.

[b-IETF RFC 3736] IETF RFC 3736 (2004), *Stateless dynamic host configuration protocol (DHCP) service for IPv6*.

[b-IETF RFC 4291] IETF RFC 4291 (2006), *IP version 6 addressing architecture*.

[b-IETF RFC 4861] IETF RFC 4861 (2007), *Neighbor discovery for IP version 6 (IPv6)*.

[b-IETF RFC 4862] IETF RFC 4862 (2007), *IPv6 stateless address autoconfiguration*.

[b-IETF RFC 5942] IETF RFC 5942 (2010), *IPv6 subnet model: The relationship between links and subnet prefixes*.

[b-IETF RFC 6106] IETF RFC 6106 (2010), *IPv6 router advertisement options for DNS configuration*.

Exhibit 1022
IPR2024-00899, USPN 9,806,892
84 of 86

SERIES OF ITU-T RECOMMENDATIONS

Series A	Organization of the work of ITU-T
Series D	General tariff principles
Series E	Overall network operation, telephone service, service operation and human factors
Series F	Non-telephone telecommunication services
Series G	**Transmission systems and media, digital systems and networks**
Series H	Audiovisual and multimedia systems
Series I	Integrated services digital network
Series J	Cable networks and transmission of television, sound programme and other multimedia signals
Series K	Protection against interference
Series L	Construction, installation and protection of cables and other elements of outside plant
Series M	Telecommunication management, including TMN and network maintenance
Series N	Maintenance: international sound programme and television transmission circuits
Series O	Specifications of measuring equipment
Series P	Terminals and subjective and objective assessment methods
Series Q	Switching and signalling
Series R	Telegraph transmission
Series S	Telegraph services terminal equipment
Series T	Terminals for telematic services
Series U	Telegraph switching
Series V	Data communication over the telephone network
Series X	Data networks, open system communications and security
Series Y	Global information infrastructure, Internet protocol aspects and next-generation networks
Series Z	Languages and general software aspects for telecommunication systems

Printed in Switzerland
Geneva, 2012