UNITED STATES PATENT AND TRADEMARK OFFICE

BEFORE THE PATENT TRIAL AND APPEAL BOARD

NOKIA OF AMERICA CORPORATION *et al.*,

Petitioners

v.

IANARCH TECHNOLOGIES LIMITED,

Patent Owner

Case No. IPR2024-00899

U.S. Patent No. 9,806,892

PETITION FOR *INTER PARTES* REVIEW

UNDER 35 U.S.C. §312 AND 37 C.F.R. §42.104

Mail Stop PATENT BOARD
Patent Trial and Appeal Board
US Patent and Trademark Office
PO Box 1450
Alexandria, Virginia 22313-1450

TABLE OF CONTENTS

I. INTRODUCTION 1

II. STANDING UNDER 37 C.F.R. §42.104(A) 1

III. PAYMENT OF FEES UNDER 37 C.F.R. §42.103 1

IV. OVERVIEW OF CHALLENGES AND RELIEF REQUESTED ... 1

V. TECHNICAL BACKGROUND 2

VI. '892 PATENT 2

A. Prosecution History 2

B. Priority Date 3

C. POSITA 3

D. Prior Decisions 3

E. Claim Construction 4

VII. SUMMARY OF THE PRIOR ART 6

A. Optically Powered Fiber Networks (Röger) 6

B. ITU-T Standard G.987.3 (2010) 6

C. ITU-T Standard G.988 (2010) 7

D. WO2013014483 (Ghazisaidi) 7

VIII. THE PRIOR ART RENDERS OBVIOUS THE CLAIMS OF THE '892 PATENT 8

A. Ground 1: G.987.3 in View of Röger and Further in View of G.988 Renders Obvious Claims 1-5 and 14-15 of the '892 Patent.8

B. Ground 2: G.987.3 in View of Röger Further in View of G.988 Further in View of Ghazisaidi Renders Obvious Claims 10-13 of the '892 Patent. 54

IX. DISCRETIONARY ISSUES 63

A. §325(d) 63

B. *Fintiv* 66

X. CONCLUSION 70

XI. MANDATORY NOTICES UNDER 37 C.F.R. §42.8 71

A. Real Party in Interest Under 37 C.F.R. §42.8(b)(1) 71

B. Related Matters Under 37 C.F.R. §42.8(b)(2) 71

C. Lead and Back-Up Counsel Under 37 C.F.R. §42.8(b)(3) 72

D. Service Information 73

TABLE OF EXHIBITS

Exhibit	Short Name	Description
Ex. 1001	’892 Patent	U.S. Patent No. 9,806,892
Ex. 1002	’892 File History	File History of U.S. Patent No. 9,806,892
Ex. 1003	Declaration	Declaration of Dr. Alexander V. Sergienko
Ex. 1004	CV	*Curriculum Vitae* of Dr. Alexander V. Sergienko
Ex. 1005	’892 Contentions*	Iarnach’s Infringement Contentions for the ’892 Patent in *Iarnach Techs. v. AT&T Corp., et al.*, Case No. 2:23-cv-0231-JRG (E.D. Tex.)
Ex. 1006	Röger*	M. Röger *et al.*, “Optically Powered Fiber Networks” *Optics Express*, Vol. 16, No. 26 (Dec. 22, 2008)
Ex. 1007	G.987.3*	ITU-T Standard G.987.3 (2010)
Ex. 1008	G.988*	ITU-T Standard G.988 (2010)
Ex. 1009	Ghazisaidi	International Publication No. WO2013014483 to Ghazisaidi
Ex. 1010	G.9807.1*	ITU-T Standard G.9807.1 (2023)
Ex. 1011	Wong*	Shing-Wa Wong *et al.*, “Sleep Mode for Energy Saving PONs: Advantages and Drawbacks” *2009 IEEE Globecom Workshops* (2009)

* Citations throughout are made to the exhibit page number rather than the document page number.

Exhibit	Short Name	Description
Ex. 1012	Dixit*	Abhishek Dixit *et al.*, "ONU power saving modes in next generation optical access networks: progress, efficiency and challenges" *Optics Express*, Vol. 20, No. 26 (Dec. 10, 2012)
Ex. 1013	Amitai	U.S. Patent No. 9,209,897
Ex. 1014	Hood '969	U.S. Patent No. 8,873,969
Ex. 1015	Hood '813	European Patent Specification EP 2 710 813 B1
Ex. 1016	Hood '080	European Patent Specification EP 2 692 080 B1
Ex. 1017	Schmuck	European Patent Specification EP 2 333 989 B1
Ex. 1018	Hall Ellis Declaration	Declaration of Dr. Sylvia D. Hall-Ellis
Ex. 1019	Hall Ellis CV	*Curriculum Vitae* of Dr. Sylvia D. Hall-Ellis
Ex. 1020	Attachment 1A	Hall-Ellis Declaration Attachment 1A
Ex. 1021	Attachment 2A	Hall-Ellis Declaration Attachment 2A
Ex. 1022	Attachment 2B	Hall-Ellis Declaration Attachment 2B
Ex. 1023	Attachment 2C	Hall-Ellis Declaration Attachment 2C
Ex. 1024	Attachment 2D	Hall-Ellis Declaration Attachment 2D
Ex. 1025	Attachment 3A	Hall-Ellis Declaration Attachment 3A
Ex. 1026	Attachment 3B	Hall-Ellis Declaration Attachment 3B
Ex. 1027	Attachment 3C	Hall-Ellis Declaration Attachment 3C
Ex. 1028	Attachment 3D	Hall-Ellis Declaration Attachment 3D

Exhibit	Short Name	Description
Ex. 1029	AT&T Case—DCO	Doc. No. 50, Docket Control Order, *Iarnach Technologies Ltd. v. AT&T Corp. et al.*, No. 2:23-cv-00231 (E.D. Tex.)
Ex. 1030	AT&T Case—Intervenor	Doc. No. 31, Order Granting Nokia's Motion to Intervene, *Iarnach Technologies Ltd. v. AT&T Corp. et al.*, No. 2:23-cv-00231 (E.D. Tex.)
Ex. 1031	Caseload	U.S. District Courts – Judicial Caseload Profile (Dec. 2023)
Ex. 1032	Verizon Case—DCO	Doc. No. 45, Agreed Docket Control Order, *Iarnach Technologies Ltd. v. Verizon Communications, Inc. et al.*, No. 2:23-cv-00631 (E.D. Tex)
Ex. 1033	AT&T Complaint	Doc. No. 1, Complaint, *Iarnach Technologies Ltd. v. AT&T Corp. et al.*, No. 2:23-cv-00231 (E.D. Tex.)
Ex. 1034	Verizon Complaint	Doc. No. 1, Complaint, *Iarnach Technologies Ltd. v. Verizon Communications, Inc. et al.*, No. 2:23-cv-00631 (E.D. Tex)

TABLE OF AUTHORITIES

Cases **Page(s)**

Advanced Bionics, LLC v. MED-EL Elektromedizinische Geräte GmbH,
IPR2019-01469, Paper 6 (PTAB Feb. 13, 2020)..... 63, 64

Amphenol Corporation v. PPC Broadband, Inc.,
IPR2023-01363, Paper 9 (PTAB Mar. 20, 2024).....65

Apple v. Fintiv, Inc.,
IPR2020-00019, Paper 11 (PTAB Mar. 20, 2020)..... 66, 68, 69

Cf. Comcast Cable Commn's, LLC v. Rovi Guides, Inc.,
IPR2019-00231, Paper 14 (PTAB May 20, 2019) 70

Chemtronics USA, Inc. v. FlatFrog Laboratories AB, IPR2024-00015, Paper 11
(PTAB Apr. 22, 2024) 66

Dish Network v. Broadband iTV,
IPR2020-01280, Paper 17 (PTAB Feb. 4, 2021)..... 68, 69

Godbersen-Smith Constr. Co. v. Guntert & Zimmerman Const. Div., Inc.
IPR2021-00050, Paper 24 (PTAB May 7, 2021) 64

HP Inc. et al. v. Neodron Ltd.,
IPR2020-00459, Paper 17 (PTAB Sep. 9, 2020).....67

Iarnach Technologies Ltd. v. AT&T Corp. et al.,
No. 2:23-cv-00231 (E.D. Tex.).....3, 72

Iarnach Technologies Ltd. v. Verizon Communications, Inc. et al.,
No. 2:23-cv-00631 (E.D. Tex.).....3, 72

NHK Spring Co. v. Intri-Plex Techs., Inc.,
IPR2018-00752, Paper 8 (PTAB Sept. 12, 2018).....66

Oticon Med. AB v. Cochlear Ltd.,
IPR2019-00975, Paper 15 (PTAB Oct. 16, 2019).....65

Phillips v. AWH Corp.,
415 F.3d 1303 (Fed. Cir. 2005) 4

Samsung Elecs. Co. v. Dodots Licensing Sols. LLC,
IPR2023- 00756, Paper 9 (PTAB Oct. 11, 2023) 65

Sand Revolution II LLC v. Continental Intermodal Group-Trucking LLC,
IPR2019-01393, Paper 24 (PTAB June 16, 2020) 69, 70

Tianma Microelectronics Co., v. Japan Display Inc.,
IPR2021-01058, Paper 16 (PTAB Jan. 5, 2022) 65

VMWare, Inc. v. Intellectual Ventures I LLC,
IPR2020-00470, Paper 13 (PTAB Aug. 18, 2020) 67

Statutes

35 U.S.C. § 102(a) 6, 7

35 U.S.C. § 102(e) 8

35 U.S.C. § 103(a) 1

35 U.S.C. § 112(f) 4

35 U.S.C. § 282(b) 4

35 U.S.C. § 314(a) 66

35 U.S.C. § 325(d) 63, 66

35 U.S.C. §§ 102(a),(b) 6

35 U.S.C. §§ 311–319 1

Regulations

§ 42.104(b)(1)-(2) 1

§ 42.22(a)(1) 1

37 C.F.R § 42.10(b) 73

37 C.F.R. § 42 1

37 C.F.R. § 42.103 1

37 C.F.R. § 42.104(a) 1

37 C.F.R. § 42.105 79

37 C.F.R. § 42.24(a)(1)(i) 78

37 C.F.R. § 42.6(e) 79

37 C.F.R. § 42.8 71

37 C.F.R. § 42.8(b)(1) 71

37 C.F.R. § 42.8(b)(2) 71

37 C.F.R. § 42.8(b)(3) 72

37 C.F.R. § 42.8(b)(4) 73

I. INTRODUCTION

Nokia of America Corporation ("Nokia") and AT&T Services Inc. ("AT&T") (collectively, "Petitioners") seek IPR under 35 U.S.C. §§311–319 and 37 C.F.R. §42 of Claims 1-11 ("the Challenged Claims") of U.S. Patent No. 8,934,359 ("the '359 Patent"). Petitioners request cancellation of the Challenged Claims.

II. STANDING UNDER 37 C.F.R. §42.104(a)

Petitioner certifies that the '892 Patent is available for IPR, and that Petitioner is not barred or estopped from requesting IPR.

III. PAYMENT OF FEES UNDER 37 C.F.R. §42.103

Petitioner authorizes Account No. 16-0605 to be charged.

IV. OVERVIEW OF CHALLENGES AND RELIEF REQUESTED

Pursuant to §42.22(a)(1) and §42.104(b)(1)-(2), Petitioner requests cancellation of the Challenged Claims pursuant to the grounds below. Additional support is provided in the Declaration of Dr. Sergienko (Ex. 1003).

Ground 1: Claims 1-5 and 14-15 are unpatentable under pre-AIA 35 U.S.C. §103(a) over G.987.3 in view of Röger further in view of G.988.

Ground 2: Claims 10-13 are unpatentable under pre-AIA 35 U.S.C. §103(a) over G.987.3 in view of Röger further in view of G.988 further in view of Ghazisaidi.

V. TECHNICAL BACKGROUND

A Passive Optical Network (PON) is a fiber-optic telecommunications network that provides Ethernet connectivity from a main data source to endpoints. PONs consist of a network-side interface at the main source, or head-end, and a client-side interface at the endpoints. Ex. 1003, ¶39-45. Optical Line Termination (OLT) (used interchangeably with Optical Line Terminal) provides the network-side interface of the network while Optical Network Terminations (ONTs), or Optical Network Units (ONUs), provide the client-side or user-side interface. ONTs and ONUs are virtually identical from a functionality point of view and will be referred to in unison throughout. Ex. 1003, ¶42.

VI. '892 PATENT

A. Prosecution History

There were several rejections over prior art, including G.987.3. Ex. 1002, 38, 80-87, 130-135. Patent Owner did not dispute the prior art status of G.987.3. *See* Ex. 1002. Applicant amended independent claim 1 to recite "transitioning the ONU directly from the first state to the second state and transitioning the ONU directly from the second state to the first state, based on a power management rule." Ex. 1002, 28. A Notice of Allowance issued. Ex. 1002, 9-13.

B. Priority Date

The ’892 Patent issued from U.S. Patent Application No. 14/414,698 filed January 13, 2015. The application is a national stage entry of PCT application no. PCT/US2013/05033, filed July 15, 2013. The application claims foreign priority to PCT application PCT/CN2012/78649, filed July 13, 2012. For this proceeding only, Petitioners assume the earliest alleged priority date is not earlier than July 13, 2012.

C. POSITA

A POSITA at the time of the alleged invention of the ’892 Patent would have had at least a bachelor’s degree in electrical engineering, computer engineering, or similar discipline and had at least two years of experience with optical communications and networks. Ex. 1003, ¶22. A person with a different degree but additional relevant experience could still qualify if the additional experience compensates for the different educational background. *Id.*

D. Prior Decisions

The ’892 Patent is currently asserted in:

- *Iarnach Technologies Ltd. v. AT&T Corp. et al.*, No. 2:23-cv-00231 (E.D. Tex.) (hereafter, “AT&T Case”);
- *Iarnach Technologies Ltd. v. Verizon Communications, Inc. et al.*, No. 2:23-cv-00631 (E.D. Tex.) (hereafter, “Verizon Case”).

Petitioner AT&T is a defendant, and Petitioner Nokia is an intervenor, in the AT&T Case. Ex. 1030. No dispositive judgments or claim construction orders have issued in this case. A claim construction hearing is set for September 19, 2024; the dispositive motion deadline is set for December 5, 2024; and jury selection is presently set for March 17, 2025. Ex. 1029, 1-4. Likewise, no dispositive judgments or claim construction orders have issued in the Verizon Case. A claim construction hearing is set for March 11, 2025; the dispositive motion deadline is set for June 16, 2025; and jury selection is currently set for September 22, 2025. Ex. 1032.

E. Claim Construction

The claims are construed herein "using the same claim construction standard that would be used to construe the claim in a civil action under 35 U.S.C. §282(b)." 37 C.F.R. §42.100(b). Unless otherwise specified, the terms should receive their respective plain and ordinary meaning as understood by a POSITA under *Phillips v. AWH Corp.*, 415 F.3d 1303 (Fed. Cir. 2005).

Certain elements of claims 10 and 13 should be construed under 35 U.S.C. §112(f). Specifically, the following material claim terms should be construed under 35 U.S.C. §112(f).

- "wherein the processor includes ***means for transitioning the ONU directly from the first state to the second state and means for***

transitioning the ONU directly from the second state to the first state, based on a power management rule" (10[D]).

- "wherein the processor includes ***means for specifying a first time period for operation in the first low power state and a second time period for operation in the second low power state***" (Claim 13).

The '892 Patent generally discloses a flow chart, Figure 8, that describes a method 800 that operates on an ONU. Ex. 1001, FIG. 8; Ex. 1003, ¶53. Further, the '892 Patent states that "[t]he processes and logic flows described in this document can be performed by one or more programmable processors executing one or more computer programs to perform functions by operating on input data and generating output." Ex. 1001, 14:8-11. Further, the '892 Patent states that "[p]rocessors suitable for the execution of a computer program include, by way of example, both general purpose and special purpose microprocessors, and any one or more processors of any kind of digital computer." Ex. 1001, 14:17-20. As such, the structure for the means enumerated above in Claim 10 and Claim 13 are each designed to be implemented on a processor that can execute computer program instructions. Ex. 1001,14:8-39; Ex. 1003, ¶51-53.

VII. SUMMARY OF THE PRIOR ART

A. Optically Powered Fiber Networks (Röger)

Röger was published on December 17, 2008. Ex. 1006. Dr. Hall-Ellis has testified that the issue of the open access journal *Optics Express* that included Röger was "publicly available on December 17, 2008, because by that date it had been cataloged and indexed at the Library of Congress, made part of the OCLC bibliographic database, and received at the National Library of Medicine." Ex. 1018, ¶67. The publication date is confirmed by at least Schmuck. Ex. 1017, pg. 1, [0005], pg. 15. Röger qualifies as prior art under at least pre-AIA 35 U.S.C. §§102(a),(b). Röger was not cited and was not considered during the prosecution.

B. ITU-T Standard G.987.3 (2010)

G.987.3 is an ITU-T standard approved on October 7, 2010 and published on October 3, 2011. Ex. 1007, 1, 3. G.987.3 qualifies as prior art under at least pre-AIA 35 U.S.C. §102(a). G.987.3 was identified in the specification of the '892 patent and was cited in prosecution. Ex. 1002, 25, 38, 40-41, 69-73, 82-88, 144, 162. G.987.3 was cited during prosecution and Patent Owner did not dispute its prior art status. *See supra*, §VI.A. Thus, there can be no dispute that G.987.3 was publicly available prior to the priority date of the '892 patent.

Dr. Hall-Ellis testified that G.987.3 was "publicly available on October 3, 2011, because by that date it had been approved by the ITU-T Study Group 15 and

posted on the ITU website." Ex. 1018, ¶57. The public availability prior to the priority date of the '892 patent is further confirmed by numerous other patents and printed publications that refer to G.987.3. *See, e.g.*, Ex. 1013, pg. 2, col. 2: 9-49, 5:36-53, col. 7:1-5; Ex. 1014, pg. 2, col. 1:19-27; Ex. 1015, [0002], [0038], pg. 24; Ex. 1016, pg. 1, [0010], [0019], [0026]-[0027], pg. 20.

C. ITU-T Standard G.988 (2010)

G.988 is an ITU-T standard approved on October 7, 2010 and published on September 22, 2011. Ex. 1008, 1, 3. Dr. Hall-Ellis has testified that G.988 was "publicly available on September 22, 2011, because by that date it had been approved by the ITU-T Study Group 15 and posted on the IUT website." Ex. 1018, ¶60. The publication date is confirmed by Amitai. *See* Ex. 1013, pg. 2, col. 5:31-40. G.988 qualifies as prior art under at least pre-AIA 35 U.S.C. §102(a). G.988 was not cited and was not considered during prosecution.

D. WO2013014483 (Ghazisaidi)

Ghazisaidi is an international application filed on July 27, 2011, designating the United States and published in English. Ex. 1009, Cover; *see also* MPEP § 2136; *see also EnOcean GmbH v. Face Int'l Corp*., 742 F.3d 955, 957 n.3 (Fed. Cir. 2014) ("[s]ince the Burrow reference was filed on or after November 29, 2000, designated the United States, and was published in English, it is available as prior art as of its

PCT filing date."). Ghazisaidi qualifies as prior art under at least pre-AIA 35 U.S.C. §102(e). Ghazisaidi was not cited and was not considered during prosecution.

VIII. THE PRIOR ART RENDERS OBVIOUS THE CLAIMS OF THE '892 PATENT

A. Ground 1: G.987.3 in View of Röger and Further in View of G.988 Renders Obvious Claims 1-5 and 14-15 of the '892 Patent.

The ITU-T documents, including G.987.3, define and coordinate standards for telecommunications technologies around the world including PONs. Ex. 1003, ¶63. While individual ONUs, OLTs, and PONs may differ in their implementation or which aspects of recommendations are supported, the ITU-T recommendations allow standardized interoperation with other components.

There can be no dispute that the majority of the elements of the independent claims of the '892 patent are disclosed by G.987.3. Ex. 1003, ¶64. In its related infringement contentions, Patent Owner has mapped most claim elements to the later ITU-T recommendation G.9807.1. Ex. 1005, 1-25; Ex. 1003, ¶64. But many of the cited sections in the infringement contentions are the same or substantially similar to sections present in G.987.3. Ex. 1005, 1-11; Ex. 1007, 97-106; Ex. 1003, ¶64. In fact, every claim element from the infringement contentions except for 1[D] is mapped to a section of G.9807.1 that is the same or substantially similar to G.987.3. Ex. 1005, 1-11, 15-25; Ex. 1007, 97-106; Ex. 1003, ¶64.

To the extent that Patent Owner can argue that there is any claim recitation that was not disclosed by or obvious in view of G.987.3, it is 1[D] – "transitioning the ONU directly from the first state to the second state and transitioning the ONU directly from the second state to the first state, based on a power management rule." As is disclosed below and to the extent that it is argued that 1[D] is not taught or suggested by the state diagram of G.987.3 and the POSITA's understanding of the market pressure to reduce power consumption, the POSITA would have understood that direct transitions were well known in the art. Ex. 1003, ¶65. For at least these reasons and for the reasons outlined below in Grounds 1-2, the claims at issue are unpatentable. Ex. 1003, ¶55-65.

Motivation to Combine

A POSITA would have been motivated to combine G.987.3 with G.988 and Röger for at least the following reasons. First, G.987.3 and G.988 are both ITU-T standards that are intended to operate together and inform the implementation of optical networks. Ex. 1007, 1; Ex. 1008, 1; Ex. 1003, ¶66. In fact, G.987.3 and G.988 each explicitly reference one another. Ex. 1007, 9-10, 97-98; Ex. 1008, 7-8; Ex. 1003, ¶66. Moreover, each of G.987.3 and G.988 are standards directed towards optical systems including ONUs. Ex. 1007, 10, 97-106; Ex. 1008, 7, 12, 18; Ex. 1003, ¶66. Thus, there can be no dispute that a POSITA would have been motivated

to combine and, in fact, routinely did combine (and, in some cases, was required to combine) G.987.3 and G.988 when implementing optical networks. Ex. 1003, ¶66.

Like G.987.3 and G.988, the disclosures in Röger are directed towards optical communications in a PON. Ex. 1006, 2; Ex. 1007, 1, 3; Ex. 1008, 12; Ex. 1003, ¶67. All of G.987.3, G.988 and Röger are directed to communications between OLTs and ONUs. Ex. 1006, 5; Ex. 1007, 10, 97-106; Ex. 1008, 3; Ex. 1003, ¶67.

Additionally, G.987.3, G.988, and Röger disclose ONUs operating in a first state where a receiver is on and a transmitter is off and a second state where both the receiver and transmitter are off. Ex. 1006, 598, 11-12; Ex. 1007, 100-102; Ex. 1008, 81; Ex. 1003, ¶68. G.987.3 and Röger specifically suggest that these modes allow the ONUs to save power and address transitions between power states. Ex. 1006, 6-8, 10-13; Ex. 1007, 97-106; Ex. 1003, ¶68. G.987.3, however, does not explicitly allow direct transitions between a Doze mode (which includes the first state) and Cyclic sleep mode (which includes the second state). Ex. 1007, 101; Ex. 1003, ¶68.

It should be noted that note 2 of the OLT state transition and output table in G.987.3 states that "[d]irect transitions between Doze mode and Cyclic Sleep mode are disallowed." Ex. 1007, 105; Ex. 1003, ¶69. This note is only applicable to the OLT, and there is no similar restriction or note in the ONU state transition and output table. In fact, the same note is present in the OLT state transition and output table of G.9807.1, while direct transitions between the ONU's Asleep and Listen states are

incorporated into a single LowPower state (watchful sleep state). Ex. 1010, 235-238; Ex. 1003, ¶69. G.9807.1 allows a LowPowerWatch state for the OLT to support ONUs in the LowPower state but continues to disallow direct transitions between Doze and Cyclic sleep mode, indicating that these transitions are a responsibility of internal ONU management. G.987.3 further states that the OLT is responsible for dealing with the possibility that the ONU does not receive downstream traffic from the OLT and allow for extra response delays if the ONU can't respond in a normal time. Ex. 1007, 106; Ex. 1003, ¶69. Thus, it is the responsibility of the OLT to prepare for an ONU performing direct transitions.

It would have been obvious to the POSITA to allow for direct transitions between a first state (e.g., Listen mode) and a second state (e.g., Asleep mode). Ex. 1003, ¶70. This modification to direct transitions would have been driven by a well-known problem in the field, reducing power consumption. Ex. 1003, ¶70. G.987.3 states, "it is desirable to reduce the power consumed by an ONU as much as possible." Ex. 1007, 97; Ex. 1003, ¶70. As was well known, it was desirable to reduce power to realize "more efficient realizations of given functions." Ex. 1007, 97; Ex. 1003, ¶70. Greater power consumption increases cost, and in a PON with multiple ONUs, saving power at each ONU can lead to a significant reduction in total cost. Moreover, there are a finite number of solutions to reduce power consumption in optical networks. Possible transitions between different low power

states are even more limited given the limited numbers of power states and scenarios for an ONU to transition between them. Ex. 1003, ¶70. Therefore, it would have been obvious to a POSITA and obvious to try the finite number of transitions and find that direct transition between Listen mode and Asleep sleep mode reduces power consumption compared to transitioning to a full power state in between Listen mode and Asleep sleep mode. Ex. 1003, ¶70.

Regardless, it was well known as of the effective filing date of the '892 Patent for an ONU to directly transition between two low power states to save power. Ex. 1003, ¶71. Specifically, Röger teaches that ONUs may transition directly back and forth between the first state and the second state as part of a "low-energy" protocol, allowing efficient use of energy transmitted to ONUs. Ex. 1006, 6-8, 10-13; Ex. 1003, ¶71. This "low-energy" protocol allows an ONU to periodically listen for signals from an OLT without wasting power by turning on their transmitters. Ex. 1006, 6-8, 10-13; Ex. 1003, ¶71.

A POSITA would have been motivated to apply these direct transitions to the ONUs of G.987.3 in view of the known advancements in technology at the time.[1]

---

[1] Röger would have been developed in view of an earlier version of the ITU-T recommendations for PONs. Ex. 1003, ¶72.

Ex. 1003, ¶72. Advancements in chip speed that occurred before the priority date of the ’892 patent made it more practical to periodically turn on and off a receiver while a transmitter remained off in an ONU. Ex. 1003, ¶72. In particular, a POSITA would have been motivated to apply the direct transitions of Röger in light of advancements in how fast a receiver could be switched on. Ex. 1003, ¶72. Periodically turning on a receiver was previously less efficient due to a slower continuous mode (CM) clock and data recovery (CDR) time of 2-5 milliseconds for each RxOn event for earlier electronic circuits. Ex. 1011, 3-4; Ex. 1003, ¶72. But prior to the priority date of the ’892 patent, it was known that a modern Burst mode (BM) CDR technology that utilized a local oscillator unit at each ONU reduced the CDR time down to 1-10 nanoseconds. Ex. 1011, 3-4; Ex. 1003, ¶72. This reduced time for an RxON event made it much more practical to periodically switch the receiver on and off while keeping the transmitter off, since delays in CDR and additional power consumption were reduced.[2] Ex. 1003, ¶72. This improvement to electronic chip and circuits technology also reduced the attractiveness of leaving an ONU in a receive-only state

[2] Indeed, other authors around the time of the priority date acknowledged that remaining in a receive mode only made sense for ONUs that are equipped with CM-CDR rather than BM-CDR. Ex. 1012, 4-5.

since additional power could be saved by periodically switching the receiver off without causing significant delay during transition. Ex. 1003, ¶72.

Given this well-known improvement to electronic chip and circuits technology, a POSITA would have been motivated to apply the direct transitions between sleep and receive states from Röger to G.987.3 because Röger specifically states that its protocol allows ONUs to operate with "the least possible power consumption" to "save both energy and communication bandwidth." Ex. 1006, 6-7; Ex. 1003, ¶73. Saving energy and communication bandwidth allows the PONs to perform their functionality with more efficiency. Ex. 1003, ¶73.

A POSITA would have had a reasonable expectation of success when applying the direct transitions of Röger to the PON of G.987.3, since both systems include ONUs communicating with an OLT. Ex. 1006, 5; Ex. 1007, 10; Ex. 1003, ¶74. G.987.3 states that when an ONU receives a Sleep_Allow(ON) PLOAM event, the ONU has discretion to exercise any power management mode including doze or sleep mode, which would in no way preclude the ONU from alternating between a doze mode and a sleep mode as described in Röger. Ex. 1006, 6-8, 10-13; Ex. 1007, 10, 97-106; Ex. 1003, ¶74. An ONU of G.987.3 would be operable to directly transition back and forth as shown in Röger because the ONU of Röger would be standardized based on ITU-T recommendations. The ONU would alternate between sleep and doze modes, occasionally waking up to an Aware state identical to

DozeAware or SleepAware (i.e., both have a transmitter and receiver turned on), allowing the ONU to transition between the Asleep and Listen states would not impact these functions of the ONU. Ex. 1007, 100-102; Ex. 1003, ¶74.

Claim 1[A]: A method of optical communication in a passive optical network, comprising:

To the extent the preamble is limiting, G.987.3 teaches Claim 1[A]. Ex. 1003, ¶75. G.987.3 teaches "10-Gigabit-capable [PON] systems," including ONUs and OLTs in communication with each other. Ex. 1007, 3, 10, 97-106; Ex. 1003, ¶75. Thus, G.987.3 teaches 1[A]. Ex. 1003, ¶75; *see also* Ex. 1005, 2-8.

Similarly, Röger, which was understood to operate with prior ITU-T networks, envisages optical powering of "short-range [PON]s." Ex. 1006, 2; Ex. 1003, ¶76. For example, Röger teaches an OLT in communication with ONUs. Ex. 1006, 5; Ex. 1003, ¶76. Thus, Röger likewise teaches 1[A]. Ex. 1003, ¶76; *see also* Ex. 1005, 2-8.

1[B]: operating an optical network unit (ONU) in a first state in which a transmitter of the ONU is turned off and a receiver of the ONU is turned on;

The PON of G.987.3 includes ONUs that may operate in a "Listen" state in which "[t]he ONU receiver is on" and "the transmitter is off." Ex. 1007, 100. Ex. 1003, ¶77. As such, the "Listen" state of G.987.3 is the claimed first state. Ex. 1003,

¶77. Annotated Figure 16-1 (reproduced below)[3] of G.987.3 illustrates a state diagram for the ONU including the "Listen" state. Ex. 1007, 101; Ex. 1003, ¶77. Thus, G.987.3 teaches 1[B]. Ex. 1003, ¶77; *see also* Ex. 1005, 809.

Ex. 1007, Fig. 16-1 (annotated)

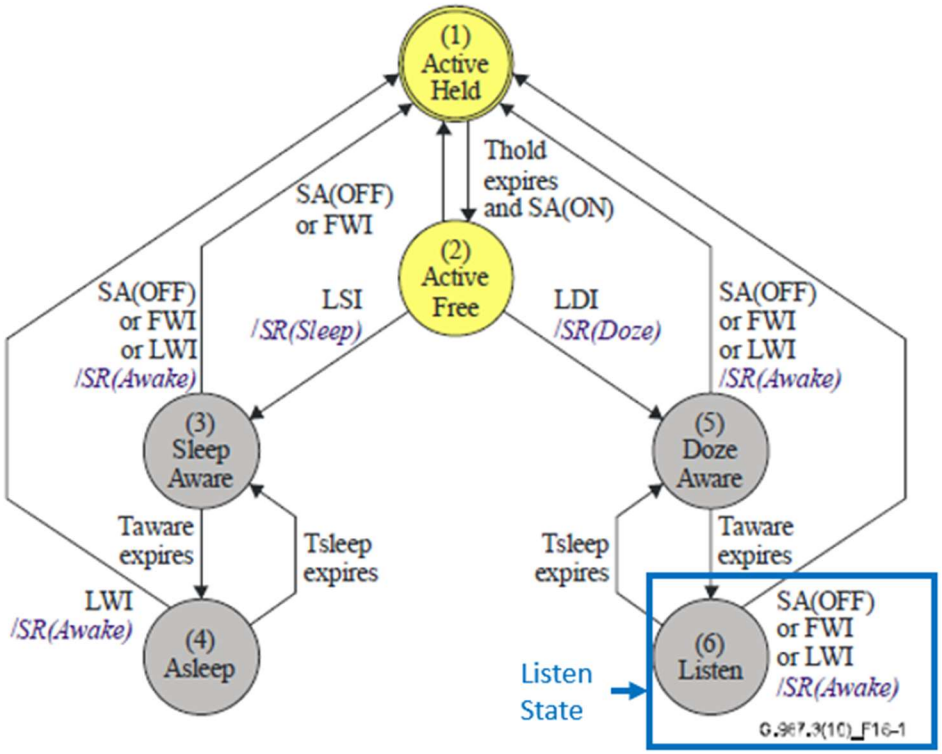

Like G.987.3, Röger teaches 1[B]. Ex. 1003, ¶78. Röger teaches that subscribers (ONUs) in a sleep mode (i.e., with receiver and transmitter off) "***activate their basic receiver circuitry***" during wake-up intervals to "listen for the [OLT's] polling." Ex. 1006, 8; Ex. 1003, ¶78. Thus, the ONU of Röger transitions to a

[3] Figure 7a of the '892 Patent is admitted prior art and shows the same state diagram.

"receive" mode ("first state") with its receiver on and its transmitter off. Ex. 1003, ¶78. Additionally, the blue boxes in annotated table 2 (reproduced below) shows the receive mode with a receiver (but no transmitter) powered on. Ex. 1006, 11; Ex. 1003, ¶78. Thus, Röger likewise teaches 1[B]. Ex. 1003, ¶78; *see also* Ex. 1005, 8-9.

Ex. 1006, Table 2

Table 2. Subscriber operating modes and total DC supply currents I_b for a supply voltage $V_b = 3.6$ V.

Subscriber modes		Attributes	μC current $I_{\mu C}$	Supply current I_b	Total I_b
Sleep	μC low-power modes	Low-Q clock	0.5 μA	I_{Sleep}	0.5 μA
Snooze		High-Q clock	1 μA	I_{Snooze}	1 μA
Receive	μC active mode	Receiver on	3.5 mA	I_{Rx}	6 mA
Transceive		Transceiver on		I_{RxTx}	11 mA

1[C]: operating the ONU in a second state in which both the transmitter and the receiver are turned off;

G.987.3 teaches that an ONU may operate in an "Asleep" state in which "[t]he ONU shuts down both its receiver and transmitter." Ex. 1007, 100. Ex. 1003, ¶79. As such, the "Asleep" state of G.987.3 is the claimed second state. Ex. 1003, ¶79. Annotated Figure 16-1 (reproduced below) of G.987.3 illustrates a state diagram for the ONU including the "Asleep" state. Ex. 1007, 101; Ex. 1003, ¶79. Thus, G.987.3 teaches 1[C]. Ex. 1003, ¶79; *see also* Ex. 1005, 10-11.

Ex. 1007, Fig. 16-1 (annotated)

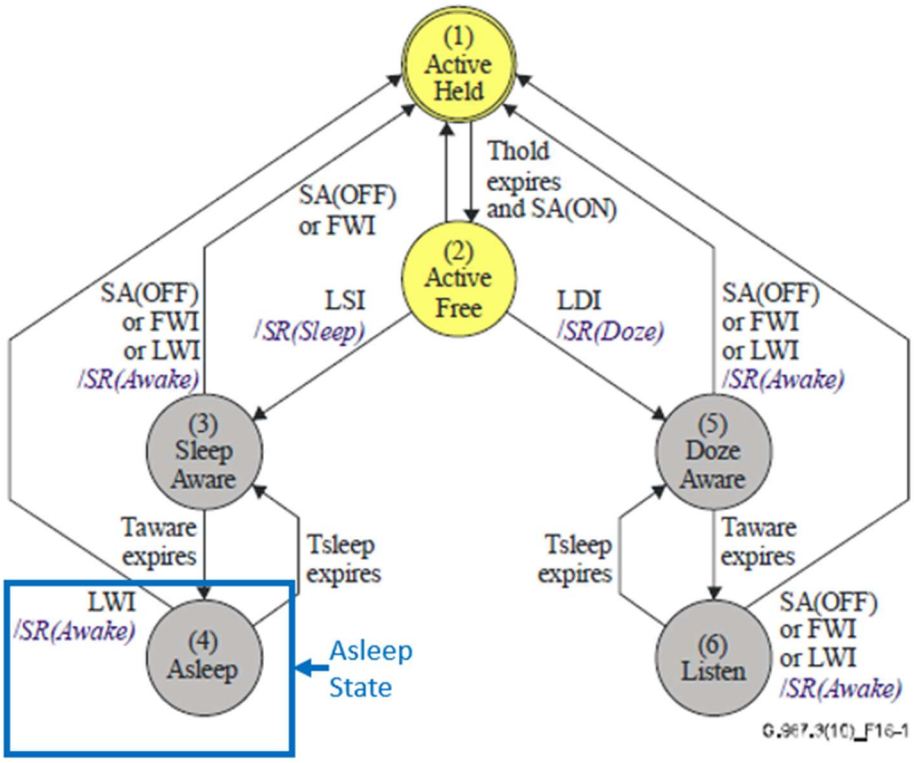

Likewise, Röger teaches 1[C]. Ex. 1003, ¶80. Röger teaches a sleep mode ("second state") for ONTs which requires "[a]ll communication circuitry switched off." Ex, 1006, 6; Ex. 1003, ¶80. Röger further teaches a "snooze mode" in which "all dispensable circuitry" (including the receiver and transmitter) is shut down. Ex. 1006, 9; Ex. 1003, ¶80. The sleep and snooze modes are boxed in blue in annotated table 2 (reproduced below). Ex. 1006, 11; Ex. 1003, ¶80. Thus, Röger likewise teaches 1[C]. Ex. 1003, ¶80; *see also* Ex. 1005, 10-11.

Ex. 1006, Table 2

Table 2. Subscriber operating modes and total DC supply currents I_b for a supply voltage $V_b = 3.6$ V.

Subscriber modes		Attributes	μC current $I_{\mu C}$	Supply current I_b	Total I_b
Sleep	μC low-power modes	Low-Q clock	0.5 μA	I_{Sleep}	0.5 μA
Snooze		High-Q clock	1 μA	I_{Snooze}	1 μA
Receive	μC active mode	Receiver on	3.5 mA	I_{Rx}	6 mA
Transceive		Transceiver on		I_{RxTx}	11 mA

1[D]: transitioning the ONU directly from the first state to the second state and transitioning the ONU directly from the second state to the first state, based on a power management rule;

G.987.3 teaches indirect transitions between the "Listen" state ("first state") and the "Asleep" state ("second state"). Ex. 1007, 100-102. Ex. 1003, ¶81. As discussed above, a POSITA would have been motivated to apply direct transitions between these states to G.987.3 to save energy by not powering on the transmitter when transitioning between the "Listen" and "Asleep" states. Ex. 1003, ¶81; *see supra* Motivation to Combine. This is also consistent with Patent Owner's position in its related infringement contentions, which contend that 1[D] is met by a "maximum sleep interval" (Isleep/Ilowpower) in a later version of G.988, which specifies "the maximum time the ONU spends in its asleep, listen, or low-power states." Ex. 1005, 12. Similarly, G.987.3 and G.988 each disclose the "maximum sleep interval" as Isleep, specifying "the maximum time the ONU spends in its asleep or listen states." Ex. 1008, 82; Ex. 1007 98; Ex. 1003, ¶81.

In addition to G.987.3 rendering 1[D] obvious, the combination of G.987.3 and Röger render 1[D] unpatentable. Ex. 1003, ¶82. Röger teaches an "efficient protocol" that saves "both energy and communication bandwidth" by using a rendezvous sequence to inform sleep mode subscribers of future communications. Ex. 1006, 6-8; Ex. 1003, ¶82. Subscriber stations (ONUs) are in a sleep mode where "all communication circuitry is switched off." Ex. 1006, 6; Ex. 1003, ¶82. The subscriber stations then "***activate their basic receiver circuitry"*** for a wake-up period and "listen for the [OLT's] polling." Ex. 1006, 6-8; Ex. 1003, ¶82. Thus, the subscriber stations (ONUs) directly transition from the sleep mode ("first state") to a receive state ("second state") where the receiver is turned on and the transmitter remains off. Ex. 1006, 6-8; Ex. 1003, ¶82.

If a rendezvous signal is not received by the subscriber station during the wake-up period, "the subscribers ***go back to sleep***." Ex. 1006, 6-8; Ex. 1003, ¶83. Thus, the subscriber stations (ONUs) directly transition from a receive mode ("first state") where the receiver is turned on and the transmitter is turned off to a sleep mode ("second state") where both the receiver and transmitter are turned off. Ex. 1006, 6-8, 10-13; Ex. 1003, ¶83. Therefore, as illustrated further by annotated Figure 2 (reproduced below), the subscriber station S3 (among other examples) first operates in a sleep mode ("second state") illustrated by the first low portion of the line representing subscriber station S3, then transitions directly into a receive mode

("first state") illustrated by the first high portion of the line representing subscriber station S3, then finally transitions directly back into the sleep mode ("second state") illustrated by the second low portion of the line representing subscriber station S3. Ex. 1006, 7; Ex. 1003, ¶83. As such, the combination of G.987.3 and Röger demonstrate that the direct transitions claimed 1[D] are unpatentable. Ex. 1003, ¶83.

Ex. 1006, Fig. 2 (annotated)

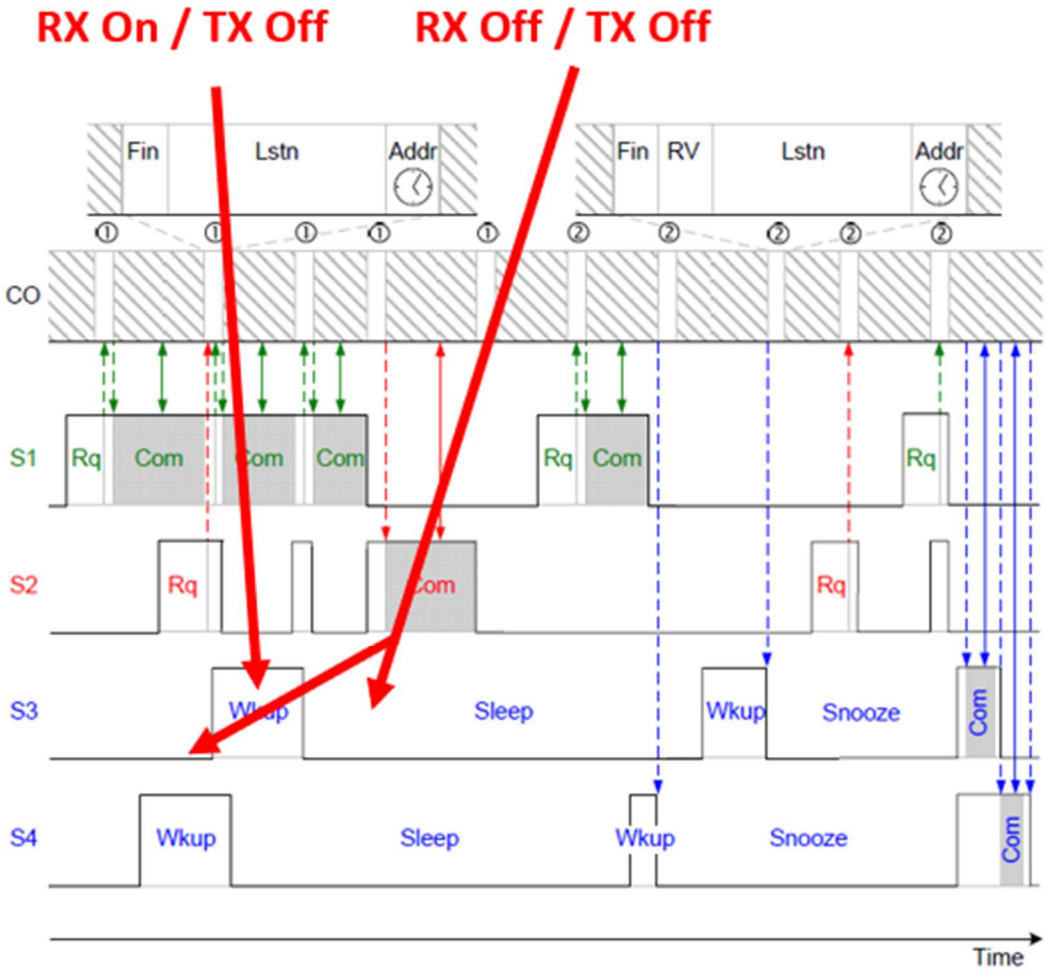

If the subscriber station receives a rendezvous signal during the wake-up period, the subscriber station transitions directly from the receive mode ("first state")

directly an "energy saving ***snooze mode***" ("second state"). Ex. 1006, 8; Ex. 1003, ¶84. The subscriber station "sets a high precision clock to the rendezvous time." Ex. 1006, 8; Ex. 1003, ¶84. Furthermore, "[a]t the rendezvous time ***all subscribers switch to receive mode***," and later activate the transmitter to respond to polling. Ex. 1006, 12-13; Ex. 1003, ¶84. Thus, the ONUs of Röger transition directly from a receive mode ("first state") to a snooze mode ("second state") and directly back to the receive mode ("first state") at the rendezvous time.[4] As such, a POSITA would have understood that the combination demonstrates that the direct transitions claimed 1[D] are unpatentable. *Id*.

With respect to the "power management rule", the '892 patent generally describes that a power management rule "may be based on the timing parameters that control how long the ONU can be in the first or the second mode," "transitioning based on user input," "responding incoming control messages from the OLT that

[4] Indeed, Figure 6 also illustrates yet another direct transition from snooze mode ("second state") to receive mode (transition to dark blue) ("first state") at the rendezvous time and a transition out of dark blue receive mode ("first state") in response to an End command, which puts the listening subscribers to sleep ("second state"). *Id.* (confirming that dark blue is the receive mode). Ex. 1006, 12-13.

specify entering or exiting the first and the second states, and so on." Ex. 1001, 12:31-45; Ex. 1003, ¶85. These several example power management rules 'generally include local and external causes of state transitions. Ex. 1001, 12:31-45; Ex. 1003, ¶85.

Like the rules in the '892 patent that cause state transitions, the direct transition of Röger from the sleep mode ("second state") to the receive mode ("first state") are made based on a "power management rule" that subscriber stations should alternate back and forth between the sleep mode ("second state") and receive mode ("first state") until receiving a message to do otherwise. Ex. 1003, ¶86. Röger describes ONUs entering receive mode during "nearly periodically appearing wake-up intervals." Ex. 1006, 7; Ex. 1003, ¶86. The "power management rule" causes the ONUs of Röger to transition directly from the receive mode ("first state") to the sleep mode ("second state") at the end of a time T_{Wkup}. Ex. 1006, 12-13; Ex. 1003, ¶86. Thus, Röger teaches 1[D]. Ex. 1003, ¶86; *see also* Ex. 1005, 11-15.

1[E]: ensuring the ONU is fully powered up, synchronized, and capable of responding to both upstream and downstream traffic and control before exiting the first state or the second state;

Regarding the "Asleep" state ("second state"), G.987.3 teaches that "before exiting this state, the ONU ensures that it is fully powered up, synchronized, and capable of responding to both upstream and downstream traffic and control." Ex. 1007, 100; Ex. 1003, ¶87. Thus, G.987.3 teaches ensuring the ONU is fully powered

up, synchronized, and capable of responding to both upstream and downstream traffic and control before exiting the second state. Ex. 1003, ¶87.

Regarding the "Listen" state ("first state"), G.987.3 teaches that "before exiting this state, the ONU ensures that it is fully powered up and capable of responding to both upstream and downstream traffic and control." Ex. 1007, 100; Ex. 1003, ¶88. A POSITA would have understood that the ONU would have needed to be synchronized before exiting the listen state to be capable of responding to upstream and downstream traffic and control. Ex. 1003, ¶88; *see also* Ex. 1005, 15-16.

This is also consistent with Patent Owner's position in its related infringement contentions, which contend that [1E] is met by G.9807.1. G.9807.1 identically states that before exiting a low power state, "the ONU ensures that it is fully powered up and capable of responding to both upstream and downstream traffic and control." Ex. 1005, 16. Patent Owner states that "[i]n order to respond to upstream and downstream traffic and control, ***the ONU is necessarily synchronized.***" Ex. 1005, 16. Thus, G.987.3 teaches 1[E]. Ex. 1003, ¶89; *see also* Ex. 1005, 15-16.

Likewise, Röger teaches that ONUs "maintain time synchronism with the [OLT]" in a snooze mode ("second state"). Ex. 1006, 6; Ex. 1003, ¶90. The ONUs are configured to use a "precise quartz clock" to wake-up from the snooze mode ("second state") "exactly at a rendezvous time" and communicate with an OLT, as

illustrated in annotated Figure 6 (reproduced below). Ex. 1006, 8, 12; Ex. 1003, ¶90. Röger states that "[f]our randomly self-activating subscribers (S3 … 6) ***synchronize*** and communicate with the [OLT]" at the rendezvous time. Ex. 1006, 12. A POSITA would have known that the ONUs would have had to be fully powered up and capable of responding to upstream and downstream traffic (i.e., capable of receiving and transmitting messages between the ONU and OLT) before exiting the snooze mode ("second state") or receive mode ("first state"), in order to communicate with the OLT. Ex. 1003, ¶90. Thus, Röger likewise discloses ensuring the ONU is fully powered up, synchronized, and capable of responding to both upstream and downstream traffic and control before exiting the first state or the second state. Ex. 1003, ¶90

Ex. 1006, Fig. 6 (annotated)

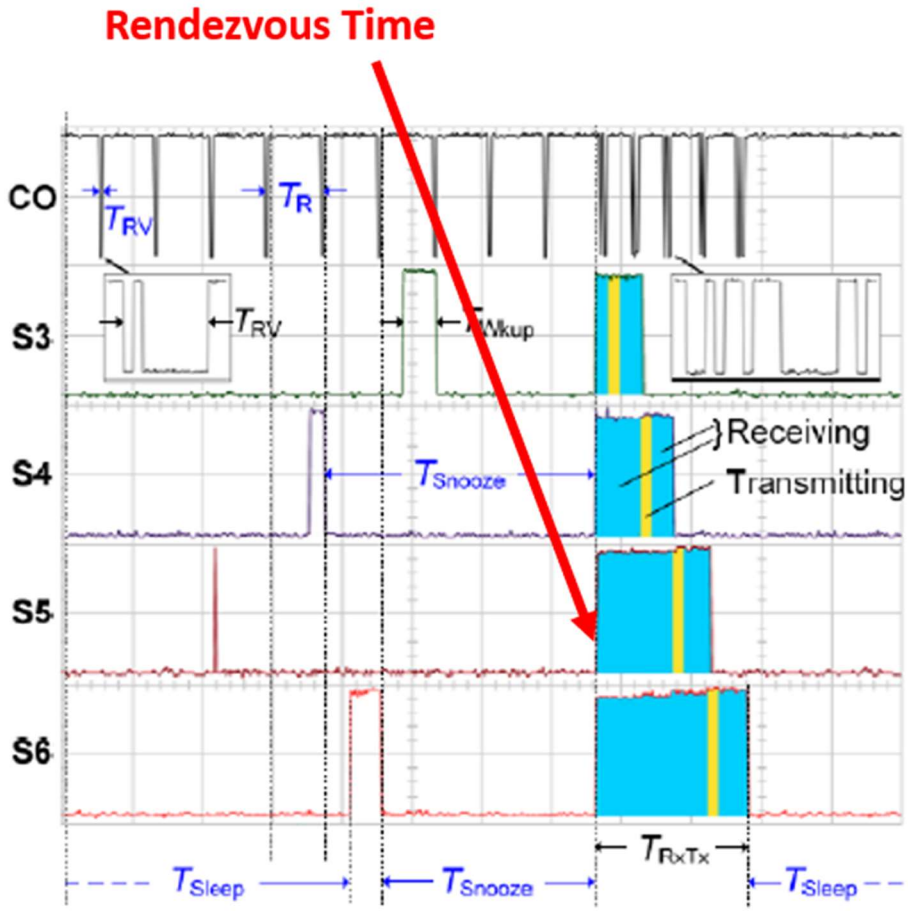

1[F]: receiving, by the receiver, a power management message from an optical line terminal (OLT); and

The term "power management message" appears nowhere in the '892 patent outside of the claims. *See* Ex. 1001; Ex. 1003, ¶91. As such, and in view of the claims, the POSITA would have understood a "power management message" to be a message that is usable to change a power management rule. Ex. 1001, claims 1, 5-6, 9-10, 14; Ex. 1003, ¶91. The '892 patent also doesn't define a power management rule but generally describes example power management rules that

include local and external causes of state transitions. Ex. 1001, 12:31-45; Ex. 1003, ¶91.

G.987.3 teaches a power management message. Ex. 1003, ¶92. For example, an ONU of G.987.3 operate with a "power management rule" that timing parameters control how long the ONU is in a low power state (i.e., Asleep or Listen state) and an aware state (i.e., SleepAware or DozeAware state), transitioning between low power and aware states at the expiration of timers. Ex. 1007, 98, 101-102; Ex. 1003, ¶92. Annotated Figure 16-1 (reproduced below) illustrate options for this power management rule boxed in blue. Ex. 1007, 101; Ex. 1003, ¶92.

Ex. 1007, Figure 16-1 (annotated)

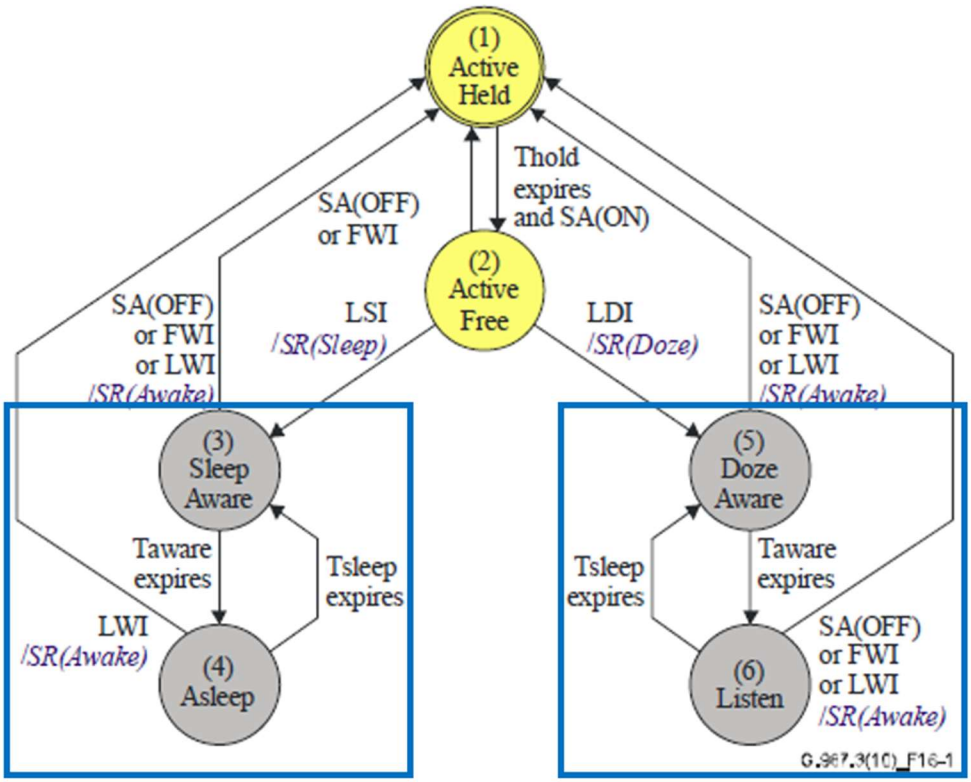

G.987 teaches that PLOAM messages ("power management message[s]") are used to coordinate ONU and OLT state machines to change a power management rule. Ex. 1007, 98, 100, 103, 106; Ex. 1003, ¶93. For example, an ONU may receive a PLOAM event Sleep_Allow(OFF) ("power management message") with which "[t]he OLT withholds consent to exercise a power management mode," thus changing the power management rule from timing parameters controlling how long the ONU can be in a low power or aware state to a power management rule that the ONU may not exercise a low power mode based on the received power management message. Ex. 1003, ¶93. The power

management rule may be changed back to timing parameters with another power management message: the PLOAM event Sleep_Allow(ON), "[t]he OLT grants permission to the ONU to exercise any power management mode and leaves the selection of doze or cyclic sleep mode to the ONU's discretion." Ex. 1007, 100; Ex. 1003, ¶93.

Additionally, the "power management message[s]" are taught by forced wake-up indication transmitted by the OLT which requires "immediate wake-up and transition to a full power state." Ex. 1007, 100-105; Ex. 1003, ¶94. Like Sleep_Allow(ON), the forced wake-up indication changes the power management rule from timing parameters that control how long the ONU can be in a low power or aware to a power management rule that, based on receiving the power management message, the ONU must transition to a full power state.

OMCI messages taught by G.987.3 likewise teach the "power management message[s]" because they configure the ONU's power management attributes and nodes, including Isleep, which controls how long the ONU may remain in an Asleep or Listen. Ex. 1007, 98-99; Ex. 1003, ¶95. An OMCI message configuring these parameters changes the power management rule by changing the amount of time the ONU remains in a low power state. Ex. 1003, ¶95.

G.988 likewise teaches the OMCI messages ("power management messages"). Ex. 1003, ¶96. The dotted line of annotated Figure 6.1-1 of G.988

(reproduced below) shows a path for OMCI signals between an OLT and ONU.

Ex. 1008, 18; Ex. 1003, ¶96.

Ex. 1008, Figure 6.1-1 (annotated)

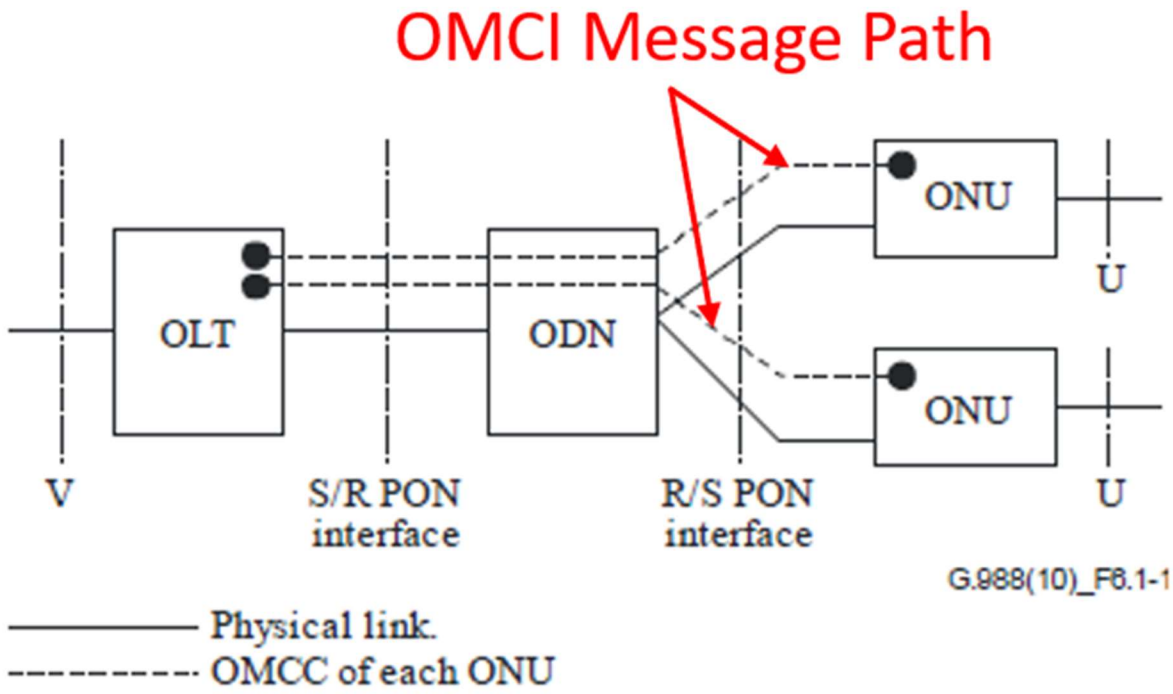

All the above messages in G.987.3 are transmitted from the OLT to the ONU and thus are received by the receiver of the ONU. Ex. 1007, 98-105; Ex. 1003, ¶97.

This is also consistent with Patent Owner's position in its related infringement contentions, which identify PLOAM messages as power management messages used to coordinate ONU and OLT state machines. Ex. 1005, 17-18. For example, the contentions identify PLOAM event Sleep_Allow(ON), stating "[t]he

OLT grants permission to the ONU to exercise watchful sleep management mode." Ex. 1005, 18. The contentions further identify the PLOAM event Sleep_Allow(OFF). Ex. 1005, 18. The contentions further identify OMCI messages as power management messages in G.988. Ex. 1005, 17-18; Ex. 1008, 82. The contentions further identify a forced wake-up indication as a power management message, stating that it requires: "immediate wake-up and transition to the ActiveHeld state" for the ONU. Ex. 1005, 18. Thus, G.987.3 teaches 1[F]. Ex. 1003, ¶98; *see also*, Ex. 1005, 17-18.

Röger likewise teaches 1[F]. Ex. 1003, ¶99. For example, as illustrated by the dashed blue line in annotated Figure 2 (reproduced below), ONUs receive broadcast polling signals ("power management message[s]") from an OLT., which cause the ONUs to immediately transition power states and indicate a rendezvous time at which the ONUs should wake up and communicate with the OLT. Ex. 1006, 6-8; Ex. 1003, ¶99.

Likewise, the power management message is taught by an "ending signal" received by the ONUs from the OLT after the rendezvous time because the "ending signal" causes the ONUs to transition back to sleep mode ("second state"). Ex. 1006, 12; Ex. 1003, ¶100. Thus, Röger likewise teaches 1[F]. Ex. 1003, ¶100; *see also*, Ex. 1005, 17-18.

Ex. 1006, Fig. 2 (annotated)

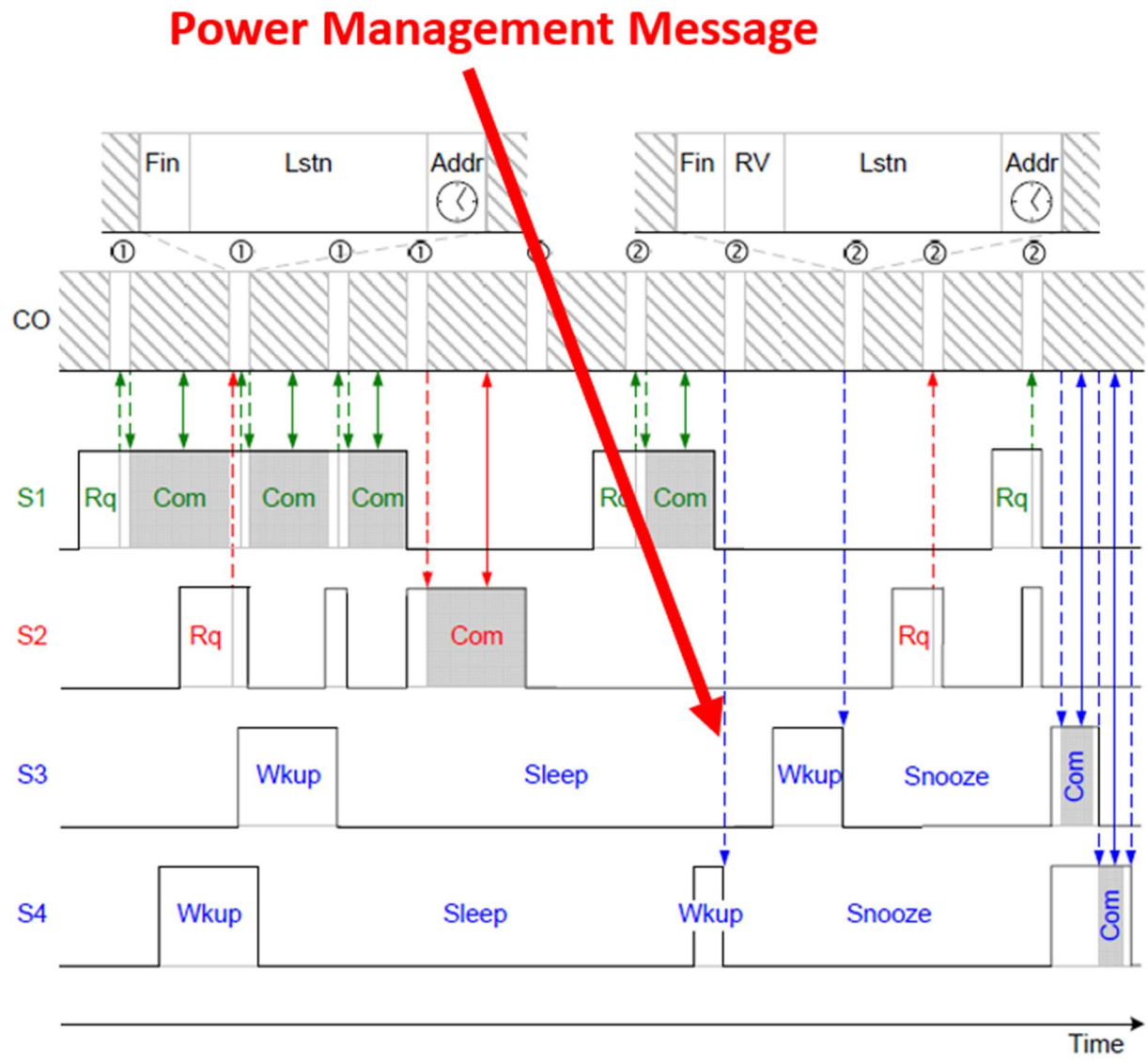

1[G]: changing the power management rule based on the received power management message.

G.987.3 teaches that PLOAM messages ("power management messages") change a "power management rule" by effecting when an ONU can transition states. Ex. 1007, 98-102; Ex. 1003, ¶101. For example, when operating with a power management rule that the ONU alternates between low power and aware states at

the expiration of timers, an ONU may receive a PLOAM event Sleep_Allow(OFF) ("power management message") with which "[t]he OLT withholds consent to exercise a power management mode." Ex. 1007, 100-101; Ex. 1003, ¶101. Thus, the PLOAM event Sleep_Allow(OFF) ("power management message") is changing the power management rule from timing parameters controlling how long the ONU can be in a low power or aware state to a power management rule that, based on receiving the power management message from the OLT, the ONU may not exercise a low power mode. Ex. 1007, 100-101; Ex. 1003, ¶101. The power management rule may be changed back to timing parameters associated with the low power and aware states by another power management message: the PLOAM event Sleep_Allow(ON), "[t]he OLT grants permission to the ONU to exercise any power management mode and leaves the selection of doze or cyclic sleep mode to the ONU's discretion." Ex. 1007, 100-101; Ex. 1003, ¶101. The Sleep_Allow(ON) changes a power management rule back to alternating between low power and aware states based on timing parameters. Ex. 1007, 100-101; Ex. 1003, ¶101.

Additionally, the forced wake-up indication transmitted to the ONU requires "immediate wake-up and transition to a full power state," changing the power management rule from timing parameters that control how long the ONU can be in a low power or aware state to a power management rule that, based on receiving the power management message from the OLT, the ONU must transition to a full power

state. Ex. 1007, 100; Ex. 1003, ¶102. In addition, the OLT of G.987.3 uses OMCI messages to configure the ONUs with minimum or maximum times to spend in different power states, thus, changing the power management rule by changing "timing parameters that control how long the ONU can be in the first or the second mode." Ex. 1007, 98; Ex. 1001, 12:31-45; Ex. 1003, ¶102.

This is also consistent with Patent Owner's position in its related infringement contentions, which identify PLOAM events in G.9807.1 as "effect[ing] a change in the power management rule at the ONU." Ex. 1005, 19. For example, the contentions identify the PLOAM event Sleep_Allow(ON). Ex. 1005, 19. The contentions further identify the OLT's forced wake-up indication to the ONU to require "immediate wake-up and transition to the ActiveHeld state." Ex. 1005, 19. The contentions further map to OMCI messages that alter parameters such as the "Maximum sleep interval", saying that these messages "***effect a change in the power management rule implemented at the ONU***." Ex. 1005, 19. Thus, G.987.3 teaches 1[G]. Ex. 1003, ¶103; *see also*, Ex. 1005, 19.

Patent Owner may argue that, during prosecution of the '892 patent Applicant alleged that Skubic did not teach changing the power management rule by commanding a transition between states. Ex. 1002, 70-71; Ex. 1003, ¶104. However, not only did Examiner reject Applicant's argument, but the argument contradicts what Patent Owner alleges in its related infringement contentions by mapping to the

FWI, which causes "immediate ONU wake-up and its transition to the ActiveHeld state." Ex. 1005, 19; Ex. 1003, ¶104. As such, any argument from Patent Owner regarding its statements regarding Skubic should be disregarded. Ex. 1003, ¶104.

Regardless, Röger teaches 1[G]. Ex. 1003, ¶105. For example, in response to receiving broadcast polling signals an OLT, an ONU of Röger "extracts the time stamp for the next rendezvous with CO, sets a high precision clock to the rendezvous time, and then goes to an energy-saving snooze mode." Ex. 1006, 8; Ex. 1003, ¶105. The polling signals ("power management message[s]") cause a change in the power management rule by causing the ONU to transition to a snooze mode ("second state") until the rendezvous time rather than periodically alternating between a sleep mode and a receive mode. Ex. 1006, 8; Ex. 1003, ¶105. Additionally or alternatively, the "ending signal" changes the power management rule. Röger states that "an ending signal issued by [OLT] sends the [ONUs] back sleeping." Ex. 1006, 12; Ex. 1003, ¶105.Thus, the ending signal ("power management message") causes a change in the "power management rule" by returning the ONU to alternating between a sleep mode and a receive mode. Ex. 1006, 6-8, 12; Ex. 1003, ¶105. Thus, Röger likewise teaches 1[G]. Ex. 1003, ¶105; *see also* Ex. 1005, 19.

Claim 2: The method of claim 1, further comprising: operating the ONU in a third state in which both the transmitter and the receiver are turned on.

G.987.3 teaches that in the ActiveHeld state ("third state"), "[t]he ONU is fully responsive, forwarding downstream traffic and responding to all bandwidth allocations." Ex. 1007, 100. Thus, both the transmitter and receiver of the ONU are turned on in the ActiveHeld state. Ex. 1007, 100; Ex. 1003, ¶106.

The "third" state is also taught by the ActiveFree state of G.987.3, where "[t]he ONU is fully responsive, forwarding downstream traffic and responding to all bandwidth allocations." Ex. 1007, 100; Ex. 1003, ¶107. Likewise, the "third state" is taught by the DozeAware and SleepAware states of G.987.3 because "[b]oth ONU receiver and transmitter remain on." Ex. 1007, 100; Ex. 1003, ¶107.

This is also consistent with Patent Owner's position in its related infringement contentions, which identify the ActiveHeld state in G.9807.1 as the "third state," where "[t]he ONU is fully responsive, forwarding downstream traffic and responding to all bandwidth allocations." Ex. 1005, 21; Ex. 1003, ¶108. The contentions further identify the ActiveFree state of G.9807.1 as the "third state", where "[t]he ONU is fully responsive, forwarding downstream traffic and responding to all bandwidth allocations." Ex. 1005, 21; Ex. 1003, ¶108. Thus, the combination teaches claim 2. Ex. 1003, ¶108; *see also* Ex. 1005, 21.

Likewise, Röger teaches claim 2. Ex. 1003, ¶109. For example, the blue boxes in annotated Table 2 (reproduced below) show that the Subscribers (ONUs) can operate in a transceiving mode with a transceiver on. Ex. 1006, 11; Ex. 1003, ¶109. Röger further states that "the *transceiving mode* comprises both an activated receiver and transmitter," thus teaching the "third state." Ex. 1006, 11; Ex. 1003, ¶109. Thus, the combination likewise teaches claim 2. Ex. 1003, ¶109; *see also* Ex. 1005, 21.

Ex. 1006, Table 2

Table 2. Subscriber operating modes and total DC supply currents I_b for a supply voltage $V_b = 3.6$ V.

Subscriber modes		Attributes	μC current $I_{\mu C}$	Supply current I_b	Total I_b
Sleep	μC low-power modes	Low-Q clock	0.5 μA	I_{Sleep}	0.5 μA
Snooze		High-Q clock	1 μA	I_{Snooze}	1 μA
Receive	μC active mode	Receiver on	3.5 mA	I_{Rx}	6 mA
Transceive		Transceiver on		I_{RxTx}	11 mA

Claim 3: The method of claim 1, wherein the power management rule specifies a first time period for operation in the first state and a second time period for operation in the second state and wherein the transitioning is performed upon expiration of at least one of the first time period and the second time period.

G.987.3 teaches the parameter "Isleep" defined as "the maximum time the ONU spends in its Asleep or Listen states," which are the second state and the first states, respectively. Ex. 1007, 98; Ex. 1003, ¶110. Likewise, G.988 teaches a "Maximum sleep interval" which is also identified as Isleep: "[t]he Isleep attribute specifies the maximum time the ONU spends in its asleep or listen states." Ex. 1008,

82; Ex. 1003, ¶110. Isleep teaches the "first time period" by specifying the maximum time the ONU may spend in its Listen state ("first state"). Ex. 1007, 99. When the local timer is set to its maximum value, the ONU transitions from the Listen state ("first state") at the expiration of Isleep. Ex. 1007, 98; Ex. 1003, ¶110. Isleep teaches the "second time period" by specifying the maximum time the ONU may spend in its Asleep state ("second state"). Ex. 1007, 98; Ex. 1003, ¶110. When the local timer is set to its maximum value, the ONU transitions from the Asleep state ("second state") at the expiration of Isleep. Ex. 1007, 98; Ex. 1003, ¶110. Thus, Isleep teaches both the first time period and the second time period. Ex. 1003, ¶110.

G.987.3 further teaches "Tsleep" which is a local timer with "a value equal to or less than Isleep." Ex. 1007, 98; Ex. 1003, ¶111. The ONU exits Asleep ("second state") or Listen ("first state") upon expiration of Tsleep, as illustrated in annotated Figure 16-1 (reproduced below). Ex. 1007, 98, 101-102; Ex. 1003, ¶111. Tsleep teaches the "first time period" by specifying the time period the ONU spends in its Listen state ("first state"). Ex. 1003, ¶111. Tsleep teaches the "second time period" by specifying the time the ONU spends in its Asleep state ("second state"). Ex. 1007, 98, 101-102; Ex. 1003, ¶111. Thus, since Isleep or Tsleep may control the time period which the ONU spends in the Asleep or Listen states, both timers teach the claimed "first time period" and "second time period." Ex, 1003, ¶111.

Furthermore, the Isleep parameter and the Tsleep parameter are each specified by the "power management rule." Ex. 1003, ¶112. As described in the '892 patent, the power management rule "may be based on the timing parameters that control how long the ONU can be in the first or the second mode." Ex. 1001, 12:31-45; Ex. 1003, ¶112. As discussed above with respect to 1[F]-1[G], the power management rule of G.987.3 is that the ONU alternates between a low power state and an aware state based on timing parameters. *See supra*, §VIII.A, 1[F]-1[G]; Ex. 1003, ¶112. The Isleep and Tsleep parameters "control how long the ONU can be in the first or the second mode", and thus are specified by the power management rule. Ex. 1007, 98; Ex. 1003, ¶112.

Ex. 1007, Fig. 16-1 (annotated)

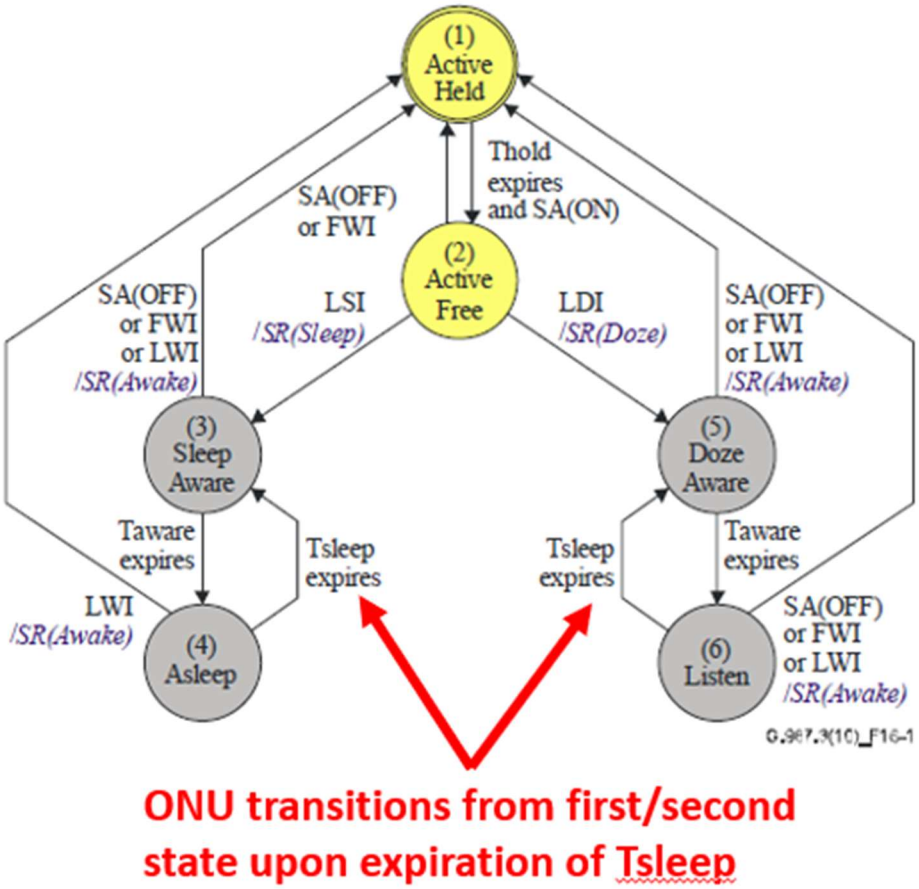

ONU transitions from first/second state upon expiration of Tsleep

This is also consistent with Patent Owner's position in its related infringement contentions, which identifies a maximum sleep interval in a later version of G.988, as "the maximum time the ONU spends in its asleep, listen, or low-power states." Ex. 1005, 22-24; Ex. 1003, ¶113. G.988 identified this maximum sleep interval prior to the priority date of the '892 patent as the Isleep parameter discussed above. Ex. 1008, 82; Ex. 1003, ¶113. Thus, the combination teaches claim 3. Ex. 1003, ¶113; *see also* Ex. 1005, 22-24.

Likewise, and as discussed further above with respect to 1[D], Röger teaches a power management rule that ONUs remain in sleep mode ("second state") until wake-up intervals in which they activate receiver circuitry (transitioning to the "first state"). Ex. 1006, 6-8, 10-13; Ex. 1003, ¶114; *see supra*, §VIII.A, 1[D]. The time which the ONU remains in sleep mode until the wake-up interval teaches the "second time period." Ex. 1006, 7; Ex. 1003, ¶114. The ONU then transitions directly into a receive mode ("first state") for a time "T_{Wkup}" ("first time period"). Ex. 1006, 12; Ex. 1003, ¶114. If the ONU does not receive a rendezvous signal, it "goes back to sleeping" ("second state"). Ex. 1006, 8; Ex. 1003, ¶114. As such, the combination teaches claim 3. Ex. 1003, ¶114.

If the ONU receives polling from the OLT ("power management messages"), the power management rule is changed by altering the "second time period." Ex. 1003, ¶115. Röger discloses that the ONU enters a snooze mode ("second state"), the ONU maintains "a precise quartz clock," and it awakes "exactly at a rendezvous time" for communication with the OLT. Ex. 1006, 8; Ex. 1003, ¶115. Thus, the "second time period" when changed by a "power management message" is maintained by the quartz clock and is the time until the rendezvous time at which the ONU transitions from the second state back to the receive mode ("first state"). Ex. 1006, 11-13; Ex. 1003, ¶115. Thus, Röger discloses the power management rule specifying a first time period for operation in the first state and a second time period

for operation in the second state, wherein the transitioning is performed upon expiration of at least one of the first time period and the second time period. Ex. 1003, ¶115.

Claim 4: The method of claim 1, further comprising: transmitting, to an optical line terminal, a message indicative of the transitioning between the first state and the second state.

Claim 4 seems to contradict 1[D] since the transmitter would be turned on to transmit the message indicative of transitioning. Ex. 1003, ¶116. Regardless, the combination teaches Claim 4. Ex. 1003, ¶116.

G.987.3 teaches that the ONU transmits "Sleep_Request" (used interchangeably with "SR" and "SleepRequest") messages to "signal the ONU's intention to change power saving modes." Ex. 1007, 52; Ex. 1003, ¶117. For example, using a "SleepRequest(Doze)" message, "[t]he ONU informs the OLT of its intent to exercise the doze power management mode." Ex. 1007, 103; Ex. 1003, ¶117. Using a "SleepRequest(Sleep)" message, "[t]he ONU informs the OLT of its intent to exercise the cyclic sleep power management mode." Ex. 1007, 103; Ex. 1003, ¶117. Using a "SleepRequest(Awake)" message, "[t]he ONU informs the OLT of its intent to remain at full power." Ex. 1007, 103; Ex. 1003, ¶117. Each of these messages are transmitted by the ONU upon entering and exiting the Asleep state ("second state") and Listen state ("first state"), as boxed in blue in annotated Figure 16-1 (reproduced below). Ex. 1007, 101; Ex. 1003, ¶117.

As explained further with respect to 1[D], the ONU's indirect transition performed when transmitting these messages would have been modified to the direct transition taught by Röger. Ex. 1003, ¶118; *see supra* §VIII.A, 1[D]. Thus, the combination teaches claim 4. Ex. 1003, ¶118.

Ex. 1007, Fig. 16-1 (annotated)

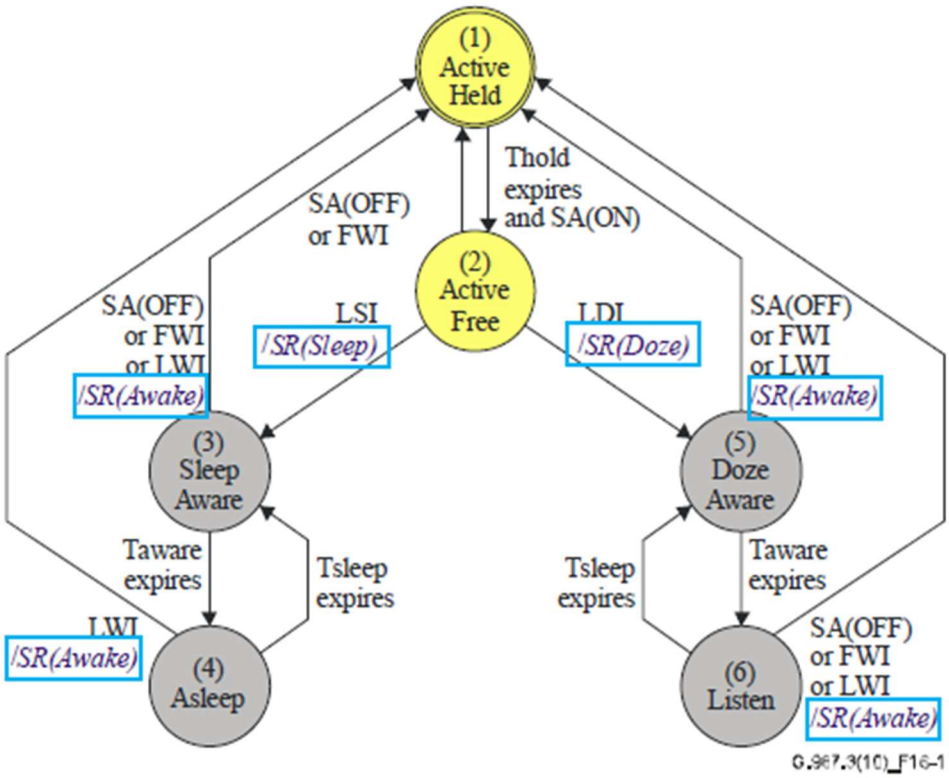

Claim 5: The method of claim 1, further comprising: performing the transitioning responsive to the received power management message and a local decision to change an operational state.

G.987.3 in view of Röger renders obvious claim 5. Ex. 1003, ¶119. As discussed above with respect to claim elements 1[F]-1[G], G.987.3 teaches that by using the PLOAM event Sleep_Allow(ON), "[t]he OLT grants permission to the

ONU to exercise any power management mode and leaves the selection of doze or cyclic sleep mode to the ONU's discretion." Ex. 1007, 100; Ex. 1003, ¶119; *see supra*, §VIII.A, 1[F]-1[G]. The ONU performs a transition responsive to the PLOAM message ("received power management message") and due to a local decision to change an operational state, (since the "selection of doze or cyclic sleep mode" is left to the ONU's local discretion). Ex. 1007, 100; Ex. 1003, ¶119.

Additionally, and as discussed further with respect to claim elements 1[F]-1[G], state transitions also may occur due to additional "power management message[s]" such as the PLOAM event Sleep_Allow(OFF) or a forced wake-up indication. Ex. 1007, 100; Ex. 1003, ¶120; *see supra*, §VIII.A, claim 3. Furthermore, as discussed with respect to claim 3, state transitions may take place at the end of a local timer based on a maximum allowed time in a power state configured by the OLT via OMCI message ("power management message"). Ex. 1007, 98, 101-102; Ex. 1003, ¶120; *see supra*, §VIII.A, claim 3.

Further, the ONU of G.987.3 may transition due to other "local decisions to change operational states." Ex. 1007, 101; Ex. 1003, ¶121. A local sleep indication (LSI) occurs when "[t]he ONU has no local reason to remain at full power and is willing to exercise the cyclic sleep power management mode." Ex. 1007, 101; Ex. 1003, ¶121. A local doze indication (LDI) occurs when "[t]he ONU has no local reason to remain at full power and is willing to exercise the doze power

management mode." Ex. 1007, 101; Ex. 1003, ¶121. A local wake-up indication (LWI) occurs when "[a] local stimulus prevents the ONU from exercising any power management mode" (i.e., transitioning from a second state to a first state). Ex. 1007, 101; Ex. 1003, ¶121. As explained further with respect to 1[D], the ONU's indirect transition would have been modified to the direct transition taught by Röger. Ex. 1003, ¶121; *see supra*, §VIII.A, 1[D].

Petitioner's positions herein are consistent with Patent Owner's position in its related infringement contentions, which identify, in addition to the power management messages discussed with respect to 1[F]-1[G], a "[l]ocal sleep indication (LSI)" where "[t]he ONU has no local reason to remain at full power and is willing to exercise the watchful cyclic sleep power management mode." Ex. 1005, 25; Ex. 1003, ¶122. The contentions further identify a "[l]ocal wake-up indication (LWI)" where "[a] local stimulus prevents the ONU from exercising any power management mode." Ex. 1005, 25; Ex. 1003, ¶122. The contentions further point to the ONU receiving a "Sleep_Allow(ON) PLOAM message from the OLT allowing it to enter into the low power state" and using "internal local timers … to govern the low power state to ensure the actual duration of the lower power state does not exceed" a maximum time configured by the OLT. Ex. 1005, 25; Ex. 1003, ¶122. Thus, the combination renders obvious claim 5. Ex. 1003, ¶122; *see also* Ex. 1005, 25.

Röger likewise teaches ONUs in a sleep mode ("second state") that periodically transition to a receive state ("first state") during wake-up intervals "***initiated autonomously by the subscribers***" (ONUs). Ex. 1006, 7; Ex. 1003, ¶123. Furthermore, when the ONU receives an ending signal ("power management message"), the subscribers are sent back into a sleep mode ("second state"), where they transition back and forth with a receive state ("first state"). Ex. 1006, 7, 12; Ex. 1003, ¶123. Therefore, the direct transitions between the first state and second state are also performed responsive to receiving the ending signal ("power management message"). Ex. 1003, ¶123. Thus, the combination likewise teaches claim 5. Ex. 1003, ¶123; *see also* Ex. 1005, 25.

Claim 14[A]: A passive optical network (PON) communications system, comprising:

G.987.3 teaches claim 14[A] for at least the reasons described with respect to 1[A]. Ex. 1003, ¶124; *see supra*, §VIII.A, 1[A].

Röger likewise teaches claim 14[A] for at least the reasons described with respect to 1[A]. Ex. 1003, ¶125; *see supra*, §VIII.A, 1[A].

14[B]: an optical network unit (ONU) operable in a first low power mode in which the ONU is able to receive but not transmit and a second low power mode in which the ONU is not able to either receive or transmit, wherein the ONU is configured to transition from the first low power mode to the second low power mode and to transition from the second low power mode to the first low power mode based on a power management rule, and wherein the ONU changes a power management rule based on a received power management message;

G.987.3 teaches 14[B] for at least the reasons discussed with respect to claim elements 1[B]-1[C] and 1[F]-1[G]. Ex. 1003, ¶126; *see supra* §VIII.A, 1[B]-1[C], 1[F]-1[G].

Additionally, and in view of the breadth of 14[B] and the lack of a requirement of a direct transition, G.987.3 teaches this limitation because the ONU can transition between the first low power mode and the second low power mode by going through the ActiveHeld, ActiveFree, and SleepAware or DozeAware states, as shown in red in annotated Figure 16-1 below. Ex. 1007, 101; Ex. 1003, ¶127.

Ex. 1007, Fig. 16-1

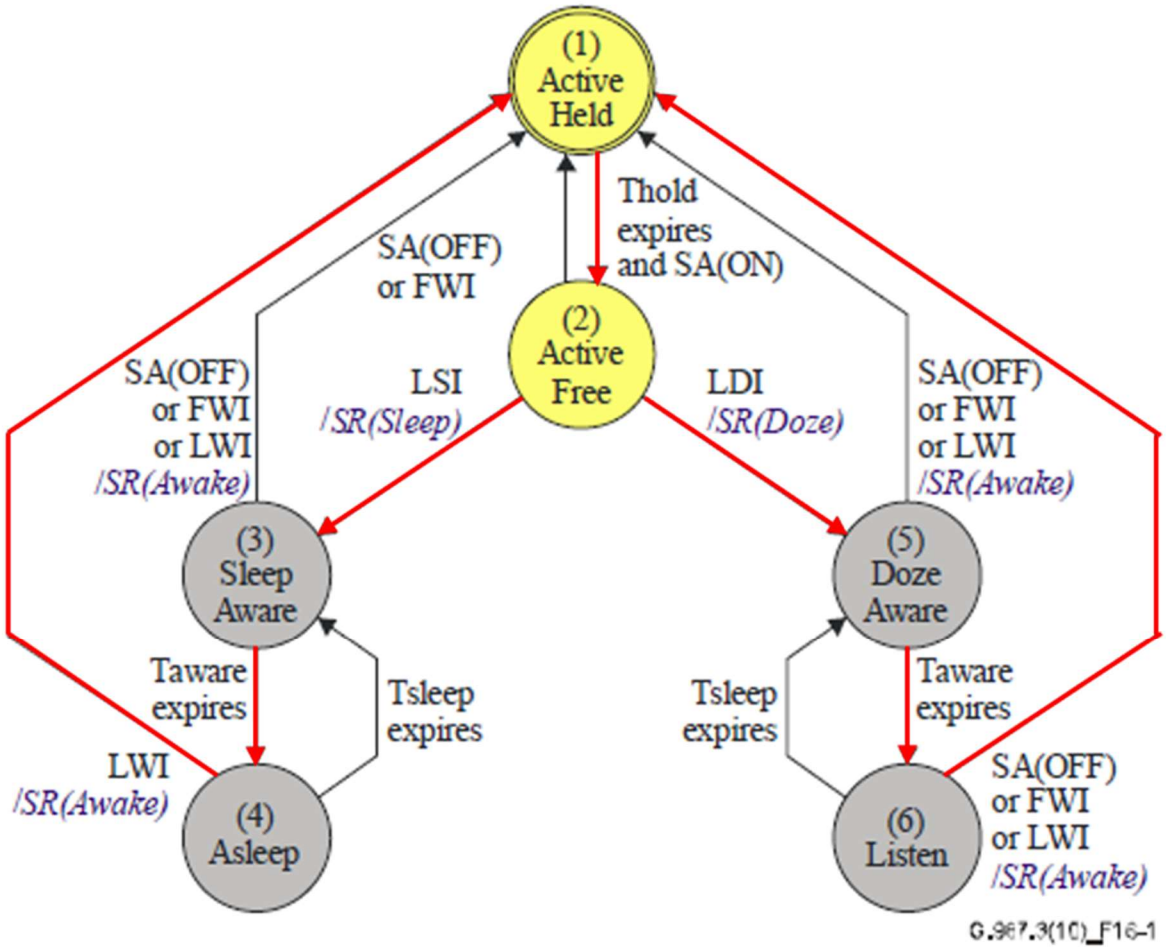

Assuming *in arguendo* that Patent Owner argues that 14[B] requires a direct transition between the low power states, G.987.3 in view of Röger renders obvious 14[B] for at least the reasons discussed with respect to claim elements 1[B]-1[D] and 1[F]-1[G]. Ex. 1003, ¶128; *see supra* §VIII.A, 1[B]-1[D], 1[F]-1[G]. Indeed, Röger teaches direct transitions between the receive mode ("first low power state") and the second low power state (sleep mode). Ex. 1006, 6-8, 10-13; Ex. 1003, ¶128.

14[C]: an optical line terminal (OLT) communicably coupled to the ONU, the OLT configured to transmit a control message to the ONU to control at least one aspect of transition of the ONU between the first low power mode and the second low power mode; and

G.987.3 teaches 14[C] for at least the reasons discussed with respect to claim elements 1[F]-1[G] and 14[C]. Ex. 1003, ¶129; *see supra* §VIII.A, 1[F]-1[G], 14[B].

Ex. 1007, Fig. 16-1

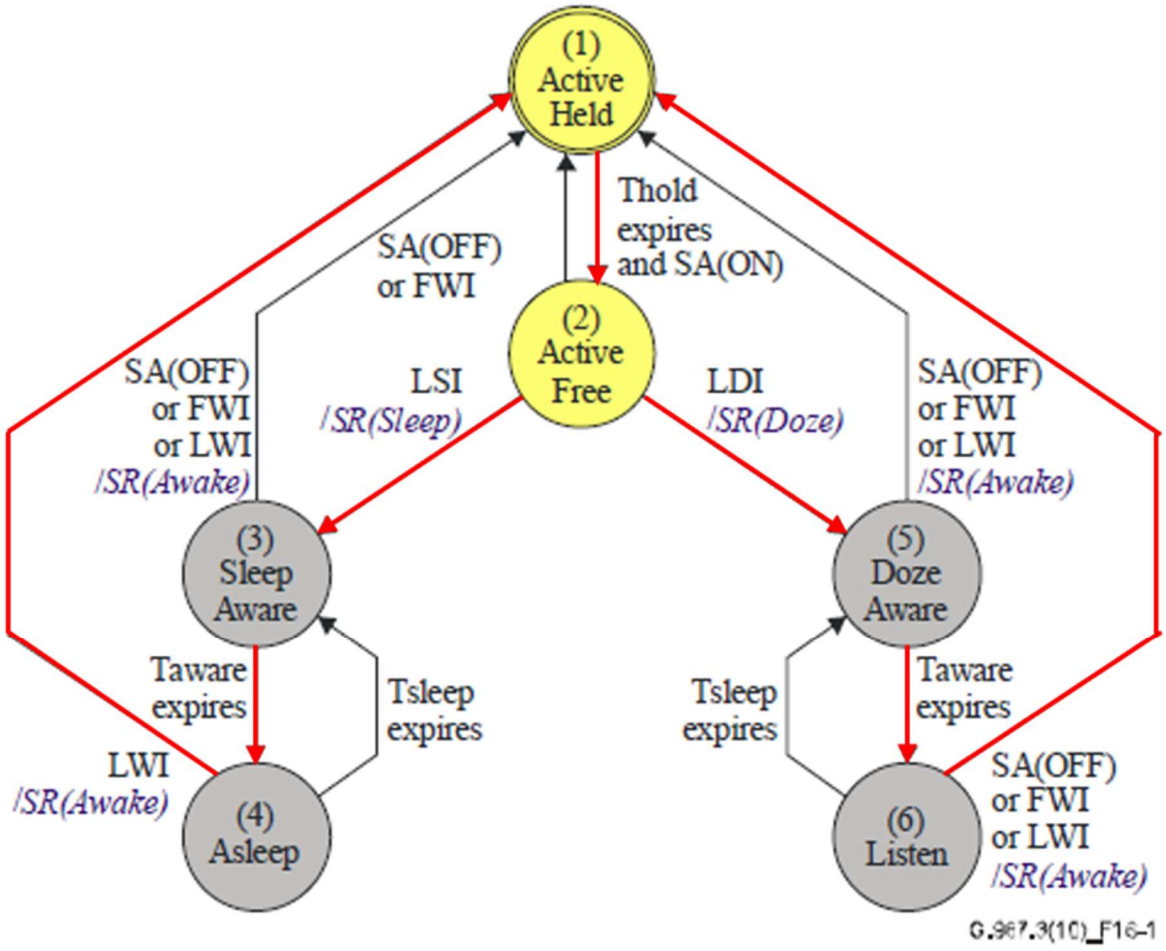

The "control message" of the '892 patent includes the "power management message" described above. Ex. 1003, ¶130; *see supra*, §VIII.A, 1[F]-1[G].

Regarding the "control message," the specification of '892 patent states that a power management rule may include "responding incoming control messages from the OLT that specify entering or exiting the first and the second states." Ex. 1003, ¶130. As such, a power management message changing the power management rule by causing an ONU to change states falls within the scope of a control message. Ex. 1003, ¶130. Indeed, changing a power management rule (which generally include local and external causes of state transitions) would also "control at least one aspect of transition." Ex. 1003, ¶130; *see supra* VIII.A, 1[D].

Specifically, the PLOAM messages transmitted by the OLT to the ONU teach the "control messages" because they allow or restrict the ONU from operating in a "first low power mode" or "second low power mode," thus controlling "at least one aspect of the transition." Ex. 1007, 100; Ex. 1003, ¶131.

Further, FWIs transmitted by the OLT teach the "control messages" because they cause the ONU to transition to a full power state, which is "at least one aspect of the transition" because it is the first step of a transition between the "first low power state" and the "second low power state." Ex. 1007, 100-102; Ex. 1003, ¶132.

Finally, the "control messages" are taught by OMCI messages by which the OLT sends the ONU parameters including Isleep: "the maximum time the ONU spends" in its first or second low power mode. Ex. 1007, 98; Ex. 1003, ¶133. The OLT controls "at least one aspect of a transition" from the first or second low power

mode by using the OMCI message to specify the maximum time until the ONU must transition from these modes. Ex. 1007, 98; Ex. 1003, ¶133.

Assuming *in arguendo* that Patent Owner argues that 14[C] requires a direct transition between the first and second low power modes, a POSITA would have known that these control messages would be applicable to direct transitions between the first and second low power modes in G.987.3 modified by Röger. Ex. 1006, 6-8, 20-23; Ex. 1003, ¶134.

Röger likewise teaches 14[C] for at least the reasons discussed with respect to claim elements 1[F]-1[G] and 5. Ex. 1003, ¶135; *see supra*, §VIII.A, 1[F]-1[G], claim 5. For example, when the ONU receives, from the OLT, an ending signal ("control message"), the subscribers enter a sleep mode ("second low power mode"), where they transition back and forth with a receive state ("first low power mode"). Therefore, the direct transitions between the first and second low power mode are controlled at least in one aspect by the ending signal ("control message") which causes the ONU to alternate between the sleep mode ("second state") and the receive mode ("first state"). Ex. 1006, 7, 12; Ex. 1003, ¶135. Thus, the combination teaches 14[C]. Ex. 1003, ¶135. Furthermore, as illustrated in annotated Figure 2 (reproduced below), the dashed blue line illustrates a polling signal (which also teaches the "control message") transmitted by the OLT causes the ONU to transition from a receive mode ("first low power mode") where a receiver is on and a transmitter is

off to a snooze mode (which additionally discloses the "second low power mode") in which both the receiver and transmitter are off. Ex. 1006, 7. Ex. 1003, ¶135. Thus, Röger teaches 14[C]. Ex. 1003, ¶135.

Ex. 1006, Fig. 2 (annotated)

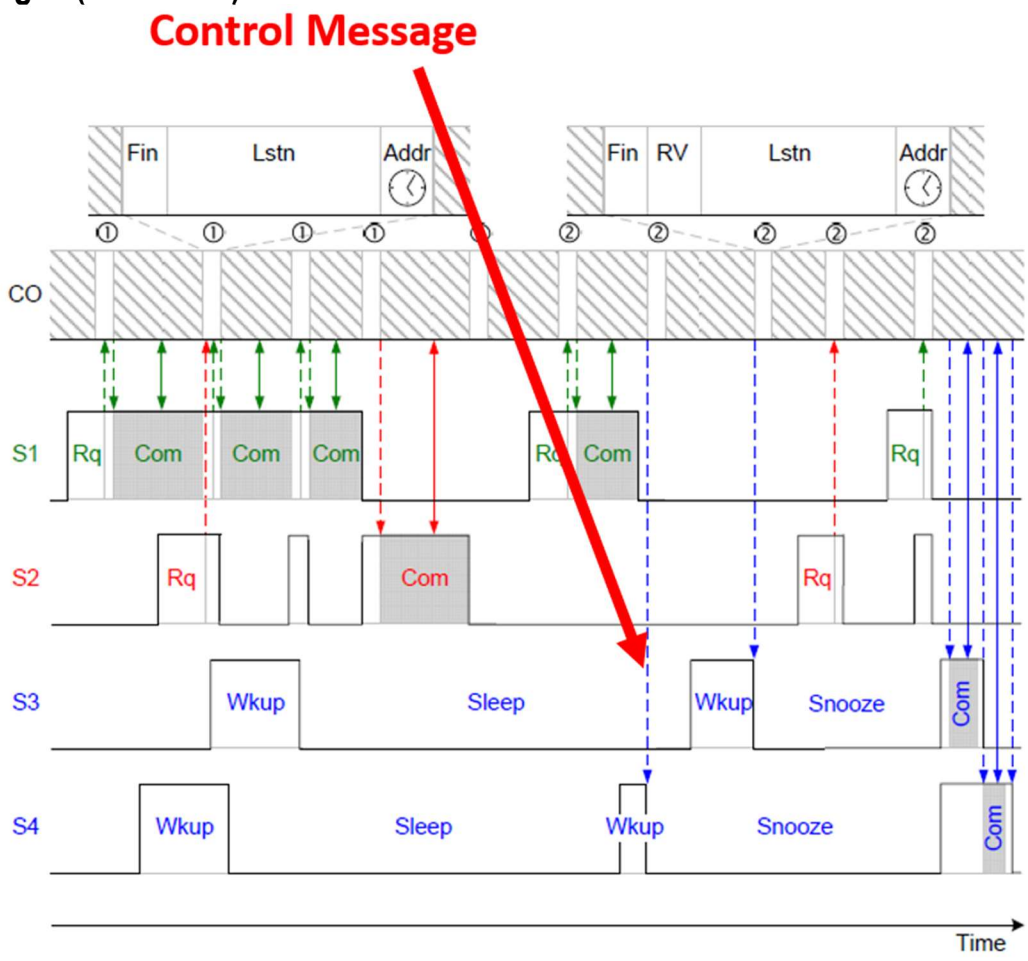

14[D]: the ONU configured to ensure that the ONU is fully powered up, synchronized, and capable of responding to both upstream and downstream traffic and control before exiting the first low power mode or the second low power mode.

G.987.3 teaches claim 14[D] for at least the reasons described with respect to claim 1[E]. Ex. 1003, ¶136; *see supra*, §VIII.A, 1[E].

Claim 15: The system as in claim 14, wherein: the OLT is configured to transmit the control message that includes the power management rule that specifies a first time period for operation in the first low power state and a second time period for operation in the second low power state and to control the ONU to transition from the first low power state to the second low power state upon expiration of at least one of the first time period and the second time period.

G.987.3 in view of Röger further in view of G.988 renders obvious claim 15 for at least the reasons discussed with respect to claims 1[F]-1[G], 3, and 14[C]. Ex. 1003, ¶137; *see supra*, §VIII.A, 1[F]-1[G], claim 3, 14[C].

The OMCI messages ("control message[s]") from the OLT define Isleep ("the maximum time the ONU spends in its Asleep or Listen states") and Iaware ("the minimum time the ONU spends in its Aware state"). Ex. 1007, 100; Ex. 1003, ¶138. Likewise, G.988 identifies Isleep as the "Maximum sleep interval." Ex. 1008, 82; Ex. 1003, ¶138. As discussed further above with respect to 1[F]-1[G], the "power management rule" for the ONU is switching back and forth between low power and aware states. *See supra*, §VIII.A, 1[F]-1[G]; Ex. 1003, ¶138. Since Isleep and Iaware control how much time the ONU spends in these states, the OMCI message defines

the "power management rule." Ex. 1007, 98; Ex. 1003, ¶138. In addition, the maximum time the ONU spends in the Asleep and Listen states teaches the "second time period" and the "first time period" respectively. Ex. 1007, 98; Ex. 1003, ¶138. Therefore, "Isleep" teaches both the "first time period" and "second time period." Ex. 1003, ¶138. The OLT controls the transition from the first or second low power state by defining the maximum time prior to the transition. Ex. 1007, 98; Ex. 1003, ¶138.

A POSITA would have known that timing parameters configured by the control messages would have also been applicable to all transitions to include direct transitions from the "first low power state" to the "second low power state" in G.987 modified by Röger. Ex. 1006, 6-8, 10-13; Ex. 1003, ¶139. Thus, the combination renders obvious claim 15. Ex. 1003, ¶139.

B. Ground 2: G.987.3 in View of Röger Further in View of G.988 Further in View of Ghazisaidi Renders Obvious Claims 10-13 of the '892 Patent.

Motivation to Combine

A POSITA would have been motivated to combine G.987.3, G.988, and Röger with Ghazasaidi. Ex. 1003, ¶140. All of G.987.3, G.988, Röger, and Ghazasaidi are directed towards PONs that include an OLT in communication with a number of ONUs. Ex. 1006, 2, 5; Ex. 1007, 1, 3, 10, 97-106; Ex. 1008, 3, 12; Ex. 1009, Abstract; Ex. 1003, ¶140. Moreover, Ghazasaidi addresses a common problem

with the other references- energy efficiency. Ex. 1009, [0001], [0005]; Ex. 1003, ¶140. Ghazasaidi states "[m]any efforts have been devoted to reduce the energy consumption of wired and wireless access networks." Ex. 1009, [0001]; Ex. 1003, ¶140. A POSITA in possession of G.987.3, G.988, and Röger would have been motivated to look to the equivalent OLT and ONUs of Ghazasaidi to inform ways to reduce energy consumption of a PON. Ex. 1003, ¶140.

In addition, the POSITA would have been motivated to modify ONUs and OLTs in G.987.3, G.988, and Röger to include the processor and memory of Ghazasaidi's ONUs and OLTs so that they would be equipped to perform functionality useful in a PON. Ex. 1009, [0052]; Ex. 1003, ¶141. Indeed, a POSITA would have looked to disclosures like Ghazasaidi when implementing ONUs and OLTs for reducing power consumption. Ex. 1003, ¶141. A POSITA would have had an expectation of success since the ONUs and OLTs of Ghazasaidi would have been standardized based on ITU-T recommendations. Ex. 1003, ¶141. Thus, a POSITA would have known that a simple substitution of Ghazasaidi's processor and memory in the ONUs and OLTs of G.987.3, G.988, and Röger would have yielded predictable results and allowed such OLTs and ONUs to function in the PON. Ex. 1003, ¶141.

Claim 10[A]: An optical communication apparatus, comprising:

G.987.3 teaches claim 10[A]. Ex. 1003, ¶142. G.987.3 teaches an ONU in communication with an OLT. Ex. 1007, 10, 97-106; Ex. 1003, ¶142.

Röger teaches claim 10[A]. Ex. 1003, ¶143. For example, Röger teaches ONUs in communication with OLTs. Ex. 1006, 5; Ex. 1003, ¶143.

Ghazisaidi likewise teaches 10[A]. Ex. 1003, ¶144. For example, Ghazisaidi teaches ONUs in communication with an OLT in a PON. Ex. 1009, [0003]; Ex. 1003, ¶144.

10[B]: a memory that stores processor-executable instructions; and

A POSITA would have understood that ONUs of G.987.3, G.988, and Röger would have had memories to store instructions for communication in the PON. Regardless, Ghazisaidi teaches 10[B]. Ex. 1003, ¶145. Specifically, Ghazisaidi teaches that the ONU may include a memory "used to store various instructions for the processor." Ex. 1009, [0052]. A POSITA would have known it to be obvious to use the memory of Ghazisaidi to store instructions for the ONU in G.987.3, G.988, and Röger as the Ghazisaidi's memory stores instructions for an equivalent ONU. Ex. 1003, ¶145. Thus, Ghazisaidi teaches 10[B]. Ex. 1003, ¶145.

10[C]: a processor that uses the stored instructions to implement a method, comprising operating an optical network unit (ONU) in a first state in which a transmitter of the ONU is turned off and a receiver of the ONU is turned on; and operating the ONU in a second state in which both the transmitter and the receiver are turned off; and

G.987.3 in view of Ghazisaidi renders obvious claim 10[C]. Ex. 1003, ¶146. A POSITA would have understood that ONUs of G.987.3, G.988, and Röger would have had processors to implement their functionality. Ex. 1003, ¶146. Regardless, the ONU of Ghazisaidi includes "a processor" that uses instructions stored by a memory. Ex. 1009, [0052]; Ex. 1003, ¶146. The processor of Ghazisaidi may be used for data communication via the PON. Ex. 1009, [0052]; Ex. 1003, ¶146. A POSITA would have known it to be obvious to use the processor of Ghazisaidi to implement the functionality performed by the ONU in G.987.3, as the Ghazisaidi's processor controls the functionality of an equivalent ONU. Ex. 1009, [0052]; Ex. 1003, ¶146. The processor would be operable to implement the method of claim 10[C] for the reasons discussed with respect to claim elements 1[B]-1[C]. Ex. 1003, ¶143; *see supra*, §VIII.A, 1[B]-1[C]. Thus, the combination renders obvious 10[C]. Ex. 1003, ¶146.

Röger in view of Ghazisaidi renders obvious 10[C] for at least the reasons discussed with respect to claim elements 1[B]-1[C]. Ex. 1003, ¶147; *see supra*, §VIII.A, 1[B]-1[C].

10[D]: wherein the processor includes means for transitioning the ONU directly from the first state to the second state and means for transitioning the ONU directly from the second state to the first state, based on a power management rule;

The processor of Ghazisaidi, as combined in this ground with G.987.3, G.988, and Röger, includes means for performing this functionality, as described above in 1[D]. Ex. 1009, [0052]; Ex. 1003, ¶148. Thus, the combination renders obvious 10[D]. Ex. 1003, ¶148.

10[E]: wherein the processor uses stored instructions to ensure the ONU is fully powered up, synchronized, and capable of responding to both upstream and downstream traffic and control before exiting the first state or the second state; and

The processor of Ghazisaidi, as combined in this ground with G.987.3, G.988, and Röger, includes means for using stored instructions to perform this functionality, as described in 1[E]. Ex. 1003, ¶149; *see supra*, §VIII.A, 1[E]. Thus, the combination renders obvious 10[E]. Ex. 1003, ¶149.

10[F]: wherein the processor further uses the stored instructions to implement the method by receiving, by the receiver, a power management message from an optical line terminal (OLT) and changing the power management rule based on the received power management message.

The processor of Ghazisaidi, as combined in this ground with G.987.3, G.988, and Röger, includes means for using stored instructions to perform this functionality as described in 1[F]-1[G]. Ex. 1003, ¶150; *see supra*, §VIII.A, 1[F]-1[G]. Thus, the combination renders obvious 10[F]. Ex. 1003, ¶150.

Claim 11: The apparatus as in claim 10, wherein the power management rule specifies a first time period for operation in the first state and a second time period for operation in the second state and wherein the transitioning is performed upon expiration of at least one of the first time period and the second time period.

The combination renders obvious claim 11 for at least the reasons discussed with respect to claim 3. Ex. 1003, ¶¶151-152; *see supra*, §VIII.A, claim 3.

Claim 12[A]: An optical line terminal (OLT) for operation in a passive optical network (PON), the optical line terminal comprising:

G.987.3 teaches an '"OLT" which is part of a PON. Ex. 1007, 1, 3, 10, 97-106; Ex. 1003, ¶153.

Röger likewise teaches OLTs in a PON. Ex. 1003, ¶154; Ex. 1006, 2, 5.

Ghazisaidi likewise teaches an OLT in a PON. Ex. 1009, [0003]; Ex. 1003, ¶155. Thus, G.987.3, Röger, and Ghazisaidi each teach 12[A]. Ex. 1003, ¶155.

12[B]: a processor configured to generate messages for controlling a transition of an optical network unit from a first low power state in which a receiver of the optical network unit is turned on but a transmitter of the optical network unit is turned off to a second low power state in which both the receiver and the transmitter of the optical network unit are turned off;

12[B] does not require the transition between the first low power mode and the second low power mode to be "direct." Ex. 1003, ¶156. As such, the ONU can transition between the first and second low power mode by going through ActiveHeld and ActiveFree modes, as shown in Figure 16-1 below. Ex. 1007, 101; Ex. 1003, ¶156.

Ex. 1007, Fig. 16-1

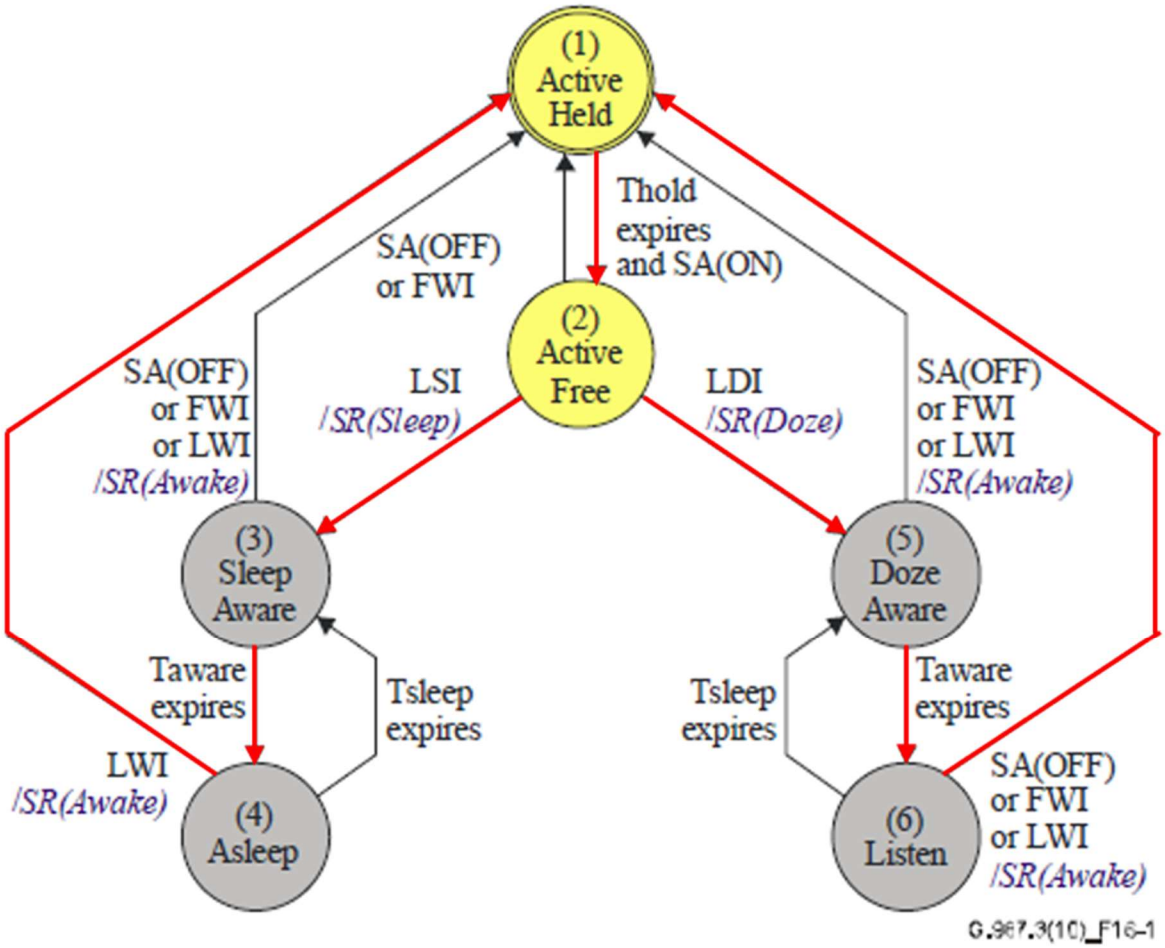

The OLT of Ghazisaidi includes "a processor" that uses instructions stored by a memory and is used for data communication via the PON. Ex. 1009, [0052]; Ex. 1003, ¶157. A POSITA would have known it to be obvious to use the processor of Ghazisaidi to implement the functionality performed by the equivalent OLT in G.987.3 or Röger. Ex. 1003, ¶157. For example, the OLT of G.987.3 generates PLOAM events, bit-indication events, and OMCI messages ("messages") which control transition of an ONU between states, as described with respect to claim

elements 1[F]-1[G]. Ex. 1007, 98-102; Ex. 1003, ¶158; *see supra*, §VIII.A, 1[F]-1[G].

Additionally, assuming *in arguendo* that Patent Owner argues that 12[B] requires a direct transition between the first low power state and the second low power state, G.987.3 in view of Röger further in view of Ghazisaidi renders obvious 12[B] as Röger teaches these direct transitions as described in 1[D]. Ex. 1006, 6-8; Ex. 1003, ¶158; *see supra*, VIII.A, 1[D]. Röger further teaches that the OLT generates polling signals ("messages") that control the transition of an ONU from a receive state ("first low power state") in which the ONU's receiver is on and its transmitter is off to a snooze state ("second low power state") in which the ONU's receiver and transmitter are off, as described with respect to claim elements 1[F]-1[G]. Ex. 1006, 6-8, 12-13; *see supra*, §VIII.A, 1[F]-1[G].

12[C]: a transmitter configured to transmit the generated messages to the optical network unit;

The OLT of G.987.3 includes a transmitter to transmit the generated messages described with respect to claim element 1[F]. Ex. 1007, 98-102; Ex. 1003, ¶160; *see supra*, VIII.A, 1[F].

The OLT of Röger includes a "[o]ptical transmitters" which transmit generated message to the ONU as described with respect to claim element 1[F]. Ex.

1006, 6-8, 12-13; Ex. 1003, ¶161; *see supra*, VIII.A, 1[F]. Thus, the combination renders obvious 12[C]. Ex. 1003, ¶161.

12[D]: wherein the generated messages comprises a periodic consent message to allow the optical network unit to remain in either the first low power state or the second low power state.

G.987.3 in view of Ghazisaidi renders obvious 12[D]. Ex. 1003, ¶162. For example, PLOAM messages are used to consent to the ONU operating in a doze mode including a Listen state ("first low power state") or a cyclic sleep mode including an Asleep state ("second low power state"). Ex. 1007, 100; Ex. 1003, ¶162. Using the PLOAM event Sleep_Allow(ON), "[t]he OLT grants permission to the ONU to exercise any power management mode and leaves the selection of doze or cyclic sleep mode to the ONU's discretion." Ex. 1007, 100; Ex. 1003, ¶162. Like LPM-Allow in the '892 Patent, Sleep_Allow(ON) shifts the responsibility to the ONU to determine whether to remain in a low power state (i.e., gives consent). Ex. 1001, Table 1; Ex. 1003, ¶162.

"Periodic consent message" is not found in the specification of the '892 Patent. *See* Ex. 1001; Ex. 1003, ¶163. At best, "periodic consent message" refers to an LPM-Allow message, which, like Sleep_Allow(ON), is transmitted upon an OLT state transition and gives permission to the ONU to transition into a low power mode. Ex. 1001, Tables 1, 6; Ex. 1007, 100, 103; Ex. 1003, ¶163. To the extent Patent Owner argues that this message must be transmitted periodically, such functionality

is the same in G.987.3 as the OLT may send Sleep_Allow PLOAM messages "***at any time***," (e.g., periodically) even if a sleeping ONU would not receive the transmission. Ex. 1007, 106; Ex. 1003, ¶163. A POSITA would have known that periodically transmitting these messages would fall within "at any time" and would be beneficial by regularly keeping the ONU informed of its permissions. Ex. 1003, ¶163.

> ***Claim 13: The optical line terminal as in claim 12, wherein the processor includes means for specifying a first time period for operation in the first low power state and a second time period for operation in the second low power state and wherein the transition of the optical network unit from the first low power state to the second low power state is controlled to occur upon expiration of at least one of the first time period and the second time period.***

The combination renders obvious claim 13 for at least the reasons described in 12[B], 1[F]-1[G], and claim 3. Ex. 1003, ¶164-165; *see supra*, §VIII.A, 1[F]-1[G], claim 3, §VIII.B, 12[B].

IX. DISCRETIONARY ISSUES

A. §325(d)

Institution should not be denied under §325(d). Under *Advanced Bionics*, the Board uses a two-part framework in determining whether to exercise its discretion under §325(d), specifically:

> (1) whether the same or substantially the same art previously was presented to the Office or whether the same or substantially the same arguments previously were presented to the Office; and

> (2) if either condition of [the] first part of the framework is satisfied, whether the petitioner has demonstrated that the Office erred in a manner material to the patentability of challenged claims.

Advanced Bionics, LLC v. MED-EL Elektromedizinische Geräte GmbH, IPR2019-01469, Paper 6 at 8 (PTAB Feb. 13, 2020) (precedential). The Board has held that the first prong of *Advanced Bionics* is not met where "neither [the combination references] nor similar prior art was before the examiner and … the prosecution history does not include any overlapping arguments directed to this prior art." *Godbersen-Smith Constr. Co. v. Guntert & Zimmerman Const. Div., Inc*. IPR2021-00050, Paper 24 at 19-21 (PTAB May 7, 2021).

Under the first prong, the G.987.3-Röger-G.988 combination was not before Examiner, and the prosecution history does not include any overlapping arguments directed to at least Röger. For example, Röger was never considered by Examiner as it was not discussed during prosecution or cited on the face of the '892 Patent.

Regardless, the situation presented herein does not fall into the category of case that *Advanced Bionics* was intended to discretionarily deny. Here, during prosecution, Examiner relied on G.987.3 during prosecution to anticipate or render obvious several of the limitations of the claims. In response, Applicant amended independent claim 1 to recite, "transitioning the ONU directly from the first state to the second state and transitioning the ONU directly from the second state to the first state, based on a power management rule" Ex. 1002, 22-34. Examiner was unable to

find this newly identified limitation and allowed the case. However, Röger addresses the exact hole Applicant argued was missing in the prior art and Examiner was unable to find in the prior art—direct transitions between the first state and the second state based on a power management rule. *Id.*; s*ee also* 1[D]. Indeed, this same limitation is the sole limitation that Patent Owner mapped to a portion of the standard in its infringement contentions that was allegedly not in the G.987.3 (2010). Ex. 1005, 11-15. Therefore, the G.987.3-***Röger***-G.988 ground is new should be evaluated as presented herein. *See Amphenol Corporation v. PPC Broadband, Inc.*, IPR2023-01363, Paper 9 at 30-31 (PTAB Mar. 20, 2024) (holding that a combination could not have be "extensively evaluated during prosecution prior to allowance of the claims" when it addressed the limitation that Examiner relied upon in a notice of allowance).

Accordingly, the combination of references used in this Petition cannot be cumulative of the art and/or arguments raised during prosecution as there are material differences between the grounds herein and what was previously presented. *Tianma Microelectronics Co., v. Japan Display Inc.*, IPR2021-01058, Paper 16 at 31 (PTAB Jan. 5, 2022); *Samsung Elecs. Co. v. Dodots Licensing Sols. LLC*, IPR2023- 00756, Paper 9 at 21-22 (PTAB Oct. 11, 2023). Because the first prong is not met, the Board need not move to the second prong. *See id*. at 21; *Oticon Med. AB v. Cochlear Ltd*., IPR2019-00975, Paper 15 at 20 (PTAB Oct. 16, 2019).

Regardless, under the second prong, Examiner committed errors that were material to the patentability of the Challenged Claims. For example, Examiner erred by failing to identify and cite Röger, which disclosed the exact feature Examiner found missing in G.987.3. *See Chemtronics USA, Inc. v. FlatFrog Laboratories AB*, IPR2024-00015, Paper 11 at 19-20 (PTAB Apr. 22, 2024) (finding error when a reference teaches the very same limitation that was used to overcome cited references in prosecution so as to obtain an allowance). These errors are each material to the patentability of the Challenged Claims.

For at least these reasons, the Board should not deny institution under §325(d).

B. *Fintiv*

The claims of the '892 Patent have never been tested in view of the most relevant prior art. In view of these strong challenges and the different upcoming trial dates related to the different district court proceedings, institution should not be discretionarily denied under §314(a). *See NHK Spring Co. v. Intri-Plex Techs., Inc.*, IPR2018-00752, Paper 8 at 19-20 (PTAB Sept. 12, 2018) (precedential); *Apple v. Fintiv, Inc.*, IPR2020-00019, Paper 11 at 13-14 (PTAB Mar. 20, 2020) (precedential).

Factor 1—a potential stay of the district court litigation—is neutral because no party has requested a stay. *VMWare, Inc. v. Intellectual Ventures I LLC*, IPR2020-

00470, Paper 13 at 17 (PTAB Aug. 18, 2020) (finding in the absence of a stay motion that this factor "does not weigh for or against discretionary denial").

Factor 2—the district court trial date and the Board's statutory deadline—should be considered neutral when viewed in light of both district court cases involving the '892 Patent. The '892 Patent is asserted by Patent Owner in two district court cases. In the AT&T case, in which Nokia has intervened, the trial date is set for March 17, 2025. Ex. 1030. In the Verizon case, which involves ONUs that Nokia provides to Verizon[5] and in which Nokia might intervene, the trial date is set for September 22, 2025. Ex. 1032. *Compare* Ex. 1035, ¶61, with Ex. 1036, ¶81; *see e.g.*, *HP Inc. et al. v. Neodron Ltd.*, IPR2020-00459, Paper 17 at 38 (PTAB Sep. 9, 2020) (instituting and finding Factor 2 neutral when the multiple petitioners had different trial dates and not all cases were scheduled for trial prior to the estimated final written decision date).

The Director directed the PTAB to consider "statistics on median time-to-trial for civil actions in the district court in which the parallel litigation resides." Interim Procedure, 8-9. The median time to trial in the Eastern District of Texas is 21.4

[5] Verizon did not participate, or make any contribution substantively or monetarily, to this Petition.

months (Ex. 1031, 35), which gives the AT&T case an estimated trial date of no earlier than March 2025 and the Verizon case an estimated trial date of no earlier than December 2025. Because the earliest trial dates are 10 months (AT&T case) and 19 months (Verizon case), the current trial dates do not support denial. *See Dish Network v. Broadband iTV*, IPR2020-01280, Paper 17 at 16 (PTAB Feb. 4, 2021) ("We cannot ignore the fact that the currently scheduled trial date is more than nine months away and much can change during this time").

Moreover, given the existence of two cases, the potential length of the trials, and post-trial motions, it is likely that the district court proceedings will not be complete before the final written decision in this matter. The Board has frequently held that this factor does not implicate the decision whether to institute "if the trial date is at or around the same time as the projected statutory deadline." *Fintiv*, IPR2020-00019, Paper 11 at 6. Thus, this factor does not support discretionary denial.

Factor 3—investment in the district court proceedings—weighs against discretionary denial. The district court cases are in their early stages and the court has not issued any substantive rulings in either case with respect to the '892 Patent. Specifically, infringement contentions in the AT&T case were served on September 14, 2023, invalidity contentions were served on December 7, 2023, and the claim construction hearing is not scheduled until September 19, 2024. Ex. 1029. No

depositions have taken place whatsoever in the litigation. In the Verizon Case, Petitioners understand that infringement contentions were served on March 11, 2024, invalidity contentions were served on May 6, 2024, and the claim construction hearing is not scheduled until March 11, 2025. Ex. 1032. Accordingly, the district courts will not invest significant resources related to the challenged patent prior to the issuance of an institution decision. *See Fintiv*, IPR2020-00019, Paper 11 at 9-12; *DISH Network L.L.C. v. Broadband iTV, Inc*., IPR2020-01280, Paper 17 at 18-21 (PTAB Feb. 4, 2021).

Factor 4—overlap between this proceeding and the district court proceedings—favors institution. First, the scope of this Petition and the AT&T case is different as this Petition covers a number of claims that are not asserted in the AT&T case. Second, instituting trial will allow issues to be narrowed in the AT&T case because, if instituted, Petitioners stipulate that they will not pursue invalidity against the asserted claims in the district court using the specific combination of prior art references set forth in the grounds presented in this Petition for purposes of establishing obviousness. *See Sand Revolution II LLC v. Continental Intermodal Group-Trucking LLC*, IPR2019-01393, Paper 24 at 11-12 (PTAB June 16, 2020). Given the differences between this proceeding and the AT&T case, this factor weighs against the Board exercising discretion to deny.

Factor 5—overlapping parties—is neutral as it is "far from an unusual circumstance that a petitioner in *inter partes* review and a defendant in a parallel district court proceeding are the same." *Sand Revolution II, LLC v. Continental Intermodal Group*, IPR2019-01393, Paper 24 at 12-13 (PTAB Jun. 16, 2020).

The final *Fintiv* factor—other considerations—weighs strongly against discretionary denial. This is a compelling case, and the merits of the Petition are strong. Indeed, there can be no dispute from patent owner that G.987.3 discloses the elements of the claims in view of the prosecution history and the infringement contentions. To the extent that it is argued that 1[D] is not taught or suggested by the state diagram of G.987.3 and the POSITA's understanding of the market pressure to reduce power consumption, the POSITA would have understood that direct transitions were disclosed by Röger. Moreover, none of the grounds asserted herein were previously considered by either the Office or the district courts. *Cf. Comcast Cable Commn's, LLC v. Rovi Guides, Inc.*, IPR2019-00231, Paper 14 at 11 (PTAB May 20, 2019). Moreover, institution of this IPR provides the opportunity for narrowing and simplifying the litigations.

X. CONCLUSION

Petitioners request cancellation of the Challenged Claims.

XI. MANDATORY NOTICES UNDER 37 C.F.R. §42.8

A. Real Party in Interest Under 37 C.F.R. §42.8(b)(1)

The real parties in interest are Nokia of America Corporation; AT&T Ventures, LLC; AT&T Enterprises, LLC; AT&T Mobility II LLC; AT&T Mobility LLC; AT&T Services, Inc.; AT&T Communications LLC[6]; and AT&T Corp.[7] Out of an abundance of caution, Petitioners have identified all current defendants in the AT&T case as potential real parties in interest only for the purpose of this proceeding and only to the extent that Patent Owner contends that these separate legal entities should be named real parties in interest in this IPR. Petitioners do so to avoid the potential expenditure of resources to resolve such a challenge. Petitioners also acknowledge that each petitioner has a number of affiliates. No unnamed entity is funding, controlling, or otherwise has an opportunity to control or direct this Petition or Petitioners' participation in any resulting IPR. Petitioners are also not aware of any affiliate that would be barred from filing this Petition under 35 U.S.C. § 315(e).

B. Related Matters Under 37 C.F.R. §42.8(b)(2)

The '892 Patent is the subject of litigation pending against AT&T and separately pending against Verizon, as highlighted below:

---

[6] AT&T Communications LLC changed its name to AT&T Ventures, LLC.

[7] AT&T Corp. is now AT&T Enterprises, LLC.

- *Iarnach Technologies Ltd. v. AT&T Corp. et al.*, No. 2:23-cv-00231 (E.D. Tex.);
- *Iarnach Technologies Ltd. v. Verizon Communications, Inc. et al.*, No. 2:23-cv-00631 (E.D. Tex.).

AT&T is a defendant, and Nokia is an intervenor in case No. 2:23-cv-00231. Ex. 1030. Verizon is a defendant in case No. 2:23-cv-00631. Nokia supplies Verizon certain of the accused ONUs in that case. Petitioners are not aware of any other judicial or administrative matter that would affect or be affected by a decision in this IPR.

C. Lead and Back-Up Counsel Under 37 C.F.R. §42.8(b)(3)

Pursuant to 37 C.F.R. §42.8(b)(3), Petitioners provide the following designation of counsel:

Lead Counsel	**Backup Lead Counsel**
Christopher TL Douglas Reg. No. 56,950 **ALSTON & BIRD LLP** Vantage South End 1120 S. Tryon Street, Suite 300 Charlotte, NC 28203 Phone: 704.444.1000 Fax: 704.444.1111 Email: christopher.douglas@alston.com	M. Scott Stevens Reg. No. 54,762 Karlee N. Wroblewski Reg. No. 76,805 Matthew M. Welch Reg. No. 75,429 Bennett M. Hardymon Reg. No. 80,838 **ALSTON & BIRD LLP** Vantage South End 1120 S. Tryon Street, Suite 300 Charlotte, NC 28203 Phone: 704.444.1000 Fax: 704.444.1111 Email: scott.stevens@alston.com Email: karlee.wroblewski@alston.com Email: matt.welch@alston.com Email: bennett.hardymon@alston.com

Pursuant to 37 C.F.R. §42.8(b)(4), counsel agrees to service by mail as detailed above, and to electronic service by email at the following addresses: christopher.douglas@alston.com; scott.stevens@alston.com; karlee.wroblewski@alston.com; matt.welch@alston.com; and bennett.hardymon@alston.com. Pursuant to 37 C.F.R §42.10(b), a Power of Attorney executed by Petitioners accompanies this Petition.

D. Service Information

Please address all correspondence and service to the addresses listed above. Petitioners consent to electronic service directed to

christopher.douglas@alston.com; scott.stevens@alston.com;

karlee.wroblewski@alston.com; matt.welch@alston.com; and

bennett.hardymon@alston.com.

Dated: May 30, 2024

By: / Christopher TL Douglas /

Christopher TL Douglas
Reg. No. 56,950
ALSTON & BIRD LLP
Vantage South End
1120 S. Tryon Street, Suite 300
Charlotte, NC 28203
Phone: 704.444.1119
Fax: 704.444.1799
Email:
christopher.douglas@alston.com

CLAIMS APPENDIX

Claim	Recitation
1[A]	A method of optical communication in a passive optical network, comprising:
1[B]	operating an optical network unit (ONU) in a first state in which a transmitter of the ONU is turned off and a receiver of the ONU is turned on;
1[C]	operating the ONU in a second state in which both the transmitter and the receiver are turned off;
1[D]	transitioning the ONU directly from the first state to the second state and transitioning the ONU directly from the second state to the first state, based on a power management rule;
1[E]	ensuring the ONU is fully powered up, synchronized, and capable of responding to both upstream and downstream traffic and control before exiting the first state or the second state; and
1[G]	receiving, by the receiver, a power management message from an optical line terminal (OLT); and
1[E]	changing the power management rule based on the received power management message.
2	The method of claim 1, further comprising: operating the ONU in a third state in which both the transmitter and the receiver are turned on.
3	The method of claim 1, wherein the power management rule specifies a first time period for operation in the first state and a second time period for operation in the second state and wherein the transitioning is performed upon expiration of at least one of the first time period and the second time period.
4	The method of claim 1, further comprising: transmitting, to an optical line terminal, a message indicative of the transitioning between the first state and the second state.
5	The method of claim 1, further comprising: performing the transitioning responsive to the received power management message and a local decision to change an operational state.
10[A]	An optical communication apparatus, comprising:
10[B]	a memory that stores processor-executable instructions; and
10[C]	a processor that uses the stored instructions to implement a method, comprising operating an optical network unit (ONU) in a first state in which a transmitter of the ONU is turned off and a receiver of the

	ONU is turned on; and operating the ONU in a second state in which both the transmitter and the receiver are turned off; and
10[D]	wherein the processor includes means for transitioning the ONU directly from the first state to the second state and means for transitioning the ONU directly from the second state to the first state, based on a power management rule;
10[E]	wherein the processor uses stored instructions to ensure the ONU is fully powered up, synchronized, and capable of responding to both upstream and downstream traffic and control before exiting the first state or the second state; and
10[F]	wherein the processor further uses the stored instructions to implement the method by receiving, by the receiver, a power management message from an optical line terminal (OLT) and changing the power management rule based on the received power management message.
11	The apparatus as in claim 10, wherein the power management rule specifies a first time period for operation in the first state and a second time period for operation in the second state and wherein the transitioning is performed upon expiration of at least one of the first time period and the second time period.
12[A]	An optical line terminal (OLT) for operation in a passive optical network (PON), the optical line terminal comprising:
12[B]	a processor configured to generate messages for controlling a transition of an optical network unit from a first low power state in which a receiver of the optical network unit is turned on but a transmitter of the optical network unit is turned off to a second low power state in which both the receiver and the transmitter of the optical network unit are turned off;
12[C]	a transmitter configured to transmit the generated messages to the optical network unit;
12[D]	wherein the generated messages comprises a periodic consent message to allow the optical network unit to remain in either the first low power state or the second low power state.
13	The optical line terminal as in claim 12, wherein the processor includes means for specifying a first time period for operation in the first low power state and a second time period for operation in the second low power state and wherein the transition of the optical network unit from the first low power state to the second low power

	state is controlled to occur upon expiration of at least one of the first time period and the second time period.
14[A]	A passive optical network (PON) communications system, comprising:
14[B]	an optical network unit (ONU) operable in a first low power mode in which the ONU is able to receive but not transmit and a second low power mode in which the ONU is not able to either receive or transmit, wherein the ONU is configured to transition from the first low power mode to the second low power mode and to transition from the second low power mode to the first low power mode based on a power management rule, and wherein the ONU changes a power management rule based on a received power management message;
14[C]	an optical line terminal (OLT) communicably coupled to the ONU, the OLT configured to transmit a control message to the ONU to control at least one aspect of transition of the ONU between the first low power mode and the second low power mode; and
14[D]	the ONU configured to ensure that the ONU is fully powered up, synchronized, and capable of responding to both upstream and downstream traffic and control before exiting the first low power mode or the second low power mode.
15	The system as in claim 14, wherein: the OLT is configured to transmit the control message that includes the power management rule that specifies a first time period for operation in the first low power state and a second time period for operation in the second low power state and to control the ONU to transition from the first low power state to the second low power state upon expiration of at least one of the first time period and the second time period.

CERTIFICATE OF WORD COUNT

Petitioners certify that the word count in this Petition is 13,987 words, as counted by the word-processing program (Microsoft Word for Office 365) used to generate this Petition, where such word count excludes the table of contents, table of authorities, mandatory notices, certificate of service, appendix of exhibits, and this certificate of word count. This Petition is in compliance with the 14,000-word limit set in 37 C.F.R. §42.24(a)(1)(i).

Respectfully submitted,

Dated: May 30, 2024

By: / Christopher TL Douglas /

Christopher TL Douglas
Reg. No. 56,950
ALSTON & BIRD LLP
Vantage South End
1120 S. Tryon Street, Suite 300
Charlotte, NC 28203
Phone: 704.444.1119
Fax: 704.444.1799
Email:
christopher.douglas@alston.com

CERTIFICATE OF SERVICE

Pursuant to 37 C.F.R. §§42.6(e), 42.105 and in view of the agreement between the Parties under 37 C.F.R. § 42.105(b), the undersigned hereby certifies that true and correct copies of the above-captioned PETITION FOR INTER PARTES REVIEW OF U.S. PATENT NO. 9,806,892, all associated exhibits, and Petitioner's Power of Attorney were served in their entireties on May 30, 2024, upon the Patent Owner at the following email addresses of Patent Owner's litigation counsel:

Robert Allan Bullwinkel (abullwinkel@hpcllp.com)

Alden Harris (aharris@hpcllp.com)

Blaine Andrew Larson (blarson@hpcllp.com)

Eric James Enger (eenger@hpcllp.com)

Lily Rebecca Glick (lglick@hpcllp.com)

Michael F Heim (mheim@hpcllp.com)

Amir H. Alavi (aalavi@aatriallaw.com)

Demetrios Anaipakos (danaipakos@aatriallaw.com)

Michael Dean McBride (mmcbride@aatriallaw.com)

Andrea Leigh Fair (andrea@wsfirm.com)

Dated: May 30, 2024

By: / Christopher TL Douglas /

Christopher TL Douglas
Reg. No. 56,950
ALSTON & BIRD LLP
Vantage South End
1120 S. Tryon Street, Suite 300
Charlotte, NC 28203
Phone: 704.444.1119
Fax: 704.444.1799
Email:
christopher.douglas@alston.com