File Histories

The world's leading IP decision makers turn to us for one reason. Trust.

Good decisions require reliable intelligence. That's why more IP decision makers rely on us.

We empower companies to build and protect their valuable assets with services that span the full IP lifecycle. Our blend of global expertise, resources, and technology translates to results you can rely on with certainty. In any language, we're the name you can trust.

IP Services from Clarivate Analytics

Patent search and analytics

- Prior art search
- Patent watch
- Patent profiles

Patent licensing

- Patent-to-product mapping
- Standards mapping
- Licensing opportunity analysis
- Patent acquisition analysis
- Claims charting

Patent preparation and prosecution

- Patent drafting
- Prosecution services

IP analytics

- Technology landscaping
- Patent portfolio audit
- Competitive portfolio assessment

IP management

- Data validation services
- IP payments
- IP docketing
- IP management consulting
- Paralegal services
- Proofreading

Translation services and file histories

For more information, call us at +1-800-445-9760 or email **fhservice@clarivate.com**

Alexandria

+1 800 445 9760 (US)
+1 703 916 1500 (International)
filehistories.clarivate.com

IP 1702 300
07.2017
© 2017 Clarivate Analytics

clarivate.com

Clarivate Analytics

fuboTV Media Inc.
Exhibit 1015
Page 001

FILE HISTORY

US 6,161,137

PATENT:	6,161,137
INVENTORS:	OGDON ROBERT H JOHNSON FRANK E
TITLE:	Method and system for providing a presentation on a network
APPLICATION NO:	US199852862A
FILED:	31 MAR 1998
ISSUED:	12 DEC 2000
COMPILED:	06 OCT 2023

JC526 U.S. PTO
09/052862
03/31/98

Class	Subclass
709	224

ISSUE CLASSIFICATION

PATENT NUMBER
6161137
6161137

U.S. UTILITY PATENT APPLICATION

O.I.P.E.	PATENT DATE
SCANNED ____ Q.A. ____	DEC 12 2000

SECTOR	CLASS	SUBCLASS	ART UNIT	EXAMINER
	709	224	6	ROMERO

FILED WITH: ☐ DISK (CRF) ☐ FICHE
(Attached in pocket on right inside flap)

BEST COPY

PREPARED AND APPROVED FOR ISSUE

ISSUING CLASSIFICATION

ORIGINAL		CROSS REFERENCE(S)						
CLASS	SUBCLASS	CLASS	SUBCLASS (ONE SUBCLASS PER BLOCK)					
709	224	709	227	204	231			
INTERNATIONAL CLASSIFICATION								
G06F	15/00							
G06F	15/16							

☐ Continued on Issue Slip Inside File Jacket

☐ TERMINAL DISCLAIMER	DRAWINGS			CLAIMS ALLOWED	
	Sheets Drwg.	Figs. Drwg.	Print Fig.	Total Claims	Print Claim for O.G.
	7	7	1A	43	18
☐ a) The term of this patent subsequent to _____ (date) has been disclaimed.	Almari Romero (Assistant Examiner)		06/6/00 (Date)	NOTICE OF ALLOWANCE MAILED	
☐ b) The term of this patent shall not extend beyond the expiration date of U.S Patent. No. _____	Zarni Maung ZARNI MAUNG PRIMARY EXAMINER (Primary Examiner)		6/14/00 (Date)	6-20-00	
				ISSUE FEE	
				$ Amount Due 605.00	Date Paid 8/24/00
☐ c) The terminal ____ months of this patent have been disclaimed.	terri williams (Legal Instruments Examiner)		6/22/00 (Date)	ISSUE BATCH NUMBER 0321	

WARNING:
The information disclosed herein may be restricted. Unauthorized disclosure may be prohibited by the United States Code Title 35, Sections 122, 181 and 368. Possession outside the U.S. Patent & Trademark Office is restricted to authorized employees and contractors only.

Form PTO-436A
(Rev. 10/97)

Issue Fee In File

(LABEL AREA)

Formal Drawings (___ sht(s) set___

(FACE)

JJ

6,161,137

METHOD AND SYSTEM FOR PROVIDING A PRESENTATION ON A NETWORK

Transaction History

Date	Transaction Description
04-03-1998	Initial Exam Team nn
05-06-1998	Application Dispatched from OIPE
05-27-1998	Information Disclosure Statement (IDS) Filed
05-27-1998	Information Disclosure Statement (IDS) Filed
06-12-1998	Case Docketed to Examiner in GAU
10-13-1998	Information Disclosure Statement (IDS) Filed
10-13-1998	Information Disclosure Statement (IDS) Filed
02-09-1999	Preliminary Amendment
02-09-1999	Information Disclosure Statement (IDS) Filed
02-09-1999	Information Disclosure Statement (IDS) Filed
02-09-1999	Information Disclosure Statement (IDS) Filed
02-09-1999	Information Disclosure Statement (IDS) Filed
07-06-1999	Preliminary Amendment
08-06-1999	Information Disclosure Statement (IDS) Filed
08-06-1999	Information Disclosure Statement (IDS) Filed
09-20-1999	Information Disclosure Statement (IDS) Filed
09-20-1999	Information Disclosure Statement (IDS) Filed
10-19-1999	Case Docketed to Examiner in GAU
12-20-1999	Non-Final Rejection
12-27-1999	Mail Non-Final Rejection
03-28-2000	Response after Non-Final Action
04-03-2000	Information Disclosure Statement (IDS) Filed
04-03-2000	Information Disclosure Statement (IDS) Filed
04-07-2000	Date Forwarded to Examiner
05-24-2000	Interview Summary Record
06-05-2000	Affidavit(s) (Rule 131 or 132) or Exhibit(s) Received
06-13-2000	Information Disclosure Statement (IDS) Filed
06-13-2000	Information Disclosure Statement (IDS) Filed
06-20-2000	Mail Notice of Allowance
06-20-2000	Notice of Allowance Data Verification Completed
07-26-2000	Amendment after Notice of Allowance (Rule 312)
07-26-2000	Interview Summary Record
07-27-2000	Date Forwarded to Examiner
08-04-2000	Mail Response to 312 Amendment (PTO-271)
08-04-2000	Response to Amendment under Rule 312
08-24-2000	Issue Fee Payment Verified
08-28-2000	Workflow - Drawings Finished
08-28-2000	Workflow - Drawings Matched with File at Contractor
08-28-2000	Workflow - Drawings Received at Contractor
08-28-2000	Workflow - Drawings Sent to Contractor
09-06-2000	Workflow - Complete WF Records for Drawings
09-10-2000	Application Is Considered Ready for Issue
11-24-2000	Issue Notification Mailed
12-12-2000	Recordation of Patent Grant Mailed
05-08-2012	Petition Entered
06-05-2012	Correspondence Address Change
06-11-2012	File Marked Lost
06-18-2012	Petition Decision - Granted
06-19-2012	Mail-Petition Decision - Granted
06-23-2012	Email Notification
09-07-2012	Email Notification
09-07-2012	Change in Power of Attorney (May Include Associate POA)

02-28-2014	Correspondence Address Change
03-10-2014	Email Notification
03-10-2014	Change in Power of Attorney (May Include Associate POA)
03-28-2017	Correspondence Address Change
03-29-2017	Email Notification
03-29-2017	Change in Power of Attorney (May Include Associate POA)

JC526 U.S. PTO
09/052862
03/31/98

PATENT APPLICATION

09052862

APR 0 7 9 8 3 4

INITIALS _____

CONTENTS

	Date received (Incl. C. of M.) or Date Mailed		Date received Incl. C. of M.) or Date Mailed
1. Application 7 papers.		42.	
2. IDS	5-27-98	43.	
3. Info Disclosure St.	10/13/98	44.	
4. I.D.S.	2.9.99	45.	
5. Pre-amdt-A	2-9-99	46.	
6. Pre-amdt-B	7-6-99	47.	
7. IDS	8/6/99	48.	
8. IDS	9/20/99	49.	
12/00 9. Reply Brief	12-27-99	50.	
10. Amendment C	3/28/00 3/22/00	51.	
11. Change address P/A	12-14-99	52.	
12. IDS	4/3/00	53.	
13. Interview Summary	5/24/00	54.	
14. Declaration	6/5/00	55.	
15. IDS	6/13/00	56.	
16. Examiner Amendment	6-20-00	57.	
17. Interview Summary	7/26/00	58.	
18. Amendment E	8-4-00	59.	
19. 9/6/00 Formal Drawings (2 shts)	8/28/00	60.	
20.		61.	
21.		62.	
22.		63.	
23.		64.	
24.		65.	
25.		66.	
26.		67.	
27.		68.	
28.		69.	
29.		70.	
30.		71.	
31.		72.	
32.		73.	
33.		74.	
34.		75.	
35.		76.	
36.		77.	
37.		78.	
38.		79.	
39.		80.	
40.		81.	
41.		82.	

(FRONT)

ISSUE SLIP STAPLE AREA (for additional cross references)

POSITION	INITIALS	ID NO.	DATE
FEE DETERMINATION	1003	066000	4/3
O.I.P.E. CLASSIFIER		10	4-17-98
FORMALITY REVIEW		71476	5/5/98

INDEX OF CLAIMS

✓ ..... Rejected
= ..... Allowed
— (Through numeral) Canceled
÷ ..... Restricted

N ..... Non-elected
I ..... Interference
A ..... Appeal
O ..... Objected

Claim Final	Claim Original	Date 12/14/99	Date 06/16/00	Date 8/11/00
	57	✓	=	=
2	58			
3	59			
4	60			
5	61			
6	62			
7	63			
8	64			
9	65			
10	66			
11	67			
12	68			
13	69			
14	70			
15	71	✓	✓	✓
16	72	✓	=	=
17	73	✓		
18	74	✓		
19	75	✓		
21	76	✓	✓	✓
	77		=	=
23	78			
24	79			
25	80			
26	81			
27	82			
	83			
29	84			
30	85			
	86			=
	87	✓		✓
33	88	✓		=
34	89	✓		=
35	90	✓		=
37	91	✓		=
38	92	✓		=
39	93	✓		=
41	94	✓		=
42	95	✓	✓	=
43	96	✓	✓	=
	97			=
	98			=
40	99			=
	100			

Claim Final	Claim Original	Date
	110	
	112	
	113	
	114	
	115	
	116	
	117	
	118	
	119	
	110	
	111	
	112	
	113	
	114	
	115	
	116	
	117	
	118	
	119	
	120	
	121	
	122	
	123	
	124	
	125	
	126	
	127	
	128	
	129	
	130	
	131	
	132	
	133	
	134	
	135	
	136	
	137	
	138	
	139	
	140	
	141	
	142	
	143	
	144	
	145	
	146	
	147	
	148	
	149	
	150	

If more than 150 claims or 10 actions
staple additional sheet here

(LEFT INSIDE)

[redacted]

SEARCHED

Class	Sub.	Date	Exmr.
709	204	12/19/99	AR
	224	12/19/99	AR
709	231	12/19/99	AR
709	226	12/19/99	AR
370	366	12/19/99	AR
707	104	12/19/99	AR
Updated Search		6/6/00	AR
709	227	6/6/00	AR

SEARCH NOTES
(INCLUDING SEARCH STRATEGY)

EAST TEXT & Image Search Attached	Date	Exmr.
	12/19/99	AR
IBM Search	12/19/99	AR
Conferred to Primary Exr. Zarni Maung	5/23/00	AR
Updated Search	6/6/00	AR
EIC - Non-Patent Literature (IEEE) - Patent (DERWENT) - Bibliography Search	attached	

INTERFERENCE SEARCHED

Class	Sub.	Date	Exmr.
709	204	06/06/00	AR
	224		AR
	227		AR
709	231	06/06/00	AR

(RIGHT OUTSIDE)

US006161137A

United States Patent [19]

Ogdon et al.

[11] **Patent Number: 6,161,137**

[45] **Date of Patent: Dec. 12, 2000**

[54] **METHOD AND SYSTEM FOR PROVIDING A PRESENTATION ON A NETWORK**

[75] Inventors: **Robert H. Ogdon**, Littleton, Colo.; **Frank E. Johnson**, Aurora, Ill.

[73] Assignee: **MSHOW.com, Inc.**, Highlands Ranch, Colo.

[21] Appl. No.: **09/052,862**

[22] Filed: **Mar. 31, 1998**

Related U.S. Application Data

[60] Provisional application No. 60/041,770, Mar. 31, 1997.

[51] **Int. Cl.**[7] **G06F 15/00**; G06F 15/16

[52] **U.S. Cl.** **709/224**; 709/227; 709/204; 709/231

[58] **Field of Search** 709/204, 224, 709/231, 226, 227; 370/366; 707/104

[56] **References Cited**

U.S. PATENT DOCUMENTS

4,650,929	3/1987	Boerger et al.	358/86
4,710,917	12/1987	Tompkins et al.	370/62
5,003,532	3/1991	Ashida et al.	370/62
5,422,893	6/1995	Gregg et al.	371/32
5,473,363	12/1995	Ng et al.	348/15
5,473,744	12/1995	Allen et al.	395/154
5,473,772	12/1995	Halliwell et al.	395/650
5,473,773	12/1995	Aman et al.	395/650
5,491,797	2/1996	Thompson et al.	395/200.03
5,526,037	6/1996	Cortjens et al.	348/15
5,553,068	9/1996	Aso et al.	370/60
5,555,017	9/1996	Landante et al.	348/15
5,557,607	9/1996	Holden	370/58.2
5,563,878	10/1996	Blakeley	370/60
5,568,183	10/1996	Cortjens et al.	348/15
5,590,127	12/1996	Bales et al.	370/260
5,594,495	1/1997	Palmer et al.	348/17
5,625,410	4/1997	Washino et al.	348/154
5,642,151	6/1997	Nusbickel et al.	348/6
5,684,918	11/1997	Abecassis	386/83
5,758,257	5/1998	Herz et al.	455/2
5,759,101	6/1998	Von Kohorn	463/40
5,774,698	6/1998	Olnowich	370/366
5,848,396	12/1998	Gerace	705/10
5,864,682	1/1999	Porter et al.	709/231
5,867,494	2/1999	Krishnaswamy et al.	370/352
5,928,330	7/1999	Goetz et al.	709/231
5,944,791	8/1999	Scherpbier	709/218
5,948,065	9/1999	Eilert et al.	709/226
5,956,716	9/1999	Kenner et al.	707/10
5,956,729	9/1999	Goetz et al.	707/104
5,999,525	12/1999	Krishnaswamy et al.	370/352

OTHER PUBLICATIONS

Anonymous, "Putting the magic in mulitmedia", Computer Design, v30, n12, p. 31, Sep. 1991.

Adjeroh et al., "Synchronization Mechanisms for Distributed Multimedia Presentation Systems", IEEE, pp. 30–37, Aug. 1995.

Primary Examiner—Zarni Maung
Assistant Examiner—Almari Romero
Attorney, Agent, or Firm—Sheridan Ross P.C.

[57] **ABSTRACT**

A presentation system is disclosed for distributing a performance of a presentation synchronously to a plurality of client nodes on a network such as the Internet. The presentation system distributes presentation content data to a plurality of network server nodes, and during a performance of the presentation, the client nodes receiving the presentation determine a particular variation of data presentation to retrieve from the network server nodes. In particular, the retrieval of presentation data depends upon the transmission characteristics of the network such as data transmission rate. Thus, if a low transmission data rate is detected at a first client node, presentation elements of a reduced size can be retrieved. Alternatively, if a higher transmission rate is detected at a second client node, presentation elements of greater size (and corresponding enhanced quality of presentation) can be retrieved. Thus, within a single performance, client network nodes with varying available network bandwidths can be utilized for synchronously and simultaneously performing the presentation.

43 Claims, 7 Drawing Sheets

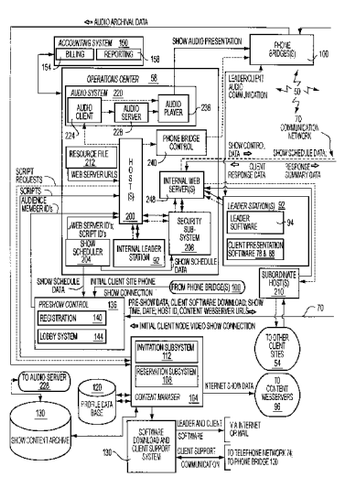

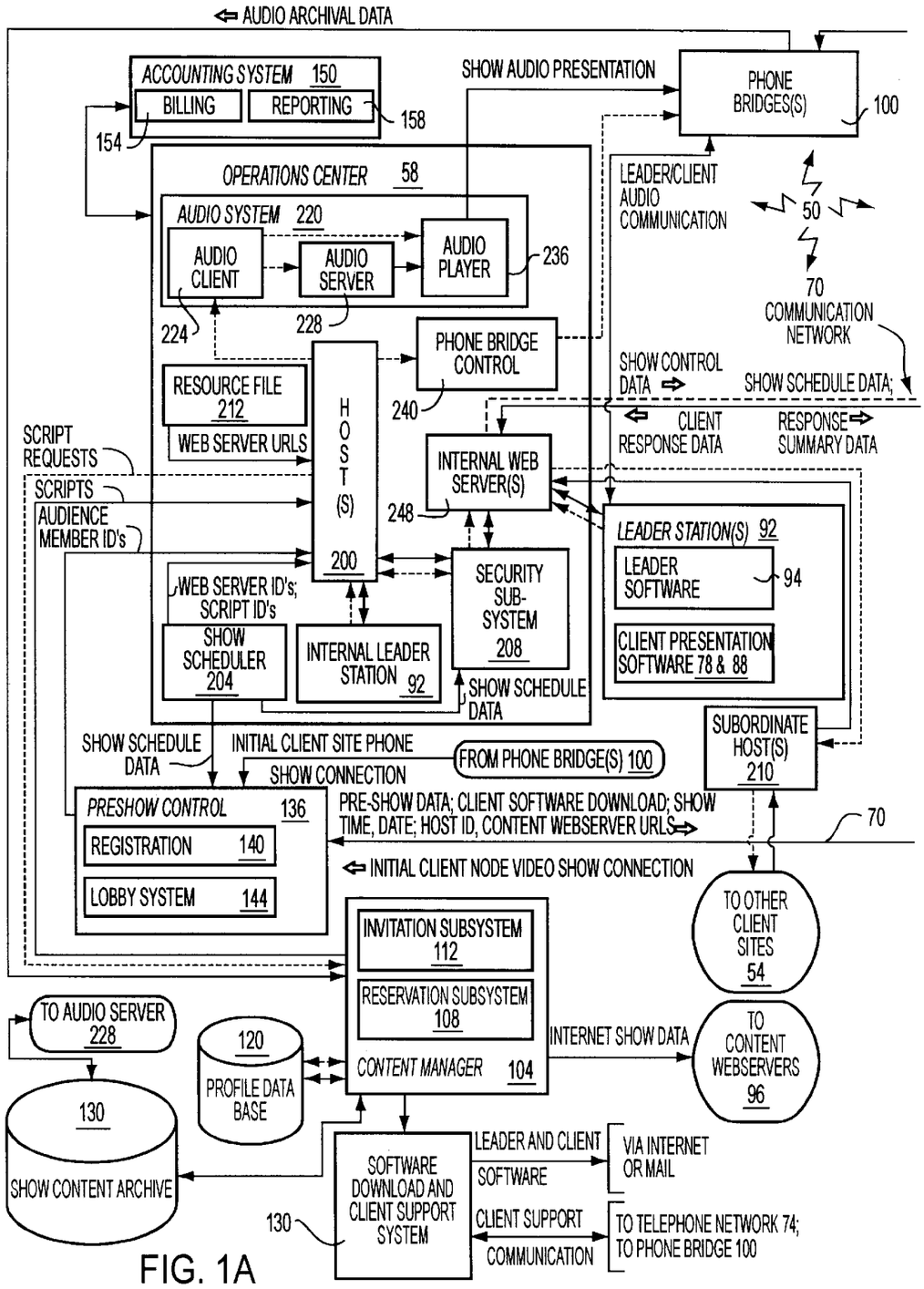
AUDIO ARCHIVAL DATA
ACCOUNTING SYSTEM 150
BILLING
REPORTING
158
154
SHOW AUDIO PRESENTATION
PHONE BRIDGE(S)
100
OPERATIONS CENTER 58
AUDIO SYSTEM 220
AUDIO CLIENT
AUDIO SERVER
AUDIO PLAYER
236
224
228
LEADER/CLIENT AUDIO COMMUNICATION
50
70
COMMUNICATION NETWORK
PHONE BRIDGE CONTROL
240
SHOW CONTROL DATA
SHOW SCHEDULE DATA;
RESOURCE FILE 212
WEB SERVER URLS
HOST(S) 200
CLIENT RESPONSE DATA
RESPONSE SUMMARY DATA
SCRIPT REQUESTS
INTERNAL WEB SERVER(S)
SCRIPTS
248
AUDIENCE MEMBER ID's
LEADER STATION(S) 92
LEADER SOFTWARE
94
WEB SERVER ID's; SCRIPT ID's
SECURITY SUB-SYSTEM 208
CLIENT PRESENTATION SOFTWARE 78 & 88
SHOW SCHEDULER 204
INTERNAL LEADER STATION 92
SHOW SCHEDULE DATA
SUBORDINATE HOST(S) 210
SHOW SCHEDULE DATA
INITIAL CLIENT SITE PHONE
FROM PHONE BRIDGE(S) 100
SHOW CONNECTION
PRESHOW CONTROL 136
PRE-SHOW DATA; CLIENT SOFTWARE DOWNLOAD; SHOW TIME, DATE; HOST ID, CONTENT WEBSERVER URLS
70
REGISTRATION 140
INITIAL CLIENT NODE VIDEO SHOW CONNECTION
LOBBY SYSTEM 144
TO OTHER CLIENT SITES 54
INVITATION SUBSYSTEM 112
RESERVATION SUBSYSTEM 108
TO AUDIO SERVER 228
120
INTERNET SHOW DATA
TO CONTENT WEBSERVERS 96
PROFILE DATA BASE
CONTENT MANAGER 104
130
LEADER AND CLIENT SOFTWARE
VIA INTERNET OR MAIL
SHOW CONTENT ARCHIVE
SOFTWARE DOWNLOAD AND CLIENT SUPPORT SYSTEM
CLIENT SUPPORT COMMUNICATION
TO TELEPHONE NETWORK 74; TO PHONE BRIDGE 100
130

FIG. 1A

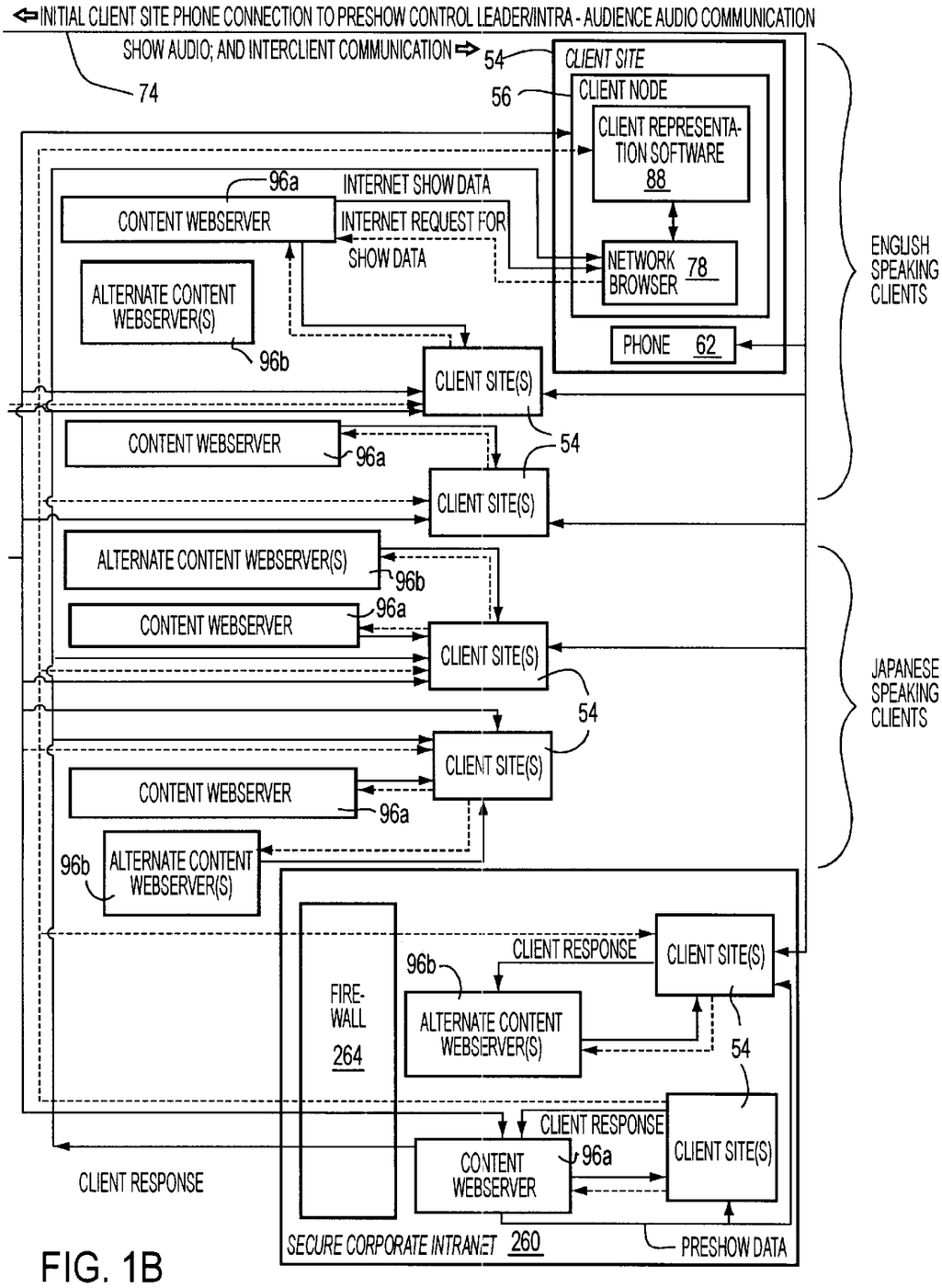
INITIAL CLIENT SITE PHONE CONNECTION TO PRESHOW CONTROL LEADER/INTRA - AUDIENCE AUDIO COMMUNICATION
SHOW AUDIO; AND INTERCLIENT COMMUNICATION
74
54
CLIENT SITE
56
CLIENT NODE
CLIENT REPRESENTATION SOFTWARE 88
96a
INTERNET SHOW DATA
CONTENT WEBSERVER
INTERNET REQUEST FOR SHOW DATA
NETWORK BROWSER 78
ALTERNATE CONTENT WEBSERVER(S)
96b
PHONE 62
CLIENT SITE(S)
CONTENT WEBSERVER
96a
54
CLIENT SITE(S)
ALTERNATE CONTENT WEBSERVER(S)
96b
CONTENT WEBSERVER
96a
CLIENT SITE(S)
54
CLIENT SITE(S)
CONTENT WEBSERVER
96a
96b
ALTERNATE CONTENT WEBSERVER(S)
ENGLISH SPEAKING CLIENTS
JAPANESE SPEAKING CLIENTS
CLIENT RESPONSE
CLIENT SITE(S)
96b
FIRE-WALL 264
ALTERNATE CONTENT WEBSERVER(S)
54
CLIENT RESPONSE
CLIENT SITE(S)
CONTENT WEBSERVER
96a
CLIENT RESPONSE
SECURE CORPORATE INTRANET 260
PRESHOW DATA

FIG. 1B

FIG. 2A

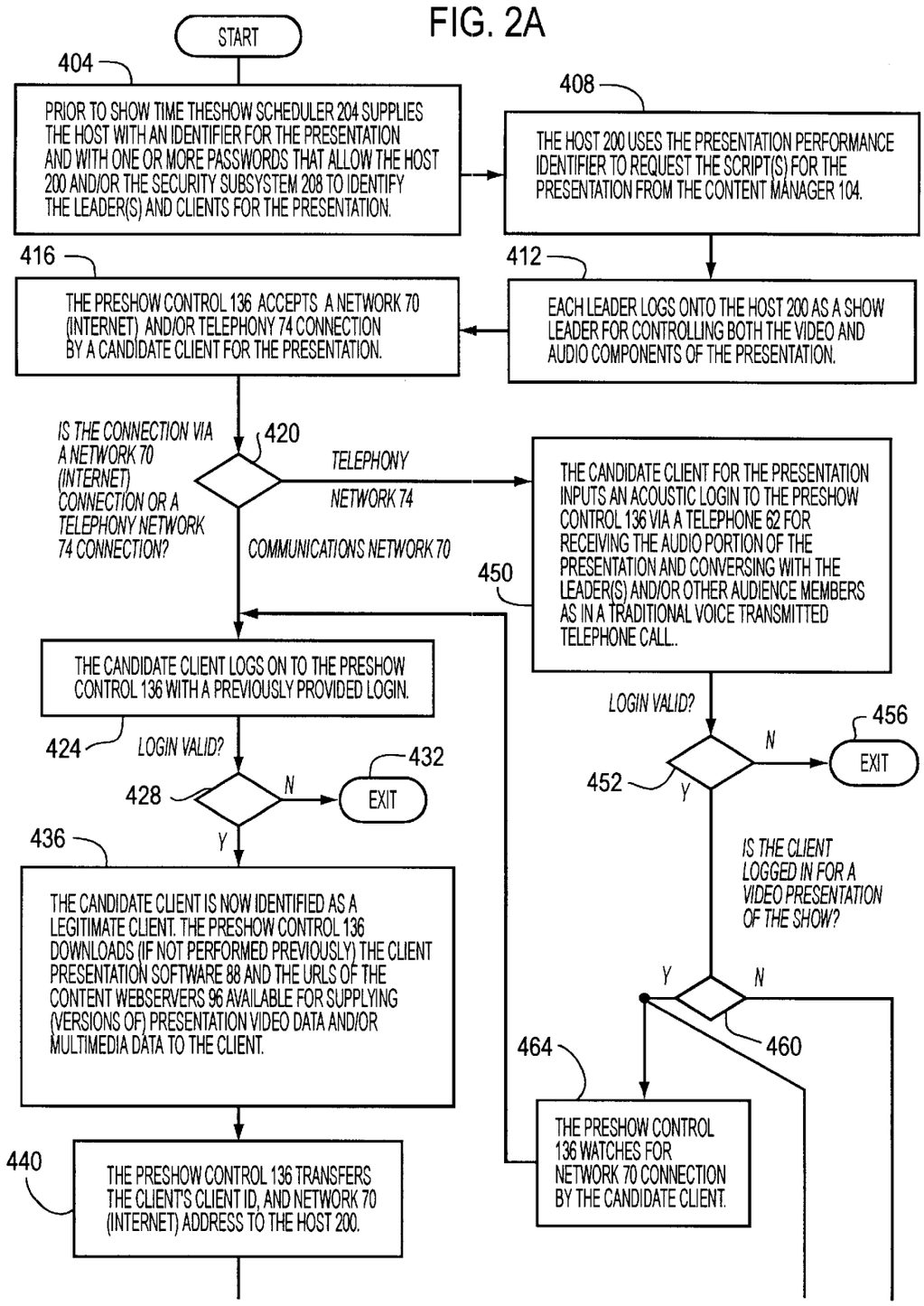
START
404
PRIOR TO SHOW TIME THESHOW SCHEDULER 204 SUPPLIES THE HOST WITH AN IDENTIFIER FOR THE PRESENTATION AND WITH ONE OR MORE PASSWORDS THAT ALLOW THE HOST 200 AND/OR THE SECURITY SUBSYSTEM 208 TO IDENTIFY THE LEADER(S) AND CLIENTS FOR THE PRESENTATION.
408
THE HOST 200 USES THE PRESENTATION PERFORMANCE IDENTIFIER TO REQUEST THE SCRIPT(S) FOR THE PRESENTATION FROM THE CONTENT MANAGER 104.
416
THE PRESHOW CONTROL 136 ACCEPTS A NETWORK 70 (INTERNET) AND/OR TELEPHONY 74 CONNECTION BY A CANDIDATE CLIENT FOR THE PRESENTATION.
412
EACH LEADER LOGS ONTO THE HOST 200 AS A SHOW LEADER FOR CONTROLLING BOTH THE VIDEO AND AUDIO COMPONENTS OF THE PRESENTATION.
IS THE CONNECTION VIA A NETWORK 70 (INTERNET) CONNECTION OR A TELEPHONY NETWORK 74 CONNECTION?
420
TELEPHONY NETWORK 74
COMMUNICATIONS NETWORK 70
THE CANDIDATE CLIENT FOR THE PRESENTATION INPUTS AN ACOUSTIC LOGIN TO THE PRESHOW CONTROL 136 VIA A TELEPHONE 62 FOR RECEIVING THE AUDIO PORTION OF THE PRESENTATION AND CONVERSING WITH THE LEADER(S) AND/OR OTHER AUDIENCE MEMBERS AS IN A TRADITIONAL VOICE TRANSMITTED TELEPHONE CALL..
450
THE CANDIDATE CLIENT LOGS ON TO THE PRESHOW CONTROL 136 WITH A PREVIOUSLY PROVIDED LOGIN.
424
LOGIN VALID?
428
N
EXIT
432
Y
436
THE CANDIDATE CLIENT IS NOW IDENTIFIED AS A LEGITIMATE CLIENT. THE PRESHOW CONTROL 136 DOWNLOADS (IF NOT PERFORMED PREVIOUSLY) THE CLIENT PRESENTATION SOFTWARE 88 AND THE URLS OF THE CONTENT WEBSERVERS 96 AVAILABLE FOR SUPPLYING (VERSIONS OF) PRESENTATION VIDEO DATA AND/OR MULTIMEDIA DATA TO THE CLIENT.
440
THE PRESHOW CONTROL 136 TRANSFERS THE CLIENT'S CLIENT ID, AND NETWORK 70 (INTERNET) ADDRESS TO THE HOST 200.
LOGIN VALID?
452
N
EXIT
456
Y
IS THE CLIENT LOGGED IN FOR A VIDEO PRESENTATION OF THE SHOW?
Y
N
460
464
THE PRESHOW CONTROL 136 WATCHES FOR NETWORK 70 CONNECTION BY THE CANDIDATE CLIENT.

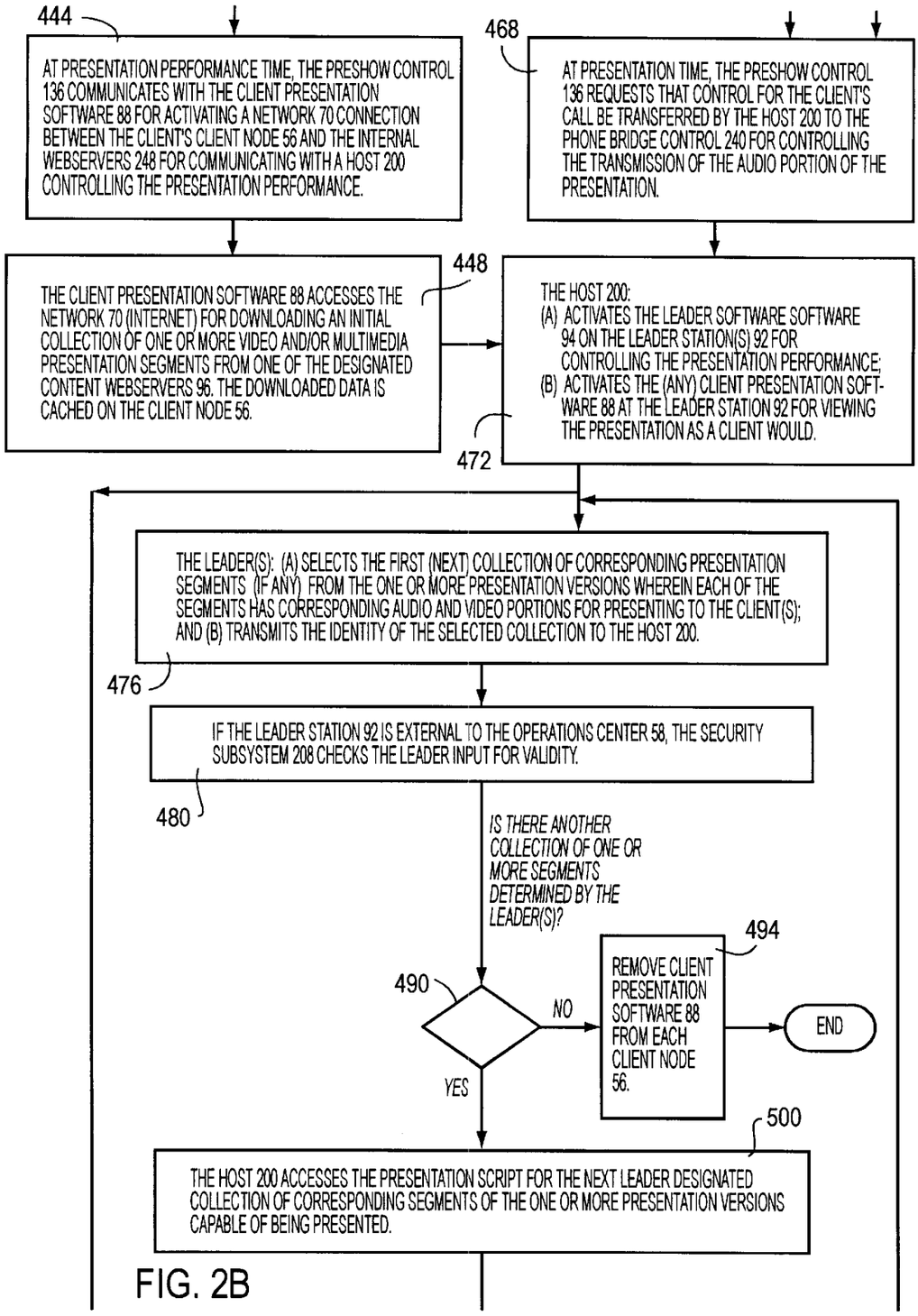
444
AT PRESENTATION PERFORMANCE TIME, THE PRESHOW CONTROL 136 COMMUNICATES WITH THE CLIENT PRESENTATION SOFTWARE 88 FOR ACTIVATING A NETWORK 70 CONNECTION BETWEEN THE CLIENT'S CLIENT NODE 56 AND THE INTERNAL WEBSERVERS 248 FOR COMMUNICATING WITH A HOST 200 CONTROLLING THE PRESENTATION PERFORMANCE.
468
AT PRESENTATION TIME, THE PRESHOW CONTROL 136 REQUESTS THAT CONTROL FOR THE CLIENT'S CALL BE TRANSFERRED BY THE HOST 200 TO THE PHONE BRIDGE CONTROL 240 FOR CONTROLLING THE TRANSMISSION OF THE AUDIO PORTION OF THE PRESENTATION.
448
THE CLIENT PRESENTATION SOFTWARE 88 ACCESSES THE NETWORK 70 (INTERNET) FOR DOWNLOADING AN INITIAL COLLECTION OF ONE OR MORE VIDEO AND/OR MULTIMEDIA PRESENTATION SEGMENTS FROM ONE OF THE DESIGNATED CONTENT WEBSERVERS 96. THE DOWNLOADED DATA IS CACHED ON THE CLIENT NODE 56.
THE HOST 200:
(A) ACTIVATES THE LEADER SOFTWARE SOFTWARE 94 ON THE LEADER STATION(S) 92 FOR CONTROLLING THE PRESENTATION PERFORMANCE;
(B) ACTIVATES THE (ANY) CLIENT PRESENTATION SOFTWARE 88 AT THE LEADER STATION 92 FOR VIEWING THE PRESENTATION AS A CLIENT WOULD.
472
THE LEADER(S): (A) SELECTS THE FIRST (NEXT) COLLECTION OF CORRESPONDING PRESENTATION SEGMENTS (IF ANY) FROM THE ONE OR MORE PRESENTATION VERSIONS WHEREIN EACH OF THE SEGMENTS HAS CORRESPONDING AUDIO AND VIDEO PORTIONS FOR PRESENTING TO THE CLIENT(S); AND (B) TRANSMITS THE IDENTITY OF THE SELECTED COLLECTION TO THE HOST 200.
476
IF THE LEADER STATION 92 IS EXTERNAL TO THE OPERATIONS CENTER 58, THE SECURITY SUBSYSTEM 208 CHECKS THE LEADER INPUT FOR VALIDITY.
480
IS THERE ANOTHER COLLECTION OF ONE OR MORE SEGMENTS DETERMINED BY THE LEADER(S)?
490
NO
YES
494
REMOVE CLIENT PRESENTATION SOFTWARE 88 FROM EACH CLIENT NODE 56.
END
500
THE HOST 200 ACCESSES THE PRESENTATION SCRIPT FOR THE NEXT LEADER DESIGNATED COLLECTION OF CORRESPONDING SEGMENTS OF THE ONE OR MORE PRESENTATION VERSIONS CAPABLE OF BEING PRESENTED.

FIG. 2B

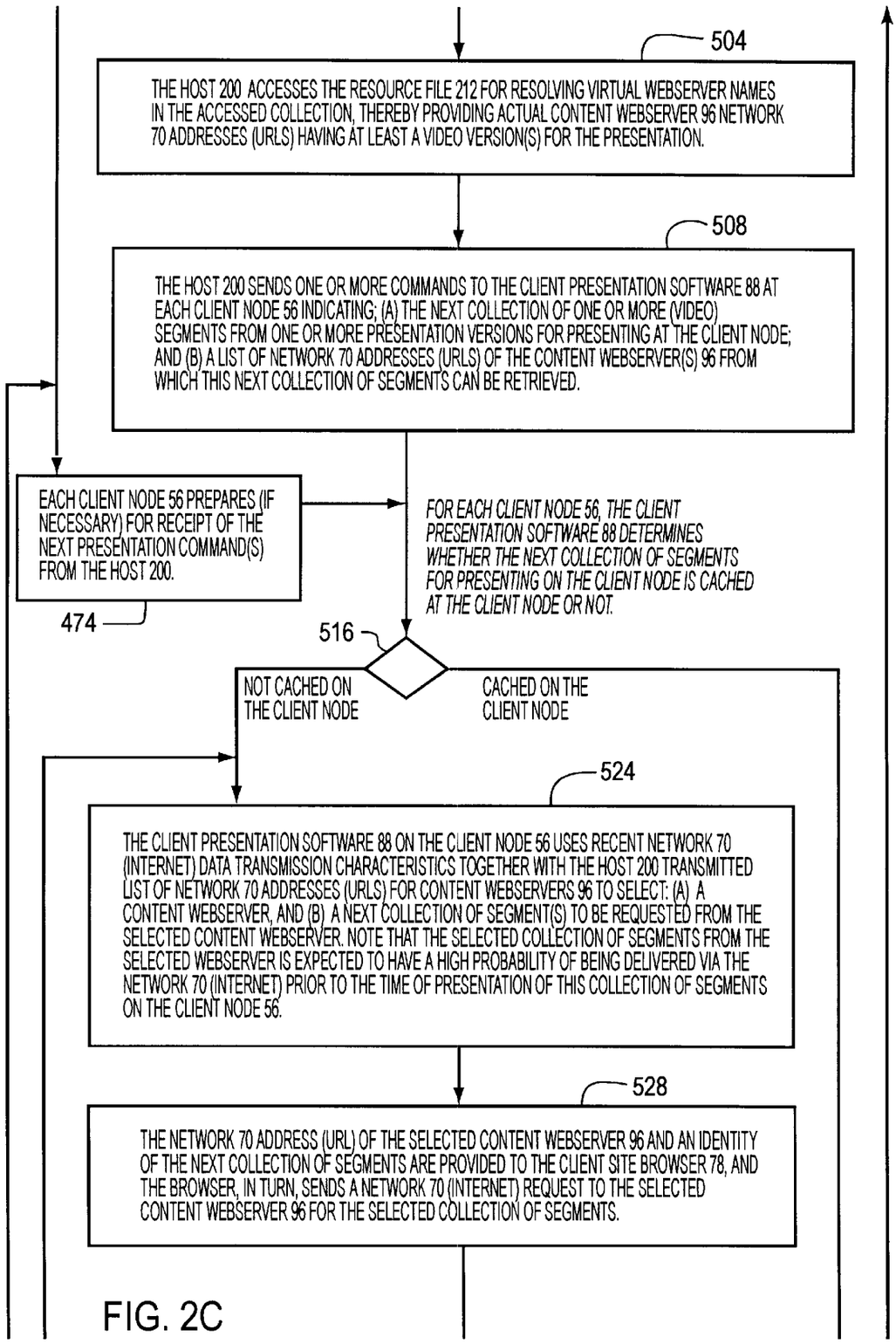
504
THE HOST 200 ACCESSES THE RESOURCE FILE 212 FOR RESOLVING VIRTUAL WEBSERVER NAMES IN THE ACCESSED COLLECTION, THEREBY PROVIDING ACTUAL CONTENT WEBSERVER 96 NETWORK 70 ADDRESSES (URLS) HAVING AT LEAST A VIDEO VERSION(S) FOR THE PRESENTATION.
508
THE HOST 200 SENDS ONE OR MORE COMMANDS TO THE CLIENT PRESENTATION SOFTWARE 88 AT EACH CLIENT NODE 56 INDICATING; (A) THE NEXT COLLECTION OF ONE OR MORE (VIDEO) SEGMENTS FROM ONE OR MORE PRESENTATION VERSIONS FOR PRESENTING AT THE CLIENT NODE; AND (B) A LIST OF NETWORK 70 ADDRESSES (URLS) OF THE CONTENT WEBSERVER(S) 96 FROM WHICH THIS NEXT COLLECTION OF SEGMENTS CAN BE RETRIEVED.
EACH CLIENT NODE 56 PREPARES (IF NECESSARY) FOR RECEIPT OF THE NEXT PRESENTATION COMMAND(S) FROM THE HOST 200.
474
FOR EACH CLIENT NODE 56, THE CLIENT PRESENTATION SOFTWARE 88 DETERMINES WHETHER THE NEXT COLLECTION OF SEGMENTS FOR PRESENTING ON THE CLIENT NODE IS CACHED AT THE CLIENT NODE OR NOT.
516
NOT CACHED ON THE CLIENT NODE
CACHED ON THE CLIENT NODE
524
THE CLIENT PRESENTATION SOFTWARE 88 ON THE CLIENT NODE 56 USES RECENT NETWORK 70 (INTERNET) DATA TRANSMISSION CHARACTERISTICS TOGETHER WITH THE HOST 200 TRANSMITTED LIST OF NETWORK 70 ADDRESSES (URLS) FOR CONTENT WEBSERVERS 96 TO SELECT: (A) A CONTENT WEBSERVER, AND (B) A NEXT COLLECTION OF SEGMENT(S) TO BE REQUESTED FROM THE SELECTED CONTENT WEBSERVER. NOTE THAT THE SELECTED COLLECTION OF SEGMENTS FROM THE SELECTED WEBSERVER IS EXPECTED TO HAVE A HIGH PROBABILITY OF BEING DELIVERED VIA THE NETWORK 70 (INTERNET) PRIOR TO THE TIME OF PRESENTATION OF THIS COLLECTION OF SEGMENTS ON THE CLIENT NODE 56.
528
THE NETWORK 70 ADDRESS (URL) OF THE SELECTED CONTENT WEBSERVER 96 AND AN IDENTITY OF THE NEXT COLLECTION OF SEGMENTS ARE PROVIDED TO THE CLIENT SITE BROWSER 78, AND THE BROWSER, IN TURN, SENDS A NETWORK 70 (INTERNET) REQUEST TO THE SELECTED CONTENT WEBSERVER 96 FOR THE SELECTED COLLECTION OF SEGMENTS.

FIG. 2C

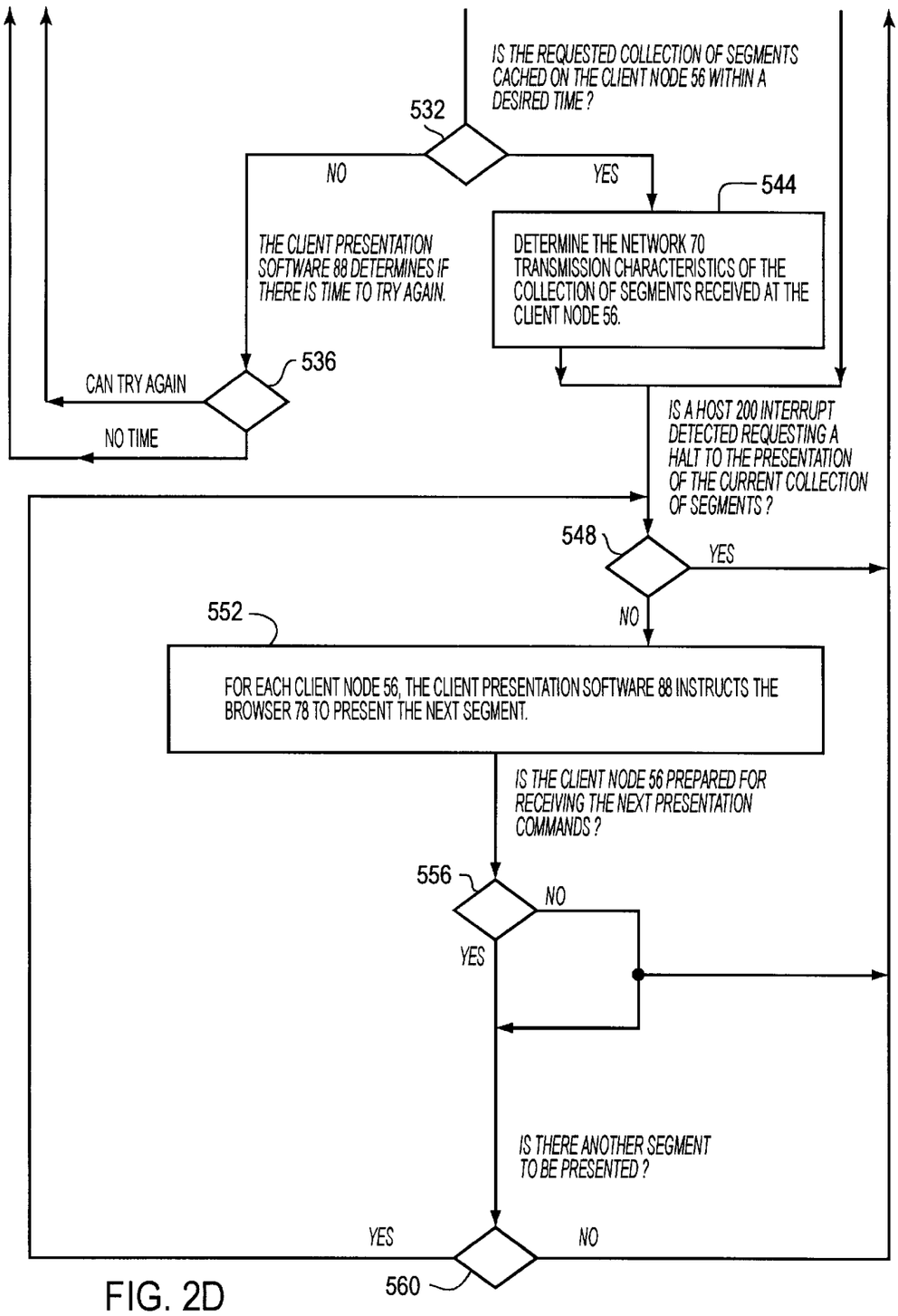
IS THE REQUESTED COLLECTION OF SEGMENTS CACHED ON THE CLIENT NODE 56 WITHIN A DESIRED TIME ?
532
NO
YES
544
DETERMINE THE NETWORK 70 TRANSMISSION CHARACTERISTICS OF THE COLLECTION OF SEGMENTS RECEIVED AT THE CLIENT NODE 56.
THE CLIENT PRESENTATION SOFTWARE 88 DETERMINES IF THERE IS TIME TO TRY AGAIN.
536
CAN TRY AGAIN
NO TIME
IS A HOST 200 INTERRUPT DETECTED REQUESTING A HALT TO THE PRESENTATION OF THE CURRENT COLLECTION OF SEGMENTS ?
548
YES
NO
552
FOR EACH CLIENT NODE 56, THE CLIENT PRESENTATION SOFTWARE 88 INSTRUCTS THE BROWSER 78 TO PRESENT THE NEXT SEGMENT.
IS THE CLIENT NODE 56 PREPARED FOR RECEIVING THE NEXT PRESENTATION COMMANDS ?
556
NO
YES
IS THERE ANOTHER SEGMENT TO BE PRESENTED ?
YES
NO
560

FIG. 2D

600

	612 SCRIPT LEVEL	616 ITEM #	620 VIRTUAL TIME HR:MIN:SEC	624 ACTION	632 RESOURCE TYPE	636 RESOURCE LOCATION	640 RESOURCE NAME
608a	1	1	0.00	Client_Load	FTP File	Server Name (SN)	Path + File *
608b	2				FTP Dir	Server Name	Path
608c	3			client_Free	FTP File	"TWFTP"	File
608d	1,2			client_Display	HTML_File	SN | TWFTP | CD | LOCAL	Path + File | File *
608e	1,3	2	1:01.00		MC_Question	SN | TWFTP | CD | LOCAL	Path + File | File *
608f	2,3				MC_Answer	SN | TWFTP | CD | LOCAL	Path + File | File *
608g	1,2,3				Info_Form	SN | TWFTP | CD | LOCAL	Path + File | File *
608h	1,2,3			client_Play	Audio_RaFile	Server Name	Path + File *
608i	1,2,3				Audio_RaLive	Server Name	Encoder Task
608j	1,2,3		0.00	leader_Hold	———	———	———
608k	1,2,3			time_Set_At	"THIS LINE"	———	———
608l	1,2,3			time_Hold_To	HTML_File	"END" | "GOT"	———
608m	1,2,3				Audio_RaFile	"END"	———
608n	1,2,3			child_Script	TW script	"this"	Path + File
608o	1,2,3			End_Start	———	———	———
608p	1,2,3	999		END	———	———	———
608q	END						

FIG. 3

fuboTV Media Inc.
Exhibit 1015
Page 016

METHOD AND SYSTEM FOR PROVIDING A PRESENTATION ON A NETWORK

The present application claims the benefit of U.S. Provisional Application Ser. No. 06/041,770, filed Mar. 31, 1997.

FIELD OF THE INVENTION

The present invention relates to a networked presentation system for providing a presentation to a plurality of client nodes on a communications network such as the Internet, and more particularly to a presentation system wherein network transmission characteristics are utilized in determining the presentation materials presented at each client node during a performance of the presentation.

BACKGROUND OF THE INVENTION

Interactive or live presentations via a telecommunications network (i.e., "telepresentations" such as teleconferences etc.) are becoming a viable alternative to face-to-face meetings due to the greater cost effectiveness of such telepresentations. However, there is still substantial expense in conducting such a telepresentation, particularly when the presentation members (i.e., presentation leaders and audience members) reside at a large number of geographically scattered sites. In particular, each of the sites may require specialized video conferencing systems with high data transmission lines for connecting the telepresentation members. Thus, due to the expense of provisioning and maintaining such networked conferencing systems, corporations typically have only a small number of such conferencing systems at strategically located telepresentation centers for conducting such telepresentations. However, there are numerous drawbacks to this approach, such as:

(1.1) The dedicated telepresentation centers are expensive to maintain;

(1.2) Presentation participants are still required to travel to these centers; and

(1.3) Potential members of such a presentation who are not able to access such a center are excluded from the presentation.

Accordingly, it would be advantageous to have a network presentation distribution system that alleviates these drawbacks, wherein such a system would allow individuals to access and/or participate in a presentation using standard telephony and Internet network connections found in most offices and many homes.

SUMMARY OF THE INVENTION

The present invention is a network presentation distribution system for providing a presentation, via one or more communication networks, to a plurality of presentation members simultaneously. That is, the present invention distributes a presentation synchronously to presentation members via the one or more communication networks, wherein a communication network is defined as both the physical components and the communication protocol(s) utilized on the network components and wherein the term, "presentation members" (also denoted "users"), includes both audience members (also denoted "clients") and presentation leaders. Moreover, the present invention provides interactive and/or real-time presentations to presentation members that are geographically scattered when each such member has access to one or more commonly available communication networks such as the Internet and a conventional telephony network for telephone-to-telephone voice

communication. For example, the present invention may communicate the video portion of a presentation to a user site via the Internet (more generally, via any TCP/IP network) while a corresponding audio portion may be communicated to the user site via a conventional telephony network and a conventional telephone at the user site. However, other embodiments are also within the scope of the present invention. For example, both the video and audio portions of the presentation may be provided solely by a TCP/IP network such as the Internet, assuming that there is sufficient communication bandwidth to synchronize presentation transmissions to the presentation members.

The present invention distributes a presentation (synonymously also denoted a "show") to presentation members by a novel distribution of presentation materials among network server nodes of a TCP/IP network (hereinafter assumed to be the Internet for simplicity). That is, due to the typically "bursty" nature of transmissions between nodes of such a network, a version of the presentation may be accessed synchronously from different network server nodes, or different versions of the presentation may be accessed synchronously from one or more of the network server nodes. Thus, in one embodiment, the present invention provides for a plurality of at least one of:

(2.1) One or more network server nodes (each hereinafter also denoted synonymously as a "network server," "content webserver", "content supplying node", and "supplying node"), whereby audience members receive presentation materials; and/or

(2.2) Different versions of the same presentation, accessible from the one or more of the content webservers, wherein each version may be for a different group of audience members such as a group for Japanese speaking audience members, or audience members affiliated with a particular organization.

Note that each of the one or more presentation versions includes one or more presentation segments (hereinafter also denoted simply "segments") that provide different portions of the presentation. More precisely, subcollections each having one or more segments are provided as presentation "elements" in that each such subcollection is intended to be an indivisible portion of a presentation performance. Moreover, each version of a presentation typically has its subcollections of segments (i.e, presentation elements) ordered according to their presentation sequence. Moreover, substantially every segment (or subcollections thereof) in one version corresponds with a segment (or subcollections thereof) having the same presentation order, in each of the other versions. Thus, assuming corresponding segments (or subcollections thereof) in different versions have approximately the same presentation duration, any of the corresponding alternative segments (or subcollections thereof) from different versions can be presented as a replacement for another such corresponding segment (or subcollection) during the presentation. Thus, it is an aspect of the present invention to provide corresponding alternative segments (or subcollections thereof) having substantially different network transmission requirements so that such corresponding alternative segments (or subcollections thereof) can be substituted for one another depending on the performance of the communications network. For example, the segments (subcollections) of a first version of a presentation may require a network transmission rate sufficient for real time or animated video and the segments for another version of the presentation may only require a transmission rate sufficient for graphic slides. Thus, of a set of corresponding segments (subcollections), one segment (subcollection) may merely

be an audio presentation via a telephone, whereas an alternative segment (subcollection) may be a multimedia presentation element that is a combination of one or more of the following types of HTML multimedia data: audio, images, animation or video, wherein such a multimedia element plays over a set period of time and can be as simple as a single image or as complex as a combination of images, audio, animation and video. Furthermore, segments may include interactive questions that audience members answer by, e.g., clicking on their display screens.

Note that it is also an aspect of the present invention that an ordering of predefined segments (or subcollections thereof) is capable of being presented and archived, and subsequently represented. Moreover, such an ordering can take into account alternative segments for the presentation. Thus, multiple sequentially-ordered scripts can be created so that the leader can choose to change scripts in the middle of a presentation based on user feedback. Accordingly, a presentation leader has the ability to stop presentation of a particular script and its current subcollection of segments and change to a different subcollection of segments to be delivered to the audience. Subsequently, the leader can then resume the initial script at any time.

Accordingly, to take advantage of this novel distribution of presentation materials, the present invention coordinates and controls computations and presentations at each client network node for each presentation audience member (hereinafter each such network node also may be synonymously denoted as a "client node," "user network node" or simply "user node") substantially simultaneously. In particular, one or more presentation controlling network connected nodes (each hereinafter also denoted a "host node") is provided for transmitting presentation controlling commands to the client nodes so that there is retrieval of the presentation segments from one or more versions of the one or more network content server nodes depending on, for example, performance characteristics of network transmissions. Thus, it is an aspect of the present invention to dynamically and adaptively switch between content webservers and/or versions of the presentation according to network transmission characteristics at each client network node so that the clients at the client nodes have presented to them simultaneously, synchronously and in real time, corresponding (in content) segments of the presentation. For example, a first client (at a first client node) may experience the presentation as an ordered series of presentation segments, wherein the first and second ordered segments are presented in full animation, wherein the first of the ordered segments is obtained from a first content webserver and the second segment of the ordered segments is obtained from a second content webserver. Moreover, synchronously with the presentation to the first client, a second client (at a second client node) may experience the presentation in a slide show format from a third content webserver, wherein the initial two segments presented are corresponding alternative segments to the first and second segments presented to the first client. Additionally, a third client may synchronously experience the first segment of the presentation via network transmissions from the first content webserver but subsequently experience the corresponding slide show alternative to the second segment from the third content webserver due to, for example, network transmission slowdowns.

It is a further aspect of the present invention to synchronously provide audio and video portions of the presentation through different communication channels (a communication channel being a physical signal transport path together with a particular signal protocol). For example, in one embodiment of the present invention (denoted hereinafter the "Telephony/Internet embodiment"), the audio portion of the presentation is communicated audibly directly to a standard telephone using conventional voice grade telephony transmissions, and the corresponding video portion of the presentation is transmitted via a different network such as the Internet (more generally referred to herein as a "communications network") using, e.g., a modem to interpret the transmission signals.

It is a further aspect of the present invention to provide the same audio presentation portion to each client, and in this manner, maintain the continuity of the presentation between clients. Thus, regardless of the version of the video presentation provided, the clients have their presentations synchronized by at least experiencing simultaneously the same audio presentation.

It is also an aspect of the present invention to allow presentation members to communicate with one another. For example, in the Telephony/Internet embodiment, a client may communicate with other presentation members (including the presentation leader) during the presentation via the phone and/or by Internet messaging.

In providing the above capabilities of the network presentation distribution system of the present invention, one or more of the previously mentioned presentation controlling network nodes ("host nodes") are utilized, wherein these nodes direct the flow of the presentation data between the presentation members. For example, in the Telephony/Internet embodiment, such a host node, upon receiving the presentation instructions from a presentation leader indicating the next presentation segment(s) to be presented, transmits Internet presentation control signals to each of the client nodes identifying the next collection of corresponding versions of video segments from which each client node is to select a video segment for presenting. Additionally, the host node coordinates any accompanying audio portion for this segment so that the timing for the presentation of these audio and video portions of the segment(s) are synchronized.

Moreover, during a presentation a host node provides a leader of the presentation with the ability to establish and control audience member involvement in the presentation. In particular, in the Telephony/Internet embodiment, this aspect of the invention is provided by the leader controlling the functionality of one or more phone bridges through which all the audio communication during the presentation may be routed. Accordingly, at any point the leader can speak into a microphone and broadcast his/her live voice to the audience members through the phone bridge(s). This live voice audio is automatically mixed with any segment audio concurrently being provided by the phone bridge(s). The leader can control the volume of the segment audio routed through the phone bridge(s) via controls at a leader control station (or simply "leader station"). When enabled by one of the phone bridges, the leader can also control the relative volume of his/her microphone. Otherwise the audio presentation portion routed through the phone bridge(s) is balanced by the automatic gain control on the phone bridge(s).

It is also an aspect of the present invention that any audience member can "request the microphone," from the leader to speak to the presentation audience. Accordingly, the leader has the ability to allow an audience member to speak to the entire audience. The leader can, of course, also choose to stop such audience participation at any time. Thus, the presentation leader may enable and disable audience member involvement during the presentation.

It is also an aspect of the present invention that whenever an on-screen question is answered by audience members, the results are automatically collected and can be graphed. The leader can choose to display the graphical results to all of the audience members. An audience profile database may be created with the data obtained from each audience member. Note that the audience profile database is maintained beyond any one presentation if such is desired.

It is yet another aspect of the present invention that in parallel with all of the other types of interactions between presentation members, text messaging between the leader and any or all of the audience members is done through a messaging window. Further, audience members can send private messages to the leader as well as each other. These messages can be read during the presentation without interrupting the flow of the presentation.

In another embodiment of the present invention, note that both the video and audio portions for a presentation may be provided by the Internet. Moreover, the present embodiment and the Telephony/Internet embodiment discussed above may be intermixed during a presentation so that some clients may receive the entire presentation via the Internet (more generally, via a communications network having physical transport and protocol(s) for supporting multimedia presentations) whereas other clients may receive the audio portion of the presentation via telephony transmissions of conventional voice communication through a telephone handset.

Thus, audience members may simultaneously receive a coordinated sequence of multimedia data controlled by the leader to be displayed, e.g., by an Internet browser such as Netscape Navigator or Microsoft Internet Explorer. Moreover, the present invention supports standard media types, e.g., GIF animation, as well as plug-in components such as Java and Shockwave for presenting the data (audio, graphic images, animation and video) in real time at an audience member's browser. Furthermore, several variations of presentation content can be delivered based on, e.g., the current bandwidth available and the client's affiliated network server(s).

Accordingly, the following advantages are provided by the present invention.

(3.1) Allocated Bandwidth for Server Data Availability:

The present invention allows the leader to selectively organize the number of audience members drawing data from a particular communications network server. By limiting the number of audience members on such a server to no more than 75, and controlling the presentation services provided to audience members, presentation related data availability is enhanced for audience members.

(3.2) Enhanced Reliability Through Distributed Components:

The present invention supports presentation content being distributed to any number of communications network (web) servers for enhanced reliability. Thus, if one of these network servers becomes inaccessible during a presentation, the present invention utilizes a notion of "virtual servers" (i.e., a collection of a number of communications network servers from which presentation data can be selectively transmitted) for determining an alternative communications network server. Accordingly, this allows the clients (audience members) using the affected communications network server to be switched to another network server in the virtual server collection during the presentation.

(3.3) Evens out "Bursting" of Data by Distributing Its Delivery:

Although each segment of a presentation is treated as a unique (multi)media element, the present invention is capable of delivering an entire collection of presentation segments to a client node while the presentation is being performed. This enables a more smooth flow of data during the presentation even though the segments may be transferred to client nodes in bursts.

(3.4) Monitors Transmission Bandwidth and Alternate Data:

Even with enhanced presentation data availability and distributed communications network (e.g. web) servers, there is still the possibility of data delays from a slow network server of a saturated communications network (e.g., Internet) service provider. Accordingly, the present invention monitors: (a) characteristics of network transmissions of presentation materials to client nodes, e.g., the transmission network bandwidth (e.g., the data transmission rate), and (b) the amount of data cached on each client's node. Thus, when the data required for a segment is not timely cached prior to its intended performance at a client's node, alternate segment data is automatically requested from the communications network by the client node. In particular, the client node may request the segment data from an alternate communications network server through network address (URL) selection of the alternate communications network server.

(3.5) Allows Presentation Participants to Reconnect and Synchronize with a Presentation in Progress:

If a presentation participant is disconnected from the communications network (e.g., Internet) during a presentation, there is a simple reconnect option to put the participant back in the presentation synchronized with the rest of the participants. Note that since the audio portion may be provided via a separate telephony (voice communication) network, it is likely that the disconnected participant is able to maintain the continuity of the presentation.

(3.6) Utilizes Controlled Client Requests:

For a given presentation, the present invention directs each client node to request presentation content from a given set of communications network servers rather than having such servers push presentation content to the client node. Among other advantages, this enables dynamic control of the pace of the presentation by a presentation leader while each client node selects specific display materials to attain that pace. Moreover, this strategy of requesting presentation content is typically not blocked by network firewalls such as are common in communicating with secure corporate intranets.

(3.7) Allows a Presentation to be Provided in Several Languages Simultaneously:

The present invention's distributed network processing architecture makes it possible to present concurrently a presentation with content provided in natural languages specific to the audience members. For example, for the same presentation performance, different audience members may have the audio portion of the presentation presented in different languages, e.g., English and Japanese. Moreover, the video content (e.g., on HTML pages) can be specified so that written text provided in the presentation can be displayed in different natural languages, depending on audience member preference.

(3.8) Cooperates with Firewalls:

The present invention allows confidential presentation data to be kept within a corporate intranet behind a

firewall (i.e., a network security feature that restricts communications with devices not included in the intranet, and in particular, that restricts the access to data stored within the intranet). Thus, the present invention allows a show or presentation to be controlled externally from the firewall, while at least the confidential data remains within the firewall and is presented to only those within the firewall under the direction of a leader that is potentially outside the firewall. Further, because the present invention employs a "client-request" technology, where each presentation member's browser requests information from a communications network server, typically data transmissions in response to such requests are not blocked by most firewalls.

Other features and benefits of the invention will become apparent from the detailed description and the accompanying figures herein.

BRIEF DESCRIPTION OF THE DRAWINGS

FIGS. **1**A and **1**B re a block diagram showing the functional components of the present invention such as the Internet;

FIGS. **2**A–**2**D present a flowchart of the steps performed (by the embodiment of FIGS. **1**A and **2**B) for presenting a multimedia presentation to a plurality of clients, each at a different client node.

FIG. **3** is an illustration of a presentation script for the present invention.

DETAILED DESCRIPTION OF THE PREFERRED EMBODIMENT

In FIG. **1**, a block diagram illustrating the components of the presentation system **50** of the present invention is provided, wherein solid arrows denote presentation data flows and dashed arrows denote control data flows. Note that the presentation system **50** utilizes the following high-level components:

(4.1) Client Sites **54**: Client sites **54**, where audience members receive a presentation. Typically, at least some of the client sites **54** are sufficiently geographically dispersed so that a face-to-face presentation is not possible. Additionally, note that each client site **54** has at least one of a client node **56** (e.g., a personal computer), and a telephone **62**, wherein the client node **56** may receive video (and possibly audio as well) information from a communications network **70** such as the Internet, and the phone **62** may be used for receiving an audio portion of the presentation routed separately through one or more voice grade telephony networks (collectively labeled **74**). Accordingly, if the client node **56** is resident at a client site **54**, then a network interface software package is required for receiving, e.g., video presentation information from the communications network **70** (e.g., including the Internet). For many networks (such as those including the Internet), this software package includes a network browser **78** such as the Internet browsers offered by Microsoft and Netscape, together with a client presentation software system **88** that coordinates with the browser **78** for requesting, receiving and displaying presentation segments (from the network **70**) as appropriate during the presentation.

(4.2) Leader Stations **92**: One or more presentation leader stations **92** that provide the leader(s) of a presentation with the ability to control the content of the presentation, the pace of the presentation, and any interactive communication with and between presentation audience members. Note that each leader station **92** includes the client presentation software **88** and a network browser **78** so that each leader can also view the presentation as it is perceived by audience members. Additionally, the leader station(s) **92** also have leader-specific presentation application software **94** for allowing a leader to control and direct a presentation.

Note that each leader station **92** is connected to components of the operations center **58** either through the communications network **70**, or directly using a **28**.**8** kilobits per second or ISDN **128** kilobit dial-up phone connection. The operations center **58** amplifies a presentation leader's scope of control using Internet Standard protocols (e.g., TCP/IP, FTP, etc.) to simultaneously transmit commands to a large group of clients. There may be one or more leader stations **92** per presentation performance. The leader tasks can be divided among a plurality of leader stations **92** to create, e.g., moderator, presenter, and show-control leader stations. These leader stations **92** may be co-located or geographically dispersed.

(4.3) Operations Center **58**: An operations center **58** for coordinating, at least at a high level, presentation start-up and presentation communication under the direction of a presentation leader at a leader station **92**.

(4.4) Content Webservers **96**: One or more content network server sites **96** (also denoted content webservers **96***a*, and alternate content webservers **96***b*) for providing presentation data to client sites **54** requesting such data via client nodes **56**. Note that for the client sites **54** illustrated, the content webservers **96***a* represent the presentation information suppliers of first choice. However, if difficulties (or expected difficulties) are encountered at one of the client sites **54** regarding receiving presentation segments prior to their time for display, then the client presentation software **88** at the client site is capable of requesting, via the browser **78** at the client site, presentation segments from an alternate content webserver **96***b* prior to or during the presentation.

(4.5) Phone Bridge **100**: One or more phone bridges **100** for supporting voice communication during a presentation is provided. The phone bridges **100** route the audio portion of a presentation to certain client sites **54**, thereby providing communications between the leader(s) and the audience members, and also providing communication between the audience members themselves.

Each phone bridge **100** receives its commands via a direct dial up phone connection from a phone bridge control **240** (discussed hereinbelow). The present invention may utilize a variety of phone bridges **100** to deliver audio and collect responses (e.g., voting by audience members on presentation presented issues). Note that each phone bridge **100** is enabled either directly through an application program interface (API), or by simulating a remote operator for the phone bridge. Some embodiments of the present invention utilize the following features provided by the phone bridges: an interactive mode, an audio only mode, call-back mode, and sub-conferencing (virtual conference table) mode, wherein these terms may be defined respectively, as: the leader and audience members are able to speak simultaneously to all presentation participants (interactive mode), the leader speaks to all audience members while all audience member phones have muted microphones (audio only mode), the phone bridge calls audience members (using a phone number

provided via presentation registration and/or a connection with the client presentation software **88** at the client's client node) for connecting for the audio portion of the presentation (via, e.g., the public switched telephone network) (call-back mode), subgroups of the audience and/or leaders are in the interactive mode with each other while in audio mode for the presentation performance (virtual conference table).

In cases where the presentation audience is mixed, with some members participating via teleconferencing or video conferencing and others viewing the presentation, voting for those who do not have an interactive network **70** connection can be accomplished with phone **62** pulse responses to one of the phone bridges **100**. In particular, these votes can be transferred to the operations center **58**, and (as with any audience member responses) optionally transferred to the profile database **120** described hereinbelow. Note that at the leader's discretion, a phone bridge **100** can be used to implement a help desk, wherein audience members requesting help before or during a presentation can be connected with a help desk operator for technical or customer support. The phone bridges **100** can also be used by the leader to implement subconference chat groups for localized question and answer sessions following a presentation performance.

(4.6) Content Manager **104**: A content manager system **104** for managing presentation scripts and data. The content manager **104** logs and confirms the locations and addresses of content webservers **96** where the content for each presentation will reside. The content manager **104** distributes presentation data, such as scripting information for a presentation, thereby providing:

(a) initial groupings of audience members according to, e.g., natural language preferred, organizational affiliation, geographical location, and/or intervening network connections and devices (e.g., firewalls and other security features, local area network connections), and/or

(b) sequencing of presentation segments to the operations center **58** (and more particularly, the host(s) **200** described hereinbelow).

Additionally, the content manager **104** distributes presentation content (e.g., presentation segments) to the content webservers **96** and verifies that the content is capable of being presented to audience members immediately before a presentation time. Note that the verification process makes sure that all the links in the presentation or show can be resolved appropriately. Finally, at the end of a presentation performance, the content manager **104** may remove the presentation content from one or more of the content webservers **96**.

Further note that the content manager **104** includes a reservation system **108** for maintaining a schedule for presentation and for reserving resources of the operations center **58**, and any presentation leader support such as leader stations **92**. The content manager **104** also includes an invitation subsystem **112** that is capable of maintaining invitation lists of candidate audience members, together with corresponding addresses (e.g., e-mail addresses) for various presentation performances. Additionally, the invitation subsystem **112** is capable of accessing client profile information for past audience members residing in the profile database **120**. Accordingly, by comparing client profile information in the profile database **120** with the information in various invitation lists, and/or presentation descriptions (e.g., keywords, etc.), prospective audience members for a particular presentation can be notified of future similar presentations via, e.g., e-mail.

Additionally, the content manager **104** is also responsible for accessing and maintaining a show content archival database **126**. Thus, following a live presentation performance using the present invention, the content manager **104** is capable of downloading the presentation content from the various content webservers **96** as well as presentation information retained in the operations center **58** into the show content archival database **126** for storage and/or possible replay. Note that the audio portion of a presentation is stored as a single continuous recording made by one of the phone bridges **100** during the presentation. Further note that the presentations stored in the show content archival database **126** are capable of being transmitted to various network **70** sites for subsequently time-delay delivery if desired.

(4.7) Software Download and Client Support System **130**: The present invention includes a software download and client support system **130** for providing presentation enabling software (e.g. client presentation software **88**) to both client sites **54** and leader stations **92**. Additionally, the software download and client support system **130** supplies presentation software to the leader stations **92** that allows leaders to control and direct their presentation performances. Finally, the system **130** provides client support via, e.g., the telephony network **74**.

(4.8) Pre-show Control System **136**: A pre-show control system **136** for providing audience members and potential audience members with presentation related information both for registering for presentation performances and for establishing initial network (**70** and/or **74**) connections immediately prior to a presentation performance, so that presentation content can be provided to each audience member's client site **54**. Thus, the pre-show control **136** provides audience members and prospective audience members with presentation booking information such as presentation topics, presentation performance dates, times, identification of leaders and/or lists of participants. Further, the pre-show control **136** also provides presentation content and script information to the operations center **58**. Within the pre-show control subsystem **136**, there is a registration module **140** and an associated network interface (not shown.), wherein audience members confirm their registration for a presentation performance, via, for example, network **70**. Note that confirmation of presentation performance registration includes, if necessary, a download of presentation specific software that provides a client with an icon on the client's client node **56** as a reminder of the scheduled presentation performance date and time for which the client has registered. Further, if the presentation for which the client has registered requires one or more software audio or video software systems, then the downloaded application software checks for these systems on the client's client node **56** and subsequently advises the client if one or more of the software systems required must be downloaded prior to the presentation performance.

Further note that the presentation application software downloaded to a client node **56** from the registration module **140** may be used for: configuring the client node **56** appropriately for the subsequent presentation performance, running tests at the client node for assuring that the presentation will be presented properly, allowing the client node to pre-load certain content

portions of a presentation, and/or providing the client with access to the lobby system **144** (discussed hereinbelow) for establishing initial network (**70** and/or **74**) connection(s) immediately prior to a presentation performance.

Note that the software application downloaded from the registration module **140**, in one embodiment, also allows a client to preview highlighted web pages of the upcoming presentation. Moreover, this software may allow the client to reconfigure and re-test his/her client node **56** for determining whether a desired configuration has been provided for a presentation performance.

Regarding the lobby system **144** also contained in the pre-show control **136**, the lobby system provides the initial connection point(s) for the audience members immediately prior to a presentation performance for which the audience members have registered. Accordingly, once network **70** and/or **74** connections have been established, the lobby system **144** connections are transferred to the operations centers **58** at commencement of the presentation performance.

(4.9) Accounting System **150**: In one embodiment, an accounting system **150** is provided for the present invention for managing its financial operations. In particular, the accounting system **150** includes a billing system **154** for maintaining a chart of accounts for both billing clients (and/or their affiliated organizations) having received a presentation, and billing presentation leaders (and/or their affiliated organizations) requesting the services of the present invention for distributing performances of their presentations.

Additionally, the accounting system **150** also includes a reporting subsystem **158** that outputs reports related to presentation performances, to clients and presentation leaders.

Referring now to the operations center **58**, a high level internal structure of this component will now be described. This component includes one or more host modules **200** for coordinating: (a) the dissemination and timing of presentation content under the direction of a presentation leader(s), (b) the interactions between the leader(s) and the audience members as well as between members of the audience themselves, (c) the gathering of feedback information from audience members according to, for example, answers to questions posed to the audience members during a presentation performance, and (d) providing results from audience participatory responses to the leader(s) and/or audience members. Accordingly, note that in one embodiment of the present invention, the computer on which a host **200** is resident has the following features: **64** megabytes of RAM, **166** MHz Pentium processor, NT operating system, Ethernet network card, in a configurable CUBIX backplane available through CUBIX, Inc., 2800 Lockheed Way, Carson City, Nev.

Each such host **200** is capable of managing one hundred or more interactions with clients and/or subordinate hosts **210** wherein the subordinate hosts are distributed on the network **70** to thereby increase an operation center host's span of control by **100** or more clients and/or further subordinate hosts per subordinate host to create an unlimited audience. Note that each host **200** receives presentation script information from the content manager **104** in preparation for initiating the performance of a presentation Further, each host **200** receives from the lobby system **144** audience member identifications for each presentation performance controlled by the host immediately prior to the performance of the presentation. Note that each such audience member identification typically includes: (a) a unique six digit client identifier which is encoded into the client presentation software **88** for each presentation performance client, and (b) a three digit group identifier for assigning one or more webservers **96** to provide presentation content. Note that the software download and client support system **130** encodes these two identifiers into the client presentation software **88** prior to distribution to client nodes **56**.

The host **200** also receives content webserver **96** identifications, and presentation script identifications from a show scheduler **204**. This scheduler **204** provides the functionality of the present invention for scheduling presentation performance times and the resources needed for performing each presentation. Thus, the show scheduler **204** provides the pre-show control **136** with scheduled show times and dates, and, as mentioned above, provides a host **200** responsible for a presentation with content webserver **96** identifications and presentation script identifications immediately prior to the performance of the corresponding presentation. Note that in the embodiment of FIG. **1**, the show scheduler **204** may be utilized to reserve resources at various content website servers **96** as well as phone bridges **100** in addition to other resources of the operations center **58**. Note also that the show scheduler **204** provides show schedule data to a security system **208**, this latter system described hereinbelow. However, in other embodiments of the show scheduler **204**, resources may be allocated for a presentation according to the number and geographical locations of clients desiring to participate in a particular presentation.

For each presentation performance, the presentation controlling host **200** also receives, from a presentation performance specific resource file or data base **212**: (a) content webserver **96** network addresses (e.g., for the Internet, these addresses being URLs) identifying the network **70** sites having presentation content data; (b) audience member lists of clients that have registered for the presentation performance and can therefore become audience members, if they choose to; (c) groupings of registered clients; and (d) script names and locations from which to retrieve the presentation script from the content manager **104**. Accordingly, note that the records of the corresponding resource file **212** associate presentation identifiers with content webserver **96** URLs and path names on these webservers where presentation content data resides. Thus, since the presentation scripts received by the hosts **200** from the content manager **104** are generic in that the scripts have variables or placeholders for content webserver **96** identities, each host **200** uses information from the corresponding resource file **212** (retrieved according to presentation identification) for resolving the undefined content webserver variables of the generic scripts, and thereby instantiating presentation scripts and presentation data with specific content webserver **96** references. Note that the resource file **212** may be created from information in a scheduling data base (not shown) populated with, e.g., content webserver **96** groupings (each grouping for supplying presentation content to a particular group of audience members) and audience member group identifications. The grouping of the webservers and the audience member groupings are both indicated by the three digit group identifier also encoded into each copy of the client presentation software **88** distributed by the software download and client support system **130** as previously discussed.

Each host **200** also sends commands to an audio system **220** for controlling presentation audio content that has been previously recorded for performance of the presentation to which the audio content is associated. In particular, a host **200** controlling a particular presentation sends audio pre-

sentation coordinating commands that direct and control the audio system **220**. The audio client **224** provides the following functionality in response to host commands. The audio client **224** may (a) utilize a plurality of specialized audio players **236** depending on the audio compression of the audio portion of a presentation to be provided to the client sites **54** via the phone bridge **100**, and/or via the network **70** in an alternative embodiment, (b) establish a connection to the audio server **228** at a specified network **70** location (note that in one embodiment the audio server may be accessible as an addressable node on the network **70**), and (c) start, pause, resume, position within, and stop an audio playback with an identified audio file or stream. Note that in performing the functionality described above, the audio client **224** may receive the following types of commands from a host **200**: a network **70** node address (URL) containing the location and the name of an audio file or stream, and the current state wherein the possible states are: playing at a particular position, paused, or stopped.

The audio client **224** controls at least two other modules of the audio system **220**, in particular, the audio server **228** and the audio player **236**. For a presentation to be performed, the audio server **228** is preloaded with audio presentation data by the content manager **104** prior to the performance of the presentation. The audio server **228**, in turn, supplies the audio portion of selected presentation segments to the audio player **236** as directed by the audio client **224**. Accordingly, the audio player **236** prepares the audio information for output to one or more of the phone bridges **100**. More particularly, the audio player **236** performs the following functions: (a) receives audio IP from the audio server **228**, (b) buffers IP packets received from the audio server, (c) decodes compressed audio data from IP audio packet, (d) controls an audio device (computer card) to create analog, line level, or direct public switched telephone network (PSTN) output audio signals. Thus, at the request of the audio client **224**, the audio player **236** outputs audio segment information to an audio client **224** designated phone bridge (s) **100** for subsequent transmission to identified client sites **54**, thereby providing presentation audio to clients in real time during a presentation performance. Thus, the hosts **200** and the audio system **220** coordinate so that the pre-recorded audio portions of each presentation are delivered to the phone bridge(s) **100** and distributed to the client sites **54** in a coordinated manner with corresponding video and/or graphic presentation segments.

It is important to note that several variations of presentation content can be provided to clients based on the available bandwidth on network **70**, as well as adjunct networks of various kinds that coordinate with network **70** for transmitting presentation information to client sites **54**; e.g., such adjunct networks may be local area networks, virtual private networks, and corporate intranets. Further, note that the audio client **224** can direct the audio server **228** and the audio player **234** to supply corresponding pre-recorded audio versions of presentation segments in different languages. Accordingly, the audio player may simultaneously output to one or more of the phone bridges **100** a plurality of different audio versions of pre-recorded materials for a presentation that are in different languages.

Each host **200** also directs the operation of the one or more phone bridges **100** via a phone bridge control module **240**. The phone bridge control module **240** provides an interfacing control system between the host **200** and the phone bridges **100** so that details of particular phone bridge **100** control commands and details of operations of phone bridges **100** need not be embedded in host **200** system software. Accordingly, under the direction of commands from the host **200**, the phone bridge control module **240** is capable of directing one or more phone bridges **100** to provide the following types of audio transmissions during a presentation:

(5.1) Direct phone bridge(s) **100** to route various audio presentation portions to particular client site phones **62** as well as leader stations **92**;

(5.2) Establish appropriate telephony connections so that an audience member can address all presentation participants;

(5.3) Establish one or more audio subgroups from the collection of audience members of a presentation. In particular, for some types of presentations wherein periodic conferring among subgroups is deemed advantageous, such audio subgroups can be considered as a vehicle for providing subconferencing capabilities;

(5.4) Assuming that subconference groups of audience members are capable of being provided by the phone bridge(s) **100**, the phone bridge control **240** is able, if directed, to configure the phone bridge(s) for allowing a subconference group to address all audience members and subsequently return to conferring privately among the audience members of the subconference;

(5.5) Instruct the phone bridge(s) **100** to monitor telephone lines of audience members for input regarding answers to questions posed to audience members and whose responses are provided via the pressing of digits on phones **62** at client sites **54**;

(5.6) Enable full interactive audio to all audience members where each audience member is capable of speaking to other presentation performance participants.

(5.7) Place a single audience member or the entire audience into audio (listen only) mode without deactivating the audio presentation performance from the audio system **220**.

Each host **200** is also in communication with the security subsystem **208** referred to hereinabove. Note that all external communications from third parties to a host **200** is routed through the security subsystem **208**. This subsystem provides various kinds of communication security measures such as:

(6.1) A data packet filtering router (not shown) for filtering out network **70** communications from unknown network **70** sources;

(6.2) A communications protocol and port-specific firewall (not shown) for rejecting certain communications addressed to specific ports unless the communications are provided in a particular protocol such as HTTP, HTTPS, or FTP;

(6.3) An encryption tunnel (not shown) for encrypting communications to be transmitted on the network **70** (via the internal webservers **248** that interface with the network **70**), and for decrypting communications received from the network **70** (via the internal network servers);

(6.4) A validation subsystem (not shown) for validating participants requesting access to operations center **58** resources. Validations performed here includes validating presentation performance identifiers provided by client site **54** network **70** addresses, passwords provided by clients, and client presentation software **88** embedded identifiers; and

(6.5) Virus detection software.

Note that the security subsystem **208** resides on a separate computational device from that of the host **200**. Further, note that the security subsystem **208** may translate network **70** received communications into a proprietary protocol before

sending such communications to other components of the operations center **58**. Moreover, for network **70** communications intended for different operations center processes and/or related to different presentation performances, different levels of security may be implemented. Thus, network **70** communications for one presentation performance might include only minimal protection such as virus protection and protocol translation prior to transmitting communications to, e.g., the host(s) **200**, or to the internal webserver(s) **248**. Alternatively, at an opposite extreme, wherein high security is desired for a presentation, all of the features (6.1) through (6.5) may be performed for communications received form the network **70**, and at least encryption is performed for communications transmitted across network **70** to, e.g., client sites **54**.

The present invention also provides and/or facilitates further security features. For example, for corporations that want to guarantee the security of their data during network presentations, the distributed server architecture of the present invention allows for content webservers **96** to be placed within a secure corporate intranet **260**. More particularly, such content webservers **96** may be behind a firewall **264**, such that the firewall is between such content webservers and the presentation controlling host(s) **200**. Thus, proprietary corporate data may reside behind the firewall **264** while presentation control may be performed externally.

Additionally, data access security can vary according to the needs of the presentation participants and/or their affiliated organizations. Thus, at one extreme, there is substantially no data security for the presentation data. Accordingly, the data may be available to anyone who knows a content webserver's network **70** address. This security level is similar to publishing data by creating World Wide Web pages on web sites and, in fact, presentations performed using the present invention can use actual World Wide Web websites as a source for presentation data.

A simple physical security capability may be used by the present invention for protecting presentation data by controlling the time span for which the data is accessible to clients. This involves keeping the data inaccessible when a presentation is not being performed. For example, presentation data may be maintained on private content webservers **96** or in private directories until near show time, making such data available at show time, and removing the data after the presentation performance terminates. Various aspects of this time based data management capability are directed by the show scheduler **204** for the operations center **58** and the content manager **104**. In particular, the show scheduler **204** may keep presentation data residing within the operations center **58** inaccessible to other components of the operations center as well as to the pre-show control **136**. Additionally, the content manager **104** may prohibit access to presentation data on content webservers **96** by providing the data on the webservers substantially only during the presentation, and/or changing accessibility permissions on presentation data previously provided on the webservers so that it is substantially only available during a presentation performance.

For an intermediate level of physical security, presentation data can be located on operations center content webservers **96** (either internal to the operations center or external thereto) that require passwords, do not allow overwriting of data, and are not used for unsecured data. For high security, the intermediate security measures may be enhanced by recording each client's identity and/or network **70** address as they connect to a host **200**. Furthermore, the high security measures may only allow network **70** connections from pre-approved network addresses using a specified protocol and port number for the duration of a particular presentation for which the client is registered.

In addition to any physical security methods as discussed hereinabove, presentation data can be encrypted prior to network transfers in any manner which the clients' browsers **78** can (with plug-ins) decrypt. Assuming the network **70** is the Internet, the operations center servers **248** support common gateway interface (CGI) and Internet information server (IIS) extensions for processing URLs and a presentation can implement standard web data security by using Internet protocols such as file transfer protocol (FTP) with user identification plus password, and hypertext transport protocol secure (HTTP). Also note that the security measures for the present invention are not restricted to providing communications on generally used port numbers (e.g., communication between the host and leaders or audience members can occur on either port **60** or port **80** in any combination for a single presentation performance. Note that special security presentation performances can be run using any port number desired when using servers **248** in the operations center, or on intranets (e.g., the secure corporate intranet **260**). For dynamic data generated during a presentation (e.g., data collected from audience member responses), the HTTPS protocol is useful, even in an otherwise unsecured presentation, for transmitting questions, collecting response, and returning results through a secure sockets protocol. In particular, the HTTPS protocol provides an encryption method generally accepted as secure enough for transmission of sensitive financial data over public networks. Accordingly, this provides security for collected client information because the response data is transferred to a host **200** in an encrypted format. Furthermore, the presentation performance controlling host **200** protects the received data by not sharing it, and the host **200** does not support standard network **70** (Internet) data access protocols.

Additionally, note that the presentation controlling host **200** is secured separately from the presentation data security. In particular, each host **200** executes on a server within the operations center **58**, wherein the host will only accept a network **70** connection from a client node **56** having the appropriate version and/or identification for a presentation being controlled by the host. Moreover, the client and/or the client's presentation software **88** must be able to access the host **200** through its network **70** address and present the correct presentation identification at the time of the presentation performance.

Since the show scheduler **204** selects the host **200** from a plurality of such hosts and also selects the time window for each presentation performance, several other security measures may be implemented for a presentation performance including: restricted access to the client presentation software **88**, uniqueness of each presentation performance identification, encoding of the network **70** (Internet) address of the host for the presentation and scheduling the date and time of the presentation. Note that the show registration system **140** facilitates these security measures in the show scheduler **204** by providing encoded presentation invitation network addresses (URLs) to clients and/or their client nodes **56**. Further, addresses of clients for a particular presentation may be sent to each of the content servers **96** having data for the presentation. Thus, when such a content server **96** receives a presentation data request from a client node **56**, the client's address, the presentation identification, and the presentation performance schedule time may be validated at each content webserver **96** accessed.

The degree of security placed on presentation performance invitation distribution and the verification of invited presentation participants by each content webserver **96** is selected by a sponsor of the presentation. Note that the invitation system **112** does not have a direct data connection to the show scheduler **204**. Thus, accidental release of sufficient presentation performance information to allow unauthorized access to a presentation performance is unlikely.

Additionally, to provide for dual path information security (e.g., to and from the operations center **58**), the presentation software **88** can also require a password for activation, wherein the password is unique to the client and/or unique to a particular configuration of the client's client node **56** and wherein the password may be manually entered immediately prior to a presentation connection to a host **200**. Note that for presentations using data secured within a secure corporate intranet **260**, the client host connections can transmit encrypted network **70** addresses.

Since each host **200** does not have access to presentation resources (e.g., invited client lists, content webserver **96** addresses, presentation thumbnail images, sign-on passwords, phone bridge **100** type and presentation scripts) until the show scheduler **204** sends them to the host **200** with the presentation startup commands, or a leader for the presentation adds resources to an active presentation performance, it is remote that sensitive and/or proprietary presentation data can be accessed through a host **200**. Moreover, a sponsor can create and perform a presentation without the presentation content data ever residing at the operations center **58**. Further, in cases where interactive response data received during a presentation performance is considered extremely sensitive, the sponsor may process the client responses at sponsor controlled network sites and subsequently, if desired, forward statistical summaries to the presentation controlling host **200** for any desired distribution to audience members.

Regarding security and presentation leaders, the leader(s) of a presentation can be verified by use of one or more passwords in addition to the host **200** address, port number, presentation identification, and presentation performance time for his/her presentation performance. Note that such leader passwords may be unique to each presentation performance and may be supplied to the presentation controlling host **200** by the show scheduler **204** immediately prior to the start of a presentation performance for thereby validating presentation leader(s). Additional leader information may be also provided to enable multiple leaders for a single presentation performance and to also enable different presentation control functions to be allocated among leaders according to their presentation passwords.

The leader software **94** may be distributed to presentation leaders and/or leader stations **44** by diskette or by a network **70** download. This software may be generated with built-in addresses and presentation identification numbers as well as particular ports for connecting to the presentation controlling host **200**. Note that since presentation leaders have access to various resource usage, supply and change capabilities, additional security measures may be applied to leaders and the leader software **94**. In particular, for leaders connecting through the network **70** (Internet), an encryption tunnel (not shown) can be established on the leader host connection, wherein such an encryption tunnel provides encapsulation of a proprietary high security protocol within the IP protocol. Further, to provide secure, high reliability connections directly to a leader, the operations center **58** maintains several dial-in lines which may be used at 28.8 kilobits per second or ISDN rates (e.g., of up to 128 kilobits per second). Note that connections on such dial-in lines are also usable by presentation audience members at the leader's discretion if their client identifiers are available to the operations center **58** from the content manager **104** after the leader connection is accepted.

If the above described security features are utilized by the present invention, then it is able to deliver a presentation performance with any mixture of security levels between the two extremes of: (a) no security processing of transmitted audience member responses, show data content, or presentation data locations, and (b) full security processing with only invited audience members, securing all audience member responses, storing and protecting the presentation data content, and securing the connection between each leader or audience member and the presentation controlling host **200**. Furthermore, the security of the operations center **58** may be audited using hacker prevention tests and virus detection and prevention methods as one skilled in the art will understand.

FIGS. **2**A through **2**D represent a flowchart of the high level steps performed by the network presentation system **50** the present invention. In particular, this flowchart illustrates the high level steps performed for both initiating and operating a presentation for audience members at clients sites **54**. Accordingly, in step **404**, prior to the scheduled time of a presentation performance, the show scheduler **204** supplies the host **200** assigned for controlling the presentation with an identifier that uniquely identifies the presentation performance and provides with this identifier one or more passwords that can be used by the host **200** and/or the security subsystem **208** for identifying the leader(s) and clients that attempt to connect with the host **200** as presentation participants. Note that such connections to the host **200** will typically be through the security subsystem **208** and therefore be subject to various security measures discussed hereinabove to which the presentation and its participants are subject. Subsequently, in step **408**, the host **200** uses the presentation performance identifier to request the one or more scripts for the presentation from the content manager **104**. Note that the presentation scripts provide: (a) identification of segments to be presented during the presentation, (b) sequencing information regarding the order of presentation of the segments, (c) alternative versions of various segments and/or collections of segments that may be by the leader(s) of the presentation. Note that further description of presentation scripts and their representations are provided hereinbelow. Also note that the presentation performance identifier is used by the content manager **104** for retrieving the presentation script(s) from the show content archive **126** for thereby returning the presentation script(s) to the host **200**. In step **412**, each leader for the presentation logs onto the host **200** by supplying appropriate validation information such as a password and presentation performance identifier. Further, if there is more than one leader, then additional leader identifying information may be required for differentiating the roles of various leaders for the presentation.

In step **416**, the pre-show control system **136** accepts network **70** and/or network **74** connections by candidate clients for the presentation performance. Note that it is assumed that the clients have previously registered for the presentation performance with the registration module **140** and therefore have been provided with validation information (e.g. a presentation performance identifier and/or password) for validating each client as an audience member for the presentation. Subsequently, in step **420**, a determination is made by the pre-show control system **136** as to

whether each candidate presentation audience member is connected to the pre-show control system by the communications network **70** or by the telephony network **74**. If it is determined that a candidate presentation client is connected by the communications network **70**, then step **424** is performed, wherein the candidate client logs onto the pre-show control **136** with a previously provided login. Note that this login may include a presentation performance identifier for the presentation and a password for identifying the candidate client as being registered for the presentation performance. Further note that in one embodiment, this step is performed by the lobby system **144**. Subsequently, in step **428**, a determination is made by the pre-show control system **136** (or the lobby system **144**) as to whether the entered login is valid. If the login is determined to be invalid, then step **432** is performed wherein the connection with the pre-show control system **136** is terminated. Note however, it is within the scope of the present invention that various retries can be provided as one skilled in the art will understand. Alternatively, if the candidate client's login is determined to be valid, then step **436** is performed wherein the pre-show control (determines whether the client's client node **56** is configured appropriately for the presentation performance). In particular, the pre-show control system **136** determines whether the client presentation software **88** is operable on the client's client node **56**. Further, the pre-show control system **136** may also determine whether the client's client node **56** has the appropriate network **70** addresses (e.g. URLs) of the content webservers **96** available for supplying presentation segments to the client node.

Subsequently, assuming the client's client node **56** is appropriately configured for the presentation performance, in step **440**, the pre-show control system **136** transfers the client's client identifier and network **70** address to the host **200**. Following this step, in step **444**, when the time for the presentation arrives, the client's client presentation software **88** via the network **70** establishes a network **70** connection between the client's client node **56** and the host **200** controlling the presentation performance. Note that such activating may be performed during the client's login session with the pre-show control system **136** if such occurs within a few minutes of the start of the presentation. After the host **200** is contacted, it instructs the client presentation software **88** to establish a connection with one of the internal webservers **248** for dynamic content.

Additionally note that the lobby system **144** substantially provides the functionality for the present step (step **444**). In particular, the lobby system **144** may maintain the login session connection until the time for commencement of the presentation performance. Moreover, the lobby system **144** may provide the client with excerpts of other presentations as well as advertisements and/or other informative material.

Following the activation of a connection between the client node **56** and a presentation controlling host **200**, in step **448** the client presentation software **88** is instructed by the presentation controlling host **200** (hereinafter for simplicity referred to as the "host **200**") to retrieve and cache, via network **70**, one or more initial presentation segments from identified content webservers **96** where the presentation segments have been pre-stored. Note that the initial presentation segments (as well as subsequent presentation segments) may be different for clients at different client sites **54**. In particular, the segments provided may depend on network **70** transmission rates, client natural language preferences, unique organizational displays and/or data (corporate logos and/or confidential financial data), and configurations of client nodes **56** (e.g. the software and/or hardware).

Returning now to decision step **420**, if this step determines that the client's connection is via the telephony network **74**, then in step **450**, the pre-show control system **136** requests that the client enter an acoustic login via digits on the telephone **62** at the client's client site **54**. Note that clients that login through telephony network **74** may intend to participate in only the audio portion of a presentation performance. However, clients who login in this manner can subsequently log in to the pre-show control system **136** via a network **70** connection and obtain a multimedia performance of the presentation.

In step **452**, the pre-show control system **136** determines if the acoustic login is valid. If not, then in step **456** the call is terminated. Alternatively, if the login is deemed valid, then the pre-shown control system **136** determines the level of presentation to which the client has been assigned. In particular, the client may be assigned to an audio presentation or alternatively to a multimedia performance of the presentation. Thus, if the client has been assigned to obtain a multimedia presentation via the network **70**, then in step **464** the pre-show control system **136** automatically performs any necessary pre-show housekeeping tasks for thereby allowing a more expedient network **70** login by the client for obtaining the multimedia performance of the presentation. Note that in particular, any financial transactions prior to the presentation such as credit card number transfers and/or a change of the location of the client's site **54** may also be performed during the present step. Moreover, it is also an aspect of the present invention that speech recognition modules can be used for interpreting client input. Further, note that the tasks performed in step **464** may also be performed by registration module **140** during registration for the presentation, such registration potentially occurring substantially prior to the performance of the presentation. Additionally, regardless of the flow of control path taken from step **460**, step **468** is encountered wherein at the time to commence the presentation performance, the pre-show control system **136** requests that the host **200** transfer control of the client's telephony call so that it is controlled by the control bridge controller **240** for receiving the audio portion of the presentation performance. Subsequently, regardless of whether the client is to receive the presentation performance via network **70** and/or network **74**, step **472** is performed wherein the host **200**: (a) activates the leader software **94** on the leader station(s) **92** used in controlling the presentation performance; and (b) activates the client presentation software **88** at the leader station(s) **92** for viewing the presentation performance as an audience member will.

Subsequently, steps **474** and **476** are performed concurrently wherein each client having a client node **56** has its client presentation software **88** in a wait state waiting for a presentation command(s) from the host **200** via the network **70**, while in step **476**, the leader(s) for the presentation performance determines the first collection of corresponding presentation segments and transmits the identity of the selected collection to the host **200**. Note that there can be more than one version of the presentation from which the leader can select segments for presenting to the audience members. Further, note that of the versions being selected, the present invention may automatically select subversions to be provided to various audience members depending upon, e.g., data rate transmissions by the network **70** from content webservers **96**. However, it is also an aspect of the present invention that the leader(s) may override the automatic selection of subversions of a presentation performance and/or mandate that a particular subversion be provided to various audience members. In particular, this can be accom-

plished by: providing only one rendition of source material such as a high resolution corporate logo and leaving all alternate resource fields of the script blank and providing only one "level" of scripted resources for that presentation collection, as will be discussed in further detail hereinbelow with reference to FIG. **3**.

In step **480**, if the leader station **92** providing the identity of the presentation segments is external to the operations center **58**, then the security subsystem **208** checks the leader input for validity via, e.g., determining the network **70** address from which the identity of the selected presentation segments have been transmitted. Assuming that the transmission from the leader station **92** is deemed valid, in step **490**, a determination is made as to whether the leader(s) has determined a next collection of one or more segments whose identities have been supplied to the host **200**. In particular, the leader(s) may choose to identify such segments to the host **200**, or indicate that the performance of the presentation to be terminated. Accordingly, if no other segments are determined and/or the leader(s) indicated presentation performance termination, then step **494** is performed wherein the presentation software **88** is removed from client nodes **56**.

Alternatively, if an additional collection of segments is determined, then in step **500**, the host **200** accesses the presentation script(s) with the leader supplied identifications for the segment collection, thereby obtaining additional data items regarding the segments of the collection as will be further described hereinbelow.

Subsequently, in step **504**, the host **200** accesses the resource file **212** for resolving virtual webserver names in the accessed segment collection for thereby providing actual content webserver network **70** addresses having at least the video versions of the presentation. Additionally, note that it is within the scope of the present invention that resource file **212** can also be accessed for resolving identifiers and thereby identifying a corresponding audio portion to be presented to audience members via the audio system **220** and the phone bridge(s) **100**.

Following step **504**, in step **508**, the host **200** sends one or more commands to each copy of the client presentation software **88** indicating both the next collection of segments to be retrieved by the client nodes and the network **70** addresses of the primary and alternate webservers **96** from which to retrieve the segment collection.

It is important to note that the host may send substantially simultaneously a different set of commands to different client sites **56** depending on the characteristics desired for the presentation at each client site.

Since processing according to the present invention occurs at a presentation host controller **200** and simultaneously at client nodes **56**, during the processing steps **476** through **508** performed remotely from the client nodes **56**, the client nodes as per step **474**, may be prepared for accepting the next presentation commands transmitted by the host **200** in step **508**. However, such host nodes **56** may be also concurrently providing various portions of the presentation performance to their respective audience members. In any event, when step **516** is encountered, the client nodes **56** have received the next host **200** transmitted commands and therefore the client nodes now enter a processing state whereby these nodes attempt to assure a timely caching of this next collection of segments for timely performance of their portion of the presentation.

In step **516**, a determination is made by the client presentation software **88** at each client node **56** upon which the software is loaded, as to whether the next collection of segments indicated by the one or more commands transmitted by the presentation controlling host are presently cached on the client's client node **56**. Note that this next collection of segments could have been previously cached at a client node **56** due to: directory cache commands for caching an entire file directory that was issued earlier in the presentation performance, provided by fixed media such as CD-ROM at the client nodes(s) **56**, or re-use of presentation segments such as HTML page formats, background images, or logos.

Accordingly, if the next collection of segments is not cached on a client node **56**, then step **524** is performed wherein the client presentation software **88** on the client node **56** uses its most recent network **70** data transmission characteristics together with the host **200** transmitted list of current network **70** addresses for content webservers **96** to select an appropriate content webserver and an appropriate version of the next collection of segments to be retrieved. Note that the selections determined in this step are performed with the goal of assuring that there is a high probability of this next collection of segments being delivered to the client node **56** prior to the time that this collection is to be used in the presentation performance on the client node. In particular, the following is a description of the steps performed in determining, from the network **70** data transmission characteristics, the content webserver **96** and the (sub) version of the next collection of segments to be retrieved. The selection of the webserver may be dependent upon the time allotted for the transfer and the network **70** transmission characteristics such as data transmission rate. The time for each network **70** transfer of a collection of segments (e.g., one or more presentation elements, each such element having one or more segments therein) is controlled by the host **200**. The host **200** designates time according to at least one of the following categories: (a) no time, wherein the presentation element(s) is to be displayed immediately, (b) indefinite, wherein the amount of time for transfer of the presentation element(s) is indefinite, and (c) a specific time interval indicated in a script command for the presentation, e.g., a "virtual time" command as indicated by commands (rows) of the script shown in FIG. **3** having values in the **620** column as will be discussed hereinbelow. Note that as the expected amount of time for retrieving one or more presentation elements lengthens, larger groups of presentation elements may be retrieved and/or better presentation quality presentation elements may be retrieved (e.g., the presentation quality may be enhanced from limited or no animation to full animation).

Additionally, the presentation element(s) selected is dependent upon network protocols such as HTTP and FTP. For example, as the size of the presentation data and the time for retrieval increases, the present invention tends to utilize FTP for network **70** transport. Alternatively, as the size of the presentation data and the time for retrieval decreases, the present invention tends to use HTTP.

Accordingly, in one embodiment of step **524**, the size of each candidate collection of one or more presentation elements is determined from the webservers **96** by, e.g., requesting such sizes. As an aside, note that an indication of the bandwidth available with each such webserver can be determined if not available otherwise. Thus, if there is a primary webserver **96***a* and an alternative webserver **96***b*, and each has presentation versions for both HTTP and FTP as well as both having animated and non-animated interchangeable presentation elements, then an expected time for retrieving each available combination is determined. Subsequently, the candidate collection selected provides first, the highest quality presentation, and second, the largest

amount of presentation data possible. Consequently, the expected times are used to select the webservers **96**, the collection of presentation elements, and the transfer protocol to use in providing the selected collection to the client node **56**.

In one embodiment, the following selection process is used to determine the expected times:

for each candidate collection of presentation elements:

(a) The size of the collection is determined.

(b) The size is divided by the bandwidth average for the last two minutes as measured from any network **70** transmission source. If the average bandwidth is not available, then a bandwidth from the most recent webserver is used.

(c) A protocol overhead factor is added to the result of (b) to account for the different overheads for each of the different protocols available on network **70** that may be used (e.g., FTP and HTTP).

(d) Select the highest quality collection of presentation elements available, and select the largest collection that can be transferred in the time available. Note that it is assumed that an indefinite time designation by the host **200** is viewed as time sufficient for any size of transfer.

It is worthwhile to note that in other embodiments of the present invention, additional network characteristics other than bandwidth may be used, as one skilled in the art will understand. In particular, such characteristics as network **70** error rates, fluctuations in bandwidth, or a predictive statistical expectation of bandwidth may be used. Additionally, note that such candidate collections of presentation elements can also be resident at the client node **56** since some portions of a presentation can be also distributed on CD-ROMs. Accordingly, step **524** of FIG. **2**C (as well as other steps in the flowchart of FIG. **2**) also may access a CD-ROM drive or other transportable storage media for various portions of a presentation. Also, it is noteworthy that if network **70** supports multicasting, then a plurality of client nodes **56** may have their presentation elements selected according to a single access rate (i.e., server data propagation to the network) and a single network transmission rate instead of performing individual presentation element selections.

Subsequently, in step **528**, the client node **56** provides the identity of the selected webserver and next collection of segments to the client node's browser **78** and the browser, in turn, sends a network **70** request to the selected web server for the selected (subversion) of segments. Following this step, the client presentation software **88** monitors the time elapsed before transmission of the selected collection of segments is completed, and determines whether these segments are provided within an appropriate window of time that allows them to be presented during the performance of the presentation. Thus, in step **532**, the client presentation software **88** determines whether the requested collection of segments is cached on the client node **56** within a desired time prior to the proposed performance of the collection of segments. In particular, for determining this desired time, a function dependent on one or more of: (a) various measurements related to one or more other client nodes **56** receiving the presentation performance, (b) a predetermined default length of time, as e.g., specified in the presentation script, and (c) a length of time determined by a leader of the presentation performance, e.g., during the performance. Regarding (a) above, note that measurements such as:

(7.1) network **70** transmission rates for each of one or more previous requests for presentation segments;

(7.2) for each of one or more previous requests for presentation segments, an elapsed length of time between the request time for the presentation segments and receipt of the segments;

(7.3) for each of one or more previous requests for presentation segments, a size (e.g., in bits) of the segments received from the request.

Note that there are various functions dependent on one or more of (a)–(c) immediately above that may be used as one skilled in the art will understand. Further note that such function may be as simple as a comparison of corresponding network **70** transmission rates between (a) the client node **56** and the webserver(s) with which it is communicating, and (b) other client nodes **56** and the webserver(s) with which they are communicating. Alternatively, such a comparison may be performed on the elapsed time as in (7.2). Note that there are at least two possible alternatives here:

(8.1) the present invention may attempt to retrieve the same collection of segments from an alternative content webserver;

(8.2) the present invention may attempt to retrieve an alternative collection of segments that can be used as a replacement for the initially requested segment collection from either the same webserver **96** for which the original request was directed, or from an alternative webserver **96**.

Accordingly, if the collection of segments is not cached within this time, then step **536** is performed wherein the client presentation software **88** determines if there is sufficient time to retry obtaining the collection of segments or another collection of alternative segments prior to the time of their estimated performance.

If in step **536** it is determined that there is insufficient time remaining, then step **474** is again activated, wherein the client node **56** (and more particularly, the client presentation software **88**) prepares for the next set of one or more presentation commands from the host **200**. Note, however, that even though the portion of the presentation corresponding to the collection of segments are not retrieved in time for performance, it is an aspect of the present invention that if the audio portion of the presentation is provided through the separate telephony network **74**, then there may be substantial continuity in the presentation regardless of whether a portion of the video for the presentation is displayed or not.

Alternatively, if in step **536** the client presentation software **88** determines that there is sufficient time for attempting a retry for obtaining the requested collection of segments, then step **524** is again performed, wherein the client presentation software **88** again evaluates the transmission characteristics of the network **70** for selecting a content webserver **96** and subversion of the collection of segments so that there is again a high probability of the newly selected collection of segments being delivered prior to the time that these segments are to be presented on the client node **56**. Accordingly, on such subsequent iterations for determining an alternative way to present a particular portion of the presentation, the following steps may be performed: The original calculation is again performed with new times and current bandwidth information usually resulting in selection of alternative segment collections that are smaller. An overall limit of three re-tries of any URL will force smaller alternative segment collections to be selected, or a message to the audience member stating that the network is not functional.

Returning now to step **532**, if in this decision step it is determined that the requested collection of segments has been timely cached at the client node **56**, then step **544** is performed wherein an evaluation of the network **70** transmission characteristics that occurred during the transmission of the collection of segments. In particular, the following characteristics are determined: average network data rate, the likely range of expected data rates (e.g. within a standard

deviation of the most likely data rate), measurements regarding network errors and/or quality of transmission, total elapsed time taken to complete the transmission of the collection of segments, and/or the size of the transmission.

Subsequently, in step **548**, a determination is made as to whether a host **200** interrupt is detected that requests a halt to the presentation of the current collection of segments. Note that this step is provided as an illustration of interrupt processing that can be performed by the client presentation software **88**. Note, however, that such interrupt processing may be performed between or during substantially any of the processing steps described herein that occurs on the client node **56**. Also note that such host **200** interrupts are likely to be initiated by a leader for the presentation when the leader determines that, e.g., there should be a deviation in the script for the presentation performance. Thus, regardless of where a host **200** interrupt step is performed within the processing steps for the client presentation software **88**, upon detecting this interrupt, the flow of control of the present flowchart returns to a point in the processing wherein the next steps performed are the steps **474** and **476** performed at: (a) the client nodes **56**, and (b) the leader's station(s) **92** and the presentation controlling host **200**.

Assuming that no host interrupt is detected in step **548**, then steps **552** through **560** are iteratively performed until all segments of the current collection of segments are presented to the client. Accordingly, when there are no further segments in the current collection, step **560** routes the flow of control back to the concurrent steps of **474** and **476** as discussed previously hereinabove.

Referring to FIG. **3**, an illustration of a simple script description **600** is shown. Each of the rows **608** after the first column heading row describes a presentation action to be performed during a performance. Each column entry of each row **608** provides information related to the script action to be performed by the row. Following is a description of the data capable of being contained in each column.

A Script Level column **612** for identifying alternative variations of the presentation. For example, a first variation might be directed to the customers of a corporation, another variation directed to the sales representatives of the corporation, and yet another directed to the investors of the corporation. Thus, a single script may be used for a plurality of related presentations that have at least some overlapping content. Accordingly, in column **612**, each digit within each row of the column identifies a presentation variation to which the row applies. Thus, row **608***a* is performed only in the variation of the presentation having a "1" in this column; e.g. rows: **608***a*, **608***d*, **608***e*, **608***g* through **608***o*. Similarly, a second variation of the presentation is performed using rows: **608***b*, **608***d*, **608***f*, through **608***o*. Additionally, a third version is provided by rows: **608***c*, **608***e*, **608***f* through **608***n*. Note, the "END" identifiers in **608***q* designates the end of the script.

An item number column **616** is provided for labeling rows so that a presentation leader can transfer to the rows having a value in this column and proceed sequentially through the script from the labeled row to which the leader transfers. This allows the leader to skip and/or rearrange portions of a presentation performance. Accordingly, there are three rows to which a leader can transfer control, namely, rows: **608***a*, **608***e*, and **608***o*.

A "virtual time" column **620** is provided wherein values in this column set and reset a presentation performance timer so that, for example, some portions of a presentation will automatically be skipped if a performance of the presentation is running behind a predetermined performance schedule. In script description **600**, there are four rows **608** where the presentation performance timer is reset, i.e. rows **608***a*, **608***e*, and **608***j*. Thus, for a presentation performance corresponding to script level **1**, in row **608***a*, the timer is set to 0.00 and the subsequent rows **608** for script level **1** are sequentially performed until **608***e* is encountered, wherein a determination is made as to whether the timer has a value greater than one minute and one second. If this is the case, then the sequential rows (for script level **1**) down to row **608***j* are interpreted by the presentation controlling host **200**, but no host commands are transmitted to either the client nodes **56**, or the phone bridge control **240**. Thus, it is as if the actions for these script rows are skipped. However, at row **608***j*, the timer is reset and each subsequent row **608** (of script level **1**) is performed.

An Action column **624** is provided for designating an action to be performed (if any) during execution of a row **608**. Thus, for row **608***a*, the host **200** instructs all client nodes **56** that a resource (e.g., a content file, or Web page) is available for downloading. Subsequently, for script level **1**, row **608***d* instructs the client nodes **56** to cause their browsers **78** to display the resource. A list of actions that can be designated in the action column **624** are as follows:

(9.1) client_Load—Instructs all client nodes **56** that a resource is available for downloading in background processing.

(9.2) client_Free—Instructs all client nodes **56** to delete a previously downloaded resource.

(9.3) client_Display—Instructs all client nodes **56** to cause their browsers **78** to display a resource. This command implements "Extended" parameters when the Resource Location column **636** has a corresponding entry of "TWFTP". The extended parameters are a second set of resource locations for retrieving the resource to which the corresponding action in the same row **608** is to be applied. For example, a second set of resource locations may be used by the client node **56** when it is determined that the FTP network **70** data transfer rate is unlikely to provide a particular presentation content file (e.g., of presentation elements) at a client node **56** in time for display.

(9.4) client_play—Instructs all client nodes **56** receiving presentation audio content via a network **70** to play a resource.

(9.5) leader_Hold—Causes the host **200** to suspend script interpretation until a next command is received from the leader designating a next row **608** to perform.

(9.6) time_Set_At—Forces a script's virtual time clock (i.e. timer) to a known value.

(9.7) time_Hold_To—Causes the host **200** to suspend script interpretation until a particular state is reached. For example, all clients report a display element command is complete; e.g., the display of a corporate logo.

(9.8) child_Script—Suspend this script, read and process another script in a manner analogous to a programming subroutine invocation.

(9.9) End_Start—Defines the last line (i.e. row **608**) of a script and resets execution to the first line.

(9.10) END—Defines the last interpreted row **608** of a script.

Regarding the "Resource Type" column **632** of script description **600**, the fields of this column provide an indication of the data types and/or organization of the presentation segment collections to which the action of the corresponding "Action" field of the same row applies. In particular, the following types (denoted also hereinafter as "resource types") are available

(10.1) FTP_File—A single file to be pre-cached or downloaded from a webserver(s) **96** to client nodes **56** in the

background using FTP or HTTP when FTP is blocked by security measures.

(10.2) FTP_Dir—An entire directory of files to be precached or downloaded in the background using FTP or HTTP when FTP is blocked by security measures.

(10.3) HTML_File—A single HTML file containing presentation content.

(10.4) MC_Question—An HTML_File to which a client response to presented questions is requested.

(10.5) MC_Answer—An HTML_File to display the results of an MC_Question.

(10.6) Info_Form—An HTML_File to collect data for the profile database **120**.

(10.7) Audio_RaFile—An audio file prepared in advance of the presentation, may be downloaded to client nodes **56** via network **70**.

(10.8) Audio_RaLive—Live streaming of an audio file, via network **70**, requires dynamic real time buffering at the client nodes **56**.

(10.9) THIS LINE—Causes the host **200** to refer to the row **608** of the script having this value (i.e., "THIS LINE"). Thus, the action for the row having this value can be viewed as needing no presentation resources.

(10.10) Twscript—Another script resource used by the current script resource.

In the "Resource Location" column **636** of script description **600**, each row entry indicates a location of the presentation resource to which the action for the row is to be applied. Fields of this column may provide descriptions of a number of alternative locations for obtaining various versions and/or subversions of a presentation segment collection; i.e. alternative locations have a "|" separator therebetween. The types of values that can occur in this column are:

(11.1) SN—Denotes a webserver **96** Name, also may be a physical network **70** address or an Internet domain name, as one skilled in the art will appreciate.

(11.2) TWFTP—Denotes the directory on client nodes **56** created to hold the presentation resources (e.g., presentation segments) downloaded from the webserver **96**.

(11.3) CD—Denotes a CD-ROM drive attached to a client node **56**; note that during preparation for a presentation performance, client determines the drive letter corresponding to the CD-ROM drive at his/her client node **56**.

(11.4) LOCAL—Denotes anywhere on a client node **56**, except the CD-ROM drive or the location designated by TWFTP.

(11.5) END—Denotes a time when clients have used a named resource, e.g., all clients have downloaded and displayed the logo image file, as the name resource.

(11.6) GOT—Denotes a time when clients have accessed the named resource, such as a time after a corporate logo file has been downloaded to all clients.

(11.7) this—Denotes that no external resources such as files, webservers, etc. are required for the command having this value.

Note that in the locations designated in at least (9.1) above, variables or "placeholders" can be provided in a script so that a developer of a script need not have at his/her disposal all the particulars as to where presentation resources (e.g., segment collections) will be stored for access during performance of the presentation. For example, variables or placeholders for as yet unidentified content webservers **96** may be provided as part of a location for a collection of segments. For example, each grouping of clients from the candidate audience members registered for a presentation performance has the following placeholders in presentation scripts defined within a corresponding presentation resource file **212**: (a) the placeholder, "BBAMain" which is to be resolved as the network **70** identifier for the webserver **96** providing access to real time and/or smaller size presentation segment subcollections, (b) "BBA-Ftp" which is to be resolved as the network **70** identifier for a file (Internet) server holding large presentation files suitable for background download to client nodes **56**, (c) "BBA-Ra" which is to be resolved as the network **70** identifier for an audio (Internet) server, or another location that provides access to audio data for the audio player **236**, and (d) "BRA-QA" which is to be resolved as the network **70** identifier for the webserver **96** used for question and answer display sequences.

Regarding the "Resource Name" column **640** of script description **600**, the entries of this column provide an identification of a presentation resource (e.g. presentation data segment file) independently of the network **70** address or node upon which the resource resides. Thus, a complete specification of a location of the resource requires the corresponding resource location and the resource name entries from the same row of script description **600**. The following data types are available for fields of this column:

(12.1) Path—Denotes a path name to a file directory relative to the resource location. It is assumed that a nested or hierarchical file directory notation is used to identify the presentation resource residing at the location denoted by "Path".

(12.2) File—Denotes the name of a resource file.

(12.3) Encoder Task—Identifies a specific real time audio stream accessible from the webserver **96** identified in the corresponding Resource Location **636** column.

The foregoing discussion of the invention has been presented for purposes of illustration and description. Further, the description is not intended to limit the invention to the form disclosed herein. Consequently, variations and modifications commensurate with the above teachings, within the skill and knowledge of the relevant art, are within the scope of the present invention. The embodiments described hereinabove are further intended to explain the best mode presently known of practicing the invention and to enable others skilled in the art to utilize the invention as such, or in other embodiments, and with the various modifications required by their particular application or uses of the invention. It is intended that the appended claims be construed to include alternative embodiments to the extent permitted by the prior art.

What is claimed is:

1. A network presentation distribution system for presenting a presentation, comprising:

one or more presentation content supplying nodes of a communications network, said content supplying nodes for providing access, by a first user at a first client node of the communications network, to a collection of data segments of said presentation using said communications network, wherein said collection includes first and second subcollections of one or more of said segments;

a presentation controlling node for transmitting to at least said first client node, via the communications network, presentation control information used for identifying said first and second subcollections;

a computational component for determining network performance information of the communications network, wherein said computational component determines said network performance information using network data obtained from network transmissions detected at said first client node;

a first segment selector, activated after said first client node receives said presentation control information, for selecting, using said network performance information, one of said first and second subcollections for transmitting from one of said presentation content supplying nodes to said first client node; and

a presentation component at said first client node for presenting said selected one of said first and second subcollections to the first user.

2. A network presentation distribution system as claimed in claim **1**, for determining which of said first and second subcollections to transmit to said first client node, said computational component includes a network analyzer for determining said network performance information using one or more of the following types of said network data: (a) a data transmission rate of said communications network at said first client node; (b) a fluctuation in bandwidth of said communications network at said first client node; and (c) a statistical prediction of a bandwidth of said communications network at said first client node.

3. A network presentation distribution system as claimed in claim **1**, wherein said first segment selector is activated in response to said first client node receiving said presentation control information, and is activated without an intervening manual input from the first user for requesting one of said first and second subcollections.

4. A network presentation distribution system as claimed in claim **1**, wherein a bandwidth of presentation transmissions on the communications network to the first client node varies sufficiently to affect the presenting of the presentation, and the varying bandwidth is substantially uncontrollable from said first client node, and said presentation content supplying nodes.

5. A network presentation distribution system as claimed in claim **1**, wherein at least one of said first and second subcollections is accessible from first and second of said content supplying nodes via first and second routes;

wherein: (a) said first route includes said first content supplying node and not said second content supplying node; and (b) said second route includes said second content supplying node and not said first content supplying node.

6. A system as claimed in claim **1**, wherein (a) and (b) following:

(a) said first subcollection includes video with motion, and said second subcollection includes video with one of: (i) reduced motion, and (ii) no motion, and

(b) said first subcollection is presented to the first user at said first client node simultaneously with said second subcollection being presented to a second user at a second client node.

7. A network presentation distribution system as claimed in claim **1**, wherein -the communications network includes a portion of one of: the Internet, and a network using TCP/IP for communicating between at least one of:

(a) one of said content supplying nodes and said first client node;

(b) said presentation controlling node and said first client node;

(c) one of the content supplying nodes and said presentation controlling node.

8. A network presentation distribution system as claimed in claim **1**, wherein said first client node includes said first segment selector and a first presentation display component for displaying to the first user at said first client node, a first selection of one of said first and second subcollections, made by said first segment selector.

9. A network presentation distribution system as claimed in claim **1**, wherein said first subcollection includes a first video portion, and said second subcollection includes a different second video portion that corresponds in content with said first video portion, and wherein said first and second video portions have substantially different expected data transmission rates for being transmitted to said first client node, and wherein said first segment selector uses said different expected data transmission rates in selecting one of said first and second subcollections.

10. A network presentation distribution system as claimed in claim **1**, wherein an audio portion for said first subcollection is transmitted to said first client node separately from said first subcollection via a phone bridge.

11. A network presentation distribution system as claimed in claim **1**, wherein said first segment selector is resident on said first client node and a second segment selector, activated in response to a second client node receiving said presentation control information, is resident on said second client node, wherein said first and second segment selectors each select, without user selection input, one of said first and second subcollections for simultaneous presenting of a same corresponding portion of the presentation.

12. A network presentation distribution system as claimed in claim **1**, further including a network interface component, residing on said first client node, for receiving said presentation control information and transmitting a request for a subcollection of said collection of data segments to one of said content supplying nodes, wherein said network interface component includes a network browser for communicating with said communications network.

13. A network presentation distribution system as claimed in claim **1**, further including a content manager for distributing, via said communications network, at least a video portion of said first and second different subcollections of said presentation to said content supplying nodes prior to a commencement of a performance of said presentation, wherein during said performance of said presentation, said first subcollection is presented at said first client node when received from said first content supplying node, and said second subcollection is simultaneously presented at a second client node when received from said second content supplying node after said second client node receives said presentation controlling information.

14. A network presentation distribution system as claimed in claim **1**, wherein there are first and second versions of said presentation performed synchronously, respectively, at said first client node and a second client node receiving said presentation control information, wherein there is a correspondence in content between at least a majority of segments in said first version with segments of said second version, and wherein said first and second versions have their corresponding audio portions in different natural languages.

15. A network presentation distribution system as claimed in claim **1**, further including a leader node that is accessed by a leader for controlling a performance of said presentation, wherein the leader directs a pace and content of the presentation performance via said presentation controlling network node that synchronizes a performance of said presentation on said first client node with a performance of said presentation on a second client node so that a particular one or more of said segments are presented on said first client node synchronously with an alternative one or more segments output by one of said content supplying nodes to said second client node, wherein said alternative one or more segments correspond in content to said particular one or more segments.

16. A network presentation distribution system for presenting a presentation, comprising:

a first and second presentation content supplying nodes of a communications network, said first and second content supplying nodes for providing access to one or more collections of data segments of said presentation using said communications network;

a presentation controlling node for transmitting to at least a first client node, presentation control information used for identifying a first subcollection of said segments for presentation to a user at said first client node; and

a content node selector, activated after said first client node receives said presentation control information, said content node selector for selecting one of said first and second content supplying nodes for transmitting one of: (a) said first subcollection to said first client node using said communications network; and (b) an alternative subcollection of one or more of said segments predetermined as a replacement for said first subcollection for presenting at said first node;

wherein said first client node transmits a presentation request to a selected one of said first and second content supplying nodes, said presentation request including at least one of (a), (b) and (c) following: (a) an identification of a version of said presentation, said version for a predetermined group of presentation audience members, (b) an identification of one of said first and said alternative subcollections identified in a predetermined script for said presentation; and (c) information for identifying an alternative segment determined by a leader of a performance of said presentation, wherein said alternative segment is not identified in said script.

17. A network presentation distribution system as claimed in claim 16, wherein said content node selector changes from selecting said first content supplying node to selecting said second content supplying node according to a value dependent on a measurement related to a previous data transmission rate between said first client node and at least one of said first and second content supplying nodes, wherein said value is expected to be indicative of a current data transmission rate between said first client node, and at least one of said first and second content supplying nodes.

18. A network presentation distribution system for presenting a presentation, comprising:

one or more content supplying network nodes able to provide a plurality of segments to a first client node of a plurality of network client nodes, via a communications network, wherein each of said segments provides a portion of a particular presentation;

a presentation controlling network node for transmitting presentation control information providing identities of segments in a collection of said segments when the presentation is performed at said first client node;

a presentation network component at said first client node, wherein, after receiving said presentation control information, said presentation network component transmits segment selection information, obtained using said presentation control information, to a first of said content supplying nodes for obtaining the collection by said first client node;

a segment selector that uses one of: (a) the presentation control information, and (b) the segment selection information for identifying a first collection of said segments to transmit from the first content supplying node to the first client node;

wherein said presentation controlling network node synchronizes a performance of said presentation on said first client node with a performance of said presentation on a second client node so that a particular one or more of said segments are presented on said first client node synchronously with a presentation of an alternative one or more segments output by one of said content supplying nodes to said second client node, wherein said alternative one or more segments correspond in content to said particular one or more segments.

19. A network presentation distribution system as claimed in claim 18, wherein said segment selection information depends on a data transmission characteristic of a transmission to the first client node from one of the content supplying nodes;

wherein said data transmission characteristic is dependent on one of a network data transmission rate and a measurement of network data transmission errors; and

wherein said data transmission characteristic is expected to be indicative of a current transmission rate to the first client node from the one content supplying node.

20. The network presentation distribution system as claimed in claim 18, wherein a performance of said particular one or more segments on said first client node includes video with motion, and a performance of said alternative one or more segments on said second client node includes video with one of: (i) reduced motion, and (ii) no motion.

21. A method for presenting a networked presentation, comprising:

storing a plurality of segments of a presentation for network access via one or more content supplying nodes of a communications network, wherein there are subcollections of one or more of the segments, each subcollection having a predetermined presentation order and there is a first and a second of the subcollections, wherein said first subcollection is replaceable with said second subcollection when presenting the presentation;

identifying a plurality of network client nodes for presenting the presentation;

transmitting, via the communications network, presentation control information to a first and second of the client nodes;

first identifying said first subcollection for presenting at the first client node using said transmitted presentation control information;

second identifying said second subcollection for presenting at the second client node in place of the first subcollection, using said transmitted presentation control information;

first retrieving said first subcollection from said content supplying nodes for presenting at the first client node;

second retrieving said second subcollection from said content supplying nodes for presenting at the second client node substantially simultaneously with the presenting of the first subcollection at the first client node.

22. A method as claimed in claim 21, wherein said step of transmitting to the first and second client nodes is performed substantially simultaneously, using the Internet as at least a portion of the communications network.

23. A method as claimed in claim 22, further including a step of synchronously presenting the presentation at the first client node with presenting the presentation at the second client node so that each of the subcollections presented at the first client node is presented substantially simultaneously with some of the subcollections at the second client node.

24. A method as claimed in claim 23, wherein said step of synchronously presenting includes obtaining, by said first client node, a network performance measurement of a network transmission from a first of the content supplying network nodes to the first client node.

25. A method as claimed in claim 21, wherein said step of first retrieving includes retrieving the first subcollection by the first client node from a first of the content supplying nodes; and

said step of second retrieving includes retrieving the second subcollection by the second client node from a second of the content supplying nodes different from the first content supplying node.

26. A method as claimed in claim 21, further including synchronizing the presenting of the first and second subcollections at the first and second client nodes with a corresponding audio portion of the presentation provided at the sites of the first and second client nodes, wherein the corresponding audio portion is provided to the sites using a different network protocol from a protocol used in said step of transmitting via the communications network.

27. The method as claimed in claim 21, wherein said step of first identifying occurs prior to said step of first retrieving and said step of first identifying includes:

obtaining one or more measurements related to an expected time for transmitting said first subcollection to the first client node via the communications network;

wherein said one or more measurements are indicative of one or more of:

(a) a size of said first subcollection;

(b) a bandwidth of previous transmissions via the communications network to the first client node;

(c) an overhead indicative of a protocol used in transmissions via the communication network to the first client node;

(d) an allotted time for said first client to receive said first subcollection;

(e) a fluctuation in bandwidth of the communications network;

(f) an error rate from the communications network;

(g) a predictive statistical expectation of a bandwidth on the communications network.

28. The method as claimed in claim 21, further including:

establishing whether said first subcollection is cached at said first client node within a desired time prior to a performance of the cached subcollection.

29. The method as claimed in claim 28, further including determining said desired time by determining one or more of:

(a) a measurement related to the performance of the presentation at said second client node;

(b) a predetermined length of time; and

(c) a length of time determined by a leader for the presentation.

30. The method as claimed in claim 28, further including determining said desired time by comparing: (a) a transmission rate of the communications network between the first client node and at least one of said content supplying nodes; and (b) a transmission rate of the communications network between said second client node, and at least one of said content supplying nodes.

31. A method for presenting a networked presentation, comprising:

storing a plurality of segments for a presentation, wherein said segments are network accessible from one or more content supplying network nodes for presenting the presentation, and wherein for a first subcollection of one or more of the segments, said first subcollection is capable of being accessed from a first of the content supplying nodes, and at least one of (a) and (b):

(a) said first subcollection has a corresponding different second subcollection of one or more of said segments that has been identified as a replacement for the first subcollection, and

(b) said first subcollection is capable of being accessed from a second of said content supplying nodes;

providing for a first client node, a network transmission of the presentation, wherein the first client node has network access to at least one of: the first and second subcollections, and the first and second content supplying nodes;

determining, for the first client node, a measurement indicative of an expected network performance of a communications network for transmitting the first subcollection from the first content supplying node to the first client node;

selecting at least one of: the second subcollection and the second content supplying node when said measurement is indicative of an undesirable performance of the presentation at the first client node.

32. A method as claimed in claim 31, wherein said providing step includes accessing, by the first client node, said segments: (a) from said first content supplying node via a first route through the communications network, and (b) from said second content supplying node via a second route through the communications network;

wherein said first route does not include said second content supplying node, and said second route does not include said first content supplying node.

33. A presentation system for presenting a multimedia presentation having video and audio portions that correspond in content, comprising:

one or more video supplying network nodes for communicating one or more video portions of the multimedia presentation to one or more networked client nodes;

a phone bridge controller for providing commands to one or more phone bridges for routing presentation related audio communication, to a corresponding telephony device at each site having one of the client nodes, wherein: (a) each of one or more portions of the related audio communication corresponds in content with one of the video portions, and (b) the telephony devices at the sites transform the presentation related audio communications into an audible form having natural language speech included therein;

a presentation controller for synchronizing a presenting, at the client nodes, of predetermined ones of the video and audio portions that correspond in content, wherein for each of the client nodes, said presentation controller: (a) communicates with the client node for providing information used for identifying a particular one of the video portions for transmission from one of the video supplying network nodes to the client node; and (b) communicates with said phone bridge controller for routing, to the client node, the audio portion corresponding in content with the particular video portion.

34. A method of presenting a multimedia presentation comprising:

storing a script of one or more presentation commands for performing multimedia segments of said presentation wherein a first of said one or more commands refer-

ences one or more unresolved identifiers of one or more content supplying nodes providing access to at least a video portion of a first subcollection of one or more of said segments via a communications network;

storing a communications network identifier for each of one or more of said content supplying nodes providing network access to at least said video portion of said first subcollection;

identifying one or more client nodes for receiving a performance of said presentation;

resolving said unresolved identifiers of a first of said commands using said stored communications network identifiers for said one or more content supplying nodes, thereby obtaining a resolved command;

performing said resolved command at each of said client nodes during said performance by requesting said at least video portion of said first subcollection from a first of said content supplying nodes;

requesting by a first of said client nodes, when said at least video portion of said first subcollection is not received by said first client node within a predetermined time, one of: (a) at least a video portion of an alternative subcollection of one or more of said segments, in place of said at least video portion of said first subcollection, from one of said content supplying nodes, and (b) said at least video portion of said first subcollection from an alternate one of said content supplying nodes.

35. A method as claimed in claim **34**, further including transmitting said resolved command from a presentation controlling node to each of said client nodes via at least a portion of one of: the Internet, and a network using TCP/IP as a communication protocol.

36. The method of claim **34**, further including a step of controlling said performance of said presentation via a leader node receiving input from a leader for said performance of said presentation, wherein the leader directs a pace and content of the presentation performance via a presentation controlling network node, wherein the presentation controlling network node synchronizes said performance of said presentation on said first client node with a performance of said presentation on a second client node so that when one of said first and said alternative subcollection are presented on said first client node, there is a synchronized performance of a second subcollection of said segments on said second client node, wherein said first and second subcollections correspond in content.

37. A network presentation distribution system for presenting a presentation, comprising:

one or more presentation content supplying nodes of a communications network, said content supplying nodes for providing access to a collection of data segments of said presentation using said communications network wherein said collection includes first and second subcollections of one or more of said segments;

a presentation controlling node for transmitting to at least a first client node, via the communications network, presentation control information used for identifying a group of subcollections of said segments, said group including said first and second subcollections; and

a first segment selector, activated in response to said first client node receiving said presentation control information, for selecting one of said first and second subcollections for transmitting said selected subcollection from one of said presentation content supplying nodes to said first client node;

wherein said first segment selector includes a comparator for comparing (a) and (b) following: (a) a value indicative of a length of time expected for said first client node to receive one of said first and second subcollections, and (b) a value indicative of one of: (i) a length of time related to one or more other client nodes receiving one or more subcollections of said collection, (ii) a predetermined default length of time, and (iii) a length of time determined by a leader of said presentation performance.

38. A network presentation distribution system for presenting a presentation, comprising:

one or more presentation content supplying nodes of a communications network, said content supplying nodes for providing access to a collection of data segments of said presentation using said communications network, wherein said collection includes first and second subcollections of one or more of said segments;

a presentation controlling node for transmitting to at least a first client node, via the communications network, presentation control information used for identifying said first and second subcollections;

a first segment selector, activated in response to said first client node receiving said presentation control information, for selecting one of said first and second subcollections for transmitting said selected subcollection from one of said presentation content supplying nodes to said first client node; and

a phone bridge controller for controlling one or more telephone bridges providing audio communication during a performance of the presentation, through a telephone at a client site having said first client node, wherein said telephone provides the audio communication to the client site different from said communications network.

39. A network presentation distribution system for presenting a presentation, comprising:

a first and second presentation content supplying nodes of a communications network, said first and second content supplying nodes for providing access to one or more collections of data segments of said presentation using said communications network;

a presentation controlling node for transmitting to at least a first client node, presentation control information used for identifying a first subcollection of said data segments for presenting at said first client node;

a content node selector, activated in response to said first client node receiving said presentation control information, for selecting one of said first and second content supplying nodes for transmitting one of: (a) said first subcollection to said first client node using said communications network; and (b) an alternative subcollection of one or more of said segments predetermined as a replacement for said first subcollection; and

a phone bridge controller for routing presentation related audio communications to a client site having said first client node, via one or more phone bridges, wherein a telephone at said client site transforms the presentation related audio communications into an audible communication having natural language speech included therein.

40. The network presentation distribution system of claim **39**, further including:

a cache at said first client node for caching, as a cached subcollection, said selected one of said first subcollection and said alternative subcollection;

wherein said cached subcollection is cached within a desired time prior to a performance of said cached

subcollection, and wherein said desired time is determined using one or more of:

(a) a measurement related to the performance of the presentation at said second client node;

(b) a predetermined length of time; and

(c) a length of time determined by a leader for the presentation.

41. A network presentation distribution system for presenting a presentation, comprising:

a first and second presentation content supplying nodes of a communications network, said first and second content supplying nodes for providing access to one or more collections of data segments of said presentation using said communications network;

a presentation controlling node for transmitting to at least a first client node, presentation control information used for identifying a first subcollection of said segments for presentation at said first client node;

a content node selector, activated in response to said first client node receiving said presentation control information, for selecting one of said first and second content supplying nodes for transmitting one of: (a) said first subcollection to said first client node using said communications network; and (b) an alternative subcollection of one or more of said segments predetermined as a replacement for said first subcollection; and

a phone bridge controller for routing presentation related audio communications to a client site having said first client node, via one or more phone bridges, wherein a telephone at said client site transforms the presentation related audio communications into an audible communication having natural language speech included therein.

42. A network presentation distribution system for presenting a presentation, comprising:

a first and second presentation content supplying nodes of a communications network, said first and second content supplying nodes for providing access to one or more collections of data segments of said presentation using said communications network;

a presentation controlling node for transmitting via the communications network, to at least a first client node, presentation control information used for identifying a first subcollection of said segments for presentation at said first client node;

a content node selector, activated in response to said first client node receiving said presentation control information, for selecting one of said first and second content supplying nodes for transmitting one of: (a) said first subcollection to said first client node using said communications network; and (b) an alternative subcollection of one or more of said segments predetermined as a replacement for said first subcollection;

wherein said presentation controlling node includes a presentation script processing component for generating presentation performance commands from a script for said presentation, wherein for said first client node, said generated commands synchronize a display of a video content of said segments with a performance of a related presentation audio content; and

wherein said presentation controlling node includes a phone bridge controller for directing a phone bridge to provide audio communications between a client site having said first client node and a leader of a performance of said presentation, wherein said phone bridge routes presentation performance related audio information differently from network communications between said presentation controlling node and first client node via said communications network.

43. A network presentation distribution system for presenting a presentation on a communications network having unexpected network performance fluctuations at a user node, comprising:

one or more presentation content supplying nodes of a communications network, said content supplying nodes for providing access, at the user node via the communications network, to a collection of data segments of said presentation using said communications network, wherein said collection includes first and second subcollections of one or more of said segments;

a computational component for determining network performance information of the communications network, wherein said computational component determines said network performance information using network data obtained from network transmissions detected at said user node;

a segment selector, activated during the presentation for selecting, using said network performance information, one of said first and second subcollections for transmitting from one of said presentation content supplying nodes to said user node; and

a presentation component at said user node for presenting said selected one of said first and second subcollections to a user at the user node.

* * * * *

BEST COPY

SERIAL NUMBER	FILING DATE	CLASS	GROUP ART UNIT	ATTORNEY DOCKET NO.
09/052,862	03/31/98	~~395~~ 709	2756	3654-1

APPLICN.

ROBERT H. OGDON, LITTLETON, CO; FRANK E. JOHNSON, AURORA, IL.

CONTINUING DOMESTIC DATA********
VERIFIED PROVISIONAL APPLICATION NO. 60/041,770 03/31/97

Yes AR

371 (NAT'L STAGE) DATA********
VERIFIED

None AR

FOREIGN APPLICATIONS********
VERIFIED

None AR

FOREIGN FILING LICENSE GRANTED 05/05/98 ***** SMALL ENTITY *****

Foreign Priority claimed 35 USC 119 (a-d) conditions met Verified and Acknowledged	☐yes ☒no ☐yes ☐no Examiner's Initials	☐Met after Allowance Initials	STATE OR COUNTRY	SHEETS DRAWING	TOTAL CLAIMS	INDEPENDENT CLAIMS
			CO	7	45	7

ADDRESS

SHERIDAN ROSS
1700 LINCOLN STREET
SUITE 3500
DENVER CO 80203

TITLE

METHOD AND SYSTEM FOR PROVIDING A PRESENTATION ON A NETWORK

FILING FEE RECEIVED	FEES: Authority has been given in Paper	
$834	No. _____ to charge/credit DEPOSIT ACCOUNT NO. _____ for the following:	☐ All Fees ☐ 1.16 Fees (Filing) ☐ 1.17 Fees (Processing Ext. of time) ☐ 1.18 Fees (Issue) ☐ Other _____ ☐ Credit

PATENT APPLICATION SERIAL NO. 09/052,862

U.S. DEPARTMENT OF COMMERCE
PATENT AND TRADEMARK OFFICE
FEE RECORD SHEET

04/06/1998 BBRANCH 00000028 09052862
01 FC:201 395.00 OP
02 FC:202 164.00 OP
03 FC:203 275.00 OP

PTO-1556
(5/87)

jc515 U.S. PTO
03/31/98

A

UTILITY PATENT APPLICATION TRANSMITTAL

(Only for new nonprovisional applications under 37 CFR 1.53(b))

Attorney Docket No.: 3654-1
First Named Inventor or Application Identifier: Frank E. Johnson
Express Mail Label No.: IBI914065922US
Title: "METHOD AND SYSTEM FOR PROVIDING A PRESENTATION ON A NETWORK"

Assistant Commissioner for Patents
Box Patent Application
Washington, DC 20231

Enclosed for filing with the above-identified utility patent application, please find the following:

1. Specification (Total Pages of Text, Including Abstract and Claims: 99)
2. Drawing(s) (35 USC 113) (Total Sheets: 7) [ ] FORMAL [X] INFORMAL
3. Oath or Declaration (Total Pages: 3) [X] Signed [ ] Unsigned
4. Assignment Papers *(cover sheet & document(s))*
5. Power of Attorney
6. Return Postcard (MPEP 503) *(should be specifically itemized)*
7. Small Entity Statement(s)
8. A check in the amount of $834.00 is enclosed.

FEE CALCULATION:

	(COL. 1) NO. FILED			(COL. 2*) NO. EXTRA	SMALL ENTITY RATE	SMALL ENTITY FEE		LARGE ENTITY RATE	LARGE ENTITY FEE
BASIC FEE:						$395.00	OR		$790.00
TOTAL CLAIMS:	45	-	20	25	X $11 =	$275.00	OR	X $22 =	
INDEP. CLAIMS:	7	-	3	4	X $41 =	$164.00	OR	X $82 =	
MULTIPLE DEPENDENT CLAIMS					+ $135 =	$	OR	+$270 =	
*IF THE DIFFERENCE IN COL. 2 IS LESS THAN ZERO, ENTER "0" IN COL. 2.					TOTAL:	$834.00			

OTHER INFORMATION:

1. The Commissioner is hereby authorized to debit any underpayments or credit any overpayment to Deposit Account No. 19-1970.
2. Correspondence Address:

SHERIDAN ROSS P.C.
1700 Lincoln Street, Suite 3500
Denver, Colorado 80203
Telephone: (303) 863-9700
Facsimile: (303) 863-0223

Respectfully Submitted,

SHERIDAN ROSS, P.C.

Douglas Swartz

Date: March 31, 1998

Douglas W. Swartz
Registration No. 37,739

METHOD AND SYSTEM FOR PROVIDING A PRESENTATION ON A NETWORK

Ins E1

FIELD OF THE INVENTION

The present invention relates to a networked presentation system for providing a presentation to a plurality of client nodes on a communications network such as the Internet, and more particularly to a presentation system wherein network transmission characteristics are utilized in determining the presentation materials presented at each client node during a performance of the presentation.

BACKGROUND OF THE INVENTION

Interactive or live presentations via a telecommunications network (i.e., "telepresentations" such as teleconferences etc.) are becoming a viable alternative to face-to-face meetings due to the greater cost effectiveness of such telepresentations. However, there is still substantial expense in conducting such a telepresentation, particularly when the presentation members (i.e., presentation leaders and audience members) reside at a large number of geographically scattered sites. In particular, each of the sites may require specialized video conferencing systems with high data transmission lines for connecting the telepresentation members. Thus, due to the expense of provisioning and maintaining such networked conferencing systems, corporations typically have only a small number of such conferencing

systems at strategically located telepresentation centers for conducting such telepresentations. However, there are numerous drawbacks to this approach, such as:

(1.1) The dedicated telepresentation centers are expensive to maintain;

(1.2) Presentation participants are still required to travel to these centers; and

(1.3) Potential members of such a presentation who are not able to access such a center are excluded from the presentation.

Accordingly, it would be advantageous to have a network presentation distribution system that alleviates these drawbacks, wherein such a system would allow individuals to access and/or participate in a presentation using standard telephony and Internet network connections found in most offices and many homes.

SUMMARY OF THE INVENTION

The present invention is a network presentation distribution system for providing a presentation, via one or more communication networks, to a plurality of presentation members simultaneously. That is, the present invention distributes a presentation synchronously to presentation members via the one or more communication networks, wherein a communication network is defined as both the physical

fuboTV Media Inc.
Exhibit 1015
Page 040

components and the communication protocol(s) utilized on the network components and wherein the term, "presentation members" (also denoted "users"), includes both audience members (also denoted "clients") and presentation leaders. Moreover, the present invention provides interactive and/or real-time presentations to presentation members that are geographically scattered when each such member has access to one or more commonly available communication networks such as the Internet and a conventional telephony network for telephone-to-telephone voice communication. For example, the present invention may communicate the video portion of a presentation to a user site via the Internet (more generally, via any TCP/IP network) while a corresponding audio portion may be communicated to the user site via a conventional telephony network and a conventional telephone at the user site. However, other embodiments are also within the scope of the present invention. For example, both the video and audio portions of the presentation may be provided solely by a TCP/IP network such as the Internet, assuming that there is sufficient communication bandwidth to synchronize presentation transmissions to the presentation members.

The present invention distributes a presentation (synonymously also denoted a "show") to presentation members by a novel distribution of presentation materials among network server nodes of a TCP/IP network (hereinafter assumed

fuboTV Media Inc.
Exhibit 1015
Page 041

to be the Internet for simplicity). That is, due to the typically "bursty" nature of transmissions between nodes of such a network, a version of the presentation may be accessed synchronously from different network server nodes, or different versions of the presentation may be accessed synchronously from one or more of the network server nodes. Thus, in one embodiment, the present invention provides for a plurality of at least one of:

(2.1) One or more network server nodes (each hereinafter also denoted synonymously as a "network server," "content webserver", "content supplying node", and "supplying node"), whereby audience members receive presentation materials; and/or

(2.2) Different versions of the same presentation, accessible from the one or more of the content webservers, wherein each version may be for a different group of audience members such as a group for Japanese speaking audience members, or audience members affiliated with a particular organization.

Note that each of the one or more presentation versions includes one or more presentation segments (hereinafter also denoted simply "segments") that provide different portions of the presentation. More precisely, subcollections each having one or more segments are provided as presentation "elements" in that each such subcollection is intended to be an

fuboTV Media Inc.
Exhibit 1015
Page 042

indivisible portion of a presentation performance. Moreover, each version of a presentation typically has its subcollections of segments (i.e, presentation elements) ordered according to their presentation sequence. Moreover, substantially every segment (or subcollections thereof) in one version corresponds with a segment (or subcollections thereof) having the same presentation order, in each of the other versions. Thus, assuming corresponding segments (or subcollections thereof) in different versions have approximately the same presentation duration, any of the corresponding alternative segments (or subcollections thereof) from different versions can be presented as a replacement for another such corresponding segment (or subcollection) during the presentation. Thus, it is an aspect of the present invention to provide corresponding alternative segments (or subcollections thereof) having substantially different network transmission requirements so that such corresponding alternative segments (or subcollections thereof) can be substituted for one another depending on the performance of the communications network. For example, the segments (subcollections) of a first version of a presentation may require a network transmission rate sufficient for real time or animated video and the segments for another version of the presentation may only require a transmission rate sufficient for graphic slides. Thus, of a set of corresponding segments

fuboTV Media Inc.
Exhibit 1015
Page 043

(subcollections), one segment (subcollection) may merely be an audio presentation via a telephone, whereas an alternative segment (subcollection) may be a multimedia presentation element that is a combination of one or more of the following types of HTML multimedia data: audio, images, animation or video, wherein such a multimedia element plays over a set period of time and can be as simple as a single image or as complex as a combination of images, audio, animation and video. Furthermore, segments may include interactive questions that audience members answer by, e.g., clicking on their display screens.

Note that it is also an aspect of the present invention that an ordering of predefined segments (or subcollections thereof) is capable of being presented and archived, and subsequently represented. Moreover, such an ordering can take into account alternative segments for the presentation. Thus, multiple sequentially- ordered scripts can be created so that the leader can choose to change scripts in the middle of a presentation based on user feedback. Accordingly, a presentation leader has the ability to stop presentation of a particular script and its current subcollection of segments and change to a different subcollection of segments to be delivered to the audience. Subsequently, the leader can then resume the initial script at any time.

Accordingly, to take advantage of this novel distribution of presentation materials, the present invention coordinates and controls computations and presentations at each client network node for each presentation audience member (hereinafter each such network node also may be synonymously denoted as a "client node," "user network node" or simply "user node") substantially simultaneously. In particular, one or more presentation controlling network connected nodes (each hereinafter also denoted a "host node") is provided for transmitting presentation controlling commands to the client nodes so that there is retrieval of the presentation segments from one or more versions of the one or more network content server nodes depending on, for example, performance characteristics of network transmissions. Thus, it is an aspect of the present invention to dynamically and adaptively switch between content webservers and/or versions of the presentation according to network transmission characteristics at each client network node so that the clients at the client nodes have presented to them simultaneously, synchronously and in real time, corresponding (in content) segments of the presentation. For example, a first client (at a first client node) may experience the presentation as an ordered series of presentation segments, wherein the first and second ordered segments are presented in full animation, wherein the first of the ordered segments is obtained from a first content

fuboTV Media Inc.
Exhibit 1015
Page 045

webserver and the second segment of the ordered segments is obtained from a second content webserver. Moreover, synchronously with the presentation to the first client, a second client (at a second client node) may experience the presentation in a slide show format from a third content webserver, wherein the initial two segments presented are corresponding alternative segments to the first and second segments presented to the first client. Additionally, a third client may synchronously experience the first segment of the presentation via network transmissions from the first content webserver but subsequently experience the corresponding slide show alternative to the second segment from the third content webserver due to, for example, network transmission slowdowns.

It is a further aspect of the present invention to synchronously provide audio and video portions of the presentation through different communication channels (a communication channel being a physical signal transport path together with a particular signal protocol). For example, in one embodiment of the present invention (denoted hereinafter the "Telephony/Internet embodiment"), the audio portion of the presentation is communicated audibly directly to a standard telephone using conventional voice grade telephony transmissions, and the corresponding video portion of the presentation is transmitted via a different network such as the Internet (more generally referred to herein as a

fuboTV Media Inc.
Exhibit 1015
Page 046

"communications network") using, e.g., a modem to interpret the transmission signals.

It is a further aspect of the present invention to provide the same audio presentation portion to each client, and in this manner, maintain the continuity of the presentation between clients. Thus, regardless of the version of the video presentation provided, the clients have their presentations synchronized by at least experiencing simultaneously the same audio presentation.

It is also an aspect of the present invention to allow presentation members to communicate with one another. For example, in the Telephony/Internet embodiment, a client may communicate with other presentation members (including the presentation leader) during the presentation via the phone and/or by Internet messaging.

In providing the above capabilities of the network presentation distribution system of the present invention, one or more of the previously mentioned presentation controlling network nodes ("host nodes") are utilized, wherein these nodes direct the flow of the presentation data between the presentation members. For example, in the Telephony/Internet embodiment, such a host node, upon receiving the presentation instructions from a presentation leader indicating the next presentation segment(s) to be presented, transmits Internet presentation control signals to each of the client nodes

fuboTV Media Inc.
Exhibit 1015
Page 047

identifying the next collection of corresponding versions of video segments from which each client node is to select a video segment for presenting. Additionally, the host node coordinates any accompanying audio portion for this segment so that the timing for the presentation of these audio and video portions of the segment(s) are synchronized.

Moreover, during a presentation a host node provides a leader of the presentation with the ability to establish and control audience member involvement in the presentation. In particular, in the Telephony/Internet embodiment, this aspect of the invention is provided by the leader controlling the functionality of one or more phone bridges through which all the audio communication during the presentation may be routed. Accordingly, at any point the leader can speak into a microphone and broadcast his/her live voice to the audience members through the phone bridge(s). This live voice audio is automatically mixed with any segment audio concurrently being provided by the phone bridge(s). The leader can control the volume of the segment audio routed through the phone bridge(s) via controls at a leader control station (or simply "leader station"). When enabled by one of the phone bridges, the leader can also control the relative volume of his/her microphone. Otherwise the audio presentation portion routed through the phone bridge(s) is balanced by the automatic gain control on the phone bridge(s).

fuboTV Media Inc.
Exhibit 1015
Page 048

It is also an aspect of the present invention that any audience member can "request the microphone," from the leader to speak to the presentation audience. Accordingly, the leader has the ability to allow an audience member to speak to the entire audience. The leader can, of course, also choose to stop such audience participation at any time. Thus, the presentation leader may enable and disable audience member involvement during the presentation.

It is also an aspect of the present invention that whenever an on-screen question is answered by audience members, the results are automatically collected and can be graphed. The leader can choose to display the graphical results to all of the audience members. An audience profile database may be created with the data obtained from each audience member. Note that the audience profile database is maintained beyond any one presentation if such is desired.

It is yet another aspect of the present invention that in parallel with all of the other types of interactions between presentation members, text messaging between the leader and any or all of the audience members is done through a messaging window. Further, audience members can send private messages to the leader as well as each other. These messages can be read during the presentation without interrupting the flow of the presentation.

fuboTV Media Inc.
Exhibit 1015
Page 049

In another embodiment of the present invention, note that both the video and audio portions for a presentation may be provided by the Internet. Moreover, the present embodiment and the Telephony/Internet embodiment discussed above may be intermixed during a presentation so that some clients may receive the entire presentation via the Internet (more generally, via a communications network having physical transport and protocol(s) for supporting multimedia presentations) whereas other clients may receive the audio portion of the presentation via telephony transmissions of conventional voice communication through a telephone handset.

Thus, audience members may simultaneously receive a coordinated sequence of multimedia data controlled by the leader to be displayed, e.g., by an Internet browser such as Netscape Navigator or Microsoft Internet Explorer. Moreover, the present invention supports standard media types, e.g., GIF animation, as well as plug-in components such as Java and Shockwave for presenting the data (audio, graphic images, animation and video) in real time at an audience member's browser. Furthermore, several variations of presentation content can be delivered based on, e.g., the current bandwidth available and the client's affiliated network server(s).

Accordingly, the following advantages are provided by the present invention.

fuboTV Media Inc.
Exhibit 1015
Page 050

(3.1) Allocated Bandwidth for Server Data Availability: The present invention allows the leader to selectively organize the number of audience members drawing data from a particular communications network server. By limiting the number of audience members on such a server to no more than 75, and controlling the presentation services provided to audience members, presentation related data availability is enhanced for audience members.

(3.2) Enhanced Reliability Through Distributed Components: The present invention supports presentation content being distributed to any number of communications network (web) servers for enhanced reliability. Thus, if one of these network servers becomes inaccessible during a presentation, the present invention utilizes a notion of "virtual servers" (i.e., a collection of a number of communications network servers from which presentation data can be selectively transmitted) for determining an alternative communications network server. Accordingly, this allows the clients (audience members) using the affected communications network server to be switched to another network server in the virtual server collection during the presentation.

fuboTV Media Inc.
Exhibit 1015
Page 051

(3.3) Evens out "Bursting" of Data by Distributing Its Delivery:

Although each segment of a presentation is treated as a unique (multi)media element, the present invention is capable of delivering an entire collection of presentation segments to a client node while the presentation is being performed. This enables a more smooth flow of data during the presentation even though the segments may be transferred to client nodes in bursts.

(3.4) Monitors Transmission Bandwidth and Alternate Data:

Even with enhanced presentation data availability and distributed communications network (e.g. web) servers, there is still the possibility of data delays from a slow network server of a saturated communications network (e.g., Internet) service provider. Accordingly, the present invention monitors: (a) characteristics of network transmissions of presentation materials to client nodes, e.g., the transmission network bandwidth (e.g., the data transmission rate), and (b) the amount of data cached on each client's node. Thus, when the data required for a segment is not timely cached prior to its intended performance at a client's node, alternate segment data is

automatically requested from the communications network by the client node. In particular, the client node may request the segment data from an alternate communications network server through network address (URL) selection of the alternate communications network server.

(3.5) Allows Presentation Participants to Reconnect and Synchronize with a Presentation in Progress:

If a presentation participant is disconnected from the communications network (e.g., Internet) during a presentation, there is a simple reconnect option to put the participant back in the presentation synchronized with the rest of the participants. Note that since the audio portion may be provided via a separate telephony (voice communication) network, it is likely that the disconnected participant is able to maintain the continuity of the presentation.

(3.6) Utilizes Controlled Client Requests:

For a given presentation, the present invention directs each client node to request presentation content from a given set of communications network servers rather than having such servers push presentation content to the client node. Among other advantages, this enables dynamic control of

the pace of the presentation by a presentation leader while each client node selects specific display materials to attain that pace. Moreover, this strategy of requesting presentation content is typically not blocked by network firewalls such as are common in communicating with secure corporate intranets.

(3.7) Allows a Presentation to be Provided in Several Languages Simultaneously:

The present invention's distributed network processing architecture makes it possible to present concurrently a presentation with content provided in natural languages specific to the audience members. For example, for the same presentation performance, different audience members may have the audio portion of the presentation presented in different languages, e.g., English and Japanese. Moreover, the video content (e.g., on HTML pages) can be specified so that written text provided in the presentation can be displayed in different natural languages, depending on audience member preference.

(3.8) Cooperates with Firewalls:

The present invention allows confidential presentation data to be kept within a corporate

fuboTV Media Inc.
Exhibit 1015
Page 054

intranet behind a firewall (i.e., a network security feature that restricts communications with devices not included in the intranet, and in particular, that restricts the access to data stored within the intranet). Thus, the present invention allows a show or presentation to be controlled externally from the firewall, while at least the confidential data remains within the firewall and is presented to only those within the firewall under the direction of a leader that is potentially outside the firewall. Further, because the present invention employs a "client-request" technology, where each presentation member's browser requests information from a communications network server, typically data transmissions in response to such requests are not blocked by most firewalls.

Other features and benefits of the invention will become apparent from the detailed description and the accompanying figures herein.

BRIEF DESCRIPTION OF THE DRAWINGS

Figs. 1A and 1B are a block diagram showing the functional components of the present invention such as the Internet;

fuboTV Media Inc.
Exhibit 1015
Page 055

Figs. 2A - 2D present a flowchart of the steps performed (by the embodiment of Figs. 1A and 2B) for presenting a multimedia presentation to a plurality of clients, each at a different client node.

Fig. 3 is an illustration of a presentation script for the present invention.

DETAILED DESCRIPTION OF THE PREFERRED EMBODIMENT

In Fig. 1, a block diagram illustrating the components of the presentation system 50 of the present invention is provided, wherein solid arrows denote presentation data flows and dashed arrows denote control data flows. Note that the presentation system 50 utilizes the following high-level components:

(4.1) Client Sites 54: Client sites 54, where audience members receive a presentation. Typically, at least some of the client sites 54 are sufficiently geographically dispersed so that a face-to-face presentation is not possible. Additionally, note that each client site 54 has at least one of a client node 56 (e.g., a personal computer), and a telephone 62, wherein the client node 56 may receive video (and possibly audio as well) information from a communications network 70 such as the Internet, and the phone 62 may be used for

fuboTV Media Inc.
Exhibit 1015
Page 056

receiving an audio portion of the presentation routed separately through one or more voice grade telephony networks (collectively labeled 74). Accordingly, if the client node 56 is resident at a client site 54, then a network interface software package is required for receiving, e.g., video presentation information from the communications network 70 (e.g., including the Internet). For many networks (such as those including the Internet), this software package includes a network browser 78 such as the Internet browsers offered by Microsoft and Netscape, together with a client presentation software system 88 that coordinates with the browser 78 for requesting, receiving and displaying presentation segments (from the network 70) as appropriate during the presentation.

(4.2) Leader Stations 92: One or more presentation leader stations 92 that provide the leader(s) of a presentation with the ability to control the content of the presentation, the pace of the presentation, and any interactive communication with and between presentation audience members. Note that each leader station 92 includes the client presentation software 88 and a network browser 78 so that each leader can also view the

presentation as it is perceived by audience members. Additionally, the leader station(s) 92 also have leader-specific presentation application software 94 for allowing a leader to control and direct a presentation.

Note that each leader station 92 is connected to components of the operations center 58 either through the communications network 70, or directly using a 28.8 kilobits per second or ISDN 128 kilobit dial-up phone connection. The operations center 58 amplifies a presentation leader's scope of control using Internet Standard protocols (e.g., TCP/IP, FTP, etc.) to simultaneously transmit commands to a large group of clients. There may be one or more leader stations 92 per presentation performance. The leader tasks can be divided among a plurality of leader stations 92 to create, e.g., moderator, presenter, and show-control leader stations. These leader stations 92 may be co-located or geographically dispersed.

(4.3) Operations Center 58: An operations center 58 for coordinating, at least at a high level, presentation start-up and presentation communication under the direction of a presentation leader at a leader station 92.

fuboTV Media Inc.
Exhibit 1015
Page 058

(4.4) Content Webservers 96: One or more content network server sites 96 (also denoted content webservers 96a, and alternate content webservers 96b) for providing presentation data to client sites 54 requesting such data via client nodes 56. Note that for the client sites 54 illustrated, the content webservers 96a represent the presentation information suppliers of first choice. However, if difficulties (or expected difficulties) are encountered at one of the client sites 54 regarding receiving presentation segments prior to their time for display, then the client presentation software 88 at the client site is capable of requesting, via the browser 78 at the client site, presentation segments from an alternate content webserver 96b prior to or during the presentation.

(4.5) Phone Bridge 100: One or more phone bridges 100 for supporting voice communication during a presentation is provided. The phone bridges 100 route the audio portion of a presentation to certain client sites 54, thereby providing communications between the leader(s) and the audience members, and also providing communication between the audience members themselves.

fuboTV Media Inc.
Exhibit 1015
Page 059

Each phone bridge 100 receives its commands via a direct dial up phone connection from a phone bridge control 240 (discussed hereinbelow). The present invention may utilize a variety of phone bridges 100 to deliver audio and collect responses (e.g., voting by audience members on presentation presented issues). Note that each phone bridge 100 is enabled either directly through an application program interface (API), or by simulating a remote operator for the phone bridge. Some embodiments of the present invention utilize the following features provided by the phone bridges: an interactive mode, an audio only mode, call-back mode, and sub-conferencing (virtual conference table) mode, wherein these terms may be defined respectively, as: the leader and audience members are able to speak simultaneously to all presentation participants (interactive mode), the leader speaks to all audience members while all audience member phones have muted microphones (audio only mode), the phone bridge calls audience members (using a phone number provided via presentation registration and/or a connection with the client presentation software 88 at the client's client node) for connecting for the audio portion

fuboTV Media Inc.
Exhibit 1015
Page 060

of the presentation (via, e.g., the public switched telephone network) (call-back mode), subgroups of the audience and/or leaders are in the interactive mode with each other while in audio mode for the presentation performance (virtual conference table).

In cases where the presentation audience is mixed, with some members participating via teleconferencing or video conferencing and others viewing the presentation, voting for those who do not have an interactive network 70 connection can be accomplished with phone 62 pulse responses to one of the phone bridges 100. In particular, these votes can be transferred to the operations center 58, and (as with any audience member responses) optionally transferred to the profile database 120 described hereinbelow. Note that at the leader's discretion, a phone bridge 100 can be used to implement a help desk, wherein audience members requesting help before or during a presentation can be connected with a help desk operator for technical or customer support. The phone bridges 100 can also be used by the leader to implement subconference chat groups for localized question

fuboTV Media Inc.
Exhibit 1015
Page 061

and answer sessions following a presentation performance.

(4.6) Content Manager 104: A content manager system 104 for managing presentation scripts and data. The content manager 104 logs and confirms the locations and addresses of content webservers 96 where the content for each presentation will reside. The content manager 104 distributes presentation data, such as scripting information for a presentation, thereby providing:

(a) initial groupings of audience members according to, e.g., natural language preferred, organizational affiliation, geographical location, and/or intervening network connections and devices (e.g., firewalls and other security features, local area network connections), and/or

(b) sequencing of presentation segments to the operations center 58 (and more particularly, the host(s) 200 described hereinbelow).

Additionally, the content manager 104 distributes presentation content (e.g., presentation segments) to the content webservers 96 and verifies that the content is capable of being presented to audience members immediately before a presentation time. Note that the verification

fuboTV Media Inc.
Exhibit 1015
Page 062

process makes sure that all the links in the presentation or show can be resolved appropriately. Finally, at the end of a presentation performance, the content manager 104 may remove the presentation content from one or more of the content webservers 96.

Further note that the content manager 104 includes a reservation system 108 for maintaining a schedule for presentation and for reserving resources of the operations center 58, and any presentation leader support such as leader stations 92. The content manager 104 also includes an invitation subsystem 112 that is capable of maintaining invitation lists of candidate audience members, together with corresponding addresses (e.g., e-mail addresses) for various presentation performances. Additionally, the invitation subsystem 112 is capable of accessing client profile information for past audience members residing in the profile database 120. Accordingly, by comparing client profile information in the profile database 120 with the information in various invitation lists, and/or presentation descriptions (e.g., keywords, etc.), prospective audience members for a particular presentation can

fuboTV Media Inc.
Exhibit 1015
Page 063

be notified of future similar presentations via, e.g., e-mail.

Additionally, the content manager 104 is also responsible for accessing and maintaining a show content archival database 126. Thus, following a live presentation performance using the present invention, the content manager 104 is capable of downloading the presentation content from the various content webservers 96 as well as presentation information retained in the operations center 58 into the show content archival database 126 for storage and/or possible replay. Note that the audio portion of a presentation is stored as a single continuous recording made by one of the phone bridges 100 during the presentation. Further note that the presentations stored in the show content archival database 126 are capable of being transmitted to various network 70 sites for subsequently time-delay delivery if desired.

(4.7) Software Download and Client Support System 130: The present invention includes a software download and client support system 130 for providing presentation enabling software (e.g. client presentation software 88) to both client sites 54 and leader stations 92. Additionally, the software

fuboTV Media Inc.
Exhibit 1015
Page 064

download and client support system 130 supplies presentation software to the leader stations 92 that allows leaders to control and direct their presentation performances. Finally, the system 130 provides client support via, e.g., the telephony network 74.

(4.8) Pre-show Control System 136: A pre-show control system 136 for providing audience members and potential audience members with presentation related information both for registering for presentation performances and for establishing initial network (70 and/or 74) connections immediately prior to a presentation performance, so that presentation content can be provided to each audience member's client site 54. Thus, the pre-show control 136 provides audience members and prospective audience members with presentation booking information such as presentation topics, presentation performance dates, times, identification of leaders and/or lists of participants. Further, the pre-show control 136 also provides presentation content and script information to the operations center 58. Within the pre-show control subsystem 136, there is a registration module 140 and an associated network

fuboTV Media Inc.
Exhibit 1015
Page 065

interface (not shown), wherein audience members confirm their registration for a presentation performance, via, for example, network 70. Note that confirmation of presentation performance registration includes, if necessary, a download of presentation specific software that provides a client with an icon on the client's client node 56 as a reminder of the scheduled presentation performance date and time for which the client has registered. Further, if the presentation for which the client has registered requires one or more software audio or video software systems, then the downloaded application software checks for these systems on the client's client node 56 and subsequently advises the client if one or more of the software systems required must be downloaded prior to the presentation performance.

Further note that the presentation application software downloaded to a client node 56 from the registration module 140 may be used for: configuring the client node 56 appropriately for the subsequent presentation performance, running tests at the client node for assuring that the presentation will be presented properly, allowing the client node to pre-load certain content

fuboTV Media Inc.
Exhibit 1015
Page 066

portions of a presentation, and/or providing the client with access to the lobby system 144 (discussed hereinbelow) for establishing initial network (70 and/or 74) connection(s) immediately prior to a presentation performance.

Note that the software application downloaded from the registration module 140, in one embodiment, also allows a client to preview highlighted web pages of the upcoming presentation. Moreover, this software may allow the client to reconfigure and re-test his/her client node 56 for determining whether a desired configuration has been provided for a presentation performance.

Regarding the lobby system 144 also contained in the pre-show control 136, the lobby system provides the initial connection point(s) for the audience members immediately prior to a presentation performance for which the audience members have registered. Accordingly, once network 70 and/or 74 connections have been established, the lobby system 144 connections are transferred to the operations centers 58 at commencement of the presentation performance.

(4.9) Accounting System 150: In one embodiment, an accounting system 150 is provided for the present

fuboTV Media Inc.
Exhibit 1015
Page 067

invention for managing its financial operations. In particular, the accounting system 150 includes a billing system 154 for maintaining a chart of accounts for both billing clients (and/or their affiliated organizations) having received a presentation, and billing presentation leaders (and/or their affiliated organizations) requesting the services of the present invention for distributing performances of their presentations. Additionally, the accounting system 150 also includes a reporting subsystem 158 that outputs reports related to presentation performances, to clients and presentation leaders.

Referring now to the operations center 58, a high level internal structure of this component will now be described. This component includes one or more host modules 200 for coordinating: (a) the dissemination and timing of presentation content under the direction of a presentation leader(s), (b) the interactions between the leader(s) and the audience members as well as between members of the audience themselves, (c) the gathering of feedback information from audience members according to, for example, answers to questions posed to the audience members during a presentation performance, and (d) providing results from audience participatory responses to the leader(s) and/or audience

fuboTV Media Inc.
Exhibit 1015
Page 068

members. Accordingly, note that in one embodiment of the present invention, the computer on which a host 200 is resident has the following features: 64 megabytes of RAM, 166 MHz Pentium processor, NT operating system, Ethernet network card, in a configurable CUBIX backplane available through CUBIX, Inc., 2800 Lockheed Way, Carson City, Nevada.

Each such host 200 is capable of managing one hundred or more interactions with clients and/or subordinate hosts 210 wherein the subordinate hosts are distributed on the network 70 to thereby increase an operation center host's span of control by 100 or more clients and/or further subordinate hosts per subordinate host to create an unlimited audience. Note that each host 200 receives presentation script information from the content manager 104 in preparation for initiating the performance of a presentation. Further, each host 200 receives from the lobby system 144 audience member identifications for each presentation performance controlled by the host immediately prior to the performance of the presentation. Note that each such audience member identification typically includes: (a) a unique six digit client identifier which is encoded into the client presentation software 88 for each presentation performance client, and (b) a three digit group identifier for assigning one or more webservers 96 to provide presentation content.

fuboTV Media Inc.
Exhibit 1015
Page 069

Note that the software download and client support system 130 encodes these two identifiers into the client presentation software 88 prior to distribution to client nodes 56.

The host 200 also receives content webserver 96 identifications, and presentation script identifications from a show scheduler 204. This scheduler 204 provides the functionality of the present invention for scheduling presentation performance times and the resources needed for performing each presentation. Thus, the show scheduler 204 provides the pre-show control 136 with scheduled show times and dates, and, as mentioned above, provides a host 200 responsible for a presentation with content webserver 96 identifications and presentation script identifications immediately prior to the performance of the corresponding presentation. Note that in the embodiment of Fig. 1, the show scheduler 204 may be utilized to reserve resources at various content website servers 96 as well as phone bridges 100 in addition to other resources of the operations center 58. Note also that the show scheduler 204 provides show schedule data to a security system 208, this latter system described hereinbelow. However, in other embodiments of the show scheduler 204, resources may be allocated for a presentation according to the number and geographical locations of clients desiring to participate in a particular presentation.

fuboTV Media Inc.
Exhibit 1015
Page 070

For each presentation performance, the presentation controlling host 200 also receives, from a presentation performance specific resource file or data base 212: (a) content webserver 96 network addresses (e.g., for the Internet, these addresses being URLs) identifying the network 70 sites having presentation content data; (b) audience member lists of clients that have registered for the presentation performance and can therefore become audience members, if they choose to; (c) groupings of registered clients; and (d) script names and locations from which to retrieve the presentation script from the content manager 104. Accordingly, note that the records of the corresponding resource file 212 associate presentation identifiers with content webserver 96 URLs and path names on these webservers where presentation content data resides. Thus, since the presentation scripts received by the hosts 200 from the content manager 104 are generic in that the scripts have variables or placeholders for content webserver 96 identities, each host 200 uses information from the corresponding resource file 212 (retrieved according to presentation identification) for resolving the undefined content webserver variables of the generic scripts, and thereby instantiating presentation scripts and presentation data with specific content webserver 96 references. Note that the resource file 212 may be created from information in a scheduling data base (not shown) populated with, e.g., content

fuboTV Media Inc.
Exhibit 1015
Page 071

webserver 96 groupings (each grouping for supplying presentation content to a particular group of audience members) and audience member group identifications. The grouping of the webservers and the audience member groupings are both indicated by the three digit group identifier also encoded into each copy of the client presentation software 88 distributed by the software download and client support system 130 as previously discussed.

Each host 200 also sends commands to an audio system 220 for controlling presentation audio content that has been previously recorded for performance of the presentation to which the audio content is associated. In particular, a host 200 controlling a particular presentation sends audio presentation coordinating commands that direct and control the audio system 220. The audio client 224 provides the following functionality in response to host commands. The audio client 224 may (a) utilize a plurality of specialized audio players 236 depending on the audio compression of the audio portion of a presentation to be provided to the client sites 54 via the phone bridge 100, and/or via the network 70 in an alternative embodiment, (b) establish a connection to the audio server 228 at a specified network 70 location (note that in one embodiment the audio server may be accessible as an addressable node on the network 70), and (c) start, pause, resume, position within, and stop an audio playback with an

fuboTV Media Inc.
Exhibit 1015
Page 072

identified audio file or stream. Note that in performing the functionality described above, the audio client 224 may receive the following types of commands from a host 200: a network 70 node address (URL) containing the location and the name of an audio file or stream, and the current state wherein the possible states are: playing at a particular position, paused, or stopped.

The audio client 224 controls at least two other modules of the audio system 220, in particular, the audio server 228 and the audio player 236. For a presentation to be performed, the audio server 228 is preloaded with audio presentation data by the content manager 104 prior to the performance of the presentation. The audio server 228, in turn, supplies the audio portion of selected presentation segments to the audio player 236 as directed by the audio client 224. Accordingly, the audio player 236 prepares the audio information for output to one or more of the phone bridges 100. More particularly, the audio player 236 performs the following functions: (a) receives audio IP from the audio server 228, (b) buffers IP packets received from the audio server, (c) decodes compressed audio data from IP audio packet, (d) controls an audio device (computer card) to create analog, line level, or direct public switched telephone network (PSTN) output audio signals. Thus, at the request of the audio client 224, the audio player 236 outputs audio segment information to an audio client 224

fuboTV Media Inc.
Exhibit 1015
Page 073

designated phone bridge(s) 100 for subsequent transmission to identified client sites 54, thereby providing presentation audio to clients in real time during a presentation performance. Thus, the hosts 200 and the audio system 220 coordinate so that the pre-recorded audio portions of each presentation are delivered to the phone bridge(s) 100 and distributed to the client sites 54 in a coordinated manner with corresponding video and/or graphic presentation segments.

It is important to note that several variations of presentation content can be provided to clients based on the available bandwidth on network 70, as well as adjunct networks of various kinds that coordinate with network 70 for transmitting presentation information to client sites 54; e.g., such adjunct networks may be local area networks, virtual private networks, and corporate intranets. Further, note that the audio client 224 can direct the audio server 228 and the audio player 234 to supply corresponding pre-recorded audio versions of presentation segments in different languages. Accordingly, the audio player may simultaneously output to one or more of the phone bridges 100 a plurality of different audio versions of pre-recorded materials for a presentation that are in different languages.

Each host 200 also directs the operation of the one or more phone bridges 100 via a phone bridge control module 240. The phone bridge control module 240 provides an interfacing

fuboTV Media Inc.
Exhibit 1015
Page 074

control system between the host 200 and the phone bridges 100 so that details of particular phone bridge 100 control commands and details of operations of phone bridges 100 need not be embedded in host 200 system software. Accordingly, under the direction of commands from the host 200, the phone bridge control module 240 is capable of directing one or more phone bridges 100 to provide the following types of audio transmissions during a presentation:

(5.1) Direct phone bridge(s) 100 to route various audio presentation portions to particular client site phones 62 as well as leader stations 92;

(5.2) Establish appropriate telephony connections so that an audience member can address all presentation participants;

(5.3) Establish one or more audio subgroups from the collection of audience members of a presentation. In particular, for some types of presentations wherein periodic conferring among subgroups is deemed advantageous, such audio subgroups can be considered as a vehicle for providing subconferencing capabilities;

(5.4) Assuming that subconference groups of audience members are capable of being provided by the phone bridge(s) 100, the phone bridge control 240 is able, if directed, to configure the phone bridge(s)

fuboTV Media Inc.
Exhibit 1015
Page 075

for allowing a subconference group to address all audience members and subsequently return to conferring privately among the audience members of the subconference;

(5.5) Instruct the phone bridge(s) 100 to monitor telephone lines of audience members for input regarding answers to questions posed to audience members and whose responses are provided via the pressing of digits on phones 62 at client sites 54;

(5.6) Enable full interactive audio to all audience members where each audience member is capable of speaking to other presentation performance participants.

(5.7) Place a single audience member or the entire audience into audio (listen only) mode without deactivating the audio presentation performance from the audio system 220.

Each host 200 is also in communication with the security subsystem 208 referred to hereinabove. Note that all external communications from third parties to a host 200 is routed through the security subsystem 208. This subsystem provides various kinds of communication security measures such as:

(6.1) A data packet filtering router (not shown) for filtering out network 70 communications from unknown network 70 sources;

fuboTV Media Inc.
Exhibit 1015
Page 076

(6.2) A communications protocol and port-specific firewall (not shown) for rejecting certain communications addressed to specific ports unless the communications are provided in a particular protocol such as HTTP, HTTPS, or FTP;

(6.3) An encryption tunnel (not shown) for encrypting communications to be transmitted on the network 70 (via the internal webservers 248 that interface with the network 70), and for decrypting communications received from the network 70 (via the internal network servers);

(6.4) A validation subsystem (not shown) for validating participants requesting access to operations center 58 resources. Validations performed here includes validating presentation performance identifiers provided by client site 54 network 70 addresses, passwords provided by clients, and client presentation software 88 embedded identifiers; and

(6.5) Virus detection software.

Note that the security subsystem 208 resides on a separate computational device from that of the host 200. Further, note that the security subsystem 208 may translate network 70 received communications into a proprietary protocol before sending such communications to other components of the operations center 58. Moreover, for network 70 communications

intended for different operations center processes and/or related to different presentation performances, different levels of security may be implemented. Thus, network 70 communications for one presentation performance might include only minimal protection such as virus protection and protocol translation prior to transmitting communications to, e.g., the host(s) 200, or to the internal webserver(s) 248. Alternatively, at an opposite extreme, wherein high security is desired for a presentation, all of the features (6.1) through (6.5) may be performed for communications received form the network 70, and at least encryption is performed for communications transmitted across network 70 to, e.g., client sites 54.

The present invention also provides and/or facilitates further security features. For example, for corporations that want to guarantee the security of their data during network presentations, the distributed server architecture of the present invention allows for content webservers 96 to be placed within a secure corporate intranet 260. More particularly, such content webservers 96 may be behind a firewall 264, such that the firewall is between such content webservers and the presentation controlling host(s) 200. Thus, proprietary corporate data may reside behind the firewall 264 while presentation control may be performed externally.

fuboTV Media Inc.
Exhibit 1015
Page 078

Additionally, data access security can vary according to the needs of the presentation participants and/or their affiliated organizations. Thus, at one extreme, there is substantially no data security for the presentation data. Accordingly, the data may be available to anyone who knows a content webserver's network 70 address. This security level is similar to publishing data by creating World Wide Web pages on web sites and, in fact, presentations performed using the present invention can use actual World Wide Web websites as a source for presentation data.

A simple physical security capability may be used by the present invention for protecting presentation data by controlling the time span for which the data is accessible to clients. This involves keeping the data inaccessible when a presentation is not being performed. For example, presentation data may be maintained on private content webservers 96 or in private directories until near show time, making such data available at show time, and removing the data after the presentation performance terminates. Various aspects of this time based data management capability are directed by the show scheduler 204 for the operations center 58 and the content manager 104. In particular, the show scheduler 204 may keep presentation data residing within the operations center 58 inaccessible to other components of the operations center as well as to the pre-show control 136.

Additionally, the content manager 104 may prohibit access to presentation data on content webservers 96 by providing the data on the webservers substantially only during the presentation, and/or changing accessibility permissions on presentation data previously provided on the webservers so that it is substantially only available during a presentation performance.

For an intermediate level of physical security, presentation data can be located on operations center content webservers 96 (either internal to the operations center or external thereto) that require passwords, do not allow overwriting of data, and are not used for unsecured data. For high security, the intermediate security measures may be enhanced by recording each client's identity and/or network 70 address as they connect to a host 200. Furthermore, the high security measures may only allow network 70 connections from pre-approved network addresses using a specified protocol and port number for the duration of a particular presentation for which the client is registered.

In addition to any physical security methods as discussed hereinabove, presentation data can be encrypted prior to network transfers in any manner which the clients' browsers 78 can (with plug-ins) decrypt. Assuming the network 70 is the Internet, the operations center servers 248 support common gateway interface (CGI) and Internet information server (IIS)

extensions for processing URLs and a presentation can implement standard web data security by using Internet protocols such as file transfer protocol (FTP) with user identification plus password, and hypertext transport protocol secure (HTTP). Also note that the security measures for the present invention are not restricted to providing communications on generally used port numbers (e.g., communication between the host and leaders or audience members can occur on either port 60 or port 80 in any combination for a single presentation performance. Note that special security presentation performances can be run using any port number desired when using servers 248 in the operations center, or on intranets. (e.g., the secure corporate intranet 260). For dynamic data generated during a presentation (e.g., data collected from audience member responses), the HTTPS protocol is useful, even in an otherwise unsecured presentation, for transmitting questions, collecting response, and returning results through a secure sockets protocol. In particular, the HTTPS protocol provides an encryption method generally accepted as secure enough for transmission of sensitive financial data over public networks. Accordingly, this provides security for collected client information because the response data is transferred to a host 200 in an encrypted format. Furthermore, the presentation performance controlling host 200 protects the received data by not sharing it, and the

host 200 does not support standard network 70 (Internet) data access protocols.

Additionally, note that the presentation controlling host 200 is secured separately from the presentation data security. In particular, each host 200 executes on a server within the operations center 58, wherein the host will only accept a network 70 connection from a client node 56 having the appropriate version and/or identification for a presentation being controlled by the host. Moreover, the client and/or the client's presentation software 88 must be able to access the host 200 through its network 70 address and present the correct presentation identification at the time of the presentation performance.

Since the show scheduler 204 selects the host 200 from a plurality of such hosts and also selects the time window for each presentation performance, several other security measures may be implemented for a presentation performance including: restricted access to the client presentation software 88, uniqueness of each presentation performance identification, encoding of the network 70 (Internet) address of the host for the presentation and scheduling the date and time of the presentation. Note that the show registration system 140 facilitates these security measures in the show scheduler 204 by providing encoded presentation invitation network addresses (URLs) to clients and/or their client nodes 56. Further,

fuboTV Media Inc.
Exhibit 1015
Page 082

addresses of clients for a particular presentation may be sent to each of the content servers 96 having data for the presentation. Thus, when such a content server 96 receives a presentation data request from a client node 56, the client's address, the presentation identification, and the presentation performance schedule time may be validated at each content webserver 96 accessed.

The degree of security placed on presentation performance invitation distribution and the verification of invited presentation participants by each content webserver 96 is selected by a sponsor of the presentation. Note that the invitation system 112 does not have a direct data connection to the show scheduler 204. Thus, accidental release of sufficient presentation performance information to allow unauthorized access to a presentation performance is unlikely.

Additionally, to provide for dual path information security (e.g., to and from the operations center 58), the presentation software 88 can also require a password for activation, wherein the password is unique to the client and/or unique to a particular configuration of the client's client node 56 and wherein the password may be manually entered immediately prior to a presentation connection to a host 200. Note that for presentations using data secured within a secure corporate intranet 260, the client host connections can transmit encrypted network 70 addresses.

fuboTV Media Inc.
Exhibit 1015
Page 083

Since each host 200 does not have access to presentation resources (e.g., invited client lists, content webserver 96 addresses, presentation thumbnail images, sign-on passwords, phone bridge 100 type and presentation scripts) until the show scheduler 204 sends them to the host 200 with the presentation startup commands, or a leader for the presentation adds resources to an active presentation performance, it is remote that sensitive and/or proprietary presentation data can be accessed through a host 200. Moreover, a sponsor can create and perform a presentation without the presentation content data ever residing at the operations center 58. Further, in cases where interactive response data received during a presentation performance is considered extremely sensitive, the sponsor may process the client responses at sponsor controlled network sites and subsequently, if desired, forward statistical summaries to the presentation controlling host 200 for any desired distribution to audience members.

Regarding security and presentation leaders, the leader(s) of a presentation can be verified by use of one or more passwords in addition to the host 200 address, port number, presentation identification, and presentation performance time for his/her presentation performance. Note that such leader passwords may be unique to each presentation performance and may be supplied to the presentation controlling host 200 by the show scheduler 204 immediately

fuboTV Media Inc.
Exhibit 1015
Page 084

prior to the start of a presentation performance for thereby validating presentation leader(s). Additional leader information may be also provided to enable multiple leaders for a single presentation performance and to also enable different presentation control functions to be allocated among leaders according to their presentation passwords.

The leader software 94 may be distributed to presentation leaders and/or leader stations 44 by diskette or by a network 70 download. This software may be generated with built-in addresses and presentation identification numbers as well as particular ports for connecting to the presentation controlling host 200. Note that since presentation leaders have access to various resource usage, supply and change capabilities, additional security measures may be applied to leaders and the leader software 94. In particular, for leaders connecting through the network 70 (Internet), an encryption tunnel (not shown) can be established on the leader host connection, wherein such an encryption tunnel provides encapsulation of a proprietary high security protocol within the IP protocol. Further, to provide secure, high reliability connections directly to a leader, the operations center 58 maintains several dial-in lines which may be used at 28.8 kilobits per second or ISDN rates (e.g., of up to 128 kilobits per second). Note that connections on such dial-in lines are also usable by presentation audience members at the leader's

fuboTV Media Inc.
Exhibit 1015
Page 085

discretion if their client identifiers are available to the operations center 58 from the content manager 104 after the leader connection is accepted.

If the above described security features are utilized by the present invention, then it is able to deliver a presentation performance with any mixture of security levels between the two extremes of: (a) no security processing of transmitted audience member responses, show data content, or presentation data locations, and (b) full security processing with only invited audience members, securing all audience member responses, storing and protecting the presentation data content, and securing the connection between each leader or audience member and the presentation controlling host 200. Furthermore, the security of the operations center 58 may be audited using hacker prevention tests and virus detection and prevention methods as one skilled in the art will understand.

Figs. 2A through 2D represent a flowchart of the high level steps performed by the network presentation system 50 the present invention. In particular, this flowchart illustrates the high level steps performed for both initiating and operating a presentation for audience members at clients sites 54. Accordingly, in step 404, prior to the scheduled time of a presentation performance, the show scheduler 204 supplies the host 200 assigned for controlling the presentation with an identifier that uniquely identifies the

fuboTV Media Inc.
Exhibit 1015
Page 086

presentation performance and provides with this identifier one or more passwords that can be used by the host 200 and/or the security subsystem 208 for identifying the leader(s) and clients that attempt to connect with the host 200 as presentation participants. Note that such connections to the host 200 will typically be through the security subsystem 208 and therefore be subject to various security measures discussed hereinabove to which the presentation and its participants are subject. Subsequently, in step 408, the host 200 uses the presentation performance identifier to request the one or more scripts for the presentation from the content manager 104. Note that the presentation scripts provide: (a) identification of segments to be presented during the presentation, (b) sequencing information regarding the order of presentation of the segments, (c) alternative versions of various segments and/or collections of segments that may be by the leader(s) of the presentation. Note that further description of presentation scripts and their representations are provided hereinbelow. Also note that the presentation performance identifier is used by the content manager 104 for retrieving the presentation script(s) from the show content archive 126 for thereby returning the presentation script(s) to the host 200. In step 412, each leader for the presentation logs onto the host 200 by supplying appropriate validation information such as a password and presentation

fuboTV Media Inc.
Exhibit 1015
Page 087

performance identifier. Further, if there is more than one leader, then additional leader identifying information may be required for differentiating the roles of various leaders for the presentation.

In step 416, the pre-show control system 136 accepts network 70 and/or network 74 connections by candidate clients for the presentation performance. Note that it is assumed that the clients have previously registered for the presentation performance with the registration module 140 and therefore have been provided with validation information (e.g. a presentation performance identifier and/or password) for validating each client as an audience member for the presentation. Subsequently, in step 420, a determination is made by the pre-show control system 136 as to whether each candidate presentation audience member is connected to the pre-show control system by the communications network 70 or by the telephony network 74. If it is determined that a candidate presentation client is connected by the communications network 70, then step 424 is performed, wherein the candidate client logs onto the pre-show control 136 with a previously provided login. Note that this login may include a presentation performance identifier for the presentation and a password for identifying the candidate client as being registered for the presentation performance. Further note that in one embodiment, this step is performed by the lobby

fuboTV Media Inc.
Exhibit 1015
Page 088

system 144. Subsequently, in step 428, a determination is made by the pre-show control system 136 (or the lobby system 144) as to whether the entered login is valid. If the login is determined to be invalid, then step 432 is performed wherein the connection with the pre-show control system 136 is terminated. Note however, it is within the scope of the present invention that various retries can be provided as one skilled in the art will understand. Alternatively, if the candidate client's login is determined to be valid, then step 436 is performed wherein the pre-show control (determines whether the client's client node 56 is configured appropriately for the presentation performance). In particular, the pre-show control system 136 determines whether the client presentation software 88 is operable on the client's client node 56. Further, the pre-show control system 136 may also determine whether the client's client node 56 has the appropriate network 70 addresses (e.g. URLs) of the content webservers 96 available for supplying presentation segments to the client node.

Subsequently, assuming the client's client node 56 is appropriately configured for the presentation performance, in step 440, the pre-show control system 136 transfers the client's client identifier and network 70 address to the host 200. Following this step, in step 444, when the time for the presentation arrives, the client's client presentation

fuboTV Media Inc.
Exhibit 1015
Page 089

software 88 via the network 70 establishes a network 70 connection between the client's client node 56 and the host 200 controlling the presentation performance. Note that such activating may be performed during the client's login session with the pre-show control system 136 if such occurs within a few minutes of the start of the presentation. After the host 200 is contacted, it instructs the client presentation software 88 to establish a connection with one of the internal webservers 248 for dynamic content.

Additionally note that the lobby system 144 substantially provides the functionality for the present step (step 444). In particular, the lobby system 144 may maintain the login session connection until the time for commencement of the presentation performance. Moreover, the lobby system 144 may provide the client with excerpts of other presentations as well as advertisements and/or other informative material.

Following the activation of a connection between the client node 56 and a presentation controlling host 200, in step 448 the client presentation software 88 is instructed by the presentation controlling host 200 (hereinafter for simplicity referred to as the "host 200") to retrieve and cache, via network 70, one or more initial presentation segments from identified content webservers 96 where the presentation segments have been pre-stored. Note that the initial presentation segments (as well as subsequent

fuboTV Media Inc.
Exhibit 1015
Page 090

presentation segments) may be different for clients at different client sites 54. In particular, the segments provided may depend on network 70 transmission rates, client natural language preferences, unique organizational displays and/or data (corporate logos and/or confidential financial data), and configurations of client nodes 56 (e.g. the software and/or hardware).

Returning now to decision step 420, if this step determines that the client's connection is via the telephony network 74, then in step 450, the pre-show control system 136 requests that the client enter an acoustic login via digits on the telephone 62 at the client's client site 54. Note that clients that login through telephony network 74 may intend to participate in only the audio portion of a presentation performance. However, clients who login in this manner can subsequently log in to the pre-show control system 136 via a network 70 connection and obtain a multimedia performance of the presentation.

In step 452, the pre-show control system 136 determines if the acoustic login is valid. If not, then in step 456 the call is terminated. Alternatively, if the login is deemed valid, then the pre-shown control system 136 determines the level of presentation to which the client has been assigned. In particular, the client may be assigned to an audio presentation or alternatively to a multimedia performance of

fuboTV Media Inc.
Exhibit 1015
Page 091

the presentation. Thus, if the client has been assigned to obtain a multimedia presentation via the network 70, then in step 464 the pre-show control system 136 automatically performs any necessary pre-show housekeeping tasks for thereby allowing a more expedient network 70 login by the client for obtaining the multimedia performance of the presentation. Note that in particular, any financial transactions prior to the presentation such as credit card number transfers and/or a change of the location of the client's site 54 may also be performed during the present step. Moreover, it is also an aspect of the present invention that speech recognition modules can be used for interpreting client input. Further, note that the tasks performed in step 464 may also be performed by registration module 140 during registration for the presentation, such registration potentially occurring substantially prior to the performance of the presentation. Additionally, regardless of the flow of control path taken from step 460, step 468 is encountered wherein at the time to commence the presentation performance, the pre-show control system 136 requests that the host 200 transfer control of the client's telephony call so that it is controlled by the control bridge controller 240 for receiving the audio portion of the presentation performance. Subsequently, regardless of whether the client is to receive the presentation performance via network 70 and/or network 74, step 472 is performed

fuboTV Media Inc.
Exhibit 1015
Page 092

wherein the host 200: (a) activates the leader software 94 on the leader station(s) 92 used in controlling the presentation performance; and (b) activates the client presentation software 88 at the leader station(s) 92 for viewing the presentation performance as an audience member will.

Subsequently, steps 474 and 476 are performed concurrently wherein each client having a client node 56 has its client presentation software 88 in a wait state waiting for a presentation command(s) from the host 200 via the network 70, while in step 476, the leader(s) for the presentation performance determines the first collection of corresponding presentation segments and transmits the identity of the selected collection to the host 200. Note that there can be more than one version of the presentation from which the leader can select segments for presenting to the audience members. Further, note that of the versions being selected, the present invention may automatically select subversions to be provided to various audience members depending upon, e.g., data rate transmissions by the network 70 from content webservers 96. However, it is also an aspect of the present invention that the leader(s) may override the automatic selection of subversions of a presentation performance and/or mandate that a particular subversion be provided to various audience members. In particular, this can be accomplished by: providing only one rendition of source material such as a high

fuboTV Media Inc.
Exhibit 1015
Page 093

resolution corporate logo and leaving all alternate resource fields of the script blank and providing only one "level" of scripted resources for that presentation collection, as will be discussed in further detail hereinbelow with reference to Fig. 3.

In step 480, if the leader station 92 providing the identity of the presentation segments is external to the operations center 58, then the security subsystem 208 checks the leader input for validity via, e.g., determining the network 70 address from which the identity of the selected presentation segments have been transmitted. Assuming that the transmission from the leader station 92 is deemed valid, in step 490, a determination is made as to whether the leader(s) has determined a next collection of one or more segments whose identities have been supplied to the host 200. In particular, the leader(s) may choose to identify such segments to the host 200, or indicate that the performance of the presentation to be terminated. Accordingly, if no other segments are determined and/or the leader(s) indicated presentation performance termination, then step 494 is performed wherein the presentation software 88 is removed from client nodes 56.

Alternatively, if an additional collection of segments is determined, then in step 500, the host 200 accesses the presentation script(s) with the leader supplied

fuboTV Media Inc.
Exhibit 1015
Page 094

identifications for the segment collection, thereby obtaining additional data items regarding the segments of the collection as will be further described hereinbelow.

Subsequently, in step 504, the host 200 accesses the resource file 212 for resolving virtual webserver names in the accessed segment collection for thereby providing actual content webserver network 70 addresses having at least the video versions of the presentation. Additionally, note that it is within the scope of the present invention that resource file 212 can also be accessed for resolving identifiers and thereby identifying a corresponding audio portion to be presented to audience members via the audio system 220 and the phone bridge(s) 100.

Following step 504, in step 508, the host 200 sends one or more commands to each copy of the client presentation software 88 indicating both the next collection of segments to be retrieved by the client nodes and the network 70 addresses of the primary and alternate webservers 96 from which to retrieve the segment collection.

It is important to note that the host may send substantially simultaneously a different set of commands to different client sites 56 depending on the characteristics desired for the presentation at each client site.

Since processing according to the present invention occurs at a presentation host controller 200 and

simultaneously at client nodes 56, during the processing steps 476 through 508 performed remotely from the client nodes 56, the client nodes as per step 474, may be prepared for accepting the next presentation commands transmitted by the host 200 in step 508. However, such host nodes 56 may be also concurrently providing various portions of the presentation performance to their respective audience members. In any event, when step 516 is encountered, the client nodes 56 have received the next host 200 transmitted commands and therefore the client nodes now enter a processing state whereby these nodes attempt to assure a timely caching of this next collection of segments for timely performance of their portion of the presentation.

In step 516, a determination is made by the client presentation software 88 at each client node 56 upon which the software is loaded, as to whether the next collection of segments indicated by the one or more commands transmitted by the presentation controlling host are presently cached on the client's client node 56. Note that this next collection of segments could have been previously cached at a client node 56 due to: directory cache commands for caching an entire file directory that was issued earlier in the presentation performance, provided by fixed media such as CD-ROM at the client nodes(s) 56, or re-use of presentation segments such as HTML page formats, background images, or logos.

fuboTV Media Inc.
Exhibit 1015
Page 096

Accordingly, if the next collection of segments is not cached on a client node 56, then step 524 is performed wherein the client presentation software 88 on the client node 56 uses its most recent network 70 data transmission characteristics together with the host 200 transmitted list of current network 70 addresses for content webservers 96 to select an appropriate content webserver and an appropriate version of the next collection of segments to be retrieved. Note that the selections determined in this step are performed with the goal of assuring that there is a high probability of this next collection of segments being delivered to the client node 56 prior to the time that this collection is to be used in the presentation performance on the client node. In particular, the following is a description of the steps performed in determining, from the network 70 data transmission characteristics, the content webserver 96 and the (sub) version of the next collection of segments to be retrieved. The selection of the webserver may be dependent upon the time allotted for the transfer and the network 70 transmission characteristics such as data transmission rate. The time for each network 70 transfer of a collection of segments (e.g., one or more presentation elements, each such element having one or more segments therein) is controlled by the host 200. The host 200 designates time according to at least one of the following categories: (a) no time, wherein the presentation

fuboTV Media Inc.
Exhibit 1015
Page 097

element(s) is to be displayed immediately, (b) indefinite, wherein the amount of time for transfer of the presentation element(s) is indefinite, and (c) a specific time interval indicated in a script command for the presentation, e.g., a "virtual time" command as indicated by commands (rows) of the script shown in Fig. 3 having values in the 620 column as will be discussed hereinbelow. Note that as the expected amount of time for retrieving one or more presentation elements lengthens, larger groups of presentation elements may be retrieved and/or better presentation quality presentation elements may be retrieved (e.g., the presentation quality may be enhanced from limited or no animation to full animation).

Additionally, the presentation element(s) selected is dependent upon network protocols such as HTTP and FTP. For example, as the size of the presentation data and the time for retrieval increases, the present invention tends to utilize FTP for network 70 transport. Alternatively, as the size of the presentation data and the time for retrieval decreases, the present invention tends to use HTTP.

Accordingly, in one embodiment of step 524, the size of each candidate collection of one or more presentation elements is determined from the webservers 96 by, e.g., requesting such sizes. As an aside, note that an indication of the bandwidth available with each such webserver can be determined if not available otherwise. Thus, if there is a primary webserver

fuboTV Media Inc.
Exhibit 1015
Page 098

96a and an alternative webserver 96b, and each has presentation versions for both HTTP and FTP as well as both having animated and non-animated interchangeable presentation elements, then an expected time for retrieving each available combination is determined. Subsequently, the candidate collection selected provides first, the highest quality presentation, and second, the largest amount of presentation data possible. Consequently, the expected times are used to select the webservers 96, the collection of presentation elements, and the transfer protocol to use in providing the selected collection to the client node 56.

In one embodiment, the following selection process is used to determine the expected times:

for each candidate collection of presentation elements:

(a) The size of the collection is determined.

(b) The size is divided by the bandwidth average for the last two minutes as measured from any network 70 transmission source. If the average bandwidth is not available, then a bandwidth from the most recent webserver is used.

(c) A protocol overhead factor is added to the result of (b) to account for the different overheads for each of the different protocols available on network 70 that may be used (e.g., FTP and HTTP).

fuboTV Media Inc.
Exhibit 1015
Page 099

(d) Select the highest quality collection of presentation elements available, and select the largest collection that can be transferred in the time available. Note that it is assumed that an indefinite time designation by the host 200 is viewed as time sufficient for any size of transfer.

It is worthwhile to note that in other embodiments of the present invention, additional network characteristics other than bandwidth may be used, as one skilled in the art will understand. In particular, such characteristics as network 70 error rates, fluctuations in bandwidth, or a predictive statistical expectation of bandwidth may be used. Additionally, note that such candidate collections of presentation elements can also be resident at the client node 56 since some portions of a presentation can be also distributed on CD-ROMs. Accordingly, step 524 of Fig. 2C (as well as other steps in the flowchart of Figs. 2) also may access a CD-ROM drive or other transportable storage media for various portions of a presentation. Also, it is noteworthy that if network 70 supports multicasting, then a plurality of client nodes 56 may have their presentation elements selected according to a single access rate (i.e., server data propagation to the network) and a single network transmission rate instead of performing individual presentation element selections.

fuboTV Media Inc.
Exhibit 1015
Page 100

Subsequently, in step 528, the client node 56 provides the identity of the selected webserver and next collection of segments to the client node's browser 78 and the browser, in turn, sends a network 70 request to the selected web server for the selected (subversion) of segments. Following this step, the client presentation software 88 monitors the time elapsed before transmission of the selected collection of segments is completed, and determines whether these segments are provided within an appropriate window of time that allows them to be presented during the performance of the presentation. Thus, in step 532, the client presentation software 88 determines whether the requested collection of segments is cached on the client node 56 within a desired time prior to the proposed performance of the collection of segments. In particular, for determining this desired time, a function dependent on one or more of: (a) various measurements related to one or more other client nodes 56 receiving the presentation performance, (b) a predetermined default length of time, as e.g., specified in the presentation script, and (c) a length of time determined by a leader of the presentation performance, e.g., during the performance. Regarding (a) above, note that measurements such as:

(7.1) network 70 transmission rates for each of one or more previous requests for presentation segments;

(7.2) for each of one or more previous requests for presentation segments, an elapsed length of time between the request time for the presentation segments and receipt of the segments;

(7.3) for each of one or more previous requests for presentation segments, a size (e.g., in bits) of the segments received from the request.

Note that there are various functions dependent on one or more of (a) - (c) immediately above that may be used as one skilled in the art will understand. Further note that such function may be as simple as a comparison of corresponding network 70 transmission rates between (a) the client node 56 and the webserver(s) with which it is communicating, and (b) other client nodes 56 and the webserver(s) with which they are communicating. Alternatively, such a comparison may be performed on the elapsed time as in (7.2). Note that there are at least two possible alternatives here:

(8.1) the present invention may attempt to retrieve the same collection of segments from an alternative content webserver;

(8.2) the present invention may attempt to retrieve an alternative collection of segments that can be used as a replacement for the initially requested segment collection from either the same webserver

fuboTV Media Inc.
Exhibit 1015
Page 102

96 for which the original request was directed, or from an alternative webserver 96.

Accordingly, if the collection of segments is not cached within this time, then step 536 is performed wherein the client presentation software 88 determines if there is sufficient time to retry obtaining the collection of segments or another collection of alternative segments prior to the time of their estimated performance.

If in step 536 it is determined that there is insufficient time remaining, then step 474 is again activated, wherein the client node 56 (and more particularly, the client presentation software 88) prepares for the next set of one or more presentation commands from the host 200. Note, however, that even though the portion of the presentation corresponding to the collection of segments are not retrieved in time for performance, it is an aspect of the present invention that if the audio portion of the presentation is provided through the separate telephony network 74, then there may be substantial continuity in the presentation regardless of whether a portion of the video for the presentation is displayed or not.

Alternatively, if in step 536 the client presentation software 88 determines that there is sufficient time for attempting a retry for obtaining the requested collection of segments, then step 524 is again performed, wherein the client presentation software 88 again evaluates the transmission

fuboTV Media Inc.
Exhibit 1015
Page 103

characteristics of the network 70 for selecting a content webserver 96 and subversion of the collection of segments so that there is again a high probability of the newly selected collection of segments being delivered prior to the time that these segments are to be presented on the client node 56. Accordingly, on such subsequent iterations for determining an alternative way to present a particular portion of the presentation, the following steps may be performed: The original calculation is again performed with new times and current bandwidth information usually resulting in selection of alternative segment collections that are smaller. An overall limit of three re-tries of any URL will force smaller alternative segment collections to be selected, or a message to the audience member stating that the network is not functional.

Returning now to step 532, if in this decision step it is determined that the requested collection of segments has been timely cached at the client node 56, then step 544 is performed wherein an evaluation of the network 70 transmission characteristics that occurred during the transmission of the collection of segments. In particular, the following characteristics are determined: average network data rate, the likely range of expected data rates (e.g. within a standard deviation of the most likely data rate), measurements regarding network errors and/or quality of transmission, total

fuboTV Media Inc.
Exhibit 1015
Page 104

elapsed time taken to complete the transmission of the collection of segments, and/or the size of the transmission.

Subsequently, in step 548, a determination is made as to whether a host 200 interrupt is detected that requests a halt to the presentation of the current collection of segments. Note that this step is provided as an illustration of interrupt processing that can be performed by the client presentation software 88. Note, however, that such interrupt processing may be performed between or during substantially any of the processing steps described herein that occurs on the client node 56. Also note that such host 200 interrupts are likely to be initiated by a leader for the presentation when the leader determines that, e.g., there should be a deviation in the script for the presentation performance. Thus, regardless of where a host 200 interrupt step is performed within the processing steps for the client presentation software 88, upon detecting this interrupt, the flow of control of the present flowchart returns to a point in the processing wherein the next steps performed are the steps 474 and 476 performed at: (a) the client nodes 56, and (b) the leader's station(s) 92 and the presentation controlling host 200.

Assuming that no host interrupt is detected in step 548, then steps 552 through 560 are iteratively performed until all segments of the current collection of segments are presented

fuboTV Media Inc.
Exhibit 1015
Page 105

to the client. Accordingly, when there are no further segments in the current collection, step 560 routes the flow of control back to the concurrent steps of 474 and 476 as discussed previously hereinabove.

Referring to Fig. 3, an illustration of a simple script description 600 is shown. Each of the rows 608 after the first column heading row describes a presentation action to be performed during a performance. Each column entry of each row 608 provides information related to the script action to be performed by the row. Following is a description of the data capable of being contained in each column.

A Script Level column 612 for identifying alternative variations of the presentation. For example, a first variation might be directed to the customers of a corporation, another variation directed to the sales representatives of the corporation, and yet another directed to the investors of the corporation. Thus, a single script may be used for a plurality of related presentations that have at least some overlapping content. Accordingly, in column 612, each digit within each row of the column identifies a presentation variation to which the row applies. Thus, row 608a is performed only in the variation of the presentation having a "1" in this column; e.g. rows: 608a, 608d, 608e, 608g through 608o. Similarly, a second variation of the presentation is performed using rows: 608b, 608d, 608f, through 608o.

Additionally, a third version is provided by rows: 608c, 608e, 608f through 608n. Note, the "END" identifiers in 608q designates the end of the script.

An item number column 616 is provided for labeling rows so that a presentation leader can transfer to the rows having a value in this column and proceed sequentially through the script from the labeled row to which the leader transfers. This allows the leader to skip and/or rearrange portions of a presentation performance. Accordingly, there are three rows to which a leader can transfer control, namely, rows: 608a, 608e, and 608o.

A "virtual time" column 620 is provided wherein values in this column set and reset a presentation performance timer so that, for example, some portions of a presentation will automatically be skipped if a performance of the presentation is running behind a predetermined performance schedule. In script description 600, there are four rows 608 where the presentation performance timer is reset, i.e. rows 608a, 608e, and 608j. Thus, for a presentation performance corresponding to script level 1, in row 608a, the timer is set to 0.00 and the subsequent rows 608 for script level 1 are sequentially performed until 608e is encountered, wherein a determination is made as to whether the timer has a value greater than one minute and one second. If this is the case, then the sequential rows (for script level 1) down to row 608j are

fuboTV Media Inc.
Exhibit 1015
Page 107

interpreted by the presentation controlling host 200, but no host commands are transmitted to either the client nodes 56, or the phone bridge control 240. Thus, it is as if the actions for these script rows are skipped. However, at row 608j, the timer is reset and each subsequent row 608 (of script level 1) is performed.

An Action column 624 is provided for designating an action to be performed (if any) during execution of a row 608. Thus, for row 608a, the host 200 instructs all client nodes 56 that a resource (e.g., a content file, or Web page) is available for downloading. Subsequently, for script level 1, row 608d instructs the client nodes 56 to cause their browsers 78 to display the resource. A list of actions that can be designated in the action column 624 are as follows:

(9.1) **client_Load** - Instructs all client nodes 56 that a resource is available for downloading in background processing.

(9.2) **client_Free** - Instructs all client nodes 56 to delete a previously downloaded resource.

(9.3) **client_Display** - Instructs all client nodes 56 to cause their browsers 78 to display a resource. This command implements "Extended" parameters when the Resource Location column 636 has a corresponding entry of "TWFTP". The extended

fuboTV Media Inc.
Exhibit 1015
Page 108

parameters are a second set of resource locations for retrieving the resource to which the corresponding action in the same row 608 is to be applied. For example, a second set of resource locations may be used by the client node 56 when it is determined that the FTP network 70 data transfer rate is unlikely to provide a particular presentation content file (e.g., of presentation elements) at a client node 56 in time for display.

(9.4) **client_play** - Instructs all client nodes 56 receiving presentation audio content via a network 70 to play a resource.

(9.5) **leader_Hold** - Causes the host 200 to suspend script interpretation until a next command is received from the leader designating a next row 608 to perform.

(9.6) **time_Set_At** - Forces a script's virtual time clock (i.e. timer) to a known value.

(9.7) **time_Hold_To** - Causes the host 200 to suspend script interpretation until a particular state is reached. For example, all clients report a display element command is complete; e.g., the display of a corporate logo.

fuboTV Media Inc.
Exhibit 1015
Page 109

(9.8) **child_Script** - Suspend this script, read and process another script in a manner analogous to a programming subroutine invocation.

(9.9) **End_Start** - Defines the last line (i.e. row 608) of a script and resets execution to the first line.

(9.10) **END** - Defines the last interpreted row 608 of a script.

Regarding the "Resource Type" column 632 of script description 600, the fields of this column provide an indication of the data types and/or organization of the presentation segment collections to which the action of the corresponding "Action" field of the same row applies. In particular, the following types (denoted also hereinafter as "resource types") are available:

(10.1) **FTP_File** - A single file to be pre-cached or downloaded from a webserver(s) 96 to client nodes 56 in the background using FTP or HTTP when FTP is blocked by security measures.

(10.2) **FTP_Dir** - An entire directory of files to be pre-cached or downloaded in the background using FTP or HTTP when FTP is blocked by security measures.

(10.3) **HTML_File** - A single HTML file containing presentation content.

fuboTV Media Inc.
Exhibit 1015
Page 110

(10.4) **MC_Question** - An HTML_File to which a client response to presented questions is requested.

(10.5) **MC_Answer** - An HTML_File to display the results of an MC_Question.

(10.6) **Info_Form** - An HTML_File to collect data for the profile database 120.

(10.7) **Audio_RaFile** - An audio file prepared in advance of the presentation, may be downloaded to client nodes 56 via network 70.

(10.8) **Audio_RaLive** - Live streaming of an audio file, via network 70, requires dynamic real time buffering at the client nodes 56.

(10.9) **THIS LINE** - Causes the host 200 to refer to the row 608 of the script having this value (i.e., "THIS LINE"). Thus, the action for the row having this value can be viewed as needing no presentation resources.

(10.10) **Twscript** - Another script resource used by the current script resource.

In the "Resource Location" column 636 of script description 600, each row entry indicates a location of the presentation resource to which the action for the row is to be applied. Fields of this column may provide descriptions of a number of alternative locations for obtaining various versions

fuboTV Media Inc.
Exhibit 1015
Page 111

and/or subversions of a presentation segment collection; i.e. alternative locations have a "|" separator therebetween. The types of values that can occur in this column are:

(11.1) **SN** - Denotes a webserver 96 Name, also may be a physical network 70 address or an Internet domain name, as one skilled in the art will appreciate.

(11.2) **TWFTP** - Denotes the directory on client nodes 56 created to hold the presentation resources (e.g., presentation segments) downloaded from the webserver 96.

(11.3) **CD** - Denotes a CD-ROM drive attached to a client node 56; note that during preparation for a presentation performance, client determines the drive letter corresponding to the CD-ROM drive at his /her client node 56.

(11.4) **LOCAL** - Denotes anywhere on a client node 56, except the CD-ROM drive or the location designated by TWFTP.

(11.5) **END** - Denotes a time when clients have used a named resource, e.g., all clients have downloaded and displayed the logo image file, as the name resource.

fuboTV Media Inc.
Exhibit 1015
Page 112

(11.6) **GOT** - Denotes a time when clients have accessed the named resource, such as a time after a corporate logo file has been downloaded to all clients.

(11.7) **this** - Denotes that no external resources such as files, webservers, etc. are required for the command having this value.

Note that in the locations designated in at least (9.1) above, variables or "placeholders" can be provided in a script so that a developer of a script need not have at his/her disposal all the particulars as to where presentation resources (e.g., segment collections) will be stored for access during performance of the presentation. For example, variables or placeholders for as yet unidentified content webservers 96 may be provided as part of a location for a collection of segments. For example, each grouping of clients from the candidate audience members registered for a presentation performance has the following placeholders in presentation scripts defined within a corresponding presentation resource file 212: (a) the placeholder, "BBA-Main" which is to be resolved as the network 70 identifier for the webserver 96 providing access to real time and/or smaller size presentation segment subcollections, (b) "BBA-Ftp" which is to be resolved as the network 70 identifier for a file (Internet) server holding large presentation files suitable

fuboTV Media Inc.
Exhibit 1015
Page 113

for background download to client nodes 56, (c) "BBA-Ra" which is to be resolved as the network 70 identifier for an audio (Internet) server, or another location that provides access to audio data for the audio player 236, and (d) "BBA-QA" which is to be resolved as the network 70 identifier for the webserver 96 used for question and answer display sequences.

Regarding the "Resource Name" column 640 of script description 600, the entries of this column provide an identification of a presentation resource (e.g. presentation data segment file) independently of the network 70 address or node upon which the resource resides. Thus, a complete specification of a location of the resource requires the corresponding resource location and the resource name entries from the same row of script description 600. The following data types are available for fields of this column:

(12.1) **Path** - Denotes a path name to a file directory relative to the resource location. It is assumed that a nested or hierarchical file directory notation is used to identify the presentation resource residing at the location denoted by "Path".

(12.2) **File** - Denotes the name of a resource file.

(12.3) **Encoder Task** - Identifies a specific real time audio stream accessible from the webserver 96

fuboTV Media Inc.
Exhibit 1015
Page 114

identified in the corresponding Resource Location 636 column.

The foregoing discussion of the invention has been presented for purposes of illustration and description. Further, the description is not intended to limit the invention to the form disclosed herein. Consequently, variations and modifications commensurate with the above teachings, within the skill and knowledge of the relevant art, are within the scope of the present invention. The embodiments described hereinabove are further intended to explain the best mode presently known of practicing the invention and to enable others skilled in the art to utilize the invention as such, or in other embodiments, and with the various modifications required by their particular application or uses of the invention. It is intended that the appended claims be construed to include alternative embodiments to the extent permitted by the prior art.

fuboTV Media Inc.
Exhibit 1015
Page 115

What is claimed is:

1. A network presentation distribution system for presenting a presentation, comprising:

one or more presentation content supplying nodes of a communications network, said content supplying nodes for providing access to a collection of data segments of said presentation using said communications network, wherein said collection includes first and second subcollections of one or more of said segments;

a presentation controlling node for transmitting to at least a first client node, via the communications network, presentation control information used for identifying a group of subcollections of said segments, said group including said first and second subcollections; and

a first segment selector, activated in response to said first client node receiving said presentation control information, for selecting one of said first and second subcollections for transmitting said selected subcollection from one of said presentation content supplying nodes to said first client node.

2. A network presentation distribution system as claimed in Claim 1, wherein said segment selector includes a network analyzer for analyzing transmission characteristics of communications network when determining which of said first

fuboTV Media Inc.
Exhibit 1015
Page 116

and second subcollections to transmit to said first client node via said network communications network.

3. A system as claimed in Claim 1, wherein said first and second subcollections are stored on different ones of said content supplying nodes.

4. A system as claimed in Claim 1, wherein said first subcollection includes video with motion, and said second subcollection includes video with one of reduced motion and no motion.

5. A network presentation distribution system as claimed in Claim 1, wherein the communications network includes a portion of one of: the Internet, and a network using TCP/IP for communicating between at least one of:

(a) one of said content supplying nodes and said first client node;

(b) said presentation controlling node and said first client node;

(c) one of the content supplying nodes and said presentation controlling node.

6. A network presentation distribution system as claimed in Claim 1, wherein said presentation control information is transmitted to each of a plurality of client nodes so that a performance of said presentation occurs simultaneously at each of said plurality of client nodes.

7. A network presentation distribution system as claimed in Claim 1, wherein said first client node includes a first presentation display component for displaying said segments of the presentation that are transmitted to said first client node, and wherein a second client node for receiving said presentation control information includes a second display component for displaying said segments of the presentation selected by a second segment selector activated in response to said second client node receiving said presentation information, wherein when said first subcollection is transmitted to said first client node and said second subcollection is transmitted to said second client node, said first subcollection is displayed on said first client node substantially simultaneously with said second subcollection being displayed on said second client node.

8. A network presentation distribution system as claimed in Claim 1, wherein said first subcollection and said second subcollection have substantially different expected data transmission rates for being transmitted between said first client node, and one or more of said presentation content supplying nodes.

9. A network presentation distribution system as claimed in Claim 1, wherein an audio portion for said first subcollection is transmitted to said first client node concurrently and separately from said first subcollection.

10. A network presentation distribution system as claimed in Claim 1, wherein the first and second subcollections each have a common audio portion synchronously presented at said first client node, and at a second client node for receiving said presentation.

11. A network presentation distribution system as claimed in Claim 1, wherein said first segment selector is resident on said first client node and a second segment selector, activated in response to a second client node receiving said presentation control information, is resident on said second client node, wherein said first and second segment selectors each select one of said first and second subcollections for simultaneous presentation.

12. A network presentation distribution system as claimed in Claim 1, further including a network interface component, residing on said first client node, for receiving said presentation control information and transmitting a request for a subcollection of said group to one of said content supplying nodes.

13. A network presentation distribution system as claimed in Claim 12, wherein said network interface component includes a network browser.

14. A network presentation distribution system as claimed in Claim 1, further including a content manager for providing at least a video portion of said first and second

subcollections of said presentation to said content supplying nodes prior to a performance of said presentation, wherein during said performance of said presentation, said first subcollection is presented at said first client node, and said second subcollection is simultaneously presented at a second client node receiving said presentation control information.

15. A network presentation distribution system as claimed in Claim 1, wherein there are first and second versions of said presentation performed synchronously, respectively, at said first client node and a second client node for receiving said presentation control information, wherein there is a correspondence in content between at least a majority of segments in said first version with segments of said second version, and wherein said first and second versions have their corresponding audio portions in different natural languages.

16. A network presentation distribution system as claimed in Claim 1, wherein said first segment selector includes a comparator for comparing (a) a value indicative of a length of time expected to receive one of said first and second subcollections, and (b) a value indicative of: (i) a length of time related to one or more other client nodes receiving one or more subcollections of said collection, (ii) a predetermined default length of time, and (iii) a length of time determined by a leader of said presentation performance.

fuboTV Media Inc.
Exhibit 1015
Page 120

17. A network presentation distribution system as claimed in Claim 1, wherein at least one of: one of said content supplying nodes; and said first client node communicates via a corporate intranet.

18. A network presentation distribution system as claimed in Claim 1, wherein said presentation controlling node accesses a predetermined script for said presentation control information , said script identifying a sequence of segments of said collection for the presentation.

19. A network presentation distribution system as claimed in Claim 1, further including a leader node for a leader of a performance of said presentation , wherein the leader directs a pace and content of the presentation performance provided to said client nodes .

20. A network presentation distribution system as claimed in Claim 1, wherein the communications network uses TCP/IP as a network protocol.

21. A network presentation distribution system as claimed in Claim 1, further including a phone bridge controller for controlling one or more telephone bridges providing audio communication during a performance of the presentation, through a telephone at a client site having said first client node, wherein said telephone provides the audio communication to the client site different from said communications network.

fuboTV Media Inc.
Exhibit 1015
Page 121

22. A network presentation distribution system as claimed in Claim 1, wherein at least one of said content supplying network nodes is an Internet website.

fuboTV Media Inc.
Exhibit 1015
Page 122

23. A network presentation distribution system for presenting a presentation, comprising:

a first and second presentation content supplying nodes of a communications network, said first and second content supplying nodes for providing access to one or more collections of data segments of said presentation using said communications network;

a presentation controlling node for transmitting to at least a first client node, presentation control information used for identifying a first subcollection of said segments for presentation at said first client node; and

a content node selector, activated in response to said first client node receiving said presentation control information, for selecting one of said first and second content supplying nodes for transmitting one of: (a) said first subcollection to said first client node using said communications network; and (b) an alternative subcollection of one or more of said segments predetermined as a replacement for said first subcollection.

24. A network presentation distribution system as claimed in Claim 23, wherein said content node selector selects one of said first and second content supplying nodes and according to one of: (a) a measurement related to a previous data transmission rate between said first client node and at least one of said first and second content supplying

fuboTV Media Inc.
Exhibit 1015
Page 123

Sub A6

nodes, and (b) an expected data transmission rate between said first client node, and at least one of said first and second content supplying nodes.

25. A network presentation distribution system as claimed in Claim 23, wherein a presentation request from said first client node to one of said content supplying nodes includes at least one of: (a) an identification of a version of said presentation, said version for a predetermined group of presentation audience members, (b) an identification of one of said first and second subcollections identified in a predetermined script for said presentation ; and (c) information for identifying an alternative segment determined by a leader of a performance of said presentation, wherein said alternative segment is not identified in said script.

26. A network presentation distribution system as claimed in Claim 23, further including a phone bridge controller for routing presentation related audio communications to a client site having said first client node, via one or more phone bridges, wherein a telephone at said client site transforms the presentation related audio communications into an audible communication having natural language speech included therein.

Sub A7

27. A presentation system as claimed in Claim 23, wherein said presentation controlling node includes a presentation script processing component for generating

fuboTV Media Inc.
Exhibit 1015
Page 124

presentation performance commands from a script for said presentation, wherein for said first client node, said generated commands synchronize a display of a video content of said segments with a related audio content.

28. A presentation system as claimed in Claim 27, wherein said presentation controlling node includes a phone bridge controller for directing a phone bridge to provide audio communications between a client site having said first client node and one of: said presentation controlling node and a leader of a performance of said presentation, wherein said phone bridge routes presentation performance related audio information differently from network communications between said presentation controlling node and first client via said communications network.

29. A presentation system as claimed in Claim 23, wherein said presentation controlling node transmits said presentation control information to at least a second client node for synchronizing a performance of said presentation at said first client node with a performance of said presentation at said second client node.

fuboTV Media Inc.
Exhibit 1015
Page 125

30. A network presentation distribution system for presenting a presentation, comprising:

one or more content supplying network nodes able to provide a plurality of segments to a first of one or more network client nodes, via a communications network, wherein each of said segments provides a portion of a particular presentation;

a presentation controlling network node for transmitting presentation control information providing identities of segments in a collection of said segments when the presentation is performed at said first client node;

a presentation network component at said first client node, wherein, after receiving said presentation control information, said presentation network component transmits segment selection information, obtained using said presentation control information, to a first of said content supplying nodes for obtaining the collection at said first client node;

a segment selector that uses one of: (a) the presentation control information, and (b) the segment selection information for identifying the collection to transmit from the first content supplying node to the first client node.

31. A network presentation distribution system as claimed in Claim 30, wherein said selection information

fuboTV Media Inc.
Exhibit 1015
Page 126

Sub A8

depends on a data transmission characteristic to the first client node from one of the content supplying nodes.

32. A network presentation distribution system as claimed in Claim 31, wherein said data transmission characteristic is one of a network data transmission rate and a measurement of network data transmission errors.

33. A network presentation distribution system as claimed in Claim 30, wherein said presentation controlling network node synchronizes a performance of said presentation on said first client node with a performance of said presentation on a second client node so that a particular one or more of said segments are presented on said first client node synchronously with an alternative one or more segments being output by one of said content supplying nodes to said second client node, wherein said alternative one or more segments correspond in content to said particular one or more segments.

34. A network presentation distribution system as claimed in Claim 30, wherein said presentation controlling network node includes network communication receiving means for receiving communication from a site of said first client node, said communication related to a response to an inquiry of a presentation audience member at said first client node.

fuboTV Media Inc.
Exhibit 1015
Page 127

35. A method for presenting a networked presentation, comprising:

storing a plurality of segments of a presentation for network access via one or more content supplying nodes of a communications network, wherein there are subcollections of one or more of the segments, each subcollection having a predetermined presentation order and there is a first and a second of the subcollections,, wherein said first subcollection is replaceable with said second subcollection when presenting the presentation;

identifying a plurality of network client nodes for presenting the presentation;

transmitting, via the communications network, presentation control information to a first and second of the client nodes;

first identifying said first subcollection for presenting at the first client node using said transmitted presentation control information;

second identifying said second subcollection for presenting at the second user node in place of the first subcollection, using said transmitted presentation control information;

first retrieving said first subcollection from said content supplying nodes for presenting at the first client node;

fuboTV Media Inc.
Exhibit 1015
Page 128

second retrieving said second subcollection from said content supplying nodes for presenting at the second client node substantially simultaneously with the presenting of the first subcollection at the first client node.

36. A method as claimed in Claim 35, wherein said step of transmitting to the first and second client nodes is performed substantially simultaneously, using the Internet as at least a portion of the communications network.

37. A method as claimed in Claim 35, further including a step of synchronizing presenting the presentation at the first client node with presenting the presentation at the second client node so that each of the subcollections presented at the first client node is presented substantially simultaneously with one of the subcollections, having the same order, at the second client node.

38. A method as claimed in Claim 37, wherein said step of synchronously presenting ~~synchronizing~~ includes obtaining, by said first client node, a network performance measurement of a network transmission from a first of the content supplying network nodes to the first client node.

39. A method as claimed in Claim 35, wherein said step of first retrieving includes retrieving the first subcollection by the first client node from a first of the content supplying nodes; and

fuboTV Media Inc.
Exhibit 1015
Page 129

said step of second retrieving includes retrieving the second subcollection by the second client node from a second of the content supplying nodes different from the first content supplying node.

40. A method as claimed in Claim 35, further including synchronizing the presenting of the first and second subcollections at the first and second client nodes with a corresponding audio portion of the presentation provided concurrently at the sites of the first and second client nodes, wherein the corresponding audio portion is provided to the sites using a different network protocol from a protocol used in said step of transmitting via the communications network.

fuboTV Media Inc.
Exhibit 1015
Page 130

41. A method for presenting a networked presentation, comprising:

storing a plurality of segments for a presentation, wherein said segments are network accessible from one or more content supplying network nodes for presenting the presentation, and wherein for a first subcollection of one or more of the segments, said first subcollection is capable of being accessed from a first of the content supplying nodes, and at least one of:

(a) said first subcollection has a corresponding different second subcollection of one or more of said segments that has been identified as a replacement for the first subcollection, and

(b) said first subcollection is capable of being accessed from a second of said content supplying nodes;

providing first and second client nodes for network transmission of the presentation to the client nodes, wherein at least the first client node has network access to at least one of: the first and second subcollections, and the first and second content supplying nodes;

determining, for the first client node, a measurement indicative of an expected network performance of a communications network for transmitting the first subcollection from the first content supplying node to the first client node;

fuboTV Media Inc.
Exhibit 1015
Page 131

selecting at least one of: the second subcollection and the second content supplying node when said measurement is indicative of an undesirable performance of the performance of the presentation at the first client node.

fuboTV Media Inc.
Exhibit 1015
Page 132

42. A presentation system for presenting a multimedia presentation having video and audio portions that correspond in content, comprising:

one or more video supplying network nodes for communicating one or more video portions of the multimedia presentation to one or more networked client nodes;

a phone bridge controller for providing commands to one or more phone bridges for routing presentation related audio communication, to a corresponding telephony device at each site having one of the client nodes, wherein: (a) each of one or more portions of the related audio communication corresponds in content with one of the video portions, and (b) the telephony devices at the sites transform the presentation related audio communications into an audible form having natural language speech included therein;

a presentation controller for synchronizing a presenting, at the client nodes, of predetermined ones of the video and audio portions that correspond in content, wherein for each of the client nodes, said presentation controller: (a) communicates with the client node for providing information used for identifying a particular one of the video portions for transmission from one of the video supplying network nodes to the client node; and (b) communicates with said phone bridge controller for routing, to the client node, the audio

fuboTV Media Inc.
Exhibit 1015
Page 133

25 portion corresponding in content with the particular video portion.

fuboTV Media Inc.
Exhibit 1015
Page 134

43. A method of presenting a multimedia presentation:

storing a script of one or more presentation commands for performing multimedia segments of said presentation wherein a first of said one or more commands references one or more unresolved identifiers of one or more network content supplying nodes providing access to at least a video portion of a first subcollection of one or more of said segments via a communications network;

Sub A17

storing a communications network identifier for each of one or more of said content supplying nodes providing network access to said first subcollection;

identifying one or more client nodes for receiving a performance of said presentation;

resolving said unresolved identifiers of a first of said commands using said stored communications network identifiers for thereby obtaining a resolved command;

performing said resolved command at each of said client nodes during said performance by requesting said first subcollection from said first content supplying node;

requesting by a first of said client nodes, when said first subcollection is not received by said first client node within a predetermined time, one of: an alternative subcollection of one or more of said segments, in place of said first subcollection, from one of said content supplying

fuboTV Media Inc.
Exhibit 1015
Page 135

25 nodes, and said first subcollection from an alternate one of said content supplying nodes.

sub A12

44. A method as claimed in Claim 43, further including transmitting said resolved command from a presentation controlling node to each of said client nodes.

a

45. A method as claimed in Claim ~~45~~ 43, wherein said steps of identifying, performing, and requesting use said communications network and said communications network includes at least a portion of the Internet.

add A13

add B1

add e14

fuboTV Media Inc.
Exhibit 1015
Page 136

09/052862

Abstract

A presentation system is disclosed for distributing a performance of a presentation synchronously to a plurality of client nodes on a network such as the Internet. The presentation system distributes presentation content data to a plurality of network server nodes, and during a performance of the presentation, the client nodes receiving the presentation determine a particular variation of data presentation to retrieve from the network server nodes. In particular, the retrieval of presentation data depends upon the transmission characteristics of the network such as data transmission rate. Thus, if a low transmission data rate is detected at a first client node, presentation elements of a reduced size can be retrieved. Alternatively, if a higher transmission rate is detected at a second client node, presentation elements of greater size (and corresponding enhanced quality of presentation) can be retrieved. Thus, within a single performance, client network nodes with varying available network bandwidths can be utilized for synchronously and simultaneously performing the presentation.

J:\3654\-1\PATENT.001

fuboTV Media Inc.
Exhibit 1015
Page 137

ORIGINALLY FILED

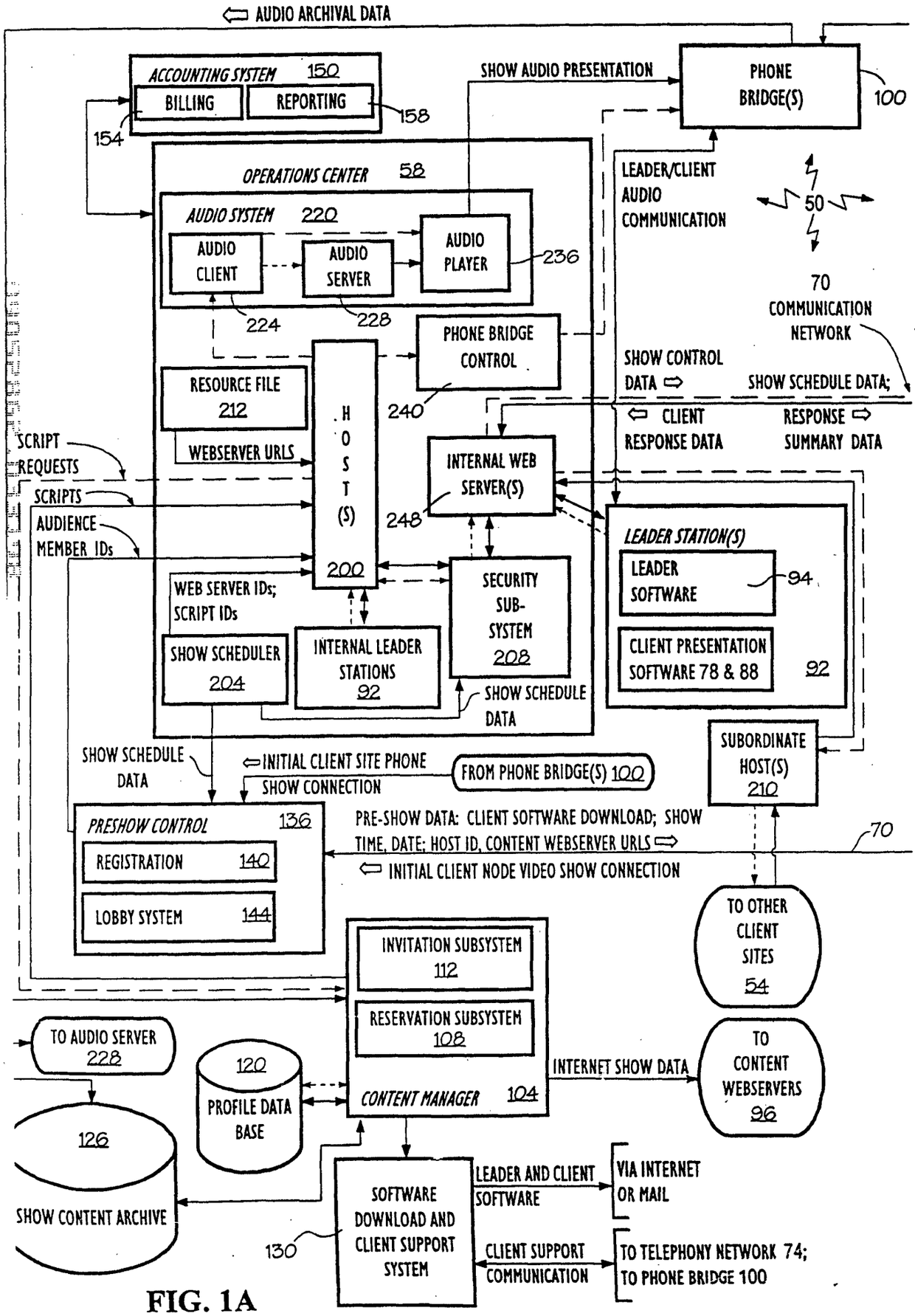

FIG. 1A

INT OF DRAWINGS
; ORIGINALLY FILED

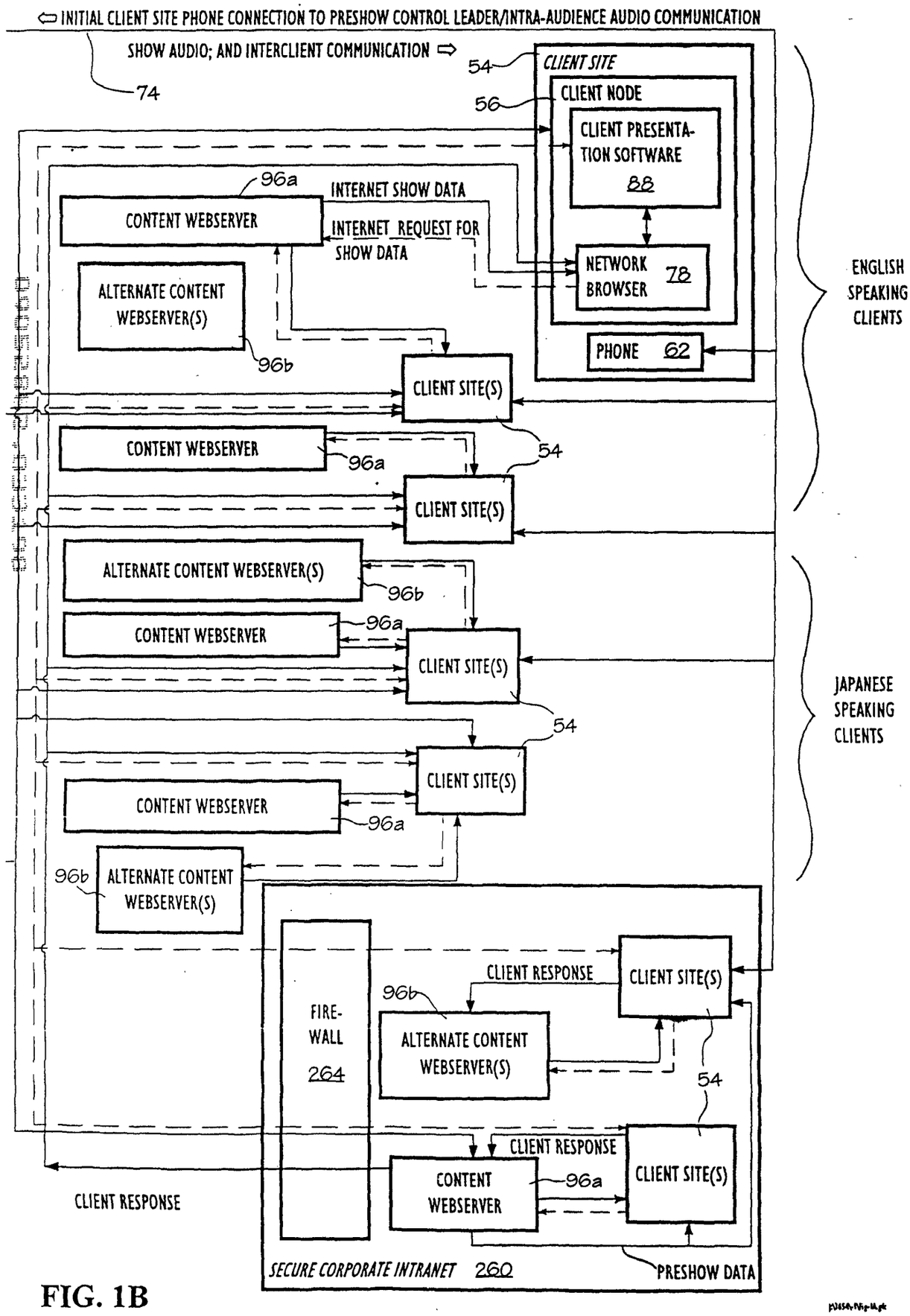

FIG. 1B

NT OF DRAWINGS
ORIGINALLY FILED

FIG. 2A

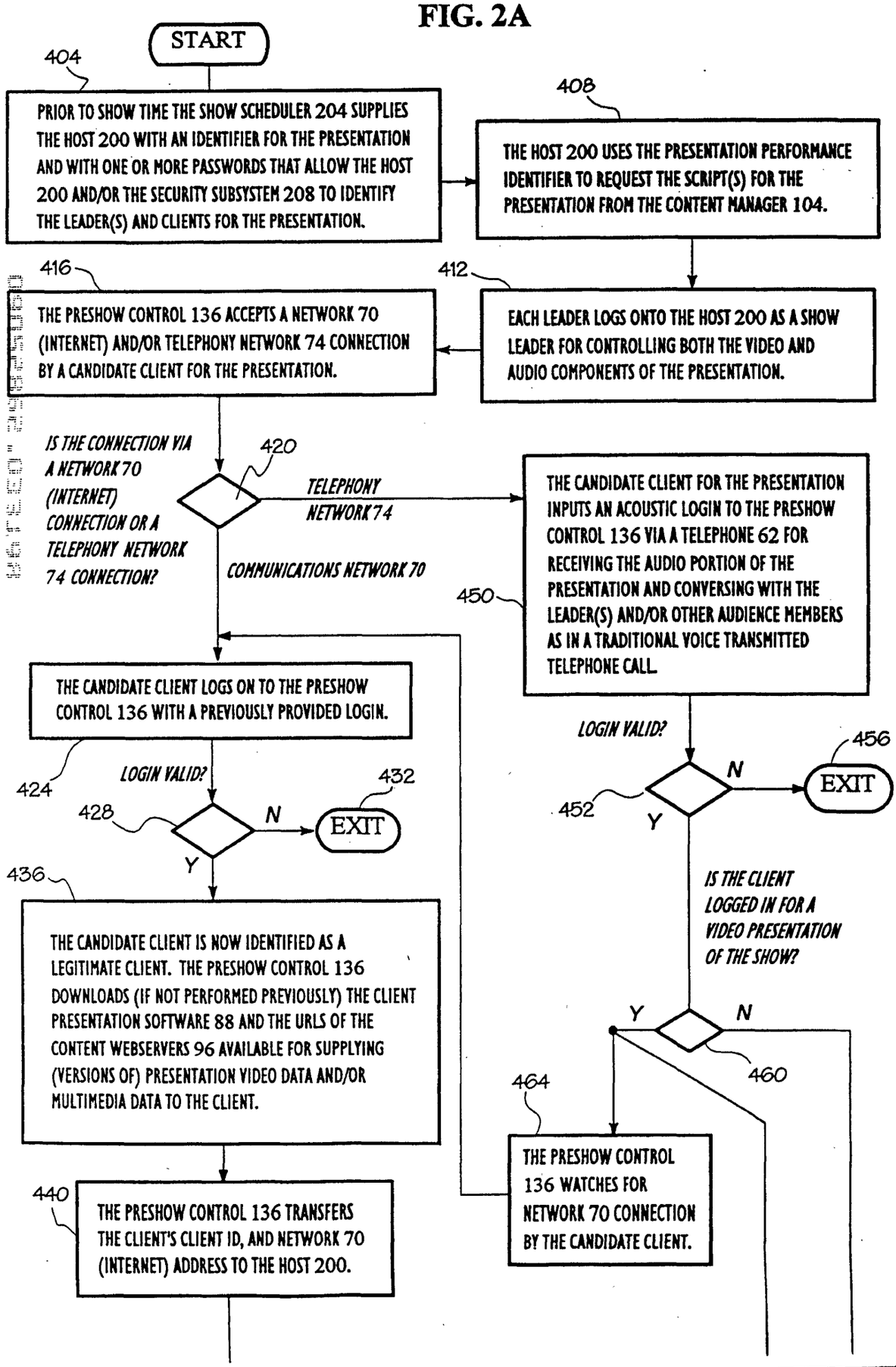

INT OF DRAWINGS
S ORIGINALLY FILED

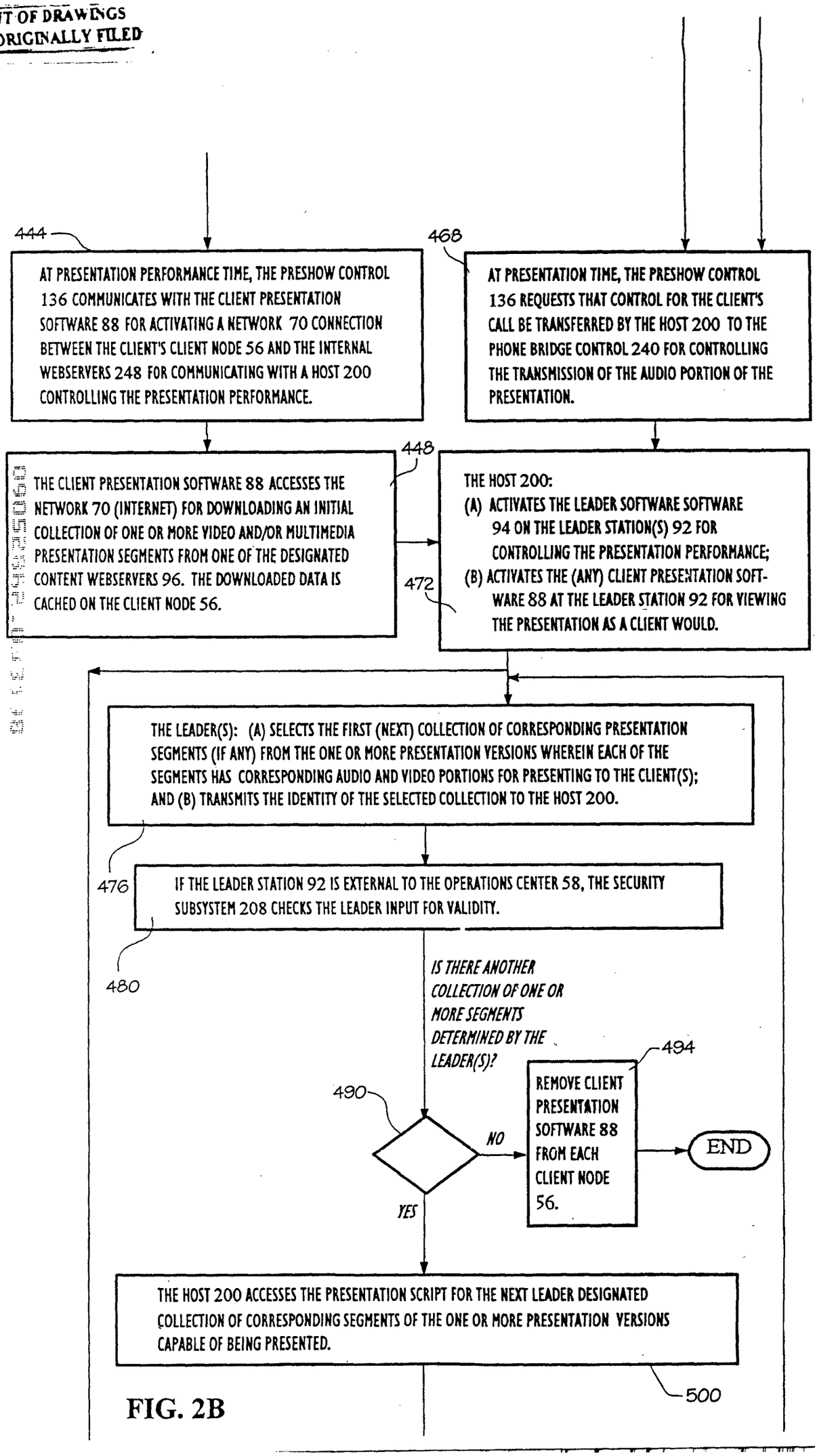

FIG. 2B

UNT OF DRAWINGS
S ORIGINALLY FILED

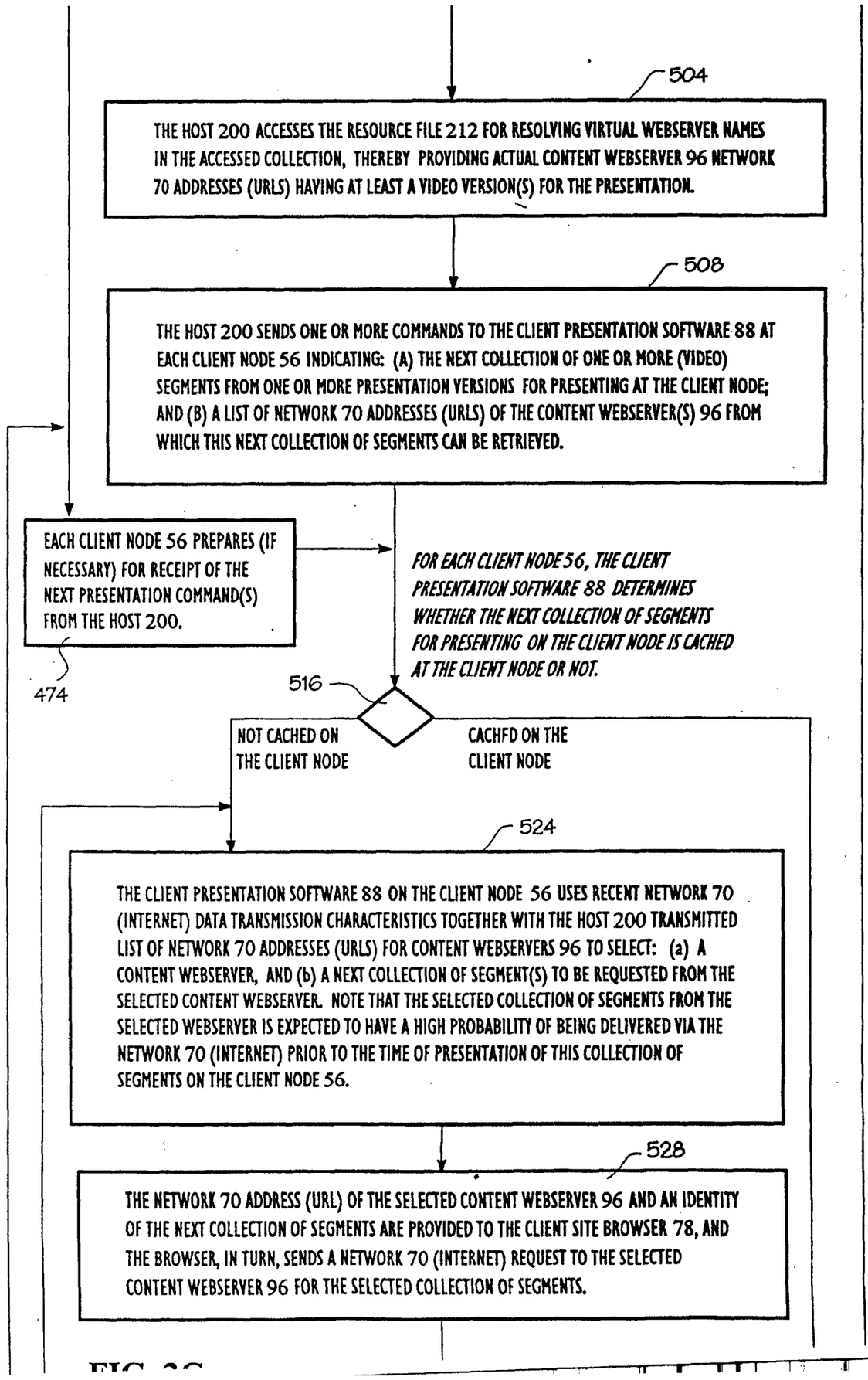

RINT OF DRAWINGS
S ORIGINALLY FILED

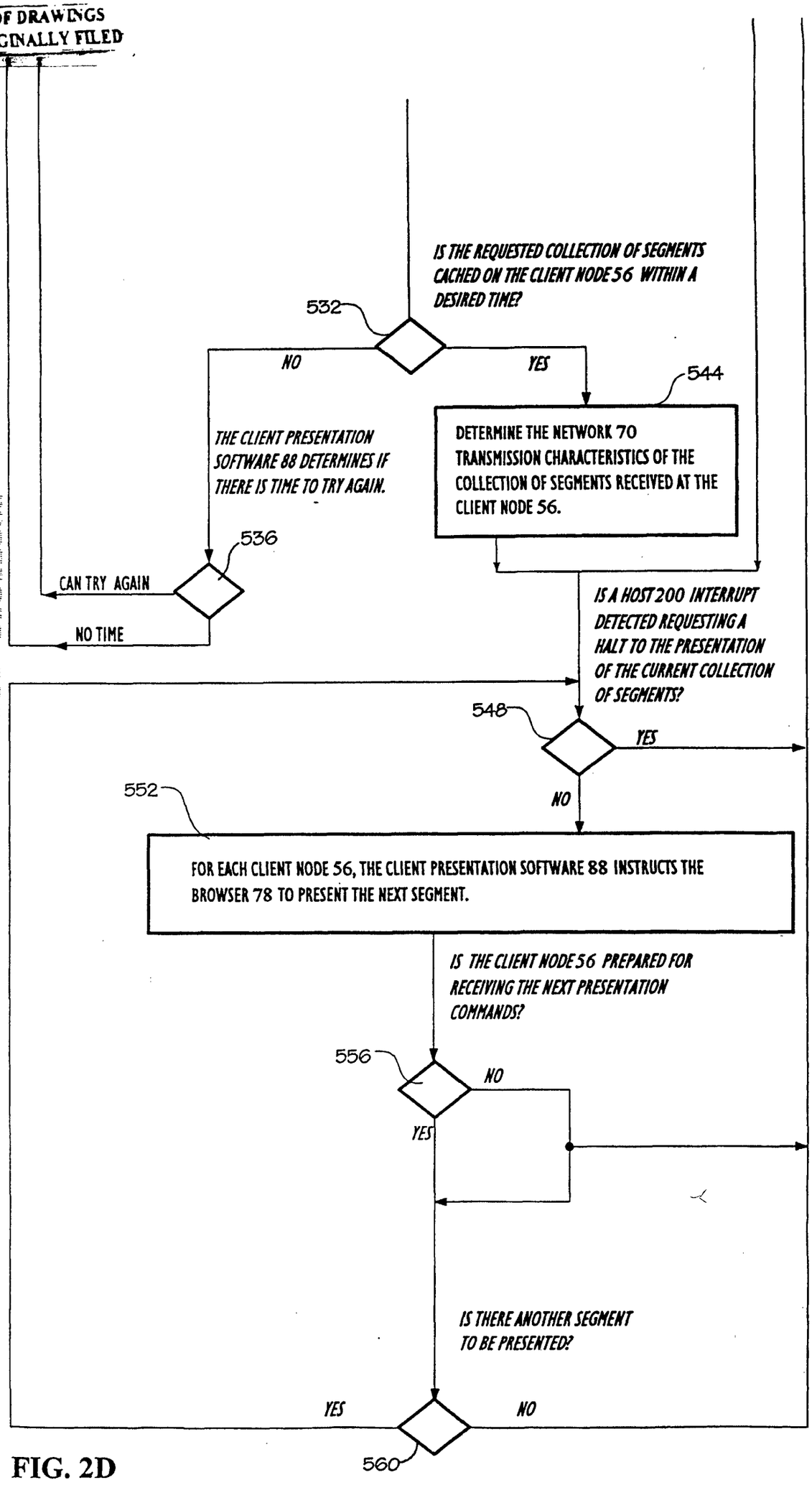

FIG. 2D

600

	612 Script Level	616 Item #	620 Virtual Time hr:min:sec	624 Action	632 Resource Type	636 Resource Location	640 Resource Name
608a	1	1	0.00	client_Load	FTP_File	Server Name (SN)	Path + File *
608b	2				FTP_Dir	Server Name	Path *
608c	3			client_Free	FTP_File	"TWFTP"	File
608d	12			client_Display	HTML_File	SN | TWFTP | CD | LOCAL	Path + File | File *
608e	13	2	1:01.00		MC_Question	SN | TWFTP | CD | LOCAL	Path + File | File *
608f	23				MC_Answer	SN | TWFTP | CD | LOCAL	Path + File | File *
608g	123				Info_Form	SN | TWFTP | CD | LOCAL	Path + File | File *
608h	1,2,3			client_Play	Audio_RaFile	Server Name	Path + File
608i	1,2,3				Audio_RaLive	Server Name	Encoder Task
608j	1,2,3			leader_Hold	---------	---------	-------
608k	1,2,3		0.00	time_Set_At	"THIS LINE"	-------	-------
608l	1,2,3			time_HoldTo	HTML_File	"END" | "GOT"	-------
608m	1,2,3				Audio_RaFile	"END"	-------
608n	1,2,3			child_Script	TWscript	"this"	Path + File
608o	1,2,3			End_Start	---------	---------	-------
608p	123	999	~~9:59:59.99~~	END	---------	-------	-------
608q	END						

Fig. 3

RULE 63 (37 CFR § 1.63)
DECLARATION FOR PATENT APPLICATION
IN THE UNITED STATES PATENT AND TRADEMARK OFFICE

As a below named inventor, I hereby declare that my residence, post office address and citizenship are as stated below next to my name, and I believe I am an original, first and joint inventor of the subject matter which is claimed and for which a patent is sought on the invention entitled "METHOD AND SYSTEM FOR PROVIDING A PRESENTATION ON A NETWORK," the specification of which is identified as Attorney File No. 3654-1 and attached hereto.

I hereby state that I have reviewed and understand the contents of the above-identified specification, including the claims, as amended by any amendment referred to above. I acknowledge the duty to disclose information which is material to patentability in accordance with 37 CFR 1.56(a) and (b) as set forth on the attached sheet indicated Page 3 hereof and which I have read.

I hereby claim foreign priority benefits under 35 U.S.C. 119/365 of any foreign application(s) for patent or inventor's certificate listed below and have also identified below any foreign application for patent or inventor's certificate having a filing date before that of the application on which priority is claimed:

Prior Foreign Application(s)			Priority Claimed	
Number	Country	Day/Month/Year Filed	Yes	No
n/a				

I hereby claim the benefit under 35 U.S.C. 120/365 of all United States and PCT international applications listed below and, insofar as the subject matter of each of the claims of this application is not disclosed in such prior applications in the manner provided by the first paragraph of 35 U.S.C. 112, I acknowledge the duty to disclose information material to patentability in accordance with 37 CFR 1.56(a) and (b) which occurred between the filing date(s) of the prior application(s) and the national or PCT international filing date of this application:

Application Serial No.	Filing Date	Status: patented, pending, abandoned
60/041,770	3/31/98	pending

I hereby declare that all statements made herein of my own knowledge are true and that all statements made on information and belief are believed to be true; and further that these statements were made with the knowledge that willful false statements and the like so made are punishable by fine or imprisonment, or both, under Section 1001 of Title 18 of the United States Code and that such willful false statements may jeopardize the validity of the application or any patent issued thereon.

BEST COPY

(1) Inventor's Signature Robert H Ogdon Date 3/28/98

Inventor's Name (typed): Robert H. Ogdon

Citizenship: USA

Residence: 3 Golden Eagle Lane
Littleton, Colorado 80127 Co

Post Office Address*: Same as Residence

(2) Inventor's Signature Frank E Johnson Date 3/31/98

Inventor's Name (typed): Frank E. Johnson

Citizenship: USA

Residence: 157 North Buckingham Dr.
Aurora, Illinois 60506 IL

Post Office Address*: Same as Residence

*Complete Post Office Address in full if different from Residence, otherwise indicate that the Post Office Address is "Same as Residence."

fuboTV Media Inc.
Exhibit 1015
Page 146

37 CFR §1.56(a) and (b)
DUTY TO DISCLOSE INFORMATION MATERIAL
TO PATENTABILITY

(a) A patent by its very nature is affected with a public interest. The public interest is best served, and the most effective patent examination occurs when, at the time an application is being examined, the Office is aware of and evaluates the teachings of all information material to patentability. Each individual associated with the filing and prosecution of a patent application has a duty of candor and good faith in dealing with the Office, which includes a duty to disclose to the Office all information known to that individual to be material to patentability as defined in this section. The duty to disclose information exists with respect to each pending claim until the claim is cancelled or withdrawn from consideration, or the application becomes abandoned. Information material to the patentability of a claim that is cancelled or withdrawn from consideration need not be submitted if the information is not material to the patentability of any claim remaining under consideration in the application. There is no duty to submit information which is not material to the patentability of any existing claim. The duty to disclose all information known to be material to patentability is deemed to be satisfied if all information known to be material to patentability of any claim issued in a patent was cited by the Office or submitted to the Office in the manner prescribed by §§1.97(b)-(d) and 1.98. However, no patent will be granted on an application in connection with which fraud on the Office was practiced or attempted or the duty of disclosure was violated through bad faith or intentional misconduct. The Office encourages applicants to carefully examine:

(1) prior art cited in search reports of a foreign patent office in a counterpart application, and

(2) the closest information over which individuals associated with the filing or prosecution of a patent application believe any pending claim patentably defines, to make sure that any material information contained therein is disclosed to the Office.

(b) Under this section, information is material to patentability when it is not cumulative to information already of record or being made of record in the application, and

(1) It establishes, by itself or in combination with other information, a prima facie case of unpatentability of a claim; or

(2) It refutes, or is inconsistent with, a position the applicant takes in:

(i) Opposing an argument of unpatentability relied on by the Office, or

(ii) Asserting an argument of a patentability.

A prima facie case of unpatentability is established when the information compels a conclusion that a claim is unpatentable under the preponderance of evidence, burden-of-proof standard, giving each term in the claim its broadest reasonable construction consistent with the specification, and before any consideration is given to evidence which may be submitted in an attempt to establish a contrary conclusion of patentability.*

*Note, 37 CFR §1.97(h) states: "The filing of an information disclosure statement shall not be construed to be an admission that the information cited in the statement is, or is considered to be, material to patentability as defined in §1.56(b)."

fuboTV Media Inc.
Exhibit 1015
Page 147

Application Assignment Record

According to the application transmittal letter, an assignment recording ownership was filed with this application; however, a copy of this record was not located in the original file history record obtained from the United States Patent and Trademark Office. Upon your request, we will attempt to obtain the assignment documents from the Assignment Recordation Branch of of the United States Patent and Trademark Office or from a related application case (if applicable). Please note that additional charges will apply for this service.

This page is not part of the official USPTO record. It has been determined that content identified on this document is missing from the original file history record.

POWER OF ATTORNEY

On behalf of Broadband Associates, Inc., a Delaware corporation having a principal place of business at 2 West Dry Creek Circle, Suite 270, Littleton, Colorado 80120, being the assignee of and owning all right, title and interest in the invention entitled "METHOD AND SYSTEM FOR PROVIDING A PRESENTATION ON A NETWORK," for which application for Letters Patent of the United States has been made by Robert H. Ogdon and Frank E. Johnson, said application being identified as Attorney File No. 3654-1 and executed on even date herewith, I, Frank E. Johnson, Treasurer of Broadband Associates, Inc., hereby appoint David F. Zinger, Registration No. 29,127; Craig C. Groseth, Registration No. 31,713; Michael L. Tompkins, Registration No. 30,980; Sabrina C. Stavish, Registration No. 33,374; Todd P. Blakely, Registration No. 31,328; Lewis D. Hansen, Registration No. 35,536; Joseph E. Kovarik, Registration No. 33,005; Gary J. Connell, Registration No. 32,020; Warnell M. Crook, Registration No. 31,071; Douglas W. Swartz, Registration No. 37,739; John C. Scott, Registration No. 38,613; Bruce A. Kugler, Registration No. 38,942; Robert R. Brunelli, Registration No. 39,617; Chester E. Martine, Jr., Registration No. 19,711; Richard L. Hughes, Registration No. 31,264; Tejpal S. Hansra, Registration No. 38,172; Dana L. Hartje, Registration No. 40,638; Don D. Cha, Registration No. 40,945; Angela Dallas-Pedretti, Registration No. P-42,460; and Benjamin B. Lieb, Registration No. P-42,801, of SHERIDAN ROSS P.C., 1700 Lincoln Street, Suite 3500, Denver, Colorado 80203, telephone number (303) 863-9700, as attorneys and agents for Broadband Associates, Inc., with full powers of substitution, association and revocation to prosecute the application and related U.S. and foreign applications and to transact all business in the United States Patent and Trademark Office and all foreign and international patent offices connected therewith.

By: Frank E. Johnson
Frank E. Johnson
Treasurer

Date: 3/31/98

VERIFIED STATEMENT (DECLARATION) CLAIMING SMALL ENTITY STATUS
(37 CFR 1.9(f) and 1.27(c)) - SMALL BUSINESS CONCERN

I hereby declare that I am an official empowered to act on behalf of Broadband Associates, Inc., 2 West Dry Creek Circle, Suite 270, Littleton, Colorado 80120, a small business concern.

I hereby declare that the above-identified small business concern qualifies as a small business concern as defined in 13 CFR 121.3-18, and reproduced in 37 CFR 1.9(d), for purposes of paying reduced fees under section 41(a) and (b) of Title 35, United States Code, in that the number of employees of the concern, including those of its affiliates, does not exceed 500 persons. For purposes of this statement, (1) the number of employees of the business concern is the average over the previous fiscal year of the concern of the persons employed on a full-time, part-time or temporary basis during each of the pay periods of the fiscal year, and (2) concerns are affiliates of each other when either, directly or indirectly, one concern controls or has the power to control the other, or a third party or parties controls or has the power to control both.

I hereby declare that rights under contract or law have been conveyed to and remain with the small business concern identified above with regard to the invention, entitled "METHOD AND SYSTEM FOR PROVIDING A PRESENTATION ON A NETWORK," and identified as Attorney File No. 3654-1, described in the specification filed herewith.

If the rights held by the above-identified small business concern are not exclusive, each individual, concern or organization having rights to the invention is listed below* and no rights to the invention are held by any person, other than the inventor, who could not qualify as a small business concern under 37 CFR 1.9(c) or by any concern which would not qualify as a small business concern under 37 CFR 1.9(d) or a nonprofit organization under 37 CFR 1.9(e).
*NOTE: Separate verified statements are required from each named person, concern or organization having rights to the invention averring to their status as small entities. (37 CFR 1.27)

NAME_____

ADDRESS_____
[ ] INDIVIDUAL [ ] SMALL BUSINESS CONCERN [ ] NONPROFIT ORGANIZATION

I acknowledge the duty to file, in this application or patent, notification of any change in status resulting in loss of entitlement to small entity status prior to paying, or at the time of paying, the earliest of the issue fee or any maintenance fee due after the date on which status as a small entity is no longer appropriate. (37 CFR 1.28(b))

I hereby declare that all statements made herein of my own knowledge are true and that all statements made on information and belief are believed to be true; and further that these statements were made

with the knowledge that willful false statements and the like so made are punishable by fine or imprisonment, or both, under section 1001 of Title 18 of the United States Code, and that such willful false statements may jeopardize the validity of the application, any patent issuing thereon, or any patent to which this verified statement is directed.

Date: 3/31/98

By: Frank E. Johnson
Frank E. Johnson
Treasurer

Transaction History Date 1998-05-27
Date information retrieved from USPTO Patent Application Information Retrieval (PAIR) system records at www.uspto.gov

2756

PATENT APPLICATION #2 RS

MAY 27 1998

IN THE UNITED STATES PATENT AND TRADEMARK OFFICE

In Re the Application of:	Group Art Unit:
JOHNSON et al.	Examiner:
Serial No.: 09/052,862	INFORMATION DISCLOSURE STATEMENT
Filed: March 31, 1998	
Atty. File No.: 3654-1	
For: "METHOD AND SYSTEM FOR PROVIDING A PRESENTATION ON A NETWORK"	

CERTIFICATE OF MAILING

I HEREBY CERTIFY THAT THIS CORRESPONDENCE IS BEING DEPOSITED WITH THE UNITED STATES POSTAL SERVICE AS FIRST CLASS MAIL IN AN ENVELOPE ADDRESSED TO ASSISTANT COMMISSIONER FOR PATENTS, WASHINGTON, D.C., 20231 ON MAY 21, 1998.

SHERIDAN ROSS P.C.

BY: Vonstrice Robinett

Assistant Commissioner for Patents
Washington, D.C. 20231

Dear Sir:

Pursuant to Applicants' duty of disclosure under 37 CFR § 1.56 and 37 CFR §§ 1.97-1.98, Applicants hereby provide a copy of each of the documents identified on the enclosed PTO Form 1449. Applicants do not admit that any of such documents, alone or in any combination, is considered to be material to patentability as defined in 37 CFR § 1.56(b). Moreover, the inclusion of these documents is not to be construed as an admission by Applicants that each such document is prior art as to the above-identified patent application.

RECEIVED
98 JUN -2 AM 10:48
GROUP 2700

Respectfully submitted,

SHERIDAN ROSS P.C.

By: _____

Todd P. Blakely
Registration No. 31,328
1700 Lincoln Street, Suite 3500
Denver, Colorado 80203
(303) 863-9700

Date: 5/21/98

OIPE
MAY 2 7 1998

SHEET 1 OF 2

FORM PTO-1449 U.S. DEPARTMENT OF COMMERCE PATENT AND TRADEMARK OFFICE	ATTY. DOCKET NO. 3654-1	SERIAL NO. 09/052,862
INFORMATION DISCLOSURE STATEMENT (Use several sheets if necessary)	APPLICANT JOHNSON et al.	
	FILING DATE March 31, 1998	GROUP ART

U.S. PATENT DOCUMENTS

*EXAMINER INITIAL		DOCUMENT NUMBER	DATE	NAME	CLASS	SUB CLASS	FILING DATE IF APPROP.
AR	AA	5,568,183	10/22/96	CORTJENS ET AL.	348	15	
AR	AB	5,563,878	10/8/96	BLAKELEY	370	60	
AR	AC	5,557,607	9/17/96	HOLDEN	370	58.2	
AR	AD	5,555,017	9/10/96	LANDANTE ET AL.	348	15	
AR	AE	5,553,068	9/3/96	ASO ET AL.	370	60	
AR	AF	5,526,037	6/11/96	CORTJENS ET AL.	348	15	
AR	AG	5,491,797	2/13/96	THOMPSON ET AL.	395	200.03	

FOREIGN PATENT DOCUMENTS

		DOCUMENT NUMBER	DATE	COUNTRY	CLASS	SUB CLASS	TRANSLATION YES	TRANSLATION NO
	AH							
	AI							

RECEIVED 99 JUN -2 AM 10:48 GROUP 2700

EXAMINER Omari Romero	DATE CONSIDERED 12/17/99

*EXAMINER: Initial if reference considered, whether or not citation is in conformance with MPEP 609; Draw line through citation if not in conformance and not considered. Include copy of this form with next communication to applicant.

MAY 27 1998

SHEET 2 OF 2

FORM PTO-1449 U.S. DEPARTMENT OF COMMERCE PATENT AND TRADEMARK OFFICE	ATTY. DOCKET NO. 3654-1	SERIAL NO. 09/052,862
INFORMATION DISCLOSURE STATEMENT (Use several sheets if necessary)	APPLICANT JOHNSON et al.	
	FILING DATE March 31, 1998	GROUP ART

OTHER ART (Including Author, Title, Date, Pertinent Pages, etc.)

	AJ	
	AK	
	AL	

RECEIVED
98 JUN -2 AM 10:48
GROUP 2700

EXAMINER	DATE CONSIDERED
*EXAMINER: Initial if reference considered, whether or not citation is in conformance with MPEP 609; Draw line through citation if not in conformance and not considered. Include copy of this form with next communication to applicant.	

Transaction History Date 1998-10-13.
Date information retrieved from USPTO Patent Application Information Retrieval (PAIR) system records at www.uspto.gov

OIPE JC60
OCT 13 1998
PATENT & TRADEMARK OFFICE

GAU 2756

#B 10/n/98

IN THE UNITED STATES PATENT AND TRADEMARK OFFICE

In Re the Application of:

JOHNSON et al.

Serial No.: 09/052,862

Filed: March 31, 1998

Atty. File No.: 3654-1

For: "METHOD AND SYSTEM FOR PROVIDING A PRESENTATION ON A NETWORK"

Group Art Unit: 2756

Examiner:

INFORMATION DISCLOSURE STATEMENT

Received
OCT 16 1998
Group 2700

CERTIFICATE OF MAILING

I HEREBY CERTIFY THAT THIS CORRESPONDENCE IS BEING DEPOSITED WITH THE UNITED STATES POSTAL SERVICE AS FIRST CLASS MAIL IN AN ENVELOPE ADDRESSED TO ASSISTANT COMMISSIONER FOR PATENTS, WASHINGTON, D.C., 20231 ON OCTOBER 8, 1998.

SHERIDAN ROSS P.C.

BY: Bruce Bennett

Assistant Commissioner for Patents
Washington, D.C. 20231

Dear Sir:

Pursuant to Applicants' duty of disclosure under 37 CFR § 1.56 and 37 CFR §§ 1.97-1.98, Applicants hereby provide a copy of each of the documents identified on the enclosed PTO Form 1449, although Applicants do not admit that any of such documents, alone or in any combination, is considered to be material to patentability as defined in 37 CFR § 1.56(b). Moreover, the inclusion of these documents is not to be construed as an admission by Applicants that each such document is prior art as to the above-identified patent application. These references were cited in the Search Report issued regarding related PCT Application No. PCT/US98/06667.

Respectfully submitted,

SHERIDAN ROSS P.C.

By: Todd P. Blakely

Todd P. Blakely
Registration No. 31,328
1700 Lincoln Street, Suite 3500
Denver, Colorado 80203
(303) 863-9700

Date: 10/8/98

OIPE
OCT 13 1998
PATENT & TRADEMARK OFFICE

SHEET 1 OF 1

FORM PTO-1449 U.S. DEPARTMENT OF COMMERCE PATENT AND TRADEMARK OFFICE	ATTY. DOCKET NO. 3654-1	SERIAL NO. 09/053,862 Received
INFORMATION DISCLOSURE STATEMENT (Use several sheets if necessary)	APPLICANT JOHNSON et al.	OCT 16 1998
	FILING DATE March 31, 1998	GROUP ART Group 2700

U.S. PATENT DOCUMENTS

*EXAMINER INITIAL		DOCUMENT NUMBER	DATE	NAME	CLASS	SUB CLASS	FILING DATE IF APPROP.
AR	A1.	5,594,495	1/14/97	Palmer et al.	348	17	
AR	AB	5,590,127	12/31/96	Bales et al.	370	260	
AR	AC	5,473,363	12/5/95	Ng et al.	348	15	
AR	AD	5,003,532	3/26/91	Ashida et al.	370	62	
AR	AE	4,710,917	12/1/87	Tompkins et al.	370	62	
AR	AF	4,650,929	3/17/87	Boerger et al.	358	86	

FOREIGN PATENT DOCUMENTS

		DOCUMENT NUMBER	DATE	COUNTRY	CLASS	SUB CLASS	TRANSLATION YES	TRANSLATION NO
	AG							

OTHER ART (Including Author, Title, Date, Pertinent Pages, etc.)

	AH	
	AI	

EXAMINER Alma Romero	DATE CONSIDERED 12/17/99

*EXAMINER: Initial if reference considered, whether or not citation is in conformance with MPEP 609; Draw line through citation if not in conformance and not considered. Include copy of this form with next communication to applicant.

Transaction History Date 1999-02-09
Date information retrieved from USPTO Patent Application Information Retrieval (PAIR) system records at www.uspto.gov

58-2-1564

AMENDMENT TRANSMITTAL

CASE DOCKET NO. 3654-1

IN RE THE APPLICATION OF: JOHNSON et al.

SERIAL NO: 09/052,862

FEB 0 9 1999

DATE FILED: March 31, 1998

FOR: "METHOD AND SYSTEM FOR PROVIDING A PRESENTATION ON A NETWORK"

FEB 1 8 1999

ASSISTANT COMMISSIONER FOR PATENTS
WASHINGTON, D.C. 20231

SIR:

TRANSMITTED HEREWITH IS AN AMENDMENT IN THE ABOVE-IDENTIFIED APPLICATION

[X] SMALL ENTITY STATUS OF THIS APPLICATION UNDER 37 CFR 1.9 AND 1.27 HAS BEEN ESTABLISHED BY A VERIFIED STATEMENT PREVIOUSLY SUBMITTED.

THE FILING FEE HAS BEEN CALCULATED AS SHOWN BELOW:

	(COL. 1) CLAIMS REMAINING AFTER AMENDMENT		(COL. 2) HIGHEST NO. PREVIOUSLY PAID FOR	(COL. 3) PRESENT EXTRA	SMALL ENTITY			LARGE ENTITY	
					RATE	ADDITIONAL FEE		RATE	ADDITIONAL FEE
TOTAL:	* 53	-	** 45	8	X $9 =	$72.00	OR	X $18 =	
INDEP:	12	-	*** 7	5	X $39 =	$195.00	OR	X $78 =	$400.00
__FIRST PRESENTATION OF MULTIPLE DEPENDENT CLAIMS					+ $130 =		OR	+ $260 =	
ADDITIONAL FEES					TOTAL:	$267.00	OR	TOTAL:	

*IF THE ENTRY IN COL. 1 IS LESS THAN THE ENTRY IN COL. 2, WRITE "0" IN COL. 3.
**IF THE "HIGHEST NUMBER PREVIOUSLY PAID FOR" IN THIS SPACE IS LESS THAN 20, WRITE "20" IN THIS SPACE.
***IF THE "HIGHEST NUMBER PREVIOUSLY PAID FOR" IN THIS SPACE IS LESS THAN 3, WRITE "3" IN THIS SPACE.

THE "HIGHEST NUMBER PREVIOUSLY PAID FOR" (TOTAL OR INDEPENDENT) IS THE HIGHEST NUMBER FOUND FROM THE EQUIVALENT BOX IN COL. 1 OF A PRIOR AMENDMENT OR THE NUMBER OF CLAIMS ORIGINALLY FILED.

[ ] PLEASE CHARGE DEPOSIT ACCOUNT NO. 19-1970 IN THE AMOUNT OF $_____. A DUPLICATE COPY OF THIS SHEET IS ENCLOSED.

[X] A CHECK IN THE AMOUNT OF $ 267 TO COVER THE FEE IS ENCLOSED.

[X] THE COMMISSIONER IS HEREBY AUTHORIZED TO CHARGE PAYMENT OF THE FOLLOWING FEES ASSOCIATED WITH THIS COMMUNICATION OR CREDIT ANY OVERPAYMENT TO DEPOSIT ACCOUNT NO. 19-1970. A DUPLICATE COPY OF THIS SHEET IS ENCLOSED.

[X] ANY FILING FEES UNDER 37 CFR 1.16 FOR THE PRESENTATION OF EXTRA CLAIMS.
[X] ANY PATENT APPLICATION PROCESSING FEES UNDER 37 CFR 1.17.

RESPECTFULLY SUBMITTED,

SHERIDAN ROSS P.C.

Todd P. Blakely
Registration No. 31,328

CERTIFICATE OF MAILING

I HEREBY CERTIFY THAT THIS CORRESPONDENCE IS BEING DEPOSITED WITH THE UNITED STATES POSTAL SERVICE AS FIRST CLASS MAIL IN AN ENVELOPE ADDRESSED TO ASSISTANT COMMISSIONER FOR PATENTS, WASHINGTON, D.C., 20231 ON FEBRUARY 3, 1999.

SHERIDAN ROSS P.C.

BY: Vaussima Kobrett

#5/A
2-22-99
M.L.

IN THE UNITED STATES PATENT AND TRADEMARK OFFICE

In Re the Application of:	Group Art Unit: 2756
JOHNSON et al.	Examiner:
Serial No.: 09/052,862	PRELIMINARY AMENDMENT
Filed: March 31, 1998	
Atty. File No.: 3654-1	
For: "METHOD AND SYSTEM FOR PROVIDING A PRESENTATION ON A NETWORK"	

FEB 09 1999

RECEIVED FEB 16 1999 Group 2700

CERTIFICATE OF MAILING

I HEREBY CERTIFY THAT THIS CORRESPONDENCE IS BEING DEPOSITED WITH THE UNITED STATES POSTAL SERVICE AS FIRST CLASS MAIL IN AN ENVELOPE ADDRESSED TO ASSISTANT COMMISSIONER FOR PATENTS, WASHINGTON, D.C., 20231 ON FEBRUARY 3, 1999.

SHERIDAN ROSS P.C.

BY: Constance Rohnett

Assistant Commissioner
for Patents
Washington, D.C. 20231

Dear Sir:

Prior to initial examination of this application, please enter the following Preliminary Amendment.

IN THE CLAIMS:

Please cancel Claims 13, 32 and 36 without prejudice or disclaimer of the subject matter thereof. Please amend the claims as follows:

1. (Once Amended) A network presentation distribution system for presenting a presentation, comprising:

A1 cont

one or more presentation content supplying nodes of a communications network, said content supplying nodes for providing access to a collection of data segments of said presentation using said communications network, wherein said

02/16/1999 MMARMOL 00000066 09052862

01 FC:202 195.00 OP
02 FC:203 72.00 OP

collection includes first and second subcollections of one or more of said segments;

a presentation controlling node for transmitting to at least a first client node, via the communications network, presentation control information used for identifying a group of subcollections of said segments, said group including said first and second subcollections; [and]

a computational component for measuring a performance related to one or more transmissions on the communications network, wherein a resulting performance measurement for said transmissions is indicative of a transmission performance of the communications network at said first client node; and

a first segment selector, activated in response to said first client node receiving said presentation control information, for selecting, using said performance measurement, one of said first and second subcollections for transmitting said selected subcollection from one of said presentation content supplying nodes to said first client node.

2. (Once Amended) A network presentation distribution system as claimed in Claim 1, wherein, for determining which of said first and second subcollections to transmit to said first client node via said network communications network, said segment selector includes a network analyzer for

fuboTV Media Inc.
Exhibit 1015
Page 159

[analyzing transmission characteristics] determining said performance measurement using one or more of: (a) a data transmission rate of said communications network; (b) a fluctuation in bandwidth of said communications network; and (c) a statistical prediction of a bandwidth of said communications network [when determining which of said first and second subcollections to transmit to said first client node via said network communications network].

A1 Incl.

3. (Once Amended) A system as claimed in Claim 1, wherein said first and second subcollections are [stored on] accessed by said first client node from first and second different ones of said content supplying nodes wherein at least one of said subcollections is accessible via first and second routes through the communications network;

wherein: (a) said first route includes said first content supplying node and not said second content supplying node; and (b) said second route includes said second content supplying node and not said first content supplying node.

In Claim 5, line 3, following "portion of", please insert --one of: the Internet, and--.

A2 cont

8. (Once Amended) A network presentation distribution system as claimed in Claim 1, wherein said first subcollection

fuboTV Media Inc.
Exhibit 1015
Page 160

A2 incl.

includes a first video portion, and said second subcollection includes a different second video portion that corresponds in content with said first video portion, and wherein said first and second video portions have substantially different expected data transmission rates for being transmitted between said first client node, and one or more of said presentation content supplying nodes.

In Claim 9, line 4, following "node", please insert --concurrently and--.

In Claim 10, line 4, following ", and" please insert --at--.

A3

12. (Once Amended) A network presentation distribution system as claimed in Claim 1, further including a network interface component, residing on said first client node, for receiving said presentation control information and transmitting a request for a subcollection of said group to one of said content supplying nodes, wherein said network interface component includes a network browser for communicating with said communications network.

A4 Cont

14. (Once Amended) A network presentation distribution system as claimed in Claim 1, further including a content

manager for [providing] distributing, via said communications network, at least a video portion of one or more of said first and second subcollections of said presentation to said content supplying nodes prior to a commencement of a performance of said presentation, wherein during said performance of said presentation, said first subcollection is presented at said first client node, and said second subcollection is simultaneously presented at a second client node receiving said presentation control information.

14 mod

15. (Once Amended) A network presentation distribution system as claimed in Claim 1, wherein there are first and second versions of said presentation performed synchronously, respectively, at said first client node and a second client node for receiving said presentation control information, wherein there is a correspondence in content between at least a majority of segments in said first version with segments of said second version, and wherein said first and second versions have their corresponding audio portions in one or more of: different natural languages, and different encoding formats.

18. (Once Amended) A network presentation distribution system as claimed in Claim 1, wherein said presentation controlling node accesses a predetermined script for said

15 mod

fuboTV Media Inc.
Exhibit 1015
Page 162

presentation control information, said script identifying a sequence of segments of said collection for the presentation.

A5 cncld.

19. (Once Amended) A network presentation distribution system as claimed in Claim 1, further including a leader node [for] connected to said communications network, wherein said leader node is accessed by a leader [of] for controlling a performance of said presentation, wherein the leader directs a pace and content of the presentation performance provided to said client nodes.

23. (Once Amended) A network presentation distribution system for presenting a presentation, comprising:

6 m't

a first and second presentation content supplying nodes of a communications network, said first and second content supplying nodes for providing access to one or more collections of data segments of said presentation using said communications network;

a presentation controlling node for transmitting to at least a first client node, presentation control information used for identifying a first subcollection of said segments for presentation to a user at said first client node; and

a content node selector, activated [in response to] by said first client node [receiving] when said first client node receives said presentation control information, said content

fuboTV Media Inc.
Exhibit 1015
Page 163

node selector for selecting one of said first and second content supplying nodes for transmitting one of: (a) said first subcollection to said first client node using said communications network; and (b) an alternative subcollection of one or more of said segments predetermined as a replacement for said first subcollection for presenting at said first client node.

A6 mod.

24. (Once Amended) A network presentation distribution system as claimed in Claim 23, wherein said content node selector selects one of said first and second content supplying nodes [and] according to [one of: (a)] a value dependent on a measurement related to a previous data transmission rate between said first client node and at least one of said first and second content supplying nodes, wherein said value is expected to be indicative of a current data transmission rate [and (b) an expected data transmission rate] between said first client node, and at least one of said first and second content supplying nodes.

7 m.t

27. (Once Amended) A presentation system as claimed in Claim 23, wherein said presentation controlling node includes a presentation script processing component for generating presentation performance commands from a script for said presentation, wherein at least one of the following occur:

fuboTV Media Inc.
Exhibit 1015
Page 164

(a) for said first client node, said generated commands synchronize a display of a video content of said segments with a related audio content, (b) said presentation controlling node transmits said generated commands to at least a second client node, wherein a performance of said presentation at said first client node is synchronized with a performance of said presentation at said second client node.

47 incld.

30. (Once Amended) A network presentation distribution system for presenting a presentation, comprising:

one or more content supplying network nodes, each providing access to [able to provide] a corresponding plurality of segments for said presentation to a first of one or more network client nodes, via a communications network, wherein each of said segments provides a portion of a particular presentation;

48 cont

[a presentation controlling network node for transmitting presentation control information providing identities of segments in a collection of said segments when the presentation is performed at said first client node;

a presentation network component at said first client node, wherein, after receiving said presentation control information, said presentation network component transmits segment selection information, obtained using said presentation control information, to a first of said content

fuboTV Media Inc.
Exhibit 1015
Page 165

supplying nodes for obtaining the collection at said first client node;]

a network performance evaluator for obtaining a measurement of a performance of one or more transmissions from said communications network to said first client node;

a content node selector for determining a particular one of said content supplying nodes for supplying at least a portion of its corresponding plurality of segments to the first client node;

A8 Cm't

a segment selector [that uses one of: (a) the presentation control information, and (b) the segment selection information] for [identifying the] determining a collection of said segments to transmit from the [first] particular content supplying node to the first client node;

wherein at least one of said content node identifier and said segment selector is dependent upon said measurement for making its determination.

31. (Once Amended) A network presentation distribution system as claimed in Claim 30, wherein said [selection information] measurement depends on a data transmission characteristic to the first client node from one of the content supplying nodes, wherein said data transmission characteristic is dependent on one of a network data transmission rate and a measurement of network data

fuboTV Media Inc.
Exhibit 1015
Page 166

A8 cncld.

transmission errors, and said data transmission characteristic is expected to be indicative of a current transmission rate to the first client node from the one content supplying node.

33. (Once Amended) A network presentation distribution system as claimed in Claim 30, wherein [said] a presentation controlling network node synchronizes a performance of said presentation on said first client node with a performance of said presentation on a second of said client nodes so that a particular one or more of said segments are presented on said first client node synchronously with an alternative one or more segments being output by one of said content supplying nodes to said second client node, wherein said alternative one or more segments correspond in content to said particular one or more segments.

A9 in.t

34. (Once Amended) A network presentation distribution system as claimed in Claim 30, further including a presentation controlling network node for transmitting presentation control information providing identities of segments in a collection of said segments when the presentation is performed at said first client node, and wherein said presentation controlling network node includes network communication receiving means for receiving communication from a site of said first client node, said

fuboTV Media Inc.
Exhibit 1015
Page 167

communication related to a response to an inquiry of a presentation audience member at said first client node.

35. (Once Amended) A method for presenting a networked presentation, comprising:

storing, at one or more content supplying nodes, a plurality of segments of a presentation for [network] access via [one or more content supplying nodes of] a communications network, wherein there are first and second subcollections of [one or more] of [the] said plurality of segments, [each subcollection having a predetermined presentation order and there is a first and a second of the subcollections,,] and wherein said first subcollection is replaceable with said second subcollection when presenting the presentation;

A9 cont

obtaining one or more measurements related to an expected time for transmitting at least one of said first and second subcollections on the communications network to a first client node;

[identifying a plurality of network client nodes for presenting the presentation;

transmitting, via the communications network, presentation control information to a first and second of the client nodes;

first identifying] determining, using said measurements, one of said first and second subcollections for [presenting

fuboTV Media Inc.
Exhibit 1015
Page 168

at] transmitting, via the communications network, from one of said content supplying nodes to the first client node[using said transmitted presentation control information;

second identifying said second subcollection for presenting at the second user node in place of the first subcollection, using said transmitted presentation control information;

A9 amd.

first retrieving said first subcollection from said content supplying nodes for presenting at the first client node;

second retrieving said second subcollection from said content supplying nodes for presenting at the second client node substantially simultaneously with the presenting of the first subcollection at the first client node].

37. (Once Amended) A method as claimed in Claim 35, further including a step of [synchronizing] synchronously presenting the presentation at the first client node with presenting the presentation at [the] a second client node so that each of the subcollections presented at the first client node is presented substantially simultaneously with [one of] the second subcollection[s, having the same order,] at the second client node.

A10

fuboTV Media Inc.
Exhibit 1015
Page 169

In Claim 38, line 2, please delete "synchronizing" and insert --synchronously presenting--.

39. (Once Amended) A method as claimed in Claim 35, further including: [wherein said step of]

first retrieving [includes retrieving] the first subcollection by the first client node from a first of the content supplying nodes; and

[said step of] second retrieving [includes retrieving] the second subcollection by [the] a second client node from a second of the content supplying nodes different from the first content supplying node.

All sent

40. (Once Amended) A method as claimed in Claim 35, further including: [synchronizing the]

presenting [of] the first and second subcollections to first and second users at the first and second client nodes, respectively; [with a corresponding]

synchronizing a presentation, at sites for said first and second client nodes, of a same audio portion [of the presentation provided concurrently at the sites of the first and second client nodes,] with the presentations of said first and second subcollections, wherein the [corresponding] audio portion is provided to the sites using a different network protocol from a protocol used in [said step of] transmitting

fuboTV Media Inc.
Exhibit 1015
Page 170

said first and second subcollections via the communications network.

41. (Once Amended) A method for presenting a networked presentation, comprising:

storing a plurality of segments for a presentation, wherein said segments are network accessible from one or more content supplying [network] nodes of a communications network for presenting the presentation at one or more client nodes, and wherein for a first subcollection of one or more of the segments, said first subcollection is capable of being accessed, via the communications network, from a first of the content supplying nodes, and at least one of (A1) and (A2) following:

All Cm't

[(a)] (A1) said first subcollection has a corresponding different second subcollection of one or more of said segments that has been identified as a replacement for the first subcollection in a performance of said presentation, and

[(b)] (A2) said first subcollection is capable of being accessed, via the communications network, from a second of said content supplying nodes;

providing for a first [and second] of said client nodes, a [for network] transmission of the presentation segments thereto [to the client nodes], wherein [at least] the first

fuboTV Media Inc.
Exhibit 1015
Page 171

client node has network access to at least one of (B1) and (B2) following:

(B1) the first and second subcollections, and

(B2) the first and second content supplying nodes;

All Concld.

determining, for the first client node, a measurement indicative of an expected network performance of [a] the communications network for transmitting the first subcollection from the first content supplying node to the first client node;

selecting at least one of: the second subcollection and the second content supplying node when said measurement is indicative of an undesirable performance of the performance of the presentation at the first client node.

In Claim 42, line 9, following "communication", please delete --,--.

43. (Once Amended) A method of presenting a multimedia presentation:

A12 Con't

storing a script of one or more presentation commands for performing multimedia segments of said presentation wherein a first of said one or more commands references one or more unresolved identifiers of one or more network content supplying nodes providing access to at least a video portion

fuboTV Media Inc.
Exhibit 1015
Page 172

of a first subcollection of one or more of said segments via a communications network;

storing a communications network identifier for each of one or more of said content supplying nodes providing network access to said first subcollection;

identifying one or more client nodes for receiving a performance of said presentation;

resolving said unresolved identifiers of a first of said commands using said stored communications network identifiers for thereby obtaining a resolved command;

A12 cont

performing said resolved command at each of said client nodes during said performance by requesting said first subcollection from [said] a first of said content supplying nodes;

requesting by a first of said client nodes, when said first subcollection is not received by said first client node within a predetermined time, one of: (a) an alternative subcollection of one or more of said segments, in place of said first subcollection, from one of said content supplying nodes, and (b) said first subcollection from an alternate one of said content supplying nodes.

44. (Once Amended) A method as claimed in Claim 43, further including transmitting said resolved command from a presentation controlling node to each of said client nodes via

fuboTV Media Inc.
Exhibit 1015
Page 173

A12 concld.

at least a portion of one of: the Internet, and a network using TCP/IP as a communication protocol.

In Claim 45, line 1, please delete "45" and insert --43--

Please add the following Claims 46-56.

46. (New) The method as claimed in Claim 35, wherein said step of obtaining includes obtaining a value indicative of one or more of:

A13 cont

(a) a size of at least one of said first and second subcollections;

(b) a bandwidth of previous transmissions via the communications network to the first client node;

(c) an overhead indicative of a protocol used in transmissions via the communication network to the first client node;

(d) an allotted time for said first client to receive at least one of said first and second subcollections;

(e) a fluctuation in bandwidth of the communications network;

(f) an error rate for the first client node from the communications network;

(g) a predictive statistical expectation of a bandwidth on the communications network.

fuboTV Media Inc.
Exhibit 1015
Page 174

47. (New) The method as claimed in Claim 35, further including:

establishing whether at least one of said first and second subcollections are cached at said first client node within a desired time prior to a performance of the cached subcollection.

48. (New) The method as claimed in Claim 47, further including determining said desired time by comparing one or more of:

A13 omit

(a) a measurement related to the performance of the presentation at a second client node that receives said segments via the communications network;

(b) a predetermined length of time; and

(c) a length of time determined by a leader for the presentation.

49. The method as claimed in Claim 47, further including determining said desired time by comparing: (a) a transmission rate of the communications network between the first client node and at least one of said content supplying nodes; and (b) a transmission rate of the communications network between a second client node also receiving said presentation, and at last one of said content supplying nodes.

fuboTV Media Inc.
Exhibit 1015
Page 175

50. (New) A method as claimed in Claim 41, wherein said providing step includes accessing said segments: (a) from said first content supplying node via a first route through the communications network, and (b) from said second content supplying node via a second route through the communications network;

wherein said first route does not include said second content supplying node, and said second route does not include said first content supplying node.

A13 cont

51. (New) A network presentation distribution system for presenting a presentation, comprising:

one or more presentation content supplying nodes of a communications network, said content supplying nodes for providing access to a collection of data segments of said presentation using said communications network, wherein said collection includes first and second subcollections of one or more of said segments;

a presentation controlling node for transmitting to at least a first client node, via the communications network, presentation control information used for identifying a group of subcollections of said segments, said group including said first and second subcollections; and

fuboTV Media Inc.
Exhibit 1015
Page 176

a first segment selector, activated in response to said first client node receiving said presentation control information, for selecting one of said first and second subcollections for transmitting said selected subcollection from one of said presentation content supplying nodes to said first client node;

wherein said first segment selector includes a comparator for comparing (a) a value indicative of a length of time expected to receive one of said first and second subcollections, and (b) a value indicative of: (i) a length of time related to one or more other client nodes receiving one or more subcollections of said collection, (ii) a predetermined default length of time, and (iii) a length of time determined by a leader of said presentation performance.

A13 cont

52. (New) A network presentation distribution system for presenting a presentation, comprising:

one or more presentation content supplying nodes of a communications network, said content supplying nodes for providing access to a collection of data segments of said presentation using said communications network, wherein said collection includes first and second subcollections of one or more of said segments;

a presentation controlling node for transmitting to at least a first client node, via the communications network,

fuboTV Media Inc.
Exhibit 1015
Page 177

presentation control information used for identifying a group of subcollections of said segments, said group including said first and second subcollections; and

a first segment selector, activated in response to said first client node receiving said presentation control information, for selecting one of said first and second subcollections for transmitting said selected subcollection from one of said presentation content supplying nodes to said first client node.

A13 cont

53. (New) A network presentation distribution system as claimed in Claim 52, further including a phone bridge controller for controlling one or more telephone bridges providing audio communication during a performance of the presentation, through a telephone at a client site having said first client node, wherein said telephone provides the audio communication to the client site different from said communications network.

54. (New) A network presentation distribution system for presenting a presentation, comprising:

a first and second presentation content supplying nodes of a communications network, said first and second content supplying nodes for providing access to one or more

fuboTV Media Inc.
Exhibit 1015
Page 178

collections of data segments of said presentation using said communications network;

a presentation controlling node for transmitting to at least a first client node, presentation control information used for identifying a first subcollection of said segments for presentation at said first client node; and

a content node selector, activated in response to said first client node receiving said presentation control information, for selecting one of said first and second content supplying nodes for transmitting one of: (a) said first subcollection to said first client node using said communications network; and (b) an alternative subcollection of one or more of said segments predetermined as a replacement for said first subcollection;

wherein a presentation request from said first client node to one of said content supplying nodes includes at least one of: (a) an identification of a version of said presentation, said version for a predetermined group of presentation audience members, (b) an identification of one of said first and second subcollections identified in a predetermined script for said presentation; and (c) information for identifying an alternative segment determined by a leader of a performance of said presentation, wherein said alternative segment is not identified in said script.

fuboTV Media Inc.
Exhibit 1015
Page 179

55. (New) A network presentation distribution system for presenting a presentation, comprising:

a first and second presentation content supplying nodes of a communications network, said first and second content supplying nodes for providing access to one or more collections of data segments of said presentation using said communications network;

a presentation controlling node for transmitting to at least a first client node, presentation control information used for identifying a first subcollection of said segments for presentation at said first client node;

a content node selector, activated in response to said first client node receiving said presentation control information, for selecting one of said first and second content supplying nodes for transmitting one of: (a) said first subcollection to said first client node using said communications network; and (b) an alternative subcollection of one or more of said segments predetermined as a replacement for said first subcollection; and

a phone bridge controller for routing presentation related audio communications to a client site having said first client node, via one or more phone bridges, wherein a telephone at said client site transforms the presentation related audio communications into an audible communication having natural language speech included therein.

fuboTV Media Inc.
Exhibit 1015
Page 180

56. (New) A network presentation distribution system for presenting a presentation, comprising:

a first and second presentation content supplying nodes of a communications network, said first and second content supplying nodes for providing access to one or more collections of data segments of said presentation using said communications network;

a presentation controlling node for transmitting to at least a first client node, presentation control information used for identifying a first subcollection of said segments for presentation at said first client node;

a content node selector, activated in response to said first client node receiving said presentation control information, for selecting one of said first and second content supplying nodes for transmitting one of: (a) said first subcollection to said first client node using said communications network; and (b) an alternative subcollection of one or more of said segments predetermined as a replacement for said first subcollection;

wherein said presentation controlling node includes a presentation script processing component for generating presentation performance commands from a script for said presentation, wherein for said first client node, said generated commands synchronize a display of a video content of said segments with a related audio content; and

fuboTV Media Inc.
Exhibit 1015
Page 181

A13

wherein said presentation controlling node includes a phone bridge controller for directing a phone bridge to provide audio communications between a client site having said first client node and one of: said presentation controlling node and a leader of a performance of said presentation, wherein said phone bridge routes presentation performance related audio information differently from network communications between said presentation controlling node and first client via said communications network.

REMARKS

Enclosed is a check in the amount of $267.00 as payment for the additional claim fees for newly added Claims 46-56. Applicants doe not believe that any other fees are due with this Preliminary Amendment. However, in the event that additional fees are due, please debit Deposit Account No. 19-1970.

Respectfully submitted,

SHERIDAN ROSS P.C.

By: _____

Todd P. Blakely
Registration No. 31,328
1700 Lincoln Street, Suite 3500
Denver, Colorado 80203
(303) 863-9700

Date: February 3, 1999

fuboTV Media Inc.
Exhibit 1015
Page 182

Transaction History Date 1999-02-09
Date information retrieved from USPTO Patent Application Information Retrieval (PAIR) system records at www.uspto.gov

#4

AU 2756

OIPE FEB 9 1999

IN THE UNITED STATES PATENT AND TRADEMARK OFFICE

In Re the Application of:	Group Art Unit: 2756
JOHNSON et al.	Examiner:
Serial No.: 09/052,862	INFORMATION DISCLOSURE STATEMENT
Filed: March 31, 1998	
Atty. File No.: 3654-1	
For: "METHOD AND SYSTEM FOR PROVIDING A PRESENTATION ON A NETWORK"	

RECEIVED
FEB 16 1999
Group 2700

CERTIFICATE OF MAILING

I HEREBY CERTIFY THAT THIS CORRESPONDENCE IS BEING DEPOSITED WITH THE UNITED STATES POSTAL SERVICE AS FIRST CLASS MAIL IN AN ENVELOPE ADDRESSED TO ASSISTANT COMMISSIONER FOR PATENTS, WASHINGTON, D.C., 20231 ON FEBRUARY 4, 1999.

SHERIDAN ROSS P.C.

BY: Constance D. Swett

Assistant Commissioner for Patents
Washington, D.C. 20231

Dear Sir:

Pursuant to Applicants' duty of disclosure under 37 CFR § 1.56 and 37 CFR §§ 1.97-1.98, Applicants hereby provide a copy of the document identified on the enclosed PTO Form 1449. Applicants do not admit that such document, alone or in combination with any other document, is considered to be material to patentability as defined in 37 CFR § 1.56(b). Moreover, the inclusion of this document is not to be construed as an admission by Applicants that such document is prior art as to the above-identified patent application.

Respectfully submitted,

SHERIDAN ROSS P.C.

By: Todd P. Blakely

Todd P. Blakely
Registration No. 31,328
1700 Lincoln Street, Suite 3500
Denver, Colorado 80203
(303) 863-9700

Date: February 4, 1999

SHEET 1 OF 1

FORM PTO-1449 U.S. DEPARTMENT OF COMMERCE PATENT AND TRADEMARK OFFICE	ATTY. DOCKET NO. 3654-1	SERIAL NO. 09/052,862
INFORMATION DISCLOSURE STATEMENT (Use several sheets if necessary)	APPLICANT JOHNSON et al.	
	FILING DATE March 31, 1998	GROUP ART Group 2700

RECEIVED FEB 16 1999

U.S. PATENT DOCUMENTS

*EXAMINER INITIAL		DOCUMENT NUMBER	DATE	NAME	CLASS	SUB CLASS	FILING DATE IF APPROP.
AR	A1	5,759,101	6/2/98	Von Kohorn	463	40	

FOREIGN PATENT DOCUMENTS

		DOCUMENT NUMBER	DATE	COUNTRY	CLASS	SUB CLASS	TRANSLATION	
							YES	NO
	A2							

OTHER ART (Including Author, Title, Date, Pertinent Pages, etc.)

	A3	
	A4	

EXAMINER Almari Romero	DATE CONSIDERED 12/17/99

*EXAMINER: Initial if reference considered, whether or not citation is in conformance with MPEP 609; Draw line through citation if not in conformance and not considered. Include copy of this form with next communication to applicant.

#1 GAU 2756 275 M.L.

RECEIVED
JUL 13 1999
Group 2700

OIPE JC82
JUL 06 1999
PATENT & TRADEMARK OFFICE

IN THE UNITED STATES PATENT AND TRADEMARK OFFICE

In Re the Application of:	Group Art Unit: 2756
JOHNSON et al.	Examiner:
Serial No.: 09/052,862	SECOND PRELIMINARY AMENDMENT
Filed: March 31, 1998	
Atty. File No.: 3654-1	
For: "METHOD AND SYSTEM FOR PROVIDING A PRESENTATION ON A NETWORK"	

CERTIFICATE OF MAILING

I HEREBY CERTIFY THAT THIS CORRESPONDENCE IS BEING DEPOSITED WITH THE UNITED STATES POSTAL SERVICE AS FIRST CLASS MAIL IN AN ENVELOPE ADDRESSED TO ASSISTANT COMMISSIONER FOR PATENTS, WASHINGTON, D.C., 20231 ON JUNE 30, 1999.

SHERIDAN ROSS P.C.

BY: Constance Rhodes

Assistant Commissioner for Patents
Washington, D.C. 20231

Dear Sir:

Prior to initial examination of this application, please enter the following Preliminary Amendment.

IN THE CLAIMS:

Please cancel all claims pending in the application, i.e., Claims 1-12, 14-31, 33-35, 37-56. Please add the following new Claims 57-96.

57. A network presentation distribution system for presenting a presentation, comprising:

B1 cont

one or more presentation content supplying nodes of a communications network, said content supplying nodes for providing access, by a first user at a first client node of the communications network, to a collection of data segments of said presentation using said communications network,

07/08/1999 ZABDALLA 00000051 09052862
01 FC:202 39.00 OP

30

B

wherein said collection includes first and second subcollections of one or more ~~of said~~ segments;

a presentation controlling node for transmitting to at least said first client node, via the communications network, presentation control information used for identifying said first and second subcollections;

a computational component for determining network performance information of the communications network, wherein said computational component determines said network performance information using network data obtained from network transmissions detected at said first client node;

B1 cm't

a first segment selector, activated after said first client node receives said presentation control information, for selecting, using said network performance information, one of said first and second subcollections for transmitting from one of said presentation content supplying nodes to said first client node; and

a presentation component at said first client node for presenting said selected one of said first and second subcollections to the first user.

2 ~~58~~. A network presentation distribution system as claimed in Claim 1 ~~57~~, for determining which of said first and second subcollections to transmit to said first client node, said computational component includes a network analyzer for

81 B

fuboTV Media Inc.
Exhibit 1015
Page 186

determining said network performance information using one or more of the following types of said network data: (a) a data transmission rate of said communications network at said first client node; (b) a fluctuation in bandwidth of said communications network at said first client node; and (c) a statistical prediction of a bandwidth of said communications network at said first client node.

3 ~~58~~. A network presentation distribution system as claimed in Claim 1 ~~57~~, wherein said first segment selector is activated in response to said first client node receiving said presentation control information, and is activated without an intervening manual input from the first user for requesting one of said first and second subcollections.

4 ~~60~~. A network presentation distribution system as claimed in Claim 1 ~~57~~, wherein a bandwidth of presentation transmissions on the communications network to the first client node varies sufficiently to affect the presenting of the presentation, and the varying bandwidth is substantially uncontrollable from said first client node, and said presentation content supplying nodes.

5 ~~61~~. A network presentation distribution system as claimed in Claim 1 ~~57~~, wherein at least one of said first and

72 B

fuboTV Media Inc.
Exhibit 1015
Page 187

second subcollections is accessible from first and second of said content supplying nodes via first and second routes;

wherein: (a) said first route includes said first content supplying node and not said second content supplying node; and (b) said second route includes said second content supplying node and not said first content supplying node.

over Ex

1 m.t

~~62. A system as claimed in Claim 57, wherein said first subcollection includes video with motion, and said second subcollection includes video with one of reduced motion and no motion, and said first subcollection is presented to the first user at said first client node simultaneously with said second subcollection being presented to a second user at a second client node.~~

~~63~~ 7. A network presentation distribution system as claimed in Claim ~~57~~ 1, wherein the communications network includes a portion of one of: the Internet, and a network using TCP/IP for communicating between at least one of:

(a) one of said content supplying nodes and said first client node;

(b) said presentation controlling node and said first client node;

(c) one of the content supplying nodes and said presentation controlling node.

83

B

fuboTV Media Inc.
Exhibit 1015
Page 188

8 ~~64~~. A network presentation distribution system as claimed in Claim 1 ~~57~~, wherein said first client node includes said first segment selector and a first presentation display component for displaying to the first user at said first client node, a first selection of one of said first and second subcollections, made by said first segment selector.

1 m't

9 ~~65~~. A network presentation distribution system as claimed in Claim 1 ~~57~~, wherein said first subcollection includes a first video portion, and said second subcollection includes a different second video portion that corresponds in content with said first video portion, and wherein said first and second video portions have substantially different expected data transmission rates for being transmitted to said first client node, and wherein said first segment selector uses said different expected data transmission rates in selecting one of said first and second subcollections.

10 ~~66~~. A network presentation distribution system as claimed in Claim 1 ~~57~~, wherein an audio portion for said first subcollection is transmitted to said first client node separately from said first subcollection via a phone bridge.

34 B

fuboTV Media Inc.
Exhibit 1015
Page 189

11 ~~67~~. A network presentation distribution system as claimed in Claim 1 ~~57~~, wherein said first segment selector is resident on said first client node and a second segment selector, activated in response to a second client node receiving said presentation control information, is resident on said second client node, wherein said first and second segment selectors each select, without user selection input, one of said first and second subcollections for simultaneous presenting of a same corresponding portion of the presentation.

31 in't

12 ~~68~~. A network presentation distribution system as claimed in Claim 1 ~~57~~, further including a network interface component, residing on said first client node, for receiving said presentation control information and transmitting a request for a subcollection of said collection of data segments to one of said content supplying nodes, wherein said network interface component includes a network browser for communicating with said communications network.

13 ~~69~~. A network presentation distribution system as claimed in Claim 1 ~~57~~, further including a content manager for distributing, via said communications network, at least a video portion of said first and second different subcollections of said presentation to said content supplying

fuboTV Media Inc.
Exhibit 1015
Page 190

nodes prior to a commencement of a performance of said presentation, wherein during said performance of said presentation, said first subcollection is presented at said first client node when received from said first content supplying node, and said second subcollection is simultaneously presented at a second client node when received from said second content supplying node after said second client node receives said presentation controlling information.

14

~~70~~. A network presentation distribution system as claimed in Claim ~~57~~ 1, wherein there are first and second versions of said presentation performed synchronously, respectively, at said first client node and a second client node receiving said presentation control information, wherein there is a correspondence in content between at least a majority of segments in said first version with segments of said second version, and wherein said first and second versions have their corresponding audio portions in different natural languages.

15

71. A network presentation distribution system as claimed in Claim ~~57~~ 1, further including a leader node that is accessed by a leader for controlling a performance of said presentation, wherein the leader directs a pace and content of

86

B

the presentation performance provided to said client nodes via said presentation controlling network node that synchronizes a performance of said presentation on said first client node with a performance of said presentation on a second client node so that a particular one or more of said segments are presented on said first client node synchronously with an alternative one or more segments being output by one of said content supplying nodes to said second client node, wherein said alternative one or more segments correspond in content to said particular one or more segments.

B1 Con't

16

~~72~~. A network presentation distribution system for presenting a presentation, comprising:

a first and second presentation content supplying nodes of a communications network, said first and second content supplying nodes for providing access to one or more collections of data segments of said presentation using said communications network;

a presentation controlling node for transmitting to at least a first client node, presentation control information used for identifying a first subcollection of said segments for presentation to a user at said first client node; and

a content node selector, activated after said first client node receives said presentation control information, said content node selector for selecting one of said first and

B

fuboTV Media Inc.
Exhibit 1015
Page 192

second content supplying nodes for transmitting one of: (a) said first subcollection to said first client node using said communications network; and (b) an alternative subcollection of one or more of said segments predetermined as a replacement for said first subcollection for presenting at said first node;

wherein said first client node transmits a presentation request to a selected one of said first and second content supplying nodes, said presentation request including at least one of: (a) an identification of a version of said presentation, said version for a predetermined group of presentation audience members, (b) an identification of one of said first and second subcollections identified in a predetermined script for said presentation; and (c) information for identifying an alternative segment determined by a leader of a performance of said presentation, wherein said alternative segment is not identified in said script.

31 cont

17

~~73~~. A network presentation distribution system as claimed in Claim ~~72~~ 16, wherein said content node selector changes from selecting said first content supplying node to selecting said second content supplying node according to a value dependent on a measurement related to a previous data transmission rate between said first client node and at least one of said first and second content supplying nodes, wherein

87

B

fuboTV Media Inc.
Exhibit 1015
Page 193

said value is expected to be indicative of a current data transmission rate between said first client node, and at least one of said first and second content supplying nodes.

15

74. A network presentation distribution system for presenting a presentation, comprising:

Sub E4

one or more content supplying network nodes able to provide a plurality of segments to a first of a plurality of network client nodes, via a communications network, wherein each of said segments provides a portion of a particular presentation;

a presentation controlling network node for transmitting presentation control information providing identities of segments in a collection of said segments when the presentation is performed at said first client node;

a presentation network component at said first client node, wherein, after receiving said presentation control information, said presentation network component transmits segment selection information, obtained using said presentation control information, to a first of said content supplying nodes for obtaining the collection at said first client node;

a segment selector that uses one of: (a) the presentation control information, and (b) the segment selection information

28

B

fuboTV Media Inc.
Exhibit 1015
Page 194

for identifying a first collection to transmit from the first content supplying node to the first client node;

wherein said presentation controlling network node synchronizes a performance of said presentation on said first client node with a performance of said presentation on a second client node so that a particular one or more of said segments are presented on said first client node synchronously with an alternative one or more segments being output by one of said content supplying nodes to said second client node, wherein said alternative one or more segments correspond in content to said particular one or more segments.

75. A network presentation distribution system as claimed in Claim 74, wherein said selection information depends on a data transmission characteristic to the first client node from one of the content supplying nodes;

wherein said data transmission characteristic is dependent on one of a network data transmission rate and a measurement of network data transmission errors; and

wherein said data transmission characteristic is expected to be indicative of a current transmission rate to the first client node from the one content supplying node.

76. A method for presenting a networked presentation, comprising:

fuboTV Media Inc.
Exhibit 1015
Page 195

storing a plurality of segments of a presentation for network access via one or more content supplying nodes of a communications network, wherein there are subcollections of one or more of the segments, each subcollection having a predetermined presentation order and there is a first and a second of the subcollections, wherein said first subcollection is replaceable with said second subcollection when presenting the presentation;

first identifying a plurality of network client nodes for presenting the presentation;

C

B1 con't

transmitting, via the communications network, presentation control information to a first and second of the client nodes;

first identifying said first subcollection for presenting at the first client node using said transmitted presentation control information;

second identifying said second subcollection for presenting at the second user node in place of the first subcollection, using said transmitted presentation control information;

first retrieving said first subcollection from said content supplying nodes for presenting at the first client node;

second retrieving said second subcollection from said content supplying nodes for presenting at the second client

B

fuboTV Media Inc.
Exhibit 1015
Page 196

node substantially simultaneously with the presenting of the first subcollection at the first client node.

77. A method as claimed in Claim 76, wherein said step of transmitting to the first and second client nodes is performed substantially simultaneously, using the Internet as at least a portion of the communications network.

78. A method as claimed in Claim 77, further including a step of synchronously presenting the presentation at the first client node with presenting the presentation at the second client node so that each of the subcollections presented at the first client node is presented substantially simultaneously with one of the second subcollection at the second client node.

79. A method as claimed in Claim 78, wherein said step of synchronizing includes obtaining, by said first client node, a network performance measurement of a network transmission from a first of the content supplying network nodes to the first client node.

80. A method as claimed in Claim 76, wherein said step of first retrieving includes retrieving the first subcollection by the first client node from a first of the content supplying nodes; and

fuboTV Media Inc.
Exhibit 1015
Page 197

said step of second retrieving includes retrieving the second subcollection by the second client node from a second of the content supplying nodes different from the first content supplying node.

26 ~~81~~. A method as claimed in Claim 21 ~~76~~, further including synchronizing the presenting of the first and second subcollections at the first and second client nodes with a corresponding audio portion of the presentation provided at the sites of the first and second client nodes, wherein the corresponding audio portion is provided to the sites using a different network protocol from a protocol used in said step of transmitting via the communications network.

31 ~~82~~. The method as claimed in Claim 20 ~~76~~, wherein said step of first identifying occurs prior to said step of first retrieving and said step of first identifying includes:

obtaining one or more measurements related to an expected time for transmitting said first subcollection to the first client node via the communications network;

wherein said one or more measurements are indicative of one or more of:

(a) a size of said first subcollection;

(b) a bandwidth of previous transmissions via the communications network to the first client node;

90 B

fuboTV Media Inc.
Exhibit 1015
Page 198

(c) an overhead indicative of a protocol used in transmissions via the communication network to the first client node;

(d) an allotted time for said first client to receive said first subcollection;

(e) a fluctuation in bandwidth of the communications network;

(f) an error rate for the first client node from the communications network;

(g) a predictive statistical expectation of a bandwidth on the communications network.

1 m.t

28 ~~83~~. The method as claimed in Claim 21 ~~76~~, further including:

establishing whether said first subcollection is cached at said first client node within a desired time prior to a performance of the cached subcollection.

sub E8 29 ~~84~~. The method as claimed in Claim 28 ~~83~~, further including determining said desired time by comparing one or more of:

(a) a measurement related to the performance of the presentation at said second client node that receives;

(b) a predetermined length of time; and

(c) a length of time determined by a leader for the presentation.

91

B

fuboTV Media Inc.
Exhibit 1015
Page 199

Sub E8

85. The method as claimed in Claim 83, further including determining said desired time by comparing: (a) a transmission rate of the communications network between the first client node and at least one of said content supplying nodes; and (b) a transmission rate of the communications network between said second client node, and at last one of said content supplying nodes.

31 Cont Sub E9

86. A method for presenting a networked presentation, comprising:

storing a plurality of segments for a presentation, wherein said segments are network accessible from one or more content supplying network nodes for presenting the presentation, and wherein for a first subcollection of one or more of the segments, said first subcollection is capable of being accessed from a first of the content supplying nodes, and at least one of:

(a) said first subcollection has a corresponding different second subcollection of one or more of said segments that has been identified as a replacement for the first subcollection, and

(b) said first subcollection is capable of being accessed from a second of said content supplying nodes;

C

providing for a first client made with ~~[and second] client node[s for]~~, a network transmission of the presentation[~~to the client~~

B

fuboTV Media Inc.
Exhibit 1015
Page 200

~~nodes], wherein [at least]~~ , wherein the first client node has network access to at least one of: the first and second subcollections, and the first and second content supplying nodes;

determining, for the first client node, a measurement indicative of an expected network performance of a communications network for transmitting the first subcollection from the first content supplying node to the first client node;

selecting at least one of: the second subcollection and the second content supplying node when said measurement is indicative of an undesirable performance of the performance of the presentation at the first client node.

~~87~~ 32. A method as claimed in Claim ~~86~~ 31, wherein said providing step includes accessing, by the first client node, said segments: (a) from said first content supplying node via a first route through the communications network, and (b) from said second content supplying node via a second route through the communications network;

wherein said first route does not include said second content supplying node, and said second route does not include said first content supplying node.

92

B

fuboTV Media Inc.
Exhibit 1015
Page 201

23 ~~88~~. A presentation system for presenting a multimedia presentation having video and audio portions that correspond in content, comprising:

one or more video supplying network nodes for communicating one or more video portions of the multimedia presentation to one or more networked client nodes;

a phone bridge controller for providing commands to one or more phone bridges for routing presentation related audio communication, to a corresponding telephony device at each site having one of the client nodes, wherein: (a) each of one or more portions of the related audio communication corresponds in content with one of the video portions, and (b) the telephony devices at the sites transform the presentation related audio communications into an audible form having natural language speech included therein;

B1 cont

a presentation controller for synchronizing a presenting, at the client nodes, of predetermined ones of the video and audio portions that correspond in content, wherein for each of the client nodes, said presentation controller: (a) communicates with the client node for providing information used for identifying a particular one of the video portions for transmission from one of the video supplying network nodes to the client node; and (b) communicates with said phone bridge controller for routing, to the client node, the audio

93 B

fuboTV Media Inc.
Exhibit 1015
Page 202

portion corresponding in content with the particular video portion.

89. A method of presenting a multimedia presentation:

storing a script of one or more presentation commands for performing multimedia segments of said presentation wherein a first of said one or more commands references one or more unresolved identifiers of one or more network content supplying nodes providing access to at least a video portion of a first subcollection of one or more of said segments via a communications network;

storing a communications network identifier for each of one or more of said content supplying nodes providing network access to said first subcollection;

identifying one or more client nodes for receiving a performance of said presentation;

resolving said unresolved identifiers of a first of said commands using said stored communications network identifiers for thereby obtaining a resolved command;

performing said resolved command at each of said client nodes during said performance by requesting said first subcollection from said first content supplying node;

requesting by a first of said client nodes, when said first subcollection is not received by said first client node within a predetermined time, one of: an alternative subcollection of one or more of said segments, in place of

fuboTV Media Inc.
Exhibit 1015
Page 203

said first subcollection, from one of said content supplying nodes, and said first subcollection from an alternate one of said content supplying nodes.

35 90. A method as claimed in Claim 33 34, further including transmitting said resolved command from a presentation controlling node to each of said client nodes via at least a portion of one of: the Internet, and a network using TCP/IP as a communication protocol.

31 cm't

91. A network presentation distribution system for presenting a presentation, comprising:

one or more presentation content supplying nodes of a communications network, said content supplying nodes for providing access to a collection of data segments of said presentation using said communications network, wherein said collection includes first and second subcollections of one or more of said segments;

a presentation controlling node for transmitting to at least a first client node, via the communications network, presentation control information used for identifying a group of subcollections of said segments, said group including said first and second subcollections; and

a first segment selector, activated in response to said first client node receiving said presentation control

95 B

fuboTV Media Inc.
Exhibit 1015
Page 204

information, for selecting one of said first and second subcollections for transmitting said selected subcollection from one of said presentation content supplying nodes to said first client node;

wherein said first segment selector includes a comparator for comparing (a) a value indicative of a length of time expected to receive one of said first and second subcollections, and (b) a value indicative of: (i) a length of time related to one or more other client nodes receiving one or more subcollections of said collection, (ii) a predetermined default length of time, and (iii) a length of time determined by a leader of said presentation performance.

~~92~~. A network presentation distribution system for presenting a presentation, comprising:

one or more presentation content supplying nodes of a communications network, said content supplying nodes for providing access to a collection of data segments of said presentation using said communications network, wherein said collection includes first and second subcollections of one or more of said segments;

a presentation controlling node for transmitting to at least a first client node, via the communications network, presentation control information used for identifying said first and second subcollections;

96

B

fuboTV Media Inc.
Exhibit 1015
Page 205

a first segment selector, activated in response to said first client node receiving said presentation control information, for selecting one of said first and second subcollections for transmitting said selected subcollection from one of said presentation content supplying nodes to said first client node; and a phone bridge controller for controlling one or more telephone bridges providing audio communication during a performance of the presentation, through a telephone at a client site having said first client node, wherein said telephone provides the audio communication to the client site different from said communications network.

sub E12

93. A network presentation distribution system for presenting a presentation, comprising:

a first and second presentation content supplying nodes of a communications network, said first and second content supplying nodes for providing access to one or more collections of data segments of said presentation using said communications network;

a presentation controlling node for transmitting to at least a first client node, presentation control information used for identifying a first subcollection of said segments for presentation at said first client node;

a content node selector, activated in response to said first client node receiving said presentation control

97

B

fuboTV Media Inc.
Exhibit 1015
Page 206

information, for selecting one of said first and second content supplying nodes for transmitting one of: (a) said first subcollection to said first client node using said communications network; and (b) an alternative subcollection of one or more of said segments predetermined as a replacement for said first subcollection; and

a phone bridge controller for routing presentation related audio communications to a client site having said first client node, via one or more phone bridges, wherein a telephone at said client site transforms the presentation related audio communications into an audible communication having natural language speech included therein.

41 ~~94~~. A network presentation distribution system for presenting a presentation, comprising:

a first and second presentation content supplying nodes of a communications network, said first and second content supplying nodes for providing access to one or more collections of data segments of said presentation using said communications network;

a presentation controlling node for transmitting to at least a first client node, presentation control information used for identifying a first subcollection of said segments for presentation at said first client node;

98

B

fuboTV Media Inc.
Exhibit 1015
Page 207

a content node selector, activated in response to said first client node receiving said presentation control information, for selecting one of said first and second content supplying nodes for transmitting one of: (a) said first subcollection to said first client node using said communications network; and (b) an alternative subcollection of one or more of said segments predetermined as a replacement for said first subcollection; and

a phone bridge controller for routing presentation related audio communications to a client site having said first client node, via one or more phone bridges, wherein a telephone at said client site transforms the presentation related audio communications into an audible communication having natural language speech included therein.

95. A network presentation distribution system for presenting a presentation, comprising:

a first and second presentation content supplying nodes of a communications network, said first and second content supplying nodes for providing access to one or more collections of data segments of said presentation using said communications network;

a presentation controlling node for transmitting to at least a first client node, presentation control information

used for identifying a first subcollection of said segments for presentation at said first client node;

a content node selector, activated in response to said first client node receiving said presentation control information, for selecting one of said first and second content supplying nodes for transmitting one of: (a) said first subcollection to said first client node using said communications network; and (b) an alternative subcollection of one or more of said segments predetermined as a replacement for said first subcollection;

wherein said presentation controlling node includes a presentation script processing component for generating presentation performance commands from a script for said presentation, wherein for said first client node, said generated commands synchronize a display of a video content of said segments with a related audio content; and

wherein said presentation controlling node includes a phone bridge controller for directing a phone bridge to provide audio communications between a client site having said first client node and one of: said presentation controlling node and a leader of a performance of said presentation, wherein said phone bridge routes presentation performance related audio information differently from network communications between said presentation controlling node and first client via said communications network.

Sub-E 13

110 ~~96~~. A network presentation distribution system for presenting a presentation on a communications network having unexpected network performance fluctuations at a user node, comprising:

B1 concl'd.

one or more presentation content supplying nodes of a communications network, said content supplying nodes for providing access, by a user at the user node of the communications network, to a collection of data segments of said presentation using said communications network, wherein said collection includes first and second subcollections of one or more of said segments;

a computational component for determining network performance information of the communications network, wherein said computational component determines said network performance information using network data obtained from network transmissions detected at said user node;

a segment selector, activated during the presentation for selecting, using said network performance information, one of said first and second subcollections for transmitting from one of said presentation content supplying nodes to said user node; and

a presentation component at said user node for presenting said selected one of said first and second subcollections to the user.

13

fuboTV Media Inc.
Exhibit 1015
Page 210

REMARKS

Applicants have previously submitted additional claim fees for 53 total claims and 12 independent claims. Following entry of this Second Preliminary Amendment, 40 total claims and 13 independent claims will be pending in the application. Enclosed is a check in the amount of $39.00 as payment of the additional claim fee for one additional independent claim in newly added Claims 57-96. Applicants do not believe that any other fees are due with this Preliminary Amendment. However, in the event that additional fees are due, please debit Deposit Account No. 19-1970.

Respectfully submitted,

SHERIDAN ROSS P.C.

By: _____

Todd P. Blakely
Registration No. 31,328
1700 Lincoln Street, Suite 3500
Denver, Colorado 80203
(303) 863-9700

Date: June 30, 1997

B

fuboTV Media Inc.
Exhibit 1015
Page 211

GJ 2756
2757

PATENT APPLICATION

#7

IN THE UNITED STATES PATENT AND TRADEMARK OFFICE

RECEIVED
AUG - 9 1999
TECH CENTER 2700

In Re the Application of:

JOHNSON et al.

Serial No.: 09/052,862

Filed: March 31, 1998

Atty. File No.: 3654-1

For: "METHOD AND SYSTEM FOR PROVIDING A PRESENTATION ON A NETWORK"

OIPE JC48
AUG 06 1999
PATENT & TRADEMARK OFFICE

Group Art Unit: 2756

Examiner:

THIRD SUPPLEMENTAL INFORMATION DISCLOSURE STATEMENT

CERTIFICATE OF MAILING

I HEREBY CERTIFY THAT THIS CORRESPONDENCE IS BEING DEPOSITED WITH THE UNITED STATES POSTAL SERVICE AS FIRST CLASS MAIL IN AN ENVELOPE ADDRESSED TO ASSISTANT COMMISSIONER FOR PATENTS, WASHINGTON, DC 20231 ON August 2, 1999.

SHERIDAN ROSS P.C.

BY Christeyl L. Rossow

Assistant Commissioner
for Patents
Washington, D.C. 20231

Dear Sir:

Pursuant to Applicants' duty of disclosure under 37 CFR § 1.56 and 37 CFR §§ 1.97-1.98, Applicants hereby provide a copy of each of the documents identified on the enclosed PTO Form 1449, although Applicants do not admit that any of such documents, alone or in any combination, is considered to be material to patentability as defined in 37 CFR § 1.56(b). Moreover, the inclusion of these documents is not to be construed as an admission by Applicants that each such document is prior art as to the above-identified patent application.

Respectfully submitted,

SHERIDAN ROSS P.C.

By: _____

Todd P. Blakely
Registration No. 31,328
1700 Lincoln Street, Suite 3500
Denver, Colorado 80203
(303) 863-9700

Date: Aug. 2, 1999

m:\3654\-1\ids-suppl3

OIPE JC48
AUG 0 6 1999
PATENT & TRADEMARK OFFICE

SHEET 1 OF 1

FORM PTO-1449 U.S. DEPARTMENT OF COMMERCE PATENT AND TRADEMARK OFFICE	ATTY. DOCKET NO. 3654-1	SERIAL NO. 09/052,862
INFORMATION DISCLOSURE STATEMENT (Use several sheets if necessary)	APPLICANT JOHNSON et al.	
	FILING DATE March 31, 1998	GROUP ART

RECEIVED AUG - 9 1999 TECH CENTER 2700

U.S. PATENT DOCUMENTS

*EXAMINER INITIAL		DOCUMENT NUMBER	DATE	NAME	CLASS	SUB CLASS	FILING DATE IF APPROP.
	AA	5,684,918	11-4-97	Abecassis	386	83	
	AB	5,758,257	5-26-98	Herz et al.	455	2	

FOREIGN PATENT DOCUMENTS

		DOCUMENT NUMBER	DATE	COUNTRY	CLASS	SUB CLASS	TRANSLATION YES	TRANSLATION NO

OTHER ART (Including Author, Title, Date, Pertinent Pages, etc.)

EXAMINER	DATE CONSIDERED 12/17/99

*EXAMINER: Initial if reference considered, whether or not citation is in conformance with MPEP 609; Draw line through citation if not in conformance and not considered. Include copy of this form with next communication to applicant.

m:\3654\-1\1449-suppl.3

Transaction History Date 1999-09-20
Date information retrieved from USPTO Patent Application Information Retrieval (PAIR) system records at www.uspto.gov

WP 8 ~~756~~ 2757

PATENT APPLICATION #8

8 3ond 9/22/99

IN THE UNITED STATES PATENT AND TRADEMARK OFFICE

In Re the Application of:	Group Art Unit: 2756
JOHNSON et al.	Examiner:
Serial No.: 09/052,862	**FOURTH SUPPLEMENTAL INFORMATION DISCLOSURE STATEMENT**
Filed: March 31, 1998	
Atty. File No.: 3654-1	
For: "METHOD AND SYSTEM FOR PROVIDING A PRESENTATION ON A NETWORK"	

PATENT & TRADEMARK OFFICE SEP 20 1999 OIPE JC67

CERTIFICATE OF MAILING

I HEREBY CERTIFY THAT THIS CORRESPONDENCE IS BEING DEPOSITED WITH THE UNITED STATES POSTAL SERVICE AS FIRST CLASS MAIL IN AN ENVELOPE ADDRESSED TO THE ASSISTANT COMMISSIONER OF PATENTS, WASHINGTON, DC 20231 ON September 13, 1999.

SHERIDAN ROSS P.C.

BY: Charles C. Rossow

Assistant Commissioner for Patents
Washington, D.C. 20231

Dear Sir:

Pursuant to Applicants' duty of disclosure under 37 CFR § 1.56, Applicants hereby submit this Fourth Supplemental Information Disclosure Statement with a copy of the document identified on the enclosed PTO Form 1449, although Applicants do not admit that any of such documents, alone or in any combination, is considered to be material to patentability as defined in 37 CFR § 1.56(b). Moreover, the inclusion of these documents is not to be construed as an admission by Applicants that each such document is prior art as to the above-identified patent application.

RECEIVED SEP 21 1999 TC 2700 MAIL ROOM

Note: The law firm of Sheridan Ross P.C. has moved. The current correspondence address for this application is:

Sheridan Ross P.C.
Suite 1200
1560 Broadway
Denver CO 80202-5141

A change of address notice for this application has been submitted to the U.S. Patent and Trademark Office.

Respectfully submitted,

SHERIDAN ROSS P.C.

By: _____

Todd P. Blakely
Registration No. 31,328
1560 Broadway, Suite 1200
Denver, Colorado 80202-5141
(303) 863-9700

Date: Sept. 13, 1999

m:\3654\-1\ids-suppl04

RECEIVED
SEP 21 1999
TC 2700 MAIL ROOM

fuboTV Media Inc.
Exhibit 1015
Page 215

OIPE JC67
SEP 20 1999
PATENT & TRADEMARK OFFICE

SHEET 1 OF 1

FORM PTO-1449 U.S. DEPARTMENT OF COMMERCE PATENT AND TRADEMARK OFFICE	ATTY. DOCKET NO. 3654-1	SERIAL NO. 09/052,862
INFORMATION DISCLOSURE STATEMENT (Use several sheets if necessary)	APPLICANT JOHNSON et al.	
	FILING DATE March 31, 1998	GROUP ART 2756

U.S. PATENT DOCUMENTS

*EXAMINER INITIAL		DOCUMENT NUMBER	DATE	NAME	CLASS	SUB CLASS	FILING DATE IF APPROP.
AL	AA	5,944,791	Aug. 31, 1999	Scherpbier	709	218	

FOREIGN PATENT DOCUMENTS

		DOCUMENT NUMBER	DATE	COUNTRY	CLASS	SUB CLASS	TRANSLATION YES	TRANSLATION NO

OTHER ART (Including Author, Title, Date, Pertinent Pages, etc.)

EXAMINER Alma Romero	DATE CONSIDERED 12/17/99

*EXAMINER: Initial if reference considered, whether or not citation is in conformance with MPEP 609; Draw line through citation if not in conformance and not considered. Include copy of this form with next communication to applicant.

:\3654\-1\1449-suppl04

#11

UNITED STATES D. .RTMENT OF COMMERCE
Patent and Trademark Office

ASSISTANT SECRETARY AND COMMISSIONER
OF PATENTS AND TRADEMARKS
Washington, D.C. 20231

CHANGE OF ADDRESS/POWER OF ATTORNEY

OCATION 27X1 SERIAL NUMBER 09052862 PATENT NUMBER

THE CORRESPONDENCE ADDRESS HAS BEEN CHANGED TO CUSTOMER # 22442

THE PRACTITIONERS OF RECORD HAVE BEEN CHANGED TO CUSTOMER # 22442

THE FEE ADDRESS HAS BEEN CHANGED TO CUSTOMER # 22442

ON 12/14/99 THE ADDRESS OF RECORD FOR CUSTOMER NUMBER 22442 IS:

SHERIDAN ROSS PC
1560 BROADWAY
SUITE 1200
DENVER CO 80202

AND THE PRACTITIONERS OF RECORD FOR CUSTOMER NUMBER 22442 ARE:

9127	30980	31071	31264	31328	31713	32020	32547	33005	33374
5536	37739	38172	38613	38942	39617	40638	40945	42460	42499
2801	43616	44189							

PTO INSTRUCTIONS: PLEASE TAKE THE FOLLOWING ACTION WHEN THE CORRESPONDENCE ADDRESS HAS BEEN CHANGED TO CUSTOMER NUMBER: RECORD, ON THE NEXT AVAILABLE CONTENTS LINE OF THE FILE JACKET, 'ADDRESS CHANGE TO CUSTOMER NUMBER'. LINE THROUGH THE OLD ADDRESS ON THE FILE JACKET LABEL AND ENTER ONLY THE 'CUSTOMER NUMBER' AS THE NEW ADDRESS. FILE THIS LETTER IN THE FILE JACKET. WHEN ABOVE CHANGES ARE ONLY TO FEE ADDRESS AND/OR PRACTITIONERS OF RECORD, FILE LETTER IN THE FILE JACKET.

PTO-FMD
TALBOT-1/97

BEST COPY

Transaction History Date 1999-12-27.
Date information retrieved from USPTO Patent Application Information Retrieval (PAIR) system records at www.uspto.gov

UNITED STATES DEPARTMENT OF COMMERCE
Patent and Trademark Office
Address: COMMISSIONER OF PATENTS AND TRADEMARKS
Washington, D.C. 20231

#10

APPLICATION NO.	FILING DATE	FIRST NAMED INVENTOR	ATTORNEY DOCKET NO.
09/052,862	03/31/98	OGDON R	3654-1

022442
SHERIDAN ROSS PC
1560 BROADWAY
SUITE 1200
DENVER CO 80202

LM02/1227

EXAMINER
ROMERO, A

ART UNIT	PAPER NUMBER
2756	9

DATE MAILED: 12/27/99

Please find below and/or attached an Office communication concerning this application or proceeding.

Commissioner of Patents and Trademarks

Office Action Summary	Application No. 09/052,862	Applicant(s) Ogdon et al.
	Examiner Almari Romero	Group Art Unit 2756

☒ Responsive to communication(s) filed on 9/20/99 (IDS).

☐ This action is **FINAL**.

☐ Since this application is in condition for allowance except for formal matters, **prosecution as to the merits is closed** in accordance with the practice under *Ex parte Quayle*, 1935 C.D. 11; 453 O.G. 213.

A shortened statutory period for response to this action is set to expire 3 month(s), or thirty days, whichever is longer, from the mailing date of this communication. Failure to respond within the period for response will cause the application to become abandoned. (35 U.S.C. § 133). Extensions of time may be obtained under the provisions of 37 CFR 1.136(a).

Disposition of Claims

☒ Claim(s) 57-96 is/are pending in the application.

Of the above, claim(s) _____ is/are withdrawn from consideration.

☐ Claim(s) _____ is/are allowed.

☒ Claim(s) 57-96 is/are rejected.

☐ Claim(s) _____ is/are objected to.

☐ Claims _____ are subject to restriction or election requirement.

Application Papers

☒ See the attached Notice of Draftsperson's Patent Drawing Review, PTO-948.

☐ The drawing(s) filed on _____ is/are objected to by the Examiner.

☐ The proposed drawing correction, filed on _____ is ☐approved ☐disapproved.

☐ The specification is objected to by the Examiner.

☐ The oath or declaration is objected to by the Examiner.

Priority under 35 U.S.C. § 119

☐ Acknowledgement is made of a claim for foreign priority under 35 U.S.C. § 119(a)-(d).

☐ All ☐ Some* ☐ None of the CERTIFIED copies of the priority documents have been

☐ received.

☐ received in Application No. (Series Code/Serial Number) _____.

☐ received in this national stage application from the International Bureau (PCT Rule 17.2(a)).

*Certified copies not received: _____.

☒ Acknowledgement is made of a claim for domestic priority under 35 U.S.C. § 119(e).

Attachment(s)

☒ Notice of References Cited, PTO-892

☒ Information Disclosure Statement(s), PTO-1449, Paper No(s). 2,3,4,7,8

☐ Interview Summary, PTO-413

☒ Notice of Draftsperson's Patent Drawing Review, PTO-948

☐ Notice of Informal Patent Application, PTO-152

--- SEE OFFICE ACTION ON THE FOLLOWING PAGES ---

fuboTV Media Inc.
Exhibit 1015
Page 219

DETAILED ACTION

Drawings

1. The drawings are objected to because of PTO-948 form. Correction is required.

2. This application has been filed with informal drawings which are acceptable for examination purposes only. Formal drawings will be required when the application is allowed.

Claim Rejections - 35 USC § 103

3. The following is a quotation of 35 U.S.C. 103(a) which forms the basis for all obviousness rejections set forth in this Office action:

> (a) A patent may not be obtained though the invention is not identically disclosed or described as set forth in section 102 of this title, if the differences between the subject matter sought to be patented and the prior art are such that the subject matter as a whole would have been obvious at the time the invention was made to a person having ordinary skill in the art to which said subject matter pertains. Patentability shall not be negatived by the manner in which the invention was made.

4. Claims 57-96 are rejected under 35 U.S.C. 103(a) as being unpatentable over Goetz et al. (U.S. Patent No. 5,928,330) in view of Eilert et al. (U.S. Patent No. 5,948,065).

5. Regarding claim 57, Goetz et al. (Goetz) discloses the invention substantially as claimed. Goetz discloses; *a network presentation distribution system for presenting a presentation* (On col. 4, lines 37-54: teaches presenting a multimedia presentation via network), *comprising: one or more presentation content supplying nodes of a communications network, said content supplying nodes for providing access, by a first user at a first client node of the communications network, to a collection of data segments of said presentation using said communications network,*

wherein said collection includes first and second subcollections of one or more of said segments (On col. 2, line 59- col. 3, line 3, col. 5, line 67-col. 6, line 30: teaches media streams by type (collection) and subtype (subcollection))*; a presentation controlling node for transmitting to at least said first client node, via the communications network, presentation control information used for identifying said first and second subcollections* (On col. 2, line 59- col. 3, line 3, col. 4, line 67- col. 5, line 9, and col. 5, line 67-col. 6, line 30: teaches identifying media streams by type (collection) and subtype (subcollection) to be transmitted to the client for a multimedia presentation and on Figure 9: teaches a controller between client and server)*; a computational component for determining network performance information of the communications network, wherein said computational component determines said network performance information using network data obtained from network transmissions detected at said first client node* (On col. 2, line 59- col. 3, line 3: teaches determining network performance and transmission rate)*; a first segment selector, activated after said first client node receives said presentation control information, for selecting, using said network performance information, one of said first and second subcollections for transmitting from one of said presentation content supplying nodes to said first client node* (On col. 2, line 59- col. 3, line 3, col. 4, line 67- col. 5, line 9, and col. 5, line 67-col. 6, line 30: teaches selecting subtype from media streams)*; and a presentation component at said first client node for presenting said selected one of said first and second subcollections to the first user* (On col. 2, line 59- col. 3, line 3, col. 4, line 67- col. 5, line 9, col. 5, line 67-col. 6, line 30, and col. 10, line 64- col. 11, line 42: teaches presenting the desired subtype of a media

stream which will be presented to the user using a browser). However, Goetz does not explicitly teach "first and second client nodes and one or more presentation content supplying nodes". Eilert et al. (Eilert) on col. 1, lines 40-42, col. 4, lines 15-17, and col. 11, lines 11-29: teaches a multi system environment (plurality of client nodes and a plurality of servers) for the presentation of multimedia data streams. It would have been obvious to one having ordinary skill in the art at the time the invention was made to incorporate a multi system environment, as taught by Eilert, for the presentation of a desired subtype of media streams, as taught by Goetz, in the network. The motivation to do so would have been to provide one or more clients of different subtype (languages) of a media stream and one or more servers to supply information in order increase the flexibility of the user accessing information for presentation using Internet connections from an office or home.

6. Regarding claim 58, Goetz-Eilert teaches; *determining which of said first and second subcollections to transmit to said first client node, said computational component includes a network analyzer for determining said network performance information using one or more of the following types of said network data* (Goetz on col. 2, line 59- col. 3, line 3, col. 4, line 67- col. 5, line 9, col. 5, line 67-col. 6, line 30, and col. 10, line 64- col. 11, line 42: teaches analyzing network for network performance and determining type and subtypes of media streams)*: (a) a data transmission rate of said communications network at said first client node* (Goetz on col. 2, line 59- col. 3, line 3: teaches transmission rate)*; (b) a fluctuation in bandwidth of said communications network at said first client node* (Eilert on col. 6, lines 3-23 and col. 11, lines 11-

29: teaches selecting best server by determining performance goals that may include the least and fastest bandwidth for the transmission of multimedia data streams); *and © a statistical prediction of a bandwidth of said communications network at saia first client node* (Eilert on col. 6, lines 3-23 and col. 11, lines 11-29: teaches selecting best server by determining performance goals that may include the least and fastest bandwidth for the transmission of multimedia data streams).

7. Regarding claim 59, Goetz-Eilert teaches; *wherein said first segment selector is activated in response to said first client node receiving said presentation control information, and is activated without an intervening manual input from the first user for requesting one of said first and second subcollections* (Goetz on col. 2, line 59- col. 3, line 3, col. 4, line 67- col. 5, line 9, and col. 5, line 67-col. 6, line 30: teaches selecting media streams by type (collection) and subtype (subcollection) to be transmitted to the client for a multimedia presentation).

8. Regarding claim 60, Goetz-Eilert teaches; *wherein a bandwidth of presentation transmissions on the communications network to the first client node varies sufficiently to affect the presenting of the presentation, and the varying bandwidth is substantially uncontrollable from said first client node, and said presentation content supplying nodes* (Eilert on col. 6, lines 3-23 and col. 11, lines 11-29: teaches selecting best server by determining performance goals that may include the least and fastest bandwidth for the transmission of multimedia data streams).

9. Regarding claim 61, Goetz-Eilert teaches; *wherein at least one of said first and second subcollections is accessible from first and second of said content supplying nodes via first and second routes* (Goetz on col. 2, line 59- col. 3, line 3, col. 4, line 67- col. 5, line 9, and col. 5, line

67-col. 6, line 30: teaches subtypes of media streams) and (Eilert on col. 4, lines 15-17 and col. 4, line 52-col. 5, line 21: teaches transmitting multimedia data streams to a first and second servers of a group); *wherein: (a) said first route includes said first content supplying node and not said second content supplying node* (Goetz on col. 2, line 59- col. 3, line 3, col. 4, line 67- col. 5, line 9, and col. 5, line 67-col. 6, line 30: teaches subtypes of media streams and transmitting selected subtype to the client for presentation) and (Eilert on col. 4, lines 15-17 and col. 4, line 52-col. 5, line 21: teaches transmitting multimedia data streams to a first and second servers of a group); *and (b) said second route includes said second content supplying node and not said first content supplying node* (Eilert on col. 4, lines 15-17 and col. 4, line 52-col. 5, line 21: teaches transmitting multimedia data streams to a first and second servers of a group).

10. Regarding claim 62, Goetz-Eilert teaches; *wherein said first subcollection includes video with motion, and said second subcollection includes video with one of reduced motion and no motion, and said first subcollection is presented to the first user at said first client node simultaneously with said second subcollection being presented to a second user at a second client node routes* (Goetz on col. 1, lines 27-29, col. 2, line 59- col. 3, line 3, col. 4, line 67- col. 5, line 9, and col. 5, line 67-col. 6, line 30: teaches media streams of video and audio and determining type and subtype for presentation to the client).

11. Regarding claim 63, Goetz-Eilert teaches; *wherein the communications network includes a portion of one of: the Internet, and a network using TCP/IP* (Goetz on col. 10, line 64- col. 11, line 42: teaches Internet using TCP/IP) *for communicating between at least one of: (a) one of*

said content supplying nodes and said first client node (Eilert on col. 4, lines 15-17 and col. 4, line 52-col. 5, line 21: teaches a multi system environment); *(b) said presentation controlling node and said first client node; © one of the content supplying nodes and said presentation controlling node* (Goetz in Figure 9: teaches a controller between client and server) and (Eilert on col. 7, lines 15-24: teaches a controller).

12. Regarding claim 64, Goetz-Eilert teaches; *wherein said first client node includes said first segment selector and a first presentation display component for displaying to the first user at said first client node, a first selection of one of said first and second subcollections, made by said first segment selector* (Goetz on col. 1, lines 27-29, col. 2, line 59- col. 3, line 3, col. 4, line 67- col. 5, line 9, col. 5, line 67-col. 6, line 30, and col. 10, line 64- col. 11, line 42: teaches selecting types and subtypes of media streams to be presented to the client using a browser).

13. Regarding claim 65, Goetz-Eilert teaches; *wherein said first subcollection includes first video portion, and said second subcollection includes different second video portion that corresponds in content with said first video portion, and wherein said first and second video portions have substantially different expected data transmission rates for being transmitted to said first client node, and wherein said first segment selector uses said different expected data transmission rates in selecting one of said first and second subcollections* (Goetz on col 1, lines 27-29, col. 2, line 59- col. 3, line 3, col. 4, lines 37-54, col. 4, line 67- col. 5, line 9, col. 5, line 67-col. 6, line 30, col. 10, line 64- col. 11, line 42, and col. 13, lines 14-24: teaches different types

and subtypes of media streams (audio and video) and selecting one of the subtypes and transmitted to the client at a pre-determined transmission rate).

14. Regarding claim 66, Goetz-Eilert teaches; *wherein an audio portion for said first subcollection is transmitted to said first client node separately from said first subcollection via a phone bridge* (Goetz on col 1, lines 27-29, col. 2, line 59- col. 3, line 3, col. 4, lines 37-54, col. 4, line 67- col. 5, line 9, col. 5, line 67-col. 6, line 30, col. 10, line 64- col. 11, line 42, and col. 13, lines 14-24: teaches different types and subtypes of media streams (audio and video)).

15. Regarding claim 67, Goetz-Eilert teaches; *wherein said first segment selector is resident on said first client node and a second segment selector, activated in response to a second client node receiving said presentation control information, is resident on said second client node, wherein said first and second segment selectors each select, without user selection input, one of said first and second subcollections for simultaneous presenting of a same corresponding portion of the presentation* (Goetz on col 1, lines 27-29, col. 2, line 59- col. 3, line 3, col. 4, lines 37-54, col. 4, line 67- col. 5, line 9, col. 5, line 67-col. 6, line 30, col. 10, line 64- col. 11, line 42, and col. 13, lines 14-24: teaches selecting means of a type and subtypes of a media steam to be presented to the client) and (Eilert on col. 4, lines 15-17 and col. 4, line 52-col. 5, line 21: teaches a multi system environment of one or more client nodes) .

16. Regarding claim 68, Goetz-Eilert teaches; *further including a network interface component, residing on said first client node, for receiving said presentation control information and transmitting a request for a subcollection of said collection of data segments to one of said*

content supplying nodes, wherein said network interface component includes a network browser for communicating with said communications network (Goetz on col. 10, line 64- col. 11, line 42: teaches browser in client system and server for the transmission of data steams to be presented to the client).

17. Regarding claim 69, Goetz-Eilert teaches; *further including a content manager for distributing, via said communications network, at least a video portion of said first and second different subcollections of said presentation to said content supplying nodes prior to a commencement of a performance of said presentation, wherein during said performance of said presentation* (Goetz on col 1, lines 27-29, col. 2, line 59- col. 3, line 3, col. 4, lines 37-54, col. 4, line 67- col. 5, line 9, col. 5, line 67-col. 6, line 30, col. 10, line 64- col. 11, line 42, and col. 13, lines 14-24: teaches determining performance of network prior to the transmission of media streams for presentation) and (Eilert on col. 4, lines 15-17, col. 4, line 52- col. 5, line 21, col. 6, lines 3-23: teaches performance goals in a multi system environment), *said first subcollection is presented at said first client node when received from said first content supplying node, and said second subcollection is simultaneously presented at a second client node when received from said second content supplying node after said second client node receives said presentation controlling information* (Goetz on col 1, lines 27-29, col. 2, line 59- col. 3, line 3, col. 4, lines 37-54, col. 4, line 67- col. 5, line 9, col. 5, line 67-col. 6, line 30, col. 10, line 64- col. 11, line 42, and col. 13, lines 14-24: teaches type and subtype of media streams to be presented to the client)

and (Eilert on col. 4, lines 15-17, col. 4, line 52- col. 5, line 21, col. 6, lines 3-23: teaches a multi system environment).

18. Regarding claim 70, Goetz-Eilert teaches; *wherein there are first and second versions of said presentation performed synchronously, respectively, at said first client node and a second client node receiving said presentation control information, wherein there is a correspondence in content between at least a majority of segments in said first version with segments of said second version, and wherein said first and second versions have their corresponding audio portions in different natural languages* (Goetz on col 1, lines 27-29, col. 2, line 59- col. 3, line 3, col. 4, lines 37-54, col. 4, line 67- col. 5, line 9, col. 5, line 67-col. 6, line 30, col. 10, line 64- col. 11, line 42, and col. 13, lines 14-24: teaches type and subtype of synchronous audio streams includes multiple of different natural languages to be selected and presented to the client).

19. Regarding claim 71, Goetz-Eilert teaches; *further including a leader node that is accessed by a leader for controlling a performance of said presentation, wherein the leader directs a pace and content of the presentation performance provided to said client nodes via said presentation controlling network node that synchronizes a performance of said presentation on said first client node with a performance of said presentation on a second client node so that a particular one or more of said segments are presented on said first client node synchronously with an alternative one or more segments being output by one of said content supplying nodes to said second client node, wherein said alternative one or more segments correspond in content to said particular one or more segments* (Goetz on col 1, lines 27-29, col. 2, line 59- col. 3, line 3,

col. 4, lines 37-54, col. 4, line 67- col. 5, line 9, col. 5, line 67-col. 6, line 30, col. 10, line 64- col. 11, line 42, and col. 13, lines 14-24: teaches controlling a performance of presentation by synchronizing media streams to be presented to the client) and (Eilert on col. 4, lines 15-17, col. 4, line 52- col. 5, line 21, col. 6, lines 3-23: teaches performance goals in a multi system environment for a smooth multimedia presentation).

20. Regarding claim 72, Goetz-Eilert teaches; *A network presentation distribution system for presenting a presentation, comprising: a first and second presentation content supplying nodes of a communications network, said first and second content supplying nodes for providing access to one or more collections of data segments of said presentation using said communications network* (Goetz on col 1, lines 27-29, col. 2, line 59- col. 3, line 3, col. 4, lines 37-54, col. 4, line 67- col. 5, line 9, col. 5, line 67-col. 6, line 30, col. 10, line 64- col. 11, line 42, and col. 13, lines 14-24: teaches type and subtype of media streams to be presented to the client) and (Eilert on col. 4, lines 15-17, col. 4, line 52- col. 5, line 21, col. 6, lines 3-23: teaches a multi system environment for transmission of multimedia data streams); *a presentation controlling node for transmitting to at least a first client node, presentation control information used for identifying a first subcollection of said segments for presentation to a user at said first client node* (Goetz on col 1, lines 27-29, col. 2, line 59- col. 3, line 3, col. 4, lines 37-54, col. 4, line 67- col. 5, line 9, col. 5, line 67-col. 6, line 30, col. 10, line 64- col. 11, line 42, and col. 13, lines 14-24: teaches type and subtype of media streams to be presented to the client and on Figure 9: teaches a controller); *and a content node selector, activated after said first client node receives*

said presentation control information, said content node selector for selecting one of said first and second content supplying nodes for transmitting one of (Eilert on col. 4, lines 15-17, col. 4, line 52- col. 5, line 21, col. 6, lines 3-23, and col. 11, lines 11-29: selecting best server for the transmission of multimedia data streams)*: (a) said first subcollection to said first client node using said communications network; and (b) an alternative subcollection of one or more of said segments predetermined as a replacement for said first subcollection for presenting at said first node* (Goetz on col 1, lines 27-29, col. 2, line 59- col. 3, line 3, col. 4, lines 37-54, col. 4, line 67- col. 5, line 9, col. 5, line 67-col. 6, line 30, col. 10, line 64- col. 11, line 42, and col. 13, lines 14-24: teaches type and subtype of media streams to be presented to the client)*; wherein said first client node transmits a presentation request to a selected one of said first and second content supplying nodes, said presentation request including at least one of* (Eilert on col. 4, lines 15-17, col. 4, line 52- col. 5, line 21, col. 6, lines 3-23, and col. 11, lines 11-29: teaches selecting best server for the transmission of multimedia data streams)*: (a) identification of a version of said presentation, said version for a predetermined group of presentation audience members* (Goetz on col 1, lines 27-29, col. 2, line 59- col. 3, line 3, col. 4, lines 37-54, col. 4, line 67- col. 5, line 9, col. 5, line 67-col. 6, line 30, col. 10, line 64- col. 11, line 42, and col. 13, lines 14-24: teaches determining type and subtype of language in media streams to be presented to the client) and (Eilert on col. 4, lines 15-17, col. 4, line 52- col. 5, line 21, col. 6, lines 3-23, and col. 11, lines 11-29: teaches selecting best server from a group for the transmission of multimedia data streams)*, (b) an identification of one of said first and second subcollections identified in a*

predetermined script for said presentation; and © information for identifying an alternative segment determined by a leader of a performance of said presentation, wherein said alternative segment is not identified in said script (Goetz on col 1, lines 27-29, col. 2, line 59- col. 3, line 3, col. 4, lines 37-54, col. 4, line 67- col. 5, line 9, col. 5, line 67-col. 6, line 30, col. 10, line 64- col. 11, line 42, and col. 13, lines 14-24: teaches interaction between browser and server) and (Eilert on col. 4, lines 15-17, col. 4, line 52- col. 5, line 21, col. 6, lines 3-23, and col. 11, lines 11-29: teaches selecting best server from a group for the transmission of multimedia data streams for a multimedia presentation to the client).

21. Regarding claim 73, Goetz-Eilert teaches; *wherein said content node selector changes* (Goetz on col. 10, lines 7-14: teaches modifying media blocks (segments or portions)) *from selecting said first content supplying node to selecting said second content supplying node according to a value dependent on a measurement related to a previous data transmission rate between said first client node and at least one of said first and second content supplying node, wherein said value is expected to be indicative of a current data transmission rate between said first client node, and at least one of said first and second content supplying nodes* (Goetz on col 1, lines 27-29, col. 2, line 59- col. 3, line 3, col. 4, lines 37-54, col. 4, line 67- col. 5, line 9, col. 5, line 67-col. 6, line 30, col. 10, line 64- col. 11, line 42, and col. 13, lines 14-24: teaches determining transmission rate and performance for the transmission of media streams) and (Eilert on col. 4, lines 15-17, col. 4, line 52- col. 5, line 21, col. 6, lines 3-23, and col. 11, lines 11-29: teaches selecting best server from a group for the transmission of multimedia data streams).

22. Regarding claim 74, Goetz-Eilert teaches; *A network presentation distribution system for presenting a presentation, comprising: one or more content supplying network nodes able to provide a plurality of segments to a first of a plurality of network client nodes, via a communications network, wherein each of said segments provides a portion of a particular presentation* (Goetz on col 1, lines 27-29, col. 2, line 59- col. 3, line 3, col. 4, lines 37-54, col. 4, line 67- col. 5, line 9, col. 5, line 67-col. 6, line 30, col. 10, line 64- col. 11, line 42, and col. 13, lines 14-24: teaches interaction between browser in client and server) and (Eilert on col. 4, lines 15-17, col. 4, line 52- col. 5, line 21, col. 6, lines 3-23, and col. 11, lines 11-29: teaches a multi system environment for the transmission of multimedia data streams for a multimedia presentation to the client); *a presentation controlling network node for transmitting presentation control information providing identities of segments in a collection of said segments when the presentation is performed at said first client node* (Goetz on col 1, lines 27-29, col. 2, line 59- col. 3, line 3, col. 4, lines 37-54, col. 4, line 67- col. 5, line 9, col. 5, line 67-col. 6, line 30, col. 10, line 64- col. 11, line 42, and col. 13, lines 14-24: teaches video and audio presentation to the client) and (Eilert on col. 4, lines 15-17, col. 4, line 52- col. 5, line 21, col. 6, lines 3-23, and col. 11, lines 11-29: teaches multimedia data streams for a multimedia presentation to the client); *a presentation network component at said first client node, wherein, after receiving said presentation control information, said presentation network component transmits segment selection information, obtained using said presentation control information, to a first of said content supplying nodes for obtaining the collection at said first client node* (Goetz on col 1,

lines 27-29, col. 2, line 59- col. 3, line 3, col. 4, lines 37-54, col. 4, line 67- col. 5, line 9, col. 5, line 67-col. 6, line 30, col. 10, line 64- col. 11, line 42, and col. 13, lines 14-24: teaches presenting selected type of media streams to the client) and (Eilert on col. 4, lines 15-17, col. 4, line 52- col. 5, line 21, col. 6, lines 3-23, and col. 11, lines 11-29: teaches multimedia data streams for presentation); *a segment selector that uses one of: (a) the presentation control information, and (b) the segment selection information for identifying a first collection to transmit from the first content supplying node to the first client node* (Goetz on col 1, lines 27-29, col. 2, line 59- col. 3, line 3, col. 4, lines 37-54, col. 4, line 67- col. 5, line 9, col. 5, line 67-col. 6, line 30, col. 10, line 64- col. 11, line 42, and col. 13, lines 14-24: teaches selection of a desired type of media streams for presentation to the client) and (Eilert on col. 4, lines 15-17, col. 4, line 52- col. 5, line 21, col. 6, lines 3-23, and col. 11, lines 11-29: teaches multimedia data streams for a multimedia presentation to the client); *wherein said presentation controlling network node synchronizes a performance of said presentation on said first client node with a performance of said presentation on a second client node so that a particular one or more of said segments are presented on said first client node synchronously with an alternative one or more segments being output by one of said content supplying nodes to said second client node, wherein said alternative one or more segments correspond in content to said particular one or more segments* (Goetz on col 1, lines 27-29, col. 2, line 59- col. 3, line 3, col. 4, lines 37-54, col. 4, line 67- col. 5, line 9, col. 5, line 67-col. 6, line 30, col. 10, line 64- col. 11, line 42, and col. 13, lines 14-24: teaches controlling a performance of presentation by synchronizing media streams to be presented

to the client) and (Eilert on col. 4, lines 15-17, col. 4, line 52- col. 5, line 21, col. 6, lines 3-23, and col. 11, lines 11-29: teaches determining performance goals for the transmission of multimedia data streams to display a multimedia presentation to the client).

23. Regarding claim 75, Goetz-Eilert teaches; *wherein said selection information depends on a data transmission characteristic to the first client node from one of the content supplying nodes; wherein said data transmission characteristic is dependent on one of a network data transmission rate and a measurement of network data transmission errors; and wherein said data transmission characteristic is expected to be indicative of a current transmission rate to the first client node from the one content supplying node* (Goetz on col 1, lines 27-29, col. 2, line 59- col. 3, line 3, col. 4, lines 37-54, col. 4, line 67- col. 5, line 9, col. 5, line 67-col. 6, line 30, col. 10, line 64- col. 11, line 42, and col. 13, lines 14-24: teaches determining transmission rate and performance for the transmission of media streams) and (Eilert on col. 4, lines 15-17, col. 4, line 52- col. 5, line 21, col. 6, lines 3-23, and col. 11, lines 11-29: teaches selecting best server from a group for the transmission of multimedia data streams).

24. Regarding claims 76-96, are substantially the same as claims 57-75 and are thus rejected for reasons similar to those in rejecting claims 57-75.

Conclusion

25. Any inquiry concerning this communication or earlier communications from the examiner should be directed to Almari Romero whose telephone number is (703) 305-0749. The examiner can normally be reached on Mondays-Fridays from 7:30 A.M. to 4:30 P.M.

If attempts to reach the examiner by telephone are unsuccessful, the examiner's supervisor Frank Asta, can be reached on (703) 305-3817. The fax phone number for this Group is (703) 308-9731.

Any inquiry of a general nature or relating to the status of this application or proceeding should be directed to the Group receptionist whose telephone number is (703) 305-3900.

MARK H. RINEHART
PRIMARY EXAMINER

ar

Notice of References Cited

Application No.	Applicant(s)		
09/052,862	Ogdon et al.		
Examiner		Group Art Unit	Page 1 of 1
Almari Romero		2756	

U.S. PATENT DOCUMENTS

	DOCUMENT NO.	DATE	NAME	CLASS	SUBCLASS
A	5,774,698	06/30/98	Olnowich	370	366
B	5,864,682	01/26/99	Porter et al.	709	231
C	5,928,330	07/27/99	Goetz et al.	709	231
D	5,948,065	09/07/99	Eilert et al.	709	226
E	5,956,729	09/21/99	Goetz et al.	707	104
F					
G					
H					
I					
J					
K					
L					
M					

FOREIGN PATENT DOCUMENTS

	DOCUMENT NO.	DATE	COUNTRY	NAME	CLASS	SUBCLASS
N						
O						
P						
Q						
R						
S						
T						

NON-PATENT DOCUMENTS

	DOCUMENT (Including Author, Title, Source, and Pertinent Pages)	DATE
U		
V		
W		
X		

fuboTV Media Inc.
Exhibit 1015
Page 236

Attachment 09/052862

The drawings submitted with this application were declared informal by the applicant. Accordingly, they have not been reviewed by a draftsperson at this time. When formal drawings are submitted, the draftsperson will perform a review.

Direct any inquiries concerning drawing review to the Drawing Review Branch (703) 305-8404.

Substitute PTO-948

~~2756~~
2757
4/10c
8. Bond
4/17/00

PATENT APPLICATION

IN THE UNITED STATES PATENT AND TRADEMARK OFFICE

In Re the Application of:	)	Group Art Unit: 2756
Ogdon et al.	)	Examiner: Almari Romero
Serial No.: 09/052,862	)	AMENDMENT AND RESPONSE
Filed: March 31, 1998	)	
Atty. File No.: 3654-1	)	
For: "METHOD AND SYSTEM FOR PROVIDING A PRESENTATION ON A NETWORK"	)	

OIPE JC63 MAR 2 8 2000 PATENT & TRADEMARK OFFICE

CERTIFICATE OF MAILING

I HEREBY CERTIFY THAT THIS CORRESPONDENCE IS BEING DEPOSITED WITH THE UNITED STATES POSTAL SERVICE AS FIRST CLASS MAIL IN AN ENVELOPE ADDRESSED TO ASSISTANT COMMISSIONER FOR PATENTS, WASHINGTON, DC 20231 ON March 23, 2000.

SHERIDAN ROSS P.C.

BY Chasity C. Rossum
Chasity C. Rossum

Assistant Commissioner
for Patents
Washington, D.C. 20231

Dear Sir:

Applicants submit this Amendment and Response to address the Office Action having a mailing date of December 27, 1999. Although Applicants do not believe that any fees are due at this time in relation to the above-identified patent application, please charge any such fees to Deposit Account No. 19-1970.

Please amend the above-identified patent application as follows:

RECEIVED
APR -3 2000
TC 2700 MAIL ROOM

IN THE CLAIMS:

Claim 76, line 11, please replace "identifying" with --first identifying--.

Claim 86, line 16, please replace "[and second] client node[s for] with" with --client made with--.

Claim 86, lines 17-18, please replace "[to the client nodes], wherein [at least]" with --, wherein--.

Claim 92, line 18, immediately after "and" please start a new paragraph.

REMARKS

The present invention is a system for distributing a presentation on a network, such as the Internet, wherein audience members for the presentation are synchronously provided with identical (and/or content corresponding) portions of the presentation. For example, different audience members may simultaneously be presented with different versions of the presentation, wherein the audience members receive synchronized versions of the presentation via the network. In particular, the present invention synchronizes the presentation to the audience members so that all audience members progress through the presentation substantially identically. Additionally, this synchronization of the presentation between audience member network nodes is maintained even though there may be dramatic network bandwidth fluctuations that are uncontrollable. That is, such presentation synchronization is maintained despite there being network bandwidth fluctuations not only at a single audience member network (client) node, but also between audience member network nodes. Moreover, the present invention further provides for the directing of a presentation performance by one or more presentation leaders for determining, in real-time, a content of the presentation. To provide the above functionality, the present invention includes: (a) one or more presentation content supplying nodes for supplying portions of the presentation to audience members (at client nodes), (b) a presentation controlling the node

fuboTV Media Inc.
Exhibit 1015
Page 239

for controlling the distribution of presentation content from the content supplying nodes, (c) various components for determining network performance throughout the presentation at the client nodes, and (d) presentation segment selector components for selecting, for each audience member, a particular version of a soon to be presented portion of the presentation and for selecting a particular one of the content supplying nodes for transmitting the particular presentation version to the audience member, wherein the selections use evaluations of network performance during the presentation at the audience member's network node.

The Examiner has rejected Claims 57-96 under 35 U.S.C. §103(a) as being unpatentable over Goetz et al. in view of Eilert et al. These rejections are respectfully traversed. Goetz discloses a system, device and method for streaming a multimedia file (having a very particular file format) to a single user from a single server. There is no teaching or suggestion of synchronizing a performance of a presentation among multiple audience members dispersed at different (client) nodes on a communications network. Moreover, Goetz has no distributed network architecture as the present invention teaches for synchronously transmitting different versions of a presentation to a plurality of client nodes from various network sources to thereby mitigate network bandwidth fluctuations. Eilert, on the other hand, discloses a processor resource management system for managing resource allocations among a plurality of computational systems, wherein the primary goal is to constrain or limit the amount of server resources expended on real-time data streaming applications so that other non-real-time applications may receive appropriate computational resources. For example, a server's resources expended on such real-time streaming

fuboTV Media Inc.
Exhibit 1015
Page 240

applications "is not to exceed a limit chosen for a group of one or more real-time applications" (Eilert, column 2, lines 12-13). That is, when delivering real-time data to clients served by the multi-system, the Eilert management system is directed to assuring that "processor resource remains available [within the multi-system] for at least one non-real-time application of the multi-system environment" (column 2, lines 15-17). Since Eilert is directed to managing and/or conserving processor resources of a multi-system that provides information to users (i.e., clients), the coordination and distribution of applications between the processors of the multi-system are for internally balancing the real-time application loads between the servers of multi-system. Moreover, there is no teaching or suggestion of synchronizing a performance of a presentation among multiple audience member client network nodes, since the processing at client nodes is not managed by the Eilert resource management system. Moreover, Eilert does not teach or suggest a distributed network architecture, wherein, for example, control information is provided to each such client node for identifying various versions of a presentation in order that an appropriate presentation version can be presented at the client node according to a current performance of the network at the client node. In particular, Eilert's processor resource management system manages processor resources of a plurality of application processing computers (servers) that, in turn, interact with clients (Eilert, column 4, lines 38-41). Eilert does not, however, manage presentations at client nodes according to measurements related to network bandwidth. Moreover, Eilert does not teach or suggest any action being performed to enhance a performance of an ongoing presentation. For example, there is no disclosure of changing servers when providing a real-time data stream.

fuboTV Media Inc.
Exhibit 1015
Page 241

It is respectfully submitted that the combination of Goetz and Eilert does not yield the present invention. By incorporating the single server system disclosed in Goetz with the processor resource management system of Eilert, the resulting combination is a system having a plurality of the Goetz servers that have their processor resources managed to limit real-time application utilization. Moreover, there would still be no teaching or suggestion in such a Goetz-Eilert combination system of a client requesting a change in presentation content providing servers. Accordingly, it is believed that the combination of the cited references does not suggest and will not yield the present invention as recited in the presently pending claims. Thus, it is believed that the presently pending claims are allowable. However, to be more specific regarding the Examiner's claim rejections, detailed remarks are provided hereinbelow for overcoming the Examiner's rejections of specific claims.

Regarding the Examiner's rejection of Claim 57, the Examiner states that Goetz teaches the following portion of Claim 57:

> **"a presentation controlling node for transmitting to at least said first client node, via the communications network, presentation control information used for identifying said first and second subcollections".**

In particular, for the presentation controlling node, the Examiner cites Figure 9 of Goetz as teaching a controller between the client 910 and the server 920. However, the block 930 to which it is believed the Examiner is referring, is a communications network for transmitting communications between the client 910 and the server 920 (Goetz, column 10, lines 37-48). Moreover, the only other blocks (931 and 932) between the client 910 and the server 920 are illustrative of control information and data "to be exchanged between the client 910 and the sever 920" (column 10, lines 47 and 48). Accordingly, Figure 9 does not

fuboTV Media Inc.
Exhibit 1015
Page 242

teach or suggest a presentation controlling node as recited in Claim 57. Further, the Examiner cites Goetz, column 2, lines 59-column 3, line 3; column 4, lines 67-column 5, line 9; and column 5, lines 67-column 6, line 30 for teaching selecting subtypes from media streams as evidence of the following portion of Claim 57:

> **"a first segment selector, activated after said first client node receives said presentation control information, for selecting, using said network performance information, one of said first and second subcollections for transmitting from one of said presentation content supplying nodes to said first client node".**

However, since there is no presentation controlling node in Goetz as required by the present claim, it is not possible for the "first segment selector" to be activated after the client node receives presentation control information from the presentation controlling node.

Moreover, the Examiner states that Goetz does not explicitly teach "first and second client nodes and one or more presentation content supplying nodes." However, there is no such clause in Claim 57. Thus, the Examiner's statement is not understood in the context of claim 57. Accordingly, it is believed that Claim 57 is patentable.

Regarding the Examiner's rejection of Claim 58, this claim is believed patentable due to its dependence on Claim 57. However, the remarks by the Examiner warrant clarification. The Examiner asserts that Eilert teaches the following portion of the present claim: "a fluctuation in bandwidth of said communications network at said first client node", and the Examiner cites column 6, lines 3-23, and column 11, lines 11-29. The Examiner's assertion is respectfully traversed. Regarding Eilert column 6, lines 3-23, this passage is directed to establishing goal classes for the computers (e.g., servers) of the multi-system environment,

fuboTV Media Inc.
Exhibit 1015
Page 243

wherein performance goals are associated with both real-time and non-real time applications executed on the servers. However, there is no mention of using or determining a fluctuation in bandwidth. Additionally, there is also no mention of using or determining a fluctuation in bandwidth of a communications network in Eilert, column 11, lines 11-29.

The Examiner further states that Eilert teaches the following portion of Claim 58: "a statistical prediction of a bandwidth of said communications network at said first client node" in Eilert: (a) column 6, lines 3-23, and (b) column 11, lines 11-29. The Examiner states that these Eilert passages teach "selecting [the] best server by determining performance goals that may include the least and fastest bandwidth for the transmission of multimedia data streams". The Examiner's statement is respectfully traversed. Presumably regarding "the least and fastest bandwidth" which the Examiner states is shown in the cited passages, the Examiner is referring to the "processor consumption limit values, the processor consumption maximum values, and the goals are multi-system-wide values and goals" (Eilert, column 6, lines 14-16). However, none of these values and goals are indicated as being a statistical prediction of bandwidth. Moreover, neither of the above Eilert passages (a) nor (b) cited by the Examiner are referring to network (i.e., client) nodes that are <u>receiving</u> a presentation. The passages cited by the Examiner are referring to the computers of the multi-system environment where applications are performed remotely from workstation clients, e.g., clients 114 in Eilert. Thus, there is no teaching or suggestion regarding a statistical prediction of a bandwidth at a client node. As an aside, note that the Eilert selection of a "best system" is illustrated in the pseudo code of column 12, lines 5-25, and there is no disclosure there of using a statistical prediction of a network bandwidth.

fuboTV Media Inc.
Exhibit 1015
Page 244

Thus, the selection of the "best system" does not appear to include statistically predicting network bandwidth.

Regarding Claim 59, the Examiner cites Goetz, column 2, line 59-column 3, line 3; column 4, line 67-column 5, line 9; column 5, line 57-column 6, line 30 in rejecting this claim. The rejection is respectfully traversed. The present claim recites a first segment selector that is activated in response to a first client node receiving the presentation control information (from a presentation controlling node), and the first segment selector is activated without an intervening manual input for requesting one of a first subcollection and a second subcollection. In the passages of Goetz that the Examiner cites in rejecting the present claim, different languages may be selected for a presentation, but the only technique for such selection is manually by a user. The Goetz passages also mention selecting audio types, but there is no teaching or suggestion in these passages of selecting audio types in response to the client node receiving any presentation control information. Moreover, such presentation control information in the present claim is provided by a presentation controlling node, and as discussed hereinabove, such a node is not provided in Goetz. Accordingly, it is believed that the present claim is patentable both because the Goetz reference does not disclose the claimed device, and because of the present claim's dependence on patentable Claim 57.

Regarding the Examiner's rejection of Claim 60, the Examiner cites Eilert column 6, lines 3-23 and column 11, lines 11-29, wherein the Examiner states that these passages teach "selecting [the] best server by determining performance goals that may include the least and fastest bandwidth for the transmission of multimedia data streams". This rejection is respectfully traversed for substantially the same reasons given above in discussing Claim

fuboTV Media Inc.
Exhibit 1015
Page 245

58. In particular, Eilert does not address problems of uncontrolled bandwidth variations on a communications network. Eilert is directed to controlling the allocation of server resources for a plurality of servers regardless of whether or not there are network bandwidth fluctuations sufficient to affect an ongoing presentation at a client node. Accordingly, the present claim is believed to be patentable both because of the reasoning provided immediately hereinabove, and because the present claim is dependent upon patentable Claim 57.

Regarding Claim 61, the Examiner's rejection is respectfully traversed. The Examiner cites Eilert, column 4, lines 15-17 and column 4, lines 52-column 5, line 21 as supposedly teaching "transmitting multimedia data streams to a first and second servers of a group". However, neither of these Eilert passages teach transmitting to servers. (The servers in Eilert being identified as, e.g., 100-A, 100-B, 100-C; column 4, lines 15-17). Moreover, the present claim recites "first and second subcollections... accessible from first and second of said client supplying nodes". Thus, since the first and second content supplying nodes of the present invention correspond to network server nodes, it is unclear what the Examiner is indicating that is being taught in the cited Eilert passages. Moreover, neither Eilert passage cited by the Examiner teaches or suggests the first and second network routes of the present claim, wherein the routes are sufficiently different so that the "first route includes said first content supplying node and not said second content supplying node", and, "said second route includes said second content supplying node and not said first content supplying node." Accordingly, it is believed that the present claim is patentable both: (a)

fuboTV Media Inc.
Exhibit 1015
Page 246

due to the differences between the cited Eilert passages and the present claim, and (b) due to the fact that the present Claim 61 is dependent upon patentable Claim 57.

Regarding Claim 62, the Examiner's rejection is respectfully traversed. The Examiner cites passages from Goetz for teaching "media streams of video and audio and determining type and subtype for presentation to the client". However, Goetz does not disclose or suggest having two different subcollections of a presentation and simultaneously synchronizing presenting each subcollection to a different client node. As discussed hereinabove, Goetz's invention is a multimedia file format and system for performing multimedia streaming between a server and a single client node. There is no suggestion or disclosure for coordinating the presenting of versions of a presentation at multiple client nodes. Accordingly, the present claim is believed patentable both: (a) due to the distinctions between Goetz and the present claim, and (b) due to the fact that the present claim is dependent upon patentable Claim 57.

Regarding Claim 63, this claim is believed to be patentable due to its dependence upon patentable Claim 57. Additionally, it is noted here that the reasoning provided by the Examiner in rejecting item (c) of the present claim is incorrect in that Figure 9 of Goetz does not teach a controller between client nodes and server nodes.

Regarding Claim 64, this claim is believed patentable due to its dependence upon patentable Claim 57.

Regarding Claim 65, this claim is believed patentable due to its dependence upon patentable Claim 57.

fuboTV Media Inc.
Exhibit 1015
Page 247

Regarding Claim 66, the Examiner's rejection is respectfully traversed. In particular, Goetz does not disclose using a phone bridge for transmitting an audio portion of a subcollection of data segments for the presentation separately from the transmission of the subcollection. Note that it is commonly understood in the art that a phone bridge is a distinct portion of a telephony network used in the present invention for audio communication wherein telephony audio quality standards are applied thereto thus assuring at least a minimal level of audio quality regardless of the bandwidth of the communications network upon which the video portion of the presentation is provided to audience members. Accordingly, it is believed that Claim 66 is patentable both: (a) due to the difference between the cited references and the claimed invention, and (b) due to the present claim's dependence on patentable Claim 57.

Regarding Claim 67, the Examiner's rejection is respectfully traversed. Neither Goetz nor Eilert, singly or in combination, disclose or suggest a first segment selector residing on a first client node, and a second segment selector residing on a second client node, wherein each of the segment selectors selects presentation segments without user selection input for simultaneously presenting a same corresponding portion of the presentation. In particular, neither Goetz or Eilert teaches coordinating network presentations at multiple client nodes. Accordingly, it is believed that the present claim is patentable since the cited references fail to disclose or suggest the claimed invention, and additionally since the present claim is dependent upon patentable Claim 57.

Regarding Claim 68, the Examiner's rejection is respectfully traversed. The present claim recites a network interface component for receiving presentation control information

fuboTV Media Inc.
Exhibit 1015
Page 248

(transmitted from a presentation controlling node), and also wherein the network interface transmits requests for presentation segments to content supplying nodes. Accordingly, the present claim recites that the network interface receives presentation control information from one node (i.e., the presentation controlling node), and transmits a request to another node (i.e., a content supplying node). The Examiner cites a lengthy collection of passages from Goetz. However, as discussed hereinabove, there is no such configuration disclosed or suggested in Goetz. For instance, there is no presentation controlling network node different from a content supplying node. Accordingly, it is believed the present claim is patentable both: (a) the distinctions between the cited reference and the present claim, and (b) because the present claim is dependent on patentable Claim 57.

Regarding Claim 69, the Examiner's rejection is respectfully traversed. There is no teaching or suggestion in Goetz of a content manager that supplies first and second different subcollections of the presentation to content supplying nodes (e.g., server nodes) prior to a commencement of a performance of the presentation wherein the different subcollections are subsequently presented to first and second client nodes simultaneously. It is believed that the Examiner has misunderstood the present claim in that the Examiner's rejection cites Goetz for teaching "determining performance of network prior to the transmission of media streams for presentation". However, the present claim is not directed to determining a performance of the network. Additionally, there is no teaching or suggestion in Goetz or Eilert for simultaneously presenting different portions of a presentation at different network client nodes. Accordingly, it is believed the present claim is patentable due to: (a) the

fuboTV Media Inc.
Exhibit 1015
Page 249

distinctions between the cited references and the present claim, and (b) the present claim being dependent upon patentable Claim 57.

Regarding Claim 70, the Examiner's rejection is respectfully traversed. The cited Goetz references for rejecting the present claim do not disclose or suggest synchronously providing different versions of a presentation to first and second client nodes. In particular, there is no discussion in Goetz regarding synchronizing such presentations at a plurality of client nodes as the present claim recites. For example, in one embodiment of the present invention, a leader of a presentation electronically provides the presentation synchronously to a plurality of audience members, each at their own network client node for electronically receiving the presentation. Nowhere in Goetz is there a disclosure of an ability to coordinate synchronization of presentations over a network such as the Internet. Accordingly, it is believed that the present claim is patentable since the Examiner's rejections have been overcome, and since the present claim depends on patentable Claim 57.

Regarding Claim 71, the Examiner's rejection is respectfully traversed. The Examiner cites Goetz passages for teaching "controlling a performance of presentation by synchronizing media streams to be presented to the client" and passages from Eilert for teaching "performance goals in a multi-system environment for smooth multimedia presentation". However, neither reference discloses or suggests a leader network node directed by a leader for setting a pace and content of a presentation performance to client nodes on the network wherein the performance is synchronized at the client nodes. That is, neither Goetz nor Eilert teach or disclose (a) through (d) following: (a) synchronizing a network presentation at a plurality of client nodes, (b) providing a leader node wherein a

fuboTV Media Inc.
Exhibit 1015
Page 250

leader directs the pace and content of the presentation, (c) a first and second of the client nodes having alternative versions of the presentation synchronously presented wherein the alternative versions "correspond in content", and (d) a network presentation controlling node through which the leader directs a pace and content of the presentation performance. Accordingly, since the Examiner's rejection is overcome and since the present claim is dependent on patentable Claim 57, it is believed that present Claim 71 is patentable.

Regarding Claim 72, the Examiner's rejection is respectfully traversed. As with the Examiner's reasoning regarding the rejection of Claim 57 hereinabove, the Examiner relies on Figure 9 of Goetz as evidence of a presentation controlling node. However, as pointed out hereinabove, Figure 9 of Goetz has no such presentation controlling node. Moreover, Eilert also has no such presentation controlling node that provides the functionality recited in the present claim. Thus, neither Goetz nor Eilert disclose or suggest a presentation controlling node that transmits to the first client node presentation control information used for identifying a first subcollection of presentation segments for presentation to a user at the first client node. Further, it is believed that neither Goetz nor Eilert teach or suggest a first client node transmitting a presentation request, wherein the presentation request includes information for identifying an alternative segment determined by a leader of a performance of the presentation, and wherein the alternative segment is <u>not</u> identified in a script for the presentation. Accordingly, it is believed that Claim 72 is patentable in that the Examiner's rejection has been overcome.

Regarding Claim 73, the Examiner's rejection is respectfully traversed. The following are believed to be difficulties with the Examiner's reasons for rejection:

fuboTV Media Inc.
Exhibit 1015
Page 251

(a) The Examiner appears to assert that the "content node selector" for changing a selection from a first content supplying node to a second content supplying node is shown in Goetz on column 10, lines 7-14. However, this passage does not teach or suggest selecting different nodes of a network for supplying presentation content to a client node. In particular, the passage of Goetz cited by the Examiner merely refers to the ability of the Goetz system to easily modify the multimedia file 850, wherein this multimedia file contains substantially all versions of both audio and visual media for use in providing a multimedia presentation to a single user node.

(b) The Examiner cites passages from both Goetz and Eilert apparently as evidence of the content node selector changing a selection from the first content supplying node to the second content supplying node according to a value dependent on a measurement related to a previous data transmission rate between the first client node and at least one of the first and second content supplying nodes. Moreover, presumably the value obtained is expected to be indicative of a current data transmission rate between the first client node and at least one of the first and second content supplying nodes. However, neither Goetz nor Eilert singly or in combination provide this aspect of the present claim. In particular, Goetz has no disclosure regarding two content supplying nodes and accordingly a content node selector is not pertinent, and not taught or suggested. Regarding Eilert, the multi-system described therein includes a plurality of servers (e.g., 100-A, 100-B and 100-C). However, there is believed to be no content node selector that changes content supplying nodes, such as during an ongoing presentation at a user network node. Thus, in particular, there is no content node selector that changes content supplying nodes based on a value dependent on

fuboTV Media Inc.
Exhibit 1015
Page 252

a measurement related to a previous data transmission rate. As evidence of this lack of functionality in Eilert, the "Select System Pseudocode" shown in Eilert, column 12, lines 5-25 provides a description as to how a system (i.e., a server) is selected for allocating resources to, e.g., a real-time data stream. Note that there is no provision in the pseudo code for changing a selection of a selected system. Additionally, in column 12, lines 42-46 of Eilert it states that the application allocated to the selected system of the multi-system environment "executes on the system selected by allocate," i.e., "allocate" being the program element that uses the "Select System Pseudocode" identified above. Moreover, even when real-time data stream applications are paused (e.g., by a receiving user), and subsequently restarted, there is no change or reselection of the selected system for executing the paused and restarted application. Furthermore, there is no reselection even if there is sufficient resources available within the multi-system environment but such resources are fragmented across one or more systems therein such that there is not sufficient resources available on any one system (Eilert, column 11, lines 58-63).

Accordingly, it is believed that Claim 73 is patentable since the Examiner's rejections have been overcome, and since Claim 73 is dependent upon patentable Claim 72.

Regarding Claim 74, the Examiner's rejection is respectfully traversed. In particular, the following list (a) - (c) identifies distinctions between the present claim and the Examiner's assertion of obviousness from the Goetz-Eilert combination:

(a) The Goetz-Eilert combination does not teach or suggest a presentation controlling network node that transmits presentation control information to a client node,

fuboTV Media Inc.
Exhibit 1015
Page 253

wherein after the client node receives the presentation control information, a presentation network component at the client node transmits presentation selection information, obtained using the presentation control information, to a content supplying node (e.g., a network information server) for obtaining a portion of the presentation at the client node. As mentioned hereinabove, the Goetz system describes transmissions between only two networked nodes, a server and a client node. Additionally, the Eilert system also provides no disclosure of the three types of network nodes (i.e., presentation controlling network node, client nodes, and content supplying nodes) having communications as provided by the present claim. In particular, there is no teaching or suggestion in the combination of Goetz and Eilert for presentation control information being transmitted to a client node and subsequently the client node transmitting presentation segment selection information to a content providing node.

(b) There is no teaching or suggestion in Goetz and/or Eilert, taken singly or in combination, for synchronizing a performance of a presentation on separate client nodes.

(c) There is also no teaching or suggestion, in Goetz and/or Eilert taken singly or in combination, of a particular one or more of the presentation segments being presented upon a first client node synchronously with an alternative one or more segments being output by one of the content supplying nodes to a second client node, wherein the alternative one or more segments correspond in content to the particular one or more segments presented at the first client node. Accordingly, it is believed Claim 74 is patentable since the Examiner's rejection has been overcome.

fuboTV Media Inc.
Exhibit 1015
Page 254

Regarding Claim 75, the Examiner's rejection is respectfully traversed. In particular, it is believed that there is no teaching or suggestion in the combination of Goetz and Eilert for "selection information" being transmitted from a client node to one of the content supplying nodes, wherein the selection informatic n depends on a transmission characteristic to the client node and from one of the content supplying nodes. For example, in Goetz, it is believed that the only segment selection information provided from a client 910 to the server 920 is the possible selection of a language used in providing a presentation at the client 910. In particular, the following citations from Goetz are illustrative of this assertion: column 2, line 66-column 3, line 1; column 4, line 41-43; and column 6, lines 25-28. Accordingly, it is believed that there is no teaching or suggestion of such selection information being dependent upon data transmission characteristics. Thus, it is believed that the present claim is patentable since the Examiner's rejection has been overcome, and since the present claim is dependent upon patentable claim 74.

Regarding Claims 76-96, the Examiner's rejections are respectfully traversed. The Examiner asserts that these claims are substantially the same as Claims 57-75 and are thus rejected for reasons similar to those in rejecting Claims 57-75. Thus, since the rejections of Claims 57-75 have been overcome, it is accordingly believed that Claims 76-96 are patentable.

However, if the Examiner persists in his rejection of Claims 76-96, it is believed that such a rejection does not satisfy 37 C.F.R. §1.104(b) which states that:

> (b) Completeness of Examiner's action.
> The Examiner's action will be complete as to all matters, except that in appropriate circumstances, such misjoinder of invention, fundamental defects

fuboTV Media Inc.
Exhibit 1015
Page 255

> in the application, and the like, the action of the Examiner may be limited to such matters before further action is made.

Additionally, it is believed that by persisting with the rejections of Claims 76-96, the Examiner's actions are not in line with MPEP 707.07(d) which states that such an omnibus rejection of claims is to be avoided. That is,

> An omnibus rejection of the claim "on the references and for the reasons of record" is stereotyped and usually not informative and should therefore be avoided. This is especially true where certain claims have been rejected on one ground and other claims on another ground.
>
> A plurality of claims should never be grouped together in a common rejection, unless the rejection is equally applicable to all claims in the group.

The Examiner asserts that Claim 76-96 are substantially the same as the Claims 57-75. It is believed that a rejection on such grounds is inappropriate for <u>at least</u> the following reasons:

(a) The Claims 76-96 do not correspond to the Claims 57-75. In particular, the Claims 76-96 introduce new limitations of the present invention that are not cited in Claims 57-75. Illustrations of such limitations are given hereinbelow as (i) - (viii).

(b) It is unclear what "substantially the same" means in that the Claims 76-96 do not correspond one-for-one in content or in aspects of the present invention with the Claims 57-75.

(c) As asserted hereinabove, each of the Claims 57-75 are believed patentable. Accordingly, if the Examiner persists in asserting that Claims 76-96 are "substantially the same", then it is believed that Claims 76-96 are also patentable for the same reasoning, e.g., substantially the same as Claims 57-75.

fuboTV Media Inc.
Exhibit 1015
Page 256

The following list (i) - (viii) includes examples of limitations provided in the Claims 76-96 not provided in the Claims 57-75. Note that this list is not intended to fully address all distinctions between the Claims 57-75 and the Claims 76-96. In particular, the list provided hereinbelow may not include various different combinations of features and limitations of the present invention described in the Claims 76-96, but not recited in the Claims 57-75.

(i) Claim 81 recites "a different network protocol" for an audio portion of a presentation, wherein this "different network protocol" is different from the protocol used in "said step of transmitting".

(ii) Claim 83 recites a limitation of "establishing whether said first subcollection is cached at said first client node within a desired time prior to a performance of the cached subcollection.

(iii) Claims 84 and 85 are dependent on Claim 83 and provides further limitations on the desired time for caching.

(iv) Claim 88 recites that there is a "phone bridge controller for routing, to the client node, the audio portion corresponding in content with the particular video portion."

(v) Claim 89 recites "a script of one or more presentation commands for performing multimedia segments of said presentation wherein a first of said one or more commands references one or more unresolved identifiers of one or more network content supplying nodes". Moreover, the steps provided in this claim of resolving, performing and requesting are not recited in Claims 57-75.

fuboTV Media Inc.
Exhibit 1015
Page 257

(vi) Claim 92 recites that there is a "phone bridge controller for controlling one or more telephone bridges providing audio communication during a performance of the presentation, through a telephone at a client site having said first client node, wherein said telephone provides the audio communication to the client site different from said communications network."

(vii) Claims 93 and 94 both similarly recites "a telephone at a client site".

(viii) Claim 95 recites "said phone bridge routes presentation performance related audio information differently from network communications between said presentation controlling node and first client via said communications network."

Moreover, there are also aspects of the invention cited in Claims 57-75 that are not found in Claims 76-96. For example, the content of Claims 59 and 62 provide inventive aspects not provided in any of the Claims 76-96. In particular, the following portion of Claim 58: "...activated without an intervening manual input from the first user," and the following portion of Claim 62 "...video with motion" are not provided in the Claims 76-96. Note however, that this is not exhaustive of the material (or combinations) in Claims 57-75 that is not in Claims 76-97.

For the reasons set forth hereinabove, reconsideration of the present application and withdrawal of all rejections is hereby requested. In the event that the Examiner has any questions regarding Applicants' position, the Examiner is invited to contact the below named representative at 303 863-2975. No fees are believed due with this Amendment and Response. However, in the event that additional fees are due, please debit Deposit Account 19-1970.

fuboTV Media Inc.
Exhibit 1015
Page 258

Respectfully submitted,

SHERIDAN ROSS P.C.

By: _____

Dennis J. Dupray
Registration No. P-46,299
1560 Broadway, Suite 1200
Denver, Colorado 80202
(303) 863-9700

Date: MAR. 24, 2000

M:\3654\-1\Amendment and Response.wpd

PATENT

27577
#12
B. Sand
4/1/00

I hereby certify that this correspondence being deposited with the United States Postal Service, as first-class mail, in an envelope addressed to: Assistant Commissioner for Patents, Washington, D. C. 20231, on March 24, 2000.

SHERIDAN ROSS P.C..

By: Charity C. Rossm 4/1/00

IN THE UNITED STATES PATENT AND TRADEMARK OFFICE

In re the application of:	Group Art Unit: 2756
OGDON et al.	Examiner: Almari Romero
Serial No.: 09/052,862	
Filed: March 31, 1998	**FIFTH SUPPLEMENTAL INFORMATION DISCLOSURE STATEMENT**
Attorney Docket No.: 3654-1	
For: "METHOD AND SYSTEM FOR PROVIDING A PRESENTATION ON A NETWORK"	

OIPE APR 03 2000 PATENT & TRADEMARK OFFICE

TECH CENTER 2700

Assistant Commissioner for Patents
Washington, D. C. 20231

Sir:

The references cited on attached Form PTO-1449 are being called to the attention of the Examiner. Copies of the cited references:

☒ Are enclosed herewith.

☐ Are not enclosed, in accordance with 37 C.F.R. 1.98(d), because the references were submitted to the U.S. Patent and Trademark Office in prior application Serial No. _____, titled _____, and having a filing date of _____, which is relied upon for an earlier filing date under 35 U.S.C. § 120

☐ To the best of applicants' belief, the pertinence of the foreign-language references are believed to be summarized in the attached English abstracts and in the figures, although applicants do not necessarily vouch for the accuracy of the translation.

☒ Examiner's attention is drawn to the following co-pending applications: Serial No. 60/041,770 filed March 31, 1998.

Submission of the above information is not intended as an admission that any item is citable under the statutes or rules to support a rejection, that any item disclosed represents analogous art, or that those skilled in the art would refer to or recognize the pertinence of any reference without the benefit of

04/05/2000 WWN11 00000073 09052862 240.00 OP

fuboTV Media Inc.
Exhibit 1015
Page 260

hindsight, nor should an inference be drawn as to the pertinence of the references on the order in which they are presented. Submission of this statement should not be taken as an ..ation that a search has been conducted, or that no better art exists.

It is respectfully requested that the cited information be expressly considered during the prosecution of this application and the references made of record therein.

FEES

☐	No fee is believed due in connection with this submission, because the information disclosure statement submitted herewith is being filed: ☐ within three months of the filing date of the application or date of entry into the national stage of an international application or ☐ before the mailing date of a first Office Action on the merits, whichever occurs last. 37 C.F.R 1.97(b). Although no fee is believed due, if any fee is deemed due in connection with this submission, please charge such fee to Deposit Account 19-1970.
☒	The information disclosure statement transmitted herewith is being filed after three months of the filing date of this national application or the date of entry of the national stage as set forth in 37 C.F.R. 1.491 in an international application or after the mailing date of the first Office action on the merits, whichever occurred last but before the mailing date of either: (1) a final action under 37 C.F.R. 1.113 or (2) a notice of allowance under 37 C.F.R. 1.311, whichever occurs first. This Information Disclosure Statement is accompanied by: ☐ A Certification (below) as specified by 37 C.F.R. 1.97(e). Although no fee is believed due, if any fee is deemed due in connection with this submission, please charge such fee to Deposit Account 19-1970. OR ☒ A check in the amount of $240.00 for the fee set forth in 37 C.F.R. 1.17(p) for submission of an information disclosure statement. Please credit any overpayment or charge any underpayment to Deposit Account No. 19-1970.
☐	This Information Disclosure Statement is being submitted after the mailing date of a final action under §1.113 or a notice of allowance under § 1.311, but before payment of the issue fee. ☐ This information Disclosure Statement includes a Certification (below) as specified by 37 C.F.R. 1.97(e) AND ☐ Applicants hereby petition for consideration of the references disclosed herein. Enclosed is a petition fee in the amount of $130.00 under 37 C.F.R. 1.17(i)(1). Please credit any overpayment or charge any underpayment to Deposit Account No. 19-1970.
☐	Applicant elects to pay the fee set forth in 37 C.F.R. 1.17(p) for submission of an information disclosure statement, and the enclosed check includes $240.00 for payment of such fee. Please credit any overpayment or charge any underpayment to Deposit Account No. 19-1970. Election to pay the fee should not be taken as an indication that applicant(s) cannot execute a certification.

Respectfully submitted,

SHERIDAN ROSS, P.C.

Dennis J. Dupray
Registration No. P46,299

SHERIDAN ROSS, P.C.
1560 Broadway, Suite 1200
Denver, CO 80202-5141
303-863-9700
FAX: 303-863-0223

fuboTV Media Inc.
Exhibit 1015
Page 261

SHEET 1 OF 1

FORM PTO-1449 U.S. DEPARTMENT OF COMMERCE PATENT AND TRADEMARK OFFICE	ATTY. DOCKET NO. 3654-1	SERIAL NO. 09/052,862
INFORMATION DISCLOSURE STATEMENT (Use several sheets if necessary)	APPLICANT OGDON et al.	
	FILING DATE March 31, 1998	GROUP ART

OIPE APR 0 3 2000 PATENT & TRADEMARK OFFICE

U.S. PATENT DOCUMENTS

*EXAMINER INITIAL		DOCUMENT NUMBER	DATE	NAME	CLASS	SUB CLASS	FILING DATE IF APPROP.
AR	AA	5,956,716	9/21/99	Kenner et al.	707	10	
AR	AB	5,848,396	12/8/98	Gerace	705	10	
AR	AC	5,625,410	4/29/97	Washino et al.	348	154	
AR	AD	5,473,773	12/5/95	Aman et al.	395	650	
AR	AE	5,473,772	12/5/95	Halliwell et al.	395	650	
AR	AF	5,473,744	12/5/95	Allen et al.	395	154	
AR	AG	5,422,893	6/6/95	Gregg et al.	371	32	

FOREIGN PATENT DOCUMENTS

		DOCUMENT NUMBER	DATE	COUNTRY	CLASS	SUB CLASS	TRANSLATION YES	TRANSLATION NO

OTHER ART (Including Author, Title, Date, Pertinent Pages, etc.)

EXAMINER	DATE CONSIDERED 06/6/00

*EXAMINER: Initial if reference considered, whether or not citation is in conformance with MPEP 609; Draw line through citation if not in conformance and not considered. Include copy of this form with next communication to applicant.

m:\3654\-1\1449-suppl05

DAVID F. ZINGER
CRAIG C. GROSETH
MICHAEL L. TOMPKINS
TODD P. BLAKELY
GARY J. CONNELL
SABRINA C. STAVISH
JOSEPH E. KOVARIK
SUSAN PRYOR WILLSON
LEWIS D. HANSEN
ROBERT R. BRUNELLI
DOUGLAS W. SWARTZ
RICHARD L. HUGHES
BRUCE A. KUGLER
DANA HARTIE CARDWELL
PAUL S. HANSRA
DON D. CHA, Ph.D
BENJAMIN B. LIEB
BRADLEY M. KNEPPER
JOHN C. SCOTT
MIRIAM R. DRICKMAN

SHERIDAN ROSS
A Professional Corporation
ATTORNEYS AND COUNSELORS AT LAW
1560 BROADWAY
SUITE 1200
DENVER, COLORADO 80202-5141

TELEPHONE (303) 863-9700
FACSIMILE (303) 863-0223
E-MAIL srlaw@sheridanross.com

PATENTS
TRADEMARKS
COPYRIGHTS

KERMITH F. ROSS
1910 - 1986

OF COUNSEL
PHILIP H. SHERIDAN
WANNELL M. CROOK
GILBERT E. ALBERDING*
THERESA A. BROWN
*MI. AL. IN Bar Only

TECHNICAL SPECIALISTS
DENNIS J. DUPRAY, Ph.D.
ANGELA DALLAS-PEDRETTI, Ph.D

#14 Bond 6/14/00

FACSIMILE COVER SHEET

TIME: DATE: June 5, 2000

Please deliver the following page(s) to:

Name: Examiner A. Romero

Facsimile Number: (703) 305-9731

OFFICIAL

Our File Number: 3654-1

RECEIVED 6/5/00

Serial Number: 09/052,862

Total Number of Pages, including this cover page: 4

Sender's Name: Christine Jacquet for Dennis J. Dupray

MESSAGE

As requested, please find attached a newly executed Declaration, showing the correct filing date of the Provisional Application (3/31/97).

PLEASE CONFIRM RECEIPT

If you do not receive all the pages, please call Christine Jacquet at (303) 863-9700 X3023.

THIS FACSIMILE MESSAGE IS CONFIDENTIAL AND MAY CONTAIN ATTORNEY PRIVILEGED INFORMATION INTENDED ONLY FOR THE USE OF THE INDIVIDUAL OR COMPANY NAMED ABOVE. If the reader is not the intended recipient, or the employee or agent responsible to deliver it to the intended recipient, you are hereby notified that any dissemination, distribution or copying of this communication is strictly prohibited. If you have received this communication in error, please immediately notify us by telephone, so that we may arrange for the return of the original message to us. Thank you.

BEST COPY

RULE 63 (37 CFR § 1.63)
DECLARATION FOR PATENT APPLICATION
IN THE UNITED STATES PATENT AND TRADEMARK OFFICE

As a below named inventor, I hereby declare that my residence, post office address and citizenship are as stated below next to my name, and I believe I am an original, first and joint inventor of the subject matter which is claimed and for which a patent is sought on the invention entitled "METHOD AND SYSTEM FOR PROVIDING A PRESENTATION ON A NETWORK," the specification of which is identified as Attorney File No. 3654-1 and attached hereto.

I hereby state that I have reviewed and understand the contents of the above-identified specification, including the claims, as amended by any amendment referred to above. I acknowledge the duty to disclose information which is material to patentability in accordance with 37 CFR 1.56(a) and (b) as set forth on the attached sheet indicated Page 3 hereof and which I have read.

I hereby claim foreign priority benefits under 35 U.S.C. 119/365 of any foreign application(s) for patent or inventor's certificate listed below and have also identified below any foreign application for patent or inventor's certificate having a filing date before that of the application on which priority is claimed:

Prior Foreign Application(s)			Priority Claimed	
Number	Country	Day/Month/Year Filed	Yes	No
n/a				

I hereby claim the benefit under 35 U.S.C. 120/365 of all United States and PCT international applications listed below and, insofar as the subject matter of each of the claims of this application is not disclosed in such prior applications in the manner provided by the first paragraph of 35 U.S.C. 112, I acknowledge the duty to disclose information material to patentability in accordance with 37 CFR 1.56(a) and (b) which occurred between the filing date(s) of the prior application(s) and the national or PCT international filing date of this application:

Application Serial No.	Filing Date	Status: patented, pending, abandoned
60/041,770	3/31/97	pending

I hereby declare that all statements made herein of my own knowledge are true and that all statements made on information and belief are believed to be true; and further that these statements were made with the knowledge that willful false statements and the like so made are punishable by fine or imprisonment, or both, under Section 1001 of Title 18 of the United States Code and that such willful false statements may jeopardize the validity of the application or any patent issued thereon.

OFFICIAL

fuboTV Media Inc.
Exhibit 1015
Page 264

(1) Inventor's Signature _____ Date June 2, 00

Inventor's Name (typed): Robert H. Ogdon

Citizenship: USA

Residence: 3 Golden Eagle Lane
Littleton, Colorado 80127

Post Office Address*: Same as Residence

(2) Inventor's Signature _____ Date June 2, 00

Inventor's Name (typed): Frank E. Johnson

Citizenship: USA

Residence: 157 North Buckingham Dr.
Aurora, Illinois 60506

Post Office Address*: Same as Residence

*Complete Post Office Address in full if different from Residence, otherwise indicate that the Post Office Address is "Same as Residence."

37 CFR §1.56(a) and (b)

DUTY TO DISCLOSE INFORMATION MATERIAL TO PATENTABILITY

(a) A patent by its very nature is affected with a public interest. The public interest is best served, and the most effective patent examination occurs when, at the time an application is being examined, the Office is aware of and evaluates the teachings of all information material to patentability. Each individual associated with the filing and prosecution of a patent application has a duty of candor and good faith in dealing with the Office, which includes a duty to disclose to the Office all information known to that individual to be material to patentability as defined in this section. The duty to disclose information exists with respect to each pending claim until the claim is cancelled or withdrawn from consideration, or the application becomes abandoned. Information material to the patentability of a claim that is cancelled or withdrawn from consideration need not be submitted if the information is not material to the patentability of any claim remaining under consideration in the application. There is no duty to submit information which is not material to the patentability of any existing claim. The duty to disclose all information known to be material to patentability is deemed to be satisfied if all information known to be material to patentability of any claim issued in a patent was cited by the Office or submitted to the Office in the manner prescribed by §§1.97(b)-(d) and 1.98. However, no patent will be granted on an application in connection with which fraud on the Office was practiced or attempted or the duty of disclosure was violated through bad faith or intentional misconduct. The Office encourages applicants to carefully examine:

(1) prior art cited in search reports of a foreign patent office in a counterpart application, and

(2) the closest information over which individuals associated with the filing or prosecution of a patent application believe any pending claim patentably defines, to make sure that any material information contained therein is disclosed to the Office.

(b) Under this section, information is material to patentability when it is not cumulative to information already of record or being made of record in the application, and

(1) It establishes, by itself or in combination with other information, a prima facie case of unpatentability of a claim; or

(2) It refutes, or is inconsistent with, a position the applicant takes in:

(i) Opposing an argument of unpatentability relied on by the Office, or

(ii) Asserting an argument of a patentability.

A prima facie case of unpatentability is established when the information compels a conclusion that a claim is unpatentable under the preponderance of evidence, burden-of-proof standard, giving each term in the claim its broadest reasonable construction consistent with the specification, and before any consideration is given to evidence which may be submitted in an attempt to establish a contrary conclusion of patentability.*

*Note, 37 CFR §1.97(h) states: "The filing of an information disclosure statement shall not be construed to be an admission that the information cited in the statement is, or is considered to be, material to patentability as defined in §1.56(b)."

fuboTV Media Inc.
Exhibit 1015
Page 266

Transaction History Date 2000-06-12
Date information retrieved from USPTO Patent Application Information Retrieval (PAIR) system records at www.uspto.gov

OIPE JC110
JUN 12 2000
PATENT & TRADEMARK OFFICE

GAU: 2756

PATENT

2757

I hereby certify that this correspondence is being deposited with the United States Postal Service, as first-class mail, in an envelope addressed to: Assistant Commissioner for Patents, Washington, D. C. 20231, on June 8, 2000.

#15

SHERIDAN ROSS P.C..

By: (Charles C. Logan)

RECEIVED
JUN 13 2000
GROUP 2700

IN THE UNITED STATES PATENT AND TRADEMARK OFFICE

In re the application of:	Group Art Unit: 2756
OGDON et al.	Examiner: Almari Romero
Serial No.: 09/052,862	
Filed: March 31, 1998	**SIXTH SUPPLEMENTAL INFORMATION DISCLOSURE STATEMENT**
Attorney Docket No.: 3654-1	
For: "METHOD AND SYSTEM FOR PROVIDING A PRESENTATION ON A NETWORK"	

Assistant Commissioner for Patents
Washington, D. C. 20231

Sir:

The references cited on attached Form PTO-1449 are being called to the attention of the Examiner. Copies of the cited references:

☒ Are enclosed herewith.

☐ Are not enclosed, in accordance with 37 C.F.R. 1.98(d), because the references were submitted to the U.S. Patent and Trademark Office in prior application Serial No. _____, titled _____, and having a filing date of _____, which is relied upon for an earlier filing date under 35 U.S.C. § 120

☐ To the best of applicants' belief, the pertinence of the foreign-language references are believed to be summarized in the attached English abstracts and in the figures, although applicants do not necessarily vouch for the accuracy of the translation.

☐ Examiner's attention is drawn to the following co-pending applications: _____ _____.

Submission of the above information is not intended as an admission that any item is citable under the statutes or rules to support a rejection, that any item disclosed represents analogous art, or that those skilled in the art would refer to or recognize the pertinence of any reference without the benefit of

fuboTV Media Inc.
Exhibit 1015
Page 267

hindsight, nor should an inference be drawn as to the pertinence of the references based on the order in which they are presented. S. .ission of this statement should not be taken a. .ı indication that a search has been conducted, or that no better art exists.

It is respectfully requested that the cited information be expressly considered during the prosecution of this application and the references made of record therein.

FEES

☐	No fee is believed due in connection with this submission, because the information disclosure statement submitted herewith is being filed: ☐ within three months of the filing date of the application or date of entry into the national stage of an international application or ☐ before the mailing date of a first Office Action on the merits, whichever occurs last. 37 C.F.R 1.97(b). Although no fee is believed due, if any fee is deemed due in connection with this submission, please charge such fee to Deposit Account 19-1970.
☒	The information disclosure statement transmitted herewith is being filed after three months of the filing date of this national application or the date of entry of the national stage as set forth in 37 C.F.R. 1.491 in an international application or after the mailing date of the first Office action on the merits, whichever occurred last but before the mailing date of either: (1) a final action under 37 C.F.R. 1.113 or (2) a notice of allowance under 37 C.F.R. 1.311, whichever occurs first. This Information Disclosure Statement is accompanied by: ☒ A Certification (below) as specified by 37 C.F.R. 1.97(e). Although no fee is believed due, if any fee is deemed due in connection with this submission, please charge such fee to Deposit Account 19-1970. OR ☐ A check in the amount of $240.00 for the fee set forth in 37 C.F.R. 1.17(p) for submission of an information disclosure statement. Please credit any overpayment or charge any underpayment to Deposit Account No. 19-1970.
☐	This Information Disclosure Statement is being submitted after the mailing date of a final action under §1.113 or a notice of allowance under § 1.311, but before payment of the issue fee. ☐ This information Disclosure Statement includes a Certification (below) as specified by 37 C.F.R. 1.97(e) AND ☐ Applicants hereby petition for consideration of the references disclosed herein. Enclosed is a petition fee in the amount of $130.00 under 37 C.F.R. 1.17(i)(1). Please credit any overpayment or charge any underpayment to Deposit Account No. 19-1970.
☐	Applicant elects to pay the fee set forth in 37 C.F.R. 1.17(p) for submission of an information disclosure statement, and the enclosed check includes $240.00 for payment of such fee. Please credit any overpayment or charge any underpayment to Deposit Account No. 19-1970. Election to pay the fee should not be taken as an indication that applicant(s) cannot execute a certification.

fuboTV Media Inc.
Exhibit 1015
Page 268

Certification (37 C.F.R. 1.97(e))
(Applicable only if checked)

RECEIVED
JUN 13 2000
GROUP 2700

☒ The undersigned certifies that:

☐ Each item of information contained in this information disclosure statement was cited in a communication from a foreign patent office in a counterpart foreign application not more than three months prior to the filing of this statement. 37 C.F.R. 1.97(e)(1).

☐ A copy of the communication from the foreign patent office is enclosed.

OR

☒ No item of information contained in this information disclosure statement was cited in a communication from a foreign patent office in a counterpart foreign application or to the knowledge of the undersigned after making reasonable inquiry, was known to any individual designated in 37 C.F.R. 1.56(c) more than more than three months prior to the filing of this statement. 37 C.F.R. 1.97(e)(2).

Respectfully submitted,

SHERIDAN ROSS, P.C.

Dennis J. Dupray
Registration No. 46,299

SHERIDAN ROSS, P.C.
1560 Broadway, Suite 1200
Denver, CO 80202-5141
303-863-9700
FAX: 303-863-0223

fuboTV Media Inc.
Exhibit 1015
Page 269

OIPE JC110
JUN 1 2 2000
PATENT & TRADEMARK OFFICE

RECEIVED
JUN 13 2000
GROUP 2700

SHEET 1 OF 1

FORM PTO-1449 U.S. DEPARTMENT OF COMMERCE PATENT AND TRADEMARK OFFICE	ATTY. DOCKET NO. 3654-1	SERIAL NO. 09/052,862
INFORMATION DISCLOSURE STATEMENT (Use several sheets if necessary)	APPLICANT OGDON et al.	
	FILING DATE March 31, 1998	GROUP ART

U.S. PATENT DOCUMENTS

*EXAMINER INITIAL		DOCUMENT NUMBER	DATE	NAME	CLASS	SUB CLASS	FILING DATE IF APPROP.
ar	AA	5,999,525	12/7/99	Krishnaswamy et al.	370	352	
ar	AB	5,956,716	9/21/99	Kenner et al.	707	10	
ar	AC	5,867,494	2/2/99	Krishnaswamy et al.	370	352	

FOREIGN PATENT DOCUMENTS

		DOCUMENT NUMBER	DATE	COUNTRY	CLASS	SUB CLASS	TRANSLATION YES	TRANSLATION NO

OTHER ART (Including Author, Title, Date, Pertinent Pages, etc.)

EXAMINER	DATE CONSIDERED
Amare Romero	06/18/00

*EXAMINER: Initial if reference considered, whether or not citation is in conformance with MPEP 609; Draw line through citation if not in conformance and not considered. Include copy of this form with next communication to applicant.

m:\3654\-1\1449-suppl06

UNITED STATES DEPARTMENT OF COMMERCE
Patent and Trademark Office
Address: COMMISSIONER OF PATENTS AND TRADEMARKS
Washington, DC 20231

APPLICATION NO.	FILING DATE	FIRST NAMED INVENTOR	ATTORNEY DOCKET NO.
09/052,862	03/31/98	OGDON R	3654-1

022442
SHERIDAN ROSS PC
1560 BROADWAY
SUITE 1200
DENVER CO 80202

LM51/0614

EXAMINER
ROMERO, A

ART UNIT	PAPER NUMBER
2756	13

DATE MAILED: 06/14/00

Please find below and/or attached an Office communication concerning this application or proceeding.

Commissioner of Patents and Trademarks

Interview Summary	Application No. 09/052,862	Applicant(s) Ogdon et al.	
	Examiner Almari Romero		Group Art Unit 2756

All participants (applicant, applicant's representative, PTO personnel):

(1) *Almari Romero, USPTO* (3) _____

(2) *Mr. Dennis Dupray, Reg # 46,299* (4) _____

Date of Interview *May 24, 2000*

Type: ☒ Telephonic ☐ Personal (copy is given to ☐ applicant ☐ applicant's representative).

Exhibit shown or demonstration conducted: ☐ Yes ☒ No. If yes, brief description:

Agreement ☒ was reached. ☐ was not reached.

Claim(s) discussed: *Claims 93 and 94*

Identification of prior art discussed:
NONE

Description of the general nature of what was agreed to if an agreement was reached, or any other comments:
Examiner requested to the Applicant to cancel one of the duplicate claims 93 or 94. Applicant authorized Examiner to cancel duplicate claim 94.

(A fuller description, if necessary, and a copy of the amendments, if available, which the examiner agreed would render the claims allowable must be attached. Also, where no copy of the amendents which would render the claims allowable is available, a summary thereof must be attached.)

1. ☒ It is not necessary for applicant to provide a separate record of the substance of the interview.

Unless the paragraph above has been checked to indicate to the contrary, A FORMAL WRITTEN RESPONSE TO THE LAST OFFICE ACTION IS NOT WAIVED AND MUST INCLUDE THE SUBSTANCE OF THE INTERVIEW. (See MPEP Section 713.04). If a response to the last Office action has already been filed, APPLICANT IS GIVEN ONE MONTH FROM THIS INTERVIEW DATE TO FILE A STATEMENT OF THE SUBSTANCE OF THE INTERVIEW.

2. ☐ Since the Examiner's interview summary above (including any attachments) reflects a complete response to each of the objections, rejections and requirements that may be present in the last Office action, and since the claims are now allowable, this completed form is considered to fulfill the response requirements of the last Office action. Applicant is not relieved from providing a separate record of the interview unless box 1 above is also checked.

Almari Romero

Examiner Note: You must sign and stamp this form unless it is an attachment to a signed Office action.

fuboTV Media Inc.
Exhibit 1015
Page 272

Transaction History Date 2000-06-20
Date information retrieved from USPTO Patent Application Information Retrieval (PAIR) system records at www.uspto.gov

(#10)

Notice of Allowability	Application No. 09/052,862	Applicant(s) Ogdon et al.
	Examiner Almari Romero	Group Art Unit 2756

All claims being allowable, PROSECUTION ON THE MERITS IS (OR REMAINS) CLOSED in this application. If not included herewith (or previously mailed), a Notice of Allowance and Issue Fee Due or other appropriate communication will be mailed in due course.

☒ This communication is responsive to 3/28/00.

☒ The allowed claim(s) is/are 57-96.

☐ The drawings filed on _____ are acceptable.

☐ Acknowledgement is made of a claim for foreign priority under 35 U.S.C. § 119(a)-(d).

☐ All ☐ Some* ☐ None of the CERTIFIED copies of the priority documents have been

☐ received.

☐ received in Application No. (Series Code/Serial Number) _____.

☐ received in this national stage application from the International Bureau (PCT Rule 17.2(a)).

*Certified copies not received: _____.

☒ Acknowledgement is made of a claim for domestic priority under 35 U.S.C. § 119(e).

A SHORTENED STATUTORY PERIOD FOR RESPONSE to comply with the requirements noted below is set to EXPIRE **THREE MONTHS** FROM THE "DATE MAILED" of this Office action. Failure to timely comply will result in ABANDONMENT of this application. Extensions of time may be obtained under the provisions of 37 CFR 1.136(a).

☐ Note the attached EXAMINER'S AMENDMENT or NOTICE OF INFORMAL APPLICATION, PTO-152, which discloses that the oath or declaration is deficient. A SUBSTITUTE OATH OR DECLARATION IS REQUIRED.

☒ Applicant MUST submit NEW FORMAL DRAWINGS

☒ because the originally filed drawings were declared by applicant to be informal.

☐ including changes required by the Notice of Draftsperson's Patent Drawing Review, PTO-948, attached hereto or to Paper No. _____.

☐ including changes required by the proposed drawing correction filed on _____, which has been approved by the examiner.

☐ including changes required by the attached Examiner's Amendment/Comment.

Identifying indicia such as the application number (see 37 CFR 1.84(c)) should be written on the reverse side of the drawings. The drawings should be filed as a separate paper with a transmittal lettter addressed to the Official Draftsperson.

☐ Note the attached Examiner's comment regarding REQUIREMENT FOR THE DEPOSIT OF BIOLOGICAL MATERIAL.

Any response to this letter should include, in the upper right hand corner, the APPLICATION NUMBER (SERIES CODE/SERIAL NUMBER). If applicant has received a Notice of Allowance and Issue Fee Due, the ISSUE BATCH NUMBER and DATE of the NOTICE OF ALLOWANCE should also be included.

Attachment(s)

☒ Notice of References Cited, PTO-892

☒ Information Disclosure Statement(s), PTO-1449, Paper No(s). 12 and 15

☐ Notice of Draftsperson's Patent Drawing Review, PTO-948

☐ Notice of Informal Patent Application, PTO-152

☐ Interview Summary, PTO-413

☒ Examiner's Amendment/Comment

☐ Examiner's Comment Regarding Requirement for Deposit of Biological Material

☐ Examiner's Statement of Reasons for Allowance

ZARNI MAUNG
PRIMARY EXAMINER

fuboTV Media Inc.
Exhibit 1015
Page 273

EXAMINER'S AMENDMENT

1. An examiner's amendment to the record appears below. Should the changes and/or additions be unacceptable to applicant, an amendment may be filed as provided by 37 CFR 1.312. To ensure consideration of such an amendment, it MUST be submitted no later than the payment of the issue fee.

Authorization for this examiner's amendment was given in a telephone interview with Mr. Dennis Dupray, Reg# 46,299 on May 24, 2000.

2. In the claims, please cancel claim 94.

REASONS FOR ALLOWANCE

3. The following is an examiner's statement of reasons for allowance: The prior art of record does not teach or suggest "... a presentation controlling node for transmitting to at least said first client node, via the communications network, presentation control information used for identifying said first and second subcollections; a computational component for determining network performance information of the communications network, wherein said computational component determines said network performance information using network data obtained from network transmissions detected at said first client node; a first segment selector, activated after said first client node receives said presentation control information, for selecting, using said network performance information, one of said first and second subcollections for transmitting from one of said presentation content supplying nodes to said first client node..." as disclosed and claimed. The Examiner notes that Applicant has specifically pointed out and argued this feature of the claimed invention with regard to patentability in the response at page 5, paragraph 2 - page 6, paragraph 2.

Any comments considered necessary by applicant must be submitted no later than the payment of the issue fee and, to avoid processing delays, should preferably accompany the issue fee. Such submissions should be clearly labeled "Comments on Statement of Reasons for Allowance."

Conclusion

4. Any inquiry concerning this communication or earlier communications from the examiner should be directed to Almari Romero whose telephone number is (703) 305-0749. The examiner can normally be reached on Mondays-Fridays from 7:30 A.M. to 4:30 P.M.

If attempts to reach the examiner by telephone are unsuccessful, the examiner's supervisor Frank Asta, can be reached on (703) 305-3817. The fax phone number for this Group is (703) 305-9731.

Any inquiry of a general nature or relating to the status of this application or proceeding should be directed to the Group receptionist whose telephone number is (703) 305-3900.

af

ZARNI MAUNG
PRIMARY EXAMINER

Notice of References Cited	Application No. 09/052,862	Applicant(s) Ogdon et al.	
	Examiner Almari Romero	Group Art Unit 2756	Page 1 of 1

U.S. PATENT DOCUMENTS

*		DOCUMENT NO.	DATE	NAME	CLASS	SUBCLASS
x	A	5,642,151	6/1997	Nusbickel et al.	348	6
	B					
	C					
	D					
	E					
	F					
	G					
	H					
	I					
	J					
	K					
	L					
	M					

FOREIGN PATENT DOCUMENTS

*		DOCUMENT NO.	DATE	COUNTRY	NAME	CLASS	SUBCLASS
	N						
	O						
	P						
	Q						
	R						
	S						
	T						

NON-PATENT DOCUMENTS

*		DOCUMENT (Including Author, Title, Source, and Pertinent Pages)	DATE
	U	Anonymous, "Putting the magic in mulitmedia", Computer Design, v30, n12, page 31.	9/1991
	V	Adjeroh et al., "Synchronization Mechanisms for Distributed Multimedia Presentation Systems", IEEE, pages 30-37.	8/1995
	W		
	X		

* A copy of this reference is not being furnished with this Office action.
(See Manual of Patent Examining Procedure, Section 707.05(a).)

01466947/9
DIALOG(R)File 275:Gale Group Computer DB(TM)
(c) 2000 The Gale Group. All rts. reserv.

01466947 SUPPLIER NUMBER: 11302655 (THIS IS THE FULL TEXT)
Putting the magic in multimedia. (profile of Fluent Machines)
Computer Design, v30, n12, p31(1)
Sept, 1991
ISSN: 0010-4566 LANGUAGE: ENGLISH RECORD TYPE: FULLTEXT; ABSTRACT
WORD COUNT: 719 LINE COUNT: 00059

ABSTRACT: A Computer Design Editor's Award for Leadership in Technology and Design is presented to Fluent Machines Inc, a multimedia developer founded in 1989 by Dave Nelson, cofounder of Apollo Computer. Fluent has produced some hardware based on its Fluency multimedia architecture, most recently a two-board set for capturing, digitizing, compressing, storing and playing digital audio and video on PC-based machines, but its main focus is its multimedia software architecture, Fluentstreams, which Nelson estimates contains more than 20,000 lines of C code. Central to Fluentstreams is Smartstreams, a language-based encoding system Nelson envisions as becoming the same sort of standard for multimedia data representation that PostScript has become for data representation in laser printing.

TEXT:

When any technology becomes sufficiently complex, it's tempting to regard it as "magic." When magic is too simple a term, then "multimedia" is often used in its place. Dave Nelson, cofounder of Apollo Computer and now chairman of Fluent Machines (Framingham, MA), doesn't use the word at all. But that's not because his new product doesn't fit the multimedia mold. Indeed, it may fit the mold better than the rest.

Multimedia is an "umbrella" term. Unlike the terms "graphics" or "local area networking," that convey some kind of software and hardware solution to a computer problem, "multimedia" systems embrace many technologies, including video and audio capture, compression, and LAN. Software and/or hardware must be part of a multimedia offering. If one is omitted, then the system isn't complete.

Dave Nelson's Fluent Machines has a complete multimedia solution, even though he will not say so. He's been busy working on it since he founded his new company in 1989. Fluent Machines already has over 35 people working for it, and the company's multimedia architecture solution, called Fluency, recently left the starting gate.

Full-motion video networks

Fluent's focus lets developers integrate full-motion digital video and synchronized audio into computer systems. But Fluent doesn't stop there. What differentiates Fluent from the rest of the pack is an architecture that promises to allow both audio and video data to be served up over a network of machines. That means that Fluency can't stop at just acquiring video and audio data by hooking a microphone and video camera up to a PC. The data must be processed, compressed and the results stored to disk and retrieved. In some applications the data must be transmitted over a network. Fluent plans to let both audio and video be transmitted over a network no matter what the available bandwidth of that network might be. That implies measuring the network's bandwidth and dynamically altering the compression ratio of the data to fit the bandwidth available.

Any multimedia scheme such as this, of course, is quite useless unless software developers can take advantage of the underlying software and/or hardware provided to them. For Nelson that meant Fluent had to provide its own application programming interface (API) that would accommodate developers wishing to integrate video and audio capture, playback and editing into their Windows 3.0 PC-based applications. The API consists of a group of functions that can be used to perform different operations on the data.

Acquiring, displaying, compressing and transmitting audio and video data today means building some hardware. Fluent Machines has already unwrapped an i960CA RISC-based two-board AT-compatible set for capturing, digitizing, compressing, storing, and playing digital audio and video on PC-based machines.

Nelson says, however, that it's the company's multimedia software architecture, rather than the specifics of the hardware itself, that sets it aside from others in the multimedia pack. "Fluent is not a hardware company, even though we have built some hardware," he says. Aside from capturing the video and audio data, the hardware is simply used to accelerate the processing and display process. "There's no reason, that given faster workstations, the whole processing function shouldn't be carried out by the host," Nelson says.

Fluentstreams is key

Fluentstreams is Fluency's software architecture. Nelson's engineering team developed real-time operating system software, data structures and control logic to manage synchronization, scheduling, storage and display of multiple video and audio data streams, in addition to the task of executing algorithms for video and audio compression and decompression. Nelson estimates that Fluentstreams comprises over 20,000 lines of C code. When a PC is configured to run with the AT board set, Fluentstreams software is partitioned between the host and the board set. The board set runs a custom operating system, compression and decompression algorithms as well as analog-to-digital conversion code. The call-based API resides on the host.

At the center of Fluentstreams is a language-based encoding system called Smartstreams. Nelson hopes Smartstreams encoding methodology will become a standard for audio- and video-data representation such as Postscript became the standard for data representation in laser printing.

CAPTIONS: Dave Nelson. (portrait)

COPYRIGHT 1991 PennWell Publishing Company

SPECIAL FEATURES: illustration; portrait
COMPANY NAMES: Fluent Machines Inc.--Management
DESCRIPTORS: Multimedia Technology; New Company; Company Profile
NAMED PERSONS: Nelson, Dave--Management
SIC CODES: 3571 Electronic computers
FILE SEGMENT: CD File 275
?

Synchronization Mechanisms for Distributed Multimedia Presentation Systems

Donald A. Adjeroh and M. C. Lee
Department of Computer Science
The Chinese University of Hong Kong, Hong Kong
e-mail: donald@cs.cuhk.hk mclee@cs.cuhk.hk

Abstract- *We present some mechanisms to ensure synchronization in distributed multimedia presentations, in the presence of multiple remote sources, limited network bandwidth, statistical network delays, and asynchronous user interaction. The various network problems are modelled as bounded probabilistic delays. Using an interval based presentation schedule, the mechanisms predict the optimal time to initiate the request for the multimedia objects. From the presentation schedule, we construct a presentation graph using a timed Petri net structure with additional time parameters. The new time parameters provide a greater modelling power to the Petri net representation and thus provide ways to capture special user interaction. In particular, using the concepts of hypermedia links and parallel temporal relations we extend the hierarchical modelling capability of the Petri net representation to form a global presentation graph, with which the mechanisms support asynchronous user modification of the presentation sequence.*

Keywords: multimedia synchronization, network delays, multimedia presentation, user interaction

1. Introduction

Multimedia presentation is concerned with the co-ordinated integration and display of a variety of data types ranging from static media objects such as text, images, and graphics to data objects in the form of continuous media such as audio and video. Continuous media data in particular have an intrinsic timing relationship between the sequences of data that constitute their streams, thereby imposing strict temporal constraints in their presentation. Their characteristic temporal dependencies imply that presentations involving continuous media data will be influenced by such issues as clock variations, network delays, and delay variations. When some or all the information making up the multimedia document is being retrieved from several remote sites over a network, the problem of meeting the temporal requirements is compounded by the limited network bandwidth and the statistical delays that may be encountered by the multimedia data. Some techniques are thus needed to ensure that the multimedia objects are presented at the right time and in the right sequence, and that discontinuities are not observed in the presentation.

The paper describes some predictive mechanisms that can be used to ensure synchronization in network-based multimedia presentations in the presence of distributed multiple sources of data, limited network bandwidth, statistical network delays, and asynchronous user interaction. The various network problems are modelled as bounded probabilistic delays. We relate the network bandwidth limitation to time delays and thus model the bandwidth problem as having the ultimate effect of imposing some delays on the arrival of the requested multimedia objects. Also, we provide relationships for the maximum packet delay that can be tolerated to avoid jitter within streams, and for skew between different streams. Thus we use statistical, but bounded delays to compensate for the problems of bandwidth limitation, skew, jitter, and end-to-end delays. With the notion of *global presentation* graph, the concept of hypermedia linking, and the hierarchical modelling power of the Petri net representation, the paper describes how asynchronous user modification of the presentation sequence is supported by the proposed mechanisms.

2. Background and related work

Audio and video data streams are usually referred to as continuous media, in that, there is an intrinsic timing relationship between the sequences of data that constitute their streams. Their characteristic temporal dependencies imply that presentations involving continuous media will be influenced by such constraints as clock variations, network delays, and delay variations. Thus, in presenting multimedia data, the spatial and temporal aspects of the data must be carefully considered. This calls for some mechanisms to ensure that when the multimedia objects

0-8186-7168-8/95 $04.00 © 1995 IEEE

fuboTV Media Inc.
Exhibit 1015
Page 280

are presented, the user sees a smooth flow of information, regardless of the inherent time constraints and possibly different spatial locations of the component data. The provision of such mechanisms is the main objective of synchronization in multimedia systems.

The problem of synchronization in a distributed multimedia presentation can be traced to various factors. These include the multiplicity of data objects, spatial distribution of the objects, statistical communication network, temporal constraints, and user interaction. Although some of the problems such as network problems can be reduced by using high QOS specifications and the availability of high bandwidth, these are still very costly and difficult to provide. Thus, in the near future, the general support for distributed multimedia communication may still have to be based on simple networks that may not be able to provide the needed high QOS. Then, alternative mechanisms have to be devised to ensure synchronized distributed multimedia presentations, even with limited network bandwidth, possibly low QOS, and asynchronous user interaction.

There has been attempts at the synchronization problem by use of low level protocols. Nicolaou [14] defined a set of synchronization properties and then proposed an architecture in the framework of a distributed computing system to provide synchronization operations based on the properties. Another approach [17] centred on providing transport protocols to enforce synchronization by compensating for skew between the data streams. Synchronization techniques based on feedback messages between the source and the receiver to prevent buffer overruns and/or starvation have also been proposed [18]. The protocols suggested above are generally at a lower level than the mechanisms presented here, and most tend to assume the availability of enough bandwidth or high QOS.

Efforts have also been made to provide higher level support for multimedia synchronization mainly in terms of programming constructs and tools for specifying synchronization [2, 6, 16, 19]. Apart from the proposals in [2] and [19] the others were either based on a single local source of multimedia data, or did not consider continuous media. In addition, though the programming constructs can specify the synchronization reqirements, they lack the mechanisms to guarantee that such requirements are met.

Predictive synchronization mechanisms that have been proposed include the *time-advance* model [7] and the *look-ahead* method [11]. In the time-advance model, the required multimedia data is computed ahead of the presentation time based on a global clock which is set to be fast by a fixed amount of time. This may work for a single local source of multimedia data, but may become too inflexible in a presentation environment involving multiple distributed sources of data over a statistical communication network. The mechanisms presented here are more similar to the synchronization strategies proposed in [11]. However, our retrieval schedule accounts for both delay jitter and skew and also for the effect of possible network delays on the request messages. In addition, our presentation graph extended the timed Petri net model of the Object Composition Petri Nets by providing it with the capability for dynamic modification of the amount of consumed resources. This added modelling capability provided our mechanisms with the ability to support dynamic and flexible user interaction - both in the provision of special effects and in asynchronous modification of the presentation sequence.

3. Predictive synchronization mechanisms

In this section, we describe our approach to multimedia synchronization. We call it *predictive synchronization* since it is premised on predicting the optimal retrieval schedule based on the desired presentation time and network characteristics. We describe how the mechanisms support flexible and special user interaction in section 4.

3.1 Presentation schedule

In contrast to *live* multimedia data (e.g. live video), the timing requirements of stored media streams can be known in advance. Thus, for a class of multimedia presentations, such as presentation of stored multimedia data for demonstrations, learning, advertising, news casting, etc., it is possible to specify the relative time at which each object involved is to be presented. We capture such a specification with a *presentation schedule* which indicates the duration, and relative presentation deadline for each multimedia object.

The notion of time *instants* and time *intervals* [1] has been used extensively in temporal modelling. An instant is a moment on a time line, with an effective duration of zero seconds. An interval is a duration between two instants. Intervals can be specified with respect to other intervals to form temporal relations. Relations between intervals is represented using some abstractions namely *starts, finishes, equals, during, before, overlaps*, and *meets*. This basic model has been extended to capture multiple and *reverse* temporal relations [12]. We distinguish between *sequential* and *parallel* relations and use the later to support dynamic user interaction.

For the specification of the presentation schedule, we use multiple temporal relations [12], and the notion of *atomic data units*. For any given media stream, the atomic data unit is the smallest data item that can be presented, such as a video frame or an audio sample. Each atomic data unit has a presentation duration equivalent to an *atomic interval* (e.g. 1/30s for a video frame). The atomic interval is the same for any given

fuboTV Media Inc.
Exhibit 1015
Page 281

media type and is the smallest interval recognised in the schedule. Thus the presentation duration of any stream can be expressed as a multiple of the atomic interval of the media type making up the stream.

With this representation, multiple streams can be accommodated using multiple temporal relations. The time instants making up the time intervals represent the relative points in time during which the particular media stream will be presented. With only the knowledge of the presentation time of the first object, the presentation times of all other objects can be calculated based on their temporal relations. Thus the particular time instant at which a presentation will start can easily be modified without affecting the entire schedule. Figure 1 shows a presentation schedule for some different media streams.

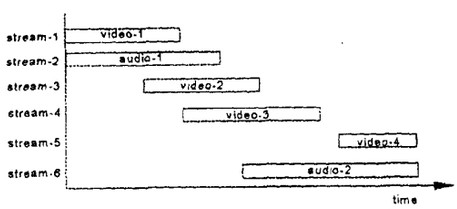

Figure 1. Time line for presentation of 6 media objects

3.2 The presentation graph

Using the presentation schedule, we construct a *presentation graph* representing the multimedia objects, their intervals and their temporal relations as a timed

Petri net. The Petri net representation [13, 15] is well known for its ability to model both concurrent and sequential activities, and also provides attractive properties for capturing the unique requirements of multimedia presentation. A Petri net is a bipartite graph defined as a triple: $N=(T,P,A)$, where $P \cap T = \emptyset$, $T=\{t_1, t_2, ..., t_m\}$ is a finite set of transitions; $P=\{p_1, p_2, ..., p_n\}$ is a finite set of places; $A:\{P \times T\} \cup \{T \times P\}$ is a set of arcs representing the flow relation. The Petri net could be marked or unmarked. For a marked Petri net, the definition is: $N=(T,A,P,M)$, where $M : P \rightarrow I$, $I = \{0, 1, 2, ...\}$ is a mapping from the set of places to the integers. The firing of a transition removes some token from its input places and deposits some token in its out places, thus modifying the markings in the Petri net.

In timed Petri nets, the concept of time is introduced into the classical Petri net definition. Here, some time delay is associated with the places and/or transitions in the net, and thus provides more modelling power to the Petri net definition. We use a modified form of timed Petri nets [3] to represent our presentation graph and adopt an approach similar to the Object Composition Petri Nets (OCPN) [11]. Thus our presentation graph is a 7-tuple, defined as follows:

$P_G = \{T, P, A, D, B, R, M\}$ where $P \cap T = \emptyset$

$T = \{t_1, t_2, ..., t_m\}$ is a finite set of transitions

$P = \{p_1, p_2, ..., p_n\}$ is a finite set of places

$A : \{P \times T\} \cup \{T \times P\}$ is a set of arcs representing the flow relation

$M: P \rightarrow I$, $I = \{0, 1, 2, ...\}$ is a marking

$D: P \rightarrow R^+$ is a mapping from a set of places to the non-negative real numbers and represents the presentation intervals

$B: P \rightarrow R^+$ is a mapping from the set of places to the non-negative real numbers, representing the amount of consumed resources

$R: P \rightarrow \{r_1, r_2, ..., r_j\}$ is a mapping from the set of places to a set of multimedia objects

The transitions in our Petri net structure are instantaneous and model the start and end of events such as the presentation of an object. The places represent the multimedia objects to be presented. Each place p_i is assigned a delay time τ_{pi} corresponding to the presentation interval of the represented object. Also another time parameter, the *consumption parameter* τ^b_{pi} is associated with each place p_i and models the amount of the multimedia resource so far consumed (or presented) at any given time. A token in place p_i becomes *ready* to enable a transition after τ_{pi} time units, starting from the time p_i receives the token. A transition fires only when all the tokens in all its input places become ready. This implies that a place with a completely consumed object (i.e. $\tau^b_{pi} = \tau_{pi}$) may still have to wait for some time before its output transition is fired. The places in our timed Petri nets are also used to represent dummy delays which may be needed to support the various forms of temporal relations that may exist between the multimedia objects. A place could also represent a condition, in which case the delay time (i.e. presentation interval) is zero. Places with zero presentation interval are primarily used to avoid transition-to-transition arcs, thus maintaining consistency in the Petri net representation. Generally, given a multimedia object/resource represented by place p_i, the following four situations can be identified depending on the stage of the object's consumption:

$\tau^b_{pi} = 0$: Object consumption has not yet started.

$0 < \tau^b_{pi} < \tau_{pi}$: Resource is currently under consumption. Token loked in place p_i.

$\tau^b_{pi} \geq \tau_{pi}$: Consumption of the resource is completed, but the token is not yet removed from place p_i. The token in place p_i is ready to enable the output transition of p_i. If $\tau^b_{pi} > \tau_{pi}$, it signifies that the resource is waiting to be synchronized with some other resource(s).

τ^b_{pi} = *null*: Resource has already been presented and the token removed.

Figure 2 shows the presentation graph for the presentation schedule of Figure 1. Apart from capturing the presentation schedule, the presentation graph also forms the basis for supporting dynamic user interaction.

fuboTV Media Inc.
Exhibit 1015
Page 282

By manipulating the consumption parameter for the places, transitions can be caused to fire, thus tokens can be removed from or deposited in a place, and the consumption of resources can be started, stopped, speeded up, etc. This capability is the basic mechanism used to support special user interaction.

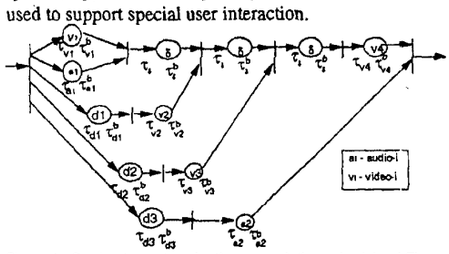

Figure 2. Petri net structure for the presentation schedule of Figure 1. The places labelled δ are used to avoid transition-to-transition arcs, while those with d_i's represent dummy delays needed to capture the temporal relations among the objects.

3.3 Modelling network delays

Majority of the synchronization problems in multimedia presentation in a distributed environment can be traced to various delays in the network. The delays can be caused by different factors such as transmission time, packetization, compression and decompression, CPU speed, channel establishment schemes, scheduling algorithms at the nodes, etc. The network delays are often statistical in nature, but can be bounded to some minimum and maximum values. For instance, Goyal et al, [9] have defined a class of scheduling algorithms with delay guarantee and proposed a method for determining the bounds on delays for heterogeneous networks where the scheduling schemes used by the networks fall into the guarantee rate class. Our synchronization mechanisms are based on network delays and we assume that the delays are statistical, but bounded, and that the bounds on the delays can be determined using some techniques, such as those proposed in [4, 5, 8, 9].

3.4 Modelling limited bandwidth

Multimedia data -especially continuous media usually require large storage space and often place high demand on the network capacity in order to meet its time constraints. However most generally available networks do not meet the huge bandwidth requirements of multimedia data. This bandwidth limitation poses a major problem for synchronization in multimedia presentation. We view the problem of limited bandwidth as having the ultimate effect of imposing some delays on the arrival of the requested multimedia objects. Less bandwidth will lead to transmitting more packets and thus more time will be incurred before all the required data items are received at the destination.

Claim 1 *A channel of capacity X can be mapped into a channel of capacity Y by incorporating an appropriate time delay between transmissions on the channels.*

Proof

Put differently, given that we wish to send D_A units of data from point P_1 to point P_2 and we have available, two communication channels CH_1 and CH_2 of channel capacities C_1 and C_2, ($C_1 \geq C_2$). We wish to find some time advance T_A, ($T_A \geq 0$) such that if we start transmitting over CH_2 T_A time units ahead of CH_1, the last of the D_A data units from the two channels will arrive at point P_2 at the same time, neglecting packetization delays.

Given C_1 = Bandwidth of channel CH_1, C_2 = Bandwidth of channel CH_2, D_A = Total amount of data to be sent (in packets). Let P_s = packet size for both channels, T_{C1} = time to deliver all the data over CH_1, T_{C2} = time to deliver all the data over CH_2. Then $T_{C1} = D_A.P_s/C_1$, $T_{C2} = D_A.P_s/C_2$ and

$$T_{C2} - T_{C1} = D_A . P_s \frac{C_1 - C_2}{C_1 . C_2}$$

Thus if we choose $T_A = T_{C2} - T_{C1}$, and start to transmit over CH_2 at T_A time units ahead of CH_1, then the last of the D_A data packets from CH_2 will arrive at point P_2 at the same time as the last of the D_A data packets from CH_1.

If we relax the condition $C_1 \geq C_2$, T_A can become negative (i.e. negative time advance), indicating that channel CH_2 has more bandwidth and thus transmission over it should start later - after some time delay. Therefore, a low capacity channel can be mapped to a high capacity channel and vice versa by using some time delay on one of the channels. ■

The delay introduced by the bandwidth limitation will be statistical since each packet will still experience the probabilistic network delays. However, the delay can be bounded to a given range. Thus we model the network bandwidth limitation in terms of an additional bounded and probabilistic delay.

3.5 Predicting the retrieval schedule

Having specified the relative presentation times for the multimedia objects (section 3.1), the problem of synchronization reduces to ensuring that the objects are presented at their scheduled times, regardless of network delays, bandwidth limitation, and other network problems. To achieve this, we need to derive a *retrieval schedule* from the presentation schedule based on network characteristics and the characteristics of the multimedia objects. The retrieval schedule specifies the actual time at which requests for the multimedia objects must be made by the presentation system to ensure that they will be available for presentation as specified in the presentation schedule. To determine the presentation schedule, we need a *control time*, T_c such that scheduling the retrieval request to be made at time T_c units ahead of the actual presentation time will always guarantee meeting the presentation schedule. Thus our model for control time accommodates the possible delays that may be encountered by the request messages before they reach

fuboTV Media Inc.
Exhibit 1015
Page 283

the source. To determine the optimal control time, we consider three cases viz. single data unit, multiple data units in a single stream and multiple streams.

Control Time for Single Data Unit. For the case of a single data unit, we consider the *end-to-end* delay. We use the end-to-end delay to capture the delays experienced by the packet, right from the source to the time it is presented. It varies from live media data to stored media data and also from one media to the other. It is affected by such factors as coding, compression, packetization, propagation, CPU speed, etc. Note that here delay due to bandwidth limitation is not part of this end-to-end delay since we expect that a single data unit cannot require more than the available bandwidth.

As shown in Figure 3, to meet the presentation schedule for this single data unit, the request for the data unit must be made well in advance to compensate for the end-to-end delay, and also for the time the initial request for the data unit will take before it reaches the source.

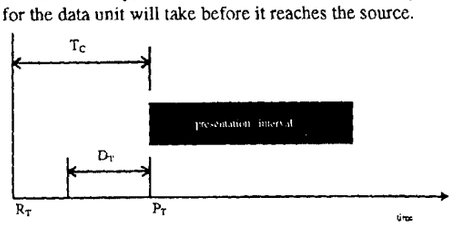

Figure 3. Control Time

If the total delay experienced by the single data unit is D_T, then to guarantee that the data unit will be available at the presentation site by the scheduled presentation time, we choose a control time T_c such that $T_c \geq D_T$. The *request time* R_T for the single data unit (i.e. the time at which the request for the data unit will be made by the presentation system) is then given by: $R_T = P_T - T_c$, where P_T is the scheduled presentation time.

Control Time for a Single Data Stream. For the case of multiple data units of the same stream, we can use the same approach as above to compute the control time. However, now we have to make some new considerations - specifically bandwidth limitation and delay jitter. It is possible for a multimedia data stream to require more bandwidth than is available. Thus for the single data stream we also consider bandwidth limitation and model it as some time delay as was indicated in section 3.4.

In multimedia communication, *delay jitter* refers to the variation in delays experienced by the packets making up a multimedia stream as they travel over a network. In terms of the presentation, this translates to the variation in the amount of delay experienced by the atomic data units (video frames or audio samples) before they become available for presentation. The allowable bounds on jitter is usually determined based on the limits of human perception. Table 1 shows some characteristic values. If the jitter is more than the allowable bounds, discontinuity will be noticed in the presentation.

QOS	Maximum Delay(s)	Maximum delay jitter (ms)	Average Throughput (Mbits/s)	Acceptable bit error rate	Acceptable packet error rate
Voice	0.25	10	0.064	$<10^{-1}$	$<10^{-1}$
Video (TV quality)	0.25	10	100	10^{-7}	10^{-7}
Compressed video	0.25	1	2-10	10^{-4}	10^{-4}
Data (file transfer)	1	-	2-100	0	0
Real-time data	0.001-1	-	<10	0	0
Image	1	-	2-10	10^{-4}	10^{-4}

Table 1. Multimedia streams: characteristic parameter values [10].

In the following, we assume a reliable and order-preserving network, and a probabilistic bound on network delays and packet loss. We also assume that there is some method for identifying the packets, their sources, and the order in which they were sent by the source - such as by just numbering them. We can then determine some appropriate delay that can be introduced to smoothen delay jitters before presentation. Ravindran and Bansal [17] used the notion of *diversity vector* to derive the maximum delays and delay variations a packet within a data frame may experience and still be acceptable to the application. Using the same approach, however in the context of an atomic data unit and the more usual notion of jitter bounds, it can be shown that, to compensate adequately for jitter, the following conditions must hold:

$$\left|\frac{dD}{dt}\right|_{max} \leq \frac{2.r.J_{max}}{N(N+1)} \quad \text{and} \quad D_{max} \leq J_{max}/N,$$

where J_{max} = maximum jitter bound, r = rate of packet generation at the source, N=number of packets per atomic data unit, D=packet delay in the channel, D_{max} = maximum acceptable packet delay. Thus with knowledge of the acceptable jitter bounds, we can determine the bounds on delays which can be imposed to smoothen the synchronization difficulties arising from delay jitter.

Control Time for Multiple Data Streams. When we have multiple data streams - as is the case in a typical multimedia presentation, an additional concern is the *skew* between the various streams. Skew is the difference between the actual presentation times of the various data streams that make up a given multimedia object. Unlike jitter which refers to only a single stream, skew is mainly noticed on an aggregate of multimedia streams and thus involves inter-stream synchronization. Skew can result from a number of factors, such as variation in delays experienced by different streams in the network, delays at the end systems, loss of data, clock variation between the source and destination machines, low quality of service specification, etc. Like jitter, skew is also quantified in terms of skew bounds acceptable for an application based on the limits of human perception. Then it is also possible to determine appropriate delays to compensate for skew based on the allowable skew bounds between the multimedia streams. Thus, in requesting for

fuboTV Media Inc.
Exhibit 1015
Page 284

the objects, we incorporate some delay to smoothen out the media streams that may have experienced some skew before reaching the presentation site.

The delays introduced above are statistical and bounded. Thus, they can vary from a minimum to a maximum value as shown below:

End-to-end delay, $\{D_E: D_{Emin} \leq D_E \leq D_{Emax}\}$
Bandwidth limitation $\{D_B: D_{Bmin} \leq D_B \leq D_{Bmax}\}$
Jitter compensation $\{D_J: D_{Jmin} \leq D_J \leq D_{Jmax}\}$
Skew compensation $\{D_S: D_{Smin} \leq D_S \leq D_{Smax}\}$

Then to ensure that the retrieval is requested at a time that always guarantees smooth presentation, we determine the control time, T_c using the worst case delays. Thus, $T_c = D_{Emax} + D_{Bmax} + D_{Jmax} + D_{Smax}$. The retrieval schedule for the presentation can then be calculated as: $\forall i$, $R_i = P_i - T_c$, where i is the ith multimedia object, R_i is the retrieval schedule (request time) for the ith object, and P_i is the actual presentation time for the ith object, computed from the presentation schedule.

3.6 Buffer requirement

The control time computed in the previous section can be said to be pessimistic since it uses only the maximum delays. This is premised on the worst case situation and thus will guarantee that the presentation schedule is always met. However, since communication networks are not deterministic, some data units may experience less than the predicted maximum delays and thus will reach the destination before their actual presentation time. Such data units will then need to be buffered until their presentation schedule is reached. The amount of buffer required at any time will depend on the number of data units that are *waiting* to be presented having arrived ahead of their presentation schedule.

To compute the buffer requirements, we consider two extremes - under maximum delays and in the case of minimum delays. Obviously, the minimum waiting time W_{Tmin}, and thus minimum buffer requirement will occur when all the data units experience maximum delays. That is, $W_{Tmin} = T_c - (D_{Emax} + D_{Bmax} + D_{jmax} + D_{Smax}) = 0$. Then there will be no need for a buffer. This is idealistic and does not really happen in practice. Conversely, the maximum waiting time W_{Tmax}, will be experienced when all the data units arrive with minimum delays. Thus, $W_{Tmax} = T_c - (D_{Emin} + D_{Bmin} + D_{Jmin} + D_{smin})$. Then, the maximum buffer needed will be $B_{Rmax} = W_{Tma}/T$, where T is the atomic interval of the multimedia stream. For multiple streams, T will be the atomic interval of the stream with the smallest atomic interval.

The B_{Rmax} represents the maximum amount of buffer that need to be allocated to avoid discontinuities in the presentation. We can also determine the actual dynamic buffer requirement at any time during the presentation since the data objects may experience a varying amount of delay over the network. This can be done using information on the bounds on network delay, current position in the presentation schedule, the multimedia objects that have been requested but not yet received, and the ones that have arrived, but not yet presented.

4 User interaction

The synchronization mechanisms provide the capability for modifying the amount of consumed resources for each place in the net. This ability is central to the support of special user interaction. Transitions in the net are instantaneous, thus user interaction can only occur when the state of the Petri net execution is in a place. Whenever a request for special user interaction is encountered, the Petri net execution is paused and the state of the presentation is recorded, including the consumption parameter for the objects, τ^b_p. In general, the duration of special user interaction only affects the time instants at which the multimedia object is presented and not their time intervals. Similarly, the modification of the presentation interval of a given object does not necessarily affect the presentation interval of the other objects, but only their presentation deadlines which can easily be calculated.

We classify the synchronization problems due to user interaction into two major types namely, synchronization problems due to special effects and synchronization difficulties arising from user modification of the presentation sequence.

4.1 Synchronization for special effects

Here we are concerned with the synchronization requirements when a user requests for certain special operations such as *skip, pause, resume, reverse*, etc. as may be needed in continuous media presentation. As was indicated earlier, the buffer required by the synchronization mechanisms is used only to compensate for data items that will experience less than the predicted maximum delays, and thus arrive at the presentation site before their presentation deadlines. This means that when a request for some special effect such as reverse is made, some multimedia objects may have to be requested again from their remote sites, depending on the extent of the reverse operation. This will obviously lead to some unnecessary delays during special effect operations. To avoid this problem, we suggest the use of local secondary storage to temporarily keep the retrieved objects after they have been presented. The availability of adequate secondary storage is not a necessity for our mechanisms, but we assume that such is available in the discussions for special interaction.

Pause/resume operation. This is obviously the simplest of the special operations. Whenever a *pause* request is made, we record the state of the presentation and then stop further requests for retrieval of subsequent

fuboTV Media Inc.
Exhibit 1015
Page 285

objects. Then at the time a *resume* is requested, we record the amount of time that the presentation was paused, and then restart the presentation from where it was stopped. Using the knowledge of the last retrieval request that was made prior to the *pause* operation, and the amount of time that the presentation was paused, we readjust the presentation time of subsequent objects and thus determine a new control time for the next retrieval. Since the buffer was not cleared, the user may not notice any discontinuities in pause/resume operations.

Fast reverse and fast forward operations. The fast forward operation is very similar to the fast reverse operation, only that the directions are opposite. We use similar approaches to support both operations and thus we describe only the fast reverse operation. The fast forward or fast reverse operation can be specified in terms of a temporal skip specified by the user. e.g. "go back to what was presented 4 minutes ago". The appropriate τ^b_p for each place involved in the special operation can easily be computed based on the specified temporal skip.

When a user request for a (fast[1]) reverse operation, as in any other special interaction, the state of the net execution will be at a place since our transitions are instantaneous. Assume the Petri net execution is at place p_c at the moment the request for reverse was issued, and that the reverse is just on the objects currently being presented. First, we determine the new τ^b_p for p_c and for all the objects that are in a parallel relation with it. This is done by computing the new position within the presentation intervals of the objects from where the presentation is to be resumed. Then let t_{pc} be the input transition to p_c (i.e. $p_c \in O_p(t_{pc})$). Then for all the input places to t_{pc}, reset their τ^b_p to τ_p. Also modify as necessary, the τ^b_p for the input places to the input transition for the places that are presented together with the object represented by p_c, i.e. those with which it shares a parallel relation (i.e. *overlaps*, *equals*, *during*, *starts* or *finishes*). This fires the transition t_{pc} (and also the input transitions to the other objects in a parallel relation with it) and thus restarts the consumption of the object. Upon restarting, the consumption (presentation) of objects is advanced to the new values of τ^b_p. (Thus the presentation for special effect may start mid-way into the presentation interval of the objects). If the reverse operation involves objects that are further behind p_c in the presentation graph, the presentation graph is traversed in a backward fashion until the target object is reached. At the target, say p_T, the above procedure is carried out using the target object as the current place in the Petri net execution. However, for each intermediate transition between p_T and p_c, the τ^b_p for its input places are set to zero, indicating that the object represented in such places can still be consumed.

4.2 User modification of the presentation sequence

A major problem arises when the user wishes to branch out of the current presentation sequence to view information represented under other topics in the presentation, thus effectively modifying the presentation graph. To approach this problem, we use the hierarchical modelling capability of the Petri net representation. A place in our presentation graph can be another timed Petri net. Thus there is a *global presentation graph* which is made up of subnets of smaller presentation graphs. Branching to a different presentation graph is then analogous to following a hypermedia link and users can elect to branch to any part of the global presentation graph or to follow the presentation schedule as pre-defined in the current presentation graph. The entry point into a branch is represented as a hypermedia node with a *link* to the desired presentation. Thus for the node where there is a branch, the object represented by the Petri net place at that node is just a hypermedia *button* indicating a branch to a different presentation.

At each point where there is a branch, we incorporate a special node which is in a parallel relation[2] with the object that the branch presentation is related to. Before the branch presentation is chosen (or if it is not chosen at all), the special node appears only as a hypermedia button, with a presentation interval determined by that of its related object, and the specific type of parallel relation. This implies that if the branch is not chosen, the user may not be forced to view the presentation represented in the subnet, and that the special node cannot cause other places in the net to wait for synchronization. Figure 4 shows a special node being replaced with a sub net. The special node p_s is in an *equals* relation with its parent node, p_k, hence its presentation interval is the same as that of p_k.

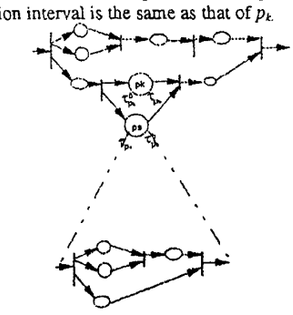

Figure 4. Replacement of a node with a subnet

[1] We treat forward/fast forward and reverse/fast reverse as being synonymous since one can be converted to the other by a scale factor.

[2] A special node is not allowed to be in an *overlaps* parallel relation with its parent node.

fuboTV Media Inc.
Exhibit 1015
Page 286

When a user branches to another presentation, the subnet representing the new presentation is instantiated as the current presentation graph. New presentation deadlines are computed, and the necessary multimedia objects are requested from the remote sites. When the requested objects arrive, the presentation restarts by starting the Petri net execution of the subnet and presentation continues in the usual manner as if there had been no branch. After the last resource in the subnet is consumed, the presentation reverts back to the parent net. Continuation on the former presentation graph is achieved using its pre-recorded state- in a manner akin to a pause/resume operation. With the above mechanisms, a sub net (different presentation) can be incorporated at any node and the level of hierarchy depends on the requirements of the presentation.

5. Concluding remarks

The proposed predictive synchronization mechanisms can be implemented as a special multimedia *synchronization manager* to be placed at the presentation site. The synchronization manager will be provided with some information such as the presentation schedule and presentation graphs, delay bounds, and the desired presenation time. The ordinary clock from the machine that is performing the presentation is all that is needed for this purpose. We do not need elaborate clock synchronization between the distributed sites.

Unlike some proposed low level protocols, here we opt for higher level support for multimedia synchronization. However, our mechanisms go further than mere programming constructs and synchronization specification by providing ways to guarantee that the specified synchronization requirements are met. They provide these guarantees without the need for clock synchronization between multiple sites. The mechanisms put control of the presentation at the presentation site itself rather than at the media sources. The control time accounts for possible delays that may be experienced by the request messages, inter-stream skew and intra-stream delay jitter and thus guarantees both meeting of presentation deadlines and a smooth presentation.

The mechanisms described can be very useful when presentations involve stored continuous media, with the media objects being retrieved from various distributed sources over a communication network with limited bandwidth, and when dynamic user participation is to be supported. Petri nets being automata [15], coupled with the added modelling power provided by the time parameters in our presentation graph, the synchronization mechanisms presented in this paper can also be very useful for synchronization in automatic multimedia presentation environments.

References

[1] Allen, J. F. (1983). Maintaining Knowledge about Temporal Intervals. *Commun. ACM, 26*, 11, 832-843.

[2] Blakowski, G., Hubel, J., Lanhrehr, U. and Muhlhauser, M. (1992). Tools Support for the Synchronization and Presentation of Distributed Multimedia. *Comput. Commun.*, 15, 10, 611-619.

[3] Coolahan, J. E. and Roussopoulos, N. (1983). Timing Requirements for Time-Driven Systems Using Augmented Petri Nets. *IEEE Trans. Softw. Eng.*, SE-9, 603-616.

[4] Cruz, R.L. (1991a). A Calculus for Network Delay, Part I: Network Elements in Isolation. *IEEE Trans. Inf. Theory*, 37: 114-131.

[5] Cruz, R.L. (1991b). A Calculus for Network Delay, Part II: Network Analysis. *IEEE Trans. Inf. Theory*, 37: 133-141.

[6] Diaz, M. and Senac, P. (1993). Time Stream Petri Nets: A Model for Multimedia Streams Synchronization. In, T-S. Chua and T. L. Kunii, (eds.) *Multimedia Modeling: Proc., 1st Int'l Conf. on Multi-Media Modeling*, 257-273.

[7] Danenberg R. B. and Rubine, D. (1994). A Comparison of Stream and Time Advance as Paradigms for Multimedia Systems. Internal Report, School of Computer Science, Carnegie Mellon University, Pittsburgh, Philadelphia.

[8] Fe arri, D. and Verma, D.C. (1990). A Scheme for Real-Time Channel Establishment in Wide-Area Networks. . *IEEE J. Sel. Areas Commun.*, 8, 3, 368-379.

[9]Goyal P., Lam, S.S., amd Vin, H.M. (1994). Determining End-to-End Delay Bounds in Heterogeneous Networks, Tech. Report, Computer Science Dept., The University of Texas at Austin, Texas.

[10]Hehmann, D. B., Salmony, M. G., and Stuttgen, H. J. (1990). Transport Services for Multimedia Applications on Broadband Networks. *Comput. Commun.*, 13, 4, 197-203.

[11]Little, T. D. C. and Ghafoor, A. (1991). Multimedia Synchronization Protocols for Broadband Integrated Services. *IEEE J. Sel. Areas Commun.*, 9, 1368-1382.

[12]Little, T. D. C. and Ghafoor, A. (1993). Interval-Based Conceptual Models for Time Dependent Data. *IEEE Trans. Knowl. Data Eng.*, 5, 4, 551-563.

[13]Murata, T. (1979). Petri Nets: Properties, Analysis and Applications. *Proc. IEEE*, 77, 4, 541-581.

[14]Nicolaou, C. (1990). An Architecture for Real-Time Multimedia Communication Systems. *IEEE J. Sel. Areas Commun.*, 8, 3, 391-400.

[15]Peterson, J. L. (1977). Petri Nets. *Comput. Surv.*, 9, 3, 221-252.

[16]Prabhakaran, B. and Raghavan, S. V. (1994). Synchronization Models for Multimedia Presentation with User Participation. *Multimedia Systems*, 2, 53-62.

[17]Ravindran, K. and Bansal, V. (1993). Delay Compensation Protocols for Synchronization of Multimedia Data Streams. *IEEE Trans. Knowl. Data Eng.*, 5, 4, 574-589.

[18]Ramanathan, S. and Rangan, V. P. (1993). Feedback Techniques for Intra-Media Continuity and Inter-Media Synchronization in Distributed Multimedia Systems. *Comput. J.*, 36, 1, 19-31.

[19]Steinmetz, R. (1990), Synchronization Properties in Multimedia Systems. *IEEE J. Sel. Areas Commun.*, 8, 3, 401-412.

Acknowledgement

This work was supported by The Chinese University of Hong Kong Postgraduate Students Grant.

fuboTV Media Inc.
Exhibit 1015
Page 287

BEST COPY

UNITED STATES DEPARTMENT OF COMMERCE
Patent and Trademark Office

NOTICE OF ALLOWANCE AND ISSUE FEE DUE

09/052,862 IM12/0620
SHERIDAN ROSS PC
1560 BROADWAY
SUITE 1200
DENVER CO 80202

APPLICATION NO.	FILING DATE	TOTAL CLAIMS	EXAMINER AND GROUP ART UNIT		DATE MAILED
09/052,862	03/31/98	040	ROMERO, A	2756	06/20/00

First Named Applicant: OGDON, 35 USC 154(b) term ext. = 0 Days.

TITLE OF INVENTION: METHOD AND SYSTEM FOR PROVIDING A PRESENTATION ON A NETWORK

ATTY'S DOCKET NO.	CLASS-SUBCLASS	BATCH NO.	APPLN. TYPE	SMALL ENTITY	FEE DUE	DATE DUE
0 3654-1	709-224.000	032	UTILITY	YES	$605.00	09/20/00

THE APPLICATION IDENTIFIED ABOVE HAS BEEN EXAMINED AND IS ALLOWED FOR ISSUANCE AS A PATENT. PROSECUTION ON THE MERITS IS CLOSED.

THE ISSUE FEE MUST BE PAID WITHIN THREE MONTHS FROM THE MAILING DATE OF THIS NOTICE OR THIS APPLICATION SHALL BE REGARDED AS ABANDONED. THIS STATUTORY PERIOD CANNOT BE EXTENDED.

HOW TO RESPOND TO THIS NOTICE:

Review the SMALL ENTITY status shown above.
If the SMALL ENTITY is shown as YES, verify your current SMALL ENTITY status:

A. If the status is changed, pay twice the amount of the FEE DUE shown above and notify the Patent and Trademark Office of the change in status, or
B. If the status is the same, pay the FEE DUE shown above.

If the SMALL ENTITY is shown as NO:

A. Pay FEE DUE shown above, or

B. File verified statement of Small Entity Status before, or with, payment of 1/2 the FEE DUE shown above.

Part B-Issue Fee Transmittal should be completed and returned to the Patent and Trademark Office (PTO) with your ISSUE FEE. Even if the ISSUE FEE has already been paid by charge to deposit account, Part B Issue Fee Transmittal should be completed and returned. If you are charging the ISSUE FEE to your deposit account, section "4b" of Part B-Issue Fee Transmittal should be completed and an extra copy of the form should be submitted.

. All communications regarding this application must give application number and batch number.
Please direct all communications prior to issuance to Box ISSUE FEE unless advised to the contrary.

IMPORTANT REMINDER: Utility patents issuing on applications filed on or after Dec. 12, 1980 may require payment of maintenance fees. It is patentee's responsibility to ensure timely payment of maintenance fees when due.

PATENT AND TRADEMARK OFFICE COPY

FROM (TUE) 07. 18' 00 15:04/ST. 15:03/NO. 3561892732 P 1

SHERIDAN ROSS

A Professional Corporation

ATTORNEYS AND COUNSELORS AT LAW

1560 BROADWAY
SUITE 1200
DENVER, COLORADO 80202-5141

TELEPHONE (303) 863-9700
FACSIMILE (303) 863-0223
E-MAIL srlaw@sheridanross.com

DAVID F. ZINGER
CRAIG C. GROSETH
MICHAEL L. TOMPKINS
TODD F. BLAKELY
GARY J. CONNELL
SABRINA C. STAVISH
JOSEPH E. KOVARIK
SUSAN PRYOR WILLSON
LEWIS D. HANSEN
ROBERT R. BRUNELLI
DOUGLAS W. SWARTZ
RICHARD L. HUGHES
BRUCE A. KUGLER
DANA HARTIE CARDWELL
PAUL S. HANSKA
DON D. CHA, Ph.D.
BENJAMIN B. LIEB
BRADLEY M. KNEPPER
JOHN C. SCOTT
MIRIAM R. DRICKMAN

PATENTS
TRADEMARKS
COPYRIGHTS

KERMITH F. ROSS
1910 - 1986

OF COUNSEL
PHILIP H. SHERIDAN
WANNELL M. CROOK
GILBERT E. ALBERDINO*
THERESA A. BROWN

*MI, AL, IN Bar Only

TECHNICAL SPECIALISTS
DENNIS J. DUPRAY, Ph.D.
ANGELA DALLAS-PEDRETTI, Ph.D

FACSIMILE COVER SHEET

Time: 4:00 pm Date: 7-18-2000

Please deliver the following page(s) to:

Name: A. Romero Art Group: 2756

Facsimile No. (703) 305-9731

Our File No. ~~364~~ 3654-1

Your File No. Patent Application Serial No.: 09/052,862

Total No. Pgs., incl. cover 18

SPECIAL INSTRUCTIONS: Draft of 312(a) amendment.

Sender's Name: Dennis Dupray

Original Documents _____ Will _____ Will Not Follow by mail

If you do not receive all the pages, please call _____ At (303) 863-9700.

THIS FACSIMILE MESSAGE IS CONFIDENTIAL AND MAY CONTAIN ATTORNEY PRIVILEGED INFORMATION INTENDED ONLY FOR THE USE OF THE INDIVIDUAL OR COMPANY NAMED ABOVE. If the reader is not the intended recipient, or the employee or agent responsible to deliver it to the intended recipient, you are hereby notified that any dissemination, distribution or copying of this communication is strictly prohibited. If you have received this communication in error, please immediately notify us by telephone, so that we may arrange for the return of the original message to us. Thank you.

DRAFT

IN THE UNITED STATES PATENT AND TRADEMARK OFFICE

In Re the Application of:	Group Art Unit: 2756
JOHNSON and OGDON (as per Filing Receipt Correction)	Examiner: A. Romero
	Issue Batch No.: O32
OGDON and JOHNSON (as identified in PTO Transmittals)	37 C.F.R. 1.312(A) AMENDMENT
Serial No.: 09/052,862	CERTIFICATE OF MAILING I hereby certify that this correspondence is being deposited with the United States Postal Service as First Class Mail in an envelope addressed to Commissioner of Patents and Trademarks, Washington, D.C. 20231 on July 18, 2000. SHERIDAN ROSS P.C. BY: _____ Chasity C. Rossum
Filed: March 31, 1998	
Atty. File No.: 3654-1	
For: "METHOD AND SYSTEM FOR PROVIDING A PRESENTATION ON A NETWORK"	

Assistant Commissioner for Patents
Washington, D.C. 20231

Dear Sir:

Persuant to 37 CFR 1.312(a), please amend the above-identified application as follows:

IN THE SPECIFICATION.

Please insert the following paragraph as the first paragraph of the specification:

-- The present application claims the benefit of U.S. Provisional Application No. 06/041,770, filed March 31, 1997. --

IN THE CLAIMS:

62. (Amended) A system as claimed in Claim 57, wherein (a) and (b) following:

(a) said first subcollection includes video with motion, and said second subcollection includes video with one of: (i) reduced motion, and (ii) no motion, and

DRAFT

(b) said first subcollection is presented to the first user at said first client node simultaneously with said second subcollection being presented to a second user at a second client node.

71. (Amended) A network presentation distribution system as claimed in Claim 57, further including a leader node that is accessed by a leader for controlling a performance of said presentation, wherein the leader directs a pace and content of the presentation performance [provided to said client nodes]via said presentation controlling network node that synchronizes a performance of said presentation on said first client node with a performance of said presentation on a second client node so that a particular one or more of said segments are presented on said first client node synchronously with an alternative one or more segments [being] output by one of said content supplying nodes to said second client node, wherein said alternative one or more segments correspond in content to said particular one or more segments.

72. (Amended) A network presentation distribution system for presenting a presentation, comprising:

a first and second presentation content supplying nodes of a communications network, said first and second content supplying nodes for providing access to one or more collections of data segments of said presentation using said communications network;

a presentation controlling node for transmitting to at least a first client node, presentation control information used for identifying a first subcollection of said segments for presentation to a user at said first client node; and

a content node selector, activated after said first client node receives said presentation control information, said content node selector for selecting one of said first and second content supplying nodes for transmitting one of: (a) said first subcollection to said first client node using said communications network; and (b) an alternative subcollection of one or more

DRAFT

of said segments predetermined as a replacement for said first subcollection for presenting at said first node;

wherein said first client node transmits a presentation request to a selected one of said first and second content supplying nodes, said presentation request including at least one of (a), (b) and (c) following: (a) an identification of a version of said presentation, said version for a predetermined group of presentation audience members, (b) an identification of one of said first and [second]said alternative subcollections identified in a predetermined script for said presentation; and (c) information for identifying an alternative segment determined by a leader of a performance of said presentation, wherein said alternative segment is not identified in said script.

74. (Amended) A network presentation distribution system for presenting a presentation, comprising:

one or more content supplying network nodes able to provide a plurality of segments to a first client node of a plurality of network client nodes, via a communications network, wherein each of said segments provides a portion of a particular presentation;

a presentation controlling network node for transmitting presentation control information providing identities of segments in a collection of said segments when the presentation is performed at said first client node;

a presentation network component at said first client node, wherein, after receiving said presentation control information, said presentation network component transmits segment selection information, obtained using said presentation control information, to a first of said content supplying nodes for [obtaining] requesting the collection [at] by said first client node;

a segment selector that uses one of: (a) the presentation control information, and (b) the segment selection information for identifying a first collection of said segments to transmit from the first content supplying node to the first client node;

fuboTV Media Inc.
Exhibit 1015
Page 292

DRAFT

wherein said presentation controlling network node synchronizes a performance of said presentation on said first client node with a performance of said presentation on a second client node so that a particular one or more of said segments are presented on said first client node synchronously with a presentation of an alternative one or more segments [being]output by one of said content supplying nodes to said second client node, wherein said alternative one or more segments correspond in content to said particular one or more segments.

75. (Amended) A network presentation distribution system as claimed in Claim 74, wherein said segment selection information depends on a data transmission characteristic of a transmission to the first client node from one of the content supplying nodes;

wherein said data transmission characteristic is dependent on one of a network data transmission rate and a measurement of network data transmission errors; and

wherein said data transmission characteristic is expected to be indicative of a current transmission rate to the first client node from the one content supplying node.

76. (Twice Amended) A method for presenting a networked presentation, comprising:

storing a plurality of segments of a presentation for network access via one or more content supplying nodes of a communications network, wherein there are subcollections of one or more of the segments, each subcollection having a predetermined presentation order and there is a first and a second of the subcollections, wherein said first subcollection is replaceable with said second subcollection when presenting the presentation;

[first] identifying a plurality of network client nodes for presenting the presentation;

transmitting, via the communications network, presentation control information to a first and second of the client nodes;

DRAFT

first identifying said first subcollection for presenting at the first client node using said transmitted presentation control information;

second identifying said second subcollection for presenting at the second [user] client node in place of the first subcollection, using said transmitted presentation control information;

first retrieving said first subcollection from said content supplying nodes for presenting at the first client node;

second retrieving said second subcollection from said content supplying nodes for presenting at the second client node substantially simultaneously with the presenting of the first subcollection at the first client node.

78. (Amended) A method as claimed in Claim 77, further including a step of synchronously presenting the presentation at the first client node with presenting the presentation at the second client node so that each of the subcollections presented at the first client node is presented substantially simultaneously with some one of the [second]subcollections at the second client node.

79. (Amended) A method as claimed in Claim 78, wherein said step of [synchronizing]synchronously presenting includes obtaining, by said first client node, a network performance measurement of a network transmission from a first of the content supplying network nodes to the first client node.

82. (Amended) The method as claimed in Claim 76, wherein said step of first identifying occurs prior to said step of first retrieving and said step of first identifying includes:

obtaining one or more measurements related to an expected time for transmitting said first subcollection to the first client node via the communications network;

DRAFT

wherein said one or more measurements are indicative of one or more of:

(a) a size of said first subcollection;

(b) a bandwidth of previous transmissions via the communications network to the first client node;

(c) an overhead indicative of a protocol used in transmissions via the communication network to the first client node;

(d) an allotted time for said first client to receive said first subcollection;

(e) a fluctuation in bandwidth of the communications network;

(f) an error rate [for the first client node]from the communications network;

(g) a predictive statistical expectation of a bandwidth on the communications network.

84. (Amended) The method as claimed in Claim 83, further including determining said desired time by [comparing]determining one or more of:

(a) a measurement related to the performance of the presentation at said second client node[that receives];

(b) a predetermined length of time; and

(c) a length of time determined by a leader for the presentation.

85. (Amended) The method as claimed in Claim 83, further including determining said desired time by comparing: (a) a transmission rate of the communications network between the first client node and at least one of said content supplying nodes; and (b) a transmission rate of the communications network between said second client node, and at [last]least one of said content supplying nodes.

86. (Twice Amended) A method for presenting a networked presentation, comprising:

DRAFT

storing a plurality of segments for a presentation, wherein said segments are network accessible from one or more content supplying network nodes for presenting the presentation, and wherein for a first subcollection of one or more of the segments, said first subcollection is capable of being accessed from a first of the content supplying nodes, and at least one of (a) and (b):

(a) said first subcollection has a corresponding different second subcollection of one or more of said segments that has been identified as a replacement for the first subcollection, and

(b) said first subcollection is capable of being accessed from a second of said content supplying nodes;

providing for a first client node [made with], a network transmission of the presentation, wherein the first client node has network access to at least one of: the first and second subcollections, and the first and second content supplying nodes;

determining, for the first client node, a measurement indicative of an expected network performance of a communications network for transmitting the first subcollection from the first content supplying node to the first client node;

selecting at least one of: the second subcollection and the second content supplying node when said measurement is indicative of an undesirable performance of the [performance of the] presentation at the first client node.

89. (Amended) A method of presenting a multimedia presentation comprising:

storing a script of one or more presentation commands for performing multimedia segments of said presentation wherein a first of said one or more commands references one or more unresolved identifiers of one or more [network] content supplying nodes providing access to at least a video portion of a first subcollection of one or more of said segments via a communications network;

DRAFT

storing a communications network identifier for each of one or more of said content supplying nodes providing network access to at least said video portion of said first subcollection;

identifying one or more client nodes for receiving a performance of said presentation;

resolving said unresolved identifiers of a first of said commands using said stored communications network identifiers for said one or more content supplying nodes, thereby obtaining a resolved command;

performing said resolved command at each of said client nodes during said performance by requesting said at least video portion of said first subcollection from [said]a first of said content supplying nodes;

requesting by a first of said client nodes, when said at least video portion of said first subcollection is not received by said first client node within a predetermined time, one of: (a) at least a video portion of an alternative subcollection of one or more of said segments, in place of said at least video portion of said first subcollection, from one of said content supplying nodes, and (b) said at least video portion of said first subcollection from an alternate one of said content supplying nodes.

91. (Amended) A network presentation distribution system for presenting a presentation, comprising:

one or more presentation content supplying nodes of a communications network, said content supplying nodes for providing access to a collection of data segments of said presentation using said communications network, wherein said collection includes first and second subcollections of one or more of said segments;

a presentation controlling node for transmitting to at least a first client node, via the communications network, presentation control information used for identifying a group of subcollections of said segments, said group including said first and second subcollections; and

DRAFT

a first segment selector, activated in response to said first client node receiving said presentation control information, for selecting one of said first and second subcollections for transmitting said selected subcollection from one of said presentation content supplying nodes to said first client node;

wherein said first segment selector includes a comparator for comparing (a) and (b) following: (a) a value indicative of a length of time expected [to receive]for said first client node to receive one of said first and second subcollections, and (b) a value indicative of one of: (i) a length of time related to one or more other client nodes receiving one or more subcollections of said collection, (ii) a predetermined default length of time, and (iii) a length of time determined by a leader of said presentation performance.

93. (Amended) A network presentation distribution system for presenting a presentation, comprising:

a first and second presentation content supplying nodes of a communications network, said first and second content supplying nodes for providing access to one or more collections of data segments of said presentation using said communications network;

a presentation controlling node for transmitting to at least a first client node, presentation control information used for identifying a first subcollection of said data segments for [presentation]presenting at said first client node;

a content node selector, activated in response to said first client node receiving said presentation control information, for selecting one of said first and second content supplying nodes for transmitting one of: (a) said first subcollection to said first client node using said communications network; and (b) an alternative subcollection of one or more of said segments predetermined as a replacement for said first subcollection; and

a phone bridge controller for routing presentation related audio communications to a client site having said first client node, via one or more phone bridges, wherein a telephone at said client site transforms the presentation related audio communications into an audible

fuboTV Media Inc.
Exhibit 1015
Page 298

DRAFT

communication having natural language speech included therein.

95. (Amended) A network presentation distribution system for presenting a presentation, comprising:

a first and second presentation content supplying nodes of a communications network, said first and second content supplying nodes for providing access to one or more collections of data segments of said presentation using said communications network;

a presentation controlling node for transmitting, via the communications network, to at least a first client node, presentation control information used for identifying a first subcollection of said segments for presentation at said first client node;

a content node selector, activated in response to said first client node receiving said presentation control information, for selecting one of said first and second content supplying nodes for transmitting one of: (a) said first subcollection to said first client node using said communications network; and (b) an alternative subcollection of one or more of said segments predetermined as a replacement for said first subcollection;

wherein said presentation controlling node includes a presentation script processing component for generating presentation performance commands from a script for said presentation, wherein for said first client node, said generated commands synchronize a display of a video content of said segments with a performance of a related presentation audio content; and

wherein said presentation controlling node includes a phone bridge controller for directing a phone bridge to provide audio communications between a client site having said first client node and [one of: said presentation controlling node and] a leader of a performance of said presentation, wherein said phone bridge routes presentation performance related audio information differently from network communications between said presentation controlling node and first client node via said communications network.

fuboTV Media Inc.
Exhibit 1015
Page 299

DRAFT

96. (Amended) A network presentation distribution system for presenting a presentation on a communications network having unexpected network performance fluctuations at a user node, comprising:

one or more presentation content supplying nodes of a communications network, said content supplying nodes for providing access, [by a user]at the user node [of]via the communications network, to a collection of data segments of said presentation using said communications network, wherein said collection includes first and second subcollections of one or more of said segments;

a computational component for determining network performance information of the communications network, wherein said computational component determines said network performance information using network data obtained from network transmissions detected at said user node;

a segment selector, activated during the presentation for selecting, using said network performance information, one of said first and second subcollections for transmitting from one of said presentation content supplying nodes to said user node; and

a presentation component at said user node for presenting said selected one of said first and second subcollections to [the]a user at the user node.

97. (New) The network presentation distribution system as claimed in Claim 74, wherein a performance of said particular one or more segments on said first client node includes video with motion, and a performance of said alternative one or more segments on said second client node includes video with one of: (i) reduced motion, and (ii) no motion.

98. (New) The method of Claim 89, further including a step of controlling said performance of said presentation via a leader node receiving input from a leader for said performance of said presentation, wherein the leader directs a pace and content of the presentation performance via a presentation controlling network node, wherein the

fuboTV Media Inc.
Exhibit 1015
Page 300

DRAFT

presentation controlling network node synchronizes said performance of said presentation on said first client node with a performance of said presentation on a second client node so that when one of said first and said alternative subcollection are presented on said first client node, there is a synchronized performance of a second subcollection of said segments on said second client node, wherein said first and second subcollections correspond in content.

99. (New) The network presentation distribution system of Claim 93, further including:

a cache at said first client node for caching, as a cached subcollection, said selected one of said first subcollection and said alternative subcollection;

wherein said cached subcollection is cached within a desired time prior to a performance of said cached subcollection, and wherein said desired time is determined using one or more of:

(a) a measurement related to the performance of the presentation at said second client node;

(b) a predetermined length of time; and

(c) a length of time determined by a leader for the presentation.

REMARKS.

The amendment to the specification is for claiming the benefit of the prior U.S. Provisional Patent Application. Note, that this prior provisional application is cited on the filing receipt for the present application. Further note that this amendment is needed for proper protection of the invention.

Regarding amendments to the claims and new claims, each claim amendment and new claim will be discussed hereinbelow. These amendments are needed to better clarify the claims, and to better protect what the Applicants consider as their invention. The three new dependent claims are believed necessary to more appropriately protect the invention from possible prior art that is

fuboTV Media Inc.
Exhibit 1015
Page 301

DRAFT

currently unknown but that may subsequently become known. Additionally, the Applicant's commercialization of the present invention is, as with many other Internet endeavors, time critical. Thus, timely issuance of the amended and new claims herein is important for the proper commercialization of the present invention. Moreover, the amendments herein were not presented earlier for the following reasons:

(a) Applicant's did not fully understand the claims, and have only recently begun to understand what the allowed claims cover; and

(b) There was a concern that if the claim amendments of the nature presented here were presented in response to the previous Office Action, then, at some future time, such amendments could be misinterpreted as necessary limitations on the patent protection for the present invention.

Additionally, the requested amendments and new claims herein are believed to require no additional search or examination in that it is believed the amendments and new claims: (a) do not introduce any new issues of patentability, and (b) do not depart from the patentable subject matter of the currently allowed claims.

Regarding amended Claims 62, and 71, these claims are dependent on allowed independent Claim 57, and accordingly, are believed to be patentable. Moreover, the amendments of these claims are believed to not affect the aspects of these claims that has been determined to be patentable subject matter. Thus, these claims are believed to remain allowable.

Regarding amended Claim 72, the amendments to this independent claim both correct and clarify the claim language so that the scope of the claim is better defined. For example, in line 19 of this claim hereinabove, the text appears to suggest that "second collection" has been previously recited. However, there is no such prior recitation. Thus, to cure this problem, the claim now refers to "said alternative" subcollection instead. Moreover, the amendments herein are believed to not affect the aspects of these claims that has been determined to be patentable subject matter. Thus, the claim, as amended, is believed to be allowable.

DRAFT

Regarding amended Claim 74, the amendments to this independent claim both correct and clarify the claim language so that the scope of the claim is better defined without deviating from the aspects of the claim that has been determined to constitute patentable subject matter. For example, the amendment of the last paragraph of this claim now describes the intended aspect of performing the presentation synchronously at both the first and second client nodes. Thus, the claim, as amended, is believed to be allowable.

Regarding Claim 75, the wording changes herein are believed to be clarifications that do not affect the patentability thereof. Thus, the claim, as amended, is believed to be allowable.

Regarding Claim 76, the wording changes herein are believed to be changes that do not affect the scope of the claim. Note that the deletion of the word "first" in line 7 of this claim hereinabove disambiguates dependent Claim 82 since this latter claim refers to "said first identifying" step and there are currently two such steps. Thus, the claim, as amended, is believed to be allowable.

Regarding Claim 78, the amendment to this dependent claim better defines the claim without departing from the patentable aspects in the allowed claims. In particular, the phrase "one of the second subcollection" has been changed to --some one of the subcollections-- to more clearly protect what Applicants consider as their invention. Thus, the claim, as amended, is believed to be allowable since it does not depart from allowed subject matter, and since this claim is dependent on allowable Claims 76 and 77.

Regarding Claim 79, the requested amendment clarifies the claim in that "said step of synchronizing" should more properly refer to "said step of synchronously presenting" as recited in Claim 78 upon which Claim 79 is dependent. Thus, the claim, as amended, is believed to be allowable.

Regarding Claim 82, the requested amendment better conforms to the specification. Moreover, wording similar to this amendment (i.e., "an error rate from the communications network", Claim 82 line14) is recited in Claim 75 (lines 5 and 6 of this Claim 75 hereinabove). Thus, since Claim 82, as amended, does not depart from what is believed to have been determined

fuboTV Media Inc.
Exhibit 1015
Page 303

DRAFT

to be patentable matter, and since this claim is additionally dependent upon allowable Claim 76, Claim 82 is believed to be allowable.

Regarding Claim 84, the requested amendment of this dependent claim better describes the patentable aspect of the invention for which Applicant's seek protection. Accordingly, it is believed this claim, as amended, is allowable at least due to its dependence on presumed allowable Claim 83.

Regarding Claim 85, a spelling error is corrected.

Regarding Claim 86, the requested amendment of this dependent claim corrects errors in the claim. In particular, the phrase "a first client made with" (line 12 of this claim hereinabove) was entered as a first amendment to the present claim, and is incorrect. Instead, the present replacement of "made with" by –node—is the correct amendment. Additionally, the duplicated phrase "performance of the" has been deleted. Accordingly, since these amendments do not depart from what has been determined to be patentable matter, it is believed that this claim is allowable.

Regarding Claim 89, the requested amendments better describe the patentable aspects of the invention for which Applicant's seek protection. Moreover, it is believed that amended Claim 89 does not depart from the aspects of the claim that have been determined to be patentable. Additionally, the addition of the term "at least said video portion of" as a modifier to "said first subcollection" in the present claim is similar to the term "one or more video portions of the multimedia presentation" used in (unamended) Claim 87. The other amendments to the present claim are for clarification. For example, the phrase "said first content supplying node" (lines 15 and 16 of Claim 89 hereinabove) is not previously recited in this independent claim, and accordingly the phrase has been changed to --a first of said content supplying nodes—to correct for the lack of such an antecedent basis. Thus, it is believed that the present claim, as amended, is allowable.

Regarding Claim 91, the requested amendments are believed to not broaden the scope of the claim except for the insertion of "one of" in lines 17 and 18 of this claim hereinabove. The insertion of "one of" is needed for proper protection of the invention in that the claim, as amended, properly describes how various embodiments of the invention are currently implemented and/or are likely to be implemented commercially. It is believed no additional search or examination is required since

fuboTV Media Inc.
Exhibit 1015
Page 304

DRAFT

this amendment does not depart from the patentable aspects of this claim which is believed to be the combination of:

(A) the presentation content supplying nodes,

(B) the presentation controlling node,

(C) the first segment selector,

(D) wherein the first segment selector includes a comparator for comparing:

(a) a value indicative of a length of time expected for a (first) client node to receive a (first or second) subcollection, and

(b) another length of time (i.e., *one of*:. (i) a length of time related to one or more other client nodes receiving one or more subcollections of said collection, (ii) a predetermined default length of time, and (iii) a length of time determined by a leader of said presentation performance).

Additionally, note that the above three options (i) through (iii) of Claim 91 are also substantially provided in Claim 84. Accordingly, it is believed that Claim 91 as amended is allowable.

Regarding Claim 93, the amendments herein clarify the claim language and it is believed they do not change the scope of the claim.

Regarding Claim 95, the amendments herein clarify the claim language and in fact *narrow* the scope of the claim. Thus, it is believed that Claim 95, as amended, is allowable.

Regarding Claim 96, the amendments herein clarify the claim and do not depart from what is believed to be the patentable aspects therein. Thus, it is believed that Claim 96, as amended, is allowable.

Regarding new Claim 97, this dependent claim is believed patentable at least due to the patentability of Claim 74 upon which it depends. Moreover, it is believed that no new matter is hereby claimed in that the content of Claim 97 is substantially the same as that of Claim 62.

Regarding new Claim 98 this dependent claim is believed patentable at least due to the patentability of Claim 89 upon which it depends. Moreover, it is believed that no new matter is

fuboTV Media Inc.
Exhibit 1015
Page 305

DRAFT

hereby claimed in that the content of Claim 98 is substantially the same as that of Claim 71.

Regarding new Claim 99, this dependent claim is believed patentable at least due to the patentability of Claim 89 upon which it depends. Moreover, it is believed that no new matter is hereby claimed in that the content of Claim 98 is substantially the same as the content of the combination of Claims 83 and 84.

Since all pending claims in the present application are believed to be in condition for allowance, Applicants respectfully request reconsideration of the present application for allowance of the above amended claims and new claims. Please debit deposit account 19-1970 for the three new dependent claims 97 – 99 added herein. No other fees are believed due with this amendment. However, in the event additional fees are due, please debit Deposit Account No. 19-1970.

Respectfully submitted,

SHERIDAN ROSS P.C.

By: _____

Dennis J. Dupray, Ph.D.
Registration No. 46,299
1560 Broadway, Suite 1200
Denver, Colorado 80202-5141
(303) 863-9700

Date: _____

m:\3654\-1\pro-312(a) Amendment Draft

fuboTV Media Inc.
Exhibit 1015
Page 306

FROM (WED) 07. 26' 00 13:52/ST. 13:51/NO. 3561683855 P 1

ENTER-312
ae 7/28/00

#18E
S. Bond
7/27/00

DAVID F. ZINGER
CRAIG C. GROSETH
MICHAEL L. TOMPKINS
TODD P. BLAKELY
GARY J. CONNELL
SABRINA C. STAVISH
JOSEPH E. KOVARIK
SUSAN FRYOR WILLSON
LEWIS D. HANSEN
ROBERT R. BRUNELLI
DOUGLAS W. SWARTZ
RICHARD L. HUGHES
BRUCE A. KUGLER
DANA L. HARTIE
PAUL S. HANSRA
DON D. CHA, Ph.D.
BENJAMIN B. LIEB
BRADLEY M. KNEPPER
JOHN C. SCOTT
MIRIAM R. DRUCKMAN

SHERIDAN ROSS
A Professional Corporation
ATTORNEYS AND COUNSELORS AT LAW

SEVENTEEN HUNDRED LINCOLN STREET
SUITE 3500
DENVER, COLORADO 80203-4501

TELEPHONE (303) 863-9700
FACSIMILE (303) 863-0223
E-MAIL sriser@sheridanross.com

PATENTS
TRADEMARKS
COPYRIGHTS

KERMITH F. ROSS
1910-1986

OF COUNSEL
PHILIP H. SHERIDAN
WANNELL M. CROOK
GILBERT E. ALBERDING*
THERESA A. BROWN

*MI, AL, IN Bar Only

TECHNICAL SPECIALISTS
DENNIS J. DUPRAY, Ph.D.
ANGELA DALLAS-PEDRETTI, Ph.D.

FACSIMILE COVER SHEET

July 26, 2000

Please deliver the following pages to:

OFFICIAL
RECEIVED
7/26/00

Name:	Examiner A. Romero of the U.S. Patent and Trademark Office
Group Art Unit:	2756
Facsimile No.	703-305-9731
Our File No.	3654-1
	Official 37 C.F.R. 1.312(a) Amendment
U.S. Patent Application Serial No.	09/052,862
Total No. Pgs., incl. cover	17
Sender's Name:	Dennis J. Dupray, Ph.D.
Special Instructions:	This amendment is in response to and consistent with the conference call with Examiners Romero and Rienhart on July 26, 2000. Please debit any outstanding fees for this amendment from Deposit Account 19-1970.

If you do not receive all pages, please call Chasity at 303-863-9700 Ext. 3027.

THIS FACSIMILE MESSAGE IS CONFIDENTIAL AND MAY CONTAIN ATTORNEY PRIVILEGED INFORMATION INTENDED ONLY FOR THE USE OF THE INDIVIDUAL OR COMPANY NAMED ABOVE. If the reader is not the intended recipient, or the employee or agent responsible to deliver it to the intended recipient, you are hereby notified that any dissemination, distribution or copying of this communication is strictly prohibited. If you have received this communication in error, please immediately notify us by telephone, so that we may arrange for the return of the original message to us. Thank you.

E

IN THE UNITED STATES PATENT AND TRADEMARK OFFICE

In Re the Application of:	Group Art Unit: 2756
JOHNSON and OGDON (as per Filing Receipt Correction)	Examiner: A. Romero
OGDON and JOHNSON (as identified in PTO Transmittals)	Issue Batch No.: O32
	37 C.F.R. 1.312(A) AMENDMENT
Serial No.: 09/052,862	
Filed: March 31, 1998	
Atty. File No.: 3654-1	
For: "METHOD AND SYSTEM FOR PROVIDING A PRESENTATION ON A NETWORK"	

CERTIFICATE OF FACSIMILE TRANSMISSION

I HEREBY CERTIFY THAT THIS CORRESPONDENCE IS BEING FACSIMILED TO EXAMINER A. ROMERO IN GROUP ART UNIT 2756 AT (703) 305-9731 OF THE UNITED STATES PATENT AND TRADEMARK OFFICE, WASHINGTON, DC 20231 ON July 26, 2000.

SHERIDAN ROSS P.C.

BY Chasity C. Rossum
Chasity C. Rossum

OFFICIAL

RECEIVED 7/26/00

Assistant Commissioner for Patents
Washington, D.C. 20231

Dear Sir:

Persuant to 37 CFR 1.312(a), please amend the above-identified application as follows:

IN THE SPECIFICATION.

Please insert the following paragraph as the first paragraph of the specification:

E1

--The present application claims the benefit of U.S. Provisional Application No. 06/041,770, filed March 31, 1997.--

IN THE CLAIMS:

E2

62. (Amended) A system as claimed in Claim 57, wherein (a) and (b) following:

(a) said first subcollection includes video with motion, and said second subcollection includes video with one of: (i) reduced motion, and (ii) no motion, and

(b) said first subcollection is presented to the first user at said first client node

100

E

simultaneously with said second subcollection being presented to a second user at a second client node.

E8

E3

15 ~~71~~. (Amended) A network presentation distribution system as claimed in Claim ~~57~~, further including a leader node that is accessed by a leader for controlling a performance of said presentation, wherein the leader directs a pace and content of the presentation performance [provided to said client nodes]via said presentation controlling network node that synchronizes a performance of said presentation on said first client node with a performance of said presentation on a second client node so that a particular one or more of said segments are presented on said first client node synchronously with an alternative one or more segments [being] output by one of said content supplying nodes to said second client node, wherein said alternative one or more segments correspond in content to said particular one or more segments.

16 ~~72~~. (Amended) A network presentation distribution system for presenting a presentation, comprising:

a first and second presentation content supplying nodes of a communications network, said first and second content supplying nodes for providing access to one or more collections of data segments of said presentation using said communications network;

a presentation controlling node for transmitting to at least a first client node, presentation control information used for identifying a first subcollection of said segments for presentation to a user at said first client node; and

a content node selector, activated after said first client node receives said presentation control information, said content node selector for selecting one of said first and second content supplying nodes for transmitting one of: (a) said first subcollection to said first client node using said communications network; and (b) an alternative subcollection of one or more of said segments predetermined as a replacement for said first subcollection for presenting at said first node;

fuboTV Media Inc.
Exhibit 1015
Page 309

wherein said first client node transmits a presentation request to a selected one of said first and second content supplying nodes, said presentation request including at least one of (a), (b) and (c) following: (a) an identification of a version of said presentation, said version for a predetermined group of presentation audience members, (b) an identification of one of said first and [second]said alternative subcollections identified in a predetermined script for said presentation; and (c) information for identifying an alternative segment determined by a leader of a performance of said presentation, wherein said alternative segment is not identified in said script.

E3

E4

18 ~~74~~. (Amended) A network presentation distribution system for presenting a presentation, comprising:

one or more content supplying network nodes able to provide a plurality of segments to a first client node of a plurality of network client nodes, via a communications network, wherein each of said segments provides a portion of a particular presentation;

a presentation controlling network node for transmitting presentation control information providing identities of segments in a collection of said segments when the presentation is performed at said first client node;

a presentation network component at said first client node, wherein, after receiving said presentation control information, said presentation network component transmits segment selection information, obtained using said presentation control information, to a first of said content supplying nodes for obtaining the collection [at] by said first client node;

a segment selector that uses one of: (a) the presentation control information, and (b) the segment selection information for identifying a first collection of said segments to transmit from the first content supplying node to the first client node;

wherein said presentation controlling network node synchronizes a performance of said presentation on said first client node with a performance of said presentation on a second client node so that a particular one or more of said segments are presented on said first client node synchronously with a presentation of an alternative one or more segments [being

]output by one of said content supplying nodes to said second client node, wherein said alternative one or more segments correspond in content to said particular one or more segments.

E4

19 ~~75~~. (Amended) A network presentation distribution system as claimed in Claim 18 ~~74~~, wherein said segment selection information depends on a data transmission characteristic of a transmission to the first client node from one of the content supplying nodes;

wherein said data transmission characteristic is dependent on one of a network data transmission rate and a measurement of network data transmission errors; and

wherein said data transmission characteristic is expected to be indicative of a current transmission rate to the first client node from the one content supplying node.

---

21 ~~76~~. (Twice Amended) A method for presenting a networked presentation, comprising:

E5

storing a plurality of segments of a presentation for network access via one or more content supplying nodes of a communications network, wherein there are subcollections of one or more of the segments, each subcollection having a predetermined presentation order and there is a first and a second of the subcollections, wherein said first subcollection is replaceable with said second subcollection when presenting the presentation;

[first] identifying a plurality of network client nodes for presenting the presentation;

transmitting, via the communications network, presentation control information to a first and second of the client nodes;

first identifying said first subcollection for presenting at the first client node using said transmitted presentation control information;

second identifying said second subcollection for presenting at the second [user] client node in place of the first subcollection, using said transmitted presentation control information;

first retrieving said first subcollection from said content supplying nodes for

presenting at the first client node;

second retrieving said second subcollection from said content supplying nodes for presenting at the second client node substantially simultaneously with the presenting of the first subcollection at the first client node.

E5

23. ~~78~~. (Amended) A method as claimed in Claim ~~77~~, further including a step of synchronously presenting the presentation at the first client node with presenting the presentation at the second client node so that each of the subcollections presented at the first client node is presented substantially simultaneously with some one of the [second]subcollections at the second client node.

E6

24. ~~79~~. (Amended) A method as claimed in Claim ~~78~~, wherein said step of [synchronizing]synchronously presenting includes obtaining, by said first client node, a network performance measurement of a network transmission from a first of the content supplying network nodes to the first client node.

27. ~~82~~. (Amended) The method as claimed in Claim ~~76~~, wherein said step of first identifying occurs prior to said step of first retrieving and said step of first identifying includes:

E7

obtaining one or more measurements related to an expected time for transmitting said first subcollection to the first client node via the communications network;

wherein said one or more measurements are indicative of one or more of:

(a) a size of said first subcollection;

(b) a bandwidth of previous transmissions via the communications network to the first client node;

(c) an overhead indicative of a protocol used in transmissions via the communication network to the first client node;

(d) an allotted time for said first client to receive said first subcollection;

(e) a fluctuation in bandwidth of the communications network;

fuboTV Media Inc.
Exhibit 1015
Page 312

(f) an error rate [for the first client node]from the communications network;

(g) a predictive statistical expectation of a bandwidth on the communications network.

E7

29 ~~30~~ 84. (Amended) The method as claimed in Claim 28 ~~83~~, further including determining said desired time by [comparing]determining one or more of:

(a) a measurement related to the performance of the presentation at said second client node[that receives];

(b) a predetermined length of time; and

(c) a length of time determined by a leader for the presentation.

E8

30 ~~85~~. (Amended) The method as claimed in Claim 28 ~~83~~, further including determining said desired time by comparing: (a) a transmission rate of the communications network between the first client node and at least one of said content supplying nodes; and (b) a transmission rate of the communications network between said second client node, and at [last]least one of said content supplying nodes.

E9

31 ~~86~~. (Twice Amended) A method for presenting a networked presentation, comprising:

storing a plurality of segments for a presentation, wherein said segments are network accessible from one or more content supplying network nodes for presenting the presentation, and wherein for a first subcollection of one or more of the segments, said first subcollection is capable of being accessed from a first of the content supplying nodes, and at least one of (a) and (b):

(a) said first subcollection has a corresponding different second subcollection of one or more of said segments that has been identified as a replacement for the first subcollection, and

(b) said first subcollection is capable of being accessed from a second of said

content supplying nodes;

providing for a first client node [made with], a network transmission of the presentation, wherein the first client node has network access to at least one of: the first and second subcollections, and the first and second content supplying nodes;

determining, for the first client node, a measurement indicative of an expected network performance of a communications network for transmitting the first subcollection from the first content supplying node to the first client node;

E9

selecting at least one of: the second subcollection and the second content supplying node when said measurement is indicative of an undesirable performance of the [performance of the] presentation at the first client node.

E10

34 89. (Amended) A method of presenting a multimedia presentation comprising:

storing a script of one or more presentation commands for performing multimedia segments of said presentation wherein a first of said one or more commands references one or more unresolved identifiers of one or more [network]content supplying nodes providing access to at least a video portion of a first subcollection of one or more of said segments via a communications network;

storing a communications network identifier for each of one or more of said content supplying nodes providing network access to at least said video portion of said first subcollection;

identifying one or more client nodes for receiving a performance of said presentation;

resolving said unresolved identifiers of a first of said commands using said stored communications network identifiers for said one or more content supplying nodes, thereby obtaining a resolved command;

performing said resolved command at each of said client nodes during said performance by requesting said at least video portion of said first subcollection from [said]a first of said content supplying nodes;

requesting by a first of said client nodes, when said at least video portion of said first subcollection is not received by said first client node within a predetermined time, one of: (a) at least a video portion of an alternative subcollection of one or more of said segments, in place of said at least video portion of said first subcollection, from one of said content supplying nodes, and (b) said at least video portion of said first subcollection from an alternate one of said content supplying nodes.

E10

E11

30. 91. (Amended) A network presentation distribution system for presenting a presentation, comprising:

one or more presentation content supplying nodes of a communications network, said content supplying nodes for providing access to a collection of data segments of said presentation using said communications network, wherein said collection includes first and second subcollections of one or more of said segments;

a presentation controlling node for transmitting to at least a first client node, via the communications network, presentation control information used for identifying a group of subcollections of said segments, said group including said first and second subcollections; and

a first segment selector, activated in response to said first client node receiving said presentation control information, for selecting one of said first and second subcollections for transmitting said selected subcollection from one of said presentation content supplying nodes to said first client node;

wherein said first segment selector includes a comparator for comparing (a) and (b) following: (a) a value indicative of a length of time expected [to receive] for said first client node to receive one of said first and second subcollections, and (b) a value indicative of one of: (i) a length of time related to one or more other client nodes receiving one or more subcollections of said collection, (ii) a predetermined default length of time, and (iii) a length of time determined by a leader of said presentation performance.

E12

~~93~~ 39 (Amended) A network presentation distribution system for presenting a presentation, comprising:

a first and second presentation content supplying nodes of a communications network, said first and second content supplying nodes for providing access to one or more collections of data segments of said presentation using said communications network;

a presentation controlling node for transmitting to at least a first client node, presentation control information used for identifying a first subcollection of said data segments for [presentation]presenting at said first client node;

a content node selector, activated in response to said first client node receiving said presentation control information, for selecting one of said first and second content supplying nodes for transmitting one of: (a) said first subcollection to said first client node using said communications network; and (b) an alternative subcollection of one or more of said segments predetermined as a replacement for said first subcollection; and

a phone bridge controller for routing presentation related audio communications to a client site having said first client node, via one or more phone bridges, wherein a telephone at said client site transforms the presentation related audio communications into an audible communication having natural language speech included therein.

E13

~~39~~ 42 ~~95~~. (Amended) A network presentation distribution system for presenting a presentation, comprising:

a first and second presentation content supplying nodes of a communications network, said first and second content supplying nodes for providing access to one or more collections of data segments of said presentation using said communications network;

a presentation controlling node for transmitting, via the communications network, to at least a first client node, presentation control information used for identifying a first subcollection of said segments for presentation at said first client node;

a content node selector, activated in response to said first client node receiving said presentation control information, for selecting one of said first and second content supplying

nodes for transmitting one of: (a) said first subcollection to said first client node using said communications network; and (b) an alternative subcollection of one or more of said segments predetermined as a replacement for said first subcollection;

wherein said presentation controlling node includes a presentation script processing component for generating presentation performance commands from a script for said presentation, wherein for said first client node, said generated commands synchronize a display of a video content of said segments with a performance of a related presentation audio content; and

E13

wherein said presentation controlling node includes a phone bridge controller for directing a phone bridge to provide audio communications between a client site having said first client node and [one of: said presentation controlling node and] a leader of a performance of said presentation, wherein said phone bridge routes presentation performance related audio information differently from network communications between said presentation controlling node and first client node via said communications network.

13

96. (Amended) A network presentation distribution system for presenting a presentation on a communications network having unexpected network performance fluctuations at a user node, comprising:

one or more presentation content supplying nodes of a communications network, said content supplying nodes for providing access, [by a user]at the user node [of]via the communications network, to a collection of data segments of said presentation using said communications network, wherein said collection includes first and second subcollections of one or more of said segments;

a computational component for determining network performance information of the communications network, wherein said computational component determines said network performance information using network data obtained from network transmissions detected at said user node;

a segment selector, activated during the presentation for selecting, using said network

fuboTV Media Inc.
Exhibit 1015
Page 317

E13

performance information, one of said first and second subcollections for transmitting from one of said presentation content supplying nodes to said user node; and

a presentation component at said user node for presenting said selected one of said first and second subcollections to [the]a user at the user node.

E14

20 ~~97~~. (New) The network presentation distribution system as claimed in Claim 18 ~~74~~, wherein a performance of said particular one or more segments on said first client node includes video with motion, and a performance of said alternative one or more segments on said second client node includes video with one of: (i) reduced motion, and (ii) no motion.

36 ~~98~~. (New) The method of Claim 34 ~~89~~, further including a step of controlling said performance of said presentation via a leader node receiving input from a leader for said performance of said presentation, wherein the leader directs a pace and content of the presentation performance via a presentation controlling network node, wherein the presentation controlling network node synchronizes said performance of said presentation on said first client node with a performance of said presentation on a second client node so that when one of said first and said alternative subcollection are presented on said first client node, there is a synchronized performance of a second subcollection of said segments on said second client node, wherein said first and second subcollections correspond in content.

40 ~~99~~. (New) The network presentation distribution system of Claim 39 ~~95~~, further including:

a cache at said first client node for caching, as a cached subcollection, said selected one of said first subcollection and said alternative subcollection;

wherein said cached subcollection is cached within a desired time prior to a performance of said cached subcollection, and wherein said desired time is determined using one or more of:

(a) a measurement related to the performance of the presentation at said second

110

E

E14

client node;

(b) a predetermined length of time; and

(c) a length of time determined by a leader for the presentation.

REMARKS.

The amendment to the specification is for claiming the benefit of the prior U.S. Provisional Patent Application. Note, that this prior provisional application is cited on the filing receipt for the present application. Further note that this amendment is needed for proper protection of the invention.

Regarding amendments to the claims and new claims, each claim amendment and new claim will be discussed hereinbelow. These amendments are needed to better clarify the claims, and to better protect what the Applicants consider as their invention. The three new dependent claims are believed necessary to more appropriately protect the invention from possible prior art that is currently unknown but that may subsequently become known. Additionally, the Applicant's commercialization of the present invention is, as with many other Internet endeavors, time critical. Thus, timely issuance of the amended and new claims herein is important for the proper commercialization of the present invention. Moreover, the amendments herein were not presented earlier for the following reasons:

(a) Applicant's did not fully understand the claims, and have only recently begun to understand what the allowed claims cover; and

(b) There was a concern that if the claim amendments of the nature presented here were presented in response to the previous Office Action, then, at some future time, such amendments could be misinterpreted as necessary limitations on the patent protection for the present invention.

Additionally, the requested amendments and new claims herein are believed to require no additional search or examination in that it is believed the amendments and new claims: (a) do not introduce any new issues of patentability, and (b) do not depart from the patentable subject matter of the currently allowed claims.

Regarding amended Claims 62, and 71, these claims are dependent on allowed independent Claim 57, and accordingly, are believed to be patentable. Moreover, the amendments of these claims are believed to not affect the aspects of these claims that has been determined to be patentable subject matter. Thus, these claims are believed to remain allowable.

Regarding amended Claim 72, the amendments to this independent claim both correct and clarify the claim language so that the scope of the claim is better defined. For example, in line 19 of this claim hereinabove, the text appears to suggest that "second collection" has been previously recited. However, there is no such prior recitation. Thus, to cure this problem, the claim now refers to "said alternative" subcollection instead. Moreover, the amendments herein are believed to not affect the aspects of these claims that has been determined to be patentable subject matter. Thus, the claim, as amended, is believed to be allowable.

Regarding amended Claim 74, the amendments to this independent claim both correct and clarify the claim language so that the scope of the claim is better defined without deviating from the aspects of the claim that has been determined to constitute patentable subject matter. For example, the amendment of the last paragraph of this claim now describes the intended aspect of <u>performing the presentation synchronously</u> at both the first and second client nodes. Thus, the claim, as amended, is believed to be allowable.

Regarding Claim 75, the wording changes herein are believed to be clarifications that do not affect the patentability thereof. Thus, the claim, as amended, is believed to be allowable.

Regarding Claim 76, the wording changes herein are believed to be changes that do not affect the scope of the claim. Note that the deletion of the word "first" in line 7 of this claim hereinabove disambiguates dependent Claim 82 since this latter claim refers to "said first identifying" step and there are currently two such steps. Thus, the claim, as amended, is believed to be allowable.

Regarding Claim 78, the amendment to this dependent claim better defines the claim without departing from the patentable aspects in the allowed claims. In particular, the phrase "one of the second subcollection" has been changed to --some one of the subcollections-- to more clearly protect what Applicants consider as their invention. Thus, the claim, as amended, is believed to be allowable since it does not depart from allowed subject matter, and since this claim is dependent on allowable Claims 76 and 77.

E

fuboTV Media Inc.
Exhibit 1015
Page 320

Regarding Claim 79, the requested amendment clarifies the claim in that "said step of synchronizing" should more properly refer to "said step of synchronously presenting" as recited in Claim 78 upon which Claim 79 is dependent. Thus, the claim, as amended, is believed to be allowable.

Regarding Claim 82, the requested amendment better conforms to the specification. Moreover, wording similar to this amendment (i.e., "an error rate from the communications network", Claim 82 line14) is recited in Claim 75 (lines 5 and 6 of this Claim 75 hereinabove). Thus, since Claim 82, as amended, does not depart from what is believed to have been determined to be patentable matter, and since this claim is additionally dependent upon allowable Claim 76, Claim 82 is believed to be allowable.

Regarding Claim 84, the requested amendment of this dependent claim better describes the patentable aspect of the invention for which Applicant's seek protection. Accordingly, it is believed this claim, as amended, is allowable at least due to its dependence on presumed allowable Claim 83.

Regarding Claim 85, a spelling error is corrected.

Regarding Claim 86, the requested amendment of this dependent claim corrects errors in the claim. In particular, the phrase "a first client made with" (line 12 of this claim hereinabove) was entered as a first amendment to the present claim, and is incorrect. Instead, the present replacement of "made with" by –node—is the correct amendment. Additionally, the duplicated phrase "performance of the" has been deleted. Accordingly, since these amendments do not depart from what has been determined to be patentable matter, it is believed that this claim is allowable.

Regarding Claim 89, the requested amendments better describe the patentable aspects of the invention for which Applicant's seek protection. Moreover, it is believed that amended Claim 89 does not depart from the aspects of the claim that have been determined to be patentable. Additionally, the addition of the term "at least said video portion of" as a modifier to "said first subcollection" in the present claim is similar to the term "one or more video portions of the multimedia presentation" used in (unamended) Claim 87. The other amendments to the present claim are for clarification. For example, the phrase "said first content supplying node" (lines 15 and 16 of Claim 89 hereinabove) is not previously recited in this independent claim, and accordingly the

E

fuboTV Media Inc.
Exhibit 1015
Page 321

phrase has been changed to --a first of said content supplying nodes—to correct for the lack of such an antecedent basis. Thus, it is believed that the present claim, as amended, is allowable.

Regarding Claim 91, the requested amendments are believed to not broaden the scope of the claim except for the insertion of "one of" in lines 17 and 18 of this claim hereinabove. The insertion of "one of" is needed for proper protection of the invention in that the claim, as amended, properly describes how various embodiments of the invention are currently implemented and/or are likely to be implemented commercially. It is believed no additional search or examination is required since this amendment does not depart from the patentable aspects of this claim which is believed to be the combination of:

(A) the presentation content supplying nodes,

(B) the presentation controlling node,

(C) the first segment selector,

(D) wherein the first segment selector includes a comparator for comparing:

(a) a value indicative of a length of time expected for a (first) client node to receive a (first or second) subcollection, and

(b) another length of time (i.e., *one of*:. (i) a length of time related to one or more other client nodes receiving one or more subcollections of said collection, (ii) a predetermined default length of time, and (iii) a length of time determined by a leader of said presentation performance).

Additionally, note that the above three options (i) through (iii) of Claim 91 are also substantially provided in Claim 84. Accordingly, it is believed that Claim 91 as amended is allowable.

Regarding Claim 93, the amendments herein clarify the claim language and it is believed they do not change the scope of the claim.

Regarding Claim 95, the amendments herein clarify the claim language and in fact *narrow* the scope of the claim. Thus, it is believed that Claim 95, as amended, is allowable.

Regarding Claim 96, the amendments herein clarify the claim and do not depart from what is believed to be the patentable aspects therein. Thus, it is believed that Claim 96, as amended, is

E

fuboTV Media Inc.
Exhibit 1015
Page 322

allowable.

Regarding new Claim 97, this dependent claim is believed patentable at least due to the patentability of Claim 74 upon which it depends. Moreover, it is believed that no new matter is hereby claimed in that the content of Claim 97 is substantially the same as that of Claim 62.

Regarding new Claim 98 this dependent claim is believed patentable at least due to the patentability of Claim 89 upon which it depends. Moreover, it is believed that no new matter is hereby claimed in that the content of Claim 98 is substantially the same as that of Claim 71.

Regarding new Claim 99, this dependent claim is believed patentable at least due to the patentability of Claim 89 upon which it depends. Moreover, it is believed that no new matter is hereby claimed in that the content of Claim 98 is substantially the same as the content of the combination of Claims 83 and 84.

Since all pending claims in the present application are believed to be in condition for allowance, Applicants respectfully request reconsideration of the present application for allowance of the above amended claims and new claims. Please debit deposit account 19-1970 for the three new dependent claims 97 – 99 added herein. No other fees are believed due with this amendment. However, in the event additional fees are due, please debit Deposit Account No. 19-1970.

Respectfully submitted,

SHERIDAN ROSS P.C.

By: [signature]

Dennis J. Dupray, Ph.D.
Registration No. 46,299
1560 Broadway, Suite 1200
Denver, Colorado 80202-5141
(303) 863-9700

Date: July 26, 2000

m:\3654\-1\pm-312(a) Amendment Final

E

fuboTV Media Inc.
Exhibit 1015
Page 323

UNITED STATES DEPARTMENT OF COMMERCE
Patent and Trademark Office
Address: COMMISSIONER OF PATENTS AND TRADEMARKS
Washington, DC 20231

APPLICATION NO.	FILING DATE	FIRST NAMED INVENTOR	ATTORNEY DOCKET NO.
09/052,862	03/31/98	JOHNSON	F 3654-1

022442
SHERIDAN ROSS PC
1560 BROADWAY
SUITE 1200
DENVER CO 80202

LM51/0727

EXAMINER
ROMERO, A

ART UNIT	PAPER NUMBER
2756	

DATE MAILED: 07/27/00

Please find below and/or attached an Office communication concerning this application or proceeding.

Commissioner of Patents and Trademarks

PTO-90C (REV. 2/95)

1-File Copy

☆U.S.GOVERNMENT PRINTING OFFICE 1995-319-826

Interview Summary	Application No. 09/052,862	Applicant(s) Ogdon et al.
	Examiner Almari Romero	Group Art Unit 2756

All participants (applicant, applicant's representative, PTO personnel):

(1) *Almari Romero, USPTO* (3) *Mr. Dennis Dupray, Reg #46,299*

(2) *Mark Rinehart, USPTO* (4) _____

Date of Interview *Jul 26, 2000*

Type: ☒ Telephonic ☐ Personal (copy is given to ☐ applicant ☐ applicant's representative).

Exhibit shown or demonstration conducted: ☐ Yes ☒ No. If yes, brief description:

Agreement ☒ was reached. ~~☒ was not reached.~~

Claim(s) discussed: *62, 71, 72, 74-76, 78, 79, 82, 84-86, 89, 91, 93, and 95-99*

Identification of prior art discussed:
None

Description of the general nature of what was agreed to if an agreement was reached, or any other comments:
Applicant and Examiner discussed the proposed 312(a) amendment faxed on July 18, 2000. Examiner pointed out in the proposed change in claim 74 of deleting "obtaining" and adding "requesting" in the claimed language is broading the scope of the claim and will not be entered after allowance.

(A fuller description, if necessary, and a copy of the amendments, if available, which the examiner agreed would render the claims allowable must be attached. Also, where no copy of the amendents which would render the claims allowable is available, a summary thereof must be attached.)

1. ☒ It is not necessary for applicant to provide a separate record of the substance of the interview.

Unless the paragraph above has been checked to indicate to the contrary, A FORMAL WRITTEN RESPONSE TO THE LAST OFFICE ACTION IS NOT WAIVED AND MUST INCLUDE THE SUBSTANCE OF THE INTERVIEW. (See MPEP Section 713.04). If a response to the last Office action has already been filed, APPLICANT IS GIVEN ONE MONTH FROM THIS INTERVIEW DATE TO FILE A STATEMENT OF THE SUBSTANCE OF THE INTERVIEW.

2. ☐ Since the Examiner's interview summary above (including any attachments) reflects a complete response to each of the objections, rejections and requirements that may be present in the last Office action, and since the claims are now allowable, this completed form is considered to fulfill the response requirements of the last Office action. Applicant is not relieved from providing a separate record of the interview unless box 1 above is also checked.

Mark H. Rinehart
Primary Examiner

Examiner Note: You must sign and stamp this form unless it is an attachment to a signed Office action.

fuboTV Media Inc.
Exhibit 1015
Page 325

UNITED STATES DEPARTMENT OF COMMERCE
Patent and Trademark Office
Address: COMMISSIONER OF PATENTS AND TRADEMARKS
Washington, D.C. 20231

BCL

APPLICATION NO.	FILING DATE	FIRST NAMED INVENTOR	ATTORNEY DOCKET NO.
09/052,862	03/31/98	JOHNSON F	3654-1

022442
SHERIDAN ROSS PC
1560 BROADWAY
SUITE 1200
DENVER CO 80202

LM01/0804

EXAMINER
ROMERO, A

ART UNIT	PAPER NUMBER
2756	18

DATE MAILED: 08/04/00

Please find below and/or attached an Office communication concerning this application or proceeding.

Commissioner of Patents and Trademarks

PTO-90C (Rev. 2/95)
U.S. G P.O. 2000 ; 465-188/25266

1- File Copy

Response to Rule 312 Communication	Application No. 09/052,862	Applicant(s) Ogdon et al.
	Examiner Almari Romero	Group Art Unit 2756

☐ The petition filed on _____ under 37 CFR 1.312(b) is granted. The paper has been forwarded to the examiner for consideration on the merits.

☒ The amendment filed on *Jul 27, 2000* under 37 CFR 1.312 has been considered, and has been:

- ☒ entered.
- ☐ entered as directed to matters of form not affecting the scope of the invention (Order 3311).
- ☐ disapproved. See explanation below.
- ☐ entered in part. See explanation below.

Mark H. Rinehart
Primary Examiner

fuboTV Media Inc.
Exhibit 1015
Page 327

PART B—ISSUE FEE TRANSMITTAL

Complete and mail this form, together with applicable fees, to: **Box ISSUE FEE**
Assistant Commissioner for Patents
Washington, D.C. 20231

OIPE JC141 AUG 2 4 2000 PATENT & TRADEMARK OFFICE

JC B#

MAILING INSTRUCTIONS: This form should be used for transmitting the ISSUE FEE. Blocks 1 through 4 should be completed where appropriate. All further correspondence including the Issue Fee Receipt, the Patent, advance orders and notification of maintenance fees will be mailed to the current correspondence address as indicated unless corrected below or directed otherwise in Block 1, by (a) specifying a new correspondence address; and/or (b) indicating a separate "FEE ADDRESS" for maintenance fee notifications.

CURRENT CORRESPONDENCE ADDRESS (Note: Legibly mark-up with any corrections or use Block 1)

022442 LM12/0620
SHERIDAN ROSS PC
1560 BROADWAY
SUITE 1200
DENVER CO 80202

Note: The certificate of mailing below can only be used for domestic mailings of the Issue Fee Transmittal. This certificate cannot be used for any other accompanying papers. Each additional paper, such as an assignment or formal drawing, must have its own certificate of mailing.

Certificate of Mailing

I hereby certify that this Issue Fee Transmittal is being deposited with the United States Postal Service with sufficient postage for first class mail in an envelope addressed to the Box Issue Fee address above on the date indicated below.

Chasity C. Rossum (Depositor's name)
Chasity C. Rossum (Signature)
Aug. 22, 2000 (Date)

APPLICATION NO.	FILING DATE	TOTAL CLAIMS	EXAMINER AND GROUP ART UNIT		DATE MAILED
09/052,862	03/31/98	040	ROMERO, A	2756	06/20/00

First Named Applicant OGDON, 35 USC 154(b) term ext. = 0 Days.

TITLE OF INVENTION METHOD AND SYSTEM FOR PROVIDING A PRESENTATION ON A NETWORK

ATTY'S DOCKET NO.	CLASS-SUBCLASS	BATCH NO.	APPLN. TYPE	SMALL ENTITY	FEE DUE	DATE DUE
0 3654-1	709-224.000	032	UTILITY	YES	$605.00	09/20/00

1. Change of correspondence address or indication of " Fee Address" (37 CFR 1.363). Use of PTO form(s) and Customer Number are recommended, but not required.

☐ Change of correspondence address (or Change of Correspondence Address form PTO/SB/122) attached.

☐ "Fee Address" indication (or "Fee Address" Indication form PTO/SB/47) attached.

2. For printing on the patent front page, list (1) the names of up to 3 registered patent attorneys or agents OR, alternatively, (2) the name of a single firm (having as a member a registered attorney or agent) and the names of up to 2 registered patent attorneys or agents. If no name is listed, no name will be printed.

1 Sheridan
2 Ross P.C.
3

3. ASSIGNEE NAME AND RESIDENCE DATA TO BE PRINTED ON THE PATENT (print or type)
PLEASE NOTE: Unless an assignee is identified below, no assignee data will appear on the patent. Inclusion of assignee data is only appropiate when an assignment has been previously submitted to the PTO or is being submitted under separate cover. Completion of this form is NOT a subsititue for filing an assignment.

(A) NAME OF ASSIGNEE MSHOW.com, Inc.

(B) RESIDENCE: (CITY & STATE OR COUNTRY) Highlands Ranch, CO

Please check the appropriate assignee category indicated below (will not be printed on the patent)
☐ individual ☒ corporation or other private group entity ☐ government

4a. The following fees are enclosed (make check payable to Commissioner of Patents and Trademarks):
☒ Issue Fee
☒ Advance Order - # of Copies 10

4b. The following fees or deficiency in these fees should be charged to:
DEPOSIT ACCOUNT NUMBER 19-1970
(ENCLOSE AN EXTRA COPY OF THIS FORM)
☒ Issue Fee
☒ Advance Order - # of Copies 10

The COMMISSIONER OF PATENTS AND TRADEMARKS IS requested to apply the Issue Fee to the application identified above.

(Authorized Signature) (Date) Aug. 22, 2000

NOTE; The Issue Fee will not be accepted from anyone other than the applicant; a registered attorney or agent; or the assignee or other party in interest as shown by the records of the Patent and Trademark Office.

Burden Hour Statement: This form is estimated to take 0.2 hours to complete. Time will vary depending on the needs of the individual case. Any comments on the amount of time required to complete this form should be sent to the Chief Information Officer, Patent and Trademark Office, Washington, D.C. 20231. DO NOT SEND FEES OR COMPLETED FORMS TO THIS ADDRESS. SEND FEES AND THIS FORM TO: Box Issue Fee, Assistant Commissioner for Patents, Washington D.C. 20231

Under the Paperwork Reduction Act of 1995, no persons are required to respond to a collection of information unless it displays a valid OMB control number.

08/25/2000 AGOITOM1 00000185 09052862
01 FC:242 605.00 OP
02 FC:561 30.00 OP

6-00

TRANSMIT THIS FORM WITH FEE

fuboTV Media Inc.
Exhibit 1015
Page 328

OIPE JC118
AUG 2 8 2000
PATENT & TRADEMARK OFFICE

B

IN THE UNITED STATES PATENT AND TRADEMARK OFFICE

#19M

In Re the Application of:	)	Group Art Unit: 2756
	)	
JOHNSON and OGDON (as per Filing Receipt Correction)		Examiner: A. Romero
		Issue Batch No.: O32
OGDON and JOHNSON (as identified in PTO Transmittals)	)	SUBMISSION OF FORMAL DRAWINGS
	)	
Serial No.: 09/052,862	)	
	)	
Filed: March 31, 1998	)	
	)	
Atty. File No.: 3654-1	)	
	)	
For: "METHOD AND SYSTEM FOR PROVIDING A PRESENTATION ON A NETWORK"	)	

CERTIFICATE OF MAILING

I HEREBY CERTIFY THAT THIS CORRESPONDENCE IS BEING DEPOSITED WITH THE UNITED STATES POSTAL SERVICE AS FIRST CLASS MAIL IN AN ENVELOPE ADDRESSED TO COMMISSIONER OF PATENTS AND TRADEMARKS, WASHINGTON, DC 20231 ON August 22, 2000.

SHERIDAN ROSS P.C.

BY: Charles C. Rosen

Assistant Commissioner for Patents
Attn: Drawing Review Branch
Washington, D.C. 20231

Dear Sir:

In response to the "Notice of Allowability" accompanying the "Notice of Allowance and Issue Fee Due" mailed June 20, 2000, regarding the above-identified patent application, enclosed for filing with said application are 7 sheets of formal, inked drawings illustrating Figs. 1A, 1B, 2A, 2B, 2C, 2D and 3 of the application. Figs. 1-3 constitute all of the drawings in the application.

Respectfully submitted,

SHERIDAN ROSS P.C.

By: Dennis J. Dupray

Dennis J. Dupray, Ph.D.
Registration No. 46,299
1560 Broadway, Suite 1200
Denver, Colorado 80202-5141
(303) 863-9700

Date: Aug. 22, 2000

m:\3654\-1\pto-formal drawings

06.00

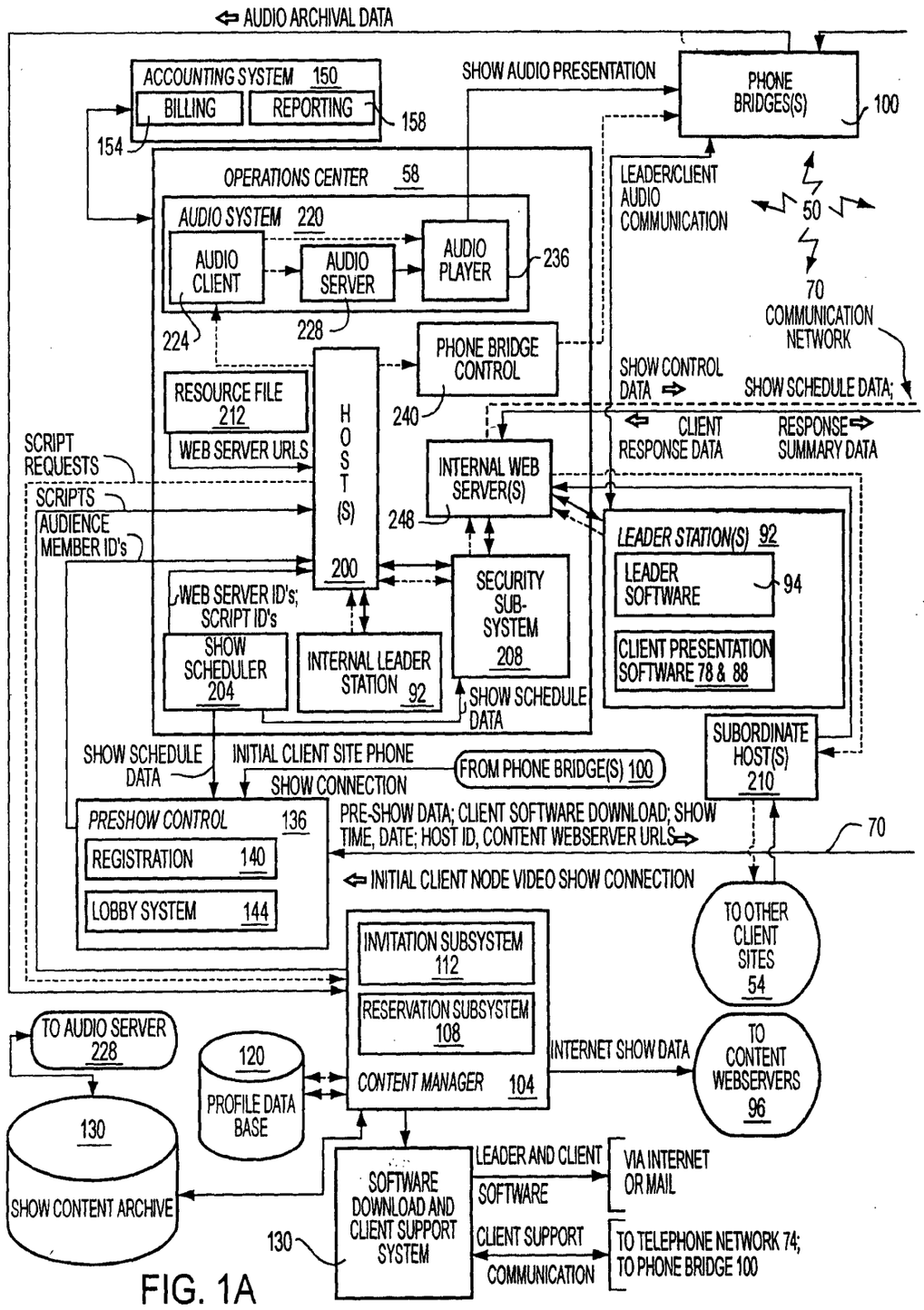
AUDIO ARCHIVAL DATA
ACCOUNTING SYSTEM 150
BILLING
REPORTING
158
154
SHOW AUDIO PRESENTATION
PHONE BRIDGES(S)
100
OPERATIONS CENTER 58
AUDIO SYSTEM 220
AUDIO CLIENT
AUDIO SERVER
AUDIO PLAYER
236
224
228
LEADER/CLIENT AUDIO COMMUNICATION
50
70
COMMUNICATION NETWORK
PHONE BRIDGE CONTROL
240
SHOW CONTROL DATA
SHOW SCHEDULE DATA;
RESOURCE FILE 212
WEB SERVER URLS
HOST(S) 200
CLIENT RESPONSE DATA
RESPONSE SUMMARY DATA
SCRIPT REQUESTS
SCRIPTS
AUDIENCE MEMBER ID's
INTERNAL WEB SERVER(S)
248
LEADER STATION(S) 92
LEADER SOFTWARE
94
WEB SERVER ID's; SCRIPT ID's
SECURITY SUB-SYSTEM 208
CLIENT PRESENTATION SOFTWARE 78 & 88
SHOW SCHEDULER 204
INTERNAL LEADER STATION 92
SHOW SCHEDULE DATA
SUBORDINATE HOST(S) 210
SHOW SCHEDULE DATA
INITIAL CLIENT SITE PHONE
SHOW CONNECTION
FROM PHONE BRIDGE(S) 100
PRESHOW CONTROL 136
REGISTRATION 140
LOBBY SYSTEM 144
PRE-SHOW DATA; CLIENT SOFTWARE DOWNLOAD; SHOW TIME, DATE; HOST ID, CONTENT WEBSERVER URLS
70
INITIAL CLIENT NODE VIDEO SHOW CONNECTION
TO OTHER CLIENT SITES 54
INVITATION SUBSYSTEM 112
RESERVATION SUBSYSTEM 108
CONTENT MANAGER 104
INTERNET SHOW DATA
TO CONTENT WEBSERVERS 96
TO AUDIO SERVER 228
120
PROFILE DATA BASE
130
SHOW CONTENT ARCHIVE
SOFTWARE DOWNLOAD AND CLIENT SUPPORT SYSTEM
130
LEADER AND CLIENT SOFTWARE
VIA INTERNET OR MAIL
CLIENT SUPPORT COMMUNICATION
TO TELEPHONE NETWORK 74; TO PHONE BRIDGE 100

FIG. 1A

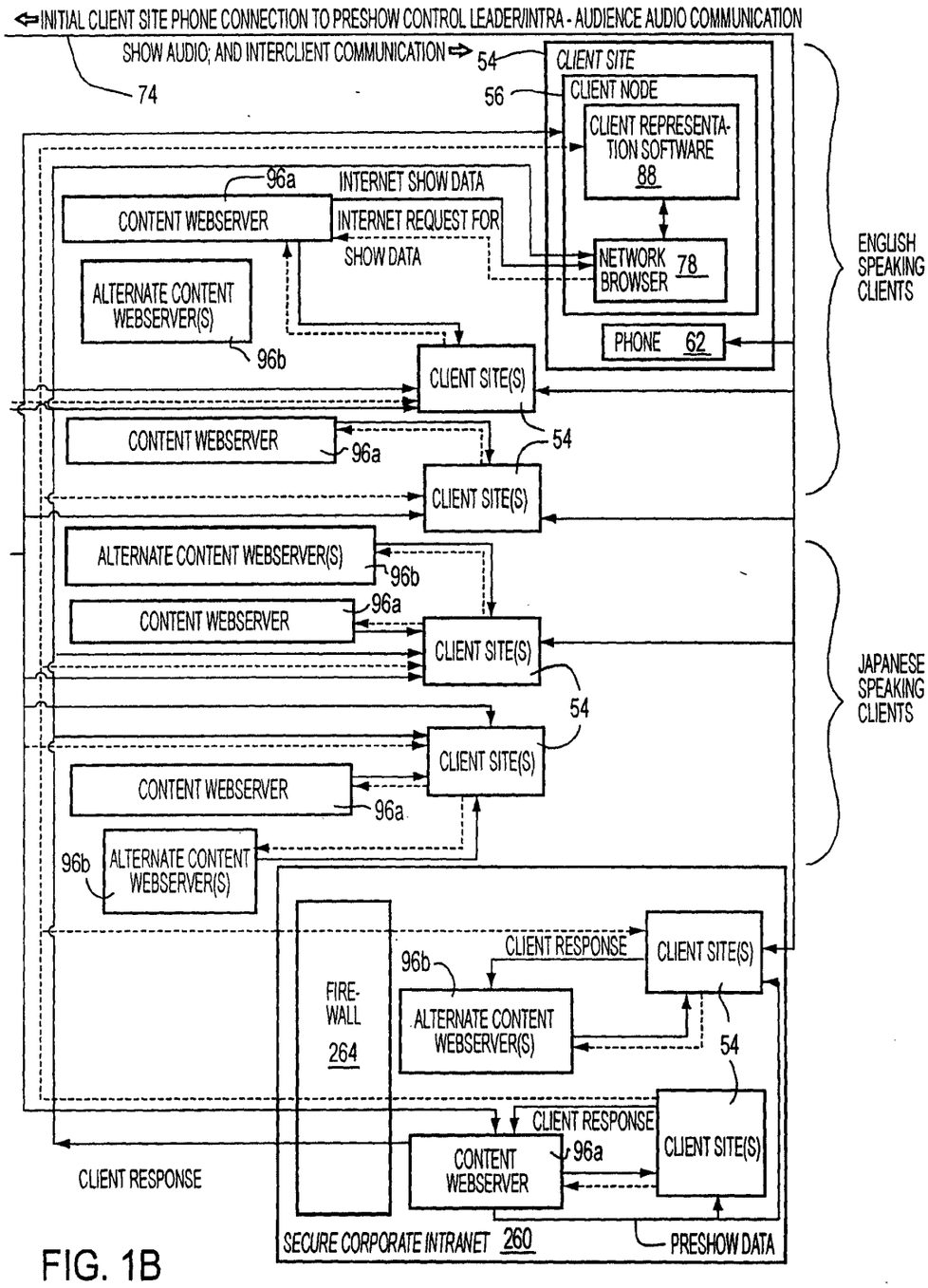
INITIAL CLIENT SITE PHONE CONNECTION TO PRESHOW CONTROL LEADER/INTRA - AUDIENCE AUDIO COMMUNICATION
SHOW AUDIO; AND INTERCLIENT COMMUNICATION
74
54
CLIENT SITE
56
CLIENT NODE
CLIENT REPRESENTATION SOFTWARE 88
96a
INTERNET SHOW DATA
CONTENT WEBSERVER
INTERNET REQUEST FOR SHOW DATA
NETWORK BROWSER 78
ALTERNATE CONTENT WEBSERVER(S)
96b
PHONE 62
CLIENT SITE(S)
ENGLISH SPEAKING CLIENTS
CONTENT WEBSERVER
96a
54
CLIENT SITE(S)
ALTERNATE CONTENT WEBSERVER(S)
96b
96a
CONTENT WEBSERVER
CLIENT SITE(S)
54
JAPANESE SPEAKING CLIENTS
CLIENT SITE(S)
CONTENT WEBSERVER
96a
96b
ALTERNATE CONTENT WEBSERVER(S)
CLIENT RESPONSE
CLIENT SITE(S)
96b
FIRE-WALL 264
ALTERNATE CONTENT WEBSERVER(S)
54
CLIENT RESPONSE
CLIENT SITE(S)
CONTENT WEBSERVER
96a
CLIENT RESPONSE
SECURE CORPORATE INTRANET 260
PRESHOW DATA

FIG. 1B

FIG. 2A

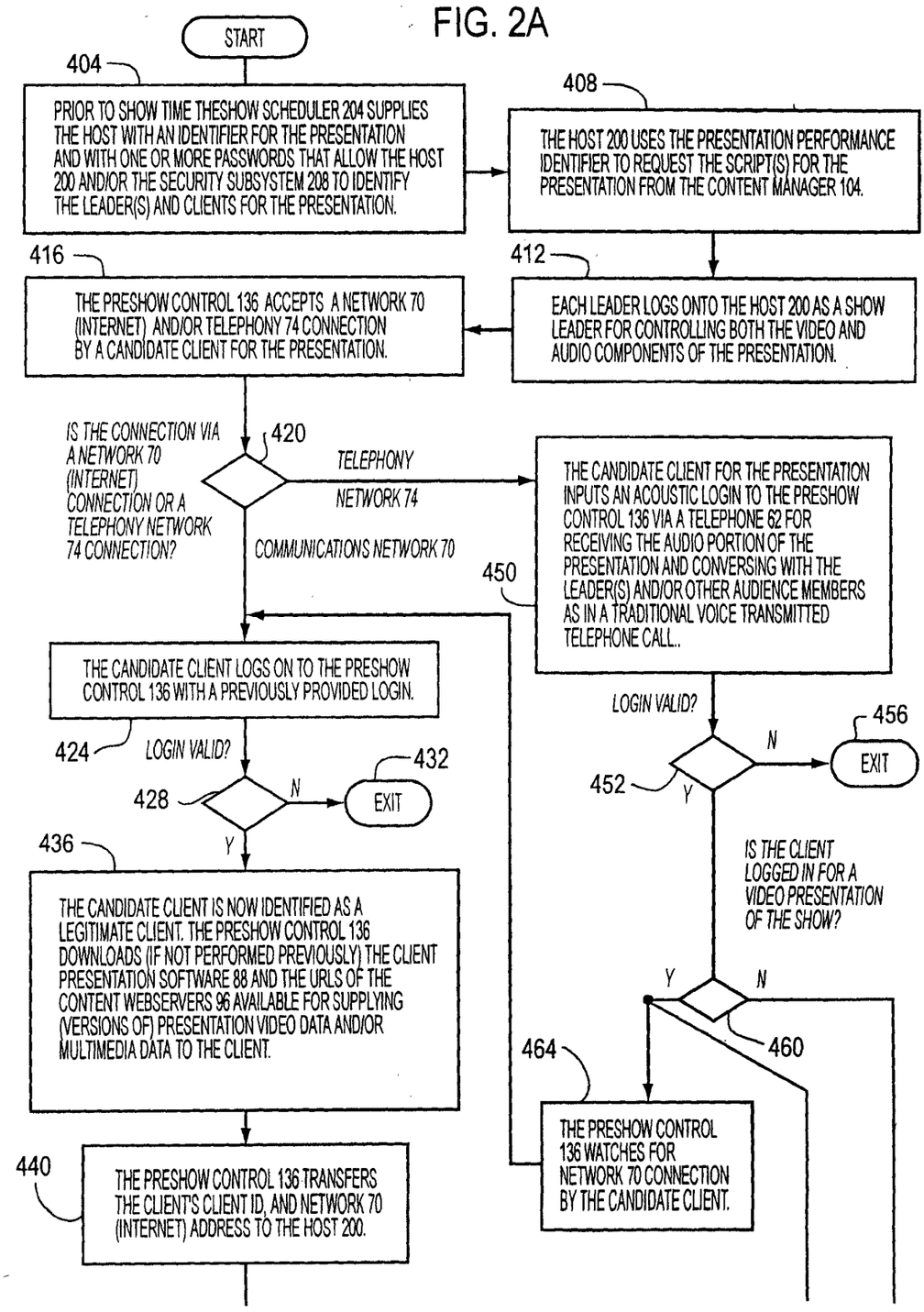
START
404
PRIOR TO SHOW TIME THESHOW SCHEDULER 204 SUPPLIES THE HOST WITH AN IDENTIFIER FOR THE PRESENTATION AND WITH ONE OR MORE PASSWORDS THAT ALLOW THE HOST 200 AND/OR THE SECURITY SUBSYSTEM 208 TO IDENTIFY THE LEADER(S) AND CLIENTS FOR THE PRESENTATION.
408
THE HOST 200 USES THE PRESENTATION PERFORMANCE IDENTIFIER TO REQUEST THE SCRIPT(S) FOR THE PRESENTATION FROM THE CONTENT MANAGER 104.
416
THE PRESHOW CONTROL 136 ACCEPTS A NETWORK 70 (INTERNET) AND/OR TELEPHONY 74 CONNECTION BY A CANDIDATE CLIENT FOR THE PRESENTATION.
412
EACH LEADER LOGS ONTO THE HOST 200 AS A SHOW LEADER FOR CONTROLLING BOTH THE VIDEO AND AUDIO COMPONENTS OF THE PRESENTATION.
IS THE CONNECTION VIA A NETWORK 70 (INTERNET) CONNECTION OR A TELEPHONY NETWORK 74 CONNECTION?
420
TELEPHONY NETWORK 74
COMMUNICATIONS NETWORK 70
THE CANDIDATE CLIENT FOR THE PRESENTATION INPUTS AN ACOUSTIC LOGIN TO THE PRESHOW CONTROL 136 VIA A TELEPHONE 62 FOR RECEIVING THE AUDIO PORTION OF THE PRESENTATION AND CONVERSING WITH THE LEADER(S) AND/OR OTHER AUDIENCE MEMBERS AS IN A TRADITIONAL VOICE TRANSMITTED TELEPHONE CALL..
450
THE CANDIDATE CLIENT LOGS ON TO THE PRESHOW CONTROL 136 WITH A PREVIOUSLY PROVIDED LOGIN.
424
LOGIN VALID?
428
N
EXIT
432
Y
LOGIN VALID?
452
N
EXIT
456
Y
IS THE CLIENT LOGGED IN FOR A VIDEO PRESENTATION OF THE SHOW?
Y
N
460
436
THE CANDIDATE CLIENT IS NOW IDENTIFIED AS A LEGITIMATE CLIENT. THE PRESHOW CONTROL 136 DOWNLOADS (IF NOT PERFORMED PREVIOUSLY) THE CLIENT PRESENTATION SOFTWARE 88 AND THE URLS OF THE CONTENT WEBSERVERS 96 AVAILABLE FOR SUPPLYING (VERSIONS OF) PRESENTATION VIDEO DATA AND/OR MULTIMEDIA DATA TO THE CLIENT.
464
THE PRESHOW CONTROL 136 WATCHES FOR NETWORK 70 CONNECTION BY THE CANDIDATE CLIENT.
440
THE PRESHOW CONTROL 136 TRANSFERS THE CLIENT'S CLIENT ID, AND NETWORK 70 (INTERNET) ADDRESS TO THE HOST 200.

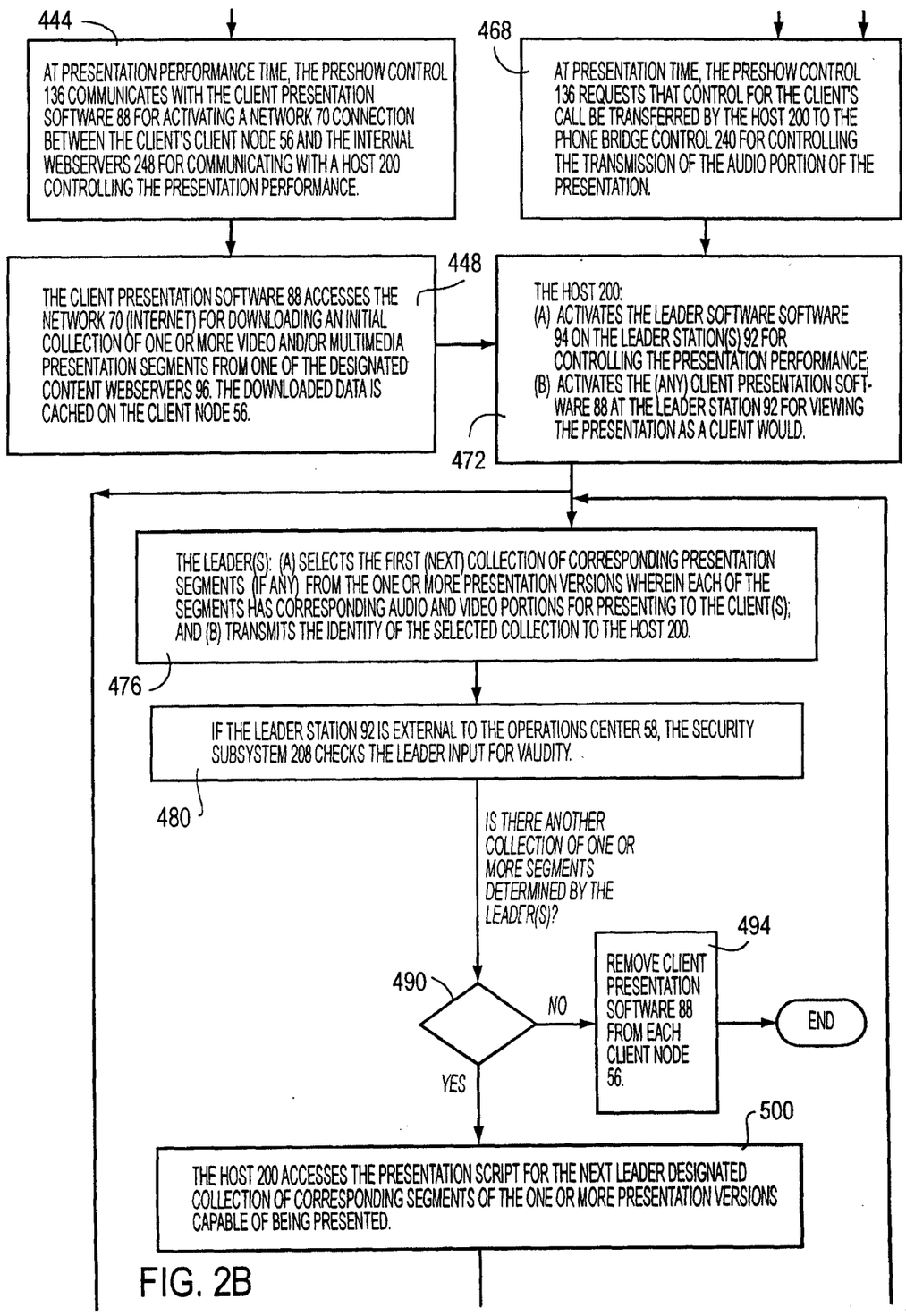
444
AT PRESENTATION PERFORMANCE TIME, THE PRESHOW CONTROL 136 COMMUNICATES WITH THE CLIENT PRESENTATION SOFTWARE 88 FOR ACTIVATING A NETWORK 70 CONNECTION BETWEEN THE CLIENT'S CLIENT NODE 56 AND THE INTERNAL WEBSERVERS 248 FOR COMMUNICATING WITH A HOST 200 CONTROLLING THE PRESENTATION PERFORMANCE.
468
AT PRESENTATION TIME, THE PRESHOW CONTROL 136 REQUESTS THAT CONTROL FOR THE CLIENT'S CALL BE TRANSFERRED BY THE HOST 200 TO THE PHONE BRIDGE CONTROL 240 FOR CONTROLLING THE TRANSMISSION OF THE AUDIO PORTION OF THE PRESENTATION.
448
THE CLIENT PRESENTATION SOFTWARE 88 ACCESSES THE NETWORK 70 (INTERNET) FOR DOWNLOADING AN INITIAL COLLECTION OF ONE OR MORE VIDEO AND/OR MULTIMEDIA PRESENTATION SEGMENTS FROM ONE OF THE DESIGNATED CONTENT WEBSERVERS 96. THE DOWNLOADED DATA IS CACHED ON THE CLIENT NODE 56.
THE HOST 200:
(A) ACTIVATES THE LEADER SOFTWARE SOFTWARE 94 ON THE LEADER STATION(S) 92 FOR CONTROLLING THE PRESENTATION PERFORMANCE;
(B) ACTIVATES THE (ANY) CLIENT PRESENTATION SOFTWARE 88 AT THE LEADER STATION 92 FOR VIEWING THE PRESENTATION AS A CLIENT WOULD.
472
THE LEADER(S): (A) SELECTS THE FIRST (NEXT) COLLECTION OF CORRESPONDING PRESENTATION SEGMENTS (IF ANY) FROM THE ONE OR MORE PRESENTATION VERSIONS WHEREIN EACH OF THE SEGMENTS HAS CORRESPONDING AUDIO AND VIDEO PORTIONS FOR PRESENTING TO THE CLIENT(S); AND (B) TRANSMITS THE IDENTITY OF THE SELECTED COLLECTION TO THE HOST 200.
476
IF THE LEADER STATION 92 IS EXTERNAL TO THE OPERATIONS CENTER 58, THE SECURITY SUBSYSTEM 208 CHECKS THE LEADER INPUT FOR VALIDITY.
480
IS THERE ANOTHER COLLECTION OF ONE OR MORE SEGMENTS DETERMINED BY THE LEADER(S)?
490
NO
YES
494
REMOVE CLIENT PRESENTATION SOFTWARE 88 FROM EACH CLIENT NODE 56.
END
500
THE HOST 200 ACCESSES THE PRESENTATION SCRIPT FOR THE NEXT LEADER DESIGNATED COLLECTION OF CORRESPONDING SEGMENTS OF THE ONE OR MORE PRESENTATION VERSIONS CAPABLE OF BEING PRESENTED.

FIG. 2B

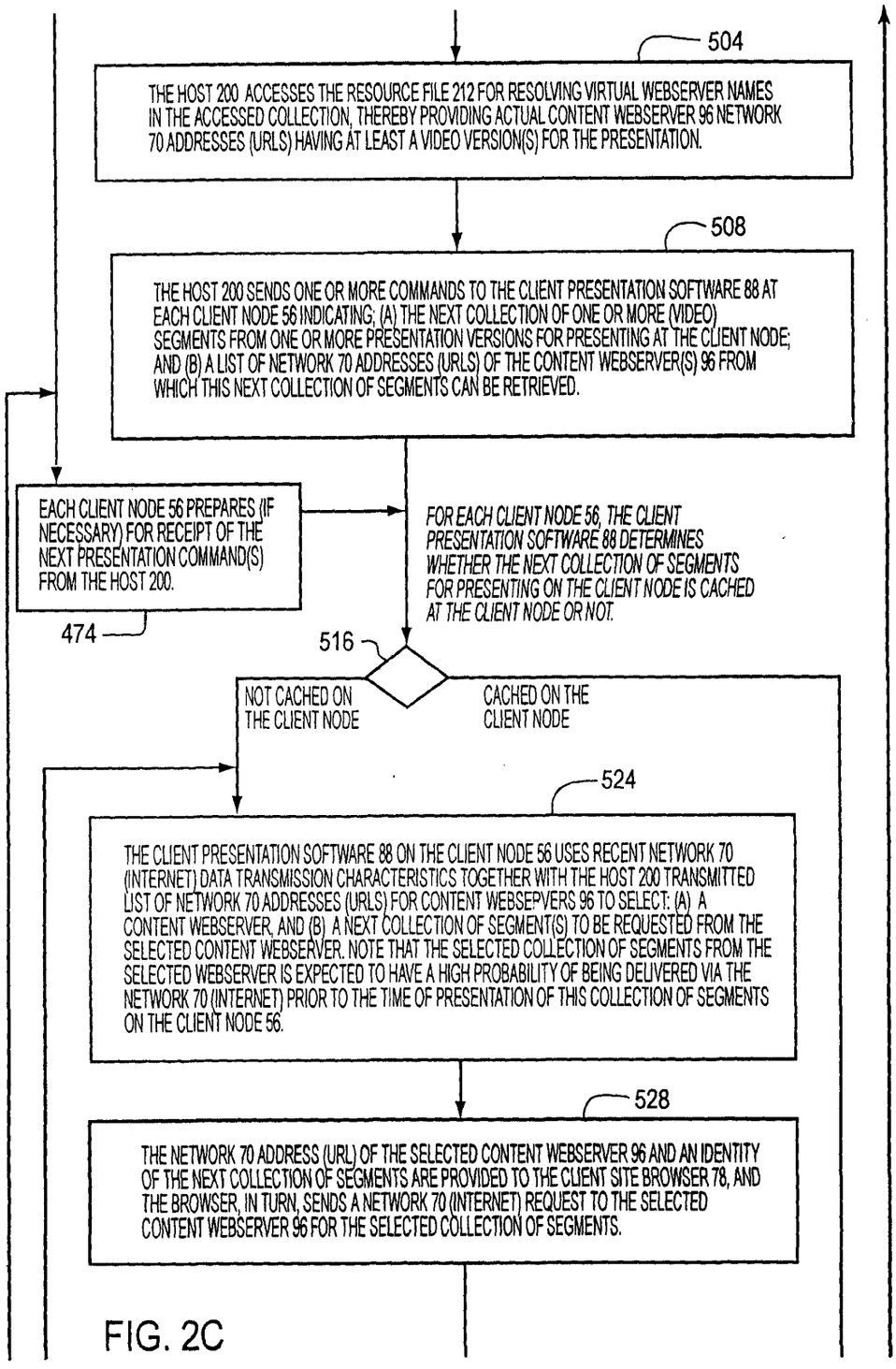
504
THE HOST 200 ACCESSES THE RESOURCE FILE 212 FOR RESOLVING VIRTUAL WEBSERVER NAMES IN THE ACCESSED COLLECTION, THEREBY PROVIDING ACTUAL CONTENT WEBSERVER 96 NETWORK 70 ADDRESSES (URLS) HAVING AT LEAST A VIDEO VERSION(S) FOR THE PRESENTATION.
508
THE HOST 200 SENDS ONE OR MORE COMMANDS TO THE CLIENT PRESENTATION SOFTWARE 88 AT EACH CLIENT NODE 56 INDICATING; (A) THE NEXT COLLECTION OF ONE OR MORE (VIDEO) SEGMENTS FROM ONE OR MORE PRESENTATION VERSIONS FOR PRESENTING AT THE CLIENT NODE; AND (B) A LIST OF NETWORK 70 ADDRESSES (URLS) OF THE CONTENT WEBSERVER(S) 96 FROM WHICH THIS NEXT COLLECTION OF SEGMENTS CAN BE RETRIEVED.
EACH CLIENT NODE 56 PREPARES (IF NECESSARY) FOR RECEIPT OF THE NEXT PRESENTATION COMMAND(S) FROM THE HOST 200.
474
FOR EACH CLIENT NODE 56, THE CLIENT PRESENTATION SOFTWARE 88 DETERMINES WHETHER THE NEXT COLLECTION OF SEGMENTS FOR PRESENTING ON THE CLIENT NODE IS CACHED AT THE CLIENT NODE OR NOT.
516
NOT CACHED ON THE CLIENT NODE
CACHED ON THE CLIENT NODE
524
THE CLIENT PRESENTATION SOFTWARE 88 ON THE CLIENT NODE 56 USES RECENT NETWORK 70 (INTERNET) DATA TRANSMISSION CHARACTERISTICS TOGETHER WITH THE HOST 200 TRANSMITTED LIST OF NETWORK 70 ADDRESSES (URLS) FOR CONTENT WEBSEPVERS 96 TO SELECT: (A) A CONTENT WEBSERVER, AND (B) A NEXT COLLECTION OF SEGMENT(S) TO BE REQUESTED FROM THE SELECTED CONTENT WEBSERVER. NOTE THAT THE SELECTED COLLECTION OF SEGMENTS FROM THE SELECTED WEBSERVER IS EXPECTED TO HAVE A HIGH PROBABILITY OF BEING DELIVERED VIA THE NETWORK 70 (INTERNET) PRIOR TO THE TIME OF PRESENTATION OF THIS COLLECTION OF SEGMENTS ON THE CLIENT NODE 56.
528
THE NETWORK 70 ADDRESS (URL) OF THE SELECTED CONTENT WEBSERVER 96 AND AN IDENTITY OF THE NEXT COLLECTION OF SEGMENTS ARE PROVIDED TO THE CLIENT SITE BROWSER 78, AND THE BROWSER, IN TURN, SENDS A NETWORK 70 (INTERNET) REQUEST TO THE SELECTED CONTENT WEBSERVER 96 FOR THE SELECTED COLLECTION OF SEGMENTS.

FIG. 2C

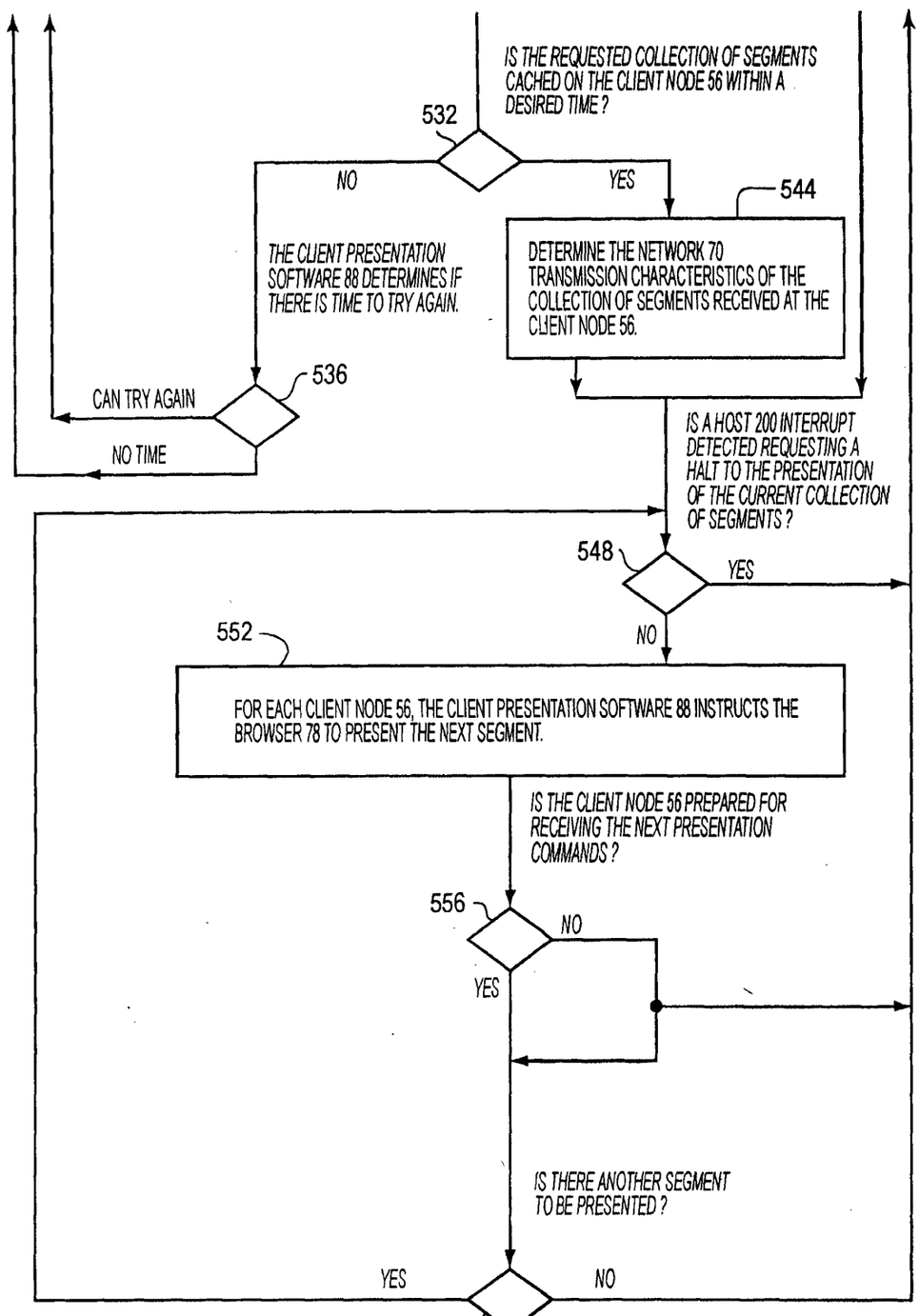
IS THE REQUESTED COLLECTION OF SEGMENTS CACHED ON THE CLIENT NODE 56 WITHIN A DESIRED TIME ?
532
NO
YES
544
THE CLIENT PRESENTATION SOFTWARE 88 DETERMINES IF THERE IS TIME TO TRY AGAIN.
DETERMINE THE NETWORK 70 TRANSMISSION CHARACTERISTICS OF THE COLLECTION OF SEGMENTS RECEIVED AT THE CLIENT NODE 56.
536
CAN TRY AGAIN
NO TIME
IS A HOST 200 INTERRUPT DETECTED REQUESTING A HALT TO THE PRESENTATION OF THE CURRENT COLLECTION OF SEGMENTS ?
548
YES
NO
552
FOR EACH CLIENT NODE 56, THE CLIENT PRESENTATION SOFTWARE 88 INSTRUCTS THE BROWSER 78 TO PRESENT THE NEXT SEGMENT.
IS THE CLIENT NODE 56 PREPARED FOR RECEIVING THE NEXT PRESENTATION COMMANDS ?
556
NO
YES
IS THERE ANOTHER SEGMENT TO BE PRESENTED ?
YES
NO
560

FIG. 2D

600

	612 SCRIPT LEVEL	616 ITEM #	620 VIRTUAL TIME HR:MIN:SEC	624 ACTION	632 RESOURCE TYPE	636 RESOURCE LOCATION	640 RESOURCE NAME
608a	1	1	0.00	Client_Load	FTP File	Server Name (SN)	Path + File *
608b	2				FTP Dir	Server Name	Path
608c	3			client_Free	FTP File	"TWFTP"	File
608d	1,2			client_Display	HTML_File	SN | TWFTP | CD| LOCAL	Path + File | File *
608e	1,3	2	1:01.00		MC_Question	SN | TWFTP | CD| LOCAL	Path + File | File *
608f	2,3				MC_Answer	SN | TWFTP | CD| LOCAL	Path + File | File *
608g	1,2,3				Info_Form	SN | TWFTP | CD| LOCAL	Path + File | File *
608h	1,2,3			client_Play	Audio_RaFile	Server Name	Path + File *
608i	1,2,3				Audio_RaLive	Server Name	Encoder Task
608j	1,2,3		0.00	leader_Hold	———	———	———
608k	1,2,3			time_Set_At	"THIS LINE"	———	———
608l	1,2,3			time_Hold_To	HTML_File	"END" | "GOT"	———
608m	1,2,3				Audio_RaFile	"END"	———
608n	1,2,3			child_Script	TW script	"this"	Path + File
608o	1,2,3			End_Start	———	———	———
608p	1,2,3	999		END	———	———	———
608q	END						

FIG. 3

File History Content Report

The following content is missing from the original file history record obtained from the United States Patent and Trademark Office. No additional information is available.

Document Date - 2000-12-12

Document Title - USPTO Grant

This page is not part of the official USPTO record. It has been determined that content identified on this document is missing from the original file history record.

IN THE UNITED STATES PATENT AND TRADEMARK OFFICE

Patent No.	:	6,161,137
Applicant	:	Frank E. Johnson
Issued	:	December 12, 2000
Title	:	Method and System for Providing A Presentation On A Network
Docket No.	:	PAT-057
Customer No.	:	67670

NOTIFICATION OF LOSS OF ENTITLEMENT TO SMALL ENTITY STATUS UNDER 37 C.F.R. 1.27(g)(2) AND CORRECTION OF DEFICIENCY OWED UNDER MPEP 5.05(X)

Sir:

Applicant hereby notifies the Patent and Trademark Office that it is no longer entitled to status as a small entity and that the claim for small entity status is hereby withdrawn. Please change the status of this patent matter to large entity.

On January 21, 2008, the 8th year maintenance fee was paid as a small entity in the amount of $1,180.00. As the Applicant's status has changed to a large entity, the Commissioner is hereby authorized to charge the deficiency of $1,670.00 to Deposit Account 501880.

Large entity fee amount for 7.5 Year Maintenance	$2,850.00
Fee paid as small entity on 1/21/2008	$1,180.00
Deficiency	$1,670.00

The Commissioner is hereby authorized to charge any additional fees which may be required, or credit any overpayment to Deposit Account No. 501880 referencing Attorney Docket No. PAT-057.

Respectfully submitted,
INTERCALL, INC.

Date: May 8, 2012

By: /Raffi Gostanian/
Raffi Gostanian
Reg. No. 42,595
Tel: (972) 849-1310

05/09/2012 DALLEN 00000005 501880 6161137
01 FC:1599 1670.00 DA

CERTIFICATE OF MAILING OR TRANSMISSION

I hereby certify that this paper (along with any referred to as being attached or enclosed) is being facsimile transmitted to 571-273-6500 to the USPTO; attention: Maintenance Fee on the date shown below.

May 8, 2012
Date of Deposit

/Tom Tilden/
Signature

IN THE UNITED STATES PATENT AND TRADEMARK OFFICE

Patent No.	:	6,161,137
Applicant	:	Frank E. Johnson
Issued	:	December 12, 2000
Title	:	Method and System for Providing A Presentation On A Network
Docket No.	:	PAT-057
Customer No.	:	67670

NOTIFICATION OF LOSS OF ENTITLEMENT TO SMALL ENTITY STATUS UNDER 37 C.F.R. 1.27(g)(2) AND CORRECTION OF DEFICIENCY OWED UNDER MPEP 5.05(X)

Sir:

Applicant hereby notifies the Patent and Trademark Office that it is no longer entitled to status as a small entity and that the claim for small entity status is hereby withdrawn. Please change the status of this patent matter to large entity.

On January 21, 2008, the 8th year maintenance fee was paid as a small entity in the amount of $1,180.00. As the Applicant's status has changed to a large entity, the Commissioner is hereby authorized to charge the deficiency of $1,670.00 to Deposit Account 501880.

Large entity fee amount for 7.5 Year Maintenance	$2,850.00
Fee paid as small entity on 1/21/2008	$1,180.00
Deficiency	$1,670.00

The Commissioner is hereby authorized to charge any additional fees which may be required, or credit any overpayment to Deposit Account No. 501880 referencing Attorney Docket No. PAT-057.

Respectfully submitted,
INTERCALL, INC.

Date: May 8, 2012

By: /Raffi Gostanian/
Raffi Gostanian
Reg. No. 42,595
Tel: (972) 849-1310

CERTIFICATE OF MAILING OR TRANSMISSION

I hereby certify that this paper (along with any referred to as being attached or enclosed) is being facsimile transmitted to 571-273-6500 to the USPTO; attention: Maintenance Fee on the date shown below.

May 8, 2012
Date of Deposit

/Tom Tilden/
Signature

Electronic Acknowledgement Receipt

EFS ID:	12900332
Application Number:	09052862
International Application Number:	
Confirmation Number:	9604
Title of Invention:	METHOD AND SYSTEM FOR PROVIDING A PRESENTATION ON A NETWORK
First Named Inventor/Applicant Name:	FRANK E. JOHNSON
Customer Number:	22442
Filer:	Michael B. Johannesen/Tom Tilden
Filer Authorized By:	Michael B. Johannesen
Attorney Docket Number:	5063-1
Receipt Date:	31-MAY-2012
Filing Date:	31-MAR-1998
Time Stamp:	12:16:00
Application Type:	Utility under 35 USC 111(a)

Payment information:

Submitted with Payment	no

File Listing:

Document Number	Document Description	File Name	File Size(Bytes)/ Message Digest	Multi Part /.zip	Pages (if appl.)
1	Assignee showing of ownership per 37 CFR 3.73(b).	sb0096.pdf	422731 d0575a5ba58b15703220c542c000677e6f2e0309	no	2

Warnings:

Information:

2	Power of Attorney	sb0081a_POA_Patents.pdf	735602 572801c84c860163e985bd937972b593997bfeae	no	2
Warnings:					
Information:					
			Total Files Size (in bytes):	1158333	

This Acknowledgement Receipt evidences receipt on the noted date by the USPTO of the indicated documents, characterized by the applicant, and including page counts, where applicable. It serves as evidence of receipt similar to a Post Card, as described in MPEP 503.

New Applications Under 35 U.S.C. 111
If a new application is being filed and the application includes the necessary components for a filing date (see 37 CFR 1.53(b)-(d) and MPEP 506), a Filing Receipt (37 CFR 1.54) will be issued in due course and the date shown on this Acknowledgement Receipt will establish the filing date of the application.

National Stage of an International Application under 35 U.S.C. 371
If a timely submission to enter the national stage of an international application is compliant with the conditions of 35 U.S.C. 371 and other applicable requirements a Form PCT/DO/EO/903 indicating acceptance of the application as a national stage submission under 35 U.S.C. 371 will be issued in addition to the Filing Receipt, in due course.

New International Application Filed with the USPTO as a Receiving Office
If a new international application is being filed and the international application includes the necessary components for an international filing date (see PCT Article 11 and MPEP 1810), a Notification of the International Application Number and of the International Filing Date (Form PCT/RO/105) will be issued in due course, subject to prescriptions concerning national security, and the date shown on this Acknowledgement Receipt will establish the international filing date of the application.

PTO/SB/96 (07-09)
Approved for use through 07/31/2012. OMB 0651-0031
U.S. Patent and Trademark Office; U.S. DEPARTMENT OF COMMERCE
Under the Paperwork Reduction Act of 1995, no persons are required to respond to a collection of information unless it displays a valid OMB control number.

STATEMENT UNDER 37 CFR 3.73(b)

Applicant/Patent Owner: West Corporation

Application No./Patent No.: 6,161,137 Filed/Issue Date: December 12, 2000

Titled:
METHOD AND SYSTEM FOR PROVIDING A PRESENTATION ON A NETWORK

West Corporation, a Corporation
(Name of Assignee) (Type of Assignee, e.g., corporation, partnership, university, government agency, etc.

states that it is:

1. ☒ the assignee of the entire right, title, and interest in;

2. ☐ an assignee of less than the entire right, title, and interest in
(The extent (by percentage) of its ownership interest is _____ %); or

3. ☐ the assignee of an undivided interest in the entirety of (a complete assignment from one of the joint inventors was made)

the patent application/patent identified above, by virtue of either:

A. ☒ An assignment from the inventor(s) of the patent application/patent identified above. The assignment was recorded in the United States Patent and Trademark Office at Reel 015896, Frame 0249, or for which a copy therefore is attached.

OR

B. ☐ A chain of title from the inventor(s), of the patent application/patent identified above, to the current assignee as follows:

1. From: _____ To: _____
The document was recorded in the United States Patent and Trademark Office at
Reel _____, Frame _____, or for which a copy thereof is attached.

2. From: _____ To: _____
The document was recorded in the United States Patent and Trademark Office at
Reel _____, Frame _____, or for which a copy thereof is attached.

3. From: _____ To: _____
The document was recorded in the United States Patent and Trademark Office at
Reel _____, Frame _____, or for which a copy thereof is attached.

☐ Additional documents in the chain of title are listed on a supplemental sheet(s).

☒ As required by 37 CFR 3.73(b)(1)(i), the documentary evidence of the chain of title from the original owner to the assignee was, or concurrently is being, submitted for recordation pursuant to 37 CFR 3.11.

[NOTE: A separate copy (*i.e.*, a true copy of the original assignment document(s)) must be submitted to Assignment Division in accordance with 37 CFR Part 3, to record the assignment in the records of the USPTO. See MPEP 302.08]

The undersigned (whose title is supplied below) is authorized to act on behalf of the assignee.

/David C. Mussman/ May 31, 2012
Signature Date

David C. Mussman Secretary
Printed or Typed Name Title

This collection of information is required by 37 CFR 3.73(b). The information is required to obtain or retain a benefit by the public which is to file (and by the USPTO to process) an application. Confidentiality is governed by 35 U.S.C. 122 and 37 CFR 1.11 and 1.14. This collection is estimated to take 12 minutes to complete, including gathering, preparing, and submitting the completed application form to the USPTO. Time will vary depending upon the individual case. Any comments on the amount of time you require to complete this form and/or suggestions for reducing this burden, should be sent to the Chief Information Officer, U.S. Patent and Trademark Office, U.S. Department of Commerce, P.O. Box 1450, Alexandria, VA 22313-1450. DO NOT SEND FEES OR COMPLETED FORMS TO THIS ADDRESS. **SEND TO: Commissioner for Patents, P.O. Box 1450, Alexandria, VA 22313-1450.**

If you need assistance in completing the form, call 1-800-PTO-9199 and select option 2.

Privacy Act Statement

The **Privacy Act of 1974 (P.L. 93-579)** requires that you be given certain information in connection with your submission of the attached form related to a patent application or patent. Accordingly, pursuant to the requirements of the Act, please be advised that: (1) the general authority for the collection of this information is 35 U.S.C. 2(b)(2); (2) furnishing of the information solicited is voluntary; and (3) the principal purpose for which the information is used by the U.S. Patent and Trademark Office is to process and/or examine your submission related to a patent application or patent. If you do not furnish the requested information, the U.S. Patent and Trademark Office may not be able to process and/or examine your submission, which may result in termination of proceedings or abandonment of the application or expiration of the patent.

The information provided by you in this form will be subject to the following routine uses:

1. The information on this form will be treated confidentially to the extent allowed under the Freedom of Information Act (5 U.S.C. 552) and the Privacy Act (5 U.S.C 552a). Records from this system of records may be disclosed to the Department of Justice to determine whether disclosure of these records is required by the Freedom of Information Act.
2. A record from this system of records may be disclosed, as a routine use, in the course of presenting evidence to a court, magistrate, or administrative tribunal, including disclosures to opposing counsel in the course of settlement negotiations.
3. A record in this system of records may be disclosed, as a routine use, to a Member of Congress submitting a request involving an individual, to whom the record pertains, when the individual has requested assistance from the Member with respect to the subject matter of the record.
4. A record in this system of records may be disclosed, as a routine use, to a contractor of the Agency having need for the information in order to perform a contract. Recipients of information shall be required to comply with the requirements of the Privacy Act of 1974, as amended, pursuant to 5 U.S.C. 552a(m).
5. A record related to an International Application filed under the Patent Cooperation Treaty in this system of records may be disclosed, as a routine use, to the International Bureau of the World Intellectual Property Organization, pursuant to the Patent Cooperation Treaty.
6. A record in this system of records may be disclosed, as a routine use, to another federal agency for purposes of National Security review (35 U.S.C. 181) and for review pursuant to the Atomic Energy Act (42 U.S.C. 218(c)).
7. A record from this system of records may be disclosed, as a routine use, to the Administrator, General Services, or his/her designee, during an inspection of records conducted by GSA as part of that agency's responsibility to recommend improvements in records management practices and programs, under authority of 44 U.S.C. 2904 and 2906. Such disclosure shall be made in accordance with the GSA regulations governing inspection of records for this purpose, and any other relevant (*i.e.*, GSA or Commerce) directive. Such disclosure shall not be used to make determinations about individuals.
8. A record from this system of records may be disclosed, as a routine use, to the public after either publication of the application pursuant to 35 U.S.C. 122(b) or issuance of a patent pursuant to 35 U.S.C. 151. Further, a record may be disclosed, subject to the limitations of 37 CFR 1.14, as a routine use, to the public if the record was filed in an application which became abandoned or in which the proceedings were terminated and which application is referenced by either a published application, an application open to public inspection or an issued patent.
9. A record from this system of records may be disclosed, as a routine use, to a Federal, State, or local law enforcement agency, if the USPTO becomes aware of a violation or potential violation of law or regulation.

PTO/SB/81A (12-08)
Approved for use through 11/30/2011. OMB 0651-0035
U.S. Patent and Trademark Office; U.S. DEPARTMENT OF COMMERCE
Under the Paperwork Reduction Act of 1995, no persons are required to respond to a collection of information unless it displays a valid OMB control number.

PATENT - POWER OF ATTORNEY OR REVOCATION OF POWER OF ATTORNEY WITH A NEW POWER OF ATTORNEY AND CHANGE OF CORRESPONDENCE ADDRESS

Patent Number	6,161,137
Issue Date	12/12/2000
First Named Inventor	OGDON, Robert H.
Title	METHOD AND SYSTEM FOR PROVIDING A PRESENTATION ON A NETWORK
Attorney Docket Number	PAT-057

I hereby revoke all previous powers of attorney given in the above-identified patent.

☐ A Power of Attorney is submitted herewith.

OR

☒ I hereby appoint Practitioner(s) associated with the following Customer Number as my/our attorney(s) or agent(s) with respect to the patent identified above, and to transact all business in the United States Patent and Trademark Office connected therewith: 29129

OR

☐ I hereby appoint Practitioner(s) named below as my/our attorney(s) or agent(s) with respect to the patent identified above, and to transact all business in the United States Patent and Trademark Office connected therewith:

Practitioner(s) Name	Registration Number

Please recognize or change the correspondence address for the above-identified patent to:

☒ The address associated with the above-mentioned Customer Number.

OR

☐ The address associated with Customer Number:

OR

☐ Firm or Individual Name					
Address					
City		State		Zip	
Country					
Telephone		Email			

I am the:

☐ Inventor, having ownership of the patent.

OR

☒ Patent owner.
Statement under 37 CFR 3.73(b) (Form PTO/SB/96) submitted herewith or filed on _____.

SIGNATURE of Inventor or Patent Owner

Signature	/David C. Mussman/	Date	May 31, 2012
Name	David C. Mussman	Telephone	402-965-7077
Title and Company	Secretary, West Corporation		

NOTE: Signatures of all the inventors or patent owners of the entire interest or their representative(s) are required. Submit multiple forms if more than one signature is required, see below*.

☐ *Total of _____ forms are submitted.

This collection of information is required by 37 CFR 1.31, 1.32 and 1.33. The information is required to obtain or retain a benefit by the public which is to file (and by the USPTO to process) an application. Confidentiality is governed by 35 U.S.C. 122 and 37 CFR 1.11 and 1.14. This collection is estimated to take 3 minutes to complete, including gathering, preparing, and submitting the completed application form to the USPTO. Time will vary depending upon the individual case. Any comments on the amount of time you require to complete this form and/or suggestions for reducing this burden, should be sent to the Chief Information Officer, U.S. Patent and Trademark Office, U.S. Department of Commerce, P.O. Box 1450, Alexandria, VA 22313-1450. DO NOT SEND FEES OR COMPLETED FORMS TO THIS ADDRESS. **SEND TO: Commissioner for Patents, P.O. Box 1450, Alexandria, VA 22313-1450.**

If you need assistance in completing the form, call 1-800-PTO-9199 and select option 2.

Privacy Act Statement

The **Privacy Act of 1974 (P.L. 93-579)** requires that you be given certain information in connection with your submission of the attached form related to a patent application or patent. Accordingly, pursuant to the requirements of the Act, please be advised that: (1) the general authority for the collection of this information is 35 U.S.C. 2(b)(2); (2) furnishing of the information solicited is voluntary; and (3) the principal purpose for which the information is used by the U.S. Patent and Trademark Office is to process and/or examine your submission related to a patent application or patent. If you do not furnish the requested information, the U.S. Patent and Trademark Office may not be able to process and/or examine your submission, which may result in termination of proceedings or abandonment of the application or expiration of the patent.

The information provided by you in this form will be subject to the following routine uses:

1. The information on this form will be treated confidentially to the extent allowed under the Freedom of Information Act (5 U.S.C. 552) and the Privacy Act (5 U.S.C 552a). Records from this system of records may be disclosed to the Department of Justice to determine whether disclosure of these records is required by the Freedom of Information Act.
2. A record from this system of records may be disclosed, as a routine use, in the course of presenting evidence to a court, magistrate, or administrative tribunal, including disclosures to opposing counsel in the course of settlement negotiations.
3. A record in this system of records may be disclosed, as a routine use, to a Member of Congress submitting a request involving an individual, to whom the record pertains, when the individual has requested assistance from the Member with respect to the subject matter of the record.
4. A record in this system of records may be disclosed, as a routine use, to a contractor of the Agency having need for the information in order to perform a contract. Recipients of information shall be required to comply with the requirements of the Privacy Act of 1974, as amended, pursuant to 5 U.S.C. 552a(m).
5. A record related to an International Application filed under the Patent Cooperation Treaty in this system of records may be disclosed, as a routine use, to the International Bureau of the World Intellectual Property Organization, pursuant to the Patent Cooperation Treaty.
6. A record in this system of records may be disclosed, as a routine use, to another federal agency for purposes of National Security review (35 U.S.C. 181) and for review pursuant to the Atomic Energy Act (42 U.S.C. 218(c)).
7. A record from this system of records may be disclosed, as a routine use, to the Administrator, General Services, or his/her designee, during an inspection of records conducted by GSA as part of that agency's responsibility to recommend improvements in records management practices and programs, under authority of 44 U.S.C. 2904 and 2906. Such disclosure shall be made in accordance with the GSA regulations governing inspection of records for this purpose, and any other relevant (*i.e.*, GSA or Commerce) directive. Such disclosure shall not be used to make determinations about individuals.
8. A record from this system of records may be disclosed, as a routine use, to the public after either publication of the application pursuant to 35 U.S.C. 122(b) or issuance of a patent pursuant to 35 U.S.C. 151. Further, a record may be disclosed, subject to the limitations of 37 CFR 1.14, as a routine use, to the public if the record was filed in an application which became abandoned or in which the proceedings were terminated and which application is referenced by either a published application, an application open to public inspection or an issued patent.
9. A record from this system of records may be disclosed, as a routine use, to a Federal, State, or local law enforcement agency, if the USPTO becomes aware of a violation or potential violation of law or regulation.

File History Content Report

The following content is missing from the original file history record obtained from the United States Patent and Trademark Office. No additional information is available.

Document Date - 2012-06-05

Document Title - USPTO Communication Re: Change of Address

This page is not part of the official USPTO record. It has been determined that content identified on this document is missing from the original file history record.

IN THE UNITED STATES PATENT AND TRADEMARK OFFICE

Patent No.	:	6,161,137
Applicant	:	Frank E. Johnson
Issued	:	December 12, 2000
Title	:	Method and System for Providing a Presentation on a Network
Docket No.	:	PAT-057
Customer No.	:	29129

NOTIFICATION OF LOSS OF ENTITLEMENT TO SMALL ENTITY STATUS UNDER 37 C.F.R. 1.27(g)(2) AND CORRECTION OF DEFICIENCY OWED UNDER MPEP 5.05(X)

Sir:

Applicant hereby notifies the Patent and Trademark Office that it is no longer entitled to status as a small entity and that the claim for small entity status is hereby withdrawn. Please change the status of this patent matter to large entity.

On June 12, 2012, the 12th year maintenance fee was paid as a small entity in the amount of $2,365.00. As the Applicant's status has changed to a large entity, the Commissioner is hereby authorized to charge the deficiency of $2,365.00 to Deposit Account 501880.

Large entity fee amount for 11.5 Year Maintenance	$4,730.00
Fee paid as small entity on 6/12/2012	$2,365.00
Deficiency	$2,365.00

The Commissioner is hereby authorized to charge any additional fees which may be required, or credit any overpayment to Deposit Account No. 501880 referencing Attorney Docket No. PAT-057.

Respectfully submitted,
INTERCALL, INC.

Date: June 12, 2012

By: /Raffi Gostanian/
Raffi Gostanian
Reg. No. 42,595
Tel: (972) 849-1310

06/14/2012 MBANGURA 00000080 501880 6161137
01 FC:1599 2365.00 DA

CERTIFICATE OF MAILING OR TRANSMISSION

I hereby certify that this paper (along with any referred to as being attached or enclosed) is being facsimile transmitted to571-273-6500 to the USPTO; attention: Maintenance Fee, on the date shown below.

June 12, 2012
Date of Deposit

/Tom Tilden/
Signature

IN THE UNITED STATES PATENT AND TRADEMARK OFFICE

Patent No.	:	6,161,137
Applicant	:	Frank E. Johnson
Issued	:	December 12, 2000
Title	:	Method and System for Providing A Presentation On A Network
Docket No.	:	PAT-057
Customer No.	:	67670

NOTIFICATION OF LOSS OF ENTITLEMENT TO SMALL ENTITY STATUS UNDER 37 C.F.R. 1.27(g)(2) AND CORRECTION OF DEFICIENCY OWED UNDER MPEP 5.05(X)

Sir:

Applicant hereby notifies the Patent and Trademark Office that it is no longer entitled to status as a small entity and that the claim for small entity status is hereby withdrawn. Please change the status of this patent matter to large entity.

On January 21, 2008, the 8th year maintenance fee was paid as a small entity in the amount of $1,180.00. As the Applicant's status has changed to a large entity, the Commissioner is hereby authorized to charge the deficiency of $1,670.00 to Deposit Account 501880.

Large entity fee amount for 7.5 Year Maintenance	$2,850.00
Fee paid as small entity on 1/21/2008	$1,180.00
Deficiency	$1,670.00

The Commissioner is hereby authorized to charge any additional fees which may be required, or credit any overpayment to Deposit Account No. 501880 referencing Attorney Docket No. PAT-057.

Respectfully submitted,
INTERCALL, INC.

Date: May 8, 2012

By: /Raffi Gostanian/
Raffi Gostanian
Reg. No. 42,595
Tel: (972) 849-1310

Adjustment Date: 06/18/2012 CKHLOK
06/14/2012 MBANGURA 00000080 501880 6161137
01 FC:1599 2365.00 CR

CERTIFICATE OF MAILING OR TRANSMISSION

I hereby certify that this paper (along with any referred to as being attached or enclosed) is being facsimile transmitted to 571-273-6500 to the USPTO; attention: Maintenance Fee on the date shown below.

May 8, 2012 /Tom Tilden/
Date of Deposit Signature

06/18/2012 CKHLOK 00000011 501880 6161137
2365.00 DA

UNITED STATES PATENT AND TRADEMARK OFFICE

Commissioner for Patents
United States Patent and Trademark Office
P.O. Box 1450
Alexandria, VA 22313-1450
www.uspto.gov

TOM TILDEN
C/O WEST CORPORATION
11808 MIRACLE HILLS DR.
MAIL STOP: W11-LEGAL
OMAHA NE 68154

MAILED
JUN 19 2012
OFFICE OF PETITIONS

In re Patent No. 6,161,137	:	
Issue Date: December 12, 2000	:	
Application No. 09/052,862	:	NOTICE
Filed: March 31, 1998	:	
Attorney Docket No. PAT-057	:	

This is a notice regarding your request for acceptance of a fee deficiency submission under 37 CFR 1.28 filed May 8, 2012. On September 1, 1998, the Court of Appeals for the Federal Circuit held that 37 CFR 1.28(c) is the sole provision governing the time for correction of the erroneous payment of the issue fee as a small entity. **See DH Technology v. Synergystex International, Inc. 154 F.3d 1333, 47 USPQ2d 1865 (Fed. Cir. Sept. 1, 1998).**

The Office no longer investigates or rejects original or reissue applications under 37 CFR 1.56. **1098 Off. Gaz. Pat. Office 502 (January 3, 1989)**. Therefore, nothing in this Notice is intended to imply that an investigation was done.

Your fee deficiency submission under 37 CFR 1.28 is hereby accepted. The petition is **GRANTED**.

This application is no longer entitled to small entity status. Accordingly, all future fees paid in this application must be paid at the large entity rate.

This file is being forwarded to Files Repository.

Telephone inquiries related to this decision should be directed to the Kimberly Inabinet at (571) 272-4618.

/Kimberly Inabinet/
Kimberly Inabinet
Petitions Examiner
Office of Petitions

UNITED STATES PATENT AND TRADEMARK OFFICE

UNITED STATES DEPARTMENT OF COMMERCE
United States Patent and Trademark Office
Address: COMMISSIONER FOR PATENTS
P.O. Box 1450
Alexandria, Virginia 22313-1450
www.uspto.gov

APPLICATION NUMBER	FILING OR 371(C) DATE	FIRST NAMED APPLICANT	ATTY. DOCKET NO./TITLE
09/052,862	03/31/1998	FRANK E. JOHNSON	PAT-057

CONFIRMATION NO. 9604

POA ACCEPTANCE LETTER

OC000000054652972

29129
TOM TILDEN
C/O WEST CORPORATION
11808 MIRACLE HILLS DR.
MAIL STOP: W11-LEGAL
OMAHA, NE 68154

Date Mailed: 09/07/2012

NOTICE OF ACCEPTANCE OF POWER OF ATTORNEY

This is in response to the Power of Attorney filed 05/31/2012.

The Power of Attorney in this application is accepted. Correspondence in this application will be mailed to the above address as provided by 37 CFR 1.33.

/dtvernon/

Office of Data Management, Application Assistance Unit (571) 272-4000, or (571) 272-4200, or 1-888-786-0101

UNITED STATES PATENT AND TRADEMARK OFFICE

UNITED STATES DEPARTMENT OF COMMERCE
United States Patent and Trademark Office
Address: COMMISSIONER FOR PATENTS
P.O. Box 1450
Alexandria, Virginia 22313-1450
www.uspto.gov

APPLICATION NUMBER	FILING OR 371(C) DATE	FIRST NAMED APPLICANT	ATTY. DOCKET NO./TITLE
09/052,862	03/31/1998	FRANK E. JOHNSON	5063-1

CONFIRMATION NO. 9604

POWER OF ATTORNEY NOTICE

22442
Sheridan Ross PC
1560 Broadway
Suite 1200
Denver, CO 80202

OC000000054652890

Date Mailed: 09/07/2012

NOTICE REGARDING CHANGE OF POWER OF ATTORNEY

This is in response to the Power of Attorney filed 05/31/2012.

- The Power of Attorney to you in this application has been revoked by the assignee who has intervened as provided by 37 CFR 3.71. Future correspondence will be mailed to the new address of record(37 CFR 1.33).

/dtvernon/

Office of Data Management, Application Assistance Unit (571) 272-4000, or (571) 272-4200, or 1-888-786-0101

Electronic Acknowledgement Receipt

EFS ID:	18324665
Application Number:	09052862
International Application Number:	
Confirmation Number:	9604
Title of Invention:	METHOD AND SYSTEM FOR PROVIDING A PRESENTATION ON A NETWORK
First Named Inventor/Applicant Name:	FRANK E. JOHNSON
Customer Number:	29129
Filer:	J. Andrew Lowes/Theresa O'Connor
Filer Authorized By:	J. Andrew Lowes
Attorney Docket Number:	PAT-057
Receipt Date:	27-FEB-2014
Filing Date:	31-MAR-1998
Time Stamp:	16:09:11
Application Type:	Utility under 35 USC 111(a)

Payment information:

Submitted with Payment	no

File Listing:

Document Number	Document Description	File Name	File Size(Bytes)/ Message Digest	Multi Part /.zip	Pages (if appl.)
1	Power of Attorney	POA_6161137.pdf	224457 5666b003c4b226f8fce58df5482a22a6d4e69803	no	5

Warnings:

Information:

Total Files Size (in bytes):	224457

This Acknowledgement Receipt evidences receipt on the noted date by the USPTO of the indicated documents, characterized by the applicant, and including page counts, where applicable. It serves as evidence of receipt similar to a Post Card, as described in MPEP 503.

New Applications Under 35 U.S.C. 111
If a new application is being filed and the application includes the necessary components for a filing date (see 37 CFR 1.53(b)-(d) and MPEP 506), a Filing Receipt (37 CFR 1.54) will be issued in due course and the date shown on this Acknowledgement Receipt will establish the filing date of the application.

National Stage of an International Application under 35 U.S.C. 371
If a timely submission to enter the national stage of an international application is compliant with the conditions of 35 U.S.C. 371 and other applicable requirements a Form PCT/DO/EO/903 indicating acceptance of the application as a national stage submission under 35 U.S.C. 371 will be issued in addition to the Filing Receipt, in due course.

New International Application Filed with the USPTO as a Receiving Office
If a new international application is being filed and the international application includes the necessary components for an international filing date (see PCT Article 11 and MPEP 1810), a Notification of the International Application Number and of the International Filing Date (Form PCT/RO/105) will be issued in due course, subject to prescriptions concerning national security, and the date shown on this Acknowledgement Receipt will establish the international filing date of the application.

IN THE UNITED STATES PATENT AND TRADEMARK OFFICE

GENERAL POWER OF ATTORNEY FOR PATENT APPLICATIONS/PATENTS BY ASSIGNEE OF ENTIRE INTEREST INCLUDING CERTIFICATION FOR TAKING ACTION BY ASSIGNEE UNDER 37 CFR 3.73(B)

Commissioner for Patents
P. O. Box 1450
Alexandria, VA 22313-1450

GENERAL POWER OF ATTORNEY

As a representative of the Assignee, **OPEN INVENTION NETWORK, LLC,** a Delaware limited liability company, I hereby revoke all previous powers of attorney and hereby appoint the attorneys, practitioners, and/or agents associated with the Customer Number

84646

to prosecute this application and transact all business in the U.S. Patent and Trademark Office in connection therewith.

Please change and address all correspondence and telephone calls regarding this application to the attorney for applicants under Customer Number

84646

CERTIFICATION FOR TAKING ACTION BY ASSIGNEE OF ENTIRE INTEREST UNDER 37 CFR 3.73(b)

The undersigned representative of the Assignee hereby certifies that **OPEN INVENTION NETWORK, LLC.** is the assignee of the entire right, title and interest in the patent application/patent by virtue of an assignment. A copy of the assignment or other documents in the chain of title (if applicable) is attached.

The undersigned (whose title is supplied below) is hereby authorized to act on behalf of the Assignee.

OPEN INVENTION NETWORK, LLC

1/30/14
Date

Signature:

Typed or Printed Name: Keith Bergelt

Title: CEO

United States Patent and Trademark Office

Home | Site Index | Search | Guides | Contacts | eBusiness | eBiz alerts | News | Help

Assignments on the Web > Patent Query

Patent Assignment Abstract of Title

NOTE:Results display only for issued patents and published applications. For pending or abandoned applications please consult USPTO staff.

Total Assignments: 12

Patent #: 6161137 **Issue Dt:** 12/12/2000 **Application #:** 09052862 **Filing Dt:** 03/31/1998

Inventors: FRANK E. JOHNSON, ROBERT H. OGDON

Title: METHOD AND SYSTEM FOR PROVIDING A PRESENTATION ON A NETWORK

Assignment: 1

Reel/Frame: 009187/0366 **Recorded:** 03/31/1998 **Pages:** 4

Conveyance: ASSIGNMENT OF ASSIGNORS INTEREST (SEE DOCUMENT FOR DETAILS).

Assignors: OGDON, ROBERT H. **Exec Dt:** 03/31/1998

JOHNSON, FRANK E. **Exec Dt:** 03/31/1998

Assignee: BROADBAND ASSOCIATES
SUITE 270
2 WEST DRY CREEK CIRCLE
LITTLETON, COLORADO 80120

Correspondent: SHERIDAN ROSS P.C.
TODD P. BLAKELY
1700 LINCOLN STREET, SUITE 3500
DENVER, CO 80203

Assignment: 2

Reel/Frame: 011078/0370 **Recorded:** 08/28/2000 **Pages:** 4

Conveyance: CHANGE OF NAME (SEE DOCUMENT FOR DETAILS).

Assignor: BROADBAND ASSOCIATES **Exec Dt:** 05/14/1999

Assignee: MSHOW.COM
SUITE 200
1745 SHEA CENTER DR.
HIGHLANDS RANCH, COLORADO 80126

Correspondent: SHERIDAN ROSS P.C.
DENNIS J. DUPRAY, PH.D.
1560 BROADWAY, SUITE 1200
DENVER, COLORADO 80202-5141

Assignment: 3

Reel/Frame: 011390/0546 **Recorded:** 12/22/2000 **Pages:** 6

Conveyance: SECURITY INTEREST (SEE DOCUMENT FOR DETAILS).

Assignor: MSHOW.COM **Exec Dt:** 12/20/2000

Assignee: HOWARD H. LEACH LIVING TRUST U.D.T. 9/5/86 AS AMENDED 5/30/97
SUITE #4310
101 CALIFORNIA STREET
SAN FRANCISCO, CALIFORNIA 94111

Correspondent: GIBSON DUNN & CINTCHER LLP
BRIAN FURGUSON
1801 CALIFORNIA STREET
SUITE 4100
DENVER, COLORADO 80202-2641

fuboTV Media Inc.
Exhibit 1015
Page 355

Assignment: 4

Reel/Frame: 011551/0445 **Recorded:** 02/26/2001 **Pages:** 6

Conveyance: SECURITY AGREEMENT

Assignor: MSHOW.COM, INC. **Exec Dt:** 02/26/2001

Assignees: HOWARD H. LEACH LIVING TRUST, THE, U/T/D/ 9/5/86 AS AMENDED
SUITE 4310
101 CALIFORNIA STREET
SAN FRANCISCO, CALIFORNIA 94111

BLUE CHIP CAPITAL FUND LIMITED PARTNERSHIP
1100 CHIQUITA CENTER
250 EAST FIFTH STREET
CINCINNATI, OHIO 45202

Correspondent: GIBSON, DUNN & CRUTCHER LLP
BRIAN K. FURGASON
1801 CALIFORNIA STREET
SUITE 4100
DENVER, CO 80202-2641

Assignment: 5

Reel/Frame: 014033/0395 **Recorded:** 05/06/2003 **Pages:** 6

Conveyance: BANKRUPTCY ORDER RELEASING ALL LIENS

Assignor: HOWARD H. LEACH LIVING TRUST **Exec Dt:** 04/29/2002

Assignee: MSHOW.COM, INC.
2 WEST DRY CREEK CIRCLE
SUITE 270
LITTLETON, COLORADO 80120

Correspondent: WILLKIE FARR & GALLAGHER
KIM A. WALKER
787 7TH AVENUE
NEW YORK, NY 10019

Assignment: 6

Reel/Frame: 013101/0476 **Recorded:** 07/19/2002 **Pages:** 6

Conveyance: ASSIGNMENT OF ASSIGNORS INTEREST (SEE DOCUMENT FOR DETAILS).

Assignor: MSHOW.COM, INC. **Exec Dt:** 05/10/2002

Assignee: INTERCALL WEB CONFERENCING, INC.
SUITE 400
8420 W. BRYN MAWR, INC.
CHICAGO, ILLINOIS 60631

Correspondent: ALSTON & BIRD LLP
KATHLEEN B. HEBERLEIN, ESQ.
1201 W. PEACHTREE ST.
ATLANTA, GA 30309-3424

Assignment: 7

Reel/Frame: 013791/0889 **Recorded:** 02/25/2003 **Pages:** 10

Conveyance: ASSIGNMENT OF ASSIGNORS INTEREST (SEE DOCUMENT FOR DETAILS).

Assignors: MSHOW.COM **Exec Dt:** 02/19/2003

INTERCALL WEB CONFERENCING, INC. **Exec Dt:** 02/19/2003

Assignees: INTERCALL WEB CONFERENCING, INC.
8420 WEST BRYN MAWR AVENUE, SUITE 400
CHICAGO, ILLINOIS 60631

INTERCALL, INC.
8420 WEST BRYN MAWR AVENUE, SUITE 400
CHICAGO, ILLINOIS 60631

Correspondent: SHERIDAN ROSS P.C.
DENNIS J. DUPRAY

1560 BROADWAY, SUITE 1200
DENVER, CO 80202-5141

Assignment: 8

Reel/Frame: 015147/0926 **Recorded:** 09/21/2004 **Pages:** 3

Conveyance: ASSIGNMENT OF ASSIGNORS INTEREST (SEE DOCUMENT FOR DETAILS).

Assignor: INTERCALL WEB CONFERENCING, INC. **Exec Dt:** 02/19/2003

Assignee: INTERCALL, INC.
8420 WEST BRYN MAWR
SUITE 400
CHICAGO, ILLINOIS 60631

Correspondent: SHERIDAN ROSS P.C.
1560 BROADWAY
SUITE 1200
DENVER, CO 80202-5141

Assignment: 9

Reel/Frame: 015896/0249 **Recorded:** 04/13/2005 **Pages:** 5

Conveyance: ASSIGNMENT OF ASSIGNORS INTEREST (SEE DOCUMENT FOR DETAILS).

Assignor: INTERCALL, INC. **Exec Dt:** 04/07/2005

Assignee: WEST CORPORATION
11808 MIRACLE HILLS DRIVE
MS-W11 LEGAL
OMAHA, NEBRASKA 68154

Correspondent: SHERIDAN ROSS P.C.
1560 BROADWAY
SUITE 1200
DENVER, CO 80202-5141

Assignment: 10

Reel/Frame: 018433/0233 **Recorded:** 10/25/2006 **Pages:** 16

Conveyance: SECURITY AGREEMENT

Assignors: INTERCALL, INC **Exec Dt:** 10/24/2006
INTRADO INC **Exec Dt:** 10/24/2006
WEST CORPORATION **Exec Dt:** 10/24/2006
WEST DIRECT, INC **Exec Dt:** 10/24/2006

Assignee: LEHMAN COMMERCIAL PAPER, INC.
745 SEVENTH AVENUE
NEW YORK, NEW YORK 10019

Correspondent: WEIL, GOTSHAL & MANGES C/O DOUG PLANTE
767 5TH AVENUE
NEW YORK, NY 10153

Assignment: 11

Reel/Frame: 023085/0574 **Recorded:** 08/12/2009 **Pages:** 22

Conveyance: ASSIGNMENT AND ASSUMPTION OF SECURITY

Assignors: WEST CORPORATION **Exec Dt:** 08/10/2009
COSMOSIS CORPORATION **Exec Dt:** 08/10/2009
INTERCALL, INC. **Exec Dt:** 08/10/2009
INTRADO COMMUNICATIONS INC. **Exec Dt:** 08/10/2009
INTRADO COMMUNICATIONS OF VIRGINIA INC. **Exec Dt:** 08/10/2009
INTRADO INC. **Exec Dt:** 08/10/2009
INTRADO INFORMATION SYSTEM HOLDINGS, INC. **Exec Dt:** 08/10/2009
INTRADO COMMAND SYSTEMS, INC. **Exec Dt:** 08/10/2009
GEO911, INC. **Exec Dt:** 08/10/2009
POSITRON PUBLIC SAFETY SYSTEMS CORP. **Exec Dt:** 08/10/2009
MASYS CORPORATION **Exec Dt:** 08/10/2009

NORTHERN CONTACT, INC.	**Exec Dt:** 08/10/2009
TELEVOX SOFTWARE, INCORPORATED	**Exec Dt:** 08/10/2009
WEST ASSET MANAGEMENT, INC.	**Exec Dt:** 08/10/2009
WEST DIRECT II, INC.	**Exec Dt:** 08/10/2009
WEST INTERACTIVE CORPORATION	**Exec Dt:** 08/10/2009
WEST INTERNATIONAL CORPORATION	**Exec Dt:** 08/10/2009
WEST NOTIFICATIONS GROUP, INC.	**Exec Dt:** 08/10/2009
WEST RECEIVABLE SERVICES, INC.	**Exec Dt:** 08/10/2009
WEST BUSINESS SERVICES, LLC	**Exec Dt:** 08/10/2009
WEST DIRECT, LLC	**Exec Dt:** 08/10/2009
WEST FACILITIES, LLC	**Exec Dt:** 08/10/2009
WEST AT HOME, LLC	**Exec Dt:** 08/10/2009
WEST CUSTOMER MANAGEMENT GROUP, LLC	**Exec Dt:** 08/10/2009
ASSET DIRECT MORTGAGE, LLC	**Exec Dt:** 08/10/2009
INTERCALL TELECOM VENTURES, LLC	**Exec Dt:** 08/10/2009
BUYDEBTCO, LLC	**Exec Dt:** 08/10/2009
THE DEBT DEPOT, LLC	**Exec Dt:** 08/10/2009
WEST ASSET PURCHASING, LLC	**Exec Dt:** 08/10/2009
INTRADO INTERNATIONAL, LLC	**Exec Dt:** 08/10/2009
STARGATE MANAGEMENT LLC	**Exec Dt:** 08/10/2009

Assignee: WACHOVIA BANK, NATIONAL ASSOCIATION, AS ADMINISTRATIVE AGENT
1525 W.T. HARRIS BLVD.
MAIL CODE NC 0680
CHARLOTTE, NORTH CAROLINA 28262

Correspondent: CORPORATION SERVICE COMPANY
1090 VERMONT AVENUE NW, SUITE 430
ATTN: JEAN PATERSON
WASHINGTON, DC 20005

Assignment: 12

Reel/Frame: 031775/0861 **Recorded:** 12/12/2013 **Pages:** 6

Conveyance: ASSIGNMENT OF ASSIGNORS INTEREST (SEE DOCUMENT FOR DETAILS).

Assignor: WEST CORPORATION **Exec Dt:** 12/03/2013

Assignee: OPEN INVENTION NETWORK, LLC
RESEARCH TRIANGLE PARK CENTER
4819 EMPEROR BLVD., SUITE 400
DURHAM, NORTH CAROLINA 27703

Correspondent: HAYNES AND BOONE, LLP
2323 VICTORY AVENUE
SUITE 700
DALLAS, TX 75219

Search Results as of: 02/27/2014 03:07 PM
If you have any comments or questions concerning the data displayed, contact PRD / Assignments at 571-272-3350. v.2.3.4
Web interface last modified: Jul 8, 2013 v.2.3.4

| HOME | INDEX| SEARCH | eBUSINESS | CONTACT US | PRIVACY STATEMENT

File History Content Report

The following content is missing from the original file history record obtained from the United States Patent and Trademark Office. No additional information is available.

Document Date - 2014-02-28

Document Title - USPTO Communication Re: Change of Address

This page is not part of the official USPTO record. It has been determined that content identified on this document is missing from the original file history record.

UNITED STATES PATENT AND TRADEMARK OFFICE

UNITED STATES DEPARTMENT OF COMMERCE
United States Patent and Trademark Office
Address: COMMISSIONER FOR PATENTS
P.O. Box 1450
Alexandria, Virginia 22313-1450
www.uspto.gov

APPLICATION NUMBER	FILING OR 371(C) DATE	FIRST NAMED APPLICANT	ATTY. DOCKET NO./TITLE
09/052,862	03/31/1998	FRANK E. JOHNSON	PAT-057

CONFIRMATION NO. 9604

POA ACCEPTANCE LETTER

84646
Haynes and Boone, LLP
IP Docketing
2323 Victory Avenue
Suite 700
Dallas, TX 75219

OC000000066895306

Date Mailed: 03/10/2014

NOTICE OF ACCEPTANCE OF POWER OF ATTORNEY

This is in response to the Power of Attorney filed 02/27/2014.

The Power of Attorney in this application is accepted. Correspondence in this application will be mailed to the above address as provided by 37 CFR 1.33.

/kgebremichael/

Office of Data Management, Application Assistance Unit (571) 272-4000, or (571) 272-4200, or 1-888-786-0101

UNITED STATES PATENT AND TRADEMARK OFFICE

UNITED STATES DEPARTMENT OF COMMERCE
United States Patent and Trademark Office
Address: COMMISSIONER FOR PATENTS
P.O. Box 1450
Alexandria, Virginia 22313-1450
www.uspto.gov

APPLICATION NUMBER	FILING OR 371(C) DATE	FIRST NAMED APPLICANT	ATTY. DOCKET NO./TITLE
09/052,862	03/31/1998	FRANK E. JOHNSON	PAT-057

CONFIRMATION NO. 9604

POWER OF ATTORNEY NOTICE

OC000000066895261

29129
TOM TILDEN
C/O WEST CORPORATION
11808 MIRACLE HILLS DR.
MAIL STOP: W11-LEGAL
OMAHA, NE 68154

Date Mailed: 03/10/2014

NOTICE REGARDING CHANGE OF POWER OF ATTORNEY

This is in response to the Power of Attorney filed 02/27/2014.

- The Power of Attorney to you in this application has been revoked by the assignee who has intervened as provided by 37 CFR 3.71. Future correspondence will be mailed to the new address of record(37 CFR 1.33).

/kgebremichael/

Office of Data Management, Application Assistance Unit (571) 272-4000, or (571) 272-4200, or 1-888-786-0101

Transaction History Date 2017-03-09
Date information retrieved from USPTO Patent Application Information Retrieval (PAIR) system records at www.uspto.gov

PTO/SB/81A (12-08)
Approved for use through 11/30/2011. OMB 0651-0035
U.S. Patent and Trademark Office; U.S. DEPARTMENT OF COMMERCE
Under the Paperwork Reduction Act of 1995, no persons are required to respond to a collection of information unless it displays a valid OMB control number.

PATENT - POWER OF ATTORNEY OR REVOCATION OF POWER OF ATTORNEY WITH A NEW POWER OF ATTORNEY AND CHANGE OF CORRESPONDENCE ADDRESS		
	Patent Number	6,161,137
	Issue Date	12/12/2000
	First Named Inventor	OGDON, Robert H.
	Title	METHOD AND SYSTEM FOR PROVIDING A PRESENTATION ON A NETWORK
	Attorney Docket Number	PAT-057

I hereby revoke all previous powers of attorney given in the above-identified patent.

☐ A Power of Attorney is submitted herewith.

OR

☒ I hereby appoint Practitioner(s) associated with the following Customer Number as my/our attorney(s) or agent(s) with respect to the patent identified above, and to transact all business in the United States Patent and Trademark Office connected therewith: 29129

OR

☐ I hereby appoint Practitioner(s) named below as my/our attorney(s) or agent(s) with respect to the patent identified above, and to transact all business in the United States Patent and Trademark Office connected therewith:

Practitioner(s) Name	Registration Number

Please recognize or change the correspondence address for the above-identified patent to:

☒ The address associated with the above-mentioned Customer Number.

OR

☐ The address associated with Customer Number:

OR

☐ Firm or Individual Name					
Address					
City		State		Zip	
Country					
Telephone		Email			

I am the:

☐ Inventor, having ownership of the patent.

OR

☒ Patent owner.
Statement under 37 CFR 3.73(b) (Form PTO/SB/96) submitted herewith or filed on _____.

SIGNATURE of Inventor or Patent Owner

Signature	/David C. Mussman/	Date	May 31, 2012
Name	David C. Mussman	Telephone	402-965-7077
Title and Company	Secretary, West Corporation		

NOTE: Signatures of all the inventors or patent owners of the entire interest or their representative(s) are required. Submit multiple forms if more than one signature is required, see below*.

☐ *Total of _____ forms are submitted.

This collection of information is required by 37 CFR 1.31, 1.32 and 1.33. The information is required to obtain or retain a benefit by the public which is to file (and by the USPTO to process) an application. Confidentiality is governed by 35 U.S.C. 122 and 37 CFR 1.11 and 1.14. This collection is estimated to take 3 minutes to complete, including gathering, preparing, and submitting the completed application form to the USPTO. Time will vary depending upon the individual case. Any comments on the amount of time you require to complete this form and/or suggestions for reducing this burden, should be sent to the Chief Information Officer, U.S. Patent and Trademark Office, U.S. Department of Commerce, P.O. Box 1450, Alexandria, VA 22313-1450. DO NOT SEND FEES OR COMPLETED FORMS TO THIS ADDRESS. SEND TO: **Commissioner for Patents, P.O. Box 1450, Alexandria, VA 22313-1450.**

If you need assistance in completing the form, call 1-800-PTO-9199 and select option 2.

File History Content Report

The following content is missing from the original file history record obtained from the United States Patent and Trademark Office. No additional information is available.

Document Date - 2017-03-28

Document Title - USPTO Communication Re: Change of Address

This page is not part of the official USPTO record. It has been determined that content identified on this document is missing from the original file history record.

UNITED STATES PATENT AND TRADEMARK OFFICE

UNITED STATES DEPARTMENT OF COMMERCE
United States Patent and Trademark Office
Address: COMMISSIONER FOR PATENTS
P.O. Box 1450
Alexandria, Virginia 22313-1450
www.uspto.gov

APPLICATION NUMBER	FILING OR 371(C) DATE	FIRST NAMED APPLICANT	ATTY. DOCKET NO./TITLE
09/052,862	03/31/1998	FRANK E. JOHNSON	

CONFIRMATION NO. 9604

POA ACCEPTANCE LETTER

OC000000090245349

29129
TOM TILDEN
C/O WEST CORPORATION
11808 MIRACLE HILLS DR.
MAIL STOP: W11-LEGAL
OMAHA, NE 68154

Date Mailed: 03/29/2017

NOTICE OF ACCEPTANCE OF POWER OF ATTORNEY

This is in response to the Power of Attorney filed 03/09/2017.

The Power of Attorney in this application is accepted. Correspondence in this application will be mailed to the above address as provided by 37 CFR 1.33.

Questions about the contents of this notice and the requirements it sets forth should be directed to the Office of Data Management, Application Assistance Unit, at **(571) 272-4000** or **(571) 272-4200** or **1-888-786-0101**.

/deelliott/

UNITED STATES PATENT AND TRADEMARK OFFICE

UNITED STATES DEPARTMENT OF COMMERCE
United States Patent and Trademark Office
Address: COMMISSIONER FOR PATENTS
P.O. Box 1450
Alexandria, Virginia 22313-1450
www.uspto.gov

APPLICATION NUMBER	FILING OR 371(C) DATE	FIRST NAMED APPLICANT	ATTY. DOCKET NO./TITLE
09/052,862	03/31/1998	FRANK E. JOHNSON	PAT-057

CONFIRMATION NO. 9604

POWER OF ATTORNEY NOTICE

OC000000090245251

84646
Haynes and Boone, LLP (48731)
IP Docketing
2323 Victory Avenue
Suite 700
Dallas, TX 75219

Date Mailed: 03/29/2017

NOTICE REGARDING CHANGE OF POWER OF ATTORNEY

This is in response to the Power of Attorney filed 03/09/2017.

- The Power of Attorney to you in this application has been revoked by the assignee who has intervened as provided by 37 CFR 3.71. Future correspondence will be mailed to the new address of record(37 CFR 1.33).

Questions about the contents of this notice and the requirements it sets forth should be directed to the Office of Data Management, Application Assistance Unit, at **(571) 272-4000** or **(571) 272-4200** or **1-888-786-0101**.

/deelliott/

PATENT APPLICATION FEE DETERMINATION RECORD

Effective October 1, 1997

Application or Docket Number: 9/052,862

CLAIMS AS FILED - PART I

FOR	(Column 1) NUMBER FILED	(Column 2) NUMBER EXTRA	SMALL ENTITY RATE	SMALL ENTITY FEE	OR	OTHER THAN SMALL ENTITY RATE	OTHER THAN SMALL ENTITY FEE
BASIC FEE				395.00	OR		790.00
TOTAL CLAIMS	45 minus 20 =	* 25	x$11=	275	OR	x$22=	
INDEPENDENT CLAIMS	7 minus 3 =	* 4	x41=	164	OR	x82=	
MULTIPLE DEPENDENT CLAIM PRESENT			+135=	—	OR	+270=	
			TOTAL	834	OR	TOTAL	

* If the difference in column 1 is less than zero, enter "0" in column 2

CLAIMS AS AMENDED - PART II

AMENDMENT A

	(Column 1) CLAIMS REMAINING AFTER AMENDMENT		(Column 2) HIGHEST NUMBER PREVIOUSLY PAID FOR	(Column 3) PRESENT EXTRA
Total	* 53	Minus	** 45	= 8
Independent	* 12	Minus	*** 7	= 5
FIRST PRESENTATION OF MULTIPLE DEPENDENT CLAIM				

SMALL ENTITY RATE	SMALL ENTITY ADDITIONAL FEE	OR	OTHER THAN SMALL ENTITY RATE	OTHER THAN SMALL ENTITY ADDITIONAL FEE
x$~~11~~ 22=	176.00	OR	x$22=	
x~~41~~ 82=	195.00	OR	x82=	
+135=		OR	+270=	
TOTAL ADDIT. FEE	267.00	OR	TOTAL ADDIT. FEE	

HUK

AMENDMENT B

	(Column 1) CLAIMS REMAINING AFTER AMENDMENT		(Column 2) HIGHEST NUMBER PREVIOUSLY PAID FOR	(Column 3) PRESENT EXTRA
Total	* 40	Minus	** 53	= —
Independent	* 12	Minus	*** 12	= —
FIRST PRESENTATION OF MULTIPLE DEPENDENT CLAIM				

RATE	ADDITIONAL FEE	OR	RATE	ADDITIONAL FEE
x$11=		OR	x$22=	
x41=		OR	x82=	
+135=		OR	+270=	
TOTAL ADDIT. FEE		OR	TOTAL ADDIT. FEE	

AMENDMENT C

	(Column 1) CLAIMS REMAINING AFTER AMENDMENT		(Column 2) HIGHEST NUMBER PREVIOUSLY PAID FOR	(Column 3) PRESENT EXTRA
C				
Total	* 40	Minus	** 53	= —
Independent	* 12	Minus	*** 12	= —
FIRST PRESENTATION OF MULTIPLE DEPENDENT CLAIM				

RATE	ADDITIONAL FEE	OR	RATE	ADDITIONAL FEE
x$11=		OR	x$22=	
x41=		OR	x82=	
+135=		OR	+270=	
TOTAL ADDIT. FEE		OR	TOTAL ADDIT. FEE	

* If the entry in column 1 is less than the entry in column 2, write "0" in column 3.
** If the "Highest Number Previously Paid For" IN THIS SPACE is less than 20, enter "20."
*** If the "Highest Number Previously Paid For" IN THIS SPACE is less than 3, enter "3."
The "Highest Number Previously Paid For" (Total or Independent) is the highest number found in the appropriate box in column 1.

fuboTV Media Inc.
Exhibit 1015
Page 366

Derwent Innovation

Derwent Innovation Patent Export, 2023-10-06 02:18:54 +0000

Search results for: PNS=(US6161137);
Collections searched: DWPI; ARIPO grant; Argentina UM; Argentina app; Armenia grant; Australia UM; Australia app; Australia grant; Austria UM; Austria app; Austria grant; Belarus UM; Belarus grant; Belgium app; Belgium grant; Brazil UM; Brazil app; Brazil grant; Bulgaria UM; Bulgaria app; Bulgaria grant; Canada app; Canada grant; China, Mainland UM; China, Mainland app; China, Mainland grant; Colombia app; Costa Rica UM; Costa Rica app; Croatia UM; Croatia app; Croatia grant; Cuba app; Cuba grant; Czech Republic UM; Czech Republic app; Czech Republic grant; Czechoslovakia grant; Denmark UM; Denmark app; Denmark grant; Estonia UM; Estonia app; Estonia grant; Eurasian (EAPO) grant; Europe (EP) app; Europe (EP) grant; Finland app; Finland grant; France app; France grant; Georgia grant; German Democratic Republic app; German Democratic Republic grant; Germany UM; Germany app; Germany grant; Greece app; Greece grant; Gulf Cooperation Council grant; Hong Kong UM; Hong Kong app; Hong Kong grant; Hungary grant; Iceland grant; India app; India grant; Indonesia UM; Indonesia app; Ireland UM; Ireland app; Ireland grant; Israel grant; Italy grant; Italy grant; Italy grant; Italy grant; Japan UM; Japan app; Japan grant; Korea UM; Korea app; Korea grant; Latvia grant; Lithuania grant; Luxembourgh app; Luxembourgh grant; Malaysia app; Malaysia grant; Mexico app; Mexico grant; Moldova UM; Moldova grant; Monaco grant; Mongolia UM; Mongolia grant; Morocco app; Morocco grant; Netherlands app; Netherlands grant; New Zealand grant; Norway app; Norway grant; OAPI grant; PCT (WO) app; Philippines UM; Philippines app; Philippines grant; Poland UM; Poland grant; Portugal UM; Portugal app; Portugal grant; Romania UM; Romania app; Romania granted; Russia UM; Russia app; Russia grant; Serbia UM; Serbia app; Serbia grant; Singapore app; Singapore grant; Slovakia UM; Slovakia app; Slovakia grant; Slovenia UM; Slovenia grant; South Africa app; Spain UM; Spain app; Spain grant; Sweden app; Sweden grant; Switzerland app; Switzerland grant; Taiwan UM; Taiwan appl; Taiwan grant; Thailand UM; Thailand app; Thailand grant; Tunisia app; Turkey UM; Turkey app; Turkey grant; UK app; UK grant; USSR grant; Ukraine UM; Ukraine grant; United States app; United States grant; Uruguay app; Vietnam UM; Vietnam app; Vietnam grant; Other

Table of Contents

1. US6161137A Method and system for providing a presentation on a network

Family 1/1

1 record(s) per family

Record 1/1 US6161137A Method and system for providing a presentation on a network

Title: Method and system for providing a presentation on a network

Title - DWPI: Network presentation distribution system for presenting presentation distributes presentation content data to several network server nodes, and during performance of presentation, client nodes receiving presentation determine particular variation of data presentation to retrieve from network server nodes

Priority Number: US199741770P

Priority Date: 1997-03-31

Application Number: US199852862A

Application Date: 1998-03-31

Publication Date: 2000-12-12

IPC Class Table:

IPC	Section	Class	Subclass	Class Group	Subgroup
H04L001218	H	H04	H04L	H04L0012	H04L001218
H04L001228	H	H04	H04L	H04L0012	H04L001228
H04L002906	H	H04	H04L	H04L0029	H04L002906
H04L002908	H	H04	H04L	H04L0029	H04L002908
H04N000715	H	H04	H04N	H04N0007	H04N000715
H04N00212343	H	H04	H04N	H04N0021	H04N00212343
H04N002124	H	H04	H04N	H04N0021	H04N002124
H04N00212662	H	H04	H04N	H04N0021	H04N00212662
H04N00214402	H	H04	H04N	H04N0021	H04N00214402

IPC Class Table - DWPI:

IPC - DWPI	Section - DWPI	Class - DWPI	Subclass - DWPI	Class Group - DWPI	Subgroup - DWPI
H04N000710 (IPC 1-7)	H	H04	H04N	H04N0007	H04N000710 (IPC 1-7)

fuboTV Media Inc.
Exhibit 1015
Page 368

G06F001516	G	G06	G06F	G06F0015	G06F001516
G06F00030481	G	G06	G06F	G06F0003	G06F00030481
H04L001218	H	H04	H04L	H04L0012	H04L001218
H04L001226	H	H04	H04L	H04L0012	H04L001226
H04L001228	H	H04	H04L	H04L0012	H04L001228
H04L002906	H	H04	H04L	H04L0029	H04L002906
H04L002908	H	H04	H04L	H04L0029	H04L002908
H04N00212343	H	H04	H04N	H04N0021	H04N00212343
H04N002124	H	H04	H04N	H04N0021	H04N002124
H04N0021242	H	H04	H04N	H04N0021	H04N0021242
H04N00212662	H	H04	H04N	H04N0021	H04N00212662
H04N00214402	H	H04	H04N	H04N0021	H04N00214402
H04N002161	H	H04	H04N	H04N0021	H04N002161
H04N000715	H	H04	H04N	H04N0007	H04N000715
H04N000724	H	H04	H04N	H04N0007	H04N000724
G06F001700	G	G06	G06F	G06F0017	G06F001700
H04N0007173	H	H04	H04N	H04N0007	H04N0007173

Assignee/Applicant: MSHOW.com Inc.,Highlands Ranch,CO,US

JP F Terms:

JP FI Codes:

Assignee - Original: MSHOW.com Inc.

Any CPC Table:

Type	CPC - Current - Invention	CPC - Current - Additional	Version	Office
Current	**H04L 63/0428**	H04L 12/1836	20130101	EP; US
Current	H04L 12/1813	H04L 63/02	20130101	EP; US
Current	H04L 12/1822	H04L 63/04	20130101	EP; US
Current	H04L 12/1827	H04L 69/329	20130101	EP; US
Current	H04L 12/5692		20130101	EP; US
Current	H04L 63/083		20130101	EP; US
Current	H04L 65/80		20130101	EP; US
Current	H04L 67/02		20130101	EP; US
Current	H04N 7/15		20130101	EP; US
Current	H04N 21/234327		20130101	EP; US

Current Current Current	H04N 21/2402 H04N 21/2662 H04N 21/440227		20130101 20130101 20130101	EP; US EP; US EP; US
Current Current	H04L 9/40 H04L 65/1101	-	20220501 20220501	US US
Current Current Current Current Current	H04L 65/612 H04L 67/56 H04L 67/564 H04L 67/565 H04L 67/5651	H04L 67/568	20220501 20220501 20220501 20220501 20220501	EP; US EP; US EP; US EP; US EP; US
Original Original Original Original Original Original Original Original Original Original Original Original Original	**H04L 63/0428** H04L 12/1813 H04L 12/1822 H04L 12/1827 H04L 12/5692 H04L 63/083 H04L 65/80 H04L 67/02 H04N 7/15 H04N 21/234327 H04N 21/2402 H04N 21/2662 H04N 21/440227	H04L 12/1836 H04L 63/02 H04L 63/04 H04L 69/329	20130101 20130101 20130101 20130101 20130101 20130101 20130101 20130101 20130101 20130101 20130101 20130101 20130101	US US US US US US US US US US US US US
Original Original Original Original Original Original Original	H04L 9/40 H04L 65/1101 H04L 65/612 H04L 67/56 H04L 67/564 H04L 67/565 H04L 67/5651	H04L 67/568	20220501 20220501 20220501 20220501 20220501 20220501 20220501	US US US US US US US

ECLA: H04L006304B | H04L001218D | H04L001218D2 | H04L001218D3 | H04L001256F1 | H04L002906 | H04L002906C2 | H04L002906M4S4 | H04L002906M8 | H04L002908N1 | H04L002908N27 | H04L002908N27E | H04L002908N27F | H04L002908N27L | H04L006308D | H04N000715 | H04N00212343L | H04N002124D | H04N00212662 | H04N00214402L | T04L001218E | T04L002908A7 | T04L002908N27S | T04L006302 | T04L006304

Abstract:

A presentation system is disclosed for distributing a performance of a presentation synchronously to a plurality of client nodes on a network such as the Internet. The presentation system distributes presentation content data to a plurality of network server nodes, and during a performance of the presentation, the client nodes receiving the presentation determine a particular variation of data presentation to retrieve from the network server nodes. In particular, the retrieval of presentation data depends upon the transmission characteristics of the network such as data transmission rate.

Thus, if a low transmission data rate is detected at a first client node, presentation elements of a reduced size can be retrieved. Alternatively, if a higher transmission rate is detected at a second client node, presentation elements of greater size (and corresponding enhanced quality of presentation) can be retrieved. Thus, within a single performance, client network nodes with varying available network bandwidths can be utilized for synchronously and simultaneously performing the presentation.

Language of Publication: EN

INPADOC Legal Status Table:

Gazette Date	Code	INPADOC Legal Status Impact
2022-12-20	AS	-
Description: ASSIGNMENT ASSET DIRECT MORTGAGE, LLC, NEBRASKA RELEASE BY SECURED PARTY; ASSIGNOR:WELLS FARGO BANK, NATIONAL ASSOCIATION, AS SUCCESSOR TO WACHOVIA BANK, NATIONAL ASSOCIATION; REEL/FRAME:062249/0385 2022-11-03		
2022-12-20	AS	-
Description: ASSIGNMENT BUYDEBTCO, LLC, NEBRASKA RELEASE BY SECURED PARTY; ASSIGNOR:WELLS FARGO BANK, NATIONAL ASSOCIATION, AS SUCCESSOR TO WACHOVIA BANK, NATIONAL ASSOCIATION; REEL/FRAME:062249/0385 2022-11-03		
2022-12-20	AS	-
Description: ASSIGNMENT COSMOSIS CORPORATION, NEBRASKA RELEASE BY SECURED PARTY; ASSIGNOR:WELLS FARGO BANK, NATIONAL ASSOCIATION, AS SUCCESSOR TO WACHOVIA BANK, NATIONAL ASSOCIATION; REEL/FRAME:062249/0385 2022-11-03		
2022-12-20	AS	-
Description: ASSIGNMENT GEO911, INC., CALIFORNIA RELEASE BY SECURED PARTY; ASSIGNOR:WELLS FARGO BANK, NATIONAL ASSOCIATION, AS SUCCESSOR TO WACHOVIA BANK, NATIONAL ASSOCIATION; REEL/FRAME:062249/0385 2022-11-03		
2022-12-20	AS	-
Description: ASSIGNMENT INTERCALL TELECOM VENTURES, LLC, NEBRASKA RELEASE BY SECURED PARTY; ASSIGNOR:WELLS FARGO BANK, NATIONAL ASSOCIATION, AS SUCCESSOR TO WACHOVIA BANK, NATIONAL ASSOCIATION; REEL/FRAME:062249/0385 2022-11-03		
2022-12-20	AS	-
Description: ASSIGNMENT INTERCALL, INC., NEBRASKA RELEASE BY SECURED PARTY; ASSIGNOR:WELLS FARGO BANK, NATIONAL ASSOCIATION, AS SUCCESSOR TO WACHOVIA BANK, NATIONAL ASSOCIATION; REEL/FRAME:062249/0385 2022-11-03		

2022-12-20	AS	-
Description: ASSIGNMENT INTRADO COMMAND SYSTEMS, INC., NEBRASKA RELEASE BY SECURED PARTY; ASSIGNOR:WELLS FARGO BANK, NATIONAL ASSOCIATION, AS SUCCESSOR TO WACHOVIA BANK, NATIONAL ASSOCIATION; REEL/FRAME:062249/0385 2022-11-03		
2022-12-20	AS	-
Description: ASSIGNMENT INTRADO COMMUNICATIONS INC., NEBRASKA RELEASE BY SECURED PARTY; ASSIGNOR:WELLS FARGO BANK, NATIONAL ASSOCIATION, AS SUCCESSOR TO WACHOVIA BANK, NATIONAL ASSOCIATION; REEL/FRAME:062249/0385 2022-11-03		
2022-12-20	AS	-
Description: ASSIGNMENT INTRADO COMMUNICATIONS OF VIRGINIA INC., NEBRASKA RELEASE BY SECURED PARTY; ASSIGNOR:WELLS FARGO BANK, NATIONAL ASSOCIATION, AS SUCCESSOR TO WACHOVIA BANK, NATIONAL ASSOCIATION; REEL/FRAME:062249/0385 2022-11-03		
2022-12-20	AS	-
Description: ASSIGNMENT INTRADO INC., NEBRASKA RELEASE BY SECURED PARTY; ASSIGNOR:WELLS FARGO BANK, NATIONAL ASSOCIATION, AS SUCCESSOR TO WACHOVIA BANK, NATIONAL ASSOCIATION; REEL/FRAME:062249/0385 2022-11-03		
2022-12-20	AS	-
Description: ASSIGNMENT INTRADO INFORMATION SYSTEM HOLDINGS, INC., NEBRASKA RELEASE BY SECURED PARTY; ASSIGNOR:WELLS FARGO BANK, NATIONAL ASSOCIATION, AS SUCCESSOR TO WACHOVIA BANK, NATIONAL ASSOCIATION; REEL/FRAME:062249/0385 2022-11-03		
2022-12-20	AS	-
Description: ASSIGNMENT INTRADO INTERNATIONAL, LLC, NEBRASKA RELEASE BY SECURED PARTY; ASSIGNOR:WELLS FARGO BANK, NATIONAL ASSOCIATION, AS SUCCESSOR TO WACHOVIA BANK, NATIONAL ASSOCIATION; REEL/FRAME:062249/0385 2022-11-03		
2022-12-20	AS	-
Description: ASSIGNMENT MASYS CORPORATION, CALIFORNIA RELEASE BY SECURED PARTY; ASSIGNOR:WELLS FARGO BANK, NATIONAL ASSOCIATION, AS SUCCESSOR TO WACHOVIA BANK, NATIONAL ASSOCIATION; REEL/FRAME:062249/0385 2022-11-03		
2022-12-20	AS	-
Description: ASSIGNMENT NORTHERN CONTACT, INC., CALIFORNIA RELEASE BY SECURED PARTY; ASSIGNOR:WELLS FARGO BANK, NATIONAL ASSOCIATION, AS SUCCESSOR TO WACHOVIA BANK, NATIONAL ASSOCIATION; REEL/FRAME:062249/0385 2022-11-03		
2022-12-20	AS	-
Description: ASSIGNMENT POSITRON PUBLIC SAFETY SYSTEMS CORP., NEBRASKA RELEASE BY SECURED		

PARTY; ASSIGNOR:WELLS FARGO BANK, NATIONAL ASSOCIATION, AS SUCCESSOR TO WACHOVIA BANK, NATIONAL ASSOCIATION; REEL/FRAME:062249/0385 2022-11-03

2022-12-20	AS	-

Description: ASSIGNMENT STARGATE MANAGEMENT LLC, NEBRASKA RELEASE BY SECURED PARTY; ASSIGNOR:WELLS FARGO BANK, NATIONAL ASSOCIATION, AS SUCCESSOR TO WACHOVIA BANK, NATIONAL ASSOCIATION; REEL/FRAME:062249/0385 2022-11-03

2022-12-20	AS	-

Description: ASSIGNMENT TELEVOX SOFTWARE, INCORPORATED, NEBRASKA RELEASE BY SECURED PARTY; ASSIGNOR:WELLS FARGO BANK, NATIONAL ASSOCIATION, AS SUCCESSOR TO WACHOVIA BANK, NATIONAL ASSOCIATION; REEL/FRAME:062249/0385 2022-11-03

2022-12-20	AS	-

Description: ASSIGNMENT THE DEBT DEPOT, LLC, NEBRASKA RELEASE BY SECURED PARTY; ASSIGNOR:WELLS FARGO BANK, NATIONAL ASSOCIATION, AS SUCCESSOR TO WACHOVIA BANK, NATIONAL ASSOCIATION; REEL/FRAME:062249/0385 2022-11-03

2022-12-20	AS	-

Description: ASSIGNMENT WEST ASSET MANAGEMENT, INC., CALIFORNIA RELEASE BY SECURED PARTY; ASSIGNOR:WELLS FARGO BANK, NATIONAL ASSOCIATION, AS SUCCESSOR TO WACHOVIA BANK, NATIONAL ASSOCIATION; REEL/FRAME:062249/0385 2022-11-03

2022-12-20	AS	-

Description: ASSIGNMENT WEST ASSET PURCHASING, LLC, NEBRASKA RELEASE BY SECURED PARTY; ASSIGNOR:WELLS FARGO BANK, NATIONAL ASSOCIATION, AS SUCCESSOR TO WACHOVIA BANK, NATIONAL ASSOCIATION; REEL/FRAME:062249/0385 2022-11-03

2022-12-20	AS	-

Description: ASSIGNMENT WEST AT HOME, LLC, CALIFORNIA RELEASE BY SECURED PARTY; ASSIGNOR:WELLS FARGO BANK, NATIONAL ASSOCIATION, AS SUCCESSOR TO WACHOVIA BANK, NATIONAL ASSOCIATION; REEL/FRAME:062249/0385 2022-11-03

2022-12-20	AS	-

Description: ASSIGNMENT WEST BUSINESS SERVICES, LLC, CALIFORNIA RELEASE BY SECURED PARTY; ASSIGNOR:WELLS FARGO BANK, NATIONAL ASSOCIATION, AS SUCCESSOR TO WACHOVIA BANK, NATIONAL ASSOCIATION; REEL/FRAME:062249/0385 2022-11-03

2022-12-20	AS	-

Description: ASSIGNMENT WEST CORPORATION, NEBRASKA RELEASE BY SECURED PARTY; ASSIGNOR:WELLS FARGO BANK, NATIONAL ASSOCIATION, AS SUCCESSOR TO WACHOVIA BANK, NATIONAL ASSOCIATION; REEL/FRAME:062249/0385 2022-11-03

2022-12-20	AS	-
Description: ASSIGNMENT WEST CUSTOMER MANAGEMENT GROUP, LLC, CALIFORNIA RELEASE BY SECURED PARTY; ASSIGNOR:WELLS FARGO BANK, NATIONAL ASSOCIATION, AS SUCCESSOR TO WACHOVIA BANK, NATIONAL ASSOCIATION; REEL/FRAME:062249/0385 2022-11-03		
2022-12-20	AS	-
Description: ASSIGNMENT WEST DIRECT II, INC., CALIFORNIA RELEASE BY SECURED PARTY; ASSIGNOR:WELLS FARGO BANK, NATIONAL ASSOCIATION, AS SUCCESSOR TO WACHOVIA BANK, NATIONAL ASSOCIATION; REEL/FRAME:062249/0385 2022-11-03		
2022-12-20	AS	-
Description: ASSIGNMENT WEST DIRECT, LLC, CALIFORNIA RELEASE BY SECURED PARTY; ASSIGNOR:WELLS FARGO BANK, NATIONAL ASSOCIATION, AS SUCCESSOR TO WACHOVIA BANK, NATIONAL ASSOCIATION; REEL/FRAME:062249/0385 2022-11-03		
2022-12-20	AS	-
Description: ASSIGNMENT WEST FACILITIES, LLC, NEBRASKA RELEASE BY SECURED PARTY; ASSIGNOR:WELLS FARGO BANK, NATIONAL ASSOCIATION, AS SUCCESSOR TO WACHOVIA BANK, NATIONAL ASSOCIATION; REEL/FRAME:062249/0385 2022-11-03		
2022-12-20	AS	-
Description: ASSIGNMENT WEST INTERACTIVE CORPORATION, NEBRASKA RELEASE BY SECURED PARTY; ASSIGNOR:WELLS FARGO BANK, NATIONAL ASSOCIATION, AS SUCCESSOR TO WACHOVIA BANK, NATIONAL ASSOCIATION; REEL/FRAME:062249/0385 2022-11-03		
2022-12-20	AS	-
Description: ASSIGNMENT WEST INTERNATIONAL CORPORATION, NEBRASKA RELEASE BY SECURED PARTY; ASSIGNOR:WELLS FARGO BANK, NATIONAL ASSOCIATION, AS SUCCESSOR TO WACHOVIA BANK, NATIONAL ASSOCIATION; REEL/FRAME:062249/0385 2022-11-03		
2022-12-20	AS	-
Description: ASSIGNMENT WEST NOTIFICATIONS GROUP, INC., NEBRASKA RELEASE BY SECURED PARTY; ASSIGNOR:WELLS FARGO BANK, NATIONAL ASSOCIATION, AS SUCCESSOR TO WACHOVIA BANK, NATIONAL ASSOCIATION; REEL/FRAME:062249/0385 2022-11-03		
2022-12-20	AS	-
Description: ASSIGNMENT WEST RECEIVABLE SERVICES, INC., NEBRASKA RELEASE BY SECURED PARTY; ASSIGNOR:WELLS FARGO BANK, NATIONAL ASSOCIATION, AS SUCCESSOR TO WACHOVIA BANK, NATIONAL ASSOCIATION; REEL/FRAME:062249/0385 2022-11-03		
2017-08-08	AS	-
Description: ASSIGNMENT RED HAT, INC., NORTH CAROLINA ASSIGNMENT OF ASSIGNORS INTEREST;		

ASSIGNOR:OPEN INVENTION NETWORK, LLC; REEL/FRAME:043276/0799 2017-07-20		
2017-06-06	AS	-
Description: ASSIGNMENT INTERCALL, INC., NEBRASKA RELEASE BY SECURED PARTY; ASSIGNOR:WELLS FARGO BANK, NATIONAL ASSOCIATION; REEL/FRAME:042701/0719 2013-12-02		
2017-06-06	AS	-
Description: ASSIGNMENT WEST CORPORATION, NEBRASKA RELEASE BY SECURED PARTY; ASSIGNOR:WELLS FARGO BANK, NATIONAL ASSOCIATION; REEL/FRAME:042701/0719 2013-12-02		
2013-12-12	AS	-
Description: ASSIGNMENT OPEN INVENTION NETWORK, LLC, NORTH CAROLINA ASSIGNMENT OF ASSIGNORS INTEREST; ASSIGNOR:WEST CORPORATION; REEL/FRAME:031775/0861 2013-12-03		
2012-06-12	FPAY	+
Description: FEE PAYMENT FEE PAYMENT YEAR 12		
2012-05-08	SULP	+
Description: SURCHARGE FOR LATE PAYMENT		
2009-08-12	AS	-
Description: ASSIGNMENT WACHOVIA BANK, NATIONAL ASSOCIATION, AS ADMINISTRA ASSIGNMENT AND ASSUMPTION OF SECURITY; ASSIGNORS:WEST CORPORATION; COSMOSIS CORPORATION; INTERCALL, INC.; AND OTHERS; REEL/FRAME:023085/0574 2009-08-10		
2008-01-21	FPAY	+
Description: FEE PAYMENT FEE PAYMENT YEAR 8		
2006-10-25	AS	-
Description: ASSIGNMENT LEHMAN COMMERCIAL PAPER, INC., NEW YORK SECURITY AGREEMENT; ASSIGNORS:INTERCALL, INC; INTRADO INC; WEST CORPORATION; AND OTHERS; REEL/FRAME:018433/0233 2006-10-24		
2006-10-25	AS	-
Description: ASSIGNMENT LEHMAN COMMERCIAL PAPER, INC.,NEW YORK SECURITY AGREEMENT; ASSIGNORS:INTERCALL, INC; INTRADO INC; WEST CORPORATION; AND OTHERS; REEL/FRAME:018433/0233 2006-10-24		
2005-04-13	AS	-

Description: ASSIGNMENT WEST CORPORATION, NEBRASKA ASSIGNMENT OF ASSIGNORS INTEREST; ASSIGNOR:INTERCALL, INC.; REEL/FRAME:015896/0249 2005-04-07		
2004-09-21	AS	-
Description: ASSIGNMENT INTERCALL, INC., ILLINOIS ASSIGNMENT OF ASSIGNORS INTEREST; ASSIGNOR:INTERCALL WEB CONFERENCING, INC.; REEL/FRAME:015147/0926 2003-02-19		
2004-05-12	FPAY	+
Description: FEE PAYMENT FEE PAYMENT YEAR 4		
2003-05-06	AS	-
Description: ASSIGNMENT MSHOW.COM, INC., COLORADO BANKRUPTCY ORDER RELEASING ALL LIENS; ASSIGNOR:HOWARD H. LEACH LIVING TRUST; REEL/FRAME:014033/0395 2002-04-29		
2003-02-25	AS	-
Description: ASSIGNMENT INTERCALL WEB CONFERENCING, INC., ILLINOIS ASSIGNMENT OF ASSIGNORS INTEREST; ASSIGNORS:MSHOW.COM; INTERCALL WEB CONFERENCING, INC.; REEL/FRAME:013791/0889 2003-02-19		
2003-02-25	AS	-
Description: ASSIGNMENT INTERCALL, INC., ILLINOIS ASSIGNMENT OF ASSIGNORS INTEREST; ASSIGNORS:MSHOW.COM; INTERCALL WEB CONFERENCING, INC.; REEL/FRAME:013791/0889 2003-02-19		
2002-07-19	AS	-
Description: ASSIGNMENT INTERCALL WEB CONFERENCING, INC., ILLINOIS ASSIGNMENT OF ASSIGNORS INTEREST; ASSIGNOR:MSHOW.COM, INC.; REEL/FRAME:013101/0476 2002-05-10		
2001-02-26	AS	-
Description: ASSIGNMENT BLUE CHIP CAPITAL FUND LIMITED PARTNERSHIP, OHIO SECURITY AGREEMENT; ASSIGNOR:MSHOW.COM, INC.; REEL/FRAME:011551/0445 2001-02-26		
2001-02-26	AS	-
Description: ASSIGNMENT HOWARD H. LEACH LIVING TRUST, THE, U/T/D/ 9/5/86 A SECURITY AGREEMENT; ASSIGNOR:MSHOW.COM, INC.; REEL/FRAME:011551/0445 2001-02-26		
2000-12-22	AS	-
Description: ASSIGNMENT HOWARD H. LEACH LIVING TRUST U.D.T. 9/5/86 AS AMEN SECURITY INTEREST; ASSIGNOR:MSHOW.COM; REEL/FRAME:011390/0546 2000-12-20		
2000-11-24	STCF	-

Description: INFORMATION ON STATUS: PATENT GRANT PATENTED CASE		
2000-08-28	AS	-
Description: ASSIGNMENT MSHOW.COM, COLORADO CHANGE OF NAME; ASSIGNOR:BROADBAND ASSOCIATES; REEL/FRAME:011078/0370 1999-05-14		
1998-03-31	AS	-
Description: ASSIGNMENT BROADBAND ASSOCIATES, COLORADO ASSIGNMENT OF ASSIGNORS INTEREST; ASSIGNORS:OGDON, ROBERT H.; JOHNSON, FRANK E.; REEL/FRAME:009107/0366 1998-03-31		

Post-Issuance (US):

Reassignment (US) Table:

Assignee	Assignor	Date Signed	Reel/Frame	Date
WEST CORPORATION,OMAHA,NE,US	WELLS FARGO BANK, NATIONAL ASSOCIATION, AS SUCCESSOR TO WACHOVIA BANK, NATIONAL ASSOCIATION	2022-11-03	062249/0385	2022-12-20
COSMOSIS CORPORATION,OMAHA,NE,US				
INTERCALL INC.,OMAHA,NE,US				
INTRADO COMMUNICATIONS INC.,OMAHA,NE,US				
INTRADO COMMUNICATIONS OF VIRGINIA INC.,OMAHA,NE,US				
INTRADO INC.,OMAHA,NE,US				
INTRADO INFORMATION SYSTEM HOLDINGS INC.,OMAHA,NE,US				
INTRADO COMMAND SYSTEMS INC.,OMAHA,NE,US				
GEO911 INC.,LOS ANGELES,CA,US				
POSITRON PUBLIC SAFETY				

SYSTEMS CORP.,OMAHA,NE,US	
MASYS CORPORATION,LOS ANGELES,CA,US	
TELEVOX SOFTWARE INCORPORATED,OMAHA,NE,US	
WEST ASSET MANAGEMENT INC.,IRVINE,CA,US	
WEST DIRECT II INC.,IRVINE,CA,US	
WEST INTERACTIVE CORPORATION,OMAHA,NE,US	
WEST INTERNATIONAL CORPORATION,OMAHA,NE,US	
NORTHERN CONTACT INC.,IRVINE,CA,US	
WEST NOTIFICATIONS GROUP INC.,OMAHA,NE,US	
WEST RECEIVABLE SERVICES INC.,OMAHA,NE,US	
WEST BUSINESS SERVICES LLC,IRVINE,CA,US	
WEST DIRECT LLC,IRVINE,CA,US	
WEST FACILITIES LLC,OMAHA,NE,US	
WEST AT HOME LLC,IRVINE,CA,US	
WEST CUSTOMER MANAGEMENT GROUP LLC,IRVINE,CA,US	
ASSET DIRECT MORTGAGE LLC,OMAHA,NE,US	
INTERCALL TELECOM	

VENTURES LLC,OMAHA,NE,US	
BUYDEBTCO LLC,OMAHA,NE,US	
THE DEBT DEPOT LLC,OMAHA,NE,US	
WEST ASSET PURCHASING LLC,OMAHA,NE,US	
INTRADO INTERNATIONAL LLC,OMAHA,NE,US	
STARGATE MANAGEMENT LLC,OMAHA,NE,US	

Conveyance: RELEASE BY SECURED PARTY (SEE DOCUMENT FOR DETAILS). | RELEASE BY SECURED PARTY (SEE DOCUMENT FOR DETAILS). | RELEASE BY SECURED PARTY (SEE DOCUMENT FOR DETAILS). | RELEASE BY SECURED PARTY (SEE DOCUMENT FOR DETAILS). | RELEASE BY SECURED PARTY (SEE DOCUMENT FOR DETAILS). | RELEASE BY SECURED PARTY (SEE DOCUMENT FOR DETAILS). | RELEASE BY SECURED PARTY (SEE DOCUMENT FOR DETAILS). | RELEASE BY SECURED PARTY (SEE DOCUMENT FOR DETAILS). | RELEASE BY SECURED PARTY (SEE DOCUMENT FOR DETAILS). | RELEASE BY SECURED PARTY (SEE DOCUMENT FOR DETAILS). | RELEASE BY SECURED PARTY (SEE DOCUMENT FOR DETAILS). | RELEASE BY SECURED PARTY (SEE DOCUMENT FOR DETAILS). | RELEASE BY SECURED PARTY (SEE DOCUMENT FOR DETAILS). | RELEASE BY SECURED PARTY (SEE DOCUMENT FOR DETAILS). | RELEASE BY SECURED PARTY (SEE DOCUMENT FOR DETAILS). | RELEASE BY SECURED PARTY (SEE DOCUMENT FOR DETAILS). | RELEASE BY SECURED PARTY (SEE DOCUMENT FOR DETAILS). | RELEASE BY SECURED PARTY (SEE DOCUMENT FOR DETAILS). | RELEASE BY SECURED PARTY (SEE DOCUMENT FOR DETAILS). | RELEASE BY SECURED PARTY (SEE DOCUMENT FOR DETAILS). | RELEASE BY SECURED PARTY (SEE DOCUMENT FOR DETAILS). | RELEASE BY SECURED PARTY (SEE DOCUMENT FOR DETAILS). | RELEASE BY SECURED PARTY (SEE DOCUMENT FOR DETAILS). | RELEASE BY SECURED PARTY (SEE DOCUMENT FOR DETAILS). | RELEASE BY SECURED PARTY (SEE DOCUMENT FOR DETAILS). | RELEASE BY SECURED PARTY (SEE DOCUMENT FOR DETAILS). | RELEASE BY SECURED PARTY (SEE DOCUMENT FOR DETAILS). | RELEASE BY SECURED PARTY (SEE DOCUMENT FOR DETAILS).

Corresponent: NATALIE A. AFFINITO 1285 AVENUE OF THE AMERICAS PAUL WEISS RIFKIND WHARTON & GARRISON LLP NEW YORK, NY 10019 | NATALIE A. AFFINITO 1285 AVENUE OF THE AMERICAS PAUL WEISS RIFKIND WHARTON & GARRISON LLP NEW YORK, NY 10019 | NATALIE A. AFFINITO 1285 AVENUE OF THE AMERICAS PAUL WEISS RIFKIND WHARTON & GARRISON LLP NEW YORK, NY 10019 | NATALIE A. AFFINITO 1285 AVENUE OF THE AMERICAS PAUL WEISS RIFKIND WHARTON & GARRISON LLP NEW YORK, NY 10019 | NATALIE A. AFFINITO 1285 AVENUE OF THE AMERICAS PAUL WEISS RIFKIND WHARTON & GARRISON LLP NEW YORK, NY 10019 | NATALIE A. AFFINITO 1285 AVENUE OF THE AMERICAS PAUL WEISS RIFKIND WHARTON & GARRISON LLP NEW YORK, NY 10019 | NATALIE A. AFFINITO 1285 AVENUE OF THE AMERICAS PAUL WEISS RIFKIND WHARTON & GARRISON LLP NEW YORK, NY 10019 | NATALIE A. AFFINITO 1285 AVENUE OF THE AMERICAS PAUL WEISS RIFKIND WHARTON & GARRISON LLP NEW YORK, NY 10019 | NATALIE A. AFFINITO 1285 AVENUE OF THE AMERICAS PAUL WEISS RIFKIND WHARTON & GARRISON LLP NEW YORK, NY 10019 | NATALIE A. AFFINITO 1285 AVENUE OF THE AMERICAS PAUL WEISS RIFKIND WHARTON & GARRISON LLP NEW YORK, NY 10019 | NATALIE A. AFFINITO 1285 AVENUE OF THE AMERICAS PAUL WEISS RIFKIND WHARTON & GARRISON LLP NEW YORK, NY 10019 | NATALIE A. AFFINITO 1285 AVENUE OF THE AMERICAS PAUL WEISS RIFKIND WHARTON & GARRISON LLP NEW YORK, NY 10019 | NATALIE A. AFFINITO 1285

AVENUE OF THE AMERICAS PAUL WEISS RIFKIND WHARTON & GARRISON LLP NEW YORK, NY 10019 | NATALIE A. AFFINITO 1285 AVENUE OF THE AMERICAS PAUL WEISS RIFKIND WHARTON & GARRISON LLP NEW YORK, NY 10019 | NATALIE A. AFFINITO 1285 AVENUE OF THE AMERICAS PAUL WEISS RIFKIND WHARTON & GARRISON LLP NEW YORK, NY 10019 | NATALIE A. AFFINITO 1285 AVENUE OF THE AMERICAS PAUL WEISS RIFKIND WHARTON & GARRISON LLP NEW YORK, NY 10019 | NATALIE A. AFFINITO 1285 AVENUE OF THE AMERICAS PAUL WEISS RIFKIND WHARTON & GARRISON LLP NEW YORK, NY 10019 | NATALIE A. AFFINITO 1285 AVENUE OF THE AMERICAS PAUL WEISS RIFKIND WHARTON & GARRISON LLP NEW YORK, NY 10019 | NATALIE A. AFFINITO 1285 AVENUE OF THE AMERICAS PAUL WEISS RIFKIND WHARTON & GARRISON LLP NEW YORK, NY 10019 | NATALIE A. AFFINITO 1285 AVENUE OF THE AMERICAS PAUL WEISS RIFKIND WHARTON & GARRISON LLP NEW YORK, NY 10019 | NATALIE A. AFFINITO 1285 AVENUE OF THE AMERICAS PAUL WEISS RIFKIND WHARTON & GARRISON LLP NEW YORK, NY 10019 | NATALIE A. AFFINITO 1285 AVENUE OF THE AMERICAS PAUL WEISS RIFKIND WHARTON & GARRISON LLP NEW YORK, NY 10019 | NATALIE A. AFFINITO 1285 AVENUE OF THE AMERICAS PAUL WEISS RIFKIND WHARTON & GARRISON LLP NEW YORK, NY 10019 | NATALIE A. AFFINITO 1285 AVENUE OF THE AMERICAS PAUL WEISS RIFKIND WHARTON & GARRISON LLP NEW YORK, NY 10019 | NATALIE A. AFFINITO 1285 AVENUE OF THE AMERICAS PAUL WEISS RIFKIND WHARTON & GARRISON LLP NEW YORK, NY 10019 | NATALIE A. AFFINITO 1285 AVENUE OF THE AMERICAS PAUL WEISS RIFKIND WHARTON & GARRISON LLP NEW YORK, NY 10019 | NATALIE A. AFFINITO 1285 AVENUE OF THE AMERICAS PAUL WEISS RIFKIND WHARTON & GARRISON LLP NEW YORK, NY 10019 | NATALIE A. AFFINITO 1285 AVENUE OF THE AMERICAS PAUL WEISS RIFKIND WHARTON & GARRISON LLP NEW YORK, NY 10019 | NATALIE A. AFFINITO 1285 AVENUE OF THE AMERICAS PAUL WEISS RIFKIND WHARTON & GARRISON LLP NEW YORK, NY 10019

RED HAT INC.,RALEIGH,NC,US	OPEN INVENTION NETWORK, LLC	2017-07-20	043276/0799	2017-08-08
Conveyance: ASSIGNMENT OF ASSIGNORS INTEREST (SEE DOCUMENT FOR DETAILS).				
Corresponent: HAYNES AND BOONE, LLP 2323 VICTORY AVENUE SUITE 700 DALLAS, TX 75219				
OPEN INVENTION NETWORK LLC,DURHAM,NC,US	WEST CORPORATION	2013-12-03	031775/0861	2013-12-12
Conveyance: ASSIGNMENT OF ASSIGNORS INTEREST (SEE DOCUMENT FOR DETAILS).				
Corresponent: HAYNES AND BOONE, LLP 2323 VICTORY AVENUE SUITE 700 DALLAS, TX 75219				
WEST CORPORATION,OMAHA,NE,US	WELLS FARGO BANK, NATIONAL ASSOCIATION	2013-12-02	042701/0719	2017-06-06
INTERCALL INC.,OMAHA,NE,US	-	-	-	-
Conveyance: RELEASE BY SECURED PARTY (SEE DOCUMENT FOR DETAILS). | RELEASE BY SECURED PARTY (SEE DOCUMENT FOR DETAILS).				
Corresponent: HAYNES AND BOONE, LLP 2323 VICTORY AVENUE SUITE 700 DALLAS, TX 75219 | HAYNES AND BOONE, LLP 2323 VICTORY AVENUE SUITE 700 DALLAS, TX 75219				
WACHOVIA BANK NATIONAL ASSOCIATION AS ADMINISTRATIVE AGENT,CHARLOTTE,NC,US	WEST CORPORATION	2009-08-10	023085/0574	2009-08-12
	COSMOSIS CORPORATION	2009-08-10		
	INTERCALL, INC.	2009-08-10		

INTRADO COMMUNICATIONS INC.	2009-08-10
INTRADO COMMUNICATIONS OF VIRGINIA INC.	2009-08-10
INTRADO INC.	2009-08-10
INTRADO INFORMATION SYSTEM HOLDINGS, INC.	2009-08-10
INTRADO COMMAND SYSTEMS, INC.	2009-08-10
GEO911, INC.	2009-08-10
POSITRON PUBLIC SAFETY SYSTEMS CORP.	2009-08-10
MASYS CORPORATION	2009-08-10
NORTHERN CONTACT, INC.	2009-08-10
TELEVOX SOFTWARE, INCORPORATED	2009-08-10
WEST ASSET MANAGEMENT, INC.	2009-08-10
WEST DIRECT II, INC.	2009-08-10
WEST INTERACTIVE CORPORATION	2009-08-10
WEST INTERNATIONAL CORPORATION	2009-08-10
WEST NOTIFICATIONS GROUP, INC.	2009-08-10
WEST RECEIVABLE SERVICES, INC.	2009-08-10
WEST BUSINESS SERVICES, LLC	2009-08-10
WEST DIRECT, LLC	2009-08-10
WEST FACILITIES, LLC	2009-08-10
WEST AT HOME, LLC	2009-08-10
WEST CUSTOMER MANAGEMENT GROUP, LLC	2009-08-10
ASSET DIRECT	2009-08-10

	MORTGAGE, LLC			
	INTERCALL TELECOM VENTURES, LLC	2009-08-10		
	BUYDEBTCO, LLC	2009-08-10		
	THE DEBT DEPOT, LLC	2009-08-10		
	WEST ASSET PURCHASING, LLC	2009-08-10		
	INTRADO INTERNATIONAL, LLC	2009-08-10		
	STARGATE MANAGEMENT LLC	2009-08-10		
Conveyance: ASSIGNMENT AND ASSUMPTION OF SECURITY				
Corresponent: CORPORATION SERVICE COMPANY 1090 VERMONT AVENUE NW, SUITE 430 ATTN: JEAN PATERSON WASHINGTON, DC 20005				
LEHMAN COMMERCIAL PAPER INC.,NEW YORK,NY,US	INTERCALL, INC	2006-10-24	018433/0233	2006-10-25
	INTRADO INC	2006-10-24		
	WEST CORPORATION	2006-10-24		
	WEST DIRECT, INC	2006-10-24		
Conveyance: SECURITY AGREEMENT				
Corresponent: WEIL, GOTSHAL & MANGES C/O DOUG PLANTE 767 5TH AVENUE NEW YORK, NY 10153				
WEST CORPORATION,OMAHA,NE, US	INTERCALL, INC.	2005-04-07	015896/0249	2005-04-13
Conveyance: ASSIGNMENT OF ASSIGNORS INTEREST (SEE DOCUMENT FOR DETAILS).				
Corresponent: SHERIDAN ROSS P.C. 1560 BROADWAY SUITE 1200 DENVER, CO 80202-5141				
INTERCALL INC.,CHICAGO,IL,US	INTERCALL WEB CONFERENCING, INC.	2003-02-19	015147/0926	2004-09-21
Conveyance: ASSIGNMENT OF ASSIGNORS INTEREST (SEE DOCUMENT FOR DETAILS).				
Corresponent: SHERIDAN ROSS P.C. 1560 BROADWAY SUITE 1200 DENVER, CO 80202-5141				
INTERCALL WEB CONFERENCING INC.,CHICAGO,IL,US	MSHOW.COM	2003-02-19	013791/0889	2003-02-25
INTERCALL	INTERCALL WEB	2003-02-19	-	-

INC.,CHICAGO,IL,US	CONFERENCING, INC.			
Conveyance: ASSIGNMENT OF ASSIGNORS INTEREST (SEE DOCUMENT FOR DETAILS). | ASSIGNMENT OF ASSIGNORS INTEREST (SEE DOCUMENT FOR DETAILS).				
Corresponent: SHERIDAN ROSS P.C. DENNIS J. DUPRAY 1560 BROADWAY, SUITE 1200 DENVER, CO 80202-5141 | SHERIDAN ROSS P.C. DENNIS J. DUPRAY 1560 BROADWAY, SUITE 1200 DENVER, CO 80202-5141				
INTERCALL WEB CONFERENCING INC.,CHICAGO,IL,US	MSHOW.COM, INC.	2002-05-10	013101/0476	2002-07-19
Conveyance: ASSIGNMENT OF ASSIGNORS INTEREST (SEE DOCUMENT FOR DETAILS).				
Corresponent: ALSTON & BIRD LLP KATHLEEN B. HEBERLEIN, ESQ. 1201 W. PEACHTREE ST. ATLANTA, GA 30309-3424				
MSHOW.COM INC.,LITTLETON,CO,US	HOWARD H. LEACH LIVING TRUST	2002-04-29	014033/0395	2003-05-06
Conveyance: BANKRUPTCY ORDER RELEASING ALL LIENS				
Corresponent: WILLKIE FARR & GALLAGHER KIM A. WALKER 787 7TH AVENUE NEW YORK, NY 10019				
HOWARD H. LEACH LIVING TRUST THE U/T/D/ 9/5/86 AS AMENDED,SAN FRANCISCO,CA,US	MSHOW.COM, INC.	2001-02-26	011551/0445	2001-02-26
BLUE CHIP CAPITAL FUND LIMITED PARTNERSHIP,CINCINNATI ,OH,US	-	-	-	-
Conveyance: SECURITY AGREEMENT | SECURITY AGREEMENT				
Corresponent: GIBSON, DUNN & CRUTCHER LLP BRIAN K. FURGASON 1801 CALIFORNIA STREET SUITE 4100 DENVER, CO 80202-2641 | GIBSON, DUNN & CRUTCHER LLP BRIAN K. FURGASON 1801 CALIFORNIA STREET SUITE 4100 DENVER, CO 80202-2641				
HOWARD H. LEACH LIVING TRUST U.D.T. 9/5/86 AS AMENDED 5/30/97,SAN FRANCISCO,CA,US	MSHOW.COM	2000-12-20	011390/0546	2000-12-22
Conveyance: SECURITY INTEREST (SEE DOCUMENT FOR DETAILS).				
Corresponent: GIBSON DUNN & CINTCHER LLP BRIAN FURGUSON 1801 CALIFORNIA STREET SUITE 4100 DENVER, COLORADO 80202-2641				
MSHOW.COM,HIGHLANDS RANCH,CO,US	BROADBAND ASSOCIATES	1999-05-14	011078/0370	2000-08-28

Conveyance: CHANGE OF NAME (SEE DOCUMENT FOR DETAILS).				
Corresponent: SHERIDAN ROSS P.C. DENNIS J. DUPRAY, PH.D. 1560 BROADWAY, SUITE 1200 DENVER, COLORADO 80202-5141				
BROADBAND ASSOCIATES,LITTLETON,CO,US	OGDON, ROBERT H.	1998-03-31	009107/0366	1998-03-31
	JOHNSON, FRANK E.	1998-03-31	-	-
Conveyance: ASSIGNMENT OF ASSIGNORS INTEREST (SEE DOCUMENT FOR DETAILS).				
Corresponent: SHERIDAN ROSS P.C. TODD P. BLAKELY 1700 LINCOLN STREET, SUITE 3500 DENVER, CO 80203				

Maintenance Status (US):

Litigation (US):

Opposition (EP):

License (EP):

EPO Procedural Status:

Front Page Drawing:

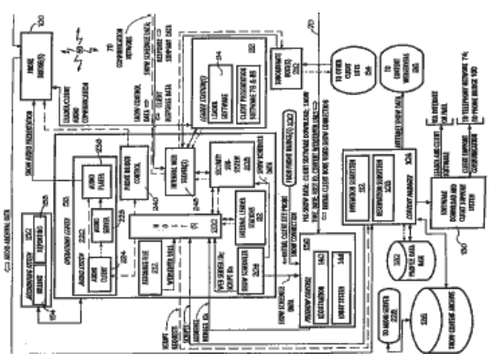

Priority Number - DWPI: US199741770P | US199852862A | WO1998US6667A | US2000624902A | US2000675527A | US2003622358A | US2003737174A | US2006468485A | US2008129041A | US2008265961A | US2010938482A | US2011240076A | US2011278331A | US2012556359A | US14018563A | US2015596011A | US15366766A

Priority Date - DWPI: 1997-03-31 | 1998-03-31 | 1998-03-31 | 2000-07-25 | 2000-09-29 | 2003-07-18 | 2003-12-16 | 2006-08-30 | 2008-05-29 | 2008-11-06 | 2010-11-03 | 2011-09-22 | 2011-10-21 | 2012-07-24 | 2013-09-05 | 2015-01-13 | 2016-12-01

Assignee - Current US: WEST CORPORATION | COSMOSIS CORPORATION | INTERCALL INC. | INTRADO COMMUNICATIONS INC. | INTRADO COMMUNICATIONS OF VIRGINIA INC. | INTRADO INC. | INTRADO INFORMATION SYSTEM HOLDINGS INC. | INTRADO COMMAND SYSTEMS INC. | GEO911 INC. | POSITRON PUBLIC SAFETY SYSTEMS CORP. | MASYS CORPORATION | TELEVOX SOFTWARE INCORPORATED | WEST ASSET MANAGEMENT INC. | WEST DIRECT II INC. | WEST INTERACTIVE CORPORATION | WEST INTERNATIONAL CORPORATION | NORTHERN CONTACT INC. | WEST NOTIFICATIONS GROUP INC. | WEST RECEIVABLE SERVICES INC. | WEST BUSINESS SERVICES LLC | WEST DIRECT LLC | WEST FACILITIES LLC | WEST AT HOME LLC | WEST CUSTOMER MANAGEMENT GROUP LLC | ASSET DIRECT MORTGAGE LLC | INTERCALL TELECOM VENTURES LLC |

BUYDEBTCO LLC | THE DEBT DEPOT LLC | WEST ASSET PURCHASING LLC | INTRADO INTERNATIONAL LLC | STARGATE MANAGEMENT LLC

Copyright 2007-2023 CLARIVATE

United States Patent and Trademark Office

Office of the Commissioner for Patents

METHOD AND SYSTEM FOR PROVIDING A PRESENTATION ON A NETWORK

PATENT #	APPLICATION #	FILING DATE	ISSUE DATE
6161137	09052862	03/31/1998	12/12/2000

Payment Window Status

No maintenance fees are due.

WINDOW	STATUS	FEES
11.5 Year	Closed	Paid

Window	First Day to Pay	Surcharge Starts	Last Day to Pay	Status	Fees
3.5 Year	12/12/2003	06/15/2004	12/13/2004	Closed	Paid
7.5 Year	12/12/2007	06/13/2008	12/12/2008	Closed	Paid
11.5 Year	12/12/2011	06/13/2012	12/12/2012	Closed	Paid

Patent Holder Information

Customer # 29129

Entity Status UNDISCOUNTED

Phone Number 9728491310

Address INTRADO CORPORATION
C/O LEGAL DEPARTMENT
11808 MIRACLE HILLS DR.
MAIL STOP: W11-LEGAL
OMAHA, NE 68154
UNITED STATES