US006161137A

United States Patent [19]

Ogdon et al.

[11] **Patent Number: 6,161,137**

[45] **Date of Patent: Dec. 12, 2000**

[54] **METHOD AND SYSTEM FOR PROVIDING A PRESENTATION ON A NETWORK**

[75] Inventors: **Robert H. Ogdon**, Littleton, Colo.; **Frank E. Johnson**, Aurora, Ill.

[73] Assignee: **MSHOW.com, Inc.**, Highlands Ranch, Colo.

[21] Appl. No.: **09/052,862**

[22] Filed: **Mar. 31, 1998**

Related U.S. Application Data

[60] Provisional application No. 60/041,770, Mar. 31, 1997.

[51] **Int. Cl.**[7] **G06F 15/00**; G06F 15/16

[52] **U.S. Cl.** **709/224**; 709/227; 709/204; 709/231

[58] **Field of Search** 709/204, 224, 709/231, 226, 227; 370/366; 707/104

[56] **References Cited**

U.S. PATENT DOCUMENTS

4,650,929	3/1987	Boerger et al.	358/86
4,710,917	12/1987	Tompkins et al.	370/62
5,003,532	3/1991	Ashida et al.	370/62
5,422,893	6/1995	Gregg et al.	371/32
5,473,363	12/1995	Ng et al.	348/15
5,473,744	12/1995	Allen et al.	395/154
5,473,772	12/1995	Halliwell et al.	395/650
5,473,773	12/1995	Aman et al.	395/650
5,491,797	2/1996	Thompson et al.	395/200.03
5,526,037	6/1996	Cortjens et al.	348/15
5,553,068	9/1996	Aso et al.	370/60
5,555,017	9/1996	Landante et al.	348/15
5,557,607	9/1996	Holden	370/58.2
5,563,878	10/1996	Blakeley	370/60
5,568,183	10/1996	Cortjens et al.	348/15
5,590,127	12/1996	Bales et al.	370/260
5,594,495	1/1997	Palmer et al.	348/17
5,625,410	4/1997	Washino et al.	348/154
5,642,151	6/1997	Nusbickel et al.	348/6
5,684,918	11/1997	Abecassis	386/83
5,758,257	5/1998	Herz et al.	455/2
5,759,101	6/1998	Von Kohorn	463/40
5,774,698	6/1998	Olnowich	370/366
5,848,396	12/1998	Gerace	705/10
5,864,682	1/1999	Porter et al.	709/231
5,867,494	2/1999	Krishnaswamy et al.	370/352
5,928,330	7/1999	Goetz et al.	709/231
5,944,791	8/1999	Scherpbier	709/218
5,948,065	9/1999	Eilert et al.	709/226
5,956,716	9/1999	Kenner et al.	707/10
5,956,729	9/1999	Goetz et al.	707/104
5,999,525	12/1999	Krishnaswamy et al.	370/352

OTHER PUBLICATIONS

Anonymous, "Putting the magic in mulitmedia", Computer Design, v30, n12, p. 31, Sep. 1991.

Adjeroh et al., "Synchronization Mechanisms for Distributed Multimedia Presentation Systems", IEEE, pp. 30–37, Aug. 1995.

Primary Examiner—Zarni Maung
Assistant Examiner—Almari Romero
Attorney, Agent, or Firm—Sheridan Ross P.C.

[57] **ABSTRACT**

A presentation system is disclosed for distributing a performance of a presentation synchronously to a plurality of client nodes on a network such as the Internet. The presentation system distributes presentation content data to a plurality of network server nodes, and during a performance of the presentation, the client nodes receiving the presentation determine a particular variation of data presentation to retrieve from the network server nodes. In particular, the retrieval of presentation data depends upon the transmission characteristics of the network such as data transmission rate. Thus, if a low transmission data rate is detected at a first client node, presentation elements of a reduced size can be retrieved. Alternatively, if a higher transmission rate is detected at a second client node, presentation elements of greater size (and corresponding enhanced quality of presentation) can be retrieved. Thus, within a single performance, client network nodes with varying available network bandwidths can be utilized for synchronously and simultaneously performing the presentation.

43 Claims, 7 Drawing Sheets

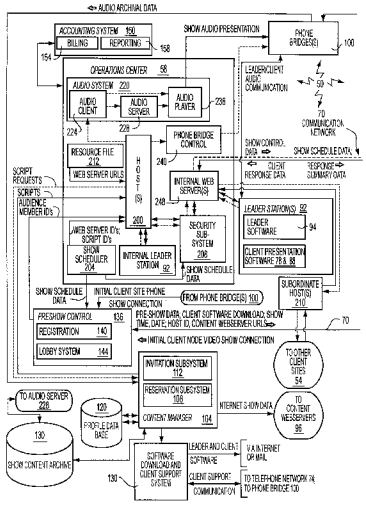

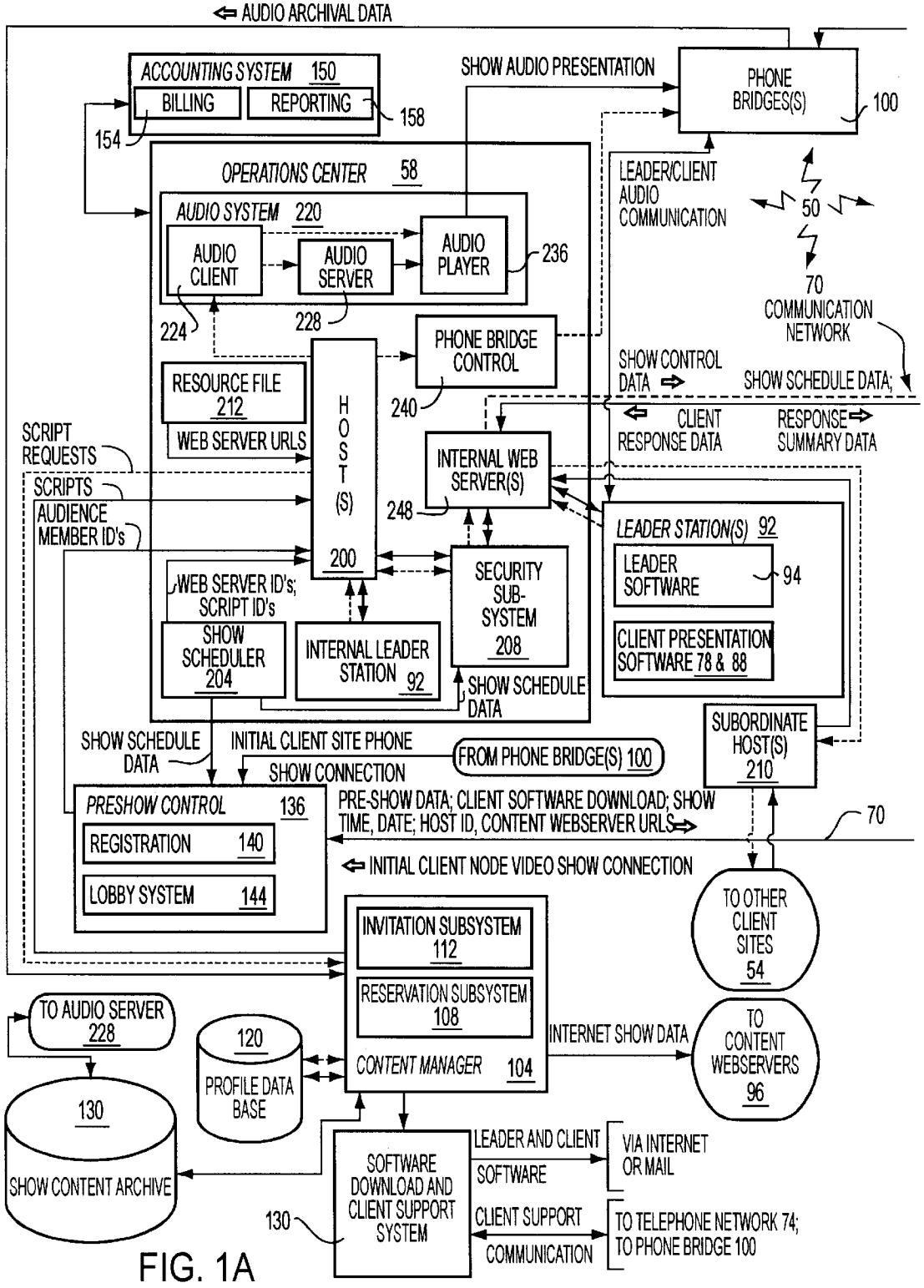
AUDIO ARCHIVAL DATA
ACCOUNTING SYSTEM 150
BILLING
REPORTING
158
154
SHOW AUDIO PRESENTATION
PHONE BRIDGE(S)
100
OPERATIONS CENTER 58
AUDIO SYSTEM 220
AUDIO CLIENT
AUDIO SERVER
AUDIO PLAYER
236
224
228
LEADER/CLIENT AUDIO COMMUNICATION
50
70
COMMUNICATION NETWORK
PHONE BRIDGE CONTROL
240
SHOW CONTROL DATA
SHOW SCHEDULE DATA;
RESOURCE FILE 212
WEB SERVER URLS
HOST(S) 200
CLIENT RESPONSE DATA
RESPONSE SUMMARY DATA
SCRIPT REQUESTS
SCRIPTS
AUDIENCE MEMBER ID's
INTERNAL WEB SERVER(S)
248
LEADER STATION(S) 92
LEADER SOFTWARE
94
WEB SERVER ID's; SCRIPT ID's
SECURITY SUB-SYSTEM 208
SHOW SCHEDULER 204
INTERNAL LEADER STATION 92
CLIENT PRESENTATION SOFTWARE 78 & 88
SHOW SCHEDULE DATA
SUBORDINATE HOST(S) 210
SHOW SCHEDULE DATA
INITIAL CLIENT SITE PHONE
SHOW CONNECTION
FROM PHONE BRIDGE(S) 100
PRESHOW CONTROL 136
REGISTRATION 140
LOBBY SYSTEM 144
PRE-SHOW DATA; CLIENT SOFTWARE DOWNLOAD; SHOW TIME, DATE; HOST ID, CONTENT WEBSERVER URLS
70
INITIAL CLIENT NODE VIDEO SHOW CONNECTION
TO OTHER CLIENT SITES 54
INVITATION SUBSYSTEM 112
RESERVATION SUBSYSTEM 108
CONTENT MANAGER 104
INTERNET SHOW DATA
TO CONTENT WEBSERVERS 96
TO AUDIO SERVER 228
120
PROFILE DATA BASE
130
SHOW CONTENT ARCHIVE
SOFTWARE DOWNLOAD AND CLIENT SUPPORT SYSTEM
130
LEADER AND CLIENT SOFTWARE
VIA INTERNET OR MAIL
CLIENT SUPPORT COMMUNICATION
TO TELEPHONE NETWORK 74; TO PHONE BRIDGE 100

FIG. 1A

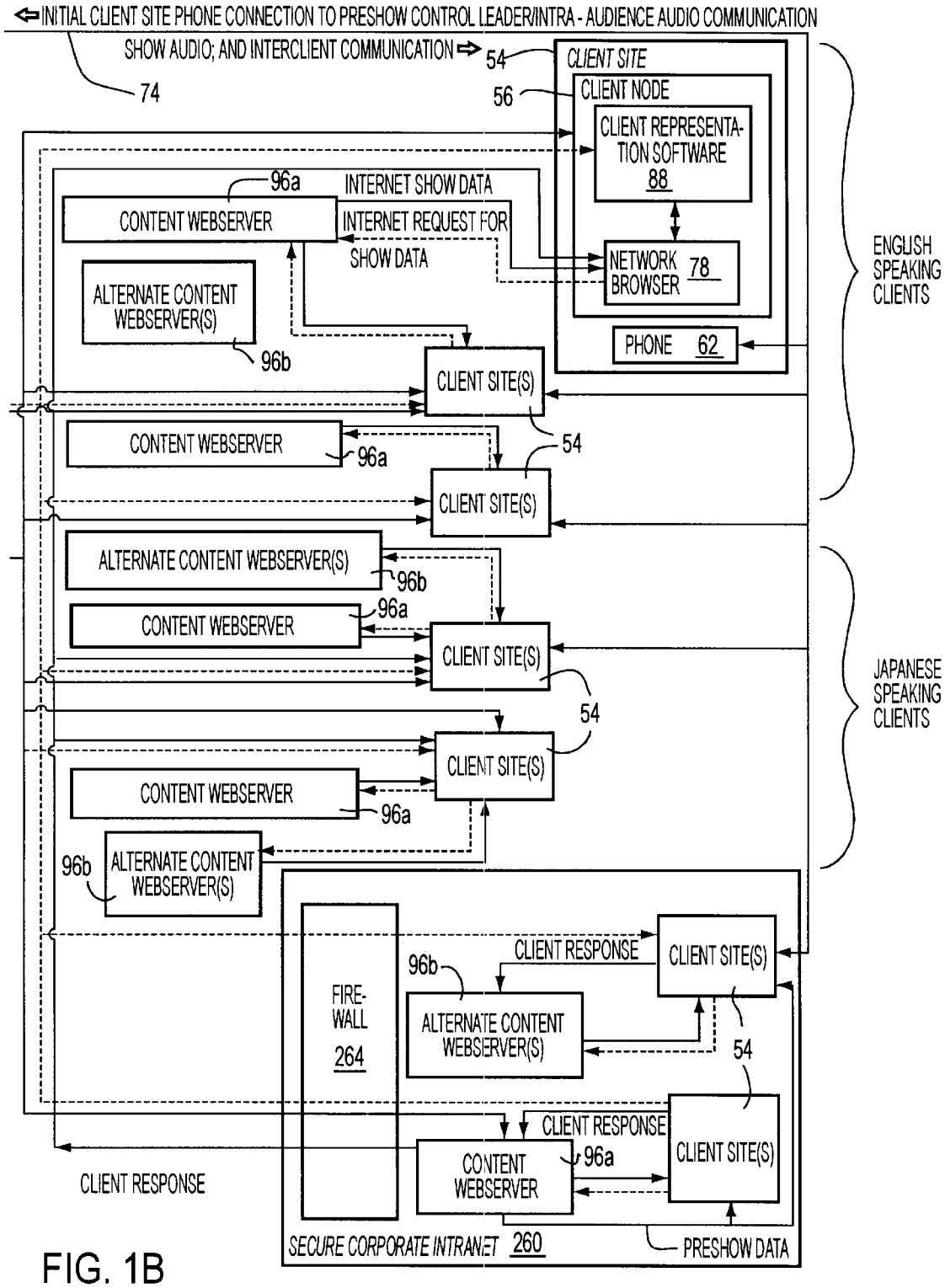
INITIAL CLIENT SITE PHONE CONNECTION TO PRESHOW CONTROL LEADER/INTRA - AUDIENCE AUDIO COMMUNICATION
SHOW AUDIO; AND INTERCLIENT COMMUNICATION
74
54
CLIENT SITE
56
CLIENT NODE
CLIENT REPRESENTATION SOFTWARE 88
96a
INTERNET SHOW DATA
CONTENT WEBSERVER
INTERNET REQUEST FOR SHOW DATA
NETWORK BROWSER 78
ALTERNATE CONTENT WEBSERVER(S)
96b
PHONE 62
CLIENT SITE(S)
ENGLISH SPEAKING CLIENTS
CONTENT WEBSERVER
96a
54
CLIENT SITE(S)
ALTERNATE CONTENT WEBSERVER(S)
96b
CONTENT WEBSERVER
96a
CLIENT SITE(S)
54
JAPANESE SPEAKING CLIENTS
CLIENT SITE(S)
CONTENT WEBSERVER
96a
96b
ALTERNATE CONTENT WEBSERVER(S)
FIRE-WALL 264
CLIENT RESPONSE
CLIENT SITE(S)
96b
ALTERNATE CONTENT WEBSERVER(S)
54
CLIENT RESPONSE
CONTENT WEBSERVER
96a
CLIENT SITE(S)
CLIENT RESPONSE
SECURE CORPORATE INTRANET 260
PRESHOW DATA

FIG. 1B

FIG. 2A

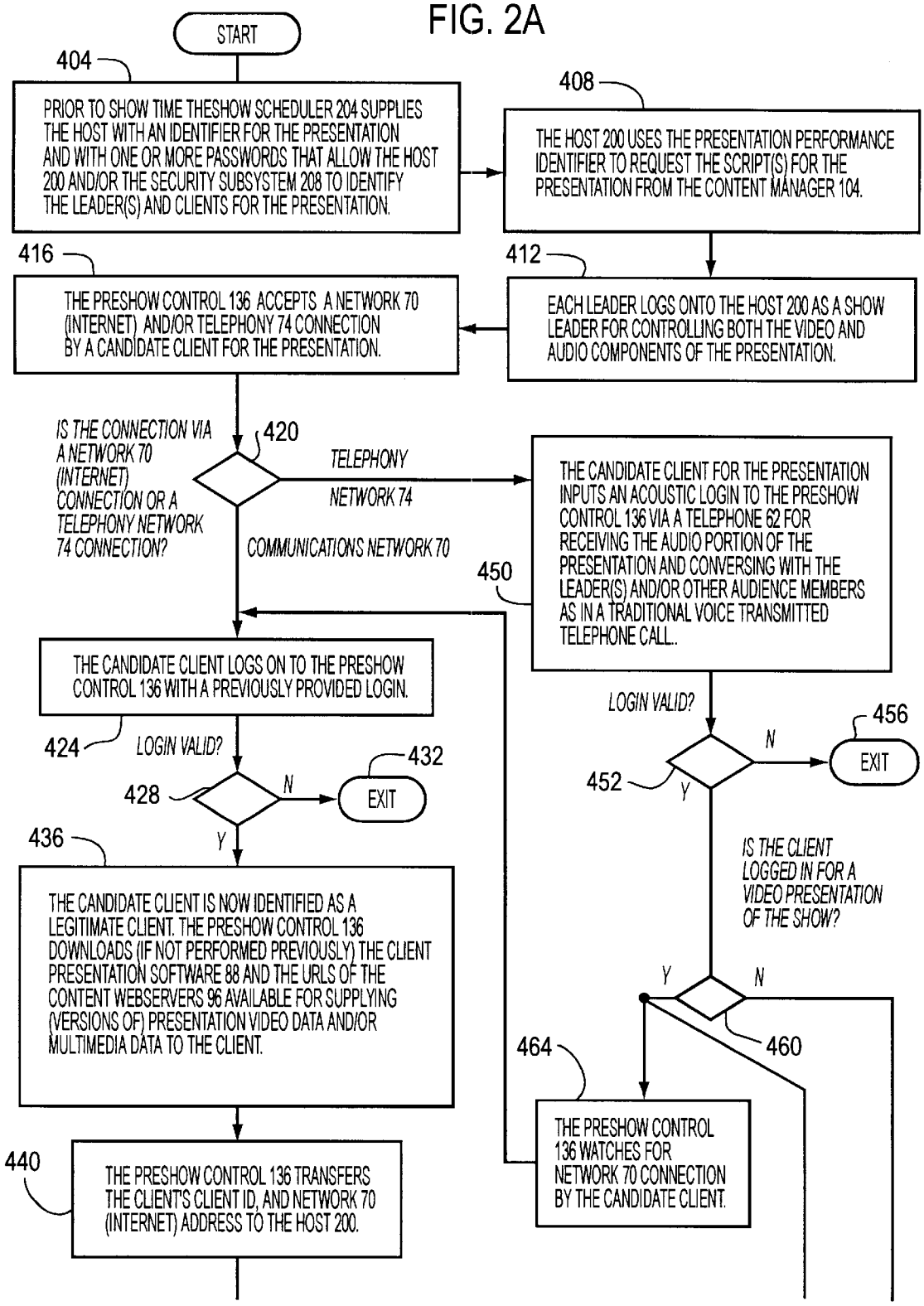
START
404
PRIOR TO SHOW TIME THESHOW SCHEDULER 204 SUPPLIES THE HOST WITH AN IDENTIFIER FOR THE PRESENTATION AND WITH ONE OR MORE PASSWORDS THAT ALLOW THE HOST 200 AND/OR THE SECURITY SUBSYSTEM 208 TO IDENTIFY THE LEADER(S) AND CLIENTS FOR THE PRESENTATION.
408
THE HOST 200 USES THE PRESENTATION PERFORMANCE IDENTIFIER TO REQUEST THE SCRIPT(S) FOR THE PRESENTATION FROM THE CONTENT MANAGER 104.
412
EACH LEADER LOGS ONTO THE HOST 200 AS A SHOW LEADER FOR CONTROLLING BOTH THE VIDEO AND AUDIO COMPONENTS OF THE PRESENTATION.
416
THE PRESHOW CONTROL 136 ACCEPTS A NETWORK 70 (INTERNET) AND/OR TELEPHONY 74 CONNECTION BY A CANDIDATE CLIENT FOR THE PRESENTATION.
IS THE CONNECTION VIA A NETWORK 70 (INTERNET) CONNECTION OR A TELEPHONY NETWORK 74 CONNECTION?
420
TELEPHONY NETWORK 74
COMMUNICATIONS NETWORK 70
450
THE CANDIDATE CLIENT FOR THE PRESENTATION INPUTS AN ACOUSTIC LOGIN TO THE PRESHOW CONTROL 136 VIA A TELEPHONE 62 FOR RECEIVING THE AUDIO PORTION OF THE PRESENTATION AND CONVERSING WITH THE LEADER(S) AND/OR OTHER AUDIENCE MEMBERS AS IN A TRADITIONAL VOICE TRANSMITTED TELEPHONE CALL..
THE CANDIDATE CLIENT LOGS ON TO THE PRESHOW CONTROL 136 WITH A PREVIOUSLY PROVIDED LOGIN.
424
LOGIN VALID?
428
N
EXIT
432
Y
LOGIN VALID?
452
N
EXIT
456
Y
IS THE CLIENT LOGGED IN FOR A VIDEO PRESENTATION OF THE SHOW?
Y
N
460
436
THE CANDIDATE CLIENT IS NOW IDENTIFIED AS A LEGITIMATE CLIENT. THE PRESHOW CONTROL 136 DOWNLOADS (IF NOT PERFORMED PREVIOUSLY) THE CLIENT PRESENTATION SOFTWARE 88 AND THE URLS OF THE CONTENT WEBSERVERS 96 AVAILABLE FOR SUPPLYING (VERSIONS OF) PRESENTATION VIDEO DATA AND/OR MULTIMEDIA DATA TO THE CLIENT.
464
THE PRESHOW CONTROL 136 WATCHES FOR NETWORK 70 CONNECTION BY THE CANDIDATE CLIENT.
440
THE PRESHOW CONTROL 136 TRANSFERS THE CLIENT'S CLIENT ID, AND NETWORK 70 (INTERNET) ADDRESS TO THE HOST 200.

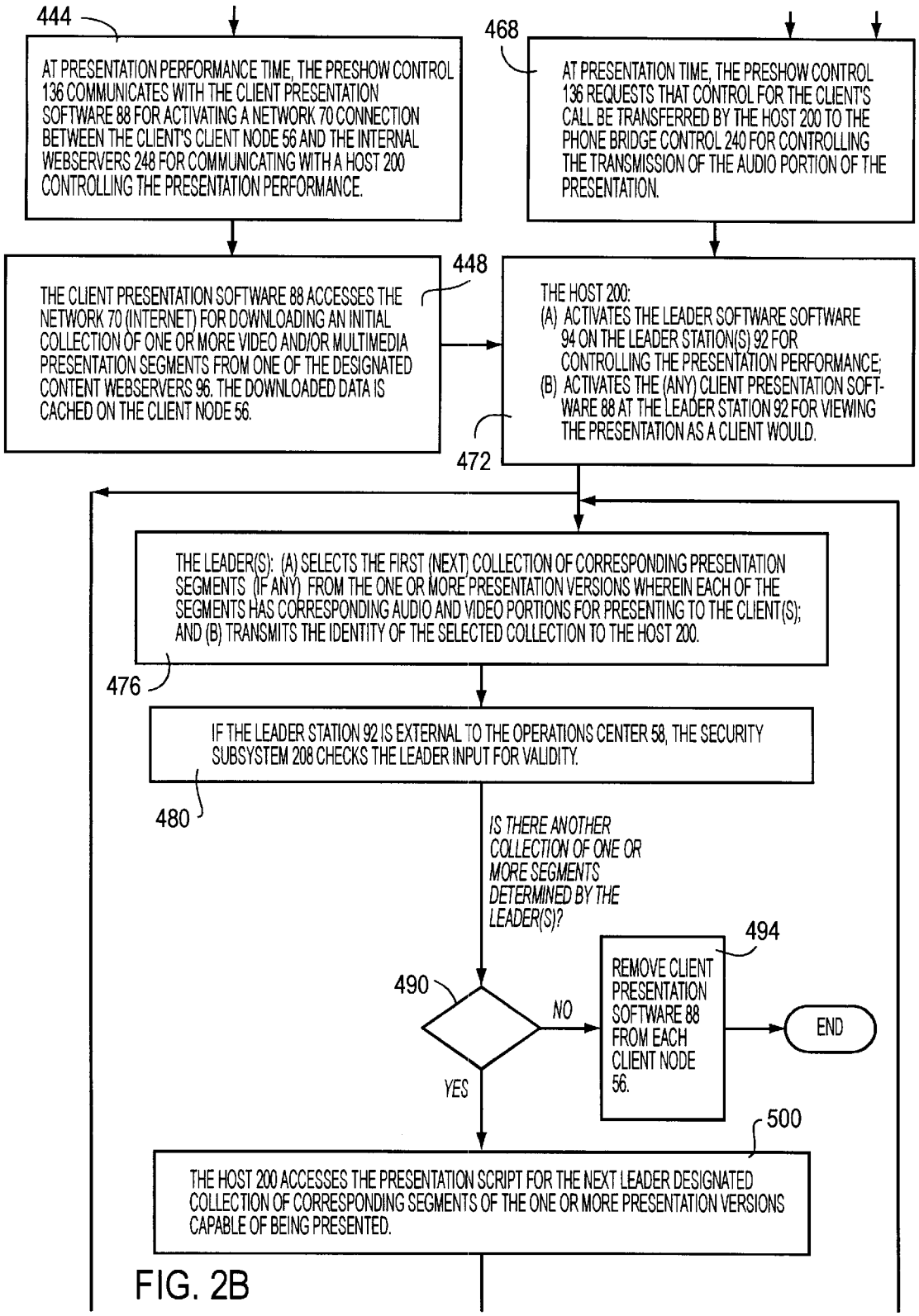
444
AT PRESENTATION PERFORMANCE TIME, THE PRESHOW CONTROL 136 COMMUNICATES WITH THE CLIENT PRESENTATION SOFTWARE 88 FOR ACTIVATING A NETWORK 70 CONNECTION BETWEEN THE CLIENT'S CLIENT NODE 56 AND THE INTERNAL WEBSERVERS 248 FOR COMMUNICATING WITH A HOST 200 CONTROLLING THE PRESENTATION PERFORMANCE.
468
AT PRESENTATION TIME, THE PRESHOW CONTROL 136 REQUESTS THAT CONTROL FOR THE CLIENT'S CALL BE TRANSFERRED BY THE HOST 200 TO THE PHONE BRIDGE CONTROL 240 FOR CONTROLLING THE TRANSMISSION OF THE AUDIO PORTION OF THE PRESENTATION.
448
THE CLIENT PRESENTATION SOFTWARE 88 ACCESSES THE NETWORK 70 (INTERNET) FOR DOWNLOADING AN INITIAL COLLECTION OF ONE OR MORE VIDEO AND/OR MULTIMEDIA PRESENTATION SEGMENTS FROM ONE OF THE DESIGNATED CONTENT WEBSERVERS 96. THE DOWNLOADED DATA IS CACHED ON THE CLIENT NODE 56.
THE HOST 200:
(A) ACTIVATES THE LEADER SOFTWARE SOFTWARE 94 ON THE LEADER STATION(S) 92 FOR CONTROLLING THE PRESENTATION PERFORMANCE;
(B) ACTIVATES THE (ANY) CLIENT PRESENTATION SOFTWARE 88 AT THE LEADER STATION 92 FOR VIEWING THE PRESENTATION AS A CLIENT WOULD.
472
THE LEADER(S): (A) SELECTS THE FIRST (NEXT) COLLECTION OF CORRESPONDING PRESENTATION SEGMENTS (IF ANY) FROM THE ONE OR MORE PRESENTATION VERSIONS WHEREIN EACH OF THE SEGMENTS HAS CORRESPONDING AUDIO AND VIDEO PORTIONS FOR PRESENTING TO THE CLIENT(S); AND (B) TRANSMITS THE IDENTITY OF THE SELECTED COLLECTION TO THE HOST 200.
476
IF THE LEADER STATION 92 IS EXTERNAL TO THE OPERATIONS CENTER 58, THE SECURITY SUBSYSTEM 208 CHECKS THE LEADER INPUT FOR VALIDITY.
480
IS THERE ANOTHER COLLECTION OF ONE OR MORE SEGMENTS DETERMINED BY THE LEADER(S)?
490
NO
YES
494
REMOVE CLIENT PRESENTATION SOFTWARE 88 FROM EACH CLIENT NODE 56.
END
500
THE HOST 200 ACCESSES THE PRESENTATION SCRIPT FOR THE NEXT LEADER DESIGNATED COLLECTION OF CORRESPONDING SEGMENTS OF THE ONE OR MORE PRESENTATION VERSIONS CAPABLE OF BEING PRESENTED.

FIG. 2B

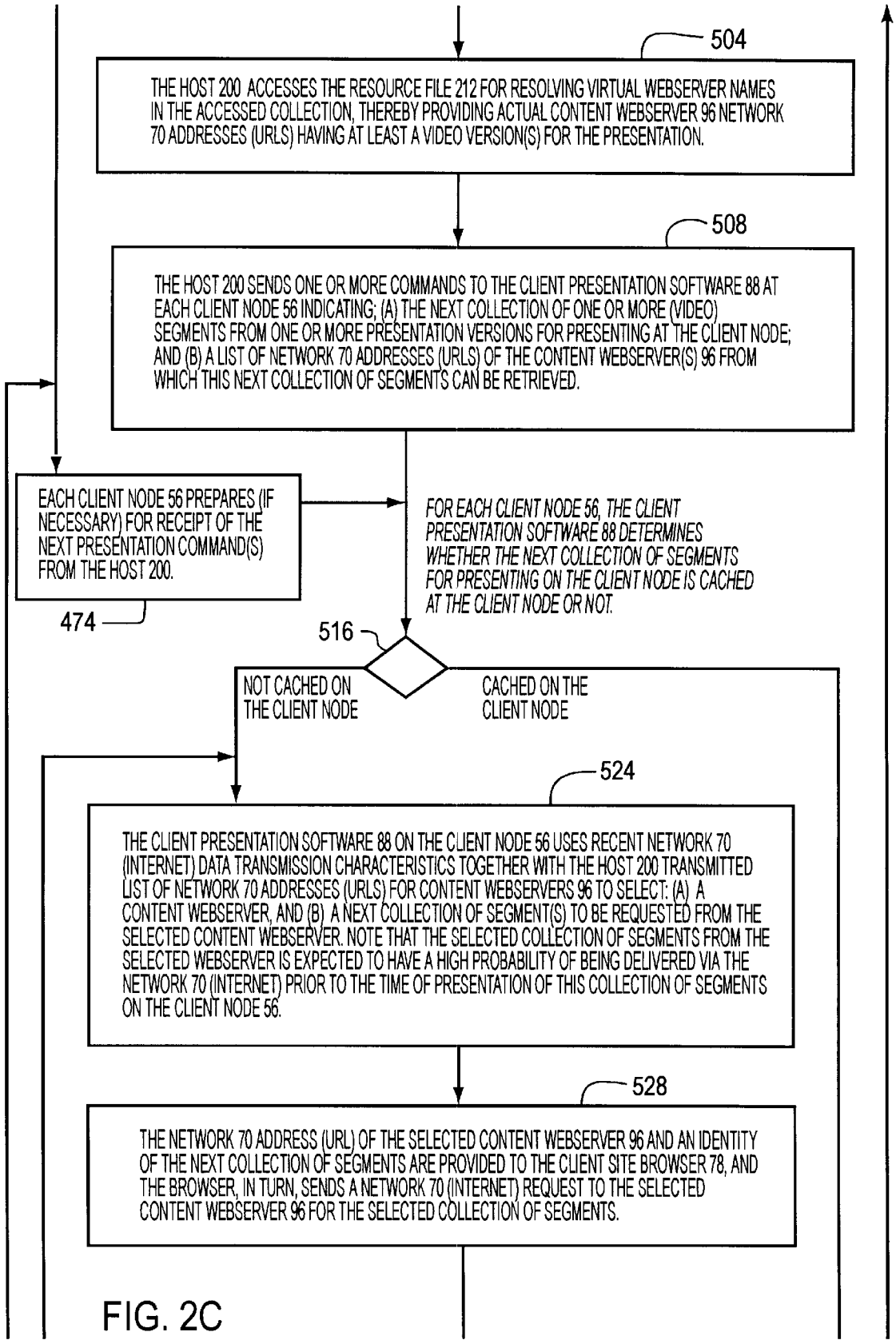
504
THE HOST 200 ACCESSES THE RESOURCE FILE 212 FOR RESOLVING VIRTUAL WEBSERVER NAMES IN THE ACCESSED COLLECTION, THEREBY PROVIDING ACTUAL CONTENT WEBSERVER 96 NETWORK 70 ADDRESSES (URLS) HAVING AT LEAST A VIDEO VERSION(S) FOR THE PRESENTATION.
508
THE HOST 200 SENDS ONE OR MORE COMMANDS TO THE CLIENT PRESENTATION SOFTWARE 88 AT EACH CLIENT NODE 56 INDICATING; (A) THE NEXT COLLECTION OF ONE OR MORE (VIDEO) SEGMENTS FROM ONE OR MORE PRESENTATION VERSIONS FOR PRESENTING AT THE CLIENT NODE; AND (B) A LIST OF NETWORK 70 ADDRESSES (URLS) OF THE CONTENT WEBSERVER(S) 96 FROM WHICH THIS NEXT COLLECTION OF SEGMENTS CAN BE RETRIEVED.
EACH CLIENT NODE 56 PREPARES (IF NECESSARY) FOR RECEIPT OF THE NEXT PRESENTATION COMMAND(S) FROM THE HOST 200.
474
FOR EACH CLIENT NODE 56, THE CLIENT PRESENTATION SOFTWARE 88 DETERMINES WHETHER THE NEXT COLLECTION OF SEGMENTS FOR PRESENTING ON THE CLIENT NODE IS CACHED AT THE CLIENT NODE OR NOT.
516
NOT CACHED ON THE CLIENT NODE
CACHED ON THE CLIENT NODE
524
THE CLIENT PRESENTATION SOFTWARE 88 ON THE CLIENT NODE 56 USES RECENT NETWORK 70 (INTERNET) DATA TRANSMISSION CHARACTERISTICS TOGETHER WITH THE HOST 200 TRANSMITTED LIST OF NETWORK 70 ADDRESSES (URLS) FOR CONTENT WEBSERVERS 96 TO SELECT: (A) A CONTENT WEBSERVER, AND (B) A NEXT COLLECTION OF SEGMENT(S) TO BE REQUESTED FROM THE SELECTED CONTENT WEBSERVER. NOTE THAT THE SELECTED COLLECTION OF SEGMENTS FROM THE SELECTED WEBSERVER IS EXPECTED TO HAVE A HIGH PROBABILITY OF BEING DELIVERED VIA THE NETWORK 70 (INTERNET) PRIOR TO THE TIME OF PRESENTATION OF THIS COLLECTION OF SEGMENTS ON THE CLIENT NODE 56.
528
THE NETWORK 70 ADDRESS (URL) OF THE SELECTED CONTENT WEBSERVER 96 AND AN IDENTITY OF THE NEXT COLLECTION OF SEGMENTS ARE PROVIDED TO THE CLIENT SITE BROWSER 78, AND THE BROWSER, IN TURN, SENDS A NETWORK 70 (INTERNET) REQUEST TO THE SELECTED CONTENT WEBSERVER 96 FOR THE SELECTED COLLECTION OF SEGMENTS.

FIG. 2C

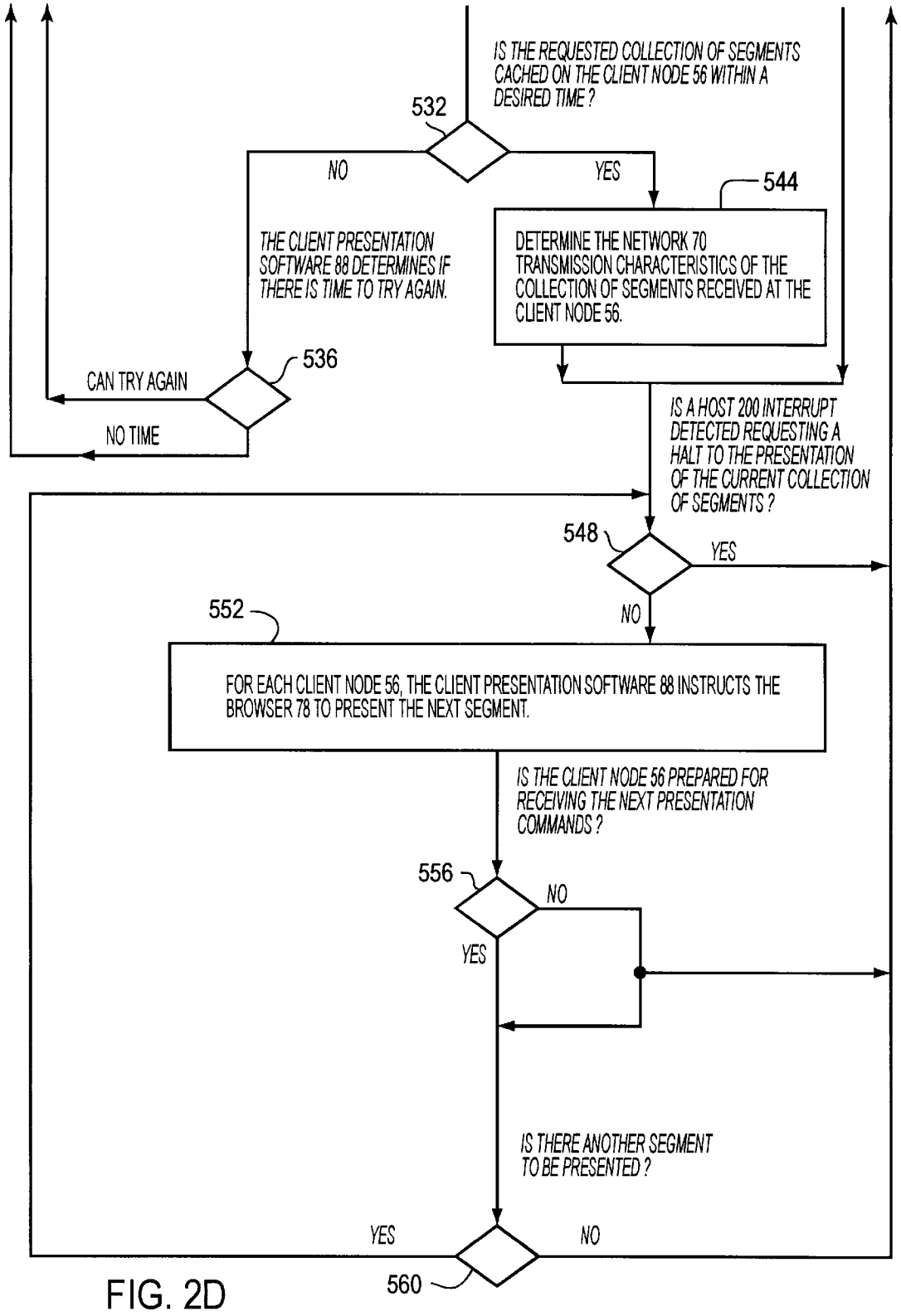
IS THE REQUESTED COLLECTION OF SEGMENTS CACHED ON THE CLIENT NODE 56 WITHIN A DESIRED TIME ?
532
NO
YES
544
THE CLIENT PRESENTATION SOFTWARE 88 DETERMINES IF THERE IS TIME TO TRY AGAIN.
DETERMINE THE NETWORK 70 TRANSMISSION CHARACTERISTICS OF THE COLLECTION OF SEGMENTS RECEIVED AT THE CLIENT NODE 56.
536
CAN TRY AGAIN
NO TIME
IS A HOST 200 INTERRUPT DETECTED REQUESTING A HALT TO THE PRESENTATION OF THE CURRENT COLLECTION OF SEGMENTS ?
548
YES
NO
552
FOR EACH CLIENT NODE 56, THE CLIENT PRESENTATION SOFTWARE 88 INSTRUCTS THE BROWSER 78 TO PRESENT THE NEXT SEGMENT.
IS THE CLIENT NODE 56 PREPARED FOR RECEIVING THE NEXT PRESENTATION COMMANDS ?
556
NO
YES
IS THERE ANOTHER SEGMENT TO BE PRESENTED ?
YES
NO
560

FIG. 2D

600

	612 SCRIPT LEVEL	616 ITEM #	620 VIRTUAL TIME HR:MIN:SEC	624 ACTION	632 RESOURCE TYPE	636 RESOURCE LOCATION	640 RESOURCE NAME
608a	1	1	0.00	Client_Load	FTP File	Server Name (SN)	Path + File *
608b	2				FTP Dir	Server Name	Path
608c	3			client_Free	FTP File	"TWFTP"	File
608d	1,2			client_Display	HTML_File	SN | TWFTP | CD| LOCAL	Path + File | File *
608e	1,3	2	1:01.00		MC_Question	SN | TWFTP | CD| LOCAL	Path + File | File *
608f	2,3				MC_Answer	SN | TWFTP | CD| LOCAL	Path + File | File *
608g	1,2,3				Info_Form	SN | TWFTP | CD| LOCAL	Path + File | File *
608h	1,2,3			client_Play	Audio_RaFile	Server Name	Path + File *
608i	1,2,3				Audio_RaLive	Server Name	Encoder Task
608j	1,2,3		0.00	leader_Hold	———	———	———
608k	1,2,3			time_Set_At	"THIS LINE"	———	———
608l	1,2,3			time_Hold_To	HTML_File	"END" | "GOT"	———
608m	1,2,3				Audio_RaFile	"END"	———
608n	1,2,3			child_Script	TW script	"this"	Path + File
608o	1,2,3			End_Start	———	———	———
608p	1,2,3	999		END	———	———	———
608q	END						

FIG. 3

fuboTV Media Inc.
Exhibit 1004
Page 008

METHOD AND SYSTEM FOR PROVIDING A PRESENTATION ON A NETWORK

The present application claims the benefit of U.S. Provisional Application Ser. No. 06/041,770, filed Mar. 31, 1997.

FIELD OF THE INVENTION

The present invention relates to a networked presentation system for providing a presentation to a plurality of client nodes on a communications network such as the Internet, and more particularly to a presentation system wherein network transmission characteristics are utilized in determining the presentation materials presented at each client node during a performance of the presentation.

BACKGROUND OF THE INVENTION

Interactive or live presentations via a telecommunications network (i.e., "telepresentations" such as teleconferences etc.) are becoming a viable alternative to face-to-face meetings due to the greater cost effectiveness of such telepresentations. However, there is still substantial expense in conducting such a telepresentation, particularly when the presentation members (i.e., presentation leaders and audience members) reside at a large number of geographically scattered sites. In particular, each of the sites may require specialized video conferencing systems with high data transmission lines for connecting the telepresentation members. Thus, due to the expense of provisioning and maintaining such networked conferencing systems, corporations typically have only a small number of such conferencing systems at strategically located telepresentation centers for conducting such telepresentations. However, there are numerous drawbacks to this approach, such as:

(1.1) The dedicated telepresentation centers are expensive to maintain;

(1.2) Presentation participants are still required to travel to these centers; and

(1.3) Potential members of such a presentation who are not able to access such a center are excluded from the presentation.

Accordingly, it would be advantageous to have a network presentation distribution system that alleviates these drawbacks, wherein such a system would allow individuals to access and/or participate in a presentation using standard telephony and Internet network connections found in most offices and many homes.

SUMMARY OF THE INVENTION

The present invention is a network presentation distribution system for providing a presentation, via one or more communication networks, to a plurality of presentation members simultaneously. That is, the present invention distributes a presentation synchronously to presentation members via the one or more communication networks, wherein a communication network is defined as both the physical components and the communication protocol(s) utilized on the network components and wherein the term, "presentation members" (also denoted "users"), includes both audience members (also denoted "clients") and presentation leaders. Moreover, the present invention provides interactive and/or real-time presentations to presentation members that are geographically scattered when each such member has access to one or more commonly available communication networks such as the Internet and a conventional telephony network for telephone-to-telephone voice

communication. For example, the present invention may communicate the video portion of a presentation to a user site via the Internet (more generally, via any TCP/IP network) while a corresponding audio portion may be communicated to the user site via a conventional telephony network and a conventional telephone at the user site. However, other embodiments are also within the scope of the present invention. For example, both the video and audio portions of the presentation may be provided solely by a TCP/IP network such as the Internet, assuming that there is sufficient communication bandwidth to synchronize presentation transmissions to the presentation members.

The present invention distributes a presentation (synonymously also denoted a "show") to presentation members by a novel distribution of presentation materials among network server nodes of a TCP/IP network (hereinafter assumed to be the Internet for simplicity). That is, due to the typically "bursty" nature of transmissions between nodes of such a network, a version of the presentation may be accessed synchronously from different network server nodes, or different versions of the presentation may be accessed synchronously from one or more of the network server nodes. Thus, in one embodiment, the present invention provides for a plurality of at least one of:

(2.1) One or more network server nodes (each hereinafter also denoted synonymously as a "network server," "content webserver", "content supplying node", and "supplying node"), whereby audience members receive presentation materials; and/or

(2.2) Different versions of the same presentation, accessible from the one or more of the content webservers, wherein each version may be for a different group of audience members such as a group for Japanese speaking audience members, or audience members affiliated with a particular organization.

Note that each of the one or more presentation versions includes one or more presentation segments (hereinafter also denoted simply "segments") that provide different portions of the presentation. More precisely, subcollections each having one or more segments are provided as presentation "elements" in that each such subcollection is intended to be an indivisible portion of a presentation performance. Moreover, each version of a presentation typically has its subcollections of segments (i.e, presentation elements) ordered according to their presentation sequence. Moreover, substantially every segment (or subcollections thereof) in one version corresponds with a segment (or subcollections thereof) having the same presentation order, in each of the other versions. Thus, assuming corresponding segments (or subcollections thereof) in different versions have approximately the same presentation duration, any of the corresponding alternative segments (or subcollections thereof) from different versions can be presented as a replacement for another such corresponding segment (or subcollection) during the presentation. Thus, it is an aspect of the present invention to provide corresponding alternative segments (or subcollections thereof) having substantially different network transmission requirements so that such corresponding alternative segments (or subcollections thereof) can be substituted for one another depending on the performance of the communications network. For example, the segments (subcollections) of a first version of a presentation may require a network transmission rate sufficient for real time or animated video and the segments for another version of the presentation may only require a transmission rate sufficient for graphic slides. Thus, of a set of corresponding segments (subcollections), one segment (subcollection) may merely

be an audio presentation via a telephone, whereas an alternative segment (subcollection) may be a multimedia presentation element that is a combination of one or more of the following types of HTML multimedia data: audio, images, animation or video, wherein such a multimedia element plays over a set period of time and can be as simple as a single image or as complex as a combination of images, audio, animation and video. Furthermore, segments may include interactive questions that audience members answer by, e.g., clicking on their display screens.

Note that it is also an aspect of the present invention that an ordering of predefined segments (or subcollections thereof) is capable of being presented and archived, and subsequently represented. Moreover, such an ordering can take into account alternative segments for the presentation. Thus, multiple sequentially-ordered scripts can be created so that the leader can choose to change scripts in the middle of a presentation based on user feedback. Accordingly, a presentation leader has the ability to stop presentation of a particular script and its current subcollection of segments and change to a different subcollection of segments to be delivered to the audience. Subsequently, the leader can then resume the initial script at any time.

Accordingly, to take advantage of this novel distribution of presentation materials, the present invention coordinates and controls computations and presentations at each client network node for each presentation audience member (hereinafter each such network node also may be synonymously denoted as a "client node," "user network node" or simply "user node") substantially simultaneously. In particular, one or more presentation controlling network connected nodes (each hereinafter also denoted a "host node") is provided for transmitting presentation controlling commands to the client nodes so that there is retrieval of the presentation segments from one or more versions of the one or more network content server nodes depending on, for example, performance characteristics of network transmissions. Thus, it is an aspect of the present invention to dynamically and adaptively switch between content webservers and/or versions of the presentation according to network transmission characteristics at each client network node so that the clients at the client nodes have presented to them simultaneously, synchronously and in real time, corresponding (in content) segments of the presentation. For example, a first client (at a first client node) may experience the presentation as an ordered series of presentation segments, wherein the first and second ordered segments are presented in full animation, wherein the first of the ordered segments is obtained from a first content webserver and the second segment of the ordered segments is obtained from a second content webserver. Moreover, synchronously with the presentation to the first client, a second client (at a second client node) may experience the presentation in a slide show format from a third content webserver, wherein the initial two segments presented are corresponding alternative segments to the first and second segments presented to the first client. Additionally, a third client may synchronously experience the first segment of the presentation via network transmissions from the first content webserver but subsequently experience the corresponding slide show alternative to the second segment from the third content webserver due to, for example, network transmission slowdowns.

It is a further aspect of the present invention to synchronously provide audio and video portions of the presentation through different communication channels (a communication channel being a physical signal transport path together with a particular signal protocol). For example, in one embodiment of the present invention (denoted hereinafter the "Telephony/Internet embodiment"), the audio portion of the presentation is communicated audibly directly to a standard telephone using conventional voice grade telephony transmissions, and the corresponding video portion of the presentation is transmitted via a different network such as the Internet (more generally referred to herein as a "communications network") using, e.g., a modem to interpret the transmission signals.

It is a further aspect of the present invention to provide the same audio presentation portion to each client, and in this manner, maintain the continuity of the presentation between clients. Thus, regardless of the version of the video presentation provided, the clients have their presentations synchronized by at least experiencing simultaneously the same audio presentation.

It is also an aspect of the present invention to allow presentation members to communicate with one another. For example, in the Telephony/Internet embodiment, a client may communicate with other presentation members (including the presentation leader) during the presentation via the phone and/or by Internet messaging.

In providing the above capabilities of the network presentation distribution system of the present invention, one or more of the previously mentioned presentation controlling network nodes ("host nodes") are utilized, wherein these nodes direct the flow of the presentation data between the presentation members. For example, in the Telephony/Internet embodiment, such a host node, upon receiving the presentation instructions from a presentation leader indicating the next presentation segment(s) to be presented, transmits Internet presentation control signals to each of the client nodes identifying the next collection of corresponding versions of video segments from which each client node is to select a video segment for presenting. Additionally, the host node coordinates any accompanying audio portion for this segment so that the timing for the presentation of these audio and video portions of the segment(s) are synchronized.

Moreover, during a presentation a host node provides a leader of the presentation with the ability to establish and control audience member involvement in the presentation. In particular, in the Telephony/Internet embodiment, this aspect of the invention is provided by the leader controlling the functionality of one or more phone bridges through which all the audio communication during the presentation may be routed. Accordingly, at any point the leader can speak into a microphone and broadcast his/her live voice to the audience members through the phone bridge(s). This live voice audio is automatically mixed with any segment audio concurrently being provided by the phone bridge(s). The leader can control the volume of the segment audio routed through the phone bridge(s) via controls at a leader control station (or simply "leader station"). When enabled by one of the phone bridges, the leader can also control the relative volume of his/her microphone. Otherwise the audio presentation portion routed through the phone bridge(s) is balanced by the automatic gain control on the phone bridge(s).

It is also an aspect of the present invention that any audience member can "request the microphone," from the leader to speak to the presentation audience. Accordingly, the leader has the ability to allow an audience member to speak to the entire audience. The leader can, of course, also choose to stop such audience participation at any time. Thus, the presentation leader may enable and disable audience member involvement during the presentation.

It is also an aspect of the present invention that whenever an on-screen question is answered by audience members, the results are automatically collected and can be graphed. The leader can choose to display the graphical results to all of the audience members. An audience profile database may be created with the data obtained from each audience member. Note that the audience profile database is maintained beyond any one presentation if such is desired.

It is yet another aspect of the present invention that in parallel with all of the other types of interactions between presentation members, text messaging between the leader and any or all of the audience members is done through a messaging window. Further, audience members can send private messages to the leader as well as each other. These messages can be read during the presentation without interrupting the flow of the presentation.

In another embodiment of the present invention, note that both the video and audio portions for a presentation may be provided by the Internet. Moreover, the present embodiment and the Telephony/Internet embodiment discussed above may be intermixed during a presentation so that some clients may receive the entire presentation via the Internet (more generally, via a communications network having physical transport and protocol(s) for supporting multimedia presentations) whereas other clients may receive the audio portion of the presentation via telephony transmissions of conventional voice communication through a telephone handset.

Thus, audience members may simultaneously receive a coordinated sequence of multimedia data controlled by the leader to be displayed, e.g., by an Internet browser such as Netscape Navigator or Microsoft Internet Explorer. Moreover, the present invention supports standard media types, e.g., GIF animation, as well as plug-in components such as Java and Shockwave for presenting the data (audio, graphic images, animation and video) in real time at an audience member's browser. Furthermore, several variations of presentation content can be delivered based on, e.g., the current bandwidth available and the client's affiliated network server(s).

Accordingly, the following advantages are provided by the present invention.

(3.1) Allocated Bandwidth for Server Data Availability:

The present invention allows the leader to selectively organize the number of audience members drawing data from a particular communications network server. By limiting the number of audience members on such a server to no more than 75, and controlling the presentation services provided to audience members, presentation related data availability is enhanced for audience members.

(3.2) Enhanced Reliability Through Distributed Components:

The present invention supports presentation content being distributed to any number of communications network (web) servers for enhanced reliability. Thus, if one of these network servers becomes inaccessible during a presentation, the present invention utilizes a notion of "virtual servers" (i.e., a collection of a number of communications network servers from which presentation data can be selectively transmitted) for determining an alternative communications network server. Accordingly, this allows the clients (audience members) using the affected communications network server to be switched to another network server in the virtual server collection during the presentation.

(3.3) Evens out "Bursting" of Data by Distributing Its Delivery:

Although each segment of a presentation is treated as a unique (multi)media element, the present invention is capable of delivering an entire collection of presentation segments to a client node while the presentation is being performed. This enables a more smooth flow of data during the presentation even though the segments may be transferred to client nodes in bursts.

(3.4) Monitors Transmission Bandwidth and Alternate Data:

Even with enhanced presentation data availability and distributed communications network (e.g. web) servers, there is still the possibility of data delays from a slow network server of a saturated communications network (e.g., Internet) service provider. Accordingly, the present invention monitors: (a) characteristics of network transmissions of presentation materials to client nodes, e.g., the transmission network bandwidth (e.g., the data transmission rate), and (b) the amount of data cached on each client's node. Thus, when the data required for a segment is not timely cached prior to its intended performance at a client's node, alternate segment data is automatically requested from the communications network by the client node. In particular, the client node may request the segment data from an alternate communications network server through network address (URL) selection of the alternate communications network server.

(3.5) Allows Presentation Participants to Reconnect and Synchronize with a Presentation in Progress:

If a presentation participant is disconnected from the communications network (e.g., Internet) during a presentation, there is a simple reconnect option to put the participant back in the presentation synchronized with the rest of the participants. Note that since the audio portion may be provided via a separate telephony (voice communication) network, it is likely that the disconnected participant is able to maintain the continuity of the presentation.

(3.6) Utilizes Controlled Client Requests:

For a given presentation, the present invention directs each client node to request presentation content from a given set of communications network servers rather than having such servers push presentation content to the client node. Among other advantages, this enables dynamic control of the pace of the presentation by a presentation leader while each client node selects specific display materials to attain that pace. Moreover, this strategy of requesting presentation content is typically not blocked by network firewalls such as are common in communicating with secure corporate intranets.

(3.7) Allows a Presentation to be Provided in Several Languages Simultaneously:

The present invention's distributed network processing architecture makes it possible to present concurrently a presentation with content provided in natural languages specific to the audience members. For example, for the same presentation performance, different audience members may have the audio portion of the presentation presented in different languages, e.g., English and Japanese. Moreover, the video content (e.g., on HTML pages) can be specified so that written text provided in the presentation can be displayed in different natural languages, depending on audience member preference.

(3.8) Cooperates with Firewalls:

The present invention allows confidential presentation data to be kept within a corporate intranet behind a

firewall (i.e., a network security feature that restricts communications with devices not included in the intranet, and in particular, that restricts the access to data stored within the intranet). Thus, the present invention allows a show or presentation to be controlled externally from the firewall, while at least the confidential data remains within the firewall and is presented to only those within the firewall under the direction of a leader that is potentially outside the firewall. Further, because the present invention employs a "client-request" technology, where each presentation member's browser requests information from a communications network server, typically data transmissions in response to such requests are not blocked by most firewalls.

Other features and benefits of the invention will become apparent from the detailed description and the accompanying figures herein.

BRIEF DESCRIPTION OF THE DRAWINGS

FIGS. **1**A and **1**B re a block diagram showing the functional components of the present invention such as the Internet;

FIGS. **2**A–**2**D present a flowchart of the steps performed (by the embodiment of FIGS. **1**A and **2**B) for presenting a multimedia presentation to a plurality of clients, each at a different client node.

FIG. **3** is an illustration of a presentation script for the present invention.

DETAILED DESCRIPTION OF THE PREFERRED EMBODIMENT

In FIG. **1**, a block diagram illustrating the components of the presentation system **50** of the present invention is provided, wherein solid arrows denote presentation data flows and dashed arrows denote control data flows. Note that the presentation system **50** utilizes the following high-level components:

(4.1) Client Sites **54**: Client sites **54**, where audience members receive a presentation. Typically, at least some of the client sites **54** are sufficiently geographically dispersed so that a face-to-face presentation is not possible. Additionally, note that each client site **54** has at least one of a client node **56** (e.g., a personal computer), and a telephone **62**, wherein the client node **56** may receive video (and possibly audio as well) information from a communications network **70** such as the Internet, and the phone **62** may be used for receiving an audio portion of the presentation routed separately through one or more voice grade telephony networks (collectively labeled **74**). Accordingly, if the client node **56** is resident at a client site **54**, then a network interface software package is required for receiving, e.g., video presentation information from the communications network **70** (e.g., including the Internet). For many networks (such as those including the Internet), this software package includes a network browser **78** such as the Internet browsers offered by Microsoft and Netscape, together with a client presentation software system **88** that coordinates with the browser **78** for requesting, receiving and displaying presentation segments (from the network **70**) as appropriate during the presentation.

(4.2) Leader Stations **92**: One or more presentation leader stations **92** that provide the leader(s) of a presentation with the ability to control the content of the presentation, the pace of the presentation, and any interactive communication with and between presentation audience members. Note that each leader station **92** includes the client presentation software **88** and a network browser **78** so that each leader can also view the presentation as it is perceived by audience members. Additionally, the leader station(s) **92** also have leader-specific presentation application software **94** for allowing a leader to control and direct a presentation.

Note that each leader station **92** is connected to components of the operations center **58** either through the communications network **70**, or directly using a **28**.**8** kilobits per second or ISDN **128** kilobit dial-up phone connection. The operations center **58** amplifies a presentation leader's scope of control using Internet Standard protocols (e.g., TCP/IP, FTP, etc.) to simultaneously transmit commands to a large group of clients. There may be one or more leader stations **92** per presentation performance. The leader tasks can be divided among a plurality of leader stations **92** to create, e.g., moderator, presenter, and show-control leader stations. These leader stations **92** may be co-located or geographically dispersed.

(4.3) Operations Center **58**: An operations center **58** for coordinating, at least at a high level, presentation start-up and presentation communication under the direction of a presentation leader at a leader station **92**.

(4.4) Content Webservers **96**: One or more content network server sites **96** (also denoted content webservers **96***a*, and alternate content webservers **96***b*) for providing presentation data to client sites **54** requesting such data via client nodes **56**. Note that for the client sites **54** illustrated, the content webservers **96***a* represent the presentation information suppliers of first choice. However, if difficulties (or expected difficulties) are encountered at one of the client sites **54** regarding receiving presentation segments prior to their time for display, then the client presentation software **88** at the client site is capable of requesting, via the browser **78** at the client site, presentation segments from an alternate content webserver **96***b* prior to or during the presentation.

(4.5) Phone Bridge **100**: One or more phone bridges **100** for supporting voice communication during a presentation is provided. The phone bridges **100** route the audio portion of a presentation to certain client sites **54**, thereby providing communications between the leader(s) and the audience members, and also providing communication between the audience members themselves.

Each phone bridge **100** receives its commands via a direct dial up phone connection from a phone bridge control **240** (discussed hereinbelow). The present invention may utilize a variety of phone bridges **100** to deliver audio and collect responses (e.g., voting by audience members on presentation presented issues). Note that each phone bridge **100** is enabled either directly through an application program interface (API), or by simulating a remote operator for the phone bridge. Some embodiments of the present invention utilize the following features provided by the phone bridges: an interactive mode, an audio only mode, call-back mode, and sub-conferencing (virtual conference table) mode, wherein these terms may be defined respectively, as: the leader and audience members are able to speak simultaneously to all presentation participants (interactive mode), the leader speaks to all audience members while all audience member phones have muted microphones (audio only mode), the phone bridge calls audience members (using a phone number

provided via presentation registration and/or a connection with the client presentation software **88** at the client's client node) for connecting for the audio portion of the presentation (via, e.g., the public switched telephone network) (call-back mode), subgroups of the audience and/or leaders are in the interactive mode with each other while in audio mode for the presentation performance (virtual conference table).

In cases where the presentation audience is mixed, with some members participating via teleconferencing or video conferencing and others viewing the presentation, voting for those who do not have an interactive network **70** connection can be accomplished with phone **62** pulse responses to one of the phone bridges **100**. In particular, these votes can be transferred to the operations center **58**, and (as with any audience member responses) optionally transferred to the profile database **120** described hereinbelow. Note that at the leader's discretion, a phone bridge **100** can be used to implement a help desk, wherein audience members requesting help before or during a presentation can be connected with a help desk operator for technical or customer support. The phone bridges **100** can also be used by the leader to implement subconference chat groups for localized question and answer sessions following a presentation performance.

(4.6) Content Manager **104**: A content manager system **104** for managing presentation scripts and data. The content manager **104** logs and confirms the locations and addresses of content webservers **96** where the content for each presentation will reside. The content manager **104** distributes presentation data, such as scripting information for a presentation, thereby providing:

(a) initial groupings of audience members according to, e.g., natural language preferred, organizational affiliation, geographical location, and/or intervening network connections and devices (e.g., firewalls and other security features, local area network connections), and/or

(b) sequencing of presentation segments to the operations center **58** (and more particularly, the host(s) **200** described hereinbelow).

Additionally, the content manager **104** distributes presentation content (e.g., presentation segments) to the content webservers **96** and verifies that the content is capable of being presented to audience members immediately before a presentation time. Note that the verification process makes sure that all the links in the presentation or show can be resolved appropriately. Finally, at the end of a presentation performance, the content manager **104** may remove the presentation content from one or more of the content webservers **96**.

Further note that the content manager **104** includes a reservation system **108** for maintaining a schedule for presentation and for reserving resources of the operations center **58**, and any presentation leader support such as leader stations **92**. The content manager **104** also includes an invitation subsystem **112** that is capable of maintaining invitation lists of candidate audience members, together with corresponding addresses (e.g., e-mail addresses) for various presentation performances. Additionally, the invitation subsystem **112** is capable of accessing client profile information for past audience members residing in the profile database **120**. Accordingly, by comparing client profile information in the profile database **120** with the information in various invitation lists, and/or presentation descriptions (e.g., keywords, etc.), prospective audience members for a particular presentation can be notified of future similar presentations via, e.g., e-mail.

Additionally, the content manager **104** is also responsible for accessing and maintaining a show content archival database **126**. Thus, following a live presentation performance using the present invention, the content manager **104** is capable of downloading the presentation content from the various content webservers **96** as well as presentation information retained in the operations center **58** into the show content archival database **126** for storage and/or possible replay. Note that the audio portion of a presentation is stored as a single continuous recording made by one of the phone bridges **100** during the presentation. Further note that the presentations stored in the show content archival database **126** are capable of being transmitted to various network **70** sites for subsequently time-delay delivery if desired.

(4.7) Software Download and Client Support System **130**: The present invention includes a software download and client support system **130** for providing presentation enabling software (e.g. client presentation software **88**) to both client sites **54** and leader stations **92**. Additionally, the software download and client support system **130** supplies presentation software to the leader stations **92** that allows leaders to control and direct their presentation performances. Finally, the system **130** provides client support via, e.g., the telephony network **74**.

(4.8) Pre-show Control System **136**: A pre-show control system **136** for providing audience members and potential audience members with presentation related information both for registering for presentation performances and for establishing initial network (**70** and/or **74**) connections immediately prior to a presentation performance, so that presentation content can be provided to each audience member's client site **54**. Thus, the pre-show control **136** provides audience members and prospective audience members with presentation booking information such as presentation topics, presentation performance dates, times, identification of leaders and/or lists of participants. Further, the pre-show control **136** also provides presentation content and script information to the operations center **58**. Within the pre-show control subsystem **136**, there is a registration module **140** and an associated network interface (not shown.), wherein audience members confirm their registration for a presentation performance, via, for example, network **70**. Note that confirmation of presentation performance registration includes, if necessary, a download of presentation specific software that provides a client with an icon on the client's client node **56** as a reminder of the scheduled presentation performance date and time for which the client has registered. Further, if the presentation for which the client has registered requires one or more software audio or video software systems, then the downloaded application software checks for these systems on the client's client node **56** and subsequently advises the client if one or more of the software systems required must be downloaded prior to the presentation performance.

Further note that the presentation application software downloaded to a client node **56** from the registration module **140** may be used for: configuring the client node **56** appropriately for the subsequent presentation performance, running tests at the client node for assuring that the presentation will be presented properly, allowing the client node to pre-load certain content

portions of a presentation, and/or providing the client with access to the lobby system **144** (discussed hereinbelow) for establishing initial network (**70** and/or **74**) connection(s) immediately prior to a presentation performance.

Note that the software application downloaded from the registration module **140**, in one embodiment, also allows a client to preview highlighted web pages of the upcoming presentation. Moreover, this software may allow the client to reconfigure and re-test his/her client node **56** for determining whether a desired configuration has been provided for a presentation performance.

Regarding the lobby system **144** also contained in the pre-show control **136**, the lobby system provides the initial connection point(s) for the audience members immediately prior to a presentation performance for which the audience members have registered. Accordingly, once network **70** and/or **74** connections have been established, the lobby system **144** connections are transferred to the operations centers **58** at commencement of the presentation performance.

(4.9) Accounting System **150**: In one embodiment, an accounting system **150** is provided for the present invention for managing its financial operations. In particular, the accounting system **150** includes a billing system **154** for maintaining a chart of accounts for both billing clients (and/or their affiliated organizations) having received a presentation, and billing presentation leaders (and/or their affiliated organizations) requesting the services of the present invention for distributing performances of their presentations.

Additionally, the accounting system **150** also includes a reporting subsystem **158** that outputs reports related to presentation performances, to clients and presentation leaders.

Referring now to the operations center **58**, a high level internal structure of this component will now be described. This component includes one or more host modules **200** for coordinating: (a) the dissemination and timing of presentation content under the direction of a presentation leader(s), (b) the interactions between the leader(s) and the audience members as well as between members of the audience themselves, (c) the gathering of feedback information from audience members according to, for example, answers to questions posed to the audience members during a presentation performance, and (d) providing results from audience participatory responses to the leader(s) and/or audience members. Accordingly, note that in one embodiment of the present invention, the computer on which a host **200** is resident has the following features: **64** megabytes of RAM, **166** MHz Pentium processor, NT operating system, Ethernet network card, in a configurable CUBIX backplane available through CUBIX, Inc., 2800 Lockheed Way, Carson City, Nev.

Each such host **200** is capable of managing one hundred or more interactions with clients and/or subordinate hosts **210** wherein the subordinate hosts are distributed on the network **70** to thereby increase an operation center host's span of control by **100** or more clients and/or further subordinate hosts per subordinate host to create an unlimited audience. Note that each host **200** receives presentation script information from the content manager **104** in preparation for initiating the performance of a presentation Further, each host **200** receives from the lobby system **144** audience member identifications for each presentation performance controlled by the host immediately prior to the performance of the presentation. Note that each such audience member identification typically includes: (a) a unique six digit client identifier which is encoded into the client presentation software **88** for each presentation performance client, and (b) a three digit group identifier for assigning one or more webservers **96** to provide presentation content. Note that the software download and client support system **130** encodes these two identifiers into the client presentation software **88** prior to distribution to client nodes **56**.

The host **200** also receives content webserver **96** identifications, and presentation script identifications from a show scheduler **204**. This scheduler **204** provides the functionality of the present invention for scheduling presentation performance times and the resources needed for performing each presentation. Thus, the show scheduler **204** provides the pre-show control **136** with scheduled show times and dates, and, as mentioned above, provides a host **200** responsible for a presentation with content webserver **96** identifications and presentation script identifications immediately prior to the performance of the corresponding presentation. Note that in the embodiment of FIG. **1**, the show scheduler **204** may be utilized to reserve resources at various content website servers **96** as well as phone bridges **100** in addition to other resources of the operations center **58**. Note also that the show scheduler **204** provides show schedule data to a security system **208**, this latter system described hereinbelow. However, in other embodiments of the show scheduler **204**, resources may be allocated for a presentation according to the number and geographical locations of clients desiring to participate in a particular presentation.

For each presentation performance, the presentation controlling host **200** also receives, from a presentation performance specific resource file or data base **212**: (a) content webserver **96** network addresses (e.g., for the Internet, these addresses being URLs) identifying the network **70** sites having presentation content data; (b) audience member lists of clients that have registered for the presentation performance and can therefore become audience members, if they choose to; (c) groupings of registered clients; and (d) script names and locations from which to retrieve the presentation script from the content manager **104**. Accordingly, note that the records of the corresponding resource file **212** associate presentation identifiers with content webserver **96** URLs and path names on these webservers where presentation content data resides. Thus, since the presentation scripts received by the hosts **200** from the content manager **104** are generic in that the scripts have variables or placeholders for content webserver **96** identities, each host **200** uses information from the corresponding resource file **212** (retrieved according to presentation identification) for resolving the undefined content webserver variables of the generic scripts, and thereby instantiating presentation scripts and presentation data with specific content webserver **96** references. Note that the resource file **212** may be created from information in a scheduling data base (not shown) populated with, e.g., content webserver **96** groupings (each grouping for supplying presentation content to a particular group of audience members) and audience member group identifications. The grouping of the webservers and the audience member groupings are both indicated by the three digit group identifier also encoded into each copy of the client presentation software **88** distributed by the software download and client support system **130** as previously discussed.

Each host **200** also sends commands to an audio system **220** for controlling presentation audio content that has been previously recorded for performance of the presentation to which the audio content is associated. In particular, a host **200** controlling a particular presentation sends audio pre-

sentation coordinating commands that direct and control the audio system **220**. The audio client **224** provides the following functionality in response to host commands. The audio client **224** may (a) utilize a plurality of specialized audio players **236** depending on the audio compression of the audio portion of a presentation to be provided to the client sites **54** via the phone bridge **100**, and/or via the network **70** in an alternative embodiment, (b) establish a connection to the audio server **228** at a specified network **70** location (note that in one embodiment the audio server may be accessible as an addressable node on the network **70**), and (c) start, pause, resume, position within, and stop an audio playback with an identified audio file or stream. Note that in performing the functionality described above, the audio client **224** may receive the following types of commands from a host **200**: a network **70** node address (URL) containing the location and the name of an audio file or stream, and the current state wherein the possible states are: playing at a particular position, paused, or stopped.

The audio client **224** controls at least two other modules of the audio system **220**, in particular, the audio server **228** and the audio player **236**. For a presentation to be performed, the audio server **228** is preloaded with audio presentation data by the content manager **104** prior to the performance of the presentation. The audio server **228**, in turn, supplies the audio portion of selected presentation segments to the audio player **236** as directed by the audio client **224**. Accordingly, the audio player **236** prepares the audio information for output to one or more of the phone bridges **100**. More particularly, the audio player **236** performs the following functions: (a) receives audio IP from the audio server **228**, (b) buffers IP packets received from the audio server, (c) decodes compressed audio data from IP audio packet, (d) controls an audio device (computer card) to create analog, line level, or direct public switched telephone network (PSTN) output audio signals. Thus, at the request of the audio client **224**, the audio player **236** outputs audio segment information to an audio client **224** designated phone bridge (s) **100** for subsequent transmission to identified client sites **54**, thereby providing presentation audio to clients in real time during a presentation performance. Thus, the hosts **200** and the audio system **220** coordinate so that the pre-recorded audio portions of each presentation are delivered to the phone bridge(s) **100** and distributed to the client sites **54** in a coordinated manner with corresponding video and/or graphic presentation segments.

It is important to note that several variations of presentation content can be provided to clients based on the available bandwidth on network **70**, as well as adjunct networks of various kinds that coordinate with network **70** for transmitting presentation information to client sites **54**; e.g., such adjunct networks may be local area networks, virtual private networks, and corporate intranets. Further, note that the audio client **224** can direct the audio server **228** and the audio player **234** to supply corresponding pre-recorded audio versions of presentation segments in different languages. Accordingly, the audio player may simultaneously output to one or more of the phone bridges **100** a plurality of different audio versions of pre-recorded materials for a presentation that are in different languages.

Each host **200** also directs the operation of the one or more phone bridges **100** via a phone bridge control module **240**. The phone bridge control module **240** provides an interfacing control system between the host **200** and the phone bridges **100** so that details of particular phone bridge **100** control commands and details of operations of phone bridges **100** need not be embedded in host **200** system software. Accordingly, under the direction of commands from the host **200**, the phone bridge control module **240** is capable of directing one or more phone bridges **100** to provide the following types of audio transmissions during a presentation:

(5.1) Direct phone bridge(s) **100** to route various audio presentation portions to particular client site phones **62** as well as leader stations **92**;

(5.2) Establish appropriate telephony connections so that an audience member can address all presentation participants;

(5.3) Establish one or more audio subgroups from the collection of audience members of a presentation. In particular, for some types of presentations wherein periodic conferring among subgroups is deemed advantageous, such audio subgroups can be considered as a vehicle for providing subconferencing capabilities;

(5.4) Assuming that subconference groups of audience members are capable of being provided by the phone bridge(s) **100**, the phone bridge control **240** is able, if directed, to configure the phone bridge(s) for allowing a subconference group to address all audience members and subsequently return to conferring privately among the audience members of the subconference;

(5.5) Instruct the phone bridge(s) **100** to monitor telephone lines of audience members for input regarding answers to questions posed to audience members and whose responses are provided via the pressing of digits on phones **62** at client sites **54**;

(5.6) Enable full interactive audio to all audience members where each audience member is capable of speaking to other presentation performance participants.

(5.7) Place a single audience member or the entire audience into audio (listen only) mode without deactivating the audio presentation performance from the audio system **220**.

Each host **200** is also in communication with the security subsystem **208** referred to hereinabove. Note that all external communications from third parties to a host **200** is routed through the security subsystem **208**. This subsystem provides various kinds of communication security measures such as:

(6.1) A data packet filtering router (not shown) for filtering out network **70** communications from unknown network **70** sources;

(6.2) A communications protocol and port-specific firewall (not shown) for rejecting certain communications addressed to specific ports unless the communications are provided in a particular protocol such as HTTP, HTTPS, or FTP;

(6.3) An encryption tunnel (not shown) for encrypting communications to be transmitted on the network **70** (via the internal webservers **248** that interface with the network **70**), and for decrypting communications received from the network **70** (via the internal network servers);

(6.4) A validation subsystem (not shown) for validating participants requesting access to operations center **58** resources. Validations performed here includes validating presentation performance identifiers provided by client site **54** network **70** addresses, passwords provided by clients, and client presentation software **88** embedded identifiers; and

(6.5) Virus detection software.

Note that the security subsystem **208** resides on a separate computational device from that of the host **200**. Further, note that the security subsystem **208** may translate network **70** received communications into a proprietary protocol before

sending such communications to other components of the operations center **58**. Moreover, for network **70** communications intended for different operations center processes and/or related to different presentation performances, different levels of security may be implemented. Thus, network **70** communications for one presentation performance might include only minimal protection such as virus protection and protocol translation prior to transmitting communications to, e.g., the host(s) **200**, or to the internal webserver(s) **248**. Alternatively, at an opposite extreme, wherein high security is desired for a presentation, all of the features (6.1) through (6.5) may be performed for communications received form the network **70**, and at least encryption is performed for communications transmitted across network **70** to, e.g., client sites **54**.

The present invention also provides and/or facilitates further security features. For example, for corporations that want to guarantee the security of their data during network presentations, the distributed server architecture of the present invention allows for content webservers **96** to be placed within a secure corporate intranet **260**. More particularly, such content webservers **96** may be behind a firewall **264**, such that the firewall is between such content webservers and the presentation controlling host(s) **200**. Thus, proprietary corporate data may reside behind the firewall **264** while presentation control may be performed externally.

Additionally, data access security can vary according to the needs of the presentation participants and/or their affiliated organizations. Thus, at one extreme, there is substantially no data security for the presentation data. Accordingly, the data may be available to anyone who knows a content webserver's network **70** address. This security level is similar to publishing data by creating World Wide Web pages on web sites and, in fact, presentations performed using the present invention can use actual World Wide Web websites as a source for presentation data.

A simple physical security capability may be used by the present invention for protecting presentation data by controlling the time span for which the data is accessible to clients. This involves keeping the data inaccessible when a presentation is not being performed. For example, presentation data may be maintained on private content webservers **96** or in private directories until near show time, making such data available at show time, and removing the data after the presentation performance terminates. Various aspects of this time based data management capability are directed by the show scheduler **204** for the operations center **58** and the content manager **104**. In particular, the show scheduler **204** may keep presentation data residing within the operations center **58** inaccessible to other components of the operations center as well as to the pre-show control **136**. Additionally, the content manager **104** may prohibit access to presentation data on content webservers **96** by providing the data on the webservers substantially only during the presentation, and/or changing accessibility permissions on presentation data previously provided on the webservers so that it is substantially only available during a presentation performance.

For an intermediate level of physical security, presentation data can be located on operations center content webservers **96** (either internal to the operations center or external thereto) that require passwords, do not allow overwriting of data, and are not used for unsecured data. For high security, the intermediate security measures may be enhanced by recording each client's identity and/or network **70** address as they connect to a host **200**. Furthermore, the high security measures may only allow network **70** connections from pre-approved network addresses using a specified protocol and port number for the duration of a particular presentation for which the client is registered.

In addition to any physical security methods as discussed hereinabove, presentation data can be encrypted prior to network transfers in any manner which the clients' browsers **78** can (with plug-ins) decrypt. Assuming the network **70** is the Internet, the operations center servers **248** support common gateway interface (CGI) and Internet information server (IIS) extensions for processing URLs and a presentation can implement standard web data security by using Internet protocols such as file transfer protocol (FTP) with user identification plus password, and hypertext transport protocol secure (HTTP). Also note that the security measures for the present invention are not restricted to providing communications on generally used port numbers (e.g., communication between the host and leaders or audience members can occur on either port **60** or port **80** in any combination for a single presentation performance. Note that special security presentation performances can be run using any port number desired when using servers **248** in the operations center, or on intranets (e.g., the secure corporate intranet **260**). For dynamic data generated during a presentation (e.g., data collected from audience member responses), the HTTPS protocol is useful, even in an otherwise unsecured presentation, for transmitting questions, collecting response, and returning results through a secure sockets protocol. In particular, the HTTPS protocol provides an encryption method generally accepted as secure enough for transmission of sensitive financial data over public networks. Accordingly, this provides security for collected client information because the response data is transferred to a host **200** in an encrypted format. Furthermore, the presentation performance controlling host **200** protects the received data by not sharing it, and the host **200** does not support standard network **70** (Internet) data access protocols.

Additionally, note that the presentation controlling host **200** is secured separately from the presentation data security. In particular, each host **200** executes on a server within the operations center **58**, wherein the host will only accept a network **70** connection from a client node **56** having the appropriate version and/or identification for a presentation being controlled by the host. Moreover, the client and/or the client's presentation software **88** must be able to access the host **200** through its network **70** address and present the correct presentation identification at the time of the presentation performance.

Since the show scheduler **204** selects the host **200** from a plurality of such hosts and also selects the time window for each presentation performance, several other security measures may be implemented for a presentation performance including: restricted access to the client presentation software **88**, uniqueness of each presentation performance identification, encoding of the network **70** (Internet) address of the host for the presentation and scheduling the date and time of the presentation. Note that the show registration system **140** facilitates these security measures in the show scheduler **204** by providing encoded presentation invitation network addresses (URLs) to clients and/or their client nodes **56**. Further, addresses of clients for a particular presentation may be sent to each of the content servers **96** having data for the presentation. Thus, when such a content server **96** receives a presentation data request from a client node **56**, the client's address, the presentation identification, and the presentation performance schedule time may be validated at each content webserver **96** accessed.

The degree of security placed on presentation performance invitation distribution and the verification of invited presentation participants by each content webserver **96** is selected by a sponsor of the presentation. Note that the invitation system **112** does not have a direct data connection to the show scheduler **204**. Thus, accidental release of sufficient presentation performance information to allow unauthorized access to a presentation performance is unlikely.

Additionally, to provide for dual path information security (e.g., to and from the operations center **58**), the presentation software **88** can also require a password for activation, wherein the password is unique to the client and/or unique to a particular configuration of the client's client node **56** and wherein the password may be manually entered immediately prior to a presentation connection to a host **200**. Note that for presentations using data secured within a secure corporate intranet **260**, the client host connections can transmit encrypted network **70** addresses.

Since each host **200** does not have access to presentation resources (e.g., invited client lists, content webserver **96** addresses, presentation thumbnail images, sign-on passwords, phone bridge **100** type and presentation scripts) until the show scheduler **204** sends them to the host **200** with the presentation startup commands, or a leader for the presentation adds resources to an active presentation performance, it is remote that sensitive and/or proprietary presentation data can be accessed through a host **200**. Moreover, a sponsor can create and perform a presentation without the presentation content data ever residing at the operations center **58**. Further, in cases where interactive response data received during a presentation performance is considered extremely sensitive, the sponsor may process the client responses at sponsor controlled network sites and subsequently, if desired, forward statistical summaries to the presentation controlling host **200** for any desired distribution to audience members.

Regarding security and presentation leaders, the leader(s) of a presentation can be verified by use of one or more passwords in addition to the host **200** address, port number, presentation identification, and presentation performance time for his/her presentation performance. Note that such leader passwords may be unique to each presentation performance and may be supplied to the presentation controlling host **200** by the show scheduler **204** immediately prior to the start of a presentation performance for thereby validating presentation leader(s). Additional leader information may be also provided to enable multiple leaders for a single presentation performance and to also enable different presentation control functions to be allocated among leaders according to their presentation passwords.

The leader software **94** may be distributed to presentation leaders and/or leader stations **44** by diskette or by a network **70** download. This software may be generated with built-in addresses and presentation identification numbers as well as particular ports for connecting to the presentation controlling host **200**. Note that since presentation leaders have access to various resource usage, supply and change capabilities, additional security measures may be applied to leaders and the leader software **94**. In particular, for leaders connecting through the network **70** (Internet), an encryption tunnel (not shown) can be established on the leader host connection, wherein such an encryption tunnel provides encapsulation of a proprietary high security protocol within the IP protocol. Further, to provide secure, high reliability connections directly to a leader, the operations center **58** maintains several dial-in lines which may be used at 28.8 kilobits per second or ISDN rates (e.g., of up to 128 kilobits per second). Note that connections on such dial-in lines are also usable by presentation audience members at the leader's discretion if their client identifiers are available to the operations center **58** from the content manager **104** after the leader connection is accepted.

If the above described security features are utilized by the present invention, then it is able to deliver a presentation performance with any mixture of security levels between the two extremes of: (a) no security processing of transmitted audience member responses, show data content, or presentation data locations, and (b) full security processing with only invited audience members, securing all audience member responses, storing and protecting the presentation data content, and securing the connection between each leader or audience member and the presentation controlling host **200**. Furthermore, the security of the operations center **58** may be audited using hacker prevention tests and virus detection and prevention methods as one skilled in the art will understand.

FIGS. **2A** through **2D** represent a flowchart of the high level steps performed by the network presentation system **50** the present invention. In particular, this flowchart illustrates the high level steps performed for both initiating and operating a presentation for audience members at clients sites **54**. Accordingly, in step **404**, prior to the scheduled time of a presentation performance, the show scheduler **204** supplies the host **200** assigned for controlling the presentation with an identifier that uniquely identifies the presentation performance and provides with this identifier one or more passwords that can be used by the host **200** and/or the security subsystem **208** for identifying the leader(s) and clients that attempt to connect with the host **200** as presentation participants. Note that such connections to the host **200** will typically be through the security subsystem **208** and therefore be subject to various security measures discussed hereinabove to which the presentation and its participants are subject. Subsequently, in step **408**, the host **200** uses the presentation performance identifier to request the one or more scripts for the presentation from the content manager **104**. Note that the presentation scripts provide: (a) identification of segments to be presented during the presentation, (b) sequencing information regarding the order of presentation of the segments, (c) alternative versions of various segments and/or collections of segments that may be by the leader(s) of the presentation. Note that further description of presentation scripts and their representations are provided hereinbelow. Also note that the presentation performance identifier is used by the content manager **104** for retrieving the presentation script(s) from the show content archive **126** for thereby returning the presentation script(s) to the host **200**. In step **412**, each leader for the presentation logs onto the host **200** by supplying appropriate validation information such as a password and presentation performance identifier. Further, if there is more than one leader, then additional leader identifying information may be required for differentiating the roles of various leaders for the presentation.

In step **416**, the pre-show control system **136** accepts network **70** and/or network **74** connections by candidate clients for the presentation performance. Note that it is assumed that the clients have previously registered for the presentation performance with the registration module **140** and therefore have been provided with validation information (e.g. a presentation performance identifier and/or password) for validating each client as an audience member for the presentation. Subsequently, in step **420**, a determination is made by the pre-show control system **136** as to

whether each candidate presentation audience member is connected to the pre-show control system by the communications network **70** or by the telephony network **74**. If it is determined that a candidate presentation client is connected by the communications network **70**, then step **424** is performed, wherein the candidate client logs onto the pre-show control **136** with a previously provided login. Note that this login may include a presentation performance identifier for the presentation and a password for identifying the candidate client as being registered for the presentation performance. Further note that in one embodiment, this step is performed by the lobby system **144**. Subsequently, in step **428**, a determination is made by the pre-show control system **136** (or the lobby system **144**) as to whether the entered login is valid. If the login is determined to be invalid, then step **432** is performed wherein the connection with the pre-show control system **136** is terminated. Note however, it is within the scope of the present invention that various retries can be provided as one skilled in the art will understand. Alternatively, if the candidate client's login is determined to be valid, then step **436** is performed wherein the pre-show control (determines whether the client's client node **56** is configured appropriately for the presentation performance). In particular, the pre-show control system **136** determines whether the client presentation software **88** is operable on the client's client node **56**. Further, the pre-show control system **136** may also determine whether the client's client node **56** has the appropriate network **70** addresses (e.g. URLs) of the content webservers **96** available for supplying presentation segments to the client node.

Subsequently, assuming the client's client node **56** is appropriately configured for the presentation performance, in step **440**, the pre-show control system **136** transfers the client's client identifier and network **70** address to the host **200**. Following this step, in step **444**, when the time for the presentation arrives, the client's client presentation software **88** via the network **70** establishes a network **70** connection between the client's client node **56** and the host **200** controlling the presentation performance. Note that such activating may be performed during the client's login session with the pre-show control system **136** if such occurs within a few minutes of the start of the presentation. After the host **200** is contacted, it instructs the client presentation software **88** to establish a connection with one of the internal webservers **248** for dynamic content.

Additionally note that the lobby system **144** substantially provides the functionality for the present step (step **444**). In particular, the lobby system **144** may maintain the login session connection until the time for commencement of the presentation performance. Moreover, the lobby system **144** may provide the client with excerpts of other presentations as well as advertisements and/or other informative material.

Following the activation of a connection between the client node **56** and a presentation controlling host **200**, in step **448** the client presentation software **88** is instructed by the presentation controlling host **200** (hereinafter for simplicity referred to as the "host **200**") to retrieve and cache, via network **70**, one or more initial presentation segments from identified content webservers **96** where the presentation segments have been pre-stored. Note that the initial presentation segments (as well as subsequent presentation segments) may be different for clients at different client sites **54**. In particular, the segments provided may depend on network **70** transmission rates, client natural language preferences, unique organizational displays and/or data (corporate logos and/or confidential financial data), and configurations of client nodes **56** (e.g. the software and/or hardware).

Returning now to decision step **420**, if this step determines that the client's connection is via the telephony network **74**, then in step **450**, the pre-show control system **136** requests that the client enter an acoustic login via digits on the telephone **62** at the client's client site **54**. Note that clients that login through telephony network **74** may intend to participate in only the audio portion of a presentation performance. However, clients who login in this manner can subsequently log in to the pre-show control system **136** via a network **70** connection and obtain a multimedia performance of the presentation.

In step **452**, the pre-show control system **136** determines if the acoustic login is valid. If not, then in step **456** the call is terminated. Alternatively, if the login is deemed valid, then the pre-shown control system **136** determines the level of presentation to which the client has been assigned. In particular, the client may be assigned to an audio presentation or alternatively to a multimedia performance of the presentation. Thus, if the client has been assigned to obtain a multimedia presentation via the network **70**, then in step **464** the pre-show control system **136** automatically performs any necessary pre-show housekeeping tasks for thereby allowing a more expedient network **70** login by the client for obtaining the multimedia performance of the presentation. Note that in particular, any financial transactions prior to the presentation such as credit card number transfers and/or a change of the location of the client's site **54** may also be performed during the present step. Moreover, it is also an aspect of the present invention that speech recognition modules can be used for interpreting client input. Further, note that the tasks performed in step **464** may also be performed by registration module **140** during registration for the presentation, such registration potentially occurring substantially prior to the performance of the presentation. Additionally, regardless of the flow of control path taken from step **460**, step **468** is encountered wherein at the time to commence the presentation performance, the pre-show control system **136** requests that the host **200** transfer control of the client's telephony call so that it is controlled by the control bridge controller **240** for receiving the audio portion of the presentation performance. Subsequently, regardless of whether the client is to receive the presentation performance via network **70** and/or network **74**, step **472** is performed wherein the host **200**: (a) activates the leader software **94** on the leader station(s) **92** used in controlling the presentation performance; and (b) activates the client presentation software **88** at the leader station(s) **92** for viewing the presentation performance as an audience member will.

Subsequently, steps **474** and **476** are performed concurrently wherein each client having a client node **56** has its client presentation software **88** in a wait state waiting for a presentation command(s) from the host **200** via the network **70**, while in step **476**, the leader(s) for the presentation performance determines the first collection of corresponding presentation segments and transmits the identity of the selected collection to the host **200**. Note that there can be more than one version of the presentation from which the leader can select segments for presenting to the audience members. Further, note that of the versions being selected, the present invention may automatically select subversions to be provided to various audience members depending upon, e.g., data rate transmissions by the network **70** from content webservers **96**. However, it is also an aspect of the present invention that the leader(s) may override the automatic selection of subversions of a presentation performance and/or mandate that a particular subversion be provided to various audience members. In particular, this can be accom-

plished by: providing only one rendition of source material such as a high resolution corporate logo and leaving all alternate resource fields of the script blank and providing only one "level" of scripted resources for that presentation collection, as will be discussed in further detail hereinbelow with reference to FIG. **3**.

In step **480**, if the leader station **92** providing the identity of the presentation segments is external to the operations center **58**, then the security subsystem **208** checks the leader input for validity via, e.g., determining the network **70** address from which the identity of the selected presentation segments have been transmitted. Assuming that the transmission from the leader station **92** is deemed valid, in step **490**, a determination is made as to whether the leader(s) has determined a next collection of one or more segments whose identities have been supplied to the host **200**. In particular, the leader(s) may choose to identify such segments to the host **200**, or indicate that the performance of the presentation to be terminated. Accordingly, if no other segments are determined and/or the leader(s) indicated presentation performance termination, then step **494** is performed wherein the presentation software **88** is removed from client nodes **56**.

Alternatively, if an additional collection of segments is determined, then in step **500**, the host **200** accesses the presentation script(s) with the leader supplied identifications for the segment collection, thereby obtaining additional data items regarding the segments of the collection as will be further described hereinbelow.

Subsequently, in step **504**, the host **200** accesses the resource file **212** for resolving virtual webserver names in the accessed segment collection for thereby providing actual content webserver network **70** addresses having at least the video versions of the presentation. Additionally, note that it is within the scope of the present invention that resource file **212** can also be accessed for resolving identifiers and thereby identifying a corresponding audio portion to be presented to audience members via the audio system **220** and the phone bridge(s) **100**.

Following step **504**, in step **508**, the host **200** sends one or more commands to each copy of the client presentation software **88** indicating both the next collection of segments to be retrieved by the client nodes and the network **70** addresses of the primary and alternate webservers **96** from which to retrieve the segment collection.

It is important to note that the host may send substantially simultaneously a different set of commands to different client sites **56** depending on the characteristics desired for the presentation at each client site.

Since processing according to the present invention occurs at a presentation host controller **200** and simultaneously at client nodes **56**, during the processing steps **476** through **508** performed remotely from the client nodes **56**, the client nodes as per step **474**, may be prepared for accepting the next presentation commands transmitted by the host **200** in step **508**. However, such host nodes **56** may be also concurrently providing various portions of the presentation performance to their respective audience members. In any event, when step **516** is encountered, the client nodes **56** have received the next host **200** transmitted commands and therefore the client nodes now enter a processing state whereby these nodes attempt to assure a timely caching of this next collection of segments for timely performance of their portion of the presentation.

In step **516**, a determination is made by the client presentation software **88** at each client node **56** upon which the software is loaded, as to whether the next collection of segments indicated by the one or more commands transmitted by the presentation controlling host are presently cached on the client's client node **56**. Note that this next collection of segments could have been previously cached at a client node **56** due to: directory cache commands for caching an entire file directory that was issued earlier in the presentation performance, provided by fixed media such as CD-ROM at the client nodes(s) **56**, or re-use of presentation segments such as HTML page formats, background images, or logos.

Accordingly, if the next collection of segments is not cached on a client node **56**, then step **524** is performed wherein the client presentation software **88** on the client node **56** uses its most recent network **70** data transmission characteristics together with the host **200** transmitted list of current network **70** addresses for content webservers **96** to select an appropriate content webserver and an appropriate version of the next collection of segments to be retrieved. Note that the selections determined in this step are performed with the goal of assuring that there is a high probability of this next collection of segments being delivered to the client node **56** prior to the time that this collection is to be used in the presentation performance on the client node. In particular, the following is a description of the steps performed in determining, from the network **70** data transmission characteristics, the content webserver **96** and the (sub) version of the next collection of segments to be retrieved. The selection of the webserver may be dependent upon the time allotted for the transfer and the network **70** transmission characteristics such as data transmission rate. The time for each network **70** transfer of a collection of segments (e.g., one or more presentation elements, each such element having one or more segments therein) is controlled by the host **200**. The host **200** designates time according to at least one of the following categories: (a) no time, wherein the presentation element(s) is to be displayed immediately, (b) indefinite, wherein the amount of time for transfer of the presentation element(s) is indefinite, and (c) a specific time interval indicated in a script command for the presentation, e.g., a "virtual time" command as indicated by commands (rows) of the script shown in FIG. **3** having values in the **620** column as will be discussed hereinbelow. Note that as the expected amount of time for retrieving one or more presentation elements lengthens, larger groups of presentation elements may be retrieved and/or better presentation quality presentation elements may be retrieved (e.g., the presentation quality may be enhanced from limited or no animation to full animation).

Additionally, the presentation element(s) selected is dependent upon network protocols such as HTTP and FTP. For example, as the size of the presentation data and the time for retrieval increases, the present invention tends to utilize FTP for network **70** transport. Alternatively, as the size of the presentation data and the time for retrieval decreases, the present invention tends to use HTTP.

Accordingly, in one embodiment of step **524**, the size of each candidate collection of one or more presentation elements is determined from the webservers **96** by, e.g., requesting such sizes. As an aside, note that an indication of the bandwidth available with each such webserver can be determined if not available otherwise. Thus, if there is a primary webserver **96***a* and an alternative webserver **96***b*, and each has presentation versions for both HTTP and FTP as well as both having animated and non-animated interchangeable presentation elements, then an expected time for retrieving each available combination is determined. Subsequently, the candidate collection selected provides first, the highest quality presentation, and second, the largest

amount of presentation data possible. Consequently, the expected times are used to select the webservers **96**, the collection of presentation elements, and the transfer protocol to use in providing the selected collection to the client node **56**.

In one embodiment, the following selection process is used to determine the expected times:

for each candidate collection of presentation elements:

(a) The size of the collection is determined.

(b) The size is divided by the bandwidth average for the last two minutes as measured from any network **70** transmission source. If the average bandwidth is not available, then a bandwidth from the most recent webserver is used.

(c) A protocol overhead factor is added to the result of (b) to account for the different overheads for each of the different protocols available on network **70** that may be used (e.g., FTP and HTTP).

(d) Select the highest quality collection of presentation elements available, and select the largest collection that can be transferred in the time available. Note that it is assumed that an indefinite time designation by the host **200** is viewed as time sufficient for any size of transfer.

It is worthwhile to note that in other embodiments of the present invention, additional network characteristics other than bandwidth may be used, as one skilled in the art will understand. In particular, such characteristics as network **70** error rates, fluctuations in bandwidth, or a predictive statistical expectation of bandwidth may be used. Additionally, note that such candidate collections of presentation elements can also be resident at the client node **56** since some portions of a presentation can be also distributed on CD-ROMs. Accordingly, step **524** of FIG. **2**C (as well as other steps in the flowchart of FIG. **2**) also may access a CD-ROM drive or other transportable storage media for various portions of a presentation. Also, it is noteworthy that if network **70** supports multicasting, then a plurality of client nodes **56** may have their presentation elements selected according to a single access rate (i.e., server data propagation to the network) and a single network transmission rate instead of performing individual presentation element selections.

Subsequently, in step **528**, the client node **56** provides the identity of the selected webserver and next collection of segments to the client node's browser **78** and the browser, in turn, sends a network **70** request to the selected web server for the selected (subversion) of segments. Following this step, the client presentation software **88** monitors the time elapsed before transmission of the selected collection of segments is completed, and determines whether these segments are provided within an appropriate window of time that allows them to be presented during the performance of the presentation. Thus, in step **532**, the client presentation software **88** determines whether the requested collection of segments is cached on the client node **56** within a desired time prior to the proposed performance of the collection of segments. In particular, for determining this desired time, a function dependent on one or more of: (a) various measurements related to one or more other client nodes **56** receiving the presentation performance, (b) a predetermined default length of time, as e.g., specified in the presentation script, and (c) a length of time determined by a leader of the presentation performance, e.g., during the performance. Regarding (a) above, note that measurements such as:

(7.1) network **70** transmission rates for each of one or more previous requests for presentation segments;

(7.2) for each of one or more previous requests for presentation segments, an elapsed length of time between the request time for the presentation segments and receipt of the segments;

(7.3) for each of one or more previous requests for presentation segments, a size (e.g., in bits) of the segments received from the request.

Note that there are various functions dependent on one or more of (a)–(c) immediately above that may be used as one skilled in the art will understand. Further note that such function may be as simple as a comparison of corresponding network **70** transmission rates between (a) the client node **56** and the webserver(s) with which it is communicating, and (b) other client nodes **56** and the webserver(s) with which they are communicating. Alternatively, such a comparison may be performed on the elapsed time as in (7.2). Note that there are at least two possible alternatives here:

(8.1) the present invention may attempt to retrieve the same collection of segments from an alternative content webserver;

(8.2) the present invention may attempt to retrieve an alternative collection of segments that can be used as a replacement for the initially requested segment collection from either the same webserver **96** for which the original request was directed, or from an alternative webserver **96**.

Accordingly, if the collection of segments is not cached within this time, then step **536** is performed wherein the client presentation software **88** determines if there is sufficient time to retry obtaining the collection of segments or another collection of alternative segments prior to the time of their estimated performance.

If in step **536** it is determined that there is insufficient time remaining, then step **474** is again activated, wherein the client node **56** (and more particularly, the client presentation software **88**) prepares for the next set of one or more presentation commands from the host **200**. Note, however, that even though the portion of the presentation corresponding to the collection of segments are not retrieved in time for performance, it is an aspect of the present invention that if the audio portion of the presentation is provided through the separate telephony network **74**, then there may be substantial continuity in the presentation regardless of whether a portion of the video for the presentation is displayed or not.

Alternatively, if in step **536** the client presentation software **88** determines that there is sufficient time for attempting a retry for obtaining the requested collection of segments, then step **524** is again performed, wherein the client presentation software **88** again evaluates the transmission characteristics of the network **70** for selecting a content webserver **96** and subversion of the collection of segments so that there is again a high probability of the newly selected collection of segments being delivered prior to the time that these segments are to be presented on the client node **56**. Accordingly, on such subsequent iterations for determining an alternative way to present a particular portion of the presentation, the following steps may be performed: The original calculation is again performed with new times and current bandwidth information usually resulting in selection of alternative segment collections that are smaller. An overall limit of three re-tries of any URL will force smaller alternative segment collections to be selected, or a message to the audience member stating that the network is not functional.

Returning now to step **532**, if in this decision step it is determined that the requested collection of segments has been timely cached at the client node **56**, then step **544** is performed wherein an evaluation of the network **70** transmission characteristics that occurred during the transmission of the collection of segments. In particular, the following characteristics are determined: average network data rate, the likely range of expected data rates (e.g. within a standard

deviation of the most likely data rate), measurements regarding network errors and/or quality of transmission, total elapsed time taken to complete the transmission of the collection of segments, and/or the size of the transmission.

Subsequently, in step **548**, a determination is made as to whether a host **200** interrupt is detected that requests a halt to the presentation of the current collection of segments. Note that this step is provided as an illustration of interrupt processing that can be performed by the client presentation software **88**. Note, however, that such interrupt processing may be performed between or during substantially any of the processing steps described herein that occurs on the client node **56**. Also note that such host **200** interrupts are likely to be initiated by a leader for the presentation when the leader determines that, e.g., there should be a deviation in the script for the presentation performance. Thus, regardless of where a host **200** interrupt step is performed within the processing steps for the client presentation software **88**, upon detecting this interrupt, the flow of control of the present flowchart returns to a point in the processing wherein the next steps performed are the steps **474** and **476** performed at: (a) the client nodes **56**, and (b) the leader's station(s) **92** and the presentation controlling host **200**.

Assuming that no host interrupt is detected in step **548**, then steps **552** through **560** are iteratively performed until all segments of the current collection of segments are presented to the client. Accordingly, when there are no further segments in the current collection, step **560** routes the flow of control back to the concurrent steps of **474** and **476** as discussed previously hereinabove.

Referring to FIG. **3**, an illustration of a simple script description **600** is shown. Each of the rows **608** after the first column heading row describes a presentation action to be performed during a performance. Each column entry of each row **608** provides information related to the script action to be performed by the row. Following is a description of the data capable of being contained in each column.

A Script Level column **612** for identifying alternative variations of the presentation. For example, a first variation might be directed to the customers of a corporation, another variation directed to the sales representatives of the corporation, and yet another directed to the investors of the corporation. Thus, a single script may be used for a plurality of related presentations that have at least some overlapping content. Accordingly, in column **612**, each digit within each row of the column identifies a presentation variation to which the row applies. Thus, row **608***a* is performed only in the variation of the presentation having a "1" in this column; e.g. rows: **608***a*, **608***d*, **608***e*, **608***g* through **608***o*. Similarly, a second variation of the presentation is performed using rows: **608***b*, **608***d*, **608***f*, through **608***o*. Additionally, a third version is provided by rows: **608***c*, **608***e*, **608***f* through **608***n*. Note, the "END" identifiers in **608***q* designates the end of the script.

An item number column **616** is provided for labeling rows so that a presentation leader can transfer to the rows having a value in this column and proceed sequentially through the script from the labeled row to which the leader transfers. This allows the leader to skip and/or rearrange portions of a presentation performance. Accordingly, there are three rows to which a leader can transfer control, namely, rows: **608***a*, **608***e*, and **608***o*.

A "virtual time" column **620** is provided wherein values in this column set and reset a presentation performance timer so that, for example, some portions of a presentation will automatically be skipped if a performance of the presentation is running behind a predetermined performance schedule. In script description **600**, there are four rows **608** where the presentation performance timer is reset, i.e. rows **608***a*, **608***e*, and **608***j*. Thus, for a presentation performance corresponding to script level **1**, in row **608***a*, the timer is set to 0.00 and the subsequent rows **608** for script level **1** are sequentially performed until **608***e* is encountered, wherein a determination is made as to whether the timer has a value greater than one minute and one second. If this is the case, then the sequential rows (for script level **1**) down to row **608***j* are interpreted by the presentation controlling host **200**, but no host commands are transmitted to either the client nodes **56**, or the phone bridge control **240**. Thus, it is as if the actions for these script rows are skipped. However, at row **608***j*, the timer is reset and each subsequent row **608** (of script level **1**) is performed.

An Action column **624** is provided for designating an action to be performed (if any) during execution of a row **608**. Thus, for row **608***a*, the host **200** instructs all client nodes **56** that a resource (e.g., a content file, or Web page) is available for downloading. Subsequently, for script level **1**, row **608***d* instructs the client nodes **56** to cause their browsers **78** to display the resource. A list of actions that can be designated in the action column **624** are as follows:

(9.1) client_Load—Instructs all client nodes **56** that a resource is available for downloading in background processing.

(9.2) client_Free—Instructs all client nodes **56** to delete a previously downloaded resource.

(9.3) client_Display—Instructs all client nodes **56** to cause their browsers **78** to display a resource. This command implements "Extended" parameters when the Resource Location column **636** has a corresponding entry of "TWFTP". The extended parameters are a second set of resource locations for retrieving the resource to which the corresponding action in the same row **608** is to be applied. For example, a second set of resource locations may be used by the client node **56** when it is determined that the FTP network **70** data transfer rate is unlikely to provide a particular presentation content file (e.g., of presentation elements) at a client node **56** in time for display.

(9.4) client_play—Instructs all client nodes **56** receiving presentation audio content via a network **70** to play a resource.

(9.5) leader_Hold—Causes the host **200** to suspend script interpretation until a next command is received from the leader designating a next row **608** to perform.

(9.6) time_Set_At—Forces a script's virtual time clock (i.e. timer) to a known value.

(9.7) time_Hold_To—Causes the host **200** to suspend script interpretation until a particular state is reached. For example, all clients report a display element command is complete; e.g., the display of a corporate logo.

(9.8) child_Script—Suspend this script, read and process another script in a manner analogous to a programming subroutine invocation.

(9.9) End_Start—Defines the last line (i.e. row **608**) of a script and resets execution to the first line.

(9.10) END—Defines the last interpreted row **608** of a script.

Regarding the "Resource Type" column **632** of script description **600**, the fields of this column provide an indication of the data types and/or organization of the presentation segment collections to which the action of the corresponding "Action" field of the same row applies. In particular, the following types (denoted also hereinafter as "resource types") are available

(10.1) FTP_File—A single file to be pre-cached or downloaded from a webserver(s) **96** to client nodes **56** in the

background using FTP or HTTP when FTP is blocked by security measures.

(10.2) FTP_Dir—An entire directory of files to be pre-cached or downloaded in the background using FTP or HTTP when FTP is blocked by security measures.

(10.3) HTML_File—A single HTML file containing presentation content.

(10.4) MC_Question—An HTML_File to which a client response to presented questions is requested.

(10.5) MC_Answer—An HTML_File to display the results of an MC_Question.

(10.6) Info_Form—An HTML_File to collect data for the profile database **120**.

(10.7) Audio_RaFile—An audio file prepared in advance of the presentation, may be downloaded to client nodes **56** via network **70**.

(10.8) Audio_RaLive—Live streaming of an audio file, via network **70**, requires dynamic real time buffering at the client nodes **56**.

(10.9) THIS LINE—Causes the host **200** to refer to the row **608** of the script having this value (i.e., "THIS LINE"). Thus, the action for the row having this value can be viewed as needing no presentation resources.

(10.10) Twscript—Another script resource used by the current script resource.

In the "Resource Location" column **636** of script description **600**, each row entry indicates a location of the presentation resource to which the action for the row is to be applied. Fields of this column may provide descriptions of a number of alternative locations for obtaining various versions and/or subversions of a presentation segment collection; i.e. alternative locations have a "|" separator therebetween. The types of values that can occur in this column are:

(11.1) SN—Denotes a webserver **96** Name, also may be a physical network **70** address or an Internet domain name, as one skilled in the art will appreciate.

(11.2) TWFTP—Denotes the directory on client nodes **56** created to hold the presentation resources (e.g., presentation segments) downloaded from the webserver **96**.

(11.3) CD—Denotes a CD-ROM drive attached to a client node **56**; note that during preparation for a presentation performance, client determines the drive letter corresponding to the CD-ROM drive at his/her client node **56**.

(11.4) LOCAL—Denotes anywhere on a client node **56**, except the CD-ROM drive or the location designated by TWFTP.

(11.5) END—Denotes a time when clients have used a named resource, e.g., all clients have downloaded and displayed the logo image file, as the name resource.

(11.6) GOT—Denotes a time when clients have accessed the named resource, such as a time after a corporate logo file has been downloaded to all clients.

(11.7) this—Denotes that no external resources such as files, webservers, etc. are required for the command having this value.

Note that in the locations designated in at least (9.1) above, variables or "placeholders" can be provided in a script so that a developer of a script need not have at his/her disposal all the particulars as to where presentation resources (e.g., segment collections) will be stored for access during performance of the presentation. For example, variables or placeholders for as yet unidentified content webservers **96** may be provided as part of a location for a collection of segments. For example, each grouping of clients from the candidate audience members registered for a presentation performance has the following placeholders in presentation scripts defined within a corresponding presentation resource file **212**: (a) the placeholder, "BBAMain" which is to be resolved as the network **70** identifier for the webserver **96** providing access to real time and/or smaller size presentation segment subcollections, (b) "BBA-Ftp" which is to be resolved as the network **70** identifier for a file (Internet) server holding large presentation files suitable for background download to client nodes **56**, (c) "BBA-Ra" which is to be resolved as the network **70** identifier for an audio (Internet) server, or another location that provides access to audio data for the audio player **236**, and (d) "BRA-QA" which is to be resolved as the network **70** identifier for the webserver **96** used for question and answer display sequences.

Regarding the "Resource Name" column **640** of script description **600**, the entries of this column provide an identification of a presentation resource (e.g. presentation data segment file) independently of the network **70** address or node upon which the resource resides. Thus, a complete specification of a location of the resource requires the corresponding resource location and the resource name entries from the same row of script description **600**. The following data types are available for fields of this column:

(12.1) Path—Denotes a path name to a file directory relative to the resource location. It is assumed that a nested or hierarchical file directory notation is used to identify the presentation resource residing at the location denoted by "Path".

(12.2) File—Denotes the name of a resource file.

(12.3) Encoder Task—Identifies a specific real time audio stream accessible from the webserver **96** identified in the corresponding Resource Location **636** column.

The foregoing discussion of the invention has been presented for purposes of illustration and description. Further, the description is not intended to limit the invention to the form disclosed herein. Consequently, variations and modifications commensurate with the above teachings, within the skill and knowledge of the relevant art, are within the scope of the present invention. The embodiments described hereinabove are further intended to explain the best mode presently known of practicing the invention and to enable others skilled in the art to utilize the invention as such, or in other embodiments, and with the various modifications required by their particular application or uses of the invention. It is intended that the appended claims be construed to include alternative embodiments to the extent permitted by the prior art.

What is claimed is:

1. A network presentation distribution system for presenting a presentation, comprising:

one or more presentation content supplying nodes of a communications network, said content supplying nodes for providing access, by a first user at a first client node of the communications network, to a collection of data segments of said presentation using said communications network, wherein said collection includes first and second subcollections of one or more of said segments;

a presentation controlling node for transmitting to at least said first client node, via the communications network, presentation control information used for identifying said first and second subcollections;

a computational component for determining network performance information of the communications network, wherein said computational component determines said network performance information using network data obtained from network transmissions detected at said first client node;

a first segment selector, activated after said first client node receives said presentation control information, for selecting, using said network performance information, one of said first and second subcollections for transmitting from one of said presentation content supplying nodes to said first client node; and

a presentation component at said first client node for presenting said selected one of said first and second subcollections to the first user.

2. A network presentation distribution system as claimed in claim **1**, for determining which of said first and second subcollections to transmit to said first client node, said computational component includes a network analyzer for determining said network performance information using one or more of the following types of said network data: (a) a data transmission rate of said communications network at said first client node; (b) a fluctuation in bandwidth of said communications network at said first client node; and (c) a statistical prediction of a bandwidth of said communications network at said first client node.

3. A network presentation distribution system as claimed in claim **1**, wherein said first segment selector is activated in response to said first client node receiving said presentation control information, and is activated without an intervening manual input from the first user for requesting one of said first and second subcollections.

4. A network presentation distribution system as claimed in claim **1**, wherein a bandwidth of presentation transmissions on the communications network to the first client node varies sufficiently to affect the presenting of the presentation, and the varying bandwidth is substantially uncontrollable from said first client node, and said presentation content supplying nodes.

5. A network presentation distribution system as claimed in claim **1**, wherein at least one of said first and second subcollections is accessible from first and second of said content supplying nodes via first and second routes;

wherein: (a) said first route includes said first content supplying node and not said second content supplying node; and (b) said second route includes said second content supplying node and not said first content supplying node.

6. A system as claimed in claim **1**, wherein (a) and (b) following:

(a) said first subcollection includes video with motion, and said second subcollection includes video with one of: (i) reduced motion, and (ii) no motion, and

(b) said first subcollection is presented to the first user at said first client node simultaneously with said second subcollection being presented to a second user at a second client node.

7. A network presentation distribution system as claimed in claim **1**, wherein -the communications network includes a portion of one of: the Internet, and a network using TCP/IP for communicating between at least one of:

(a) one of said content supplying nodes and said first client node;

(b) said presentation controlling node and said first client node;

(c) one of the content supplying nodes and said presentation controlling node.

8. A network presentation distribution system as claimed in claim **1**, wherein said first client node includes said first segment selector and a first presentation display component for displaying to the first user at said first client node, a first selection of one of said first and second subcollections, made by said first segment selector.

9. A network presentation distribution system as claimed in claim **1**, wherein said first subcollection includes a first video portion, and said second subcollection includes a different second video portion that corresponds in content with said first video portion, and wherein said first and second video portions have substantially different expected data transmission rates for being transmitted to said first client node, and wherein said first segment selector uses said different expected data transmission rates in selecting one of said first and second subcollections.

10. A network presentation distribution system as claimed in claim **1**, wherein an audio portion for said first subcollection is transmitted to said first client node separately from said first subcollection via a phone bridge.

11. A network presentation distribution system as claimed in claim **1**, wherein said first segment selector is resident on said first client node and a second segment selector, activated in response to a second client node receiving said presentation control information, is resident on said second client node, wherein said first and second segment selectors each select, without user selection input, one of said first and second subcollections for simultaneous presenting of a same corresponding portion of the presentation.

12. A network presentation distribution system as claimed in claim **1**, further including a network interface component, residing on said first client node, for receiving said presentation control information and transmitting a request for a subcollection of said collection of data segments to one of said content supplying nodes, wherein said network interface component includes a network browser for communicating with said communications network.

13. A network presentation distribution system as claimed in claim **1**, further including a content manager for distributing, via said communications network, at least a video portion of said first and second different subcollections of said presentation to said content supplying nodes prior to a commencement of a performance of said presentation, wherein during said performance of said presentation, said first subcollection is presented at said first client node when received from said first content supplying node, and said second subcollection is simultaneously presented at a second client node when received from said second content supplying node after said second client node receives said presentation controlling information.

14. A network presentation distribution system as claimed in claim **1**, wherein there are first and second versions of said presentation performed synchronously, respectively, at said first client node and a second client node receiving said presentation control information, wherein there is a correspondence in content between at least a majority of segments in said first version with segments of said second version, and wherein said first and second versions have their corresponding audio portions in different natural languages.

15. A network presentation distribution system as claimed in claim **1**, further including a leader node that is accessed by a leader for controlling a performance of said presentation, wherein the leader directs a pace and content of the presentation performance via said presentation controlling network node that synchronizes a performance of said presentation on said first client node with a performance of said presentation on a second client node so that a particular one or more of said segments are presented on said first client node synchronously with an alternative one or more segments output by one of said content supplying nodes to said second client node, wherein said alternative one or more segments correspond in content to said particular one or more segments.

16. A network presentation distribution system for presenting a presentation, comprising:

a first and second presentation content supplying nodes of a communications network, said first and second content supplying nodes for providing access to one or more collections of data segments of said presentation using said communications network;

a presentation controlling node for transmitting to at least a first client node, presentation control information used for identifying a first subcollection of said segments for presentation to a user at said first client node; and

a content node selector, activated after said first client node receives said presentation control information, said content node selector for selecting one of said first and second content supplying nodes for transmitting one of: (a) said first subcollection to said first client node using said communications network; and (b) an alternative subcollection of one or more of said segments predetermined as a replacement for said first subcollection for presenting at said first node;

wherein said first client node transmits a presentation request to a selected one of said first and second content supplying nodes, said presentation request including at least one of (a), (b) and (c) following: (a) an identification of a version of said presentation, said version for a predetermined group of presentation audience members, (b) an identification of one of said first and said alternative subcollections identified in a predetermined script for said presentation; and (c) information for identifying an alternative segment determined by a leader of a performance of said presentation, wherein said alternative segment is not identified in said script.

17. A network presentation distribution system as claimed in claim 16, wherein said content node selector changes from selecting said first content supplying node to selecting said second content supplying node according to a value dependent on a measurement related to a previous data transmission rate between said first client node and at least one of said first and second content supplying nodes, wherein said value is expected to be indicative of a current data transmission rate between said first client node, and at least one of said first and second content supplying nodes.

18. A network presentation distribution system for presenting a presentation, comprising:

one or more content supplying network nodes able to provide a plurality of segments to a first client node of a plurality of network client nodes, via a communications network, wherein each of said segments provides a portion of a particular presentation;

a presentation controlling network node for transmitting presentation control information providing identities of segments in a collection of said segments when the presentation is performed at said first client node;

a presentation network component at said first client node, wherein, after receiving said presentation control information, said presentation network component transmits segment selection information, obtained using said presentation control information, to a first of said content supplying nodes for obtaining the collection by said first client node;

a segment selector that uses one of: (a) the presentation control information, and (b) the segment selection information for identifying a first collection of said segments to transmit from the first content supplying node to the first client node;

wherein said presentation controlling network node synchronizes a performance of said presentation on said first client node with a performance of said presentation on a second client node so that a particular one or more of said segments are presented on said first client node synchronously with a presentation of an alternative one or more segments output by one of said content supplying nodes to said second client node, wherein said alternative one or more segments correspond in content to said particular one or more segments.

19. A network presentation distribution system as claimed in claim 18, wherein said segment selection information depends on a data transmission characteristic of a transmission to the first client node from one of the content supplying nodes;

wherein said data transmission characteristic is dependent on one of a network data transmission rate and a measurement of network data transmission errors; and

wherein said data transmission characteristic is expected to be indicative of a current transmission rate to the first client node from the one content supplying node.

20. The network presentation distribution system as claimed in claim 18, wherein a performance of said particular one or more segments on said first client node includes video with motion, and a performance of said alternative one or more segments on said second client node includes video with one of: (i) reduced motion, and (ii) no motion.

21. A method for presenting a networked presentation, comprising:

storing a plurality of segments of a presentation for network access via one or more content supplying nodes of a communications network, wherein there are subcollections of one or more of the segments, each subcollection having a predetermined presentation order and there is a first and a second of the subcollections, wherein said first subcollection is replaceable with said second subcollection when presenting the presentation;

identifying a plurality of network client nodes for presenting the presentation;

transmitting, via the communications network, presentation control information to a first and second of the client nodes;

first identifying said first subcollection for presenting at the first client node using said transmitted presentation control information;

second identifying said second subcollection for presenting at the second client node in place of the first subcollection, using said transmitted presentation control information;

first retrieving said first subcollection from said content supplying nodes for presenting at the first client node;

second retrieving said second subcollection from said content supplying nodes for presenting at the second client node substantially simultaneously with the presenting of the first subcollection at the first client node.

22. A method as claimed in claim 21, wherein said step of transmitting to the first and second client nodes is performed substantially simultaneously, using the Internet as at least a portion of the communications network.

23. A method as claimed in claim 22, further including a step of synchronously presenting the presentation at the first client node with presenting the presentation at the second client node so that each of the subcollections presented at the first client node is presented substantially simultaneously with some of the subcollections at the second client node.

24. A method as claimed in claim 23, wherein said step of synchronously presenting includes obtaining, by said first client node, a network performance measurement of a network transmission from a first of the content supplying network nodes to the first client node.

25. A method as claimed in claim 21, wherein said step of first retrieving includes retrieving the first subcollection by the first client node from a first of the content supplying nodes; and

said step of second retrieving includes retrieving the second subcollection by the second client node from a second of the content supplying nodes different from the first content supplying node.

26. A method as claimed in claim 21, further including synchronizing the presenting of the first and second subcollections at the first and second client nodes with a corresponding audio portion of the presentation provided at the sites of the first and second client nodes, wherein the corresponding audio portion is provided to the sites using a different network protocol from a protocol used in said step of transmitting via the communications network.

27. The method as claimed in claim 21, wherein said step of first identifying occurs prior to said step of first retrieving and said step of first identifying includes:

obtaining one or more measurements related to an expected time for transmitting said first subcollection to the first client node via the communications network;

wherein said one or more measurements are indicative of one or more of:

(a) a size of said first subcollection;

(b) a bandwidth of previous transmissions via the communications network to the first client node;

(c) an overhead indicative of a protocol used in transmissions via the communication network to the first client node;

(d) an allotted time for said first client to receive said first subcollection;

(e) a fluctuation in bandwidth of the communications network;

(f) an error rate from the communications network;

(g) a predictive statistical expectation of a bandwidth on the communications network.

28. The method as claimed in claim 21, further including:

establishing whether said first subcollection is cached at said first client node within a desired time prior to a performance of the cached subcollection.

29. The method as claimed in claim 28, further including determining said desired time by determining one or more of:

(a) a measurement related to the performance of the presentation at said second client node;

(b) a predetermined length of time; and

(c) a length of time determined by a leader for the presentation.

30. The method as claimed in claim 28, further including determining said desired time by comparing: (a) a transmission rate of the communications network between the first client node and at least one of said content supplying nodes; and (b) a transmission rate of the communications network between said second client node, and at least one of said content supplying nodes.

31. A method for presenting a networked presentation, comprising:

storing a plurality of segments for a presentation, wherein said segments are network accessible from one or more content supplying network nodes for presenting the presentation, and wherein for a first subcollection of one or more of the segments, said first subcollection is capable of being accessed from a first of the content supplying nodes, and at least one of (a) and (b):

(a) said first subcollection has a corresponding different second subcollection of one or more of said segments that has been identified as a replacement for the first subcollection, and

(b) said first subcollection is capable of being accessed from a second of said content supplying nodes;

providing for a first client node, a network transmission of the presentation, wherein the first client node has network access to at least one of: the first and second subcollections, and the first and second content supplying nodes;

determining, for the first client node, a measurement indicative of an expected network performance of a communications network for transmitting the first subcollection from the first content supplying node to the first client node;

selecting at least one of: the second subcollection and the second content supplying node when said measurement is indicative of an undesirable performance of the presentation at the first client node.

32. A method as claimed in claim 31, wherein said providing step includes accessing, by the first client node, said segments: (a) from said first content supplying node via a first route through the communications network, and (b) from said second content supplying node via a second route through the communications network;

wherein said first route does not include said second content supplying node, and said second route does not include said first content supplying node.

33. A presentation system for presenting a multimedia presentation having video and audio portions that correspond in content, comprising:

one or more video supplying network nodes for communicating one or more video portions of the multimedia presentation to one or more networked client nodes;

a phone bridge controller for providing commands to one or more phone bridges for routing presentation related audio communication, to a corresponding telephony device at each site having one of the client nodes, wherein: (a) each of one or more portions of the related audio communication corresponds in content with one of the video portions, and (b) the telephony devices at the sites transform the presentation related audio communications into an audible form having natural language speech included therein;

a presentation controller for synchronizing a presenting, at the client nodes, of predetermined ones of the video and audio portions that correspond in content, wherein for each of the client nodes, said presentation controller: (a) communicates with the client node for providing information used for identifying a particular one of the video portions for transmission from one of the video supplying network nodes to the client node; and (b) communicates with said phone bridge controller for routing, to the client node, the audio portion corresponding in content with the particular video portion.

34. A method of presenting a multimedia presentation comprising:

storing a script of one or more presentation commands for performing multimedia segments of said presentation wherein a first of said one or more commands refer-

ences one or more unresolved identifiers of one or more content supplying nodes providing access to at least a video portion of a first subcollection of one or more of said segments via a communications network;

storing a communications network identifier for each of one or more of said content supplying nodes providing network access to at least said video portion of said first subcollection;

identifying one or more client nodes for receiving a performance of said presentation;

resolving said unresolved identifiers of a first of said commands using said stored communications network identifiers for said one or more content supplying nodes, thereby obtaining a resolved command;

performing said resolved command at each of said client nodes during said performance by requesting said at least video portion of said first subcollection from a first of said content supplying nodes;

requesting by a first of said client nodes, when said at least video portion of said first subcollection is not received by said first client node within a predetermined time, one of: (a) at least a video portion of an alternative subcollection of one or more of said segments, in place of said at least video portion of said first subcollection, from one of said content supplying nodes, and (b) said at least video portion of said first subcollection from an alternate one of said content supplying nodes.

35. A method as claimed in claim **34**, further including transmitting said resolved command from a presentation controlling node to each of said client nodes via at least a portion of one of: the Internet, and a network using TCP/IP as a communication protocol.

36. The method of claim **34**, further including a step of controlling said performance of said presentation via a leader node receiving input from a leader for said performance of said presentation, wherein the leader directs a pace and content of the presentation performance via a presentation controlling network node, wherein the presentation controlling network node synchronizes said performance of said presentation on said first client node with a performance of said presentation on a second client node so that when one of said first and said alternative subcollection are presented on said first client node, there is a synchronized performance of a second subcollection of said segments on said second client node, wherein said first and second subcollections correspond in content.

37. A network presentation distribution system for presenting a presentation, comprising:

one or more presentation content supplying nodes of a communications network, said content supplying nodes for providing access to a collection of data segments of said presentation using said communications network wherein said collection includes first and second subcollections of one or more of said segments;

a presentation controlling node for transmitting to at least a first client node, via the communications network, presentation control information used for identifying a group of subcollections of said segments, said group including said first and second subcollections; and

a first segment selector, activated in response to said first client node receiving said presentation control information, for selecting one of said first and second subcollections for transmitting said selected subcollection from one of said presentation content supplying nodes to said first client node;

wherein said first segment selector includes a comparator for comparing (a) and (b) following: (a) a value indicative of a length of time expected for said first client node to receive one of said first and second subcollections, and (b) a value indicative of one of: (i) a length of time related to one or more other client nodes receiving one or more subcollections of said collection, (ii) a predetermined default length of time, and (iii) a length of time determined by a leader of said presentation performance.

38. A network presentation distribution system for presenting a presentation, comprising:

one or more presentation content supplying nodes of a communications network, said content supplying nodes for providing access to a collection of data segments of said presentation using said communications network, wherein said collection includes first and second subcollections of one or more of said segments;

a presentation controlling node for transmitting to at least a first client node, via the communications network, presentation control information used for identifying said first and second subcollections;

a first segment selector, activated in response to said first client node receiving said presentation control information, for selecting one of said first and second subcollections for transmitting said selected subcollection from one of said presentation content supplying nodes to said first client node; and

a phone bridge controller for controlling one or more telephone bridges providing audio communication during a performance of the presentation, through a telephone at a client site having said first client node, wherein said telephone provides the audio communication to the client site different from said communications network.

39. A network presentation distribution system for presenting a presentation, comprising:

a first and second presentation content supplying nodes of a communications network, said first and second content supplying nodes for providing access to one or more collections of data segments of said presentation using said communications network;

a presentation controlling node for transmitting to at least a first client node, presentation control information used for identifying a first subcollection of said data segments for presenting at said first client node;

a content node selector, activated in response to said first client node receiving said presentation control information, for selecting one of said first and second content supplying nodes for transmitting one of: (a) said first subcollection to said first client node using said communications network; and (b) an alternative subcollection of one or more of said segments predetermined as a replacement for said first subcollection; and

a phone bridge controller for routing presentation related audio communications to a client site having said first client node, via one or more phone bridges, wherein a telephone at said client site transforms the presentation related audio communications into an audible communication having natural language speech included therein.

40. The network presentation distribution system of claim **39**, further including:

a cache at said first client node for caching, as a cached subcollection, said selected one of said first subcollection and said alternative subcollection;

wherein said cached subcollection is cached within a desired time prior to a performance of said cached

subcollection, and wherein said desired time is determined using one or more of:

(a) a measurement related to the performance of the presentation at said second client node;

(b) a predetermined length of time; and

(c) a length of time determined by a leader for the presentation.

41. A network presentation distribution system for presenting a presentation, comprising:

a first and second presentation content supplying nodes of a communications network, said first and second content supplying nodes for providing access to one or more collections of data segments of said presentation using said communications network;

a presentation controlling node for transmitting to at least a first client node, presentation control information used for identifying a first subcollection of said segments for presentation at said first client node;

a content node selector, activated in response to said first client node receiving said presentation control information, for selecting one of said first and second content supplying nodes for transmitting one of: (a) said first subcollection to said first client node using said communications network; and (b) an alternative subcollection of one or more of said segments predetermined as a replacement for said first subcollection; and

a phone bridge controller for routing presentation related audio communications to a client site having said first client node, via one or more phone bridges, wherein a telephone at said client site transforms the presentation related audio communications into an audible communication having natural language speech included therein.

42. A network presentation distribution system for presenting a presentation, comprising:

a first and second presentation content supplying nodes of a communications network, said first and second content supplying nodes for providing access to one or more collections of data segments of said presentation using said communications network;

a presentation controlling node for transmitting via the communications network, to at least a first client node, presentation control information used for identifying a first subcollection of said segments for presentation at said first client node;

a content node selector, activated in response to said first client node receiving said presentation control information, for selecting one of said first and second content supplying nodes for transmitting one of: (a) said first subcollection to said first client node using said communications network; and (b) an alternative subcollection of one or more of said segments predetermined as a replacement for said first subcollection;

wherein said presentation controlling node includes a presentation script processing component for generating presentation performance commands from a script for said presentation, wherein for said first client node, said generated commands synchronize a display of a video content of said segments with a performance of a related presentation audio content; and

wherein said presentation controlling node includes a phone bridge controller for directing a phone bridge to provide audio communications between a client site having said first client node and a leader of a performance of said presentation, wherein said phone bridge routes presentation performance related audio information differently from network communications between said presentation controlling node and first client node via said communications network.

43. A network presentation distribution system for presenting a presentation on a communications network having unexpected network performance fluctuations at a user node, comprising:

one or more presentation content supplying nodes of a communications network, said content supplying nodes for providing access, at the user node via the communications network, to a collection of data segments of said presentation using said communications network, wherein said collection includes first and second subcollections of one or more of said segments;

a computational component for determining network performance information of the communications network, wherein said computational component determines said network performance information using network data obtained from network transmissions detected at said user node;

a segment selector, activated during the presentation for selecting, using said network performance information, one of said first and second subcollections for transmitting from one of said presentation content supplying nodes to said user node; and

a presentation component at said user node for presenting said selected one of said first and second subcollections to a user at the user node.

* * * * *