US011445241B2

(12) **United States Patent**
Kurita et al.

(10) **Patent No.: US 11,445,241 B2**
(45) **Date of Patent: Sep. 13, 2022**

(54) **INFORMATION PROCESSING APPARATUS AND INFORMATION PROCESSING METHOD**

(71) Applicant: **MAXELL, LTD.**, Kyoto (JP)

(72) Inventors: **Toshiyuki Kurita**, Yokohama (JP); **Hitoaki Owashi**, Yokohama (JP)

(73) Assignee: **MAXELL, LTD.**, Kyoto (JP)

(*) Notice: Subject to any disclaimer, the term of this patent is extended or adjusted under 35 U.S.C. 154(b) by 0 days.

(21) Appl. No.: **17/568,166**

(22) Filed: **Jan. 4, 2022**

(65) **Prior Publication Data**

US 2022/0132204 A1 Apr. 28, 2022

Related U.S. Application Data

(63) Continuation of application No. 16/738,059, filed on Jan. 9, 2020, which is a continuation of application
(Continued)

(30) **Foreign Application Priority Data**

Nov. 28, 2007 (JP) 2007-306750

(51) **Int. Cl.**
H04N 21/4363 (2011.01)
H04L 69/14 (2022.01)
(Continued)

(52) **U.S. Cl.**
CPC ***H04N 21/43637*** (2013.01); ***H04L 69/14*** (2013.01); ***H04N 5/44*** (2013.01);
(Continued)

(58) **Field of Classification Search**
CPC H04N 21/43637; H04N 5/44; H04N 21/4122; H04N 21/41407; H04N 21/4367; H04L 69/14
See application file for complete search history.

(56) **References Cited**

U.S. PATENT DOCUMENTS

4,561,100 A 12/1985 Asao et al.
5,678,173 A 10/1997 Mihara
(Continued)

FOREIGN PATENT DOCUMENTS

CN 1336768 A 2/2002
CN 1428031 A 7/2003
(Continued)

OTHER PUBLICATIONS

Office Action, dated Jun. 7, 2018, which issued during the prosecution of Chinese Patent Application No. 201510969210.6, which corresponds to the present application.
(Continued)

Primary Examiner — Mekonnen D Dagnew
(74) *Attorney, Agent, or Firm* — Mattingly & Malur, PC

(57) **ABSTRACT**

While presenting on a display apparatus videos of high picture quality obtained from portable video processing apparatuses such as a camera and a cellular, it is possible to communicate with the Internet and/or a home network. A display apparatus includes a first radio communication unit capable of receiving video information by radio from an external video processing apparatus, a second radio communication unit capable of connecting by radio to a network, and a control unit for controlling assignment of connection by radio transmission for each of the first and second radio communication units. The control unit assigns connection of the first radio communication unit with higher priority and controls the assignment of the transmission rate such that the transmission rate between the first radio communication unit and the external video processing apparatus is more than that between the second radio communication unit and the network.

28 Claims, 9 Drawing Sheets

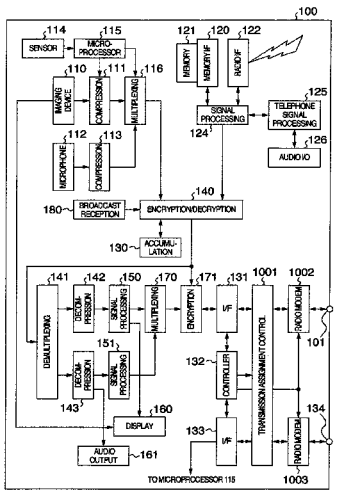

Related U.S. Application Data

No. 16/269,662, filed on Feb. 7, 2019, which is a continuation of application No. 15/891,085, filed on Feb. 7, 2018, now Pat. No. 10,244,284, which is a continuation of application No. 15/208,886, filed on Jul. 13, 2016, now Pat. No. 10,129,590, which is a continuation of application No. 12/260,410, filed on Oct. 29, 2008, now Pat. No. 9,420,212.

(51) **Int. Cl.**

H04N 21/41	(2011.01)
H04N 21/414	(2011.01)
H04N 5/44	(2011.01)
H04N 21/4367	(2011.01)

(52) **U.S. Cl.**
CPC ... ***H04N 21/4122*** (2013.01); ***H04N 21/41407*** (2013.01); *H04N 21/4367* (2013.01)

(56) **References Cited**

U.S. PATENT DOCUMENTS

5,724,355	A	3/1998	Bruno et al.	
5,758,262	A	5/1998	Grysiewicz et al.	
5,838,384	A	11/1998	Schindler et al.	
6,037,991	A	3/2000	Thro et al.	
6,763,226	B1	7/2004	McZeal, Jr.	
6,957,081	B2	10/2005	Leyh et al.	
7,146,133	B2	12/2006	Bahl et al.	
7,224,964	B2	5/2007	Souissi et al.	
7,233,359	B2	6/2007	Suda	
7,590,075	B2	9/2009	Pirzada et al.	
7,668,565	B2	2/2010	Ylanen et al.	
7,787,882	B2	8/2010	Feher	
7,970,350	B2	6/2011	Sheynman et al.	
7,978,774	B2	7/2011	Feher	
7,983,678	B2	7/2011	Feher	
8,045,922	B2	10/2011	Sherman et al.	
8,050,707	B2	11/2011	Pirzada et al.	
8,073,492	B2	12/2011	Karaoguz et al.	
8,306,525	B2	11/2012	Feher	
8,311,509	B2	11/2012	Feher	
8,325,237	B2	12/2012	Bessone et al.	
8,572,257	B2	10/2013	Dua	
8,625,547	B1	1/2014	Miller, II	
8,693,950	B2	4/2014	Desai	
8,796,046	B2	8/2014	Chen et al.	
9,344,237	B2	5/2016	Margulis	
10,129,590	B2 *	11/2018	Kurita	H04N 21/4122
2003/0188322	A1	10/2003	Bontempi	
2003/0189638	A1	10/2003	Fry	
2004/0045030	A1	3/2004	Reynolds et al.	
2004/0048572	A1	3/2004	Godfrey	
2004/0107208	A1	3/2004	Seet et al.	
2004/0077313	A1	4/2004	Oba et al.	
2004/0193647	A1	9/2004	Ueda et al.	
2004/0215769	A1	10/2004	Yoshida et al.	
2005/0034169	A1	2/2005	Maeda et al.	
2005/0062945	A1	3/2005	Shin-Pin	
2005/0064860	A1	3/2005	Deline	
2005/0130586	A1	6/2005	Gnuschke et al.	
2005/0136949	A1	6/2005	Barnes, Jr.	
2005/0144478	A1	6/2005	Yamanaka et al.	
2005/0190747	A1	9/2005	Sindhwani et al.	
2005/0215284	A1	9/2005	Su et al.	
2005/0227702	A1	10/2005	Nishimura et al.	
2005/0249245	A1	11/2005	Hazani et al.	
2006/0025674	A1	2/2006	Kiraly et al.	
2006/0097955	A1	5/2006	Kato	
2006/0128425	A1	6/2006	Rooyen	
2006/0133418	A1	6/2006	Anand	
2006/0135076	A1 *	6/2006	Honkanen	H04B 1/3805 455/67.13
2006/0203758	A1 *	9/2006	Tee	H04W 88/04 709/227
2006/0256747	A1	11/2006	Jaakkola	
2006/0258289	A1	11/2006	Dua	
2007/0006255	A1	1/2007	Cain	
2007/0021140	A1	1/2007	Keyes, IV et al.	
2007/0070960	A1	3/2007	Barak et al.	
2007/0072642	A1	3/2007	Kangas	
2007/0085933	A1	4/2007	Takagi et al.	
2007/0086724	A1	4/2007	Grady et al.	
2007/0091835	A1	4/2007	Jo et al.	
2007/0094691	A1	4/2007	Gazdzinski	
2007/0109973	A1 *	5/2007	Trachewsky	H04W 16/14 370/252
2007/0123163	A1	5/2007	Matsubara	
2007/0165754	A1	7/2007	Kiukkonen et al.	
2007/0184785	A1	8/2007	Yoshida	
2007/0223505	A1	9/2007	Itai et al.	
2007/0238482	A1	10/2007	Rayzman et al.	
2007/0242313	A1	10/2007	Shiomi	
2007/0265034	A1	11/2007	Kasslin et al.	
2007/0275746	A1	11/2007	Bitran	
2008/0025273	A1	1/2008	Sano	
2008/0081663	A1	4/2008	Kasslin et al.	
2008/0101446	A1	5/2008	Gautier et al.	
2008/0109307	A1	5/2008	Ullah	
2008/0139118	A1	6/2008	Sanguinetti	
2008/0188182	A1	8/2008	Macholz	
2008/0201751	A1	8/2008	Ahmed et al.	
2008/0229369	A1	9/2008	Lewis	
2008/0291839	A1	11/2008	Hooper et al.	
2008/0304431	A1	12/2008	Karaoguz	
2009/0091663	A1	4/2009	Toh et al.	
2009/0103518	A1	4/2009	Yu et al.	

FOREIGN PATENT DOCUMENTS

CN	1585403	A	2/2005
CN	1588997		3/2005
CN	1791092	A	6/2006
CN	1984481	A	6/2007
EP	1334617	A2	8/2003
EP	1 708 467	A1	10/2006
EP	2 019 560	A1	1/2009
EP	1 747 616	B1	1/2016
JP	11-187070	A	7/1999
JP	2002-135304		5/2002
JP	2006-352522	A	12/2006
JP	2007-202115		8/2007
JP	2007-258865		10/2007
JP	2007-282097		10/2007
JP	2008-035420		2/2008
KR	2002-0016101	A	3/2002
WO	01/93505	A2	12/2001
WO	2005060127	A1	6/2005
WO	2006/098825	A2	9/2006
WO	2007/010444	A1	1/2007
WO	2007/069210	A2	6/2007
WO	2007/091202	A2	8/2007
WO	2008/072057	A2	6/2008

OTHER PUBLICATIONS

Kazantzidis, M. et al., "Bluetooth: An Enabler for Personal Area Networking," Per Johansson, Ericsson Research, 2001, UCLA.
Hypertext Transfer Protocol—HTTP/1.2 RFC2068, 1997.
Martyn Mallick, Mobile and Wireless Design Essentials, John Wiley & Sons 2003.
TCP Keepalive HowTo, Rev. 1.0, Keepalive Overview, May 4, 2007.
FCC Part 15 Test Report for the Apple Airport Extreme and Bluetooth 2.0+EDR Module, Mar. 31, 2005.
Transmission Control Protocol, RFC 793, Sep. 1981.
Mac G5 User's Guide, Copyright 2005.
Apple AirPort Extreme and Apple Bluetooth 2.0+EDR, Copyright 2005.
MacBook Pro User's Guide, Copyright 2006.
Mallick, M., "Mobile and Wireless Design Essentials", 2003, pp. 1-352.

(56) **References Cited**

OTHER PUBLICATIONS

Apostolopoulos, J. G., et al., "Video Streaming: Concepts, Algorithms, and Systems", Sep. 18, 2002, pp. 1-34.
Newton, H., "Newton's Telecom Dictionary 20th Update and Expanded Edition", CMP Books, 2004, pp. 130, 533 and 675-676.
Ribas-Corbera, J., et al., "A Flexible Decoder Buffer Model for JVT Video Coding", IEEE ICIP 2002, pp. 493-496.
Sheu, T. et al., "A Buffer Allocation Mechanism for VBR Video Playback", IEEE 2000, pp. 1641-1644.
Apple Inc. v. *Maxell, Ltd*., Petition for Inter Partes Review of U.S. Pat. No. 10,129,590, Inter Partes Review No. IPR2021-00400 filed Jan. 12, 2021.
Lenovo Group Ltd., Lenovo (United States) Inc., and Motorola Mobility LLC's Invalidity Contentions which were filed in the following litigation: *Maxell, Ltd*. v. *Lenovo Group Ltd., Lenovo (United States) Inc., and Motorola Mobility LLC.*, Civil Action No. 6:21-cv-01169-ADA, filed Apr. 4, 2022.
Motorola Q9h and contemporaneously available Cellular, Wi-Fi, and/or Bluetooth-enabled computers, Copyright 2007.
Lenovo Group Ltd., Lenovo (United States) Inc., and Motorola Mobility LLC's Second Supplemental Preliminary Invalidity Contentions which filed in the following litigation: *Maxell, Ltd*. v. *Lenovo Group Ltd., Lenovo (United States) Inc., and Motorola Mobility LLC.*, Civil Action No. 6:21-cv-01169-ADA, filed Jul. 9, 2022.

* cited by examiner

FIG. 1

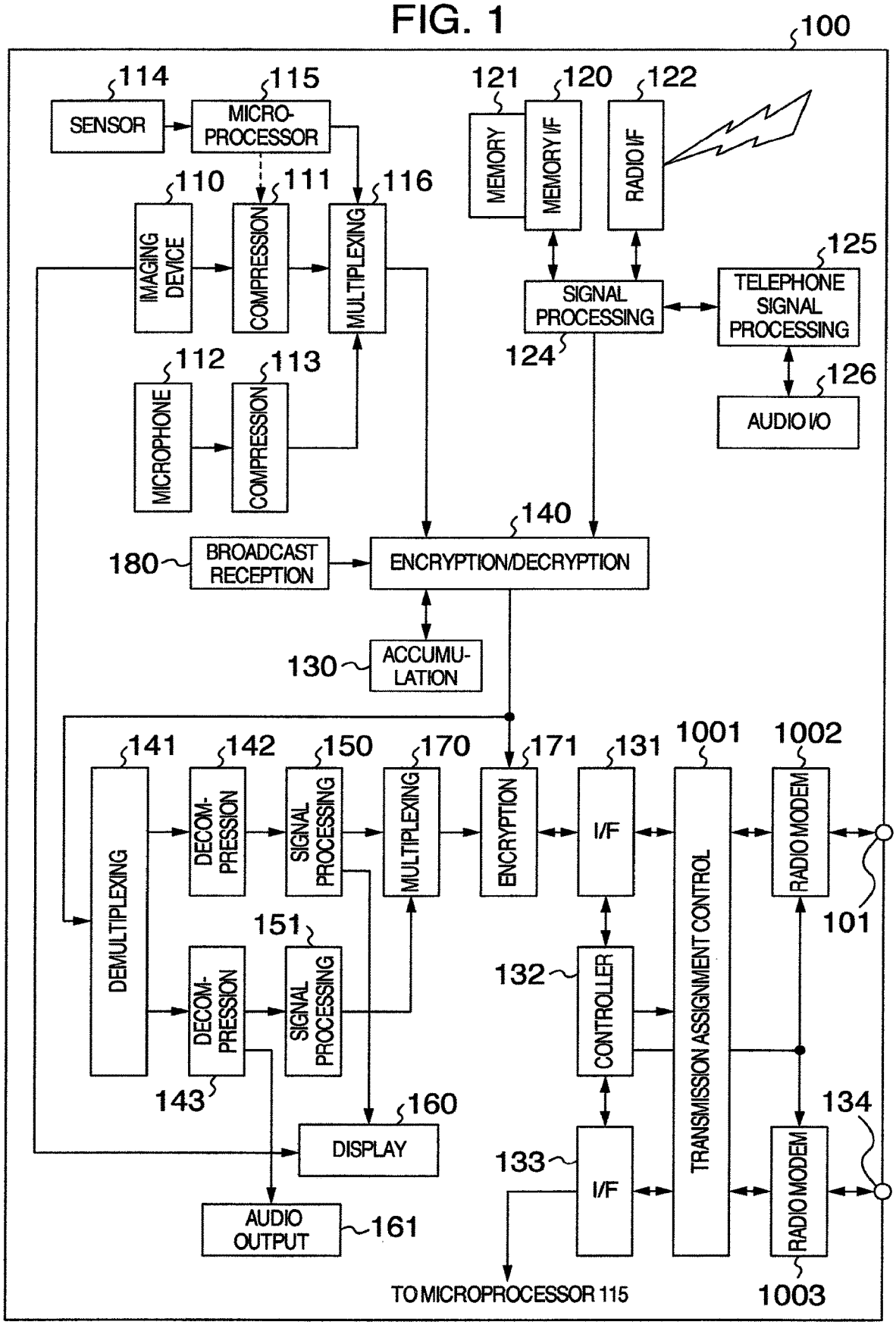
100
114
SENSOR
115
MICRO-PROCESSOR
121
MEMORY
120
MEMORY I/F
122
RADIO I/F
110
IMAGING DEVICE
111
COMPRESSION
116
MULTIPLEXING
125
TELEPHONE SIGNAL PROCESSING
SIGNAL PROCESSING
124
126
AUDIO I/O
112
MICROPHONE
113
COMPRESSION
140
180
BROADCAST RECEPTION
ENCRYPTION/DECRYPTION
130
ACCUMU-LATION
141
DEMULTIPLEXING
142
DECOM-PRESSION
150
SIGNAL PROCESSING
170
MULTIPLEXING
171
ENCRYPTION
131
I/F
1001
TRANSMISSION ASSIGNMENT CONTROL
1002
RADIO MODEM
101
151
DECOM-PRESSION
SIGNAL PROCESSING
132
CONTROLLER
143
160
DISPLAY
133
I/F
134
RADIO MODEM
AUDIO OUTPUT
161
TO MICROPROCESSOR 115
1003

FIG. 2

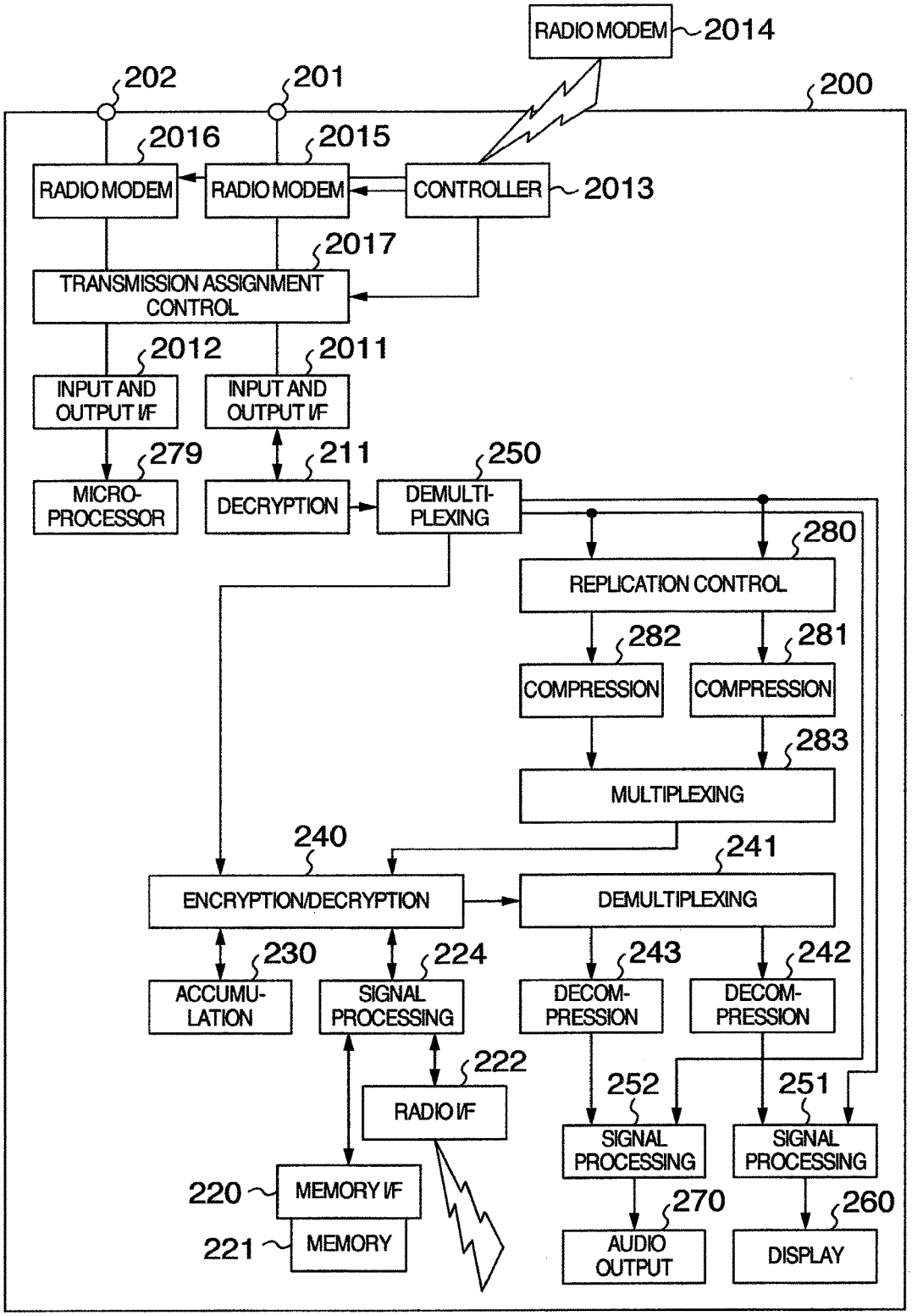
RADIO MODEM
2014
202
201
200
2016
2015
RADIO MODEM
RADIO MODEM
CONTROLLER
2013
2017
TRANSMISSION ASSIGNMENT CONTROL
2012
2011
INPUT AND OUTPUT I/F
INPUT AND OUTPUT I/F
279
211
250
MICRO-PROCESSOR
DECRYPTION
DEMULTI-PLEXING
280
REPLICATION CONTROL
282
281
COMPRESSION
COMPRESSION
283
MULTIPLEXING
240
241
ENCRYPTION/DECRYPTION
DEMULTIPLEXING
230
224
243
242
ACCUMU-LATION
SIGNAL PROCESSING
DECOM-PRESSION
DECOM-PRESSION
222
252
251
RADIO I/F
SIGNAL PROCESSING
SIGNAL PROCESSING
220
MEMORY I/F
270
260
221
MEMORY
AUDIO OUTPUT
DISPLAY

FIG. 3

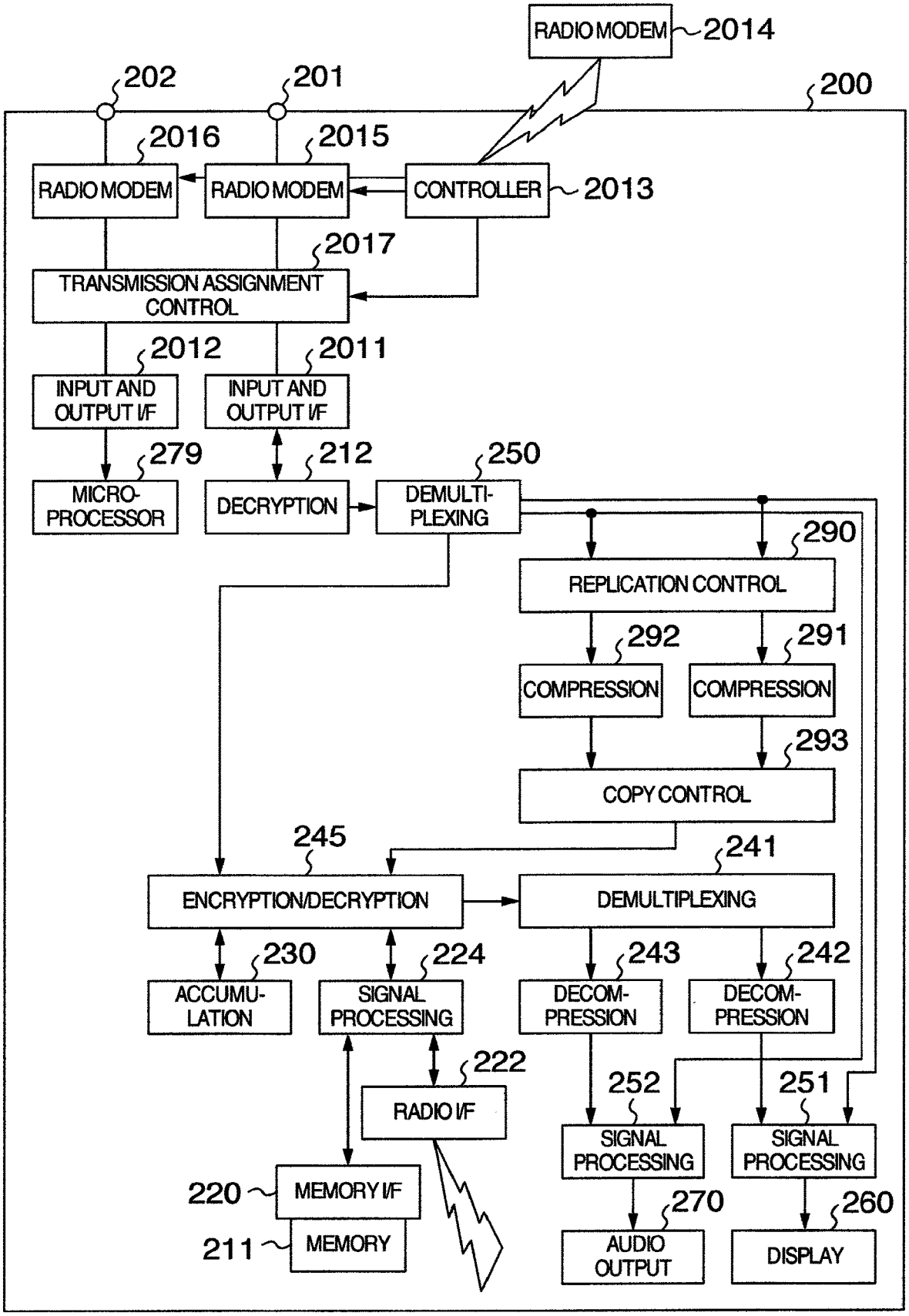
RADIO MODEM
2014
202
201
200
2016
2015
RADIO MODEM
RADIO MODEM
CONTROLLER
2013
2017
TRANSMISSION ASSIGNMENT CONTROL
2012
2011
INPUT AND OUTPUT I/F
INPUT AND OUTPUT I/F
279
212
250
MICRO-PROCESSOR
DECRYPTION
DEMULTI-PLEXING
290
REPLICATION CONTROL
292
291
COMPRESSION
COMPRESSION
293
COPY CONTROL
245
241
ENCRYPTION/DECRYPTION
DEMULTIPLEXING
230
224
243
242
ACCUMU-LATION
SIGNAL PROCESSING
DECOM-PRESSION
DECOM-PRESSION
222
252
251
RADIO I/F
SIGNAL PROCESSING
SIGNAL PROCESSING
220
MEMORY I/F
270
260
211
MEMORY
AUDIO OUTPUT
DISPLAY

FIG. 4

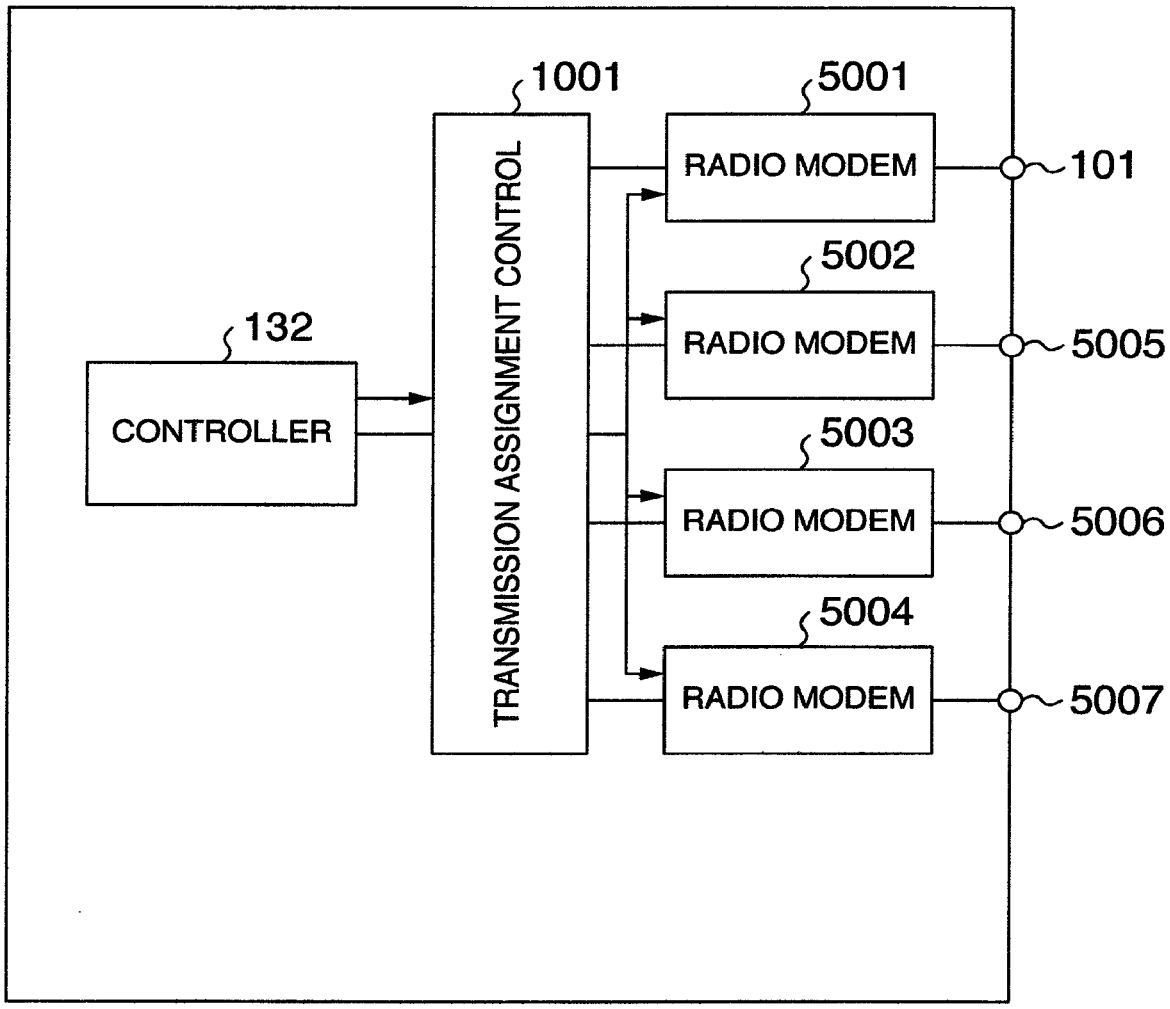
1001
5001
RADIO MODEM
101
5002
RADIO MODEM
5005
132
CONTROLLER
TRANSMISSION ASSIGNMENT CONTROL
5003
RADIO MODEM
5006
5004
RADIO MODEM
5007

FIG. 5

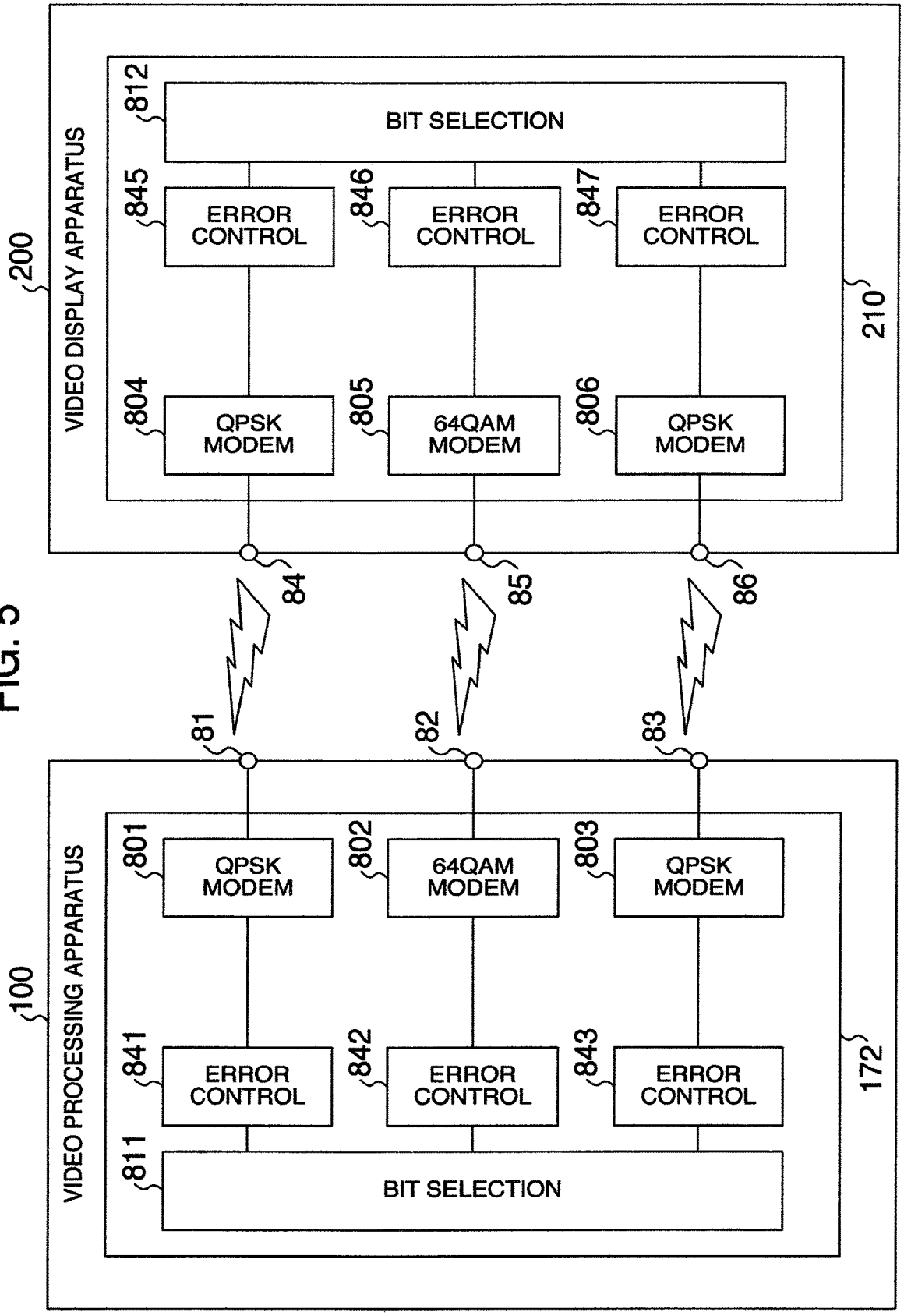
200
VIDEO DISPLAY APPARATUS
812
BIT SELECTION
845
ERROR CONTROL
846
ERROR CONTROL
847
ERROR CONTROL
804
QPSK MODEM
805
64QAM MODEM
806
QPSK MODEM
210
84
85
86
81
82
83
100
VIDEO PROCESSING APPARATUS
801
QPSK MODEM
802
64QAM MODEM
803
QPSK MODEM
841
ERROR CONTROL
842
ERROR CONTROL
843
ERROR CONTROL
811
BIT SELECTION
172

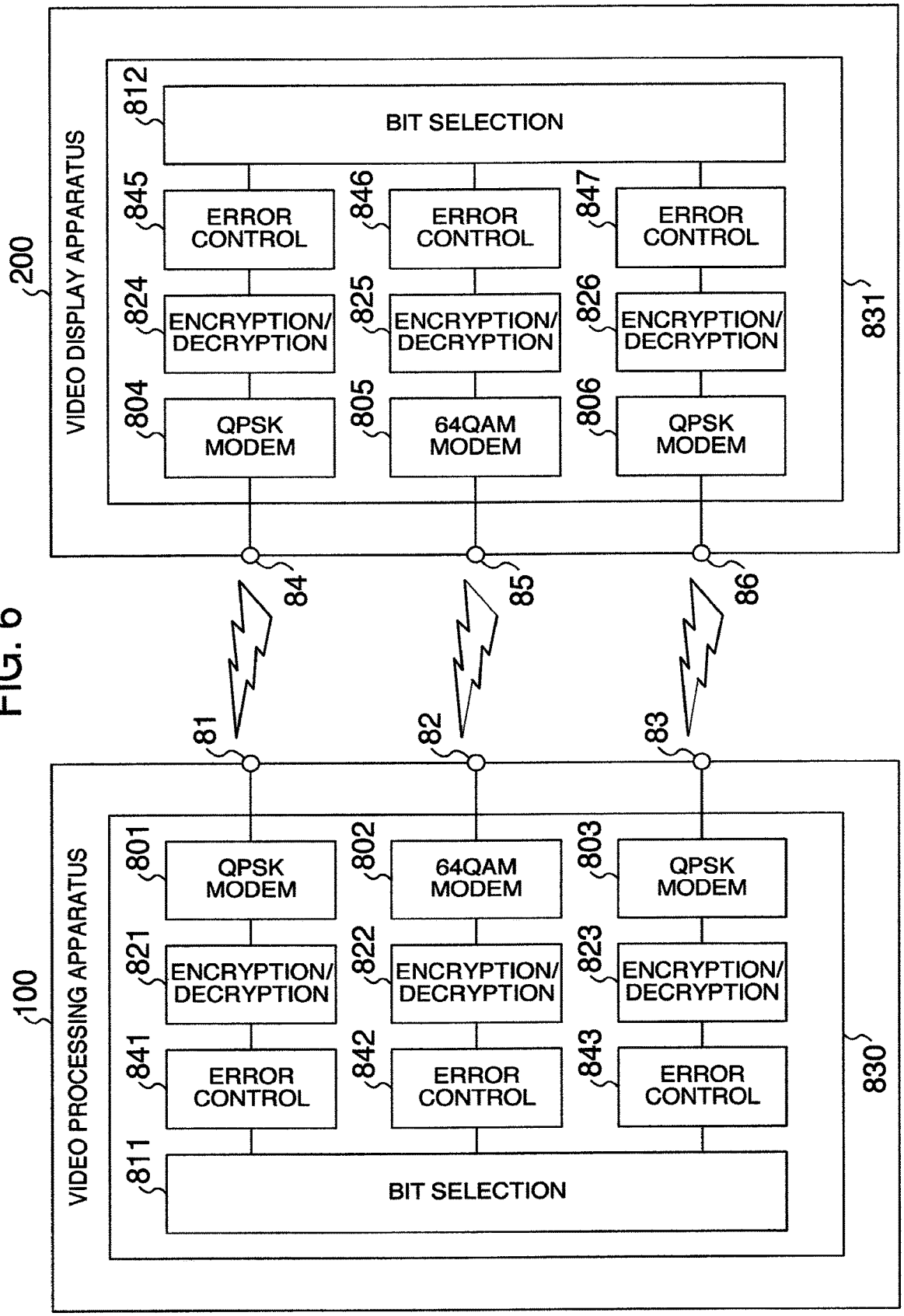
200
VIDEO DISPLAY APPARATUS
812
BIT SELECTION
845
ERROR CONTROL
846
ERROR CONTROL
847
ERROR CONTROL
824
ENCRYPTION/ DECRYPTION
825
ENCRYPTION/ DECRYPTION
826
ENCRYPTION/ DECRYPTION
804
QPSK MODEM
805
64QAM MODEM
806
QPSK MODEM
831
84
85
86
81
82
83
100
VIDEO PROCESSING APPARATUS
801
QPSK MODEM
802
64QAM MODEM
803
QPSK MODEM
821
ENCRYPTION/ DECRYPTION
822
ENCRYPTION/ DECRYPTION
823
ENCRYPTION/ DECRYPTION
841
ERROR CONTROL
842
ERROR CONTROL
843
ERROR CONTROL
830
811
BIT SELECTION

FIG. 6

FIG. 7

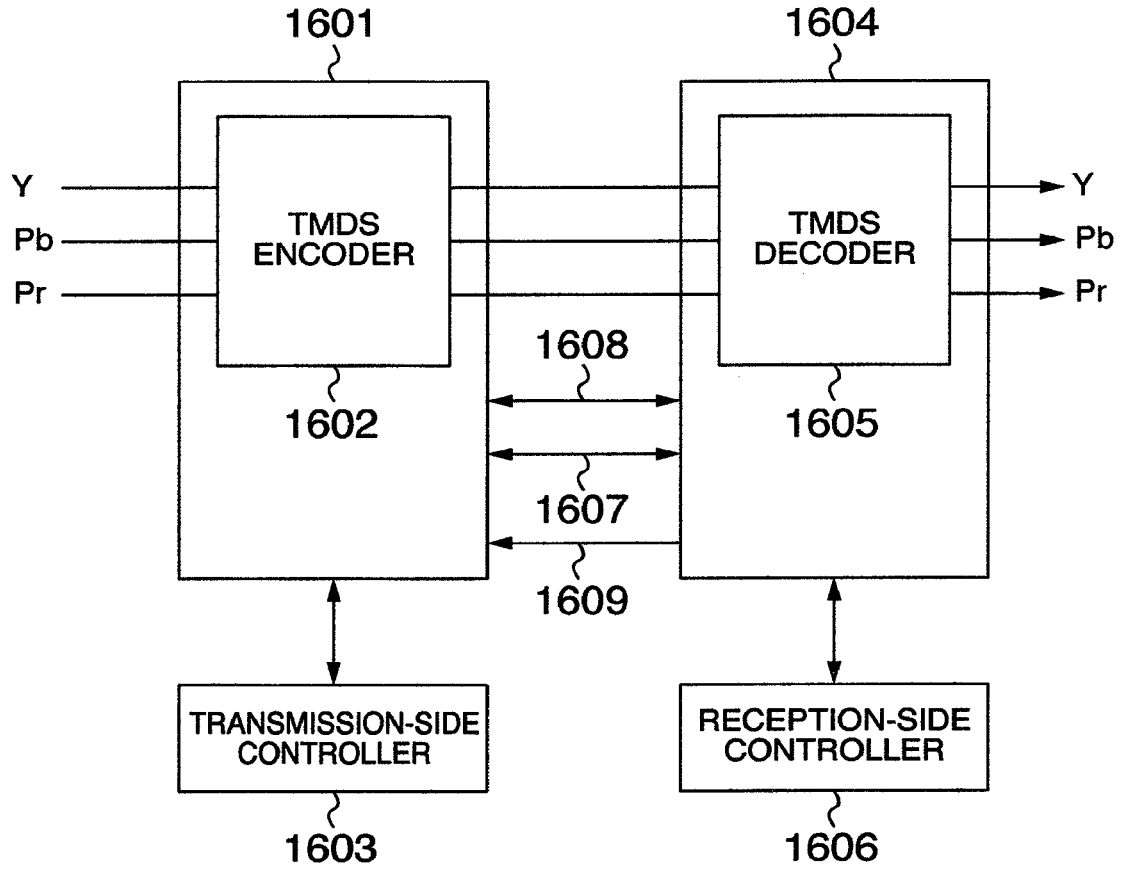
1601
1604
Y
Pb
Pr
TMDS ENCODER
TMDS DECODER
Y
Pb
Pr
1608
1602
1605
1607
1609
TRANSMISSION-SIDE CONTROLLER
RECEPTION-SIDE CONTROLLER
1603
1606

FIG. 8

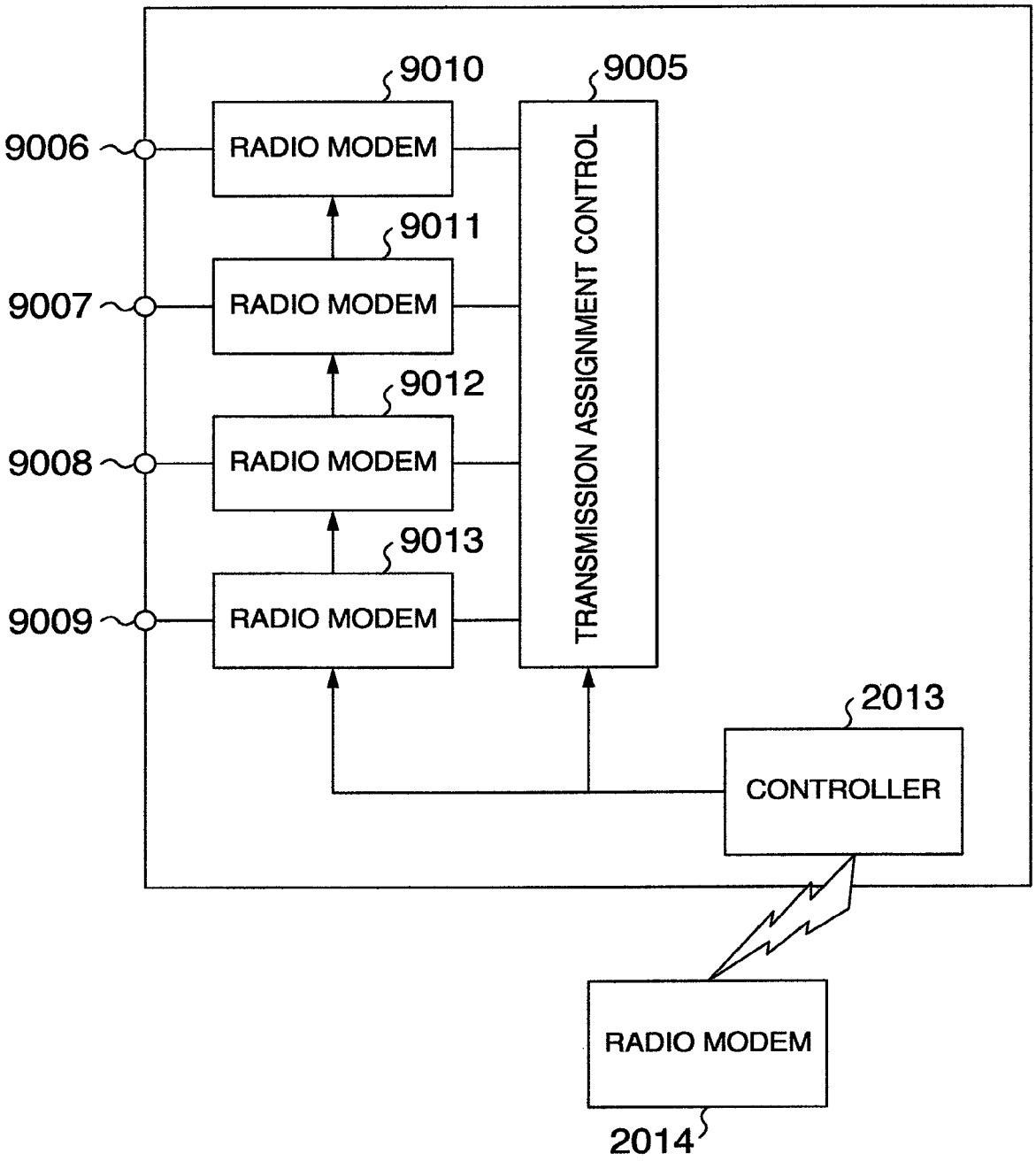
9010
9005
9006
RADIO MODEM
TRANSMISSION ASSIGNMENT CONTROL
9011
9007
RADIO MODEM
9012
9008
RADIO MODEM
9013
9009
RADIO MODEM
2013
CONTROLLER
RADIO MODEM
2014

FIG. 9

SCHEME	SCHEME 1	SCHEME 2
BANDWIDTH	6MHz	6MHz
CARRIER MODULATION SCHEME	64QAM	QPSK
CONVOLUTION CODE	3/4	2/3
GUARD INTERVAL	1/8	1/8
TRANSMISSION CAPACITY	17Mbps	5Mbps

FIG. 10

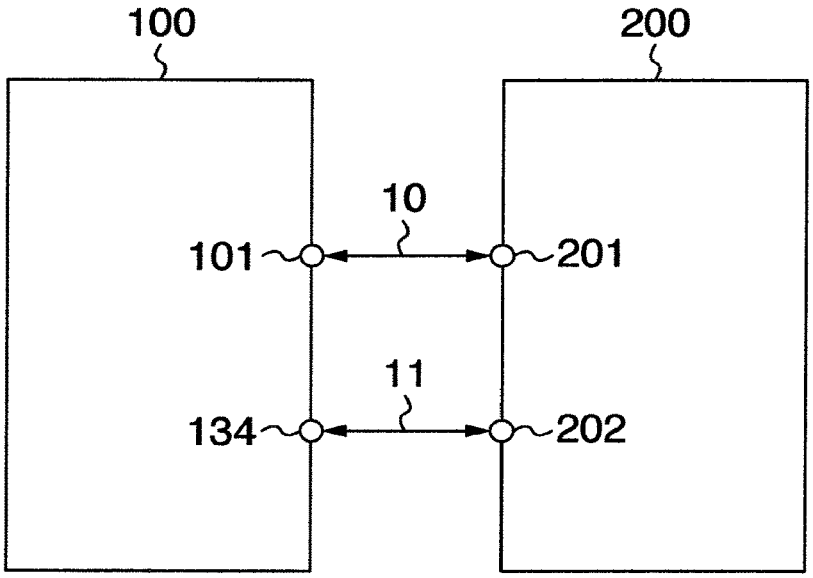

FIG. 11

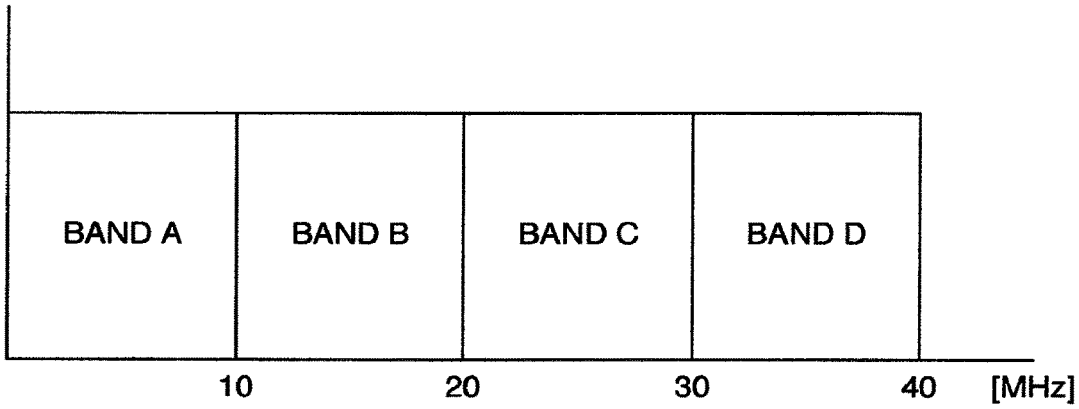

INFORMATION PROCESSING APPARATUS AND INFORMATION PROCESSING METHOD

INCORPORATION BY REFERENCE

The present application is a continuation of U.S. patent application Ser. No. 16/738,059, filed Jan. 9, 2020, which is a continuation of U.S. patent application Ser. No. 16/269,662, filed Feb. 7, 2019, which is a continuation of U.S. patent application Ser. No. 15/891,085, filed on Feb. 7, 2018, (now, U.S. Pat. No. 10,244,284), which is a continuation of U.S. patent application Ser. No. 15/208,886, filed on Jul. 13, 2016 (now, U.S. Pat. No. 10,129,590), which is a continuation of U.S. patent application Ser. No. 12/260,410, filed on Oct. 29, 2008 (now, U.S. Pat. No. 9,420,212), which claims priority to Japanese Patent Application No. 2007-306750, filed on Nov. 28, 2007, the contents of all of which are hereby incorporated by reference into this application.

BACKGROUND OF THE INVENTION

The present invention relates to a technique to establish connections between a plurality of apparatuses and networks by radio.

To connect a video processing apparatus to a video display apparatus as another video processing apparatus to view videos, there has been employed a method to establish analog connections therebetween to transmit video and audio signals. However, as digital apparatuses have been widely spread, there is employed, to prevent picture quality deterioration and to protect copyright of contents to be viewed, a method in which digital connections are established between the apparatuses and video and audio signals are encrypted to be transmitted therebetween.

High Definition Digital Multimedia Interface (HDMI) is known as an example of an interface for digital transmission. According to the HDMI, the base band signal and the audio signal of high definition are time-division multiplexed and the resultant signal is encrypted through HDCP for transmission thereof.

A conventional technique in which digitized video and audio signals are multiplexed for transmission as above is described in, for example, JP-A-2007-202115.

SUMMARY OF THE INVENTION

According to the HDMI, which is developed on assumption of uses for connections between apparatuses installed in a house of a family, consideration has not been given to connections with the internet and a network in the family or a home network while viewing high-quality videos. It is therefore an object of the present invention, devised to overcome the difficulty, to provide a technique wherein while presenting on a display apparatus videos of high picture quality obtained from portable video processing apparatuses such as a camera and a cellular phone, it is possible to communicate with the internet and/or a home network.

According to one aspect of the resent invention, there is provided a display apparatus including a first radio communication unit capable of receiving video information by radio from an external video processing apparatus, a second radio communication unit capable of connecting by radio to a network, and a connection assignment control unit for controlling assignment of connection by radio transmission for each of the first and second radio communication units.

The control unit assigns connection of the first radio communication unit with higher priority and controls the assignment of the transmission rate, for example, such that the transmission rate between the first radio communication unit and the external video processing apparatus is more than the transmission rate between the second radio communication unit and the network.

According to another aspect of the present invention, there is provided a video processing apparatus including a first radio communication unit capable of transmitting video information by radio to an external display apparatus, a second radio communication unit capable of connecting by radio to a network, and a connection assignment control unit for controlling assignment of connection by radio transmission for each of the first and second radio communication units. The control unit assigns connection of the first radio communication unit with higher priority and controls the assignment of the transmission rate, for example, such that the transmission rate between the first radio communication unit and the external video display apparatus is more than the transmission rate between the second radio communication unit and the network.

In the display apparatus constructed as above, the first radio communication unit can communicate video information of high picture quality with an external video processing apparatus. The second radio communication unit can connect by radio to the internet and a home network. The controller controls the transmission rate of the radio transmitter module to be assigned to the first radio communication unit and can change the transmission rate of the radio transmitter module to be assigned to the second radio communication unit. It is possible for the controller to determine and to control the radio transmission rates to be assigned to the first and second radio communication units. The controller controls the operation such that the assignment to the first radio communication module to conduct transmission to receive video information from an external video processing apparatus is carried out with higher priority. Therefore, it is possible that video information of high picture quality is continuously fed from the video processing apparatus to the video information apparatus as well as information is transmitted from the internet and a home network. There can be hence provided a video display apparatus having high serviceability.

According to the present invention, it is possible to communicate with a network while displaying videos of high picture quality obtained by a video processing apparatus.

Other objects, features and advantages of the invention will become apparent from the following description of the embodiments of the invention taken in conjunction with the accompanying drawings.

BRIEF DESCRIPTION OF THE DRAWINGS

FIG. **1** is a diagram showing an example of an embodiment of a video processing apparatus **100** according to the present invention;

FIG. **2** is a block diagram showing an example of an embodiment of a video display apparatus **200** according to the present invention;

FIG. **3** is a block diagram showing another example of an embodiment of a video display apparatus **200** according to the present invention;

FIG. **4** is a diagram showing an example of a radio modulator and demodulator or modem of the video processing apparatus **100**;

FIG. **5** is a block diagram showing an example of a system in which two video processing apparatuses are wirelessly connected to each other;

FIG. **6** is a block diagram showing another example of a system in which two video processing apparatuses are wirelessly connected to each other;

FIG. **7** is a diagram showing an example of structure of the HDMI;

FIG. **8** is a diagram showing an example of a radio modem of the video display apparatus;

FIG. **9** shows a diagram showing an example of transmission parameters of a radio modem in the embodiment;

FIG. **10** is a diagram showing connections between the video processing apparatus **100** and the video display apparatus **200** in the embodiment of the present invention; and

FIG. **11** is a diagram showing an example of assignment of bands in another example of a radio modem shown in FIGS. **4** and **8**.

DETAILED DESCRIPTION OF THE EMBODIMENTS

Referring now to the drawings, description will be given of an embodiment according to the present invention.

First Embodiment

FIG. **10** shows an embodiment of the present invention. In this example, the system includes two video processing apparatuses, i.e., a video processing apparatus **100** which is, for example, a portable video processing apparatus capable of receiving a digital broadcast signal via a base station antenna for cellular phones or a broadcast transmission tower and a video display apparatus **200** such as a tuner capable of receiving a digital broadcast signal from a broadcast transmission tower. These apparatuses are connected, for example, via a bidirectional interface **10** to each other. Resultantly, a video signal of high picture quality and other information items and signals can be bidirectionally communicated therebetween. On the other hand, between a terminal **134** of the video processing apparatus **100** and a terminal **202** of the video display apparatus **200**, signals from the internet and a home network are communicated by radio. The frequency bands used for the transmission between the terminals **134** and **202** are limited to predetermined frequency bands. This increases the radio wave resource efficiency and prevents the problem of interference with other apparatuses.

In the embodiment, the portable video processing apparatus **100** is specifically, for example, a digital camera, a video camera, a cellular phone, a game machine, or a personal media player.

FIG. **1** shows a concrete example of the video processing apparatus **100** employed in the first embodiment of the present invention. This is a specific configuration of the apparatus **100** shown in FIG. **10**. In FIG. **1**, an imaging device **110** receives a moving or still picture supplied via an optical system to convert the picture into en electric signal. To transmit a moving picture, a compression circuit **111** employs a compression method, e.g., Moving Picture Experts Group 2 (MPEG2), MPEG4, or AVC/H.264. To transmit a still picture, the compression circuit **111** employs a compression method, e.g., Joint Photographic Experts Group (JPEG). The compression circuit **111** efficiently bit-compresses the received image.

A microphone **112** converts sound into an electric signal. A compression circuit **113** uses a compression method such as an MPEG audio to efficiently bit-compress the received audio signal.

A multiplexer circuit **116** receives the bit-compressed video and audio signals from the compression circuits **111** and **113** and various information items from a microprocessor **115**. By use of the information items, the multiplexer **116** multiplexes the signals according to a predetermined format. When a still picture is shot, the audio signal is not obtained in an ordinary case. However, it is also possible to multiplex an audio signal in synchronism with the still picture shooting operation.

The information items from the microprocessor **115** include, for example, positional information (horizontal positions, vertical positions on the right, and vertical positions on the left), date, and exposure information at shooting.

In FIG. **1**, the multiplexed signal from the multiplexer **116** is fed via an encryption/decryption circuit **140** to be stored in a storage **130**. The storage **130** may be, for example, a hard disk device, an optical disk device, or a semiconductor memory device. The type of the storage **130** may be determined according to, for example, a storage capacity, a size of the storage **130**, easiness of removing a storage medium, and/or a price of the storage **130** according to necessity. It is also possible to store the multiplexed signal via a signal processing circuit **124** and a memory interface **120** in a memory **121**.

When information is shot by a particular person, copyright of the information belongs to the person. Hence, ordinarily, such information is not required to be encrypted for the storage thereof. However, the storage medium having stored information by the storage **130** may be lost. It will be more safe if the multiplexed signal from the multiplexer **116** is once encrypted by the encryption/decryption circuit **140** to be stored in the storage **130** or the memory **121**.

The video processing apparatus **100** may also support the use of a removable memory or include a cellular phone function or a radio Local Area Network (LAN) function. The memory interface **120** is an interface for a removable memory **121**. When video and audio contents of still and moving pictures are recorded by another apparatus in the memory **121** and the memory **121** is connected to the interface **120**, the contents can be recorded via the signal processing circuit **124** and the encryption/decryption circuit **140** into the storage **130**.

In this situation, the signal processing circuit **124** checks to determine whether or not the copyright of the contents recorded in the memory **121** is protected and whether or not the duplication thereof is prohibited. According to the detected condition, the encryption/decryption circuit **140** encrypts the contents and moves the encrypted contents in the storage **130**.

Similarly, audio and video contents of still and moving pictures are received as inputs by a radio interface **122**. The contents are stored via the signal processing circuit **124** and the encryption/decryption circuit **140** in the storage **130**. Also, according to conditions of the copyright protection and the replication restriction, the contents are encrypted by the encryption/decryption circuit **140**, as required.

When it is desired to reproduce a content stored in the storage **130** to view the reproduced content, the user selects the content by an input key or a remote control, not shown. The selected content is read from the storage **130** to be decoded by the encryption/decryption circuit **140** and is then separated by a demultiplexer circuit **141** into an audio signal and a video signal.

When a broadcast program is received by a broadcast receiver **180**, the encrypted signal encrypted for the broadcast is decrypted by the encryption/decryption circuit **140**. If encryption is required to store the signal, the signal is accordingly encrypted by the circuit **140** to be stored in the storage **130** and the memory **121**. To immediately view the received broadcast program in real time, the signal is separated by the demultiplexer **141** into a video signal and an audio signal.

The separated and compressed video signal is decompressed by a decompression circuit **142** to be fed to a signal processing circuit **150**. The circuit **150** conducts a scanning-line conversion for the video signal on the basis of the number of scanning lines of a display **160** to output the resultant video signal to the display **160**. The separated and compressed audio signal is decompressed by a decompression circuit **143** to be delivered to an audio output device **161**. Since the video processing apparatus **100** includes the display **160** and the audio output device **161**, it is possible to immediately view the broadcast program without externally connecting any video display apparatus. In a situation wherein the period of time required for the decompression varies between the video and audio signals and/or a time difference exists between the video display and the audio output due to presence or absence of the scanning-line conversion, if the audio signal is advanced in time relative to the video signal, the user particularly perceives an uncomfortable feeling. To overcome the difficulty, the audio signal is delayed, for example, in the decompression processing, namely, a lip-sync operation is carried out. This removes the uncomfortable feeling due to the difference in time between the video and audio signals.

Description will now be given of a situation wherein the video processing apparatus **100** is employed as a cellular phone. For example, a voice of a conversation is inputted to the audio input/output section **126** to produce an electric signal. For the signal, a telephone signal processing circuit **125** executes predetermined signal processing and modulation processing. The resultant signal is transmitted via an antenna, not shown, to a base station of the cellular phone. An audio signal sent from the base station is received by an antenna, not shown, to be fed to the telephone signal processing circuit **125**. For the signal, the circuit **125** executes predetermined signal processing and demodulation processing. The resultant signal is fed to the audio I/O section **126** to be reproduced as a voice. The video processing apparatus **100** can also receive a content of a moving picture transmitted from the base station of the cellular phone. The content is received by an antenna, not shown, to be delivered via the telephone signal processing circuit **125** to the signal processing circuit **124**. The content is similarly processed as above by the encryption/decryption circuit **140**. The resultant signal of the content is fed to a display and an audio output unit incorporated in the video processing apparatus **100** to be viewed/listened by the user. The content thus processed may also be fed via a terminal **101**, a connection cable **10**, and a terminal **201** to an external video display apparatus **200** to be displayed on a large-sized screen. While viewing the content, it is possible to record the content in a recording medium incorporated in the video processing apparatus **100** or a recording medium, e.g., a memory **121** connected thereto, for example, to view the content later. The memory **121** may also be used as a recording medium to record a movie and the like.

Similarly, a program broadcast from a broadcast transmission tower is received by a broadcast receiver **180** of the video processing apparatus **100** to be viewed by the apparatus **100** or to be stored in a recording medium, not shown, incorporated in the apparatus **100** or a recording medium, e.g., the memory **121** connected thereto. Also, the content may be fed via the terminal **101**, the cable **10**, and the terminal **201** to the video display apparatus **200** to be viewed by the user.

In addition, by installing an imaging device **110** and a microphone **112** in the video processing apparatus **100**, still and moving pictures can be shot together with audios and can be stored in an incorporated recording medium, not shown, and/or the memory **121**. The videos and audios stored in the recording medium and/or the memory **121** may be fed via the terminal **101** to the video display apparatus **200** to be enjoyed by the user.

When the user views video and audio signals by use of the external video display apparatus **200**, the apparatus **200** confirms scanning lines which the apparatus **200** can support. If the scanning lines match those of the video signals to be displayed, the signals are immediately outputted in real time. Otherwise, the scanning lines of the video signals are converted by a signal processing circuit **150** into the required scanning lines to be fed to a multiplexer circuit **170**. In the circuit **170**, the video signals are multiplexed on the time axis, with the audio signals processed by a signal processing circuit **151**. The circuit **151** compresses the audio signals on the time axis during a period corresponding to the blanking period of the video signals and conducts a time adjusting operation to carry out the lip-sync operation according to the necessity. The video and audio signals multiplexed by the multiplexer circuit **170** are delivered to an encryption circuit **171**. For the signals, the circuit **171** carries out encryption for the transmission of the signals between the video processing apparatus **100** and the video display apparatus **200** and outputs the resultant signals via a video interface circuit **131**, a transmission rate assignment controller **1001**, and the terminal **101** to the video display apparatus **200**. On the other hand, the terminal **134** is connected to a network such as the internet as described above and is used to wirelessly communicate videos and other information items obtained from the network by use of a radio modem circuit **1003**. The information from the network is demodulated by the circuit **1003** to be fed via the transmission rate assignment controller **1001** to an interface circuit **133** and is delivered therefrom to a microprocessor **115**. The microprocessor **115** determines the type of the information from the network. If the information is, for example, a video stream compressed in a predetermined format, the microprocessor **115** feeds the video stream to the demultiplexer circuit **141** and the decompression circuit **143**. For the video stream, the circuits **141** and **143** conduct processing as described above. The resultant signals are presented on the display **160**. According to necessity, the audio information obtained from the network is reproduced by the audio output device **161**. If the information from the network is an update program of an application program or an Operating System (OS), the microprocessor **115** executes addition and storage processing for new software or executes update processing for the associated program. Although the processing of the network information is executed by the microprocessor **115** to process video information in the embodiment, it is also possible to arrange a microprocessor to dedicatedly process the network information.

The controller **132** controls the transmission rate assignment control circuit **1001** on the basis of time control information of the video signal to variably control the transmission rate of the radio modem circuit **1002**. At the

same time, the controller **132** variably controls the transmission rate of the radio modem circuit **1003** for radio communication with a network such as the Internet. According to the embodiment, in the assignment of the transmission rate to the demodulation circuits **1002** and **1003**, the controller **132** gives preference to the demodulation circuit **1002**. In other words, the transmission rate of the demodulation circuit **1002** is more than that of the modem circuit **1003**. Hence, within the limited range of bands for the radio transmission, the modem **1002** can transmit video information without deteriorating the video quality of the video information having high picture quality. The band of radio signals from the terminal **101** and that of radio signals from the terminal **134** are fixed. Therefore, if the band of signals from the terminal **101** is expanded, that of signals from the terminal **134** narrows to slightly lower the communication speed of the network. However, this rarely influences the system operation since information regarding the network is less frequently exchanged as compared with video information sent from the video processing apparatus **100**.

When the signal from the terminal **101** is to be stored in the destination thereof, the compressed signal is transmitted without decompressing the signal. In the operation, the encryption/decryption circuit **140** delivers the compressed signal to the encryption circuit **171**. The circuit **171** conducts predetermined encryption for the signal and then outputs the resultant signal via the video interface circuit **131**, the transmission rate assignment controller **1001**, and the terminal **101**. Also in this situation, the control circuit **132** variably controls the transmission rate of the radio modem **1002** in association with the time control information of the video signal. As a result, the radio modem **1002** can send the video information without deteriorating the video quality of the video information having high picture quality.

In the description above, the video and audio signals obtained from the imaging device **110** and the microphone **112** and the contents inputted from the memory **121** and the radio interface **122** are once stored in the storage **130** to be thereafter reproduced. However, if the storing of the signals and the contents are not required or are immediately viewed, the signals and the contents are demultiplexed by the demultiplexer **141** without conducting the encryption and decryption for the storage by the encryption/decryption circuit **140**. Resultantly, the videos and audios can be enjoyed by use of the display **160** and the audio output device **161** of the video processing apparatus **100**. Also, it is possible to enjoy the videos and audios by a receiver externally connected via the wired interface circuit **131** to the apparatus **100**.

Description will now be specifically given of one technical aspect of the embodiment, namely, the transmission rate assignment control circuit **1001** and the radio demodulation circuits **1002** and **1003**. The modem circuits **1002** and **1003** conduct demodulation through Orthogonal Frequency Division Multiplexing (OFDM). In the example, the modem **1002** is a first radio communication unit which wirelessly sends video information and audio information to the external video display apparatus **200** and which receives data and information by radio therefrom. The modem **1002** is connected via the transmission rate assignment controller **1001** to the interface circuit **131** which communicates with the video display apparatus **200**. On the other hand, the modem **1003** is a second radio communication unit which connects to (accesses) a network, e.g., the Internet or a home network to wirelessly communicate various information including video signals, audio signals, and data therewith. The modem **1003** is connected via the transmission rate assignment controller **1001** to the interface circuit **133** for networks. The controller **1001** variably controls, according to a control signal from the controller **132**, the transmission rates respectively of the modems **1002** and **1003** by variably setting the modulation/demodulation methods, the frequency bands, and the number of carriers respectively for the modems **1002** and **1003**. In short, the controller **132** controls distribution of the radio transmission rate of each modem by controlling the transmission rate assignment controller **1001**. As a specific example of operation in which the transmission rate is controlled by changing parameters including the demodulation method and the frequency band, FIG. **9** shows the difference in the transmission rate between two schemes.

According to the embodiment, the controller **132** and the transmission rate assignment controller **1001** control the radio transmission assignment such that the radio transmission rate of the modem **1002** to send the video information of high picture quality by radio to the video display apparatus **200** takes precedence over the radio transmission rate of the modem **1003** to connect to a network for communication. That is, the radio transmission rate of the modem **1002** is more than that of the modem **1003**. For example, in a situation wherein the modem **1002** transmits video information to the display apparatus **200** and the modem **1003** simultaneously connects to the Internet to receive Internet information, the controller **132** controls the operation to continuously supply videos with high picture quality to the user, specifically, to set the transmission scheme of the modem **1002** to, for example, "scheme **1**" shown in FIG. **9**. For the radio modem **1003**, the controller **132** sets the transmission scheme thereof to "scheme **2**" of FIG. **9**. As can be seen from FIG. **9**, the transmission capacity of scheme **1** is 17 Megabits per second (Mbps) which is more than three times that of scheme **2** (5 Mbps). As above, in the limited transmission capacity for radio transmission, a higher transmission rate is assigned to the communication with the display apparatus **200** in the embodiment. It is hence possible that the user continuously views videos with high picture quality on the display apparatus **100**. Naturally, the variable control of the transmission rate is not limited to the example shown in FIG. **9**.

The controller **132** and the transmission rate assignment controller **1001** may variably control the radio transmission assignment to the modems **1002** and **1003** in response to an indication from the user. For example, in a situation wherein the user issues an indication to transmit video information by radio via the modem **1002** to the display apparatus **200** while acquiring information from the Internet according to scheme **1** of FIG. **9** by use of the modem **1003**, the controller **132** outputs a control signal to the assignment controller **1001** such that the transmission scheme of the modem **1003** is changed from scheme **1** to scheme **2** of FIG. **9** and that of the modem **1002** is set to scheme **1** of FIG. **9** conduct communications. The transmission rate of the modem **1002** may be variably changed according to fineness or precision of the video information sent from the modem **1002** to the display apparatus **200**. For example, if the fineness of the video information is altered from SD (640×480) to HD (1980×1080), the controller **132** instructs the assignment controller **1001** to heighten the transmission rate of the modem circuit **1002**. It is preferable in the operation that the transmission rate of the modem **1003** is lowered in association with the variable control of the transmission rate of the modem **1002**.

The transmission rates of the radio modems **1002** and **1003** may also be variably controlled by a communication technique using a plurality of antennas such as a Multi-Input Multi-Output (MIMO) scheme.

Referring next to FIG. **4**, description will be given of other examples of the transmission rate assignment controller and the radio modem. FIG. **4** shows only part of the system associated with the transmission rate assignment control. In FIG. **4**, the same functional constituent components as those of FIG. **1** are assigned with the same reference numerals.

In FIG. **4**, radio modem circuits **5001** to **5004** are modems having respective fixed transmission capacity values and differ from each other only in the frequency band for transmission. The modems **5001** to **5004** respectively have bands A to D as shown in FIG. **11**. Terminals **101** and **5005** to **5007** are input terminals to receive signals and are arranged respectively for radio modems **5001** to **5004**. In operation, the modems **5001** to **5004** may be appropriately combined with each other. For example, according to necessity, the modems **5001** and **5002** are employed to transmit video information and the modems **5003** and **5004** are utilized to communicate with the network such as the Internet. That is, while the interface circuit **131** wirelessly transmits video information and audio information via the modems **5001** and **5002** to the video display apparatus **200**, the interface circuit **133** conducts communication via the modems **5003** and **5004** with the network. In a situation wherein a wide band is required to transmit video information of high picture quality (e.g., video information of HD resolution), the modems **5001** to **5003** are assigned to send video information and only the modem **5004** is assigned to communicate with the network such as the Internet. Specifically, the interface circuit **131** transmits video and audio information by radio via the modems **5001** to **5003** to the display apparatus **200**, and the interface circuit **133** communicates with the network via the modem **5004**. As a result, video information of high picture quality can be continuously transmitted and it is also possible to communicate with the Internet. Particularly, the broadcast signal is required to be presented by synchronizing the time information sent from the broadcasting station with that on the receiver side. According to the present invention, the time information can be appropriately controlled without deteriorating the quality of the video information.

FIG. **2** shows a specific configuration of the video display apparatus **200** of FIG. **10**. In FIGS. **2** and **10**, the same constituent components are assigned with the same reference numerals and detailed description thereof will be avoided. Description will be given of a situation wherein an uncompressed baseband signal of a moving picture is inputted via the terminal **201**. The signal from the external video processing apparatus **100** thus received via the terminal **201** is demodulated by a radio modem circuit **2015** to be supplied via a transmission rate assignment controller **2017** and an input/output interface circuit **2011** to a decryption circuit **211**. In operation, a controller **2013** drives the assignment controller **2017** to vary the transmission rate of the modem **2015** according to that of the video information delivered from the video processing apparatus **100**. Resultantly, an input/output interface circuit **2011** can receive the video information of high picture quality at preset timing.

The decryption circuit **211** is associated with encryption by the encryption circuit **171** shown in FIG. **1** and decrypts a signal encrypted by the circuit **171**. The decrypted signal is fed to a demultiplexer circuit **250**, and then video and audio signals obtained from the demultiplexer **250** are inputted to signal processing circuits **251** and **252**, respectively. For the received video signal, the circuit **251** conducts a scanning-line conversion and a resolution conversion according to the number of pixels displayable by a display **260**. The circuit **252** decompresses on the time axis the audio signal which is compressed and multiplexed on the time axis by use of the blanking of the video signal. According to necessity, the circuit **252** carries out the lip-sync operation and the sound quality adjustment. Signals outputted respectively from the circuits **251** and **252** are inputted respectively to a display **260** and an audio input/output unit **270** to be viewed by the user.

Description will now be given of operation when a compressed moving-picture signal is received via the terminal **201**. This operation aims at storing the moving-picture signal in a storage **230** incorporated in the apparatus **200**.

The signal received from the terminal **201** is delivered via the wired input/output interface circuit **2011** to the decryption circuit **211**. The circuit **211** corresponds to the encryption circuit **171** shown in FIG. **2** and decrypts a signal encrypted by the circuit **171**. The decrypted signal is inputted to an encryption/decryption circuit **240**. The circuit **240** reads copy control information of the content to be stored and encrypts the content for the storage thereof according to the information. The encrypted signal is stored in the storage **230** in the compressed state.

In a situation wherein the user views the compressed signal received via the terminal **201** while storing the signal in the storage, a signal corresponding to a compressed signal decrypted by the encryption/decryption circuit **211** is fed from the encryption/decryption circuit **240** to a demultiplexer circuit **241**. In the circuit **241**, the signal is separated into a compressed video signal and a compressed audio signal. The separated video and audio signals are decompressed respectively by decompression circuits **242** and **243** to baseband signals to be respectively supplied to the signal processing circuits **251** and **252**. Signals outputted respectively therefrom are delivered respectively to the display and the audio output unit **270** to be viewed by the user.

When a content stored in the storage **230** is reproduced to be viewed by the user, information items such as titles of the contents stored in the storage **230** are presented on the display **260**. When the user selects one of the contents, a signal of the selected content is fed from the storage **230** to the encryption/decryption circuit **240**. The circuit **240** decrypts the encrypted signal of the content to input the resultant signal to the demultiplexer **241**. The signal of the content is thereafter similarly processed as described above to be viewed by the user.

It is possible to similarly reproduce contents stored in a memory **221**. As in the reproduction of contents stored in the storage **230**, the user selects one of the contents stored in a memory **221** to view the content. The selected content is transferred via a memory interface **220** and a signal processing circuit **224** to the encryption/decryption circuit **240**. Specifically, the circuit **224** executes processing necessary to read the content from the memory **221** to input compressed and multiplexed video and audio signals of the content to the circuit **240**. Subsequent signal processing is similar to the processing executed after the content is read from the storage **230**.

As in the operation to store a content in the storage **230**, it is possible to store the content in the memory **221**. Although detailed description of the associated processing will be avoided, the content encrypted by the encryption/decryption circuit **240** is stored via the signal processing circuit **224** and the memory interface **220** into the memory **221**.

To view or to store a content transmitted by radio, the system executes processing in a similar way. A compressed content received by radio is fed via a radio interface **222** and the signal processing circuit **224** to the encryption/decryp-

tion circuit **240**. The circuit **240** decrypts the signal encrypted for the radio transmission. Subsequent processing is similar to the processing executed at reproduction of the signal from the storage **230**.

When an uncompressed baseband signal is received from the terminal **201** or **202**, the content can be efficiently stored in the storage **230** and the memory **221**. Description will be given of operation in this situation.

The content inputted from the terminal **201** is transferred via the input/output interface **2011**, the decryption circuit **211** and the demultiplexer circuit **250** to be separated into a video signal and an audio signal. The video and audio signals thus separated are fed via a replication control circuit **280** to compression circuits **281** and **282**. The circuit **280** reads, from the content, multiplexed replication control information to determine whether or not replication of the content is allowed. As the control information, a bit may be assigned to a designated field. Or, by using electronic watermark, the information may be superimposed onto video or audio information. Information inputted from the network to the terminal **202** is also processed in a similar fashion as above.

The compression circuit **281** compresses the video signal by use of a compression scheme, e.g., MPEG2, MPEG4, or AVC/H.264. The compression circuit **282** compresses the audio signal according to a compression scheme, e.g., MPEG Audio. The compressed video and audio signals are inputted to a multiplexer circuit **283** to be multiplexed. The multiplexed signal is fed to the encryption/decryption circuit **240** to be thereafter similarly stored in the storage **230** and/or the memory **221**. As a result, the content can be efficiently recorded therein for a long period of time according to copyright information.

On the other hand, the signal from a network such as the Internet received via the terminal **202** is demodulated by a radio modem circuit **2016** to be supplied via a transmission rate assignment controller circuit **2017** and an input/output interface circuit **2012** to a microprocessor **279**. The type of information of the video information from the network is determined. If the information is, for example, a video stream compressed in a predetermined format, the system transfers the information to demultiplexer circuit **241** and the decompression circuits **242** and **243**. After the information is processed by these circuits in a similar way as described above, an image of the information is presented on the display **260**. According to necessity, audio information obtained from the network is reproduced by the audio output unit **261**. If the information from the network is an update program for an application program, an operating system OS, or the like, the microprocessor **279** adds and stores new software and/or updates an associated program. It is also possible that the function of the microprocessor **279** is installed in the controller **2013** to configure one unified module including the microprocessor **279** and the controller **2013**.

In the operation, the controller **2013** controls the transmission rate assignment controller **2017** to vary the transmission rate of the radio modem **2015** in association with the transmission rate of the video information received from the video processing apparatus **100**. Since the transmission rate of the radio modem **2015** to receive the video information from the apparatus **100** takes precedence over that of the modem **2016** in the transmission rate assignment, the transmission rate of the modem **2016** is lower than that of the modem **2015**. In the embodiment as described above, the transmission rate of the modem **2015** to receive the video information from the apparatus **100** is higher than that of the modem **2016** to communicate with the network. Therefore, within the limited range of bands for the radio transmission, it is possible to obtain the high-quality video information from the external video processing apparatus **100** without deteriorating the video quality. The band of radio signals received by the terminal **201** and that of radio signals inputted to the terminal **202** are fixed. Hence, if the band of signals from the terminal **201** is expanded, that of signals from the terminal **202** narrows. This slightly lowers the communication speed of the network. However, this rarely influences the system operation since information regarding the network is less frequently exchanged as compared with video information sent from the video processing apparatus **100**.

Next, description will be specifically given of one technical aspect of the embodiment, namely, the transmission rate assignment controller **2017** and the radio modems **2015** and **2016**. The modems **2015** and **2016** carry out OFDM modulation/demodulation. In the example, the modem **2015** is a first radio communication unit which wirelessly receives video information and audio information from the external video processing apparatus **100** and which sends data and information by radio to the apparatus **100**. The modem **2015** is connected via the transmission rate assignment controller **2017** to the interface circuit **2011** which communicates with the video display apparatus **200**. On the other hand, the modem **2016** is a second radio communication unit which connects to (accesses) a network, e.g., the Internet or a home network to wirelessly communicate various information including video signals, audio signals, and data with the network. The modem **2016** is connected via the transmission rate assignment controller **2017** to the interface circuit **2012** for networks. The controller **2017** variably controls, according to a control signal from the controller **2013**, the transmission rates respectively of the modems **2015** and **2016** by variably designating the modulation/demodulation methods, the frequency bands, and the number of carriers respectively for the modems **2015** and **2016**. In other words, the controller **2013** controls distribution of the radio transmission rate of each modem by controlling the transmission rate assignment controller **2017**. As a specific example of operation in which the transmission rate is controlled by changing parameters including the demodulation method and the frequency band, FIG. **9** shows the difference in the transmission rate between two schemes.

In the embodiment, the controller **2013** and the transmission rate assignment controller **2017** control the radio transmission rate assignment so that the radio transmission rate of the modem **2015** to receive the video information of high picture quality by radio from the external video processing apparatus **100** takes precedence over the radio transmission rate of the modem **2016** to connect to a network for communication. In short, the radio transmission rate of the modem **2015** is more than that of the modem **2016**. For example, in a situation wherein the modem **2015** receives video information from the video processing apparatus **100** and the modem **2016** simultaneously connects to the Internet to receive Internet information, the controller **2013** controls the operation to continuously provide videos with high picture quality to the user, specifically, to set the transmission scheme of the modem **2015** to, for example, "scheme **1**" shown in FIG. **9**. For the radio modem **2016**, the controller **2013** sets the transmission scheme thereof to "scheme **2**" shown in FIG. **9**. As can be seen from FIG. **9**, the transmission capacity of scheme **1** is 17 Mbps which is more than three times that of scheme **2** (5 Mbps). Hence, in the limited transmission capacity for radio transmission, a higher trans-

mission rate is assigned to the communication with the video processing apparatus **100** in the embodiment. It is therefore possible that the user continuously watches videos with high picture quality on the display apparatus **100**. Naturally, the variable control of the transmission rate is not limited to the example shown in FIG. **9**.

The controller **2013** and the transmission rate assignment controller **2017** may control the radio transmission assignment to the modems **2015** and **2016** in response to an indication from the user. For example, in a situation wherein the user issues an indication to receive video information by radio via the modem **2015** from the video processing apparatus **100** while acquiring information from the Internet according to scheme **1** of FIG. **9** by use of the modem **2016**, the controller **2013** outputs a control signal to the assignment controller **2017** such that the transmission scheme of the modem **2016** is changed from scheme **1** to scheme **2** of FIG. **9** and that of the modem **2015** is set to scheme **1** of FIG. **9**. The transmission rate of the modem **2015** may be changed according to precision of the video information which is sent from the video processing apparatus **100** to be received by the modem **2015**. For example, the precision of the video information above is changed from SD (640×480) to HD (1980×1080), the controller **2013** instructs the assignment controller **2017** to heighten the transmission rate of the modem circuit **2015**. It is preferable in the operation that the transmission rate of the modem **2016** is lowered in association with the variable control of the transmission rate of the modem **2015**.

The transmission rates of the radio modems **2015** and **2016** may also be variably controlled by a communication technique using a plurality of antennas such as the MIMO scheme.

Referring next to FIG. **8**, description will be given of other examples of the transmission rate assignment controller and the radio modem. FIG. **8** shows only part of the system associated with the transmission rate assignment control. In FIG. **8**, the same functional constituent components as those of FIG. **1** are assigned with the same reference numerals.

In FIG. **8**, a transmission rate assignment controller **9005** operates in a similar way as the transmission rate assignment controller **1001** described above and assigns transmission rates respectively to radio modems **9010** to **9013** according to an instruction from the controller **2013**. The modem circuits **9010** to **9013** are modems having respective fixed transmission capacity values and differ from each other only in the frequency band for transmission. The modems **9010** to **9013** respectively have bands A to D as shown in FIG. **11**. Terminals **9006** and **9007** are input terminals to receive signals and are arranged respectively for radio modems **9010** to **9013**. In operation, the modems **9010** to **9013** may be appropriately combined with each other. For example, under supervision of the assignment controller **9005**, the modems **9010** and **9011** are employed to transmit video information and the modems **9012** and **9013** are utilized for communication with the network such as the Internet depending on cases. That is, while the interface circuit **2011** transmits by radio video information and audio information via the modems **9010** and **9011** to the video display apparatus **200**, the interface circuit **2012** communicates via the modems **9012** and **9013** with the network. In a situation wherein a wide band is required to receive video information of high picture quality (e.g., video information of HD resolution) from the video processing apparatus **100**, the modems **9010** to **9012** are allocated to transmit video information and only the modem **9013** is allocated to communicate with the network such as the Internet. That is, the interface circuit **2011** transmits video and audio information by radio via the modems **9010** to **9012** to the video display apparatus **200**, and the interface circuit **2012** communicates with the network via the modem **9013**. Resultantly, video information of high picture quality can be continuously transmitted and it is also possible to communicate with the Internet. In particular, the broadcast signal is required to be presented by synchronizing the time information sent from the broadcasting station with that on the receiver side. According to the embodiment, the time information can be appropriately controlled without deteriorating the quality of the video information.

Description will now be given supplementally of the High Definition Digital Multimedia Interface (HDMI). FIG. **7** shows an example the HDMI configuration mainly including a transmission side and a reception side. The transmission side includes a transmitter section **1601** and a transmission controller section **1603** to control the transmitter section **1601**. The transmitter section **1601** encodes a video signal (Y, Pb, Pr) and an audio signal to output resultant signals to a receiver section **1604**. Also, the transmitter section **1601** includes a TMDS encoder circuit **1602** which converts the video signal (Y, Pb, Pr) and the audio signal respectively into serial video data and serial audio data. On the other hand, the reception side includes a receiver section **1604** and a reception controller section **1606** to control the receiver section **1604**. The receiver section **1604** receives the video data and the audio data from the transmitter section **1601** and conducts a TMDS decoding operation for the data by a TMDS decoder circuit **1605** to thereby reproduce baseband video data and baseband audio data. A CEC line **1607** is an apparatus control line to transmit a control signal for apparatuses. Display specification information known as "DDC" is transmitted via a DDC line **1608**. The reception side transmits to the transmission side a Hot Plug Detect (HPD) signal **1609** indicating that a connection is established between apparatuses of the transmission and reception sides.

To conduct transmission according to the HDMI standard, apparatuses mutually recognize in a procedure as follows. A physical address is obtained via the DDC line. The physical address is an identification number to discriminate an associated apparatus. By use of a CEC bus for bidirectional connection, a logical address is obtained for bidirectional communication of each apparatus. The logical address is identification information defining a category of each apparatus, e.g., a display or a recording apparatus.

FIG. **5** is a diagram to supplementally explain a radio interface **11** between the video processing apparatus **100** and the video display apparatus **200**. In FIG. **5**, the apparatuses **100** and **200** are almost the same as those described in conjunction with, for example, FIG. **1**. To simplify explanation, for the constituent components of the apparatus **100**, only the radio interface circuit **133** is shown in FIG. **8** and the other constituent components are not shown. For the constituent components of the display apparatus **200**, only the radio input/output interface circuit **2012** is shown and the other constituent components are not shown. The interface circuits **133** and **2012** are bidirectional interfaces.

In FIG. **5**, a channel between antennas **81** and **84** and a channel between antennas **82** and **85** are channels to bidirectionally transmit a video signal, an audio signal, and control signals indicating copyright protection and a replication restriction condition of contents. On the other hand, a channel between antennas **83** and **86** is disposed to transmit an inter-apparatus control signal. Bit selection circuits **811** and **812** receive the video signal, the audio signal, the control signals indicating copyright protection

and a replication restriction condition of contents, and the inter-apparatus control signal. In the demodulation, the QPSK demodulation scheme is more resistive against transmission errors as compared with the 64QAM demodulation scheme. For the transmission efficiency, the 64QAM demodulation scheme is superior to the QPSK demodulation scheme. Description will now be given of a situation wherein a video signal, an audio signal, and control signals indicating copyright protection and a replication restriction condition of contents are fed from the video processing apparatus **100** to the video display apparatus **200**. Assume in the operation that the transmission direction from the apparatus **100** to the apparatus **200** is an uplink direction and the transmission direction from the apparatus **200** to the apparatus **100** is an downlink direction.

To transmit information, the video processing apparatus **100** determines, by a carrier detector circuit, not shown, a state of an associated transmission path, i.e., whether or not the channel is reserved for another apparatus. In the carrier detection, a check is made to determine whether or not a carrier is detected in a predetermined frequency band for a predetermined period of time. If it is detected by the detector that the channel is occupied by another apparatus, the check is again carried out after a lapse of a predetermined period of time to determine whether or not an available channel is present. If such available channel is present, the condition is notified to the microprocessor **115** of the video processing apparatus **100**. The microprocessor **115** outputs from a QPSK modem circuit **803** a channel use request signal as an inter-apparatus control signal to secure the channel use right. Thereafter, the microprocessor **115** sends a transmission request signal to a bit selection circuit **811**. An error control circuit **843** adds an error control bit for error detection and correction to the transmission request signal and then transfers the signal to the QPSK modem **803**. The modem **803** conducts a QPSK modulation for the signal to resultantly transmit a radio signal via the antenna **83** to the display apparatus **200**. The apparatus **200** then receives the radio signal by the antenna **86**, carries out a QPSK demodulation for the signal by a QPSK modem **806**, conducts error detection and correction control for the demodulated signal by an error control circuit **847** to produce an inter-apparatus control signal, and delivers the signal to the bit selection circuit **812**.

The microprocessor in the video display apparatus **200** decodes the inter-apparatus control signal and receives the transmission request signal from the video processing apparatus **100** together with apparatus category information regarding the apparatus **100** (information to identify a category indicating whether the associated apparatus is a display apparatus or a recording apparatus) and an apparatus identification number of the apparatus **100**. An image to urge the user to determine whether or not a connection is established to the video processing apparatus **100** is presented on a display screen of the display apparatus **200**. In response thereto, the user indicates allowance for the connection by using an input device such as a remote controller of the display apparatus **200**. Thereafter, between the apparatuses **100** and **200**, the apparatus category information and the identification number to identify each of the apparatuses are communicated to exchange information to observe the copyright protection and the replication restriction condition of the content. If there does not exist any problem, it is allowed that the apparatuses **100** and **200** are connected to each other. In a situation wherein the connection is meaningless, for example, each of the apparatuses **100** and **200** is an input or output dedicated unit or the copyright protection or the replication restriction condition of the content is not observed, the connecting operation is interrupted and an indication of the condition is displayed on the apparatuses **100** and **200**. Description will now be given of a situation wherein the copyright protection and the replication restriction condition of the content are observed.

By using the video signal, the audio signal, and the control signal indicating the copyright protection and the replication restriction condition of the contents associated with the video and audio signals which are inputted to an interface circuit **172**, two bits are selected from the Most-Significant Byte (MSB) of the video signal so that error detection and correction control bits are added thereto by an error control circuit **841** and the resultant signal is fed to a QPSK modem circuit **801**. The modem circuit **801** conducts a QPSK modulation for the signal and then transmits an associated radio signal from the antenna **81**. To the remaining third to eighth bits, an error control circuit **842** adds error detection and correction control bits to send the resultant signal to a 64QAM modem circuit **802**. The modem **802** carries out a 64QAM modulation for the signal and resultantly transmits a radio signal from the antenna **82**.

In the video display apparatus **200**, a QPSK modem circuit **804** conducts a QPSK demodulation for the signal received via the antenna **84** and an error control circuit **845** carries out error control for the resultant signal to output two high-order bits of the video signal to the bit control circuit **812**. For the remaining signals received via the antenna **85**, a 64QAM modem circuit **805** conducts a 64QAM demodulation. For the resultant signal, an error control circuit **846** carries out error control to output the obtained signal to the bit control circuit **812**.

Description will now be given of the inter-apparatus control signal. When an inter-apparatus control signal is sent in a downlink direction, i.e., from the video display apparatus **200** to the video processing apparatus **100**, the signal is fed from the bit selection circuit **812** via the error control circuit **847** to the QPSK modem circuit **806** to be demodulated. The demodulated signal is delivered from the antenna **86**. The video processing apparatus **100** receives the signal by the antenna **83** to send the signal to the QPSK modem circuit **803**. For the signal, the circuit **803** conducts a QPSK demodulation. For the demodulated signal, an error detection and correction is carried out by the error control circuit **843** to feed the resultant signal to the bit selection circuit **811**. Conversely, when an inter-apparatus control signal is transmitted in an uplink direction, i.e., from the video processing apparatus **100** to the video display apparatus **200**, the signal is fed from the bit selection circuit **811** via the error control circuit **843** to the QPSK modem circuit **803** to be modulated. The modulated signal is outputted from the antenna **83**. The display apparatus **200** receives the signal by the antenna **86**. For the signal, the modem **806** conducts a QPSK demodulation. For the demodulated signal, the error control circuit **847** conducts an error detection and correction to send the resultant signal to the bit selection circuit **812**. By virtue of the operation, there is obtained an advantage that for the inter-apparatus control signal which is important to construct the system, an erroneous operation is less frequently occurs even in a noisy environment.

In the configuration of the embodiment, for two high-order bits of the digital signal, there can be conducted the transmission highly resistive against noise with a relatively low transmission rate. That is, by using the fact that higher order bits of a video signal more strongly affect the picture quality, two bits are taken out from the video signal in order of MSB and a transmission path using the QPSK modulation

is allocated to the information of these two bits, to thereby preventing deterioration of the picture quality. In a system in which the audio information is more important than the video information, the transmission path using the QPSK modulation may be allocated to important bits, e.g., two high-order bits of the audio signal.

When a human perceives an image on a screen, a higher-frequency is less influential as compared with a lower-frequency component for the frequency component in the horizontal direction of the screen and that in the vertical direction thereof. For a moving object on the screen, it is likely that the human eyes cannot appropriately follow a high-speed movement of the object. By using these tendencies, it is also possible that in the horizontal direction of the screen, the signal is subdivided into a lower-frequency component and a higher-frequency component so that the QPSK modulation is used for the lower-frequency component and the 64QAM modulation is employed for the higher-frequency component. As a result, within the limited transmission bands, the noise resistivity can be increased for important information and the overall transmission capacity is secured. Similarly, it is possible that in the vertical direction of the screen, the signal is subdivided into a lower-frequency component and a higher-frequency component so that the QPSK modulation is used for the lower-frequency component and the 64QAM modulation is employed for the higher-frequency component. Resultantly, within the limited transmission bands, it is possible to heighten the noise resistivity for important information and the overall transmission capacity is secured. Additionally, by combining the operation for the frequency component in the horizontal direction of the screen with that for the frequency component in the vertical direction of the screen, the noise resistivity can be strengthened for desired important information.

In the description above, the error control circuits **841** to **843** add the error control information items to the bits inputted respectively thereto. However, it is also possible that the bits inputted to the circuits **841** to **843** are collectively treated as one word to add error control information to the word. This advantageously leads to a simplified configuration of the error control circuits.

Although detailed description has not been given of the encryption in the embodiment shown in FIG. **5**, it is possible to execute the processing as shown in FIG. **6** by combining the encryption circuit **171** with the interface circuit **172**. FIG. **6** shows an example of the configuration to carry out the encryption in the system of FIG. **5**. The system shown in FIG. **6** includes encryption/decryption circuits **821** to **826**, interface circuits **830** and **831** including encryption, and error control circuits **841** to **847**.

In the example of FIG. **6**, the bit selection circuit **811** selects predetermined bits as in the example shown in FIG. **5**. For the respective bits, the error control circuits **841** and **842** conduct error control. For the resultant signals, the encryption/decryption circuits **821** and **822** respectively carry out encryption. The obtained signals are inputted respectively to the QPSK modem circuit **801** and the 64QAM modem circuit **802** to be demodulated. The signals demodulated respectively by the circuits **801** and **802** are delivered to the encryption/decryption circuits **824** and **825** to be decrypted. The decrypted signals are fed to the bit selection circuit **812** and are therein bit-combined with each other. As a result, the signal processing can be executed according to importance of signals to possibly suppress errors in the processing of more important information. Hence, the signals of information can be efficiently transmitted without deteriorating the picture quality.

It is also possible to further increase transmission efficiency by combining lossless coding with the encryption/decryption circuits **821** to **826**. For example, in the example of FIG. **6**, before executing the encryption processing in the encryption/decryption circuits **821** to **823**, the number of bits to be transmitted is reduced, for example, by use of reversible arithmetic codes based on a statistic property. In the video display apparatus **200**, the received signals are decrypted by the encryption/decryption circuits **824** to **826**. Thereafter, the reversible codes corresponding to the circuits **821** to **823** are decoded to be fed to the error control circuits **845** to **846** for the error detection and correction thereof. The obtained signals are fed to the bit selection circuit **812** to be bit-combined with each other. Since the transmission rate of the information to be transmitted can be lowered by combining the reversible codes as above, the signal can be more efficiently transmitted.

Description will be supplementally given of the encryption. By using AES128 bit encryption in all encryption circuits for the encryption, it is possible to conduct the encryption with high safety for the protection of contents. Moreover, if the AES128 bit encryption is employed for the content encryption circuit **821** and the Data Encryption Standard (DES) encryption is used for the other encryption circuits, there can be easily constructed a system in which the protection of important contents and the processing efficiency are appropriately achieved.

It is also possible to construct a system in which a changeover operation is conducted between the baseband signal transmission and the compressed signal transmission in response to an inter-apparatus control signal. With the configuration, to transmit a compressed signal according to, for example, a content protection request, the error resistivity is enhanced on the transmission path by transmitting the signal using the QPSK modulation. To transmit the baseband signal, the transmission efficiency is increased by using the 64QAM modulation.

The operations of the video processing apparatus **100** and the video display apparatus **200** in FIG. **6** are basically similar to those of the apparatuses **100** and **200** shown in FIG. **5**. To transmit a signal, the video processing apparatus **100** determines the state of an associated transmission path, specifically, detects by a carrier detection circuit, not shown, whether or not the channel to be used is occupied by another apparatus. In the carrier detection, a check is made to determined whether or not a carrier is detected in a predetermined frequency band for a predetermined period of time. If it is detected by the detector that the channel is occupied by another apparatus, the check is again carried out after a lapse of a predetermined period of time to determine whether or not an available channel is present. If such available channel is present, the condition is notified to the microprocessor **115** of the video processing apparatus **100**. The microprocessor **115** outputs from the QPSK modem circuit **803** a channel use request signal as an inter-apparatus control signal to secure the channel use right. Thereafter, the microprocessor **115** sends a transmission request signal to a bit selection circuit **811**.

The error control circuit **843** adds error control bits for error detection and correction to the transmission request signal which is in turn encrypted by an encryption/decryption circuit **823** and then transferred to the QPSK modem **803**. The modem **803** conducts a QPSK modulation for the signal to resultantly transmit a radio signal via the antenna **83** to the display apparatus **200**. The apparatus **200** then

receives the radio signal by the antenna **86**, carries out a QPSK demodulation for the signal by the modem **806**, and decrypts the signal by the encryption/decryption circuit **826**. For the demodulated signal, the error control circuit **847** conducts error detection and correction control to produce an inter-apparatus control signal and delivers the signal to the bit selection circuit **812**. The microprocessor in the video display apparatus **200** decodes the inter-apparatus control signal and receives the transmission request signal from the video processing apparatus **100** together with apparatus category information regarding the apparatus **100** (information to identify a category indicating whether the associated apparatus is a display apparatus or a recording apparatus) and an apparatus identification number of the apparatus **100**. An image to urge the user to determine whether or not a connection is established to the video processing apparatus **100** is presented on a display screen of the display apparatus **200**. In response thereto, the user indicates allowance for the connection by use of an input device such as a remote control of the display apparatus **200**. Thereafter, between the apparatuses **100** and **200**, the apparatus category information and the identification number to identify each of the apparatuses are communicated to exchange information to observe the copyright protection and the replication restriction condition of the content. If there does not exist any problem, it is allowed that the apparatuses **100** and **200** are connected to each other. In a situation wherein the connection is meaningless, for example, each of the apparatuses **100** and **200** is an input or output dedicated unit or the copyright protection or the replication restriction condition of the content is not observed, the connecting operation is interrupted and the status is displayed on the apparatuses **100** and **200**. As above, in a situation wherein the copyright protection and the replication restriction condition of the content are observed, the connection is established to transmit video and audio signals from the video processing apparatus **100** to the video display apparatus **200**.

Second Embodiment

FIG. **3** shows a second embodiment of the present invention and is another configuration of the video display apparatus **200** shown in FIG. **1**. The configuration of FIG. **3** is partially equal to that of FIG. **2**. The same constituent components are assigned with the same reference numerals, and detailed description thereof will be avoided. The apparatus **200** of FIG. **3** includes a decryption circuit **212**, encryption/decryption circuits **245** and **290**, compression/transcoding circuits **291** and **292**, and copy control circuit **293** which is a multiplexing circuit.

In the embodiment of FIG. **3**, when a baseband signal is inputted via the terminal **201** or **202**, the system operates in almost the same way as for the embodiment shown in FIG. **2**. Each of the compression/transcoding circuits **291** and **292** operates as a compression circuit for the baseband signal. When a compressed signal is inputted from the terminal **201** or **202**, the signal is fed via the input/output interface **210** to the encryption/decryption circuit **212** to be decrypted. The signal is then delivered to the demultiplexer circuit **250** to be separated into a compressed video signal and a compressed audio signal. These signals are inputted to the replication control circuit **290**, which determines allowance or rejection of replication of the signals based on information indicating a replication restriction condition. If the replication is allowed, the bit rates of the compressed video and audio signals are lowered by the compression/transcoding circuits **291** and **292** by using, for example, a compression method having high compression efficiency according to necessity. Output signals from the circuits **291** and **292** are multiplexed by the multiplexer circuit **293** to be inputted to the encryption/decryption circuit **245**. In this situation, if the replication is allowed by the replication control circuit **290**, the circuit **245** encrypts the input signal for the storage thereof to store the encrypted signals in the storage **230** and/or the memory **221**. To reproduce the stored signal, the circuit **245** decrypts the signal read from the storage **230** or the memory **221**, and the decrypted signal is separated by the demultiplexer circuit **241** into a video signal and an audio signal. Thereafter, these signals are processed in almost the same way as described above and the user resultantly enjoys the image and the sound. In a situation wherein the user enjoys the image and the sound while storing the signal in the storage **230** or the memory **221**, the signal from the multiplexer **293** is delivered via the encryption/decryption circuit **245** to the demultiplexer **241** to be processed almost in the same way as above. In this case, it is possible to confirm the picture quality of the transcoded signal. To enjoy the image and the sound without storing the signal, the signal is fed from the decryption circuit **212** via the circuit **245** to the demultiplexer **241** to be separated into a video signal and an audio signal. Thereafter, the signals are processed in substantially the same way as described above.

According to the embodiment of FIG. **3**, also in a situation wherein a compressed signal is inputted thereto, by conducting the transcoding for the signal, the signal can be efficiently stored with a high compression ratio. Although the signal processing is carried out by use of circuits such as the compression circuits **111** and **113** in the embodiment, the circuits may be implemented by software means. In this situation, there can also be obtained similar advantages. According to the present invention, the signal processing may be accomplished in any appropriate fashion, that is, the present invention does not particularly limit how to implement the signal processing.

It should be further understood by those skilled in the art that although the foregoing description has been made on embodiments of the invention, the invention is not limited thereto and various changes and modifications may be made without departing from the spirit of the invention and the scope of the appended claims.

The invention claimed is:

1. A video processing apparatus, comprising:

a first radio communication circuit implementing a first transmission scheme having a first modulation scheme and a first transmission frequency band, the first radio communication circuit capable of transmitting video information by radio or receiving information by radio using the first transmission frequency band;

a second radio communication circuit implementing a second transmission scheme having a second modulation scheme different from the first modulation scheme and a second transmission frequency band different from the first transmission frequency band, the second radio communication circuit capable of connecting by radio to an internet or a home network to transmit and receive information using the second transmission frequency band;

a third radio communication circuit capable of transmitting information and using a third transmission frequency band;

an imaging circuit capable of receiving video information and still picture information via an optical system;

a compression circuit compressing the still picture information using a first type of compression method and the video information using a second type of compression method;

an accumulation circuit capable of accumulating video information received by the imaging circuit; and a controller controlling assignment of connection of each of the first, second, and third radio communication circuits,

wherein the first radio communication circuit can transmit video information accumulated in the accumulation circuit to an external device by radio,

wherein when an indication from a user indicates to transmit video information using the first radio communication circuit, the controller assigns a connection to the first radio communication circuit for transmitting the video,

wherein the controller controls each of the first and second radio communication circuit so that the first radio communication circuit transmits video information while the second radio communication circuit connects to the internet or the home network, and

wherein one of the first, second, or third radio communication circuits receives a signal from the internet indicating that an update for an operating system of the video processing apparatus is available, and the video processing apparatus executes an update process such that an updated operating system of the video processing apparatus is stored in the video processing apparatus after execution of the update process.

2. The video processing apparatus according to claim **1**, wherein, upon receiving an indication to transmit video information accumulated in the accumulation circuit via the first radio communication circuit, the controller assigns connection of the first radio communication circuit prior to connection of the second radio communication circuit.

3. The video processing apparatus according to claim **1**, wherein, upon receiving an indication to transmit video information accumulated in the accumulation circuit via the first radio communication circuit while acquiring information from the internet via the second radio communication circuit, the controller assigns connection of the first radio communication circuit prior to connection of the second radio communication circuit.

4. The video processing apparatus according to claim **1**, further comprising a radio interface capable of receiving video information by radio,

wherein the accumulation circuit accumulates the video information received via the radio interface, and

the first radio communication circuit is further capable of transmitting the accumulated video information.

5. The video processing apparatus of claim **1**, further comprising a fourth radio communication circuit capable of transmitting information and using a fourth transmission frequency band that is different from the first, second, and third transmission frequency bands, wherein the controller controls assignment of connection of each of the first, second, third, and fourth radio communication circuits.

6. The video processing apparatus of claim **1**, wherein the third transmission frequency band is different from the first and second transmission frequency bands.

7. The video processing apparatus of claim **1**, wherein transmitting of the information by the third radio communication circuit comprises transmitting video information to the external device.

8. The video processing apparatus of claim **1**, wherein transmitting of the information by the third radio communication circuit comprises connecting to the internet.

9. The video processing apparatus of claim **1**, further comprising an input device capable of receiving a user's selection of content to be displayed on the video processing apparatus.

10. The video processing apparatus of claim **1**, wherein one of the first, second, or third radio communication circuits receive a signal from the internet indicating that an update for an application of the video processing apparatus is available, and the video processing apparatus executes an application update process such that an updated application of the video processing apparatus is stored in the video processing apparatus after execution of the application update process.

11. The video processing apparatus of claim **1**, further comprising:

a display for displaying a screen requesting user input, wherein the displayed screen prompts the user for a user input that indicates whether the user allows a connection between the first radio communication circuit and the external device to be established, wherein in response to receiving the user input indicating allowance of the connection, the first radio communication circuit transmits the accumulated video information to the external device.

12. The video processing apparatus of claim **1**, wherein the second modulation scheme comprises quadrature amplitude modulation (QAM).

13. The video processing apparatus of claim **1**, wherein the second radio communication circuit is controllable to change from the second modulation scheme to a different modulation scheme.

14. The video processing apparatus of claim **1**, wherein the video processing apparatus comprises a cellular phone.

15. The video processing apparatus of claim **1**, wherein the second and third radio communication circuits conduct demodulation through Orthogonal Frequency Division Multiplexing (OFDM).

16. The video processing apparatus of claim **1**, wherein at least the first radio communication circuit and the third radio communication circuit are implemented as a combined circuit.

17. A method for video processing, comprising:

receiving video information and still picture information via an optical system by an imaging circuit of a video processing apparatus;

compressing the still picture information using a first type of compression method and the video information using a second type of compression method;

accumulating video information received by the imaging circuit;

implementing a first transmission scheme having a first modulation scheme and a first transmission frequency band;

transmitting, using the first transmission frequency band, the video information to an external device by radio, via a first radio communication circuit;

implementing a second transmission scheme having a second modulation scheme different from the first modulation scheme and a second transmission frequency band different from the first transmission frequency band;

connecting, by radio, to an internet or a home network to transmit and receive information using the second transmission frequency band, via a second radio communication circuit;

transmitting, via a third radio communication circuit, information using a third transmission frequency band;

controlling, via a controller, assignment of connection of each of the first, second, and third radio communication circuits, wherein when an indication from a user indicates to transmit video information using the first radio communication circuit, a connection is assigned to the first radio communication circuit for transmitting the video,

wherein the transmitting and connecting is controlled so that the first radio communication circuit transmits video information while the second radio communication circuit connects to the internet or the home network;

receiving, via one of the first, second, or third radio communication circuits a signal from the internet indicating that an update for an operating system is available;

executing the update process; and

storing an updated operating system after execution of the update process.

18. The method of claim **17**, further comprising transmitting, via a fourth radio communication circuit, information using a fourth transmission frequency band that is different from the first, second, and third transmission frequency bands.

19. The method of claim **17**, wherein transmitting of the information by the third radio communication circuit comprises connecting to the internet.

20. The method of claim **17**, further comprising:

receiving, via one of the first, second, or third radio communication circuits a signal from the internet indicating that an update for an application is available;

executing the application update process; and

storing an updated application after execution of the application update process.

21. The method of claim **17**, further comprising:

displaying a screen requesting user input, the displayed screen prompting the user for a user input that indicates whether the user allows a connection between the first radio communication circuit and the external device to be established;

receiving a user input indicating allowance of the connection;

transmitting, via the first radio communication circuit, the accumulated video information to the external device in response to receiving the user input indicating allowance.

22. The method of claim **17**, wherein the second modulation scheme comprises quadrature amplitude modulation (QAM).

23. The method of claim **17**, further comprising controlling the second radio communication circuit to change modulation scheme from the second modulation scheme to a different modulation scheme.

24. The method of claim **17**, further comprising conducting demodulation through Orthogonal Frequency Division Multiplexing (OFDM) via the second and third radio communication circuits.

25. A cellular phone, comprising:

a first radio communication circuit implementing a first transmission scheme having a first modulation scheme and first transmission frequency band, the first radio communication circuit capable of transmitting video information by radio or receiving information by radio using the first transmission frequency band;

a second radio communication circuit implementing a second transmission scheme having a second modulation scheme different from the first modulation scheme and a second transmission frequency band different from the first transmission frequency band, the second radio communication circuit capable of connecting by radio to an internet or a home network to transmit and receive information using the second transmission frequency band;

a third radio communication circuit capable of transmitting information using a third transmission frequency band;

a fourth radio communication circuit capable of transmitting information using a fourth transmission frequency band;

an imaging circuit capable of receiving video information and still picture information via an optical system;

a compression circuit compressing the still picture information using a first type of compression method and the video information using a second type of compression method;

a microphone receiving audio information corresponding to the video information received via the imaging circuit;

an accumulation circuit capable of accumulating video information received by the imaging circuit and audio information received by the microphone, wherein the first radio communication circuit can transmit video information accumulated in the accumulation circuit to an external device by radio;

a display displaying the video information received by the first radio communication circuit and displaying information received by the second radio communication circuit via the internet or home network;

a controller controlling assignment of connection of each of the first, second, third, and fourth radio communication circuits,

wherein when an indication from a user indicates to transmit video information using the first radio communication circuit, the controller assigns a connection to the first radio communication circuit for transmitting the video information,

wherein the controller controls each of the first and second radio communication circuit so that the first radio communication circuit transmits video information and the second radio communication circuit connects to the internet or the home network, and

wherein one of the first, second, or third radio communication circuits receives a signal from the internet indicating that an update for an operating system of the cellular phone is available, and the cellular phone executes an update process such that an updated operating system of the cellular phone is stored in the cellular phone after execution of the update process.

26. The cellular phone of claim **25**, wherein one of the first, second, or third radio communication circuits receive a signal from the internet indicating that an update for an application of the cellular phone is available, and the cellular phone executes an application update process such that an updated application of the cellular phone is stored in the cellular phone after execution of the application update process.

27. The cellular phone of claim **25**, wherein the first modulation scheme comprises shift keying modulation and the second modulation scheme comprises quadrature amplitude modulation (QAM).

28. A video processing apparatus, comprising:

a first radio communication circuit implementing a first transmission scheme having a first modulation scheme and a first transmission frequency band, the first radio communication circuit capable of transmitting video information by radio or receiving information by radio using the first transmission frequency band;

a second radio communication circuit implementing a second transmission scheme having a second modulation scheme different from the first modulation scheme and a second transmission frequency band different from the first transmission frequency band, the second radio communication circuit capable of connecting by radio to an internet or a home network to transmit and receive information using the second transmission frequency band;

a third radio communication circuit capable of transmitting information and using a third transmission frequency band;

means for receiving video information and still picture information via an optical system;

means for compressing the still picture information using a first type of compression method and the video information using a second type of compression method;

means for accumulating video information received by the means for receiving; and

means for controlling assignment of connection of each of the first, second, and third radio communication circuits,

wherein the first radio communication circuit can transmit video information accumulated in the means for accumulating to an external device by radio,

wherein when an indication from the user indicates to transmit video information using the first radio communication circuit, the means for controlling assigns a connection to the first radio communication circuit for transmitting the video,

wherein the means for controlling controls each of the first and second radio communication circuit so that the first radio communication circuit transmits video information while the second radio communication circuit connects to the internet or the home network, and

wherein one of the first, second, or third radio communication circuits receive a signal from the internet indicating that an update for an operating system of the video processing apparatus is available, and the video processing apparatus executes an update process such that an updated operating system of the video processing apparatus is stored in the video processing apparatus after execution of the update process.

* * * * *