UNITED STATES INTERNATIONAL TRADE COMMISSION

Washington, D.C.

In the Matter of **CERTAIN MOBILE ELECTRONIC DEVICES**	**Inv. No. 337-TA-1432**

INITIAL DETERMINATION ON VIOLATION OF SECTION 337 AND RECOMMENDED DETERMINATION ON REMEDY AND BOND

Administrative Law Judge Cameron Elliot

(July 1, 2026)

Pursuant to the Notice of Investigation and Rule 210.42(a) of the Rules of Practice and Procedure of the United States International Trade Commission, this is my Initial Determination in the matter of *Certain Mobile Electronic Devices*, Investigation No. 337-TA-1432.

TABLE OF CONTENTS

I. INTRODUCTION 1

A. Procedural Background 1
B. The Parties 3
C. The Asserted Patents and Claims 3
D. Products at Issue 5

II. STANDARDS OF LAW 5

A. Standing 5
B. Claim Construction 5
C. Infringement 9
D. Domestic Industry 11
1. Technical Prong 12
2. Economic Prong 13
E. Invalidity 14
1. 35 U.S.C. § 102 14
2. 35 U.S.C. § 103 15
3. 35 U.S.C. § 112 17

III. IMPORTATION AND STATUTORY AUTHORITY 19

IV. U.S. PATENT NO. 8,130,280 19

A. Level of Ordinary Skill in the Art 19
B. Claims at Issue 21
C. Claim Construction 22
1. "a difference between a maximum luminance value and a minimum luminance value" 22
2. "maximum value or a minimum value of image signals" 24
3. "in response to an instruction for photography" 28
D. Infringement 30
1. Claim 1 30
2. Claim 14 36
E. Domestic Industry – Technical Prong 40
1. Representativeness of the 280 DI Products 40

[redacted]

2. Claim 1 41
3. Claim 14 43

F. Validity 45
1. Misawa and Claim 1 46
2. Misawa, Yoshida, and Claim 14 50

V. U.S. PATENT NO. 11,490,004 54

A. Level of Ordinary Skill in the Art 54
B. Claims at Issue 54
C. Claim Construction 56
D. Representativeness of the 004 DI Products 59
E. Infringement and Technical Prong of Domestic Industry 61
1. Claim 1 61
2. Claim 10 74
3. Samsung Redesigned Products 74

F. Validity 76
1. Cho and Limitation [1d] 78
2. Limitation [1h] 81
3. Limitation [1l] 82
4. Limitations [1n] and [1o] 84
5. Limitation [1p] 85
6. Limitation [1r] 87
7. Limitation [1s] 88
8. Claim 10 88
9. Summary and Discussion 89

VI. U.S. PATENT NO. 12,108,103 90

A. Level of Ordinary Skill in the Art 90
B. Claims at Issue 90
C. Claim Construction 92
1. "remote control device" 92
2. "icon" 94
3. "the second icon is not displayed when the first icon is displayed" 96

D. Infringement 98
1. Limitation [1d] 100

2. Limitation [1g] 102
3. Limitation [1h] 106
4. Limitation [1k] 106
5. Limitation [1l] 107
6. Limitation [1m] 108
7. Limitation [1n] 110
8. Samsung Redesigned Products 110
E. Domestic Industry – Technical Prong 112
1. Representativeness of the 103 DI Products 112
2. Limitation [1d] 112
3. Limitation [1g] 114
4. Limitation [1h] 115
5. Limitation [1k] 115
6. Limitation [1l] 116
7. Limitations [1m] and [1n] 116
F. Validity 119
1. Obviousness 120
2. Written Description 130
VII. U.S. PATENT NO. 11,445,241 AND U.S. PATENT NO. 11,509,953 132
A. Claims at Issue and Level of Ordinary Skill in the Art 132
B. Claim Construction 132
1. "based on a user instruction" 132
2. "means for controlling" 134
3. "an indication from a user indicates to transmit video information using the first radio communication circuit" 139
C. Infringement 139
1. Claim 1 of the 953 patent 140
2. Claim 2 of the 953 patent 144
3. Claim 9 of the 953 patent 154
4. Claim 30 of the 953 patent 155
5. Claim 1 of the 241 patent 159
6. Claim 5 of the 241 patent 166
7. Claim 7 of the 241 patent 166
8. Claim 15 of the 241 patent 167

Maxell, Ltd.
EX2041
Page 4 of 236

[redacted]

9. Claim 28 of the 241 patent 167

D. Domestic Industry – Technical Prong 170

1. Similarity of the 241 and 953 Products 170

2. Claim 1 of the 953 patent 171

3. Claim 2 of the 953 patent 173

4. Claim 9 of the 953 patent 175

5. Claim 30 of the 953 patent 178

6. Claim 1 of the 241 Patent 181

7. Claim 5 of the 241 Patent 183

8. Claim 7 of the 241 Patent 183

9. Claim 15 of the 241 Patent 183

10. Claim 28 of the 241 Patent 184

E. Validity 185

1. Summary of References and a POSITA's Knowledge 187

2. 241 Patent 189

3. 953 Patent 198

4. Section 112 204

VIII. DOMESTIC INDUSTRY - ECONOMIC PRONG 210

A. Subsection (A) 211

B. Subsection (B) 215

C. Significance and Substantiality 218

IX. CONCLUSIONS OF LAW 222

X. RECOMMENDED DETERMINATION ON REMEDY AND BOND 223

XI. INITIAL DETERMINATION AND ORDER 2266

TABLE OF ABBREVIATIONS

CDX	Complainant's Demonstrative Exhibit
CIB	Complainant's Revised Initial Post-Hearing Brief
CPB	Complainant's Pre-Hearing Brief
CPX	Complainant's Physical Exhibit
CRB	Complainant's Reply Post-Hearing Brief
CX	Complainant's Exhibit
Hr'g Tr.	Hearing Transcript
JX	Joint Exhibit
RDX	Samsung' Demonstrative Exhibit
RIB	Samsung' Initial Post-Hearing Brief
RPB	Samsung' Pre-Hearing Brief
RPX	Samsung' Physical Exhibit
RRB	Samsung' Reply Post-Hearing Brief
RX	Samsung' Exhibit

Maxell, Ltd.
EX2041
Page 6 of 236

I. INTRODUCTION

A. Procedural Background

Complainant Maxell, Ltd. ("Maxell") filed the complaint underlying this investigation on December 16, 2024, with a first supplement filed on December 24, 2024, and a second supplement filed on January 6, 2025. The complaint alleged respondents Samsung Electronics Co., Ltd. and Samsung Electronics America, Inc. ("Samsung") import or sell in connection with an importation certain computing devices utilizing indexed search systems and components thereof that infringe one or more claims of U.S. Patent No. 8,130,280 ("the 280 patent"); U.S. Patent No. 11,490,004 ("the 004 patent"); U.S. Patent No. 11,750,915 ("the 915 patent"); U.S. Patent No. 11,509,953 ("the 953 patent"); U.S. Patent No. 12,108,103 ("the 103 patent"); and U.S. Patent No. 11,445,241 ("the 241 patent") (together, the "Asserted Patents").

By publication of a notice in the *Federal Register* on January 23, 2025, the U.S. International Trade Commission ordered that:

> Pursuant to subsection (b) of section 337 of the Tariff Act of 1930, as amended, an investigation be instituted to determine whether there is a violation of subsection (a)(1)(B) of section 337 in the importation into the United States, the sale for importation, or the sale within the United States after importation of certain products identified in paragraph (2) by reason of infringement of one or more of claims 1-11 and 14-17 of the '280 patent, claims 1, 2, 4, 7-12, and 14-20 of the '004 patent, claims 1, 4, 5, 7-11, and 14-19 of the '915 patent, claims 1-30 of the '953 patent; claims 1-3, 5-7, 9, and 11-21 of the '103 patent; and claims 1-3, 5-14, 17-23, and 25-28 of the '241 patent, and whether an industry in the United States exists as required by subsection (a)(2) of section 337[.]

90 Fed. Reg. 8032 (Jan. 23, 2025).

On January 17, 2025, the investigation was assigned to me. EDIS Doc. ID 841294. On February 10, 2025, I set a target date of July 23, 2026 for completion of this investigation via initial determination. Order No. 4. On February 27, 2025, the Commission affirmed Order No. 4. EDIS

Maxell, Ltd.
EX2041
Page 7 of 236

Doc. ID 844659. On February 11, 2025, I set the evidentiary hearing for October 10-17, 2025. Order No. 5.

On February 6, 2025, Maxell moved (1432-002) to amend the notice of investigation to include claims 15 and 24 of the 241 patent. The motion was granted via initial determination on February 21, 2025. Order No. 6. On March 10, 2025, the Commission determined not to review Order No. 6. EDIS Doc. ID 845409.

On August 11, 2025, Maxell moved (1432-014) for summary determination regarding the affirmative defenses of prosecution laches and collateral estoppel. The motion was granted-in-part as to Samsung's prosecution laches defense via initial determination on September 2, 2025. Order No. 18. On September 25, 2025, the Commission affirmed Order No. 18. EDIS Doc. ID 863093.

On November 19, 2025, in view of the shutdown of the Federal Government due to a lapse of appropriations, and the availability of the parties, I moved the evidentiary hearing to February 9-13, 2026, and the target date to November 5, 2026 via initial determination.[1] Order No. 24. On March 10, 2025, the Commission determined not to review Order No. 24. EDIS Doc. ID 856579.

On December 19, 2025, Maxell moved (1432-033) to terminate claims 2-11, 15, 16, and 17 of the 280 patent, claims 2, 4, 7-9, 11, 12, 14-20 of the 004 patent, claims 1, 3-8, and 10-29 of the 953 patent, claims 2, 3, 5-7, 9, and 11-21 of the 103 patent, claims 1-3, 6, 8-14, and 17-27 of the 241 patent, and all asserted claims of the 915 patent from the investigation by reason of withdrawal. The motion was granted via initial determination on January 2, 2026. Order No. 27.

[1] On November 14, 2025, I moved the evidentiary hearing to January 16-23, 2026, and the target date to October 15, 2026 via initial determination. Order No. 23. On March 10, 2025, the Commission determined not to review Order No. 23. EDIS Doc. ID 865595. It was then communicated to my office that the parties were unavailable for the hearing on January 16-23, 2026. Order No. 24.

On February 3, 2026, the Commission determined not to review Order No. 27. EDIS Doc. ID 871344.

The evidentiary hearing took place on February 9-13, 2026. Pursuant to the procedural schedule, the parties submitted initial and reply post-hearing briefs on March 10, 2026 and March 31, 2026, respectively.

On May 7, 2026, Samsung requested official notice of a recently-issued Final Written Decision of the Patent Trial and Appeal Board finding asserted claims 5 and 15 (and unasserted independent claim 1) of the 241 patent unpatentable. *See* EDIS Doc. ID 881642. That request was unopposed and is granted, but Samsung also requested leave to file supplemental briefing, which was opposed. *See* EDIS Doc. ID 882293. Maxell is correct that Samsung's theories of invalidity before the PTAB differed materially from those presented in this investigation. *See id*. at 2. In particular Samsung does not appear to have relied on WiMax in any significant way before the PTAB, whereas WiMax is central to Samsung's obviousness theories in this investigation, as discussed below. *See generally* EDIS Doc. ID 881642, Ex. A. Because Samsung's theories before the PTAB exceed the scope of its contentions here, Samsung's request is DENIED.

As of the date of this initial determination, no motions remain pending.

B. The Parties

Complainant Maxell, Ltd. is a Japanese corporation. *See* CIB at 4. Respondent Samsung Electronics Co., Ltd. is a corporation organized under the laws of the Republic of Korea. See RIB at 6. Respondent Samsung Electronics America, Inc. is a direct subsidiary of Samsung Electronics Co., Ltd., and is headquartered in Ridgefield Park, NJ. *Id.*

C. The Asserted Patents and Claims

[redacted]

The 280 patent, entitled "Electronic Camera," issued on March 6, 2012 to Kazuharu Imafuji, Toshiharu Matsuda, and Kimio Uematsu. The 280 patent claims priority to, *inter alia*, a Japanese application filed on September 26, 2007.

The 004 patent, entitled "Mobile Terminal," issued on November 1, 2022 to Ryuji Nishimura. The 004 patent claims priority to, *inter alia*, a Japanese application filed on June 23, 2016.

The 103 patent, entitled "Portable Terminal, Information Processing Apparatus, Content Display System and Content Display Method," issued on October 1, 2024 to Takashi Matsubara, et al. The 103 patent claims priority to, *inter alia*, a Japanese application filed on September 26, 2007.

The 241 patent, entitled "Information Processing Apparatus and Information Processing Method," issued on September 13, 2022, to Toshiyuki Kurita and Hitoaki Owashi. The 953 patent, also entitled "Information Processing Apparatus and Information Processing Method," issued on November 22, 2022, to the same inventors. The 241 and 953 patents issued from a generally common series of continuation applications, share a common specification, and claim priority to, *inter alia*, a Japanese application filed on November 28, 2007.

The following patent claims are presently at issue in this investigation, according to Maxell's briefing:

Asserted Patent	Infringement Claims	Domestic Industry Claims
8,130,280	1, 14	1, 14
11,490,004	1, 10	1, 10
12,108,103	1	1
11,509,953	2, 9, 30	2, 9, 30

[redacted]

11,445,241	5, 7, 15, 28	5, 7, 15, 28

See generally CIB at x-xvi.

D. Products at Issue

Maxell identifies the domestic industry products as a collection of Motorola smartphones. *See* CIB at 11 (citing CX-0394C). Maxell licensed all five Asserted Patents to Motorola in June 2023, although not all Motorola smartphones practice all five patents. *See* Hr'g Tr. (Jarosz) at 552:20-553:18; CX-0394C. The parties have not agreed on the representativeness of any DI Products. *See* RIB at 8.

The Accused Products consist of over 40 Samsung smartphones and tablets. *See* JX-0013C. For the 280, 103, and 004 patents, the parties agree that the Samsung Galaxy S25 is representative, and for the 953 and 241 patents, the parties agree that the Samsung Galaxy S25 and S22 are representative. *See id*.

II. STANDARDS OF LAW

A. Standing

Commission Rule 210.12 states in relevant part "[f]or every intellectual property based complaint (regardless of the type of intellectual property involved), [the complaint must] include a showing that at least one complainant is the owner or exclusive licensee of the subject intellectual property." 19 C.F.R. § 210.12(a)(7). In determining whether this rule is met, the Commission looks to the standing requirement used by courts in patent infringement cases. *Certain Audio Processing Hardware, Software, and Products Containing the Same*, Inv. No. 337-TA-1026, Comm'n Op. at 9 (April 18, 2018) (citations omitted).

B. Claim Construction

"The construction of claims is simply a way of elaborating the normally terse claim language in order to understand and explain, but not to change, the scope of the claims." *Embrex, Inc. v. Serv. Eng'g Corp.*, 216 F.3d 1343, 1347 (Fed. Cir. 2000). Although most of the disputed claim terms were construed in an earlier order, some of the issues presented below are only resolvable with additional claim construction.

Claim construction focuses on the intrinsic evidence, which consists of the claims themselves, the specification, and the prosecution history. *See Phillips v. AWH Corp.*, 415 F.3d 1303, 1314 (Fed. Cir. 2005) (en banc); *see also Markman v. Westview Instr., Inc.*, 52 F.3d 967, 979 (Fed. Cir. 1995) (en banc). As the Federal Circuit in *Phillips* explained, courts must analyze each of these components to determine the "ordinary and customary meaning of a claim term" as understood by a person of ordinary skill in art at the time of the invention. 415 F.3d at 1313. "Such intrinsic evidence is the most significant source of the legally operative meaning of disputed claim language." *Bell Atl. Network Servs., Inc. v. Covad Commc'ns Grp., Inc.*, 262 F.3d 1258, 1267 (Fed. Cir. 2001).

"It is a 'bedrock principle' of patent law that 'the claims of a patent define the invention to which the patentee is entitled the right to exclude.'" *Phillips*, 415 F.3d at 1312 (quoting *Innova/Pure Water, Inc. v. Safari Water Filtration Sys., Inc.*, 381 F.3d 1111, 1115 (Fed. Cir. 2004)). "Quite apart from the written description and the prosecution history, the claims themselves provide substantial guidance as to the meaning of particular claims terms." *Id.* at 1314; *see Interactive Gift Express, Inc. v. Compuserve Inc.*, 256 F.3d 1323, 1331 (Fed. Cir. 2001) ("In construing claims, the analytical focus must begin and remain centered on the language of the claims themselves, for it is that language that the patentee chose to use to 'particularly point [ ] out and distinctly claim [ ] the subject matter which the patentee regards as his invention."). The

context in which a term is used in an asserted claim can be "highly instructive." *Phillips*, 415 F.3d at 1314. Additionally, other claims in the same patent, asserted or unasserted, may also provide guidance as to the meaning of a claim term. *Id.* "Courts do not rewrite claims; instead, we give effect to the terms chosen by the patentee." *K-2 Corp. v. Salomon S.A.*, 191 F.3d 1356, 1364 (Fed. Cir. 1999). "[T]he specification 'is always highly relevant to the claim construction analysis. Usually it is dispositive; it is the single best guide to the meaning of a disputed term.'" *Phillips*, 415 F.3d at 1315 (quoting *Vitronics Corp. v. Conceptronic, Inc.*, 90 F.3d 1576, 1582 (Fed. Cir. 1996)). "[T]he specification may reveal a special definition given to a claim term by the patentee that differs from the meaning it would otherwise possess. In such cases, the inventor's lexicography governs." *Id.* at 1316.

In addition to the claims and the specification, the prosecution history should be examined, if in evidence. *Phillips*, 415 F.3d at 1317; *see Liebel-Flarsheim Co. v. Medrad, Inc.*, 358 F.3d 898, 913 (Fed. Cir. 2004). The prosecution history can "often inform the meaning of the claim language by demonstrating how the inventor understood the invention and whether the inventor limited the invention in the course of prosecution, making the claim scope narrower than it would otherwise be." *Phillips*, 415 F.3d at 1317; *see Chimie v. PPG Indus. Inc.*, 402 F.3d 1371, 1384 (Fed. Cir. 2005) ("The purpose of consulting the prosecution history in construing a claim is to exclude any interpretation that was disclaimed during prosecution.").

When the intrinsic evidence does not establish the meaning of a claim, then extrinsic evidence (i.e., all evidence external to the patent and the prosecution history, including dictionaries, inventor testimony, expert testimony, and learned treatises) may be considered. *Phillips*, 415 F.3d at 1317. Extrinsic evidence is generally viewed as less reliable than the patent itself and its prosecution history in determining how to define claim terms. *Id.* "The court may

[redacted]

receive extrinsic evidence to educate itself about the invention and the relevant technology, but the court may not use extrinsic evidence to arrive at a claim construction that is clearly at odds with the construction mandated by the intrinsic evidence." *Elkay Mfg. Co. v. Ebco Mfg. Co.*, 192 F.3d 973, 977 (Fed. Cir. 1999).

The construction of a claim term is generally guided by its ordinary meaning. However, courts may deviate from the ordinary meaning when: (1) "the intrinsic evidence shows that the patentee distinguished that term from prior art on the basis of a particular embodiment, expressly disclaimed subject matter, or described a particular embodiment as important to the invention;" or (2) "the patentee acted as his own lexicographer and clearly set forth a definition of the disputed claim term in either the specification or prosecution history." *Edwards Lifesciences LLC v. Cook Inc.*, 582 F.3d 1322, 1329 (Fed. Cir. 2009); *see Apple Inc. v. Wi-LAN Inc.*, 25 F.4th 960, 967 (Fed. Cir. 2022); *GE Lighting Sols., LLC v. AgiLight, Inc.*, 750 F.3d 1304, 1309 (Fed. Cir. 2014) ("the specification and prosecution history only compel departure from the plain meaning in two instances: lexicography and disavowal."); *Omega Eng'g, Inc, v. Raytek Corp.*, 334 F.3d 1314, 1324 (Fed. Cir. 2003) ("[W]here the patentee has unequivocally disavowed a certain meaning to obtain his patent, the doctrine of prosecution disclaimer attaches and narrows the ordinary meaning of the claim congruent with the scope of the surrender."); *Rheox, Inc. v. Entact, Inc*., 276 F.3d 1319, 1325 (Fed. Cir. 2002) ("The prosecution history limits the interpretation of claim terms so as to exclude any interpretation that was disclaimed during prosecution."). Nevertheless, there is a "heavy presumption that a claim term carries its ordinary and customary meaning." *CCS Fitness, Inc. v. Brunswick Corp.*, 288 F.3d 1359, 1366 (Fed. Cir. 2002) (citations omitted). The standard for deviating from the plain and ordinary meaning is "exacting" and requires "a clear and unmistakable disclaimer." *Thorner v. Sony Computer Entm't Am. LLC*, 669 F.3d 1362, 1366-67

(Fed. Cir. 2012); *see Epistar Corp. v. Int'l Trade Comm'n*, 566 F.3d 1321, 1334 (Fed. Cir. 2009) (requiring "expressions of manifest exclusion or restriction, representing a clear disavowal of claim scope" to deviate from the ordinary meaning) (citation omitted).

C. Infringement

"An infringement analysis entails two steps. The first step is determining the meaning and scope of the patent claims asserted to be infringed. The second step is comparing the properly construed claims to the device accused of infringing." *Markman*, 52 F.3d at 976. A patentee may prove infringement either literally or under the doctrine of equivalents. Infringement of either sort must be proven by a preponderance of the evidence. *SmithKline Diagnostics, Inc. v. Helena Labs. Corp.*, 859 F.2d 878, 889 (Fed. Cir. 1988). A preponderance of the evidence standard "requires proving that infringement was more likely than not to have occurred." *Warner-Lambert Co. v. Teva Pharm. USA, Inc.*, 418 F.3d 1326, 1341 n.15 (Fed. Cir. 2005).

Literal infringement is a question of fact. *Finisar Corp. v. DirecTV Group, Inc.*, 523 F.3d 1323, 1332 (Fed. Cir. 2008). "To establish literal infringement, every limitation set forth in a claim must be found in an accused product, exactly." *Microsoft Corp. v. GeoTag, Inc.*, 817 F.3d 1305, 1313 (Fed. Cir. 2016) (quoting *Southwall Techs., Inc. v. Cardinal IG Co.*, 54 F.3d 1570, 1575 (Fed. Cir. 1995). If any claim limitation is absent, there is no literal infringement of that claim as a matter of law. *Bayer AG v. Elan Pharm. Research Corp.*, 212 F.3d 1241, 1247 (Fed. Cir. 2000).

Doctrine of equivalents is also a form of infringement. One rubric for evaluating if a claimed feature is not literally, but nonetheless equivalent to, a claimed feature is known as the function-way-result test. Under this test, the accused feature is equivalent to the claim limitation when "it performs substantially the same function in substantially the same way to obtain the same result." *Duncan Parking Techs., Inc. v. IPS Grp., Inc.*, 914 F.3d 1347, 1362 (Fed. Cir. 2019)

(quoting *Graver Tank & Mfg. Co. v. Linde Air Prods. Co.*, 339 U.S. 605, 608 (1950)). Another is known as the insubstantial differences test, where "[a]n element in the accused device is equivalent to a claim limitation if the only differences between the two are insubstantial." *Voda v. Gordia Corp.*, 536 F.3d 1311, 1326 (Fed. Cir. 2008) (citing *Honeywell Int'l Inc. v. Hamilton Sundstrand Corp.*, 370 F.3d 1131, 1139 (Fed. Cir. 2004)). The Supreme Court has further instructed, "the proper time for evaluating equivalency . . . is at the time of infringement, not at the time the patent was issued." *Warner-Jenkinson Co., Inc. v. Hilton Davis Chem. Co.*, 520 U.S. 17, 37 (1997).

In addition to direct infringement, Section 271 of the Patent Act defines two categories of indirect infringement, inducement of infringement and contributory infringement. 35 U.S.C. § 271. For indirect infringement violations under Section 337, the direct infringement element may occur after importation, so long as all the other elements of indirect infringement are met at the time of importation. *See Certain Vision-Based Driver Assistance System Cameras and Components Thereof*, Inv. No. 337-TA-907, Comm'n Op. at 19 (Dec. 1, 2015) (citing *Suprema, Inc. v. Int'l Trade Comm'n*, 796 F.3d 1338, 1348 (Fed. Cir. 2015)). It is well settled that "[a]bsent direct infringement of the patent claims, there can be neither contributory infringement ... nor inducement of infringement." *Met–Coil Sys. Corp. v. Korners Unltd., Inc.*, 803 F.2d 684, 687 (Fed. Cir. 1986) (citations omitted).

As to the first category, "[w]hoever actively induces infringement of a patent shall be liable as an infringer." 35 U.S.C. § 271(b); *see DSU Med. Corp. v. JMS Co.*, 471 F.3d 1293, 1305 (Fed. Cir. 2006) (en banc) ("To establish liability under section 271(b), a patent holder must prove that once the defendants knew of the patent, they actively and knowingly aided and abetted another's direct infringement.") (citations omitted). "The mere knowledge of possible infringement by others does not amount to inducement; specific intent and action to induce infringement must be

proven." *Id.* (citations omitted). A defendant's belief regarding patent validity is not a defense to a claim of induced infringement. *Commil USA, LLC v. Cisco Sys., Inc.*, 135 S. Ct. 1920 (2015). A defendant's willful blindness on the question of infringement will satisfy the knowledge requirement. *Global-Tech Appliances, Inc. v. SEB S.A.*, 563 U.S. 754, 765, 768-771 (2011). The requisite intent to induce infringement "may be established through circumstantial evidence" and "'may be inferred from all of the circumstances.'" *See Broadcom Corp. v. Qualcomm, Inc.*, 543 F.3d 683, 699 (Fed. Cir. 2008) (citing *DSU Med. Corp. v. JMS Co.*, 471 F.3d 1293 (Fed. Cir. 2006); *Water Techs. Corp. v. Claco, Ltd.*, 850 F.2d 660, 669 (Fed. Cir. 1988)).

As to the second category, "a party who sells a component with knowledge that the component is especially designed for use in a patented invention, and is not a staple article of commerce suitable for substantial noninfringing use, is liable as a contributory infringer." *Wordtech Sys., Inc. v. Integrated Networks Solutions, Inc.*, 609 F.3d 1308, 1316 (Fed. Cir. 2010). Contributory infringement is premised upon a finding that: (1) the entity sells, offers to sell, or imports into the United States a component of a product; (2) the component has no substantial non-infringing use; (3) the component constitutes a material part of the claimed invention; (4) the entity was aware of the patent and knew that the product may be covered by a claim of the patent; and (5) the use of the component in the product directly infringes the claim. *See Certain Gaming & Entm't Consoles, Related Software, & Components Thereof*, Inv. No. 337-TA-752, Initial Determination (Remand) at 7-8 (Mar. 22, 2013) (citing 35 U.S.C. § 271(c); *Arris Group v. British Telecomm. PLC*, 639 F.3d 1368, 1376 (Fed. Cir. 2011)), *non-reviewed*, Notice (May 23, 2013). As with inducement, willful blindness on the question of infringement will satisfy the knowledge requirement. *Global-Tech*, 563 U.S. at 765, 768-771.

D. Domestic Industry

In an investigation based on a claim of patent infringement, section 337 requires that an industry in the United States, relating to the articles protected by the patent, exist or be in the process of being established. 19 U.S.C. § 1337(a)(2). Under Commission precedent, the domestic industry requirement has been divided into (i) a "technical prong" (which requires articles covered by the asserted patent) and (ii) an "economic prong" (which requires certain levels of activity with respect to the protected articles or patent itself). *See Certain Video Game Systems and Controllers*, Inv. No. 337-TA-743, Comm'n Op. at 6-7 (April 14, 2011) ("*Video Game Systems*").

1. Technical Prong

The technical prong of the domestic industry requirement is satisfied when the complainant in a patent-based section 337 investigation establishes that it is practicing or exploiting the patents at issue. *See* 19 U.S.C. §§ 1337 (a)(2), (3); *Certain Microsphere Adhesives, Process for Making Same and Prods. Containing Same, Including Self-Stick Repositionable Notes*, Inv. No. 337-TA-366, Comm'n Op. at 8 (U.S.I.T.C. Jan. 16, 1996). "In order to satisfy the technical prong of the domestic industry requirement, it is sufficient to show that the domestic industry practices any claim of that patent, not necessarily an asserted claim of that patent." *Certain Ammonium Octamolybdate Isomers*, Inv. No. 337-TA-477, Comm'n Op. at 55 (U.S.I.T.C. Aug. 28, 2003). Historically, the Commission permits the complainant's products, and those of its licensees, to be considered for technical prong purposes. *See Certain Magnetic Tape Cartridges and Components Thereof*, Inv. No. 337-TA-1058, Comm'n Op. at 28-29 (April 9, 2019).

The test for claim coverage for the purposes of the technical prong of the domestic industry requirement is the same as that for infringement. *See Certain Doxorubicin and Preparations Containing Same*, Inv. No. 337-TA-300, Initial Determination at 109 (U.S.I.T.C. May 21, 1990), *aff'd*, Views of the Commission at 22 (U.S.I.T.C. Oct. 31, 1990); *Alloc, Inc. v. Int'l Trade Comm'n*, 342 F.3d 1361, 1375 (Fed. Cir. 2003). "First, the claims of the patent are construed. Second, the

complainant's article or process is examined to determine whether it falls within the scope of the claims." *Certain Doxorubicin and Preparations Containing Same*, Inv. No. 337-TA-300, Initial Determination at 109. As with infringement, the technical prong of the domestic industry can be satisfied either literally or under the doctrine of equivalents. *Certain Dynamic Sequential Gradient Devices and Component Parts Thereof*, Inv. No. 337-TA-335, ID at 44, Pub. No. 2575 (U.S.I.T.C. May 15, 1992). In short, the patentee must establish by a preponderance of the evidence that the domestic product practices one or more claims of the patent.

2. Economic Prong

The "economic prong" of the domestic industry requirement is satisfied when there exists in the United States, in connection with products practicing at least one claim of the patent at issue: (A) significant investment in plant and equipment; (B) significant employment of labor or capital; or (C) substantial investment in its exploitation, including engineering, research and development, and licensing. 19 U.S.C. § 1337(a)(3). Establishment of the "economic prong" is not dependent on any "minimum monetary expenditure" and there is no need for complainant "to define the industry itself in absolute mathematical terms." *Certain Stringed Musical Instruments and Components Thereof*, Inv. No. 337-TA-586, Comm'n Op. at 25-26 (May 16, 2008) ("*Stringed Instruments*"). However, a complainant must substantiate the significance of its activities with respect to the articles protected by the patent. *Certain Printing and Imaging Devices and Components Thereof*, Inv. No. 337-TA-690, Comm'n Op. at 30 (Feb. 17, 2011) ("*Imaging Devices*"). Further, a complainant can show that its activities are significant by showing how those activities are important to the articles protected by the patent in the context of the company's operations, the marketplace, or the industry in question. *Id.* at 27-28. That significance, however, must be shown in a quantitative context. *Lelo Inc. v. Int'l Trade Comm'n*, 786 F.3d 879, 886 (Fed. Cir. 2015). The Federal Circuit noted that when the ITC first addressed this requirement, it found

the word "'significant' denoted 'an assessment of the *relative* importance of the domestic activities.'" *Id.* at 883-4 (internal citation omitted) (emphasis added). In general, "[t]he purpose of the domestic industry requirement is to prevent the ITC from becoming a forum for resolving disputes brought by foreign complainants whose only connection with the United States is ownership of a U.S. patent." *Certain Battery-Powered Ride-On Toy Vehicles*, Inv. No. 337-TA-314, USITC Pub. No. 2420, Initial Determination at 21 (Aug. 1991); *see Certain Vacuum Insulated Flasks and Components Thereof*, Inv. No. 337-TA-1216, Notice at 3-4 (Oct. 21, 2021) ("Given the nature and extent of [complainant's] investments in plant and equipment as a whole, [complainant] is not a mere importer.").

E. Invalidity

1. 35 U.S.C. § 102

Under the previous version of 35 U.S.C. § 102, a patent claim is invalid as anticipated if:

> (a) the invention was known or used by others in this country, or patented or described in a printed publication in this or a foreign country, before the invention thereof by the applicant;
>
> (b) the invention was patented or described in a printed publication in this or a foreign country or in public use or on sale in this country, more than one year prior to the date of the application for patent in the United States;

35 U.S.C. § 102 (pre-AIA). Under the current version, a patent claim is invalid as anticipated if:

> (1) the claimed invention was patented, described in a printed publication, or in public use, on sale, or otherwise available to the public before the effective filing date of the claimed invention; or
>
> (2) the claimed invention was described in a patent issued under section 151, or in an application for patent published or deemed published under section 122(b), in which the patent or application, as the case may be, names another inventor and was effectively filed before the effective filing date of the claimed invention.

35 U.S.C. § 102 (AIA). "A patent is invalid for anticipation if a single prior art reference discloses each and every limitation of the claimed invention. Moreover, a prior art reference may anticipate

without disclosing a feature of the claimed invention if that missing characteristic is necessarily present, or inherent, in the single anticipating reference." *Schering Corp. v. Geneva Pharm., Inc.*, 339 F.3d 1373, 1377 (Fed. Cir. 2003) (citations omitted); *see Santarus, Inc. v. Par Pharm., Inc.*, 694 F.3d 1344, 1354 (Fed. Cir. 2012). "A century-old axiom of patent law holds that a product 'which would literally infringe if later in time anticipates if earlier.'" *Upsher-Smith Labs., Inc. v. Pamlab, L.L.C.*, 412 F.3d 1319, 1322 (Fed. Cir. 2005) (citing *Schering Corp.*, 339 F.3d at 1322). Anticipation, and all other grounds of patent invalidity, must be proved by clear and convincing evidence. *Microsoft Corp. v. i4i Ltd. P'ship*, 564 U.S. 91, 95 (2011).

2. 35 U.S.C. § 103

Pursuant to the previous version of 35 U.S.C. § 103:

> A patent may not be obtained though the invention is not identically disclosed or described as set forth in section 102 of this title, if the differences between the subject matter sought to be patented and the prior art are such that the subject matter as a whole would have been obvious at the time the invention was made to a person having ordinary skill in the art to which said subject matter pertains. Patentability shall not be negated by the manner in which the invention was made.

35 U.S.C. § 103(a) (pre-AIA). Under the current version:

> A patent for a claimed invention may not be obtained, notwithstanding that the claimed invention is not identically disclosed as set forth in section 102, if the differences between the claimed invention and the prior art are such that the claimed invention as a whole would have been obvious before the effective filing date of the claimed invention to a person having ordinary skill in the art to which the claimed invention pertains. Patentability shall not be negated by the manner in which the invention was made.

35 U.S.C. § 103(a) (AIA). "Obviousness is a question of law based on underlying questions of fact." *Scanner Techs. Corp. v. ICOS Vision Sys. Corp. N.V.*, 528 F.3d 1365, 1379 (Fed. Cir. 2008). The underlying factual determinations include: "(1) the scope and content of the prior art, (2) the level of ordinary skill in the art, (3) the differences between the claimed invention and the prior art, and (4) objective indicia of non-obviousness." *Id.* (citing *Graham v. John Deere Co. of Kansas*

Maxell, Ltd.
EX2041
Page 21 of 236

City, 383 U.S. 1, 17-18 (1966)). These factual determinations are often referred to as the "*Graham* factors."

The critical inquiry in determining the differences between the claimed invention and the prior art is whether there is a reason to combine the prior art references. *KSR Int'l Co. v. Teleflex Inc.*, 550 U.S. 398, 418-21 (2007). In *KSR*, the Supreme Court rejected the Federal Circuit's rigid application of the teaching-suggestion-motivation test. While the Court stated that "it can be important to identify a reason that would have prompted a person of ordinary skill in the relevant field to combine the elements in the way the claimed new invention does," it described a more flexible analysis:

> Often, it will be necessary for a court to look to interrelated teachings of multiple patents; the effects of demands known to the design community or present in the marketplace; and the background knowledge possessed by a person having ordinary skill in the art, all in order to determine whether there was an apparent reason to combine the known elements in the fashion claimed by the patent at issue . . . . As our precedents make clear, however, the analysis need not seek out precise teachings directed to the specific subject matter of the challenged claim, for a court can take account of the inferences and creative steps that a person of ordinary skill in the art would employ.

Id. at 418. Since *KSR*, the Federal Circuit has announced that, where a patent challenger contends that a patent is invalid for obviousness based on a combination of prior art references, "the burden falls on the patent challenger to show by clear and convincing evidence that a person of ordinary skill in the art would have had reason to attempt to make the composition or device . . . and would have had a reasonable expectation of success in doing so." *PharmaStem Therapeutics, Inc. v. ViaCell, Inc.*, 491 F.3d 1342, 1360 (Fed. Cir. 2007); *see KSR*, 550 U.S. at 399 ("The proper question was whether a pedal designer of ordinary skill in the art, facing the wide range of needs created by developments in the field, would have seen an obvious benefit to upgrading Asano with a sensor.").

Maxell, Ltd.
EX2041
Page 22 of 236

[redacted]

An obviousness determination should also include a consideration of how "secondary considerations" such as "commercial success, long felt but unsolved needs, failure of others, etc., might be utilized to give light to the circumstances surrounding the origin of the subject matter sought to be patented." *Graham*, 338 U.S. at 17-18. "For [such] objective evidence to be accorded substantial weight, its proponent must establish a nexus between the evidence and the merits of the claimed invention." *In re GPAC Inc.*, 57 F.3d 1573, 1580 (Fed. Cir. 1995); *see Merck & Cie v. Gnosis S.P.A.*, 808 F.3d 829, 837 (Fed. Cir. 2015). "Where the offered secondary consideration actually results from something other than what is both claimed and novel in the claim, there is no nexus to the merits of the claimed invention." *In re Huai-Hung Kao*, 639 F.3d 1057, 1068 (Fed. Cir. 2011); *see Apple Inc. v. Samsung Elecs. Co., Ltd.*, 839 F.3d 1034, 1054-1056 (Fed. Cir. 2016).

3. 35 U.S.C. § 112

The prior version of the Patent Act recites:

> The specification shall contain a written description of the invention, and of the manner and process of making and using it, in such full, clear, concise, and exact terms as to enable any person skilled in the art to which it pertains, or with which it is most nearly connected, to make and use the same, and shall set forth the best mode contemplated by the inventor of carrying out his invention.
>
> The specification shall conclude with one or more claims particularly pointing out and distinctly claiming the subject matter which the applicant regards as his invention.

35 U.S.C. § 112 (pre-AIA). Under the current version:

> (a) IN GENERAL.—The specification shall contain a written description of the invention, and of the manner and process of making and using it, in such full, clear, concise, and exact terms as to enable any person skilled in the art to which it pertains, or with which it is most nearly connected, to make and use the same, and shall set forth the best mode contemplated by the inventor or joint inventor of carrying out the invention.
>
> (b) CONCLUSION.—The specification shall conclude with one or more claims particularly pointing out and distinctly claiming the subject matter which the inventor or a joint inventor regards as the invention.

Maxell, Ltd.
EX2041
Page 23 of 236

35 U.S.C. § 112 (AIA). Pursuant to section 112, a patent claim is invalid for lack of written description if the patent's specification fails to "reasonably convey[] to those skilled in the art that the inventor had possession of the claimed subject matter as of the filing date." *Ariad Pharm., Inc. v. Eli Lilly & Co.*, 598 F.3d 1336, 1351 (Fed. Cir. 2010) (en banc). "[T]he test requires an objective inquiry into the four corners of the specification from the perspective of a person of ordinary skilled in the art" (*id.*), and "the level of detail required to satisfy the written description requirement varies depending on the nature and scope of the claims and on the complexity and predictability of the relevant technology" (*id.* (citing *Capon v. Eshar*, 418 F.3d 1349, 1357-58 (Fed. Cir. 2005))).

A patent claim may also be invalid under Section 112 for lack of enablement. To prove that a claim is invalid for lack of enablement, a challenger must show by clear and convincing evidence that a person of ordinary skill in the art would not be able to practice the claimed invention without "undue experimentation." *Alcon Research Ltd. v. Barr Labs., Inc.*, 745 F.3d 1180, 1188 (Fed. Cir. 2014) (citation omitted). "Whether undue experimentation is needed is not a single, simple factual determination, but rather is a conclusion reached by weighting many factual considerations." *In re Wands*, 858 F.2d 731, 736-37 (Fed. Cir. 1988). Those considerations, commonly referred to as the "*Wands* factors," are:

> (1) the quantity of experimentation necessary, (2) the amount of direction or guidance presented, (3) the presence or absence of working examples, (4) the nature of the invention, (5) the state of the prior art, (6) the relative skill of those in the art, (7) the predictability or unpredictability of the art, and (8) the breadth of the claims.

Id. at 737. The Supreme Court has recently explained and held: "If a patent claims an entire class of processes, machines, manufactures, or compositions of matter, the patent's specification must enable a person skilled in the art to make and use the entire class. In other words, the specification must enable the full scope of the invention as defined by its claims. The more one claims, the more one must enable." *Amgen Inc. v. Sanofi*, 598 U.S. 594, 610, (2023).

A patent claim may further be invalid under Section 112 if it is indefinite. The statutory language, "particularly pointing out and distinctly claiming the subject matter which the inventor or a joint inventor regards as the invention," present in both previous and current versions of the statute, has been interpreted to require the patentee to "be precise enough to afford clear notice of what is claimed, thereby 'apprising the public of what is still open to them.'" *Nautilus, Inc. v. Biosig Instruments, Inc.*, 572 U.S. 898, 909 (citing *Markman*, 517 U.S. at 373). The Court held, "we read § 112, ¶ 2 to require that a patent's claims, viewed in light of the specification and prosecution history, inform those skilled in the art about the scope of the invention with reasonable certainty." *Id.* at 910. Thus, a claim is required to "provide objective boundaries for those of skill in the art," and a claim term is indefinite if it "might mean several different things and no informed and confident choice is among the contending definitions." *Interval Licensing LLC v. AOL, Inc.*, 766 F.3d 1364, 1371 (Fed. Cir. 2014). And the Federal Circuit reminds that it is not individual words or even limitations that are judged indefinite, but entire claims. *Cox Commc'ns, Inc. v. Sprint Commc'n Co. LP*, 838 F.3d 1224, 1231-2 (Fed. Cir. 2016) ("As *Nautilus* instructs, the dispositive question in an indefiniteness inquiry is whether the 'claims,' not particular claim terms, 'read in light of the specification delineating the patent, and the prosecution history, fail to inform, with reasonable certainty, those skilled in the art about the scope of the invention.'").

III. IMPORTATION AND STATUTORY AUTHORITY

Samsung has stipulated that the Accused Products have been imported into the United States. *See* CX-507C. Maxell is the assignee of all Asserted Patents, including the 280 patent, which was originally assigned to Nikon Corporation, and there are no disputes over the Commission's statutory authority. *See* EDIS Doc. ID 839326, Ex. 7.

IV. U.S. PATENT NO. 8,130,280

A. Level of Ordinary Skill in the Art

The parties propose slightly different versions of a person of ordinary skill in the art ("POSITA") at the time of the 280 patent's invention. Maxell contends:

> [That] a POSITA would have at least a Bachelor's degree in electrical engineering or computer engineering, or a related field, with at least two years of experience in the field of HDR processing, image signal processing, and CMOS image sensor technology.

CIB at 7 n.5. Samsung contends a POSITA:

> [W]ould have had at least a bachelors' degree in electrical engineering, computer engineering, computer science, or a comparable field of study, plus approximately two to three years of professional experience in the design and development of electronic cameras and image processing for image signals, or other relevant industry experience. Additional education or experience might substitute for the above requirements.

RIB at 9. Samsung argues that "[t]he differences between Samsung's definition of a person of skill and Maxell's definition of a person of skill do not impact the merits." *Id.* (citing Hr'g Tr. (Guidash) at 765:13-18; Hr'g Tr. (Schonfeld) at 1276:11-15). Maxell does not argue that the differences between the proposed definitions impact the merits. *See generally* CIB.

Neither party offers any argument as to why their definition is correct, however. *See generally* CIB; CRB; RIB; RRB. To the extent the appropriate level of skill in the art needs to be adjudicated, Maxell's is generally superior. *Cf. Genzyme Therapeutic Prods. Ltd. P'ship v. Biomarin Pharm. Inc.*, 825 F.3d 1360, 1372 (Fed. Cir. 2016) (failure to make a specific finding about the required level of skill in the art is not reversable error where the record did not show any meaningful differences in proposed definitions or that the outcome of the case would have been different based on which definition was selected). A computer science degree is not sufficiently focused on hardware to be suitable for a POSITA, at least not without additional education and/or experience, and given the 280 patent specification's heavy emphasis on image signal processing specifically for multiple photos taken at different exposures (*see, e.g.*, 280 patent at 3:39-67, 6:23-9:7, 10:19-11:32), Maxell's proposal is more particularized. Nonetheless, Samsung is correct that

[redacted]

experience and education can substitute for each other. Accordingly, a POSITA would have had at least a bachelor's degree in electrical engineering or computer engineering, or a related field, with at least two years of experience in the field of HDR processing, image signal processing, and CMOS image sensor technology, with additional relevant experience substituting for education and vice versa.

B. Claims at Issue

Independent claims 1 and 14 of the 280 patent are at issue in this investigation, either through allegations of infringement or domestic industry technical prong. *See* CIB at 8. These claims are reproduced below:

> 1. An electronic camera, comprising:
>
> an imaging device that captures a subject image and outputs image signals;
>
> an image synthesizing device that performs image synthesis to generate a single image by using a plurality of sets of image signals obtained on different exposure values in response to a single imaging instruction by the imaging device;
>
> a control device that determines whether or not to perform the image synthesis with the image synthesizing device based on a predetermined determination condition, and, when it is determined to perform the image synthesis, controls the image synthesizing device so as to perform the image synthesis to achieve an image with wide dynamic range; and
>
> a photometric device that performs a photometric calculation using the image signals, wherein:
>
> the control device decides a number of the plurality of sets of the image signals used for performing the image synthesis based on a difference between a maximum luminance value and a minimum luminance value obtained by the photometric calculation.
>
> . . . .
>
> 14. An electronic camera, comprising:
>
> an imaging device that captures a subject image and outputs image signals;

Maxell, Ltd.
EX2041
Page 27 of 236

[redacted]

> an image synthesizing device that performs image synthesis to generate a single image by using a plurality of sets of image signals obtained on different exposure values by the imaging device;
>
> a photometric device that performs a photometric calculation using the image signals; and
>
> a control device that determines whether or not to perform the image synthesis with the image synthesizing device based on a maximum value or a minimum value of image signals captured by the imaging device in response to an instruction for photography, on an imaging condition based on average brightness of an image obtained by the photometric calculation by the photometric device.

280 patent at cls. 1, 14 (annotated).

C. Claim Construction

The parties identify three claim terms as needing construction. *See* CIB at 12-16; RIB at 9-15.

1. "a difference between a maximum luminance value and a minimum luminance value"

"A difference between a maximum luminance value and a minimum luminance value" appears in claim 1. Maxell contends it should be given its plain and ordinary meaning, which "simply requires the control device to 'decide a number of the plurality of sets of the image signals . . . based on a difference between a maximum . . . and a minimum luminance value obtained by the photometric calculation.'" *See* CIB at 12. Samsung argues that its proposed construction—"a calculation of a difference between a maximum luminance value and a minimum luminance value"—is the plain and ordinary meaning of the term, because the claimed "difference between a maximum luminance value and a minimum luminance value" refers back to the "photometric calculation" recited earlier in the claim. RIB at 9 (citing Hr'g Tr. (Guidash) at 768:1-17, 769:6-12).

Maxell is more persuasive. Starting with the claim language, the claim requires an "electronic camera" with four hardware elements: an "imaging device," an "image synthesizing

Maxell, Ltd.
EX2041
Page 28 of 236

[redacted]

device," a "control device," and a "photometric device." 280 patent at cl. 1. Each hardware device has functional requirements. As relevant to this dispute, first, the photometric device must perform a photometric calculation using image signals output by the imaging device, and "a difference between a maximum luminance value and a minimum luminance value" must be "obtained by the photometric calculation." *Id*. Second, the control device must "decide[]" how many image signals to use for image synthesis "based on" the same "difference between a maximum luminance value and a minimum luminance value obtained by the photometric calculation." *Id*. So Samsung is correct that a photometric calculation is required, but nothing in the claim language requires that calculation to be of the difference in luminance values. *See* RIB at 10. Conceivably the calculation could be of the recited difference, but it could also be of some other quantity, from which the luminance difference is then "obtained."

The specification sheds little light on the issue. Although it teaches a formula for calculating the number of image signals to use for image synthesis, the formula presupposes that the difference in luminance values has already been obtained. *See* 280 patent at 7:55-57. It provides an example where the photometric calculation is used to generate a histogram, where if "the difference between the maximum luminance data Bh and the minimum luminance data Bl of the histogram (FIG. 3) obtained in the above described manner is 8 steps, for instance, . . . the number of images to be obtained for synthesis is given by (difference between Bh and Bl)/(interpolation step) = 8/2 = 4." *Id*. at 7:46-57. And the histogram of Figure 3 is generated by "arranging signals corresponding to each pixel position in order of brightness," with the highest brightness, or luminance, designated by Bh and the lowest by Bl:

[redacted]

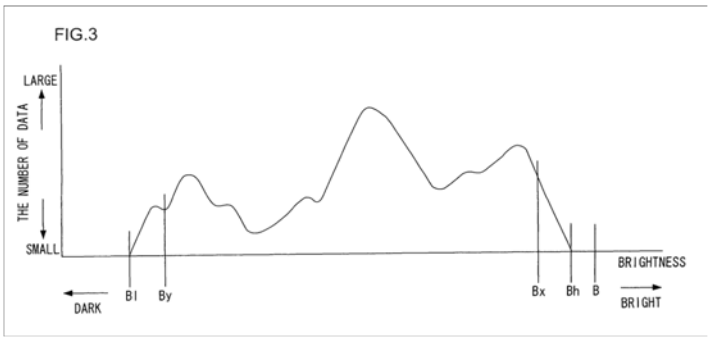

Id. at 6:31-32 & Fig. 3. But it is unclear both how Bh and Bl are identified, and how the difference between them is obtained.

Obviously one possibility for the latter is direct calculation of the difference: Bh minus Bl. Another possibility, however, is that the generated histogram includes pixels of every brightness detectable by the camera, such that in Figure 3 the histogram would extend all the way from left to right on the x-axis. *See* 280 patent at Fig. 3. In that case there is no need to "calculate" a luminance difference, because it could be obtained by referring to data stored in memory about the maximum width of the histogram. Samsung is thus incorrect that the luminance difference must always be "calculated" to be "obtained," and to the extent Samsung relies on extrinsic evidence (such as expert testimony), that evidence has been considered but is given minimal weight. *See* RIB at 9-11; RRB at 4-5.

Accordingly, the term "a difference between a maximum luminance value and a minimum luminance value" is construed as "an obtained difference between a maximum luminance value and a minimum luminance value," with no requirement that the difference be "calculated."

2. "maximum value or a minimum value of image signals"

"A maximum value or a minimum value of image signals" appears in the body of claim 14 within the longer phrase "a control device that determines whether or not to perform the image synthesis with the image synthesizing device based on a maximum value or a minimum value of

image signals captured by the imaging device in response to an instruction for photography." Maxell contends that "image signals" may refer to "frames" rather than a characteristic such as brightness or luminance, such that the phrase "a maximum value or a minimum value of image signals" can be interpreted as "a maximum number or a minimum number of frames." *See* CIB at 13-15. Samsung contends that the phrase means a "detected maximum value or a minimum value of the brightness or luminance of the image signals." RIB at 11-13.

The claim language sheds light on this. Claim 14 recites, again: "a control device that determines whether or not to perform the image synthesis with the image synthesizing device based on a maximum value or a minimum value of image signals captured by the imaging device in response to an instruction for photography." 280 patent at cl. 14. Claims 15 and 16, which depend from claim 14, each recite that "the control device determines whether or not to perform the image synthesis according to a number of image signals" that (exceed/fall short of) "a first predetermined value" (claim 15) or "a second predetermined value" (claim 16). 280 patent at cls. 15, 16. Assuming the term "value" is used consistently between all three claims, the language plainly distinguishes between a "value" of image signals and a "number" of image signals. So the claim language does not support a construction as broad as Maxell seeks.

Nor does the specification. The decision whether to perform image synthesis is described in column 7:

> If neither . . . whiteout nor blackout occurs in the pixel signals of the first live preview image . . . the CPU 21 makes a negative determination . . .. [This is] a case in which the CPU 21 determines that synthesis is not necessary.
>
> If at least one of the above described whiteout and blackout occurs in the pixel signals . . . the CPU 21 makes an affirmative determination . . . that synthesis is necessary.

280 patent at 7:28-42. Whether synthesis is performed is thus based on whether the preview image

[redacted]

experiences whiteout or blackout, that is, overexposure or underexposure, and not on the number of frames. *See id*. at 6:52-7:27. And as relevant to claims 15 and 16, whiteout and blackout are determined based on the "number of data" points "not less than a predetermined number" at a certain brightness or darkness, as shown by Bx (whiteout) and By (blackout) in Figure 3. *Id*.; *see* Fig. 3. This, too, has no connection to the number of frames.

Maxell cites the 280 patent at 6:11-13, which recites: "In the step S20, the CPU 21 performs an auto exposure (AE) calculation based on an image signal value that makes up the live preview image." Maxell interprets this passage as "identifying an image signal value" as "a frame." CIB at 13. But "image signal value" more naturally refers to an extracted piece of data, such as average brightness, rather than a frame, which Maxell has already equated to an "image signal" without a value. Indeed, the very next line of the specification recites: "With this auto exposure calculation, imaging conditions (i.e., imaging sensitivity, storage time, and aperture) are decided based on, for example, average brightness of image," suggesting that the "image signal value" is "average brightness of image." 280 patent at 6:14-17.

Maxell further cites the following passage in support of a broad construction:

> It should be understood that since the electronic camera performs photometric calculation using a signal value that makes up live preview image, it adjusts the imaging sensitivity at the time of obtaining live preview image appropriately according to the signal value obtained in a previous frame.

280 patent at 5:60-65; *see* CIB at 14. This passage does support interpreting "signal value" as a characteristic of the data in the image signal, that is, the frame. But it is not consistent with "signal value" correlating with the number of frames, because it is unclear why the electronic camera would adjust the imaging sensitivity "appropriately" if the "signal value" did not refer to a characteristic such as brightness or luminance rather than merely the number of frames.

Maxell also cites the 280 patent at 7:43-46, which recites:

[redacted]

> In the step S50, the CPU 21 decides synthesis conditions. The synthesis conditions include the number of images obtained for synthesis and imaging conditions at the time of obtaining each of the images.

CIB at 14. But this refers to an output of the CPU after determining synthesis, rather a condition on whether to perform image synthesis. This can clearly be seen in Figure 2, where step S50 occurs after the CPU has already determined that synthesis is necessary.

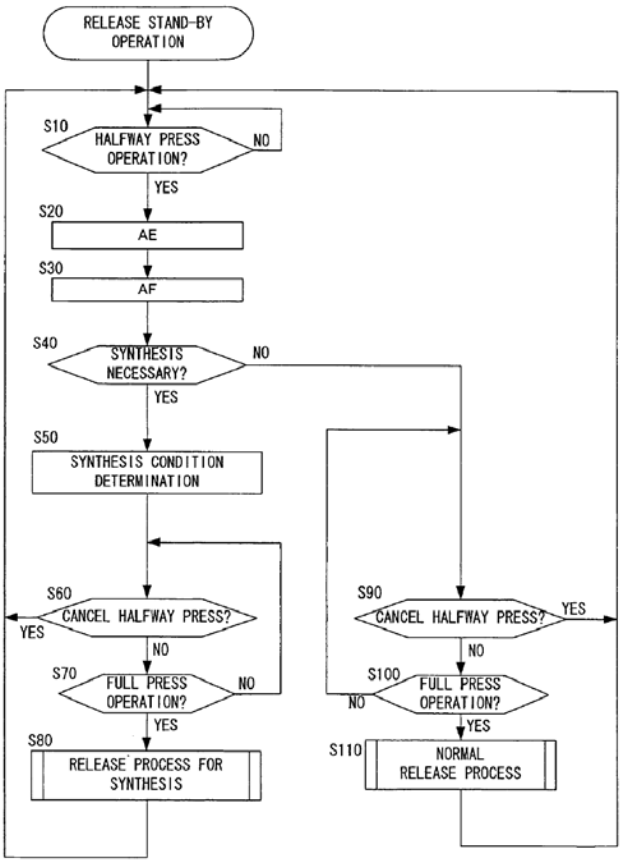

280 patent at Fig. 2. Maxell further cites the 280 patent in a passage describing details of Step S80, the release process for synthesis. CIB at 14 (citing 280 patent at 9:22-34). As shown above, step S80 also occurs only after the CPU has already determined that synthesis is necessary.

Samsung, by contrast, argues that the claimed maximum or minimum "value" can only be image signal brightness or luminance. *See* RIB at 11-13. Samsung is correct that brightness is the only calculation the specification cites as an input to the synthesis decision at step S40. *See id.* at

[redacted]

12. But brightness is plotted as a histogram, and a histogram could conceivably convey other information, including maximum, minimum, mean, and mode, as well as the brightness standard deviation and the number of brightness peaks. *See, e.g.*, CX-0387 (MAXELL_SAMSUNG_0179117) (showing an S25 histogram in the upper right of the image screen). Moreover, Maxell cites to a passage where exposure value seems to qualify as the value. *See* CIB at 14 (citing 6:11-13 and 7:35-8:27; Tr. (Mansoorian) at 423:1-6). Although that passage's calculation, which the specification calls "auto exposure (AE) calculation," occurs at step S20, before the decision is made whether or not to perform image synthesis at step S40, nothing in the intrinsic evidence clearly prohibits that calculation from being the claimed "value." 280 patent at 6:11-13, Fig. 2. So the intrinsic evidence does not rule out using, say, the difference between maximum and minimum brightness or the calculated exposure value as the "image signal value" in claim 14.

Accordingly, "a maximum value or a minimum value of image signals" means "a maximum value or a minimum value of a characteristic of the image signals, including exposure value," and does not encompass the "value" being the "number" or "quantity" of image signals.

3. "in response to an instruction for photography"

"In response to an instruction for photography" appears in claim 14. Maxell argues the construction should be "when an instruction for capturing one or more photographs is provided." CIB at 15. Samsung argues the construction should be "in response to a specific instruction to take a photograph," with an emphasis on "specific." *See* RIB at 13.

The language in claim 14 is not especially helpful:

> . . . a control device that determines whether or not to perform the image synthesis with the image synthesizing device based on a maximum value or a minimum value of image signals captured by the imaging device in response to an instruction for photography, on an imaging condition based on average brightness of an image obtained by the photometric calculation by the photometric device.

280 patent at cl. 14. Samsung cites to Claim 10 in support of its proposed construction, but that

[redacted]

claim merely recites a decision to perform image synthesis before the instruction for photography:

> 10. An electronic camera according to claim 2, wherein:
>
> the control device determines whether or not to perform the image synthesis with the image synthesizing device based on a brightness distribution of a live preview image obtained before an instruction for photography by the photometric calculation.

280 patent at cl. 10; *see* RIB at 14.

The specification is more helpful, and supports a broad interpretation. At least a half press of the shutter button and a full press of the shutter button are contemplated as part of the overall image synthesis process:

> Each of the halfway press switch 19a and the full press switch 19b outputs an ON signal to the CPU 21 in conjunction with a pressing operation of a release button (not figured herein). The ON signal from the switch 19a (halfway press operation signal) is output when the release button is pressed about halfway down of a normal stroke, and the output of the signal is cancelled when the press operation with halfway stroke is cancelled. The ON signal from the switch 19b (full press operation signal) is output when the release button is fully pressed down, and the output of the signal is cancelled when the press operation with a full stroke is cancelled. The halfway press operation signal directs the CPU 21 to start preparing to image. The full press operation signal directs the CPU 21 to start obtaining images for recording.

280 patent at 4:37-50. Samsung argues from this that "the instruction to take a photograph occurs only when the release button is fully pressed down," but the claim scope is of course not limited to the embodiments disclosed in the specification. RIB at 14. There would seem to be no barrier to using a shutter button half press to "start obtaining images for recording," and some other button or control to "start preparing to image." 280 patent at 4:37-50. And another passage explains that "[i]n the step S82, the CPU 21 causes the image sensor 12 to capture images." 280 patent at 9:15-17. As the control device, the CPU would likely need to have an external instruction (such as the press of a shutter button) to direct it to instruct the image sensor to capture images, but nothing in the specification limits what that instruction might comprise.

The specification's description of step S82 is so general, in fact, that "in response to an instruction for photography" might refer simply to "captured by the imaging device" rather than to the control device's "determin[ation]." That is, the claim could be read as either "a control device that determines whether or not to perform the image synthesis . . . in response to an instruction for photography," or "a control device that determines whether or not to perform the image synthesis . . . based on . . . image signals [that, in response to an instruction for photography, have been] captured by the image device." Under the first reading the image synthesis determination is made in response to an external instruction for photography, while under the second reading the image signals are captured first, followed by an image synthesis determination based on the maximum or minimum values of the image signals. Either reading would seem to be a fair interpretation of the claim language in light of the intrinsic evidence. On that basis, a broad interpretation is in order, and of the parties' two proposals, Maxell's is the broader and encompasses the possibility that the instruction for photography comes before the control device's determination to perform image synthesis.

Accordingly, "in response to an instruction for photography" means "when an instruction for capturing one or more photographs is provided."

D. Infringement

In support of its infringement theories, Maxell generally relies on testimony from its expert, Dr. Barmak Mansoorian. *See generally* CIB at 16-32. The parties stipulated that the Samsung Galaxy S25 is representative of all accused products under the 280 patent. *See* JX-0013C at 2. Maxell has not shown infringement of claims 1 or 14 by the Accused Products.

1. Claim 1

For reference, claim 1 of the 280 patent requires:

1. [1pre] An electronic camera, comprising:

[redacted]

> [1a] an imaging device that captures a subject image and outputs image signals;
>
> [1b] an image synthesizing device that performs image synthesis to generate a single image by using a plurality of sets of image signals obtained on different exposure values in response to a single imaging instruction by the imaging device;
>
> [1c] a control device that determines whether or not to perform the image synthesis with the image synthesizing device based on a predetermined determination condition, and, when it is determined to perform the image synthesis, controls the image synthesizing device so as to perform the image synthesis to achieve an image with wide dynamic range; and
>
> [1d] a photometric device that performs a photometric calculation using the image signals, wherein:
>
> [1e] the control device decides a number of the plurality of sets of the image signals used for performing the image synthesis based on a difference between a maximum luminance value and a minimum luminance value obtained by the photometric calculation.

280 patent at cl. 1 (annotated).

a. Elements [1pre] through [1d]

Dr. Mansoorian testified that the Galaxy S25 has multiple cameras and image sensors for capturing images and outputting "frames," which he equates to image signals. *See* Hr'g Tr. (Mansoorian) at 371:14-22. He further testified that it has software [redacted] and one or more image signal processors ("ISP") [redacted] and combined with the image sensors, either alone or collectively, these features perform image synthesis "via high dynamic range," or "HDR," in "photo mode" to generate a single image file. *Id*. at 373:24-374:12. According to Dr. Mansoorian, [redacted]. *See id*. Samsung agrees that in implementing HDR the Galaxy S25 performs image synthesis when a user presses the shutter, resulting in a single image, and does not expressly contest claim elements [1pre], [1a], or [1b]. *See* RIB at 16.

[redacted]

As for element [1c], Dr. Mansoorian testified that the Galaxy S25 has an application processor ("AP") which, in conjunction with the camera application, determines whether or not to perform HDR. *See* Hr'g Tr. (Mansoorian) at 396:9-22. Implementing HDR results in "enhanced image quality" in a "high dynamic range environment." *Id*. at 390:22-391:6 (citing CDX-0006C.40). The decision to perform HDR is based on multiple possible predetermined conditions, including maximum or minimum exposure value, the number of frames, [redacted] *See id.* at 396:9-22. [redacted] and does not expressly contest claim element [1c]. RIB at 16.

And as for element [1d], Dr. Mansoorian maps the [redacted]. *See* Hr'g Tr. (Mansoorian) at 400:7-401:21, 407:3-10. Samsung agrees that [redacted] and does not expressly contest claim element [1d]. RIB at 16.

b. Element [1e]

Limitation [1e] is in dispute, however. That limitation recites: "the control device decides a number of the plurality of sets of the image signals used for performing the image synthesis based on a difference between a maximum luminance value and a minimum luminance value obtained by the photometric calculation." That is, (1) the control device must make a decision regarding "a number of the plurality of sets of the image signals used for performing the image synthesis," and (2) the selection of that "number" must be "based on a difference between a maximum luminance value and a minimum luminance value obtained by the photometric calculation." *See generally* 280 patent at cl. 1.

[redacted]

Maxell has made little effort to show that the S25 does either of these things. In the preferred embodiment of the 280 patent, the number decided upon is found by halving the luminance difference (Bh minus Bl) as measured in "steps," that is, a ratio of luminance difference to another number. 280 patent at 7:46-57. According to Samsung, [redacted] RIB at 21. Samsung's expert Dr. Schonfeld went through two source code-based examples of such a determination, [redacted] (*see* Hr'g Tr. (Schonfeld) at 1295:2-23) [redacted] (*see id*. at 1295:24-1296:8). Mr. Jong Hyub Lee, a Samsung engineer, similarly testified that [redacted] JX-0015C (Lee) at 14:1-2. Maxell agrees that [redacted] CIB at 24 (citing Hr'g Tr. (Schonfeld) at 1293:22-1296:8). Maxell cites no evidence that [redacted] *See* CIB at 22-26; CRB at 19-23; *but see* CIB at 31 (arguing that as relevant to claim 14 the S25 performs image synthesis [redacted]).

The problem for Maxell is that it never really explains how the choice [redacted] is made. Most of its post-hearing briefing relating to "decid[ing]" focuses on the choice of which frames to use, not on the choice of the "number" of frames to use. *E.g*., CIB at 25 ("the phone captures frames with varied brightness levels, measures the difference between the darkest and brightest of those frames, and then uses such difference to decide which frames to combine"). Maxell does not expressly dispute that the "shot count" is the claimed number, and it identifies a parameter called [redacted] but it never discusses exactly how the either the shot count or the maximum are determined. *Id*. at 24-25 (citing Hr'g Tr. (Mansoorian) at 383:1-6). Dr. Mansoorian's testimony on this point is largely

conclusory, and to the extent he does explain the "decid[ing]" process, he appears to opine that *See* Hr'g Tr. (Mansoorian) at 411:10-23; *see also* Hr'g Tr. (Schonfeld) at 1311:5-16 ( ).

In fact, Dr. Mansoorian's opinion is not supported by the totality of the evidence. As noted, Samsung's witnesses testified Moreover, Maxell equates a "set" of image signals to "at least two frames," so necessarily can have *See* CIB at 20. Therefore, the S25 only decides which does not qualify as a "plurality of sets of image signals," and a which does. 280 patent at cl. 1. Equating the decision to to "decid[ing] a number of the plurality of sets of the image signals," the number decided upon is always *Id*. And in the latter case there is no plurality, so element [1b] is not satisfied.

Admittedly, Samsung does not advance this precise argument, so it is not dispositive. Samsung does, however, correctly argue that Maxell "does not identify where or how" the S25 "determines the number of frames used for image synthesis." RRB at 10. It is Maxell's burden to show that "a number of the plurality of sets of the image signals" is decided by the control device, and at best it can be inferred that, if there is a decision at all, it is somehow a choice Maxell's burden has been carried on this first part of limitation [1e] only weakly, if at all.

It completely fails to carry its burden, however, with respect to the second part of limitation [1e], which requires the number decided upon to be "based on" a luminance value difference.

[redacted]

Maxell seemingly does not dispute that in operation the S25 "determines to perform image synthesis" by calculating [redacted] and more precisely [redacted] CRB at 22. Mr. Lee so testified. *See* Hr'g Tr. (Lee) at 1256:25-1257:4 [redacted]). From this, Maxell argues that "a difference between a maximum luminance value and a minimum luminance value is obtained based on a [redacted] CRB at 22.

But Maxell does not explain how a luminance difference is obtained from a [redacted]. The difference between maximum and minimum brightness is determined by subtraction; [redacted] There is no reason to calculate the difference between maximum and minimum brightness if what is actually needed is [redacted]. Nor is there record evidence that the maximum/minimum difference is ever used in any way in deciding the number of frames to use for image synthesis, other than Dr. Mansoorian's conclusory testimony. *See* Hr'g Tr. (Mansoorian) at 411:10-414:24.

The maximum/minimum difference may or may not be obtainable from the brightness distribution, and the parties spend considerable effort disputing whether this is so. Samsung takes the position that the S25 uses a [redacted] *See* RIB at 20-21. Maxell agrees that the S25 generates a histogram (*see* CIB at 25), although it disputes whether the histogram is [redacted] (*see* CRB at 20), and it argues that the difference between maximum and minimum luminance is obtainable from the generated histogram, whether [redacted] or not (*see* CRB at 20-22). This dispute, and the related claim construction dispute over "calculated" versus "obtained," are beside

the point, at least for infringement, because Maxell never explains how the maximum/minimum difference is obtained, or how that difference is used to decide the number of frames for image synthesis. Similarly beside the point are the parties' arguments about whether element [1e] appears in the prior art. *See* CRB at 21-22.

In sum, Maxell has not shown that the Galaxy S25 practices element [1e]. Accordingly, Maxell has not shown infringement of claim 1 of the 280 patent by the representative accused product.

2. Claim 14

For reference, claim 14 of the 280 patent requires:

> 14. [14pre] An electronic camera, comprising:
>
> [14a] an imaging device that captures a subject image and outputs image signals;
>
> [14b] an image synthesizing device that performs image synthesis to generate a single image by using a plurality of sets of image signals obtained on different exposure values by the imaging device;
>
> [14c] a photometric device that performs a photometric calculation using the image signals; and
>
> [14d] a control device that determines whether or not to perform the image synthesis with the image synthesizing device based on a maximum value or a minimum value of image signals captured by the imaging device in response to an instruction for photography, on an imaging condition based on average brightness of an image obtained by the photometric calculation by the photometric device.

280 patent at cl.14 (annotated). Limitations [14pre], [14a], [14b], and [14c] are at least as broad as elements [1pre] through [1d], and Samsung presents no separate disputes over them, so they are found in the Galaxy S25 for the reasons discussed above. *See* RIB at 22-25; RRB at 11-12.

Limitation [14d] is in dispute, however, especially regarding the two portions of the limitation construed above, and the dispute is puzzlingly narrow. The clause "on an imaging condition based on average brightness of an image obtained by the photometric calculation by the

[redacted]

photometric device" is apparently ungrammatical (it should probably read "based on an imaging condition," as discussed below) and thus unclear. Neither party attempts to explain what it means, or explicitly attempts to show whether or not the S25 satisfies it. *See* CIB at 28-32; RIB at 22-25. Maxell in particular barely even cites the clause in specifically addressing the requirements of limitation [14d]. *See* CIB at 28-32.

This oversight is not dispositive, however, because elsewhere the parties seem to suggest that the S25 performs the claimed average brightness calculation, or something close to it. Dr. Mansoorian, for example, testified that "really all cameras" at present capture multiple frames at predefined exposure values with "progressively different average brightness," such that the claimed imaging condition is apparently the "exposure value." Hr'g Tr. (Mansoorian) at 356:1-357:12. And Samsung argues, as noted concerning claim 1, that the S25 [redacted] presumably from the photometric measurements, to determine average brightness. *See* RIB at 16, 20-21. So although Maxell has technically not even tried to meet its burden of showing that the entirety of limitation [14d] is practiced by the S25, the evidence that the final clause is so practiced is sufficient to gloss over this gap in Maxell's case.

Other gaps in Maxell's case, though, cannot be glossed over. Maxell has three theories for how the disputed "a maximum value or a minimum value of image signals" portion of limitation [14d] is met, none of which are convincing. One maps the "value of image signals" to the "number [or quantity] of image signals," which as explained does not qualify under the correct claim construction. CIB at 28. A second maps the "value of image signals" to the "brightness or luminance of the frames." *Id*. This mapping fails because Maxell never explains how the maximum or minimum brightness is used to make the decision to perform image synthesis, or indeed, whether maximum or minimum brightness is ever actually determined. *See id*. That the

[redacted]

S25 generates a histogram does not mean that the maximum or minimum values on that histogram are used or determined, even assuming they are "detect[ed]." *Id*.

Maxell's third theory also misses the mark. It argues that "exposure value" qualifies as the image setting value, and the exposure value is set by a lookup table ("LUT"). CIB at 28. Dr. Mansoorian explained that the lookup table sets a single exposure value per frame, which is necessarily both the maximum and minimum value, and the exposure value changes over multiple frames to produce a maximum and minimum value among the collection of frames:

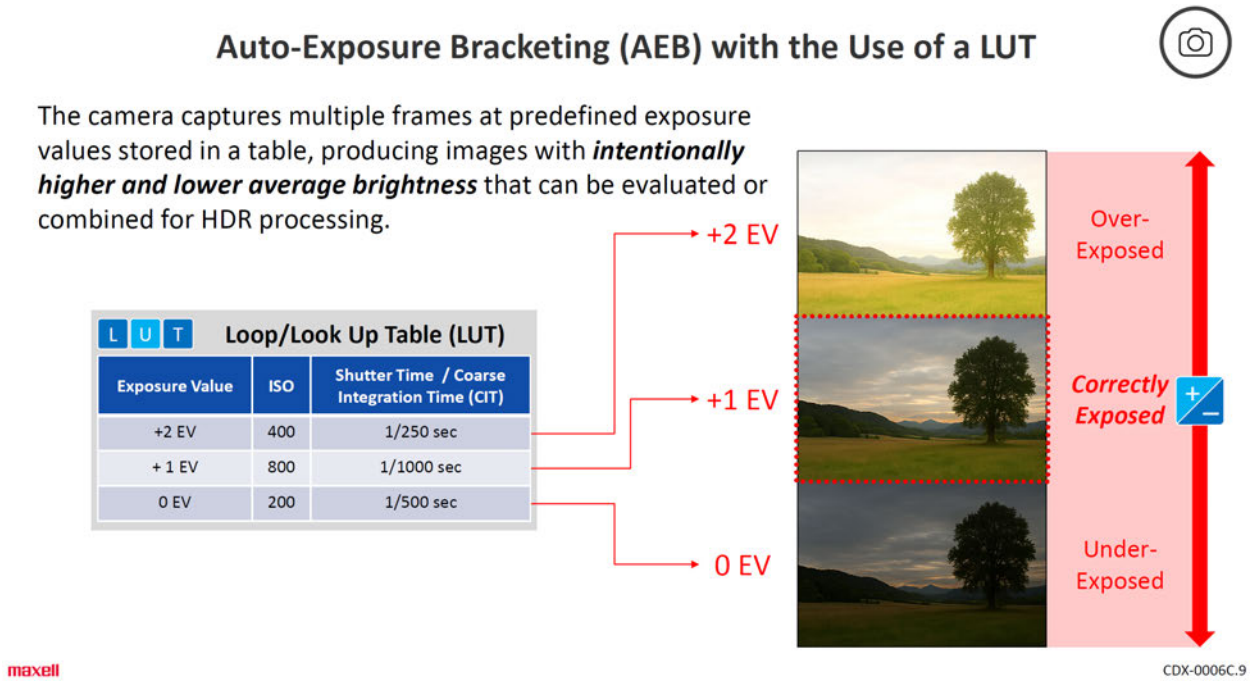

CDX-0006C.9; *see* Hr'g Tr. (Mansoorian) at 424:24-425:11. Maxell never explains, though, how this ties into the decision "whether or not to perform the image synthesis." 280 patent at cl. 14. Dr. Mansoorian's testimony on this point is either full of jargon and hard to follow (*see* Hr'g Tr. (Mansoorian) at 424:24-425:11) or conclusory (*see id*. at 426:5-20), although he at least equates HDR to image synthesis (*see id*. at 426:5-20).

Samsung's witnesses, by contrast, explained plainly and simply how the decision to perform image synthesis, that is, to perform HDR (or MF-HDR), [redacted]

[redacted]

[redacted] *See* Hr'g Tr. (Schonfeld) at 1301:1-1304:12; Hr'g Tr. (Lee) at 1259:16-22, 1264:5-11. Dr. Schonfeld, for instance, opined that "auto exposure . . . has nothing to do with image synthesis" and "[t]he determination in multi-frame HDR . . . is based on various user settings and [redacted]" Hr'g Tr. (Schonfeld) at 1299:25-1300:12, 1301:1-14. In support of this he cited source code, where it is determined whether [redacted] *Id*. at 1301:25-1302:11 (citing CX-0028C.1232). So Maxell has not shown that the first disputed portion of limitation [14d] is satisfied by the S25.

Maxell's arguments for the second disputed portion are more persuasive. Samsung contends that "the relevant instruction is the shutter press." RIB at 23. To be sure, on cross examination Dr. Mansoorian admitted that, according to his expert report, in the S25:

> the control device determines whether or not to perform the image synthesis with the image synthesizing device based on the brightness distribution of a live preview image obtained before an instruction for photography by the photometric calculation.

Hr'g Tr. (Mansoorian) at 456:22-457:8. On direct examination, however, he opined more broadly, without objection, that the "instruction for photography" could be many distinct events, including "requesting the controll[er] to decide whether or not to perform image synthesis." *Id*. at 425:12-426:4. The CPU/controller clearly will not do that without some external request, for example, "open[ing] the camera app," and such an action clearly falls within the broad construction given to "in response to an instruction for photography." Hr'g Tr. (Schonfeld) at 1283:25-1284:5 (citing RDX-0008C.16). And because the decision to perform image synthesis requires capturing at least some images, the capturing of those images—specifically for the purpose of deciding whether to further process some images as part of HDR—qualifies as photography. So Dr. Mansoorian's

[redacted]

opinion that requesting the controller to decide whether or not to perform image synthesis qualifies as "an instruction for photography" is credible, because opening the camera application results in such a request, and a determination by the control device in response to that request meets the definition of "in response to an instruction for photography."

Accordingly, although Maxell has shown that the S25 practices the disputed "in response to an instruction for photography" element, it has not shown that the entirely of limitation [14d] is met by the representative accused product. Maxell has thus not shown infringement of claim 14 of the 280 patent by the representative accused product.

E. Domestic Industry – Technical Prong

In support of its technical prong theories Maxell again generally relies on testimony from Dr. Mansoorian. *See generally* CIB at 32-45. Maxell has not shown the practice of claims 1 or 14 by any DI Product.

1. Representativeness of the 280 DI Products

Maxell asserts that the Moto G 5G (2024) and Moto G Power 5G (2024) are representative of all DI Products. *See* CIB at 33-34. Samsung disagrees, on the ground that Dr. Mansoorian's analysis relied on "general similarities in Android operating systems, chipsets, and use of an [redacted]." RIB at 26-27. According to Samsung, different DI Products use different versions of Android and different chipsets, and camera functionality depends on the particular chipset architecture and software implementation. *Id.* (citing Hr'g Tr. (Schonfeld) at 1315:20-1316:25).

Maxell has met its representativeness burden as it pertains to the functionality at issue in the 280 patent. Samsung quibbles with Dr. Mansoorian's analysis, but he testified that the relevant source code as to a number of the 280 DI Products were [redacted]. Hr'g Tr. (Mansoorian) 364:20-365:19, 454:1-11; CDX-06C.17; CX-0048; *see also* Hr'g Tr. (Mansoorian)

[redacted]

362:17-363:18. Mr. Biggerstaff provided a declaration stating that the 280 DI Products "[redacted]" as the Moto G Power 5G (2024) as it concerns the relevant functionality. CX-0047C (Biggerstaff Decl., ¶¶ 3-6). Samsung's expert, Dr. Schonfeld, testified that he did not identify any specific differences between the Moto G 5G and the Moto G Power 5G and other 280 DI Products. *See* Hr'g Tr. (Schonfeld) at 1333:19-23. And Samsung admits that all DI Products use an "[redacted]." RIB at 26. Therefore, the Moto G 5G (2024) and the Moto G Power 5G (2024) are representative of the 280 DI Products.

2. Claim 1

Dr. Mansoorian testified that the Moto G 5G and Moto G Power 5G ("280 DI representative products") have multiple cameras and image sensors for capturing images and outputting frames, which he again equates to image signals. *See* Hr'g Tr. (Mansoorian) at 372:5-15, 372:22-373:4. He further testified that they have particular chipsets, either from Qualcomm or from MediaTek, as well as [redacted] software, and combined with the image sensors, either alone or collectively, these components perform image synthesis via HDR in photo mode to generate a single image file. *Id*. at 388:4-390:21. According to Dr. Mansoorian, HDR determines the number of "input frames based on [exposure value] counts." *Id*. at 393:7-11. As for element [1c], he testified that the 280 DI representative products have APs in their chipsets, which in conjunction with the camera applications, determine whether or not to perform HDR. *See id*. at 398:8-399:17. And as for element [1d], Dr. Mansoorian maps the photometric device to the image sensors and one or more ISPs, and the output of the photometric calculation to histograms, among other quantities. *See id*. at 407:11-409:2.

Although Samsung does not expressly dispute the presence of elements [1pre], [1a], [1b], [1c], or [1d] in the 280 DI representative products (*see* RIB at 25-28), nowhere does Maxell explicitly argue that the final single image is generated "by using a plurality of sets of image

[redacted]

signals," as required by limitation [1b] (*see* CIB at 32-45). The closest Maxell comes is its assertion that the 280 DI representative products have "image sensors outputting [a] plurality of frames . . . for HDR." CIB at 36. Dr. Mansoorian's testimony on direct similarly missed the mark: "there's an image synthesizing device that uses – calls in multiple frames with different exposure values to generate a single image." Hr'g Tr. (Mansoorian) at 394:19-395:2. On cross examination, however, he agreed that the Moto G Power 5G with a MediaTek chipset performs HDR based on [redacted] frames selected from the brightness distribution of each live preview frame. *See id*. at 456:8-21. How the [redacted] frames are organized to form pluralities of sets is unclear, but because Samsung makes no issue of it, this gap in Maxell's case will be overlooked.

As with infringement, though, Maxell has other gaps that cannot be overlooked. Again, limitation [1e] requires the control device to decide a number of the plurality of sets of image signals to use for image synthesis based on the difference between maximum and minimum luminance. *See* 280 patent at cl. 1. Maxell never clearly explains how this is satisfied in the 280 DI representative products, and its initial brief virtually concedes that the number decided upon is instead based on "[redacted]," whatever those are: "the [redacted] to find out how many input frames [to use] based on [redacted]." CIB at 39. Dr. Mansoorian's opinion on this element was even more vague and conclusory than his corresponding infringement opinion. *See* Hr'g Tr. (Mansoorian) at 414:25-417:21. At best he opined that histograms are generated and that they "include[] a difference of the maximum luminance and minimum luminance value in a frame or across frames," but he did not explain how that difference is used to decide anything. *Id*. at 414:25-415:10.

Dr. Schonfeld, by contrast, clearly and succinctly explained that according to the Motorola source code, which [redacted] 280 DI representative products, the decision to perform image

[redacted]

synthesis happens when the [redacted], and the number of frames to use is "[redacted]":

[redacted]

Hr'g Tr. (Schonfeld) at 1309:6-1311:4 (citing RDX-0008C.55). That file is [redacted] and in the implementations he saw the number was [redacted] generally at [redacted] *Id*. at 1310:13-1311:16. As explained above, [redacted] frames cannot form a plurality of sets of frames. In response, Maxell argues that a decision is made by the control device, namely, to read the number from the [redacted] file, but it is not clear how a decision to [redacted] from a file equates to "decid[ing] a number . . . based on" a luminance difference. *See* CIB at 40. So even assuming that the luminance difference is "necessarily" disclosed by the generated histograms, as Maxell argues, Maxell has not met its burden to show that the luminance difference is used to decide the number of the plurality of sets of frames to use for image synthesis. CRB at 20-23.

In sum, Maxell has not shown that the 280 DI representative products practice element [1e]. Accordingly, Maxell has not shown satisfaction of DI technical prong for claim 1 of the 280 patent by any DI Product.

3. Claim 14

[redacted]

As with infringement, limitations [14pre], [14a], [14b], and [14c] are at least as broad as elements [1pre] through [1d], and Samsung presents no separate disputes over them, so they are found in the 280 DI representative products for the reasons discussed above. *See* RIB at 28-29; RRB at 19-20. In light of the expert testimony and evidence cited, Maxell has thus shown these limitations are met in all the DI Products. *See* CIB at 41-42.

As for limitation [14d], however, Maxell's technical prong case has essentially the same issues as its infringement case. The "in response to an instruction for photography" portion is satisfied, and on the same basis as for infringement, because the "instruction for photography" includes "requesting the controll[er] to decide whether or not to perform image synthesis" by opening the camera application. Hr'g Tr. (Mansoorian) at 425:12-426:4; *see* Hr'g Tr. (Schonfeld) at 1309:12-1310:12 (citing RDX-0008C.54) ([redacted]). And although Maxell again ignores the final clause of limitation [14d], requiring "on an imaging condition based on average brightness," again Samsung makes no issue of it, and Dr. Mansoorian testified in general terms that modern cameras measure average brightness at different exposure values. *See* RIB at 28-29; Hr'g Tr. (Mansoorian) at 356:1-357:12.

This leaves the "a maximum value or a minimum value" portion of limitation [14d]. Maxell asserts two of the same theories it asserted for infringement, namely, (1) maximum/minimum value equates to maximum/minimum exposure value, and (2) the generated histogram "includes the detection of maximum value or minimum value of brightness." CIB at 42. Under the first theory Maxell never explains how exposure value is used to determine whether or not to perform image synthesis. *See id*. at 42-45. Dr. Mansoorian, in fact, admitted on cross examination that the determination whether to perform image synthesis is made "based on the

[redacted]

brightness distribution of a live preview image." Hr'g Tr. (Mansoorian) at 456:22-457:8. To the extent the brightness distribution is presented as a histogram, Dr. Schonfeld agreed. *See* Hr'g Tr. (Schonfeld) at 1310:1-12. And although Dr. Schonfeld did not explain in detail how the determination to perform image synthesis is made in the 280 DI representative products, Maxell argues, and Dr. Mansoorian testified, that [redacted] Hr'g Tr. (Mansoorian) at 426:5-20; *see* CIB at 43. So it is reasonable to assume that [redacted] as in the Accused Products. *See* Hr'g Tr. (Schonfeld) at 1301:1-14. And as with the Accused Products, this does not satisfy the claim language, even under Maxell's second theory for this element, because no maximum or minimum value is used.

Therefore, Maxell has not shown that the 280 DI representative products practice element [14d]. Accordingly, Maxell has not shown satisfaction of DI technical prong for claim 14 of the 280 patent by any DI Product.

F. Validity

Samsung identifies the following invalidity theories for the 280 patent:

Claims	Theory
1	Anticipated under 35 U.S.C. § 102 by Misawa (RX-0007)
14	Rendered obvious under 35 U.S.C. § 103 by Misawa (RX-0007) in view of Yoshida (RX-0014)

See generally RIB at 29-41. U.S. Patent Pub. No. 2006/0067670 ("Misawa") was filed on September 29, 2005, and published on March 30, 2006, and qualifies as prior art at least under 35 U.S.C. § 102(b) (pre-AIA). RIB at 29. U.S. Patent Pub. No. 2004/0095472 ("Yoshida") was filed on April 15, 2003 and published on May 20, 2004, and is also prior art under Section 102(b). RX-

0014. Maxell does not dispute the prior art status of these references. *See generally* CIB at 45-52; CRB at 17-22.

1. Misawa and Claim 1

Misawa discloses a "digital still camera" (RX-0007 at Abstract) having an "imaging device" (*id*. at [0006]), that forms an "optical image of a subject" using a charge coupled device ("CCD") as an "image sensor 12" and transferring "an image signal" to an "image signal processing circuit 35" (*id*. at [0020]). It further discloses a "CPU 18" connected to an "exposure condition decider 49" that together determine "the ratio of the subject brightness distribution to the width of the latitude of the CCD image sensor 12." *Id*. at [0033],]0037]. The "latitude" of the image sensor is "a range from a minimum brightness to a maximum brightness detectable through the image sensor." *Id*. at [0006]. When the subject's brightness distribution is narrower than the latitude, three image frames are taken; when the brightness distribution is wider than the latitude, "the exposure condition decider 49 calculates differences from the proper exposure amount according to the ratio," as well as the "number of image shoots per one image shooting operation." *Id*. at [0036]-[0037]. For instance, if the brightness distribution is three times the latitude, the exposure condition decider "decides three sets of exposure conditions . . . for three times of exposures." *Id*. at [0037]. The brightness distribution is "detect[ed]" by "measuring brightness of an image shooting field" using a "photometry device." *Id*. at [0006].

Misawa, in short, discloses limitations [1pre] (electronic camera), [1a] (imaging device outputting image signals), [1d] (photometric device), and [1e] (deciding the number of pluralities of sets of image signals based on the luminance difference obtained by the photometry calculation). *See* 280 patent at cl. 1. Maxell argues that limitation [1a] is not disclosed because Misawa uses the term "image signal" in the singular, as opposed to "image signals," as the claim recites. *See* CIB at 45. But Samsung maps "image signal" to "pixel," and Misawa describes "extract[ing]

[redacted]

brightness data of each pixel to measure the brightness of the image shooting field," that is, multiple pixels/image signals are disclosed. RX-0007 at [0029]; *see* RIB at 29-30. Samsung also maps the "control device" to Misawa's CPU and exposure condition decider, which determine whether or not to perform image synthesis based on the brightness distribution/latitude ratio, so Misawa also teaches the first part of limitation [1c]. *See* RIB at 32-34.

Part of limitation [1c], and the bulk of limitation [1b], however, are not described in Misawa. Samsung maps the "image synthesizing device" to a combination of the CPU and the "image signal processing circuit," and principally relies on one paragraph in Misawa and the testimony of its expert, Mr. R. Michael Guidash. *See* RIB at 30-32 (citing Hr'g Tr. (Guidash) at 778:1-20). The relevant passage states:

> As the number of shoots and a constant difference in exposure amount between these exposures are calculated, exposure conditions are determined to cover a high brightness range, a middle brightness range and a low brightness range of the image shooting field respectively in the latitude of the CCD image sensor 12. Then the corresponding number of image frames to the determined shooting number are captured and recorded under the different exposure conditions. The image frames obtained sequentially from the same subject in this way are processed or edited through a personal computer or the like, to synthesize properly exposed portions of the respective image frames to compose an image with a high gradation reproduction. If one of the images contains a properly exposed main subject, the one image is used without making any image composition. It is possible to configure the digital camera so as to execute the image composing inside the camera.

RX-0007 at [0037]. Mr. Guidash emphasized that the last sentence discloses "configur[ing] the digital camera so as to execute the image composing inside the camera," where "composing" equates to "image synthesis." *See* Hr'g Tr. (Guidash) at 779:12-780:1 (citing RX-0007 at [0037]).

As Maxell points out, though, Misawa does not actually describe how the image synthesis is performed, or what components of the disclosed digital camera could be "configure[d]" to perform it. *See* CIB at 46-47. In fact, Misawa is notably vague on this point. It teaches that the

"image frames" are "processed or edited through a personal computer or the like," but does not teach how the processing or editing is done. RX-0007 at [0037]. It states that it is "possible to configure the digital camera" to perform image synthesis, but does not explain how to so configure it. *Id*. Claim 6 of Misawa describes "a signal processing device for composing image signals . . . to obtain an image with a high gradation reproduction," but there is no description of how that composition is executed in the signal processing device. RX-0007 at cl. 6. Even accepting Mr. Guidash's testimony that the multiple "frames" of Misawa equates to the "plurality of sets of image signals" of the 280 patent, and accepting Misawa's disclosure of generating a plurality of frames/sets of image signals, Misawa still does not disclose using that plurality for image synthesis, as opposed to some other number or grouping of image signals, because it just does not disclose how to perform image synthesis. *See* Hr'g Tr. (Guidash) at 778:21-779:11. At best Misawa discloses "process[ing] or edit[ing]" an unspecified number of "image frames" to "compose an image." RX-0007 at [0037].

Relatedly, Maxell is correct that any internal "composing is not in response to the shooting operation," that is, Misawa does not clearly disclose "image synthesis" by the camera itself "in response to a single imaging instruction." CIB at 46. Samsung maps the imaging instruction to a full shutter button press (*see* RIB at 31), as does Mr. Guidash (*see* Hr'g Tr. (Guidash) at 780:9-781:1). But because Misawa does not disclose how image synthesis is performed, it similarly does not disclose that the image synthesis is triggered by a shutter button press, or by some other action. Misawa does teach recording "a number of image frames" per shooting operation, that is, per shutter button press, but that does not imply that image synthesis is "performed automatically" following the shutter button press, as Samsung contends. RX-0007 at [0022]; RRB at 21. Thus,

[redacted]

whatever is "configure[d]" to perform image synthesis in Misawa does not clearly perform it "in response to a single imaging instruction," as limitation [1b] requires.

Nor does Misawa disclose what components perform the image synthesis. Its components are generally organized in the form of a CPU connected to various special purpose devices:

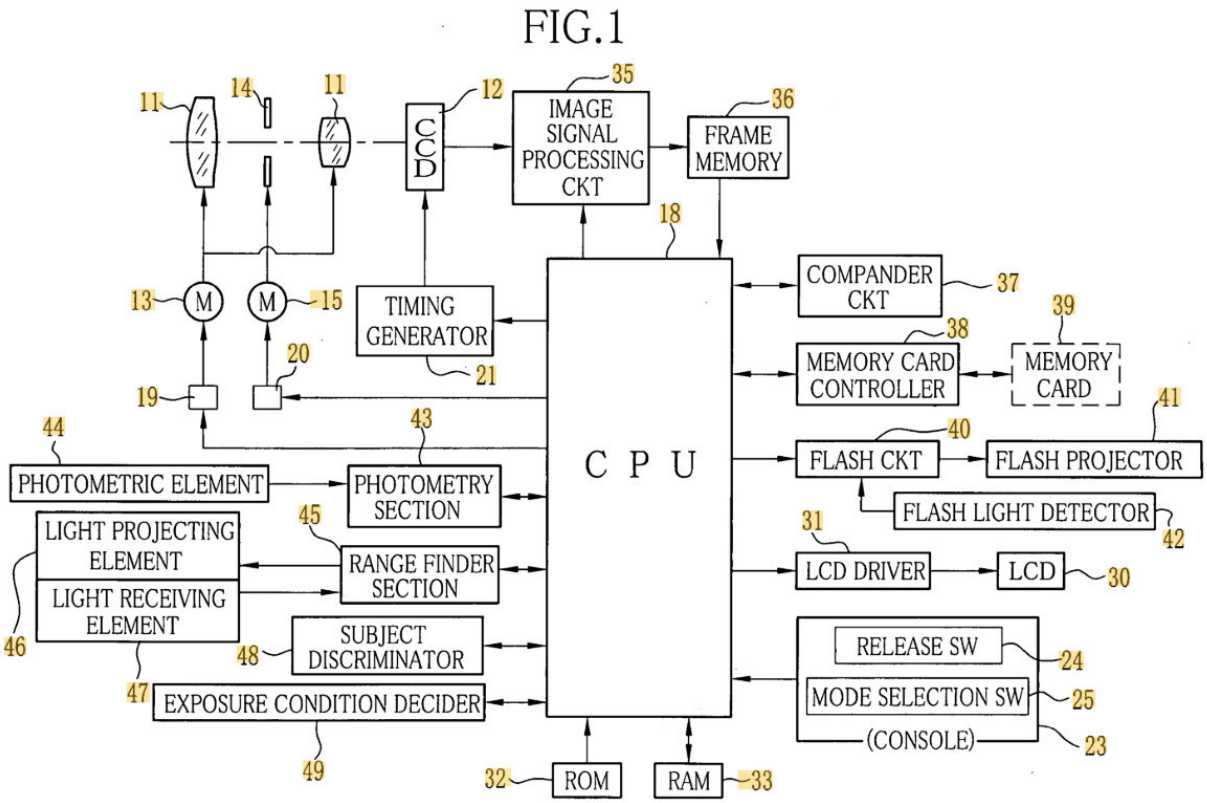

RX-0007 at Fig. 1. Again, Samsung identifies the combination of the CPU 18 and image signal processing circuit 35 as the image synthesizing device. *See* RIB at 30. But the CPU merely "executes control programs . . . so as to control the digital still camera 10 electrically," and the image signal processing circuit receives image signals:

> to be processed for noise-reduction, amplification, gamma-correction, white balance adjustment and other signal processing. The signal processing for correcting image quality, including the gamma-correction and the white balance adjustment, may be skipped by revising set-up conditions. The image signal processing circuit 35 converts the processed image signal into digital image data, and outputs the image data sequentially to a frame memory 36.

RX-0007 at [0024]-[0025]. The image signal processing circuit is certainly a likely candidate for performing image synthesis, because it performs "other signal processing," but image synthesis/image composing is not explicitly one of its functions. *Id*. at [0025].

So neither the CPU nor the image signal processing circuit expressly "synthesize properly exposed portions of the respective image frames to compose an image," or otherwise "perform[] image synthesis." *Id*. at [0037]; 280 patent at cl. 1. It may be "possible to configure" the device of Misawa to perform image synthesis "inside the camera," but that configuration is not expressly taught, so it is not clear that image synthesis is performed by the CPU/image signal processing circuit combination, as opposed to some other component or components. In sum, the "image synthesizing device" of limitation [1b] and the second part of limitation [1c] is not disclosed in Misawa.

Accordingly, although a plurality of sets of image signals and a single imaging instruction are disclosed in Misawa, using that plurality of sets for image synthesis (limitation [1b]) is not, nor is an image synthesizing device that performs image synthesis, in response to the single imaging instruction or otherwise (limitations [1b] and [1c]). Claim 1 of the 280 patent is therefore not anticipated by Misawa.

2. Misawa, Yoshida, and Claim 14

According to Samsung, claim 14 would have been obvious over the combination of Misawa and Yoshida. *See* RIB at 35-41. Like Misawa, Yoshida discloses a still imaging device employing CCDs and image synthesis to achieve a wide dynamic range. *See* RX-0014 at [0003]. Yoshida teaches a "super latitude" mode in which "image signals of a plurality of images each having a different exposure amount" are created, and from that a "synthesis image having a wide dynamic range" is generated by "executing synthesizing processing." *Id*. at [0198]. It also describes calculating a "weighed average value Y of the luminance" of an object in a captured

image, which is used to determine further steps in creating a "synthesis image." *Id*. at [0200], [0205]. And Misawa itself discloses using the "maximum value and minimum value of the brightness" in deciding exposure conditions, as claim 14 requires. RX-0007 at [0043]; *see* Hr'g Tr. (Guidash) at 796:11-20.

Samsung relies on Yoshida mainly to satisfy the final clause of claim 14, "on an imaging condition based on average brightness of an image obtained by the photometric calculation by the photometric device." 280 patent at cl. 14; *see* RIB at 40. As noted, this clause is ungrammatical and unclear; it may be that "*based on* an imaging condition . . ." was the intended language, as Samsung implies, but "on" alone is too general and vague to specify how the "imaging condition based on average brightness" fits into the rest of the claim. RIB at 40 (emphasis added). So although Yoshida does disclose selection of exposure conditions "based on" average brightness, it does not convincingly disclose "determin[ing] whether or not to perform" image synthesis merely "*on* an imaging condition based on average brightness," as required by limitation [14d]. 280 patent at cl. 14 (emphasis added); *see* RX-0014 at [0242]-[0245].

Nor does Yoshida entirely fill in the gaps left empty by Misawa, as Maxell points out. *See* CIB at 48. Claims 1 and 14 do not overlap entirely, but both claims require "an image synthesizing device that performs image synthesis" (limitation [14b]) by "using a plurality of sets of image signals" (limitation [14b]), two limitations not found in Misawa. Yoshida describes "image signal processing" by "digital processing circuit 108" to "create the single image by synthesizing the two original images," which is sufficient disclosure of an "image synthesizing device":

[redacted]

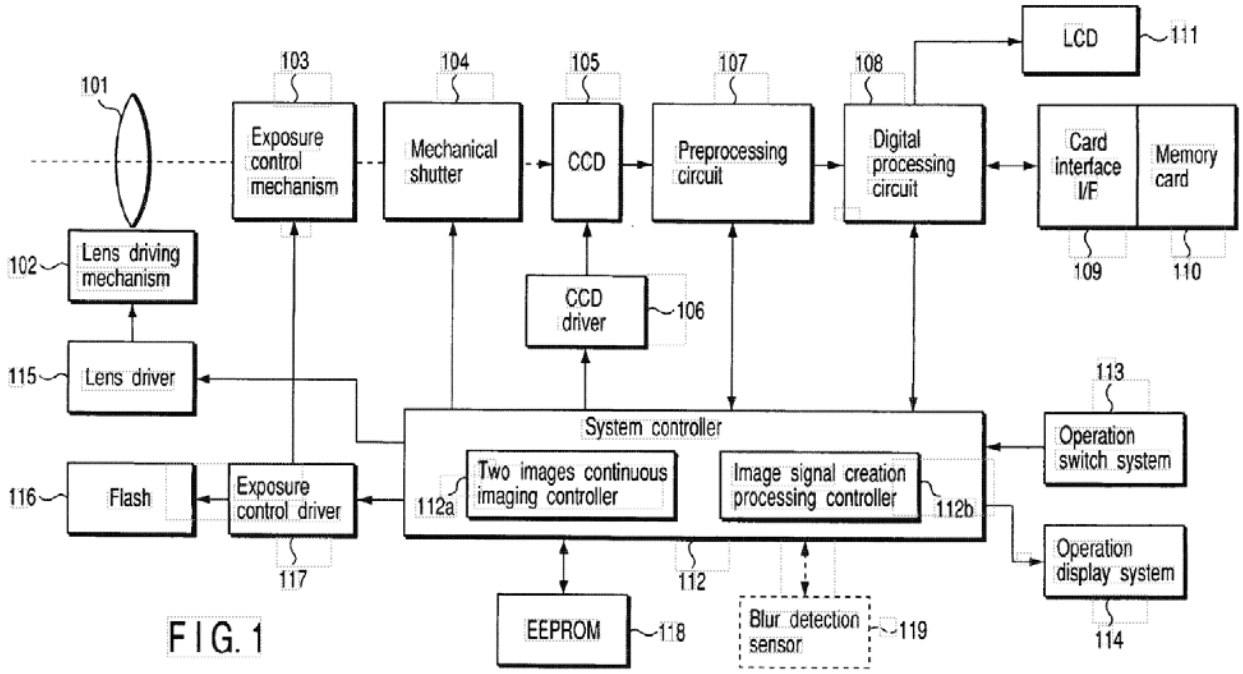

FIG. 1

RX-0014 at [0124], Fig. 1; *see* RIB at 38-39. It does not appear, however, that Yoshida describes "using a plurality of sets of image signals" for image synthesis. It describes using a plurality of images, namely, "three or more images each having a different exposure amount," but it seemingly does not describe grouping those images (or any other image signals) into a plurality of sets. RX-0014 at [0174].

So the combination of Misawa and Yoshida does not clearly and convincingly disclose either image synthesis "using a plurality of sets of image signals" or image synthesis "on an imaging condition based on average brightness of an image obtained by the photometric calculation by the photometric device." And because "the prior art simply does not disclose" these two essential elements of claim 14, the scope and content of the prior art and the differences between the prior art and the claimed invention weigh heavily against obviousness. *In re Vaeck*, 947 F.2d 488, 493 (Fed. Cir. 1991).

Beyond these gaps in the prior art, Maxell argues that Misawa and Yoshida are not analogous art either to each other or to the 280 patent. *See* CIB at 50-52. In particular, Maxell

argues that Misawa and Yoshida have "wholly unrelated goals" and address "distinct particular pertinent problems." *Id*. at 52. This is exaggeration. The 280 patent, Misawa, and Yoshida do all address different problems: the 280 patent focuses on reducing "unnecessary processing" when determining the need for image synthesis (280 patent at 1:17-20), Misawa focuses on reducing memory use by reducing the number of captured images (*see* RX-0007 at [0004]-[0005]), and Yoshida focuses generally on improving image quality and specifically on reducing the effects of "camera shake" (RX-0014 at [0006]). But all concern digital cameras and their processing, including image synthesis using multiple images, measurement of brightness, exposure adjustment, and achievement of dynamic range, and all disclose cameras with CPUs, CCDs, and other hardware components common to digital cameras. They all fall comfortably within the same technical field despite their differences, and as Mr. Guidash testified, Misawa could have been modified to implement Yoshida's teachings with a reasonable expectation of success simply "by updating firmware," so Maxell's argument is not well-taken. Hr'g Tr. (Guidash) at 799:7-21.

Nevertheless, on balance Samsung has not carried its burden to prove obviousness clearly and convincingly. There is a sufficient motivation to combine references, with a reasonable expectation of success, and there are no objective indicia of non-obviousness. *See* CIB at 47-52. But Samsung has not shown the prior art teaches using a plurality of sets of image signals, or image synthesis "on" an imaging condition based on average brightness. That is, even if the level of skill in the art, and the knowledge of a POSITA, would be sufficient to motivate the combination of Misawa and Yoshida, the scope and content of the prior art are inadequate, and the differences between claim 14 and the prior art are too great, to render claim 14 obvious. Samsung thus has not shown that claim 14 of the 280 patent would have been obvious over Misawa in view of Yoshida.

Samsung has accordingly not shown that either asserted claim of the 280 patent is invalid.

V. U.S. PATENT NO. 11,490,004

A. Level of Ordinary Skill in the Art

Maxell contends that a POSITA at the time of invention of the 004 patent would have had at least a bachelor's degree in electrical engineering, computer engineering, computer science, or a related field, with at least two years of experience in the field of image processing in mobile devices, with additional experience substituting for education and vice versa. *See* CIB at 8. Samsung's proposed definition of a POSITA is the same, except it does not specify the subject matter of the POSITA's experience. *See* RIB at 41. Maxell's definition is reasonable and specific and is accordingly adopted.

B. Claims at Issue

Claims 1 and 10 of the 004 patent are at issue in this investigation, either through allegations of infringement or domestic industry technical prong:

> 1. [1pre] A mobile terminal having a first side and a second side opposite to the first side, comprising:
>
> [1a] a first camera included on the first side of the mobile terminal, the first camera configured to generate first image information including still image data and moving image data;
>
> [1b] a second camera included on the second side of the mobile terminal, the second camera configured to generate second image information including still image data and moving image data;
>
> [1c] a third camera included on the second side of the mobile terminal, the third camera configured to generate third image information, wherein the third camera is disposed at a predetermined interval in a longitudinal direction from the second camera;
>
> [1d] an encoder encoding the still image data included in the first image information and the second image information using a first type of compression scheme and further encoding the moving image data included in the second image information using a second type of compression scheme;

[1e] a recording medium recording the encoded still image data and the encoded moving image data;

[1f] a wireless communication circuit for connecting the mobile terminal to the Internet;

[1g] a GPS signal receiver for acquiring position information of the mobile terminal;

[1h] an interface circuit receiving the first image information from the first camera and the second image information from the second camera;

[1i] a proximity sensor generating proximity information;

[1j] a sensor to detect rotation of the mobile terminal;

[1k] a touch panel;

[1l] a display integrated with the touch panel, wherein the display is configured to switch between at least a first state and a second state based on at least the proximity information,

[1m] the display including a first display region and a second display region different from the first display region, the second display region displaying a plurality of settings corresponding to at least one or more of the first camera and the second camera;

[1n] a signal processor which receives the first image information and the second image information via the interface circuit and generates information to be displayed by the display based on one or more of the first image information and the second image information,

[1o] wherein the signal [processor] performs image signal processing on the first image information or the second image information to perform white balance correction;

[1p] a controller that receives the position information from the GPS signal receiver and controls at least the first camera, the second camera, the wireless communication circuit, the display, and the signal processor,

[1q] wherein the plurality of settings include a setting button that is displayed in the second display region and the touch panel detects a touch of a position of the displayed setting button,

[redacted]

> [1r] wherein the display displays a focus setting region frame according to a touch detected by the touch panel in the first display region, and the mobile terminal is configured to move a display position of the focus setting region frame based on the detection of an additional touch in the first display region, and
>
> [1s] wherein the recording medium records still image data included in the first image information or second image information in a format that has not been encoded by the encoder using the first type of compression scheme and the second type of compression scheme.
>
> . . . .
>
> 10. The mobile terminal of claim 1, wherein the second camera generates second image information during the same time period as the third camera generates third image information and the signal processor receives the second image information and the third image information from the interface circuit and performs image processing on the second image information and the third image information such that the display displays image data based on the image processing performed on both the second image information and the third image information.

004 patent at cls. 1 (annotated) and 10; *see* CIB at 52-73.

C. Claim Construction

The parties identify a single claim term as needing construction: "a focus setting region frame," which appears in independent claim 1. *See* CIB at 53-55; RIB at 42-43. Maxell contends it should mean "a visual indication of a region enabling changing of focus settings." CIB at 53. Samsung proposes "an enclosing border for a focus setting region." RIB at 42.

The claim recites:

> . . . wherein the display displays a focus setting region frame according to a touch detected by the touch panel in the first display region, and the mobile terminal is configured to move a display position of the focus setting region frame based on the detection of an additional touch in the first display region, . . .

004 patent at cl. 1. The parties agree that Figure 7A of the specification depicts the focus setting region frame (Figure 7B is to similar effect):

[redacted]

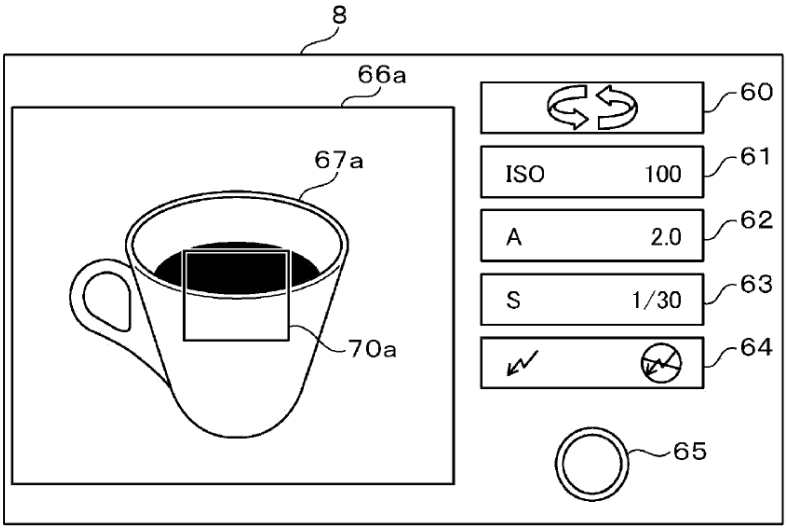

004 patent at Fig. 7A; *see* CIB at 53, RIB at 42. Regarding Figure 7A, the specification recites:

> FIG. 7A is a diagram illustrating an example of a display including a focus setting region frame 70a in a case where the viewer 40 is not mounted. In the display of FIG. 7A, the same displays as those in FIG. 6A are denoted by the same reference numerals, and the descriptions thereof will not be repeated. In the display illustrated in FIG. 6A, for example, once the touch panel 21 detects that an optional position in the display of the imaging region 66a is touched, the control circuit 6 displays the focus setting region frame 70a by focusing on a distance to an imaging target corresponding to the touched position.

Id. at 10:28-38. When a user touches a different spot on the touch pad, "the position of the focus setting region frame" moves. *Id*. at 10:49-50. Maxell also cites claim 8, but that claim is largely irrelevant, and otherwise the parties identify no relevant intrinsic evidence. *See* CIB at 53-55; RIB at 42-43; CRB at 28-30.

Much of the dispute is over whether the claimed "frame" requires an "enclosing border," like the one shown in the preferred embodiment. *See* CRB at 29. The claim requires "display" of a "frame" corresponding to a "focus setting region," where the focus setting region is designated by touching a touch panel. The parties agree that something must be displayed (*see* CIB at 54), and because the purpose of the frame is to show the user the location of the focus setting region (*see* 004 patent at 10:28-38), whatever is displayed must allow the user to see the location of that

region.

The term "frame," in reference to a physical object, often does mean an object with a fully enclosed boundary, such as a picture frame. But even a picture frame does not require a fully enclosed boundary, assuming, say, it can hold its contents just by the corners. This is even more true of digital objects, where a display indicating a region may be defined in a myriad of ways, including only on the corners, or by a dashed boundary line, or by a set of concentric circles like a bullseye, or by two intersecting lines with accompanying hash marks, like a rifle scope. Nothing in the intrinsic evidence requires the frame to have any particular appearance, shape, or boundary, and Maxell is accordingly correct that Samsung's proposal amounts to reading a limitation from the specification (as seen in Fig. 7A, a rectangle) into the claim. *See* CRB at 29 (citing *Playtex Products, Inc. v. Proctor & Gamble Co*., 400 F.3d 901, 906 (Fed. Cir. 2005).

Maxell is also correct that the "frame itself does not enabl[e] focusing" because, as the specification states, the "position" of the focus setting region frame is set "by focusing on a distance to an imaging target corresponding to the touched position." 004 patent at 10:34-38; *see* CRB at 29. A POSITA would surely recognize that a "region" demarcated by a "frame" does not necessarily provide for a proper focus because there may be multiple objects within the region at disparate distances. As Fig. 7A illustrates, if the liquid in the cup (seen in the top of the region/frame) is sufficiently farther away from the camera than the outer surface of the cup (seen in the bottom of the region/frame), then the camera will have to choose between objects for a proper focus. So the term "focus setting region," to a POSITA, cannot mean the region that is focused on—because that makes no sense in the general case—but instead must mean the region containing "an imaging target" the camera focuses on "corresponding to the touched position."

Samsung's proposed construction is therefore overly narrow, and the correct construction

[redacted]

of "a focus setting region frame" must account for the actual operation of the camera, which involves focusing on a "position" within a "region," rather than focusing on the "region" as a whole. Thus, the displayed frame must indicate a region in some fashion, the region must include the "position" of the "imaging target," and that position must "correspond[] to the touched position" as set by the user. With these requirements, Maxell's proposal comes close to the proper construction because it incorporates "visual indication," but it modifies "region" as "region enabling changing of focus settings." Enabling changing of focus settings is already required by other claim language, namely, "configured to move a display position of the focus setting region frame," and it changes the "region" from one associated just with "focus setting" to one associated with "changing of focus settings," which is not what the claim requires.

So the correct construction of "focus setting region frame" includes "visual indication" as the meaning of "frame," but it also includes a "region" for focus setting, that is, containing an imaging target. Given these requirements, the proper construction of "focus setting region frame" is therefore "visual indication of a focus setting region," with the understanding that the focus setting region contains an imaging target.

D. Representativeness of the 004 DI Products

The parties stipulated that the Samsung Galaxy S25 is representative of the Accused Products, and Dr. Wobbrock opined that the Moto G Power 5G (2024) is representative of the 004 DI Products. *See* JX-0013C at 3; Hr'g Tr. (Wobbrock) at 80:19-81:5. Samsung challenges the representativeness of the Moto G Power 5G on four grounds.

First, it observes that Dr. Wobbrock changed his opinion regarding several models of 004 DI Products that Maxell no longer asserts as practicing the 004 patent. *See* RIB at 43-44. This is true, but not especially significant, because Dr. Wobbrock's opinion was formed based on

[redacted]

reviewing source code, among other things, and before he had seen a "physical device." Hr'g Tr. (Wobbrock) at 146:19-147:3. Unsurprisingly, once he was presented with countervailing evidence, he "revise[d] his opinion," as "scientist[s]" do. *Id*. at 145:17-146:2, 147:8-14.

Second, Samsung points out that Dr. Wobbrock did not generally review source code for the 004 DI Products, and thus had "no technical proof" that the Motorola phones operate the same way. RIB at 44. It is unclear, however, why source code is necessary if other forms of evidence are sufficient to show the practice of a particular limitation. Samsung cites "internal image processing and encoder functionality," for instance, but Dr. Wobbrock explained that these features could be understood using what he reviewed, including "Android requirement specifications, chipset data sheets," the testimony of Mr. Biggerstaff, the director of the relevant Motorola engineering division, and "user guides." Hr'g Tr. (Wobbrock) at 81:6-82:18. Mr. Biggerstaff, in particular, testified that the 004 DI Products [redacted], which would seem to be sufficient. *See id*. (citing CX-0047C at 2).

Third, Samsung asserts that the processing architecture in different 004 DI Products may "vary significantly" because they do not all use the same chipset. RIB at 44-45. But again, Dr. Wobbrock relied on the chipset data sheets, and the claim requirements are at a high enough level of generality that the different architecture of different chipsets would not seem to make any difference. Certainly Samsung's own expert, Dr. Hu, could not identify any relevant differences. *See* Hr'g Tr. (Hu) at 1157:19-1158:12.

Lastly, Samsung argues that Dr. Wobbrock's opinion is conclusory, some of the evidence he relied on was not relevant, and other evidence he relied on did not address all claim elements. *See* RIB at 45. On the whole, however, Dr. Wobbrock's is adequately supported, and again, Samsung offers no particularized countervailing evidence.

[redacted]

Accordingly, Maxell has demonstrated that the Moto G Power 5G (2024) is representative of the 004 DI Products.

E. Infringement and Technical Prong of Domestic Industry

1. Claim 1

Maxell's cases for infringement and DI technical prong are presented together. *See* CIB at 56-73. In support of its theories, Maxell generally relies on testimony from its expert, Dr. Wobbrock, source code and technical documents, and testing performed by Dr. Wobbrock. *See generally* CIB at 56-72.

a. Limitation [1d]

Samsung does not dispute the satisfaction of limitations [1pre]-[1c] by the Accused Products or the 004 DI Products. *See* RIB at 45-53; RRB at 30-38. In light of the expert testimony and evidence cited, Maxell has shown these limitations are met. *See* CIB at 56-57; Hr'g Tr. (Wobbrock) at 83:25-87:19, 99:16-100:6. In particular, the Accused Products and 004 DI Products are all cellular telephones (mobile terminals) ([1pre]) comprising three cameras, one on one side of the phone and at least two on the other side, each generating still and moving image data ([1a], [1b], and [1c]):

[redacted]

CX-0032C.007 (S25 User Guide)

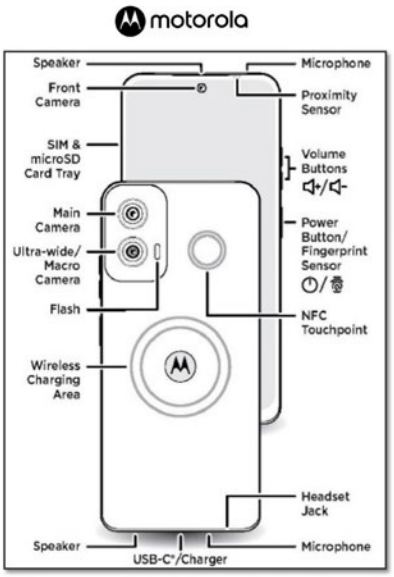

CX-0049C.004 (Moto G Power 5G User Guide)

CDX-0003C.18

CX-0032C.007; CX-0049C.004; *see* Hr'g Tr. (Wobbrock) at 83:25-87:19, 99:16-100:6.

Limitation [1d] is in dispute, however. Limitation [1d] recites: "an encoder encoding the still image data included in the first image information and the second image information using a first type of compression scheme and further encoding the moving image data included in the second image information using a second type of compression scheme." Maxell maps the encoder to a system on chip, [redacted] and maps the first and second compression schemes to JPEG and MPEG, respectively. *See* CIB at 57 (citing Hr'g Tr. (Wobbrock) at 87:24-91:10). Dr. Wobbrock's testing showed that both the Accused Products and the 004 DI Products encode the image information, using the claimed encoder and compression schemes, according to the requirements of limitation [1d]. *See* Hr'g Tr. (Wobbrock) at 91:14-93:9.

Samsung raises several points in opposition, none of which are persuasive. As to the 004 DI Products, it argues that JPEG and MPEG encoding occur on "separate hardware components," and so are not performed on a single encoder. RIB at 49. But the two hardware components,

which Samsung identifies as a for still image processing and a " " for moving image processing, are plainly both on the same MediaTek system on chip, which is what Maxell identifies as the encoder. *See* RX-0609C at 10; RIB at 49. As to the Accused Products, although the parties apparently dispute which subcomponents carry out the processing, both Dr. Wobbrock and Dr. Hu identified what they opined are the respective relevant subcomponents, *See* Hr'g Tr. (Wobbrock) at 159:12-160:13; Hr'g Tr. (Hu) at 1161:5-18. Dr. Hu's annotation diagram shows that, even under her understanding of the encoding,

RDX-0007C.15. Samsung also makes the undisputed point that the , but this has no bearing on whether the

[redacted]. *See* RIB at 47-48. And the fact that [redacted] is similarly irrelevant. *See id*. at 46-48. In short, Maxell has shown that the Accused Products and 004 DI Products practice limitation [1d].

b. Limitations [1n] and [1o]

Samsung does not dispute the satisfaction of limitations [1e]-[1m] by the Accused Products or the 004 DI Products. *See* RIB at 45-53; RRB at 30-38. In light of the expert testimony and evidence cited, Maxell has shown these limitations are met. *See* CIB at 62-65; Hr'g Tr. (Wobbrock) at 93:10-107:5. In particular, the Accused Products and 004 DI Products each have a memory for recording the encoded still and moving image data ([1e]), a wireless communication circuit for connecting to the internet ([1f]), a GPS receiver for acquiring the mobile terminal's position information ([1g]), an interface circuit for receiving the first and second image information from the first and second cameras ([1h]), a proximity sensor ([1i]), a rotation sensor ([1j]), and a touch panel ([1k]). *See* Hr'g Tr. (Wobbrock) at 93:10-107:5. They each have a display integrated with the touch panel configured to switch between two states based on proximity information ([1l]), namely, for both the Accused Products and the 004 DI Products, the displays turn on and off depending on the proximity of an object to the proximity sensor on the front of the smartphone. *See id*. at 107:6-109:4. And their displays each have a first region and a second region, different from each other, with the second region displaying a plurality of settings corresponding to at least one of the cameras ([1m]), namely, two display regions disposed vertically relative to each other on the front of the smartphone, with the smaller region of the two containing multiple icons reflecting various camera settings and parameters:

[redacted]

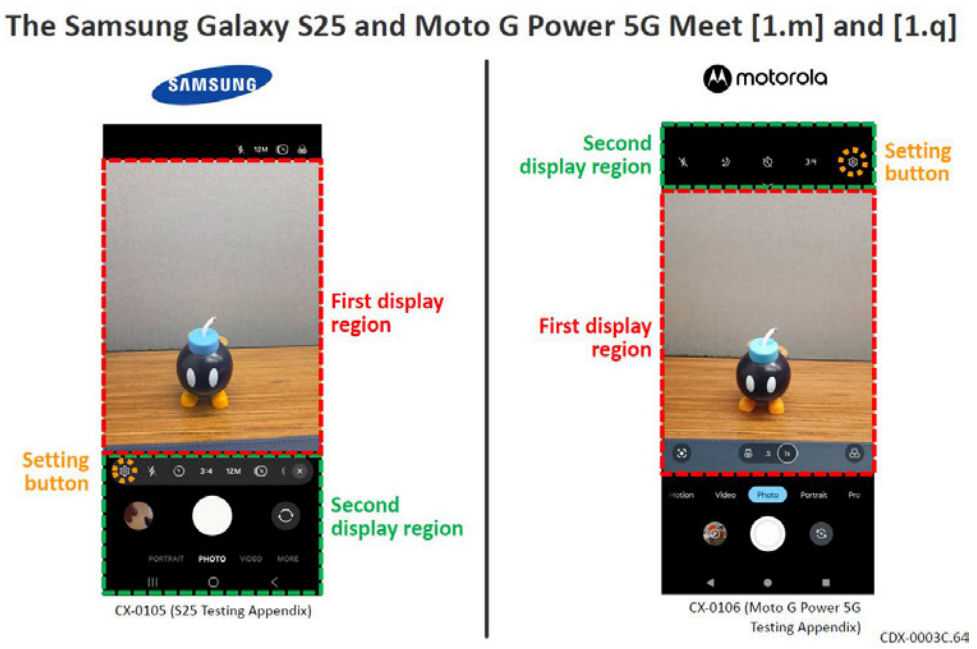

See id. at 109:12-110:24 (citing CDX-0003C.64).

As for limitation [1n], Dr. Wobbrock testified that the Accused Products and 004 DI Products each have image signal processors ("ISPs") which receive information from the front camera (the first image information) and from the ultra-wide or wide camera on the back (the second image information) via an interface circuit, and generate an image or preview (information to be displayed by the display) based on either the front camera information or ultra-wide or wide camera information. *See* CIB at 66 (citing Hr'g Tr. (Wobbrock) at 111:24-118:10). The S25 ISP is the [redacted] and the Moto ISP is called the [redacted] and [redacted] Hr'g Tr. (Wobbrock) at 113:7-115:6.

Samsung presents its dispute over the "signal processor"-related limitations as involving both the signal processor (limitation [1n]) and its functional requirements (limitation [1o]). *See* RIB at 49-51. Limitation [1o] requires the signal processor to "perform[] image signal processing on the first image information or the second image information to perform white balance correction," and although Samsung does not dispute that white balance correction occurs, it asserts

that it occurs in different hardware components than the ISPs, namely, central processing units. 004 patent at cl. 1; *see* RIB at 49-51. It is not clear that this dispute makes a difference, , under either party's mapping the signal processors all meet limitations [1n] and [1o].

Regardless, Dr. Wobbrock's opinions on this issue are better supported than those of Dr. Hu. This is partly because objections to questions posed to her were sustained, motions to strike her testimony were granted, and questions to her were withdrawn. *See* Hr'g Tr. (Hu) at 1160:10-18, 1170:5-13, 1171:3-18. For instance, although she testified that the source code she reviewed was consistent with her opinion that white balance correction is performed in the her explanation of that opinion was stricken, rendering her opinion more conclusory than it would otherwise have been. *See id*. at 1170:19-1171:18.

More substantively, some of Dr. Hu's opinions were either implausible or poorly supported in view of the documentary evidence. As one example, she testified that the that does not include white balance correction:

Hr'g Tr. (Hu) at 1167:4-1169:11 (citing RDX-0007C.20). It is unclear which exhibit these folder paths come from, because the citation Dr. Hu used in her demonstrative exhibit ("JDX-56C") is to her own expert report, which is not in evidence. *See* Hr'g Tr. (Hu) at 1168:13-1169:8, 1188:22-

1189:2. RDX-0007C.20. which communicates nothing about what the source code actually does. *See* Hr'g Tr. (Hu) at 1168:13-1169:8. Dr. Hu's opinion on this point would have been more persuasive if she had instead provided examples of what the source code shows the does—presumably, something pertaining to image signal processing, as its name implies—as opposed to a conclusory opinion that she found no source code for white balance correction on the . *See id*. at 1169:9-11.

Dr. Wobbrock, by contrast, provided a reasonable and well-supported explanation for his own opinion that white balance correction is performed by the . First, he explained that the purpose of the Hr'g Tr. (Wobbrock) at 168:14-170:3. This is consistent with the CX-0036C.48. It is also consistent with the CX-0035C.8.

Dr. Wobbrock also explained that the

Hr'g Tr. (Wobbrock) at 170:15-171:18.

See CX-0036C.618-.642.

Qualcomm Spectra ISP Camera CHI API Reference *Functional Overview*

CX-0036C.50. Dr. Hu even opined in her expert report that the Hr'g Tr. (Hu) at 1189:3-9.

On balance, then, Dr. Wobbrock's opinion that the in the S25 meets limitations [1n] and [1o] is well-supported and accepted. As for the 004 DI Products, Dr. Hu's opinion that with the only support cited being unspecified and unexplained "source code." Hr'g Tr. (Hu) at 1173:18-1174:13. Dr. Wobbrock, however, cited the functional specification for the , which states that its

[redacted]

CX-0046C.10, .219. Here, too, Dr. Wobbrock's opinion is better-supported than Dr. Hu's and is accepted. Thus, Maxell has shown that the Accused Products and 004 DI Products satisfy limitations [1n] and [1o], specifically via their ISPs.

c. Limitation [1r]

Samsung does not dispute the satisfaction of limitations [1p], [1q], and [1s] by the Accused Products or the 004 DI Products. *See* RIB at 45-53; RRB at 30-38. In light of the expert testimony and evidence cited, Maxell has shown these limitations are met. *See* CIB at 65, 68-69, 72; Hr'g Tr. (Wobbrock) at 109:12-111:23, 118:11-121:18, 128:20-134:7. In particular, the Accused Products and 004 DI Products each have chipsets, [redacted]

respectively, that receive GPS position information and act as controllers for their first and second cameras, wireless communication circuit, display, and signal processor, as required by limitation [1p]. *See* Hr'g Tr. (Wobbrock) at 118:11-121:18. Their second display regions (the smaller display regions) each include a settings icon which opens to a camera settings menu when a user touches the touch panel at the icon's position, as required by limitation [1q]. *See id*. at 111:3-111:23. And their memories record still image data (in "RAW format") that has not been encoded by either the first (JPEG) or second (MPEG) compression scheme, as required by limitation [1s]. *See id*. at 128:20-134:7.

Samsung challenges limitation [1r], though, which pertains to the construed term "focus setting region frame." *See* RIB at 51-53. The latter part of the limitation requires display of the claimed frame "according to a touch detected by the touch panel in the first display region," as well as movement of the displayed position of the claimed frame "based on the detection of an additional touch in the first display region," and Samsung does not dispute that in the Accused Products and 004 DI Products "a generic touch indicator" appears "where a user taps." *Id*. at 52. This can be seen in Dr. Wobbrock's testing:

[redacted]

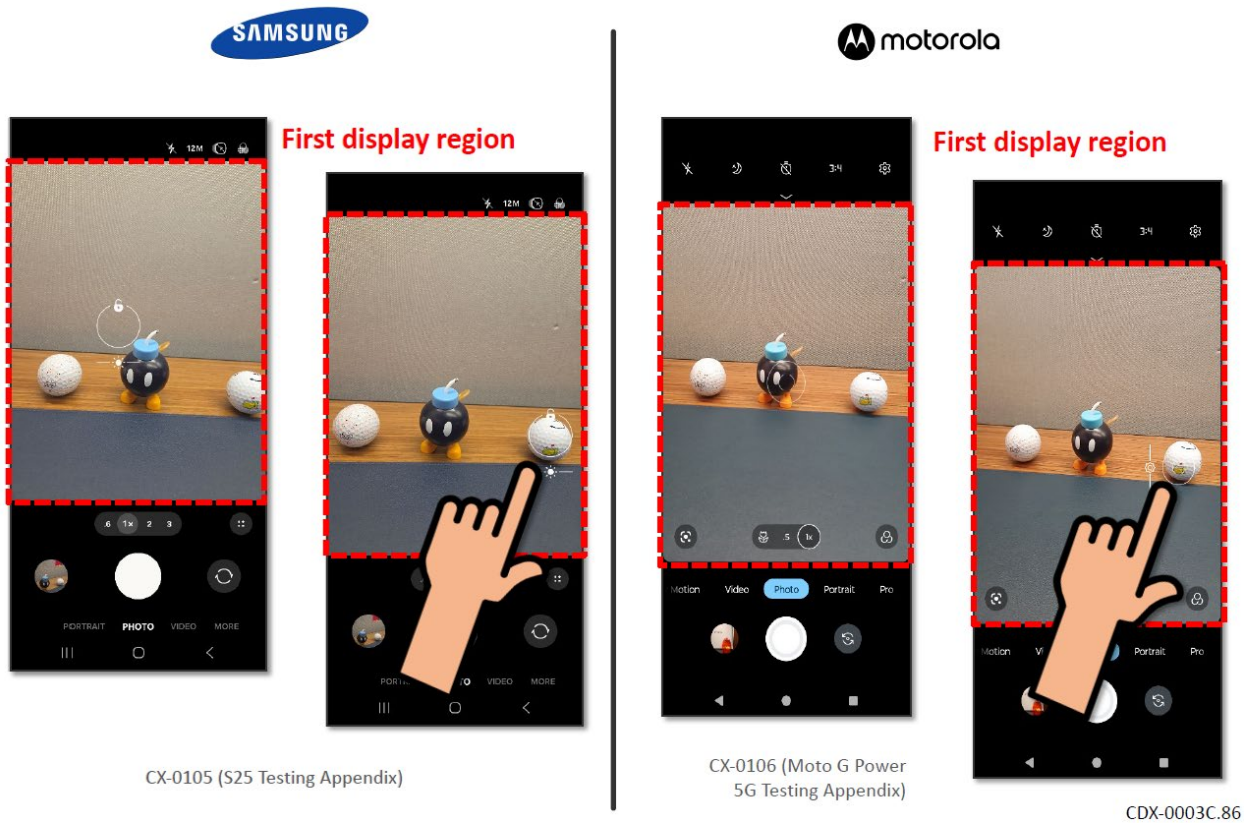

CDX-0003C.86. Dr. Wobbrock explained that in all relevant products a user touch causes the displayed frame to appear and to move upon a second touch, so this part of limitation [1r] is met. *See* Hr'g Tr. (Wobbrock) at 127:7-128:8.

Samsung more pointedly asserts that the first part of limitation [1r], requiring that the claimed frame be a "focus setting region frame," is not met. *See* RIB at 51-53. It specifically argues that the displayed region, which in all relevant products includes something like a white circle, "merely indicates where the user touches the screen," and "the focusing algorithm does not use it to apply focus to the image." *Id*. at 51. For the Accused Products, this is contradicted by Samsung's own engineer, Mr. Beomjoon Kwon, who testified that [redacted] JX-0017C (Kwon Dep.) at 83:12-84:18. This is consistent with the S25 User Guide. See CX-0032C.43 [redacted]

[redacted]

[redacted] Moreover, the indicator only appears when the screen is touched, [redacted] JX-0017C (Kwon Dep.) at 85:2-86:8. [redacted] Hr'g Tr. (Wobbrock) at 126:22-127:6. For the 004 DI Products, the evidence is a little vague, but Dr. Wobbrock testified that the focus setting region frame is similar to that of the S25, and Samsung presents no dispute for it beyond the same one it presents for the S25. *See id*. at 126:6-21; RIB at 51-53.

Samsung, citing Dr. Hu's source code analysis, makes the additional point that [redacted] RIB at 51-52 (citing Hr'g Tr. (Hu) at 1176:23-1177:12). As discussed above in connection with claim construction, though, when the visual indicator is a boundary it cannot bound all objects the camera is focusing on, because it may bound different objects at different distances. And as Dr. Hu testified, [redacted] Hr'g Tr. (Hu) at 1176:23-1177:12. More importantly, [redacted] JX-0017C (Kwon Dep.) at 83:12-84:18. The white circle, in fact, satisfies even Samsung's proposed construction of "focus setting region frame," except that the frame (a circle instead of a rectangle, as in the 004 patent) has small gaps in its perimeter. All of this evidence shows that limitation [1r] is satisfied by both the Accused Products and the 004 DI Products.

Therefore, Maxell has shown that claim 1 is infringed by the Accused Products and practiced by the 004 DI Products.

[redacted]

2. Claim 10

Claim 10 depends from claim 1 and recites:

> The mobile terminal of claim 1, wherein the second camera generates second image information during the same time period as the third camera generates third image information and the signal processor receives the second image information and the third image information from the interface circuit and performs image processing on the second image information and the third image information such that the display displays image data based on the image processing performed on both the second image information and the third image information.

004 patent at cl. 10. Samsung does not dispute the satisfaction of claim 10 by the Accused Products or the 004 DI Products. *See* RIB at 45-53; RRB at 30-38. In light of the expert testimony and evidence cited, Maxell has shown that claim 10 is satisfied. *See* CIB at 72-73; Hr'g Tr. (Wobbrock) at 134:13-136:2. For instance, in the S25 the relevant function is "Dual Rec," where the display shows a "picture in picture," one coming from one camera (the second camera) and one coming simultaneously from another (the third camera). *Id*. at 134:16-135:10 (citing CDX-0003C.94). And in the 004 DI Products, the functionality is nearly identical, and is called "Dual Capture." Hr'g Tr. (Wobbrock) at 135:11-20 (citing CDX-0003C.94).

Therefore, Maxell has shown that claims 1 and 10 are infringed by the Accused Products and practiced by the 004 DI Products.

3. Samsung Redesigned Products

In April 2025 Samsung imported four [redacted] into the U.S., each having the source code for its [redacted]:

[redacted]

[redacted]

RX-4533; *see* Hr'g Tr. (Hu) at 1180:8-1181:18; RX-1648C. These are the "004 Redesigned Products," their designs are fixed, and they were disclosed during discovery. *See* Hr'g Tr. (Hu) at 1180:8-1181:18; RX-4600C at 28-29. They are therefore subject to adjudication, a point Maxell does not dispute. *See* CIB at 73-76; *Certain Human Milk Oligosaccharides and Methods of Producing the Same*, Inv. No. 337-TA-1120, Comm'n Op. at 19-22 (June 8, 2020).

Maxell does contend, however, that the 004 Redesigned Products infringe claims 1 and 10. *See* CIB at 73-76. For literal infringement, Maxell argues that its proposed construction of "focus setting region frame" is met because the [redacted] provide a visual indication of a region enabling changing of focus settings. *See id*. at 74. But the correct construction of "focus setting region frame" is "visual indication of a focus setting region," and under that construction Samsung is correct that no region is displayed at all. *See* RIB at 55. To the extent any region is displayed, it is the entire touch screen, which is surely not a legitimate "region." Even under Maxell's

[redacted]

proposed construction, where the [redacted] are allegedly a visual indication of a region enabling changing of focus settings, Maxell does not explain how [redacted] can indicate a "region." *See* CIB at 74; CRB at 40-41; Hr'g Tr. (Hu) at 1182:6-22 ([redacted]. So literal infringement has not been shown, even under Maxell's proposed construction.

Nor has doctrine of equivalents infringement. Dr. Wobbrock testified that under a function/way/result analysis, the doctrine of equivalents is satisfied. *See* Hr'g Tr. (Wobbrock) at 139:11-140:9. The functions are the same (displaying and moving a user interface element based on touch detection), but the way and result are not substantially similar, because no "region" is indicated in the 004 Redesigned Products. *See id*. Dr. Wobbrock's "way," which he defined as [redacted] entirely ignores the need to indicate a region. *See id*. When application of the doctrine of equivalents renders a claim limitation "inconsequential or ineffective," equivalence has not been shown, and that is the case here with the claimed "region." *Akzo Nobel Coatings, Inc. v. Dow Chemical Co*., 811 F.3d 1334, 1342 (Fed. Cir. 2016). And as Dr. Hu explained, even accepting Dr. Wobbrock's result—"conveying to the user the portion of the preview image that is in focus and will result in an image with a focus on that portion"—the 004 Redesigned Products' [redacted], not a "portion of the preview image that is in focus." Hr'g Tr. (Hu) at 1182:23-1183:17. On balance, then, Maxell has not shown direct infringement of any claim of the 004 patent by the 004 Redesigned Products either literally or equivalently.

F. Validity

Samsung alleges that claims 1 and 10 of the 004 patent would have been obvious in view of four prior art references. The 004 patent was invented by Ryuji Nishimura and has a priority

date of June 23, 2016, and is therefore subject to the America Invents Act. *See* 004 patent; CIB at 8. U.S. Patent No. 9,787,890 to Cho, et al. ("Cho") (RX-0064) issued October 10, 2017 from an application filed September 24, 2014, and is therefore prior art under 35 U.S.C. § 102(a)(2). European Patent Application No. EP 2,760,208 to McCrackin, et al. ("McCrackin") (RX-0068) was filed January 25, 2013 and was published July 30, 2014, and is therefore prior art under at least 35 U.S.C. § 102(a)(2). U.S. Patent No. 10,462,441 to Lee, et al. ("Lee") (RX-0066) issued October 29, 2019 from a PCT application filed October 28, 2015, and is therefore prior art under 35 U.S.C. § 102(a)(2). The LG G5 phone ("LG G5") was sold in the U.S. no later than March 2016 (*see* RX-0732C, RX-0734C), and is therefore prior art under 35 U.S.C. § 102(a)(1). Maxell does not dispute the prior art status of any of these references. *See* CIB at 76-79.

Samsung presents two prior art combinations it refers to as Ground 1, comprising Cho, McCrackin, and Lee, and Ground 2, comprising Cho, McCrackin, Lee, and the LG G5. *See* RIB at 56-74. Cho, Samsung's principal reference, discloses a mobile terminal with wireless connectivity, a display, a controller, and a camera. *See* RX-0064 at Abstract. McCrackin discloses white balance correction. *See* RX-0068 at [0015]. Lee discloses multiple rear-facing cameras. *See* RX-0066 at Abstract. And the LG G5 displays a bordered frame for auto focus when a user touches its screen. *See* Hr'g Tr. (Katsaggelos) at 915:17-916:3. Samsung asserts that claims 1 and 10 would have been obvious in view of the Ground 1 combination, and it relies on the LG G5 in the Ground 2 combination mainly for teaching limitation [1r]. *See* RIB at 59-74. Maxell contests the disclosure of limitations [1h], [1l], and [1r] under both Ground 1 and Ground 2, as well as the motivation to combine the Ground 2 references, but presents no objective indicia of non-obviousness. *See* CIB at 76-79.

[redacted]

The Ground 1 combination discloses most but not all of the limitations of claims 1 and 10, and the LG G5 is largely irrelevant, as explained below. Thus, both Ground 1 and Ground 2 will be analyzed together.

1. Cho and Limitation [1d]

Cho (RX-0064) expressly describes the following limitations of claim 1 of the 004 patent:

[1pre] A mobile terminal having a first side and a second side opposite to the first side, comprising:	a mobile terminal (Abstract) with a front side (Fig. 1B) and a rear side (Fig. 1C).
[1a] a first camera included on the first side of the mobile terminal, the first camera configured to generate first image information including still image data and moving image data;	a camera on the front side (Fig. 1B, 121a) "for obtaining images or video" (3:57-58) and that "process[es] image frames of still images or video" (6:55-56).
[1b] a second camera included on the second side of the mobile terminal, the second camera configured to generate second image information including still image data and moving image data;	a camera on the rear side (Fig. 1C, 121b) which "obtain[s]" image or video input and that "process[es] image frames of still images or video" (6:54-56).
[1e] a recording medium recording the encoded still image data and the encoded moving image data;	processed image frames can be "stored in memory 170" (6:57-59).
[1f] a wireless communication circuit for connecting the mobile terminal to the Internet;	a "wireless Internet module 113" may be "internally or externally coupled to the mobile terminal 100" (5:43-45).
[1g] a GPS signal receiver for acquiring position information of the mobile terminal;	"location information module 115" may "include[] a Global Position System (GPS) module" (6:35-39).
[1i] a proximity sensor generating proximity information;	a "proximity sensor 141" (4:4), where "controller 180 processes data corresponding to proximity touches" (8:2-3).
[1j] a sensor to detect rotation of the mobile terminal;	"sensing unit 140" may include "a gyroscope sensor" (4:5-8), which detects rotation of the mobile terminal (Hr'g Tr. (Katsaggelos) at 906:6-12).
[1k] a touch panel;	a "touch screen" incorporated into "display unit 151" (4:24-26).
[1m] the display including a first display region and a second display region different from the first display region, the second display region displaying a plurality of settings	"preview image 300" (16:52-53) appears in the bulk of the display (Fig. 7A), and "graphic object 302" (18:20) appears at the top and bottom of the display (Fig. 7A), where the "graphic object" includes "a setting button for

[redacted]

corresponding to at least one or more of the first camera and the second camera;	changing a setting with respect to the preview image 300" and a "button for switching" camera modes (18:21-25).
[1q] wherein the plurality of settings include a setting button that is displayed in the second display region and the touch panel detects a touch of a position of the displayed setting button,	"a setting button for changing a setting" and a "button for switching" camera modes (18:21-25) are displayed in the top and bottom of the display (Fig. 7A), where the "controller 180 can set functions" including mode, flash, and front/rear camera, "based on a user request applied to the graphic object 302" (16:51-61).

As for limitation [1c], requiring a third camera on the same side as the second camera, configured to generate third image information and disposed at a predetermined interval in a longitudinal direction from the second camera, Cho only discloses two cameras, with no mention of how they are disposed except that it may be a "matrix" or "stereoscopic arrangement." RX-0064 at 6:59-64. Lee (RX-0066), however, teaches a mobile terminal with three cameras, one on the front (121a in Fig. 1B) and two on the rear (121b and 121c in Fig. 1C), with all three cameras "process[ing] [an] image frame, such as still picture or video" (6:59-60), and with the second and third cameras on the rear disposed at a particular vertical (longitudinal) interval (Fig. 1C). So the elements of limitation [1c] are disclosed by Lee.

Limitation [1d], however, is not fully disclosed in the Ground 1 references Samsung cites. Cho does not disclose an encoder or two compression schemes, and Samsung relies on McCrackin to fill in the gaps. *See* RIB at 62-63. McCrackin does teach a digital camera "configured to capture images or video," where the "images may be stored in various formats including JPEG, RAW, BMP, etc." RX-0068 at [0057]. The limitation, though, requires encoding first and second image information using a first type of compression scheme, and also encoding moving image data included in the second image information using a second type of compression scheme. 004 patent at cl. 1. Dr. Katsaggelos testified that JPEG and RAW compress still images, and Dr. Wobbrock

[redacted]

testified that JPEG compresses still images, and also testified that using the RAW format could result in either compressed or uncompressed data; BMP was not explained by either expert. *See* Hr'g Tr. (Katsaggelos) at 897:14-898:1; Hr'g Tr. (Wobbrock) at 89:9-19, 129:4-131:16. McCrackin apparently consistently refers to still images as "images," and videos, or moving images, as "videos," and does not identify any particular video compression format, such as MPEG. RX-0068 at [0057]; *see* Hr'g Tr. (Wobbrock) at 91:18-92:11 ("MPEG compression" is "a second type of scheme" for a video file). McCrackin does describe storing videos in memory, but when describing storage formats it only discloses that "images," as opposed to videos, "may be stored in various formats," followed by two still image formats (JPEG and RAW) and one unidentified format (BMP). RX-0068 at [0057].

In short, neither Cho nor McCrackin expressly disclose "encoding the moving image data included in the second image information using a second type of compression scheme," as required by limitation [1d]. Even reading McCrackin broadly, as teaching that both cameras (253a in Fig. 3 and 253b in Fig. 4) output still and moving image data, and that compression entails encoding, there is simply no disclosure of encoding moving image data using a second type of compression scheme. Dr. Katsaggelos virtually concedes this:

> Again, disclosing that videos are also acquired and stored, it would have been obvious to a POSITA that video compression schemes that were available and people knew about at the time of the invention could also be used to further the objectives of McCrackin.

Hr'g Tr. (Katsaggelos) at 897:14-898:1. So although Maxell does not argue that limitation [1d] is missing from both Cho and McCrackin, in fact Samsung has not shown that it is present in either reference.

Nor does Samsung brief the effect of the LG G5 on limitation [1d]. *See* RIB at 72-74. Dr. Katsaggelos testified that the LG G5 encoded still images in JPEG format and video in MP4

format. *See* Hr'g Tr. (Katsaggelos) at 900:1-8 (citing RX0734C.5). This comes closer to satisfying the limitation, because a video compression scheme is disclosed, but the limitation still requires using the second type of compression scheme to encode "the moving image data included in the second image information," and Dr. Katsaggelos did not identify where the LG G5's moving image data came from. *See* Hr'g Tr. (Katsaggelos) at 900:1-8. So Samsung has not shown disclosure of every element of limitation [1d] even under Ground 2.

2. Limitation [1h]

Maxell contests the disclosure of limitation [1h], requiring an interface circuit, and relatedly limitation [1n], requiring a signal processor that receives information via the interface circuit, under both Ground 1 and Ground 2. *See* CIB at 76-77; CRB at 41-43. Samsung relies on Cho for limitation [1h], but fails to identify any particular part or component in Cho that corresponds to the required "interface circuit" that receives image information from the first and second cameras. *See* RIB at 63-65; RRB at 41-42.

Instead, Samsung raises two points. First, it appears to rely on an inherency argument: "Cho's Figure 1A discloses cameras connected to a controller" and a POSITA "would understand that the connection between those components necessarily includes interface circuitry." RRB at 41-42 (citing Hr'g Tr. (Katsaggelos) at 903:5-12); *see* RIB at 65. Dr. Wobbrock persuasively refuted that point, though, by observing that in Cho the only disclosed processing of the claimed first and second image information occurs in the cameras themselves. *See* Hr'g Tr. (Wobbrock) at 934:14-23 (citing RX-0064 at 932:4-933:1). Similarly, although McCrackin describes "input interfaces 206" connected to a processor, those input interfaces are coextensive with McCrackin's cameras (253a and 253b). RX-0068 at [0027], Fig. 1. So an interface circuit between the cameras and the signal processor is not, in fact, necessary in either Cho or McCrackin, and thus cannot be inherent.

Second, Samsung relies on Cho's teaching that "video" and "image" data "may be analyzed and processed by controller 180." RRB at 41 (citing RX-0064 at 3:61-65). Cho's disclosure, however, is not particularized and does not clearly correspond to the requirements of other limitations of claim 1, including that the "controller as signal processor" generates the required information to be displayed (limitation [1o]) and that the controller controls itself in its capacity as a signal processor (limitation [1p]). *See* RX-0064 at 52-65 ("Data (for example, audio, video, image, and the like) is obtained by the input unit 120 and may be analyzed and processed by controller 180 according to device parameters, user commands, and combinations thereof."). And although input unit 120 arguably interfaces between camera 121 and controller 180, Samsung explicitly disclaims reliance on it as the "interface circuit." *See* RIB at 41 ("Neither Samsung nor Dr. Katsaggelos contend that Cho's 'input unit' is the claimed interface circuit . . .."). It also relies on McCrackin, rather than Cho, for disclosure of the signal processor of limitation [1n], as discussed below, so it is not clear that controller 180 is even relevant. *See* RIB at 67-68.

Cho therefore does not describe the entirety of limitation [1h], either expressly or inherently. Because Samsung relies entirely on Cho for this limitation, Samsung has not identified a prior art disclosure of every element of it, even under Ground 2.

3. Limitation [1l]

Limitation [1l] requires a display integrated with the touch panel and configured to switch between a first state and a second state based at least on the proximity information of limitation [1i]. 004 patent at cl. 1. Cho teaches two states, a "first state" where the display shows both a preview image (300) and a "graphic object 302" (comprising various setting icons), and a "second state" where the display shows only the preview image. RX-0064 at 16:62-17:23, 18:21-25. Cho's display is also integrated with its touch panel. *See id*. at 4:24-26.

Maxell alleges that Cho does not describe switching between the first and second states "based at least on the proximity information." *See* CIB at 77. But as Dr. Katsaggelos noted, Cho describes "proximity touches" as causing a change to the displayed information: "In general, controller 180 processes data according to proximity touches and proximity touch patterns sensed by the proximity sensor 141, and cause[s] output of visual information on the touch screen." Hr'g Tr. (Katsaggelos) at 907:6-22 (citing RX-0064 at 8:2-5). Cho elsewhere states that the displays corresponding to the first and second states are controlled by the controller. *See* RX-0064 at 16:42-17:16. And Cho states that when a "drag touch" is sensed, "the controller 180 can output the graphic object 302," thereby changing display states, as shown in Fig. 7A:

FIG. 7A

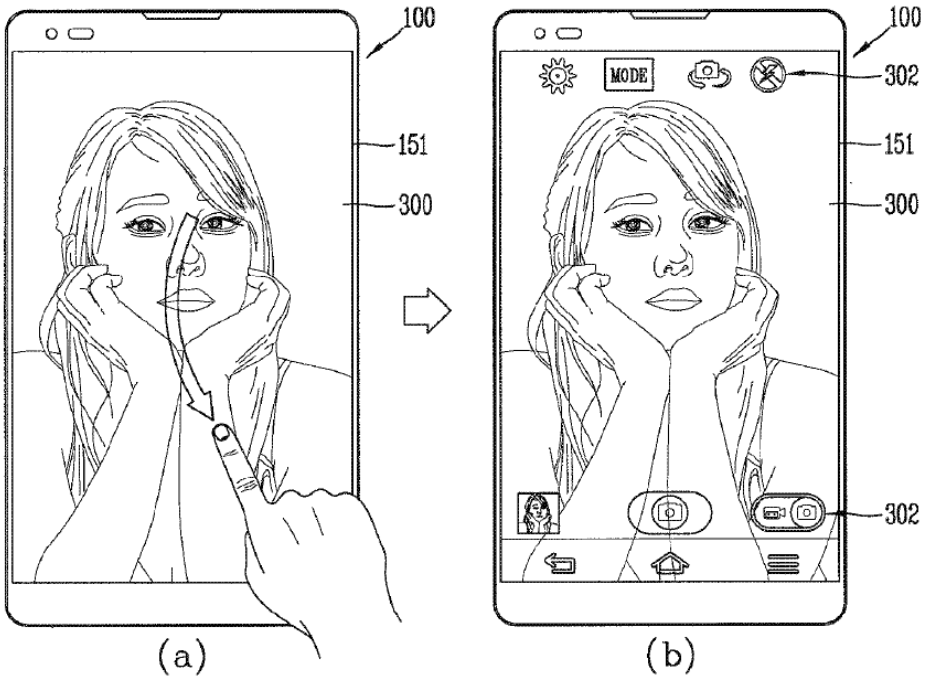

Id. at 26:57-62, Fig. 7A.

Maxell's specific challenge to this is that the claim requires a change to the state of the "hardware," rather than to the state of the "graphical user interface." CIB at 77; CRB at 43-44.

This challenge is refuted by the 004 patent, which gives an example of how the states switch: "once the proximity sensor 31 detects a proximity object to be within a range of a preset distance . . . , the control circuit 6 may perform control of changing a display to another display." 004 patent at 10:2-7. This is essentially how the "drag touch" in Cho operates, so on balance limitation [1l] is disclosed in Cho.

4. Limitations [1n] and [1o]

Samsung relies on McCrackin for disclosure of limitations [1n] and [1o], requiring a "signal processor . . . to perform white balance correction." 004 patent at cl. 1; *see* RIB at 67-68. McCrackin teaches a "processor 240" coupled to "input interfaces 206 (such as a first camera 253a [and] a second camera 253b . . .)" and to "output interfaces 205 (such as a display 204 . . .)." RX-0068 at [0027]. It also teaches:

> to the first camera and the second camera. The processor is configured to: capture a first image using the first camera and capture a second image using the second camera, the first image and the second image being temporally related; determine one or more white balance correction values for the first image by analyzing the first image and the second image, the white balance correction value representing the effect of lighting conditions on the first image and the second image; and correct one or more images captured by the first camera based on the white balance correction value.

Id. at [0016].

All this comes close to disclosing every requirement of limitations [1n] and [1o], but as noted, neither Cho nor McCrackin disclose the "interface circuit" of limitation [1h], which is also required by limitation [1n], and Samsung fails to identify where McCrackin discloses that the signal processor's generated information is "to be displayed by the display." *See* RIB at 67-68. Dr. Katsaggelos pointed to the description of the processor 240 as being coupled to the display 204, but that does not mean specifically that the processed, white balance-corrected image

[redacted]

information gets displayed. *See* Hr'g Tr. (Katsaggelos) at 908:6-14. McCrackin, in fact, only discloses "stor[ing]" or "retain[ing]" a white balance-corrected image "in memory." RX-0068 at [93], [103]. To be sure, the claim does not require that a white balance-corrected image be displayed; it suffices if the "signal processor . . . generates information" of some kind "to be displayed," and that the information is "based on one or more of the first image information and the second image information." 004 patent at cl. 1. But neither Samsung nor Dr. Katsaggelos particularly point out what that generated information is, other than "white balance correction," which, again, McCrackin discloses is sent to memory rather than to a display. RIB at 67-68; Hr'g Tr. (Katsaggelos) at 908:6-910:3. So although McCrackin discloses limitation [1o], Samsung has failed to identify a disclosure of the entirety of limitation [1n], even under Ground 2.

5. Limitation [1p]

Samsung has shown that all elements of limitation [1p], which requires a controller having certain features, are present in either Cho or McCrackin, and again, Maxell does not dispute this. *See* RIB at 67-69; CIB at 76-79. Cho discloses a controller (180) that controls the first and second cameras (121), the wireless communication circuit (112 and 113), and the display (151), and also receives position information from the GPS signal receiver (115):

[redacted]

FIG. 1A

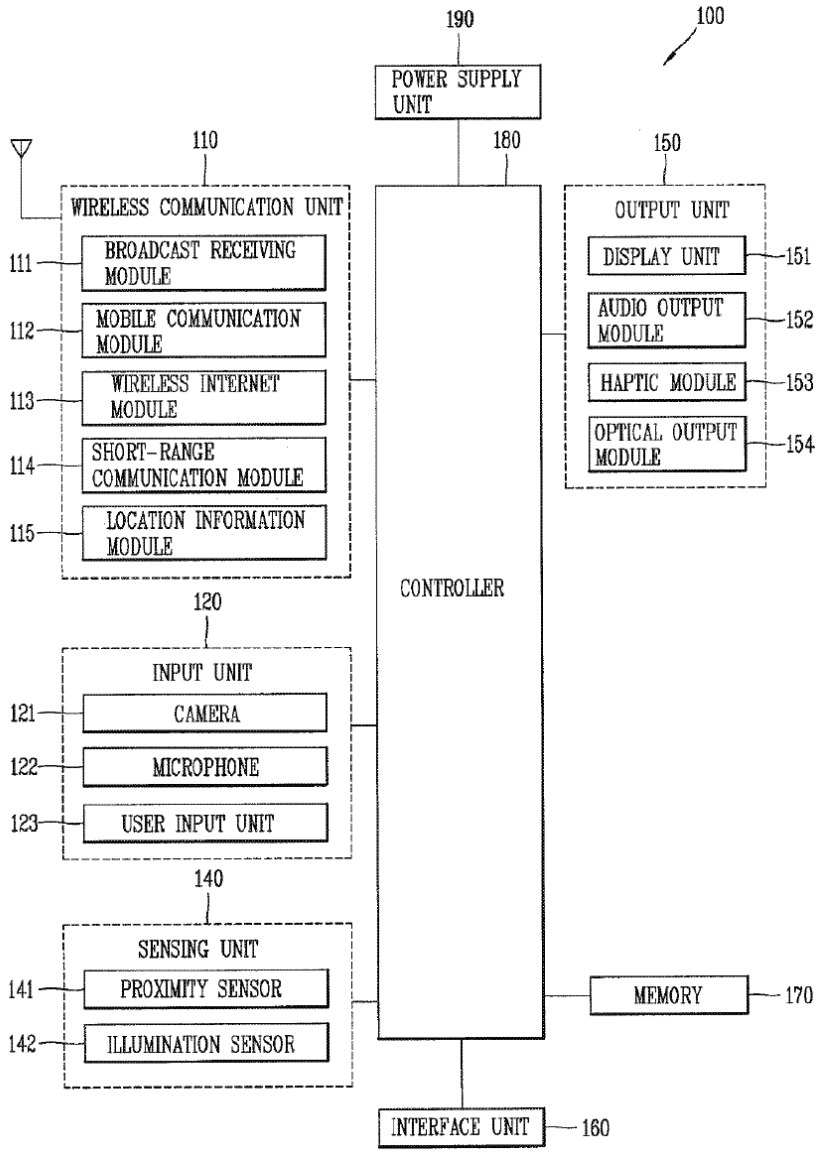

RX-0064 at Fig. 1A, 6:35-50; *see* Hr'g Tr. (Katsaggelos) at 910:4-911:13. There is an inconsistency, however, relating to the claimed "signal processor." Samsung relies on the "processor" of McCrackin to show the "signal processor" of limitations [1n] and [1o] (*see* RIB at 67-68), but then cites the "controller" of Cho to show "the signal processor" of limitation [1p] (*see id*. at 68-69), an element which would seem to have antecedent basis in limitations [1n] and [1o]. So Samsung's mapping is not entirely clear as between the two references. Nonetheless, because

[redacted]

Samsung argues for a motivation to combine the references anyway, and at least McCrackin discloses "the signal processor," all requirements of limitation [1p] are found in the combination of Cho and McCrackin.

6. Limitation [1r]

Limitation [1r] requires a focus setting region frame, where its position can be move based on an "additional touch in the first display region." 004 patent at cl. 1. Cho discloses this at least in Fig. 6C, with the "focus setting region frame" shown as a broken black box:

FIG. 6C

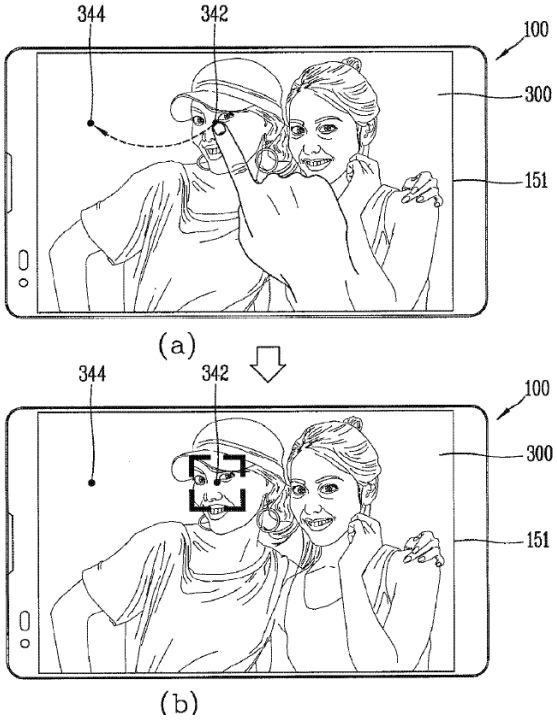

RX-0064 at Fig. 6C, 23:54-24:23. Maxell contends that the black box is not actually displayed in Cho, and it is true that Cho does not expressly state that the box is displayed, but it also does not say that it is not displayed, so Maxell's argument misses the point. *See* CIB at 78. Figure 6C of Cho (and numerous other figures) show a black box as the region of the display where the imaging target is located. A POSITA looking at Figure 6C would surely understand that Cho's black box

[redacted]

constitutes a "visual indication of a focus setting region," and that it could be displayed, even if Cho's written description does not say so explicitly. So all requirements of limitation [1r] are found in Cho.

7. Limitation [1s]

Limitation [1s] requires, in essence, uncompressed image information stored in memory. 004 patent at cl. 1. Samsung correctly maps Cho's memory for "stor[ing]" processed image frames to the claimed recording medium for recording still image data included in either the first or second image information (RX-0064 at 6:57-59), and cites McCrackin as disclosing the storing of unencoded images in an uncompressed format (*see* RX-0068 at [0057]). *See* RIB at 71-72. So all requirements of limitation [1s] are found in the combination of Cho and McCrackin.

8. Claim 10

Among other elements, Claim 10 requires a third camera and a signal processor receiving image information from the interface circuit. 004 patent at cl. 10. Samsung accordingly relies on Lee for the third camera (as with limitation [1c]), but again it does not identify an interface circuit, and although it asserts that the combination of Cho, McCrackin, and Lee renders claim 10 obvious, it does not specify whether the claimed signal processor is the "processor" of McCrackin or the "controller" of Cho. *See* RIB at 72. The remaining elements of claim 10, however, are disclosed in McCrackin and Lee. McCrackin teaches displaying "images in the electronic signals received from the cameras 253a, 253b," which can be on the same side of the apparatus and thus qualify as the second and third cameras, and doing so "in real time or near real time." RX-0068 at [0042], [0057]. And Lee teaches processing image information from at least one of Lee's two rear-facing cameras, generating a "white balance reference value" from the image processing, and then displaying a "guide image 502b" based on that reference value to aid the user in moving the mobile terminal to improve the white balance data:

[redacted]

FIG. 5B

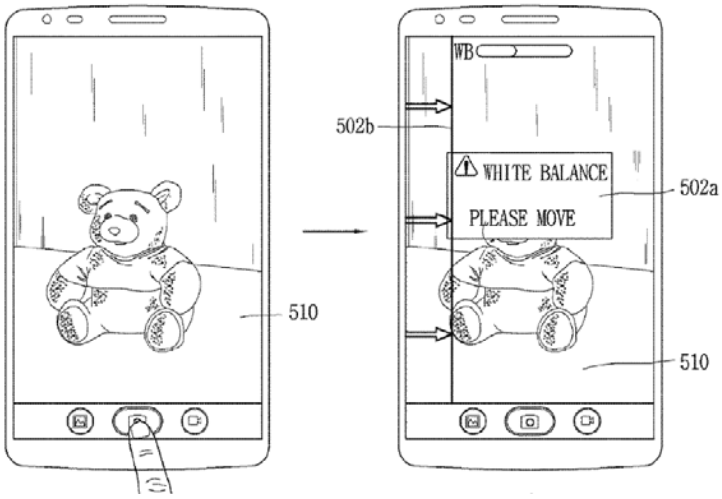

RX-0066 at 19:22-30, Fig. 5B. So the elements added by claim 10 are found in the combination of McCrackin and Lee.

9. Summary and Discussion

To summarize: limitation [1c] is disclosed by Lee, limitations [1d], [1h], and [1n] are not fully disclosed under Ground 1 or Ground 2, limitation [1o] is disclosed by McCrackin, limitation [1p] is disclosed by the combination of Cho and McCrackin, limitation [1s] is disclosed by the combination of Cho and McCrackin, every other limitation of claim 1 is disclosed by Cho, and the elements added by claim 10 (which depends from claim 1) are disclosed by the combination of McCrackin and Lee. Thus, because "the prior art simply does not disclose" three essential elements of claims 1 and 10, the scope and content of the prior art and the differences between the prior art and the claimed invention weigh heavily against obviousness. *In re Vaeck*, 947 F.2d 488, 493 (Fed. Cir. 1991).

As for a reason to combine, Maxell contends that a POSITA would have had no reason to combine the Ground 2 references, but it is silent on the three Ground 1 references. *See* CIB at 76-79; RRB at 41. Dr. Wobbrock did testify, however, that "in both of these combinations"

Samsung's motivation-related expert evidence is "vague" and "ambiguous," and combining the cited references would be "nontrivial" and require undue experimentation. Hr'g Tr. (Wobbrock) at 942:23-943:25. In fact Dr. Katsaggelos' testimony was somewhat conclusory; he testified that the Ground 1 references all disclose "mobile devices with similar capabilities," with the most pertinent detail being that both Cho and Lee are LG patents, suggesting that these references are "complementary." Hr'g Tr. (Katsaggelos) at 886:15-887:17. On balance, though, Samsung's evidence of a reason to combine is not especially strong.

In view of the mediocre evidence of a motivation to combine, and further in view of the *Graham* factors, especially the lack of complete disclosure of three limitations, Samsung has not shown that claims 1 or 10 would have been obvious. Samsung has accordingly not met its burden to prove the invalidity of either asserted claim of the 004 patent.

VI. U.S. PATENT NO. 12,108,103

A. Level of Ordinary Skill in the Art

The parties propose almost identical definitions of a POSITA, and both are reasonable. *Compare* CIB at 9 n.6 *with* RIB at 75. Accordingly, a POSITA at the time of the 103 patent's invention would have had a bachelor's degree in computer science or a related field, with one year of experience with applications and user interfaces with display units, with additional relevant experience substituting for education and vice versa.

B. Claims at Issue

Claim 1 of the 103 patent is at issue in this investigation, through allegations of infringement and domestic industry technical prong. *See* CIB at 83-105. The claim requires:

> 1. A smartphone comprising:
>
> a communication unit configured to communicate with a cellular base station via a cellular connection and receive a webpage from an Internet;

Maxell, Ltd.
EX2041
Page 96 of 236

[redacted]

a display unit comprising a touch panel arranged to display the webpage received by the communication unit, wherein the display unit is configured to further display a setting screen for designating an external device;

a data transmitting and receiving unit configured to conduct wireless communication with the external device configured to execute video processing for displaying the webpage on an external display which is different from the display unit of the smartphone;

the touch panel to which a user operation is inputted, wherein the touch panel is configured to receive an input of identification information to designate the external device from a user on the setting screen;

a memory configured to store software to implement a browser to display the webpage on the display unit, wherein the webpage is received from the Internet; and

a control unit configured to:

during the displaying of the webpage on the display unit, in response to the touch panel receiving, at a first point of time, a first user operation to display the webpage on the external display of the external device designated by the user, control the data transmitting and receiving unit to conduct communications with the external device to display, on the external device, the webpage that is being displayed on the display unit;

after the displaying of the webpage commences on the external display of the external device, in response to the touch panel receiving, at a second point of time, a second user operation to control the displaying of the webpage on the external display, control the data transmitting and receiving unit to transmit information reflecting the second user operation to the external device so that displaying of the webpage on the external display reflects the second user operation, by which the smartphone is made to serve as a remote control device;

during displaying of the webpage on the external display, in response to the touch panel receiving, at a third point of time, a third user operation instructing to terminate the displaying of the webpage on the external display by the external device, control the data transmitting and receiving unit to transmit information related to the third user operation to terminate displaying of the webpage on the external display, and terminate control of the smartphone to serve as the remote control device; and

after display of the webpage on the external device is terminated based on the third user operation, control the display unit to continue to display the webpage,

wherein the first user operation is input to the touch panel in response to a first icon displayed on the display panel being touched by a user,

[redacted]

> wherein the third user operation is input to the touch panel in response to a second icon displayed on the display panel being touched by a user,
>
> wherein the first icon and the second icon are displayed exclusively in a same position on the display panel, and
>
> wherein the controller is configured to control the display panel such that the second icon is not displayed when the first icon is displayed, and the first icon is not displayed when the second icon is displayed.

103 patent at cl. 1 (annotated).

C. Claim Construction

The parties identify three claim terms as needing construction. *See* CIB at 80-83; RIB at 75-78.

1. "remote control device"

"Remote control device" appears in claim 1. Maxell contends that one of ordinary skill in the art "would understand this term to encompass a device that enables remote influence over the operation or content on another device, and that understanding does not require any special construction." CIB at 80-81. Samsung argues that its construction—"device capable of transferring a user control command/operation for controlling the external device"—is the plain and ordinary meaning of the term. RIB at 75. The crux of the dispute is that, according to Samsung, one of ordinary skill in the art at the time of the invention would not have understood "remote control device" to encompass screen mirroring. *See id.* (citing Hr'g Tr. (Balakrishnan) at 528:6-529:7). Samsung further argues that the specification supports Samsung's construction because it discloses an embodiment where "the phone's display changes to controller buttons and the TV displays what was previously displayed on the phone." RIB at 76 (citing 103 patent at 10:52-65, Fig. 4; Hr'g Tr. (Bederson) at 817:4-818).

Given the real dispute between the parties, the proper claim language to construe is "is made to serve as a remote control device," and Maxell is more persuasive. The claim recites:

[redacted]

> . . . after the displaying of the webpage commences on the external display of the external device, in response to the touch panel receiving, at a second point of time, a second user operation to control the displaying of the webpage on the external display, control the data transmitting and receiving unit to transmit information reflecting the second user operation to the external device so that displaying of the webpage on the external display reflects the second user operation, by which the smartphone is made to serve as a remote control device, . . .

103 patent at cl. 1. That is, "the smartphone is made to serve as a remote control device" when it "control[s] the data transmitting and receiving unit to transmit information reflecting the second user operation to the external device so that displaying of the webpage on the external display reflects the second user operation." The natural reading of the claim language is that the smartphone merely controls the data going to the external device, so that the external device's display "reflects" the second user operation input to the smartphone, as opposed to controlling the external display by directly controlling the external device.

Samsung's proposed construction is also disfavored because it excludes an exemplary embodiment in the specification, which recites:

> In this state, in which the TV set can be operated if the user presses a desired key of the input unit 102, data which indicates an operation for the TV set and which can be interpreted by the TV set designated in step 501 is sent to the TV set. The data includes data items almost the same as those of data sent from a remote control device of the TV set. Therefore, in a situation wherein it is desired to move a selection item of an Internet site being displayed on the TV set or to determine a selection item, if the user operates the input unit 102 of the cellular phone to press a key corresponding to an operation information item shown in the screen display 404, the cellular phone sends an information item and a signal indicating an indication of the operation to the TV set (step 506). As a result of this step, the cellular phone serves as a remote control device of the TV set. The operation of this step is carried out, for example, under supervision of the system control unit 301.

103 patent at 11:18-34. In this embodiment the user operates the input unit 102 to press a key corresponding to an operation information item shown in the screen display 404, and the cellular phone sends an information item and a signal indicating an indication of the operation to the TV set, which are together "almost the same" as the data in a remote control signal. This is shown in

[redacted]

step 506 of Figure 5, below:

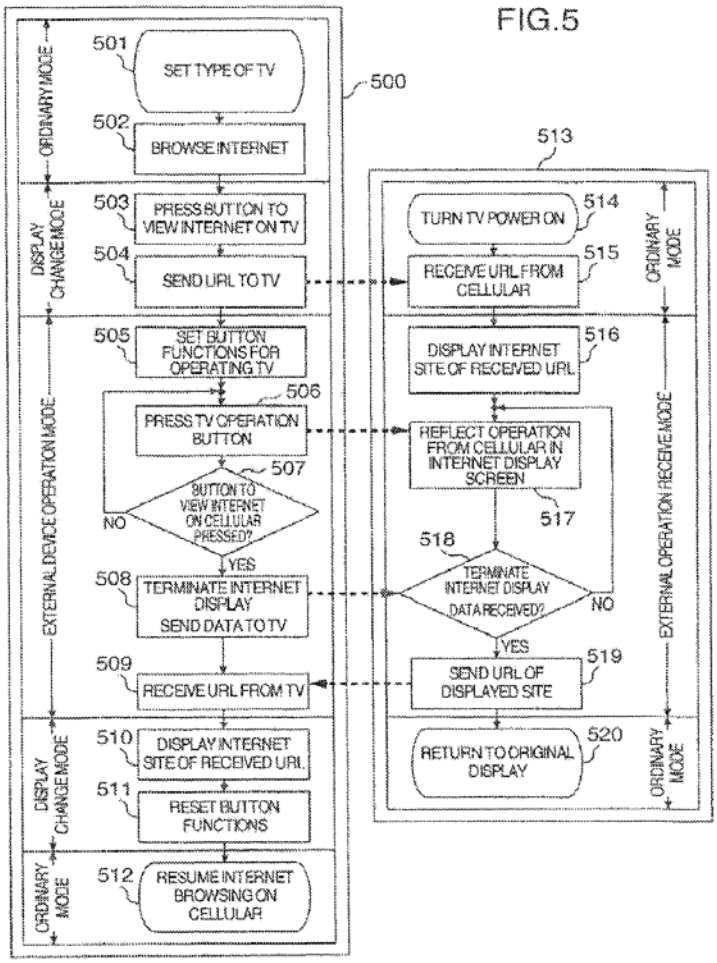

103 patent at Fig. 5. As shown in Figure 5, "reflect operation from cellular in internet display screen" is shown in response to the "press TV operation button" 506, and the use of "reflect" suggests "mirroring" the phone's display rather than completely controlling the TV's operation.

Accordingly, "is made to serve as a remote control device" is construed as "is configured to remotely control the external device's display."

2. "icon"

"Icon" appears in the body of claim 1 within the longer phrase "wherein the first user operation is input to the touch panel in response to a first icon displayed on the display panel being

[redacted]

touched by a user." Maxell argues that "icon" should be construed according to its plain and ordinary meaning. *See* CIB at 81-82. Samsung proposes the construction: "a picture, image, or graphical symbol provided on a display that represents a function, an application or selectable feature which, when selected or activated, causes the function to be performed or the feature to be displayed." RIB at 77. The crux of the dispute between the parties is whether the "icon" may include text "without graphical symbols." *Id*.

Samsung argues that the specification only discloses button displays that comprise text surrounded by rounded rectangles—i.e., they are not mere text alone. *See* RIB at 77 (citing 103 patent at 7:29-41, Fig. 4). This is irrelevant for infringement purposes, as explained below, and in any event Samsung's proposed construction would seem to exclude the preferred embodiment, namely, text surrounded by rounded rectangles. The specification discloses an embodiment where button display 402 is an icon displayed in the display unit 305 of the mobile terminal 101 and displays a relationship between the button display 402 and an operation conducted in response to depression of an associated button, specifically, "View on TV." 103 patent at 7:29-32. As shown in Figure 4, the user may press a selection button of the button display 402 using the input unit 102 to pass the display of the internet site to the internet connection terminal:

[redacted]

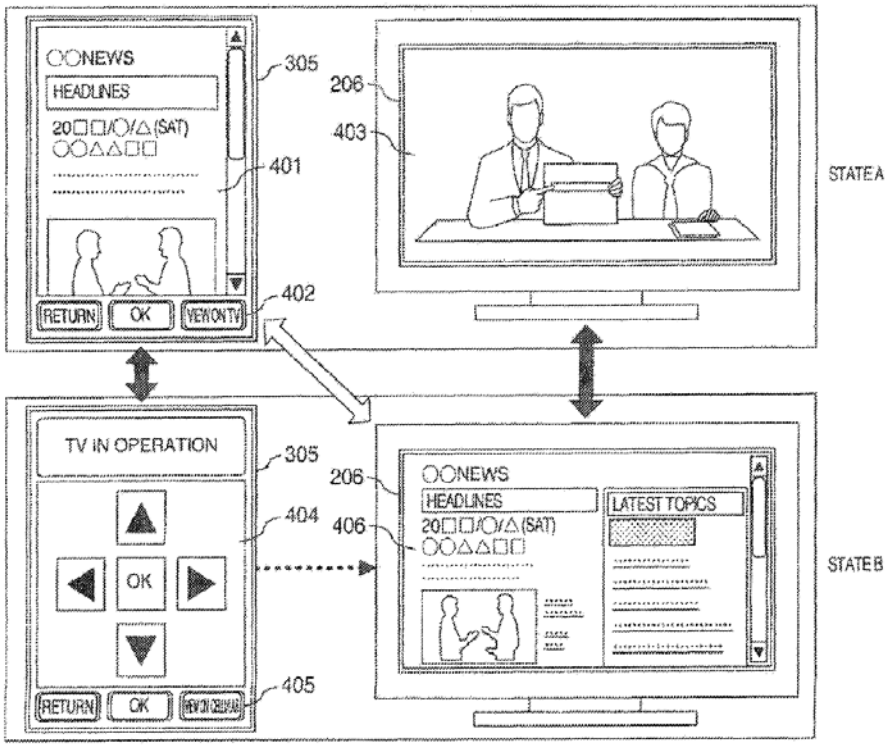

Id. at 7:34-38, Fig. 4. The specification explicitly describes icons that consist of textual content, such as icon 402 labeled "View on TV," surrounded by a rounded rectangle. Samsung's proposed construction is thus unduly narrow because the preferred embodiment apparently does not qualify as "a picture, image, or graphical symbol provided on a display that represents a function, an application or selectable feature which, when selected or activated, causes the function to be performed or the feature to be displayed." RIB at 77.

Accordingly, "icon" is accorded its plain and ordinary meaning, which includes a combination of text and a shape.

3. "the second icon is not displayed when the first icon is displayed"

"The second icon is not displayed when the first icon is displayed" appears in the body of claim 1 within the longer phrase "wherein the controller is configured to control the display panel such that the second icon is not displayed when the first icon is displayed, and the first icon is not displayed when the second icon is displayed." Maxell argues that this phrase should be accorded

[redacted]

its plain and ordinary meaning. CIB at 82-83. Samsung proposes the construction: "second icon is different than the first icon." RIB at 77. Samsung's proposed construction is intended to rule out the possibility that if the two icons are entirely identical, the first icon is necessarily displayed when the second icon is displayed and vice versa. *See id*. at 78.

This dispute, too, is not relevant for infringement purposes because, as shown below, all the relevant icons are different. In any event, the claim recites:

> . . . wherein the first user operation is input to the touch panel in response to a first icon displayed on the display panel being touched by a user,
>
> wherein the third user operation is input to the touch panel in response to a second icon displayed on the display panel being touched by a user,
>
> wherein the first icon and the second icon are displayed exclusively in a same position on the display panel, and
>
> wherein the controller is configured to control the display panel such that the second icon is not displayed when the first icon is displayed, and the first icon is not displayed when the second icon is displayed.

103 patent at cl. 1. Although in the preferred embodiment the two buttons have the same shape but different text, namely, "View on TV" (first icon) and "View on Cellular" (second icon), the claim language seemingly does not rule out the possibility that the first and second icons may be identical. *See* 103 patent at 7:25-64, Fig. 4. In that situation, it would be impossible to distinguish the two icons, as Samsung correctly notes. RIB at 78 (citing Hr'g Tr. (Bederson) at 824:2-9).

Samsung's proposed construction, however, improperly eliminates the timing element of the claim; if two different icons appear simultaneously the claim would be satisfied under Samsung's proposal but not under the actual claim language. *See* CIB at 82-83. The better approach is to add Samsung's proposal into the claim language, to avoid any ambiguity over which is the first icon and which is the second icon, rather than to substitute Samsung's language wholesale.

[redacted]

Accordingly, "the second icon is not displayed when the first icon is displayed," is construed as "the second icon is not displayed when the first icon is displayed, and the first icon and the second icon are not identical."

D. Infringement

For reference, claim 1 of the 103 patent, with limitation identifiers, requires:

[1pre] A smartphone comprising:

[1a] a communication unit configured to communicate with a cellular base station via a cellular connection and receive a webpage from an Internet;

[1b] a display unit comprising a touch panel arranged to display the webpage received by the communication unit, wherein the display unit is configured to further display a setting screen for designating an external device;

[1c] a data transmitting and receiving unit configured to conduct wireless communication with the external device configured to execute video processing for displaying the webpage on an external display which is different from the display unit of the smartphone;

[1d] the touch panel to which a user operation is inputted, wherein the touch panel is configured to receive an input of identification information to designate the external device from a user on the setting screen:

[1e] a memory configured to store software to implement a browser to display the webpage on the display unit, wherein the webpage is received from the Internet; and

[1f] a control unit configured to:

[1g] during the displaying of the webpage on the display unit, in response to the touch panel receiving, at a first point of time, a first user operation to display the webpage on the external display of the external device designated by the user, control the data transmitting and receiving unit to conduct communications with the external device to display, on the external device, the webpage that is being displayed on the display unit;

[1h] after the displaying of the webpage commences on the external display of the external device, in response to the touch panel receiving, at a second point of time, a second user operation to control the displaying of the webpage on the external display, control the data transmitting and receiving unit to transmit information reflecting the second user operation to the external device so that displaying of the

[redacted]

> webpage on the external display reflects the second user operation, by which the smartphone is made to serve as a remote control device;
>
> [1i] during displaying of the webpage on the external display, in response to the touch panel receiving, at a third point of time, a third user operation instructing to terminate the displaying of the webpage on the external display by the external device, control the data transmitting and receiving unit to transmit information related to the third user operation to terminate displaying of the webpage on the external display, and terminate control of the smartphone to serve as the remote control device; and
>
> [1j] after display of the webpage on the external device is terminated based on the third user operation, control the display unit to continue to display the webpage;
>
> [1k] wherein the first user operation is input to the touch panel in response to a first icon displayed on the display panel being touched by a user,
>
> [1l] wherein the third user operation is input to the touch panel in response to a second icon displayed on the display panel being touched by a user,
>
> [1m] wherein the first icon and the second icon are displayed exclusively in a same position on the display panel, and
>
> [1n] wherein the controller is configured to control the display panel such that the second icon is not displayed when the first icon is displayed, and the first icon is not displayed when the second icon is displayed.

103 patent at cl. 1 (annotated). In support of its theory, Maxell generally relies on testimony from its expert, Dr. Ravin Balakrishnan, and test results showing operation of the S25 representative Accused Product using Smart View and an associated external display. *See generally* CIB at 83-99. Maxell addresses both split-screen and full-screen mode, but also asserts that "there is no functional difference between the Smart View application operating in full-screen mode and in split-screen mode." *Id.* at 91.

Samsung does not dispute the Accused Products practice limitations [1pre]-[1c], [1e]-[1f], and [1i]-[1j]. *See* RIB at 78-87; RRB at 49-58. In light of the expert testimony and evidence cited, Maxell has shown these limitations are met in the Accused Products. *See* CIB at 83-84, 86, 93; CX-0860C; CX-030C; CX-0111; CX-0149. In particular, the S25 is a smartphone configured to

[redacted]

communicate with a base station, having a display unit with a touch panel and configured to display a setting screen for designating an external device, and also having a data transmitting and receiving unit for communicating wirelessly with the external device. *See* Hr'g Tr. (Balakrishnan) at 475:12-477:2, 478:22-479:4. It also has a control unit and a memory configured to display a web browser, and in response to a user instruction to terminate display of the webpage on the external device it continues to display the webpage on the display unit but terminates control of the external device. *See id*. at 479:9-16, 496:5-497:18.

1. Limitation [1d]

Limitation [1d] is in dispute, however. Limitation [1d] recites: "the touch panel to which a user operation is inputted, wherein the touch panel is configured to receive an input of identification information to designate the external device from a user on the setting screen." *See* 103 patent at cl. 1.

Maxell contends this functionality is met in the S25 because the S25's display includes an integrated touch panel, and this touch panel is configured to receive inputs when a user designates an external device for connection. *See* CIB at 85. According to Maxell, the user can select an external device on the S25 via tapping the corresponding entry on the setting screen, accessible on the S25's touchscreen. *See id*. (citing Hr'g Tr. (Balakrishnan) at 480:6-16; CX-0860C; CX030C; CX-0149).

Samsung argues that the S25 does not receive the claimed "identification information" from the "user" because the external devices themselves provide the information to the S25. *See* RIB at 78-79. According to Samsung, the Wi-Fi direct standard provides that the external devices provide the identification information to the S25, and the S25 then displays the listing of available external devices to the user. *See id.* While Samsung concedes that the user selects the external device from a list of available external devices, Samsung contends that this does not meet the

[redacted]

requirement that the user input the "identification information" to designate the external device. *See id*.

Samsung's view of the claim is too narrow. While the claim recites that the "touch panel is configured to receive an input of identification information to designate the external device from a user on the setting screen," there is no requirement limiting the "identification information" to a particular format, as Samsung contends. In other words, the claim does not exclude a scenario where the touch panel displays a list of external devices, and the user selects the desired external device from this list. One of the disclosed embodiments works this way, and as Dr. Bederson testified, a device's name or model constitutes "identification information." Hr'g Tr. (Bederson) 1243:20-23; *see* 103 patent at 10:49-55.

Samsung further argues that Maxell did not address the "from a user" portion of this limitation. RIB at 79. But Dr. Balakrishnan testified about "the Smart View application, and that is [] the touch panel [] configured to receive that input of identification information." Hr'g Tr. (Balakrishnan) at 480:6-16. This is shown below:

[redacted]

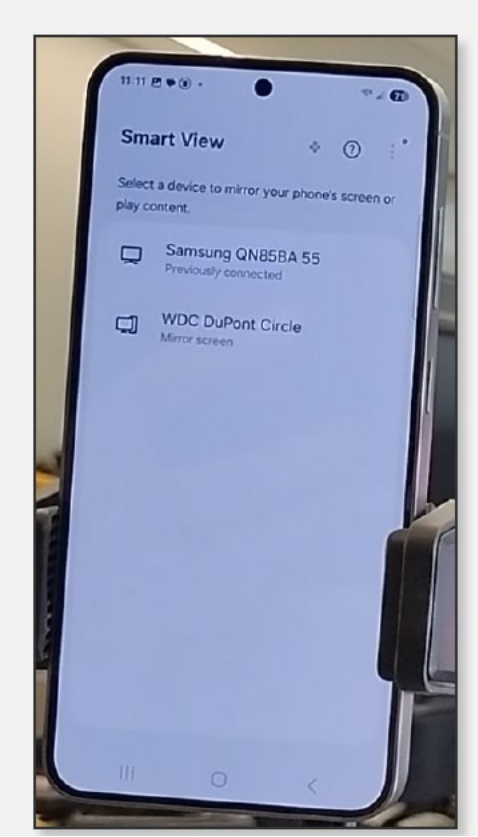

CDX-0004C.0025 (annotating CX-0149). Samsung does not dispute that the smartphone includes a touchscreen, nor that the settings screen displays a list of external devices to the user. Given this, the smartphone is configured to receive the user's touch that provides the identification information, and limitation [1d] is satisfied by the S25.

2. Limitation [1g]

Limitation [1g] recites a control unit configured to, "during the displaying of the webpage on the display unit, in response to the touch panel receiving, at a first point of time, a first user operation to display the webpage on the external display of the external device designated by the user, control the data transmitting and receiving unit to conduct communications with the external device to display, on the external device, the webpage that is being displayed on the display unit." 103 patent at cl. 1. Maxell identifies multiple functions and components of the S25 which satisfy this limitation, including the S25's Smart View interface in split view mode, which shows the

[redacted]

webpage on the S25 display, and allows the user to select a device, such as a Samsung television, so that the S25's Qualcomm chipset is controlled to communicate with the television and display the same webpage. *See* CIB at 86; Hr'g Tr. (Balakrishnan) at 490:6-491:22 (citing CDX-0004C.34-.36).

Samsung presents three arguments that Maxell has not shown that the S25 practices this limitation. First, Samsung argues that the "first user operation" identified by Maxell is associated with designating the external device rather than directing the S25 to display the webpage on the selected external device. *See* RIB at 79-80. In other words, Samsung advances a claim construction argument that the plain language of the claim requires the "first user operation" to occur after the designation of the external device.

Although the parties agreed on the construction of the first few clauses of this limitation, that construction does not resolve the present dispute. *See* CIB at xvii; RIB at xxiii. Limitation [1g] does use the past tense form of "designated," and Samsung argues from this that the "designation" of the external device must occur before the "first user operation." *See id*. But the claim covers an apparatus configured in a certain way, not a method, so the timing of the various claimed operations is not clearly limiting. Furthermore, the previous use of "designate" occurs both in limitations [1b] and [1d], and both of those limitations recite components of the smartphone distinct from the control unit. That is, those limitations lay the groundwork for the components used to designate the external device. Limitation [1b] recites: "the display unit is configured to further display a setting screen for designating an external device," and limitation [1d] recites: "the touch panel is configured to receive an input of identification information to designate the external device from a user on the setting screen." Neither limitation requires that the designation of the external device occur at a particular point in time, because they are simply describing components

[redacted]

of the smartphone—the display unit and the touch panel, respectively—that operate to receive user input designating an external device.

Moreover, Samsung requires too much from the use of the past tense of "designated." The claim recites a "first point of time," but that is associated with causing the webpage to be displayed on the external device. That is, the "first user operation" is received on the touch pad, and this user operation communicates to the control unit that it should "display the webpage on the external display of the external device designated by the user." There is nothing in the claim language excluding a scenario where the "first user operation" also designates the external device.

Samsung cites *Rothschild Connected Devices Innovations v. Coca-Cola* as supporting that "[a]s a matter of logic and basic grammar, the external device must be designated in advance of limitation 1[g]." RIB at 79-80 (citing 2025 WL 2964300 (Fed. Cir. Oct. 21, 2025)). In *Rothschild*, the Federal Circuit concluded that a claim limitation reciting "a communication module configured to transmit the identity of the user and the identifier of the beverage to a server over a network, receive user generated beverage product preferences based on the identity of the user and the identifier of the beverage from the server and communicat[e] the user generated beverage product preferences to controller," must be configured to perform its steps in the order in which they are written. 2025 WL 2964300 at *1-*3. Here, though, no language in claim 1 recites that the control unit, or some other component of the smartphone, designates the external device before the first user operation is received.

Samsung secondly argues that the S25 does not meet limitation [1g] because Maxell's theory requires multiple taps, which cannot occur at the same "first point of time." *See* RIB at 80-81. But nothing requires the "first user operation" to be a single tap, and in any event Maxell maps (among other actions) the single tap required to select a device in split view mode as the "first user

[redacted]

operation." *See* CIB at 86. Samsung cites a portion of the specification that disparages prior art leading to "an increase in the number of operation steps" (*see* RIB at 81 (citing 103 patent at 2:56-3:17)), but the claim language is clear despite the specification.

Samsung lastly argues that the S25 does not meet limitation [1g] because the alleged "first user operation" does not occur "during the displaying of the webpage on the display unit." *See* RIB at 81-82. According to Samsung, the S25 does not "display the webpage" when the user accesses the Smart View tile or the device listing. *See id.* But in split view mode, the webpage continues to be displayed on the S25, along with the external device list:

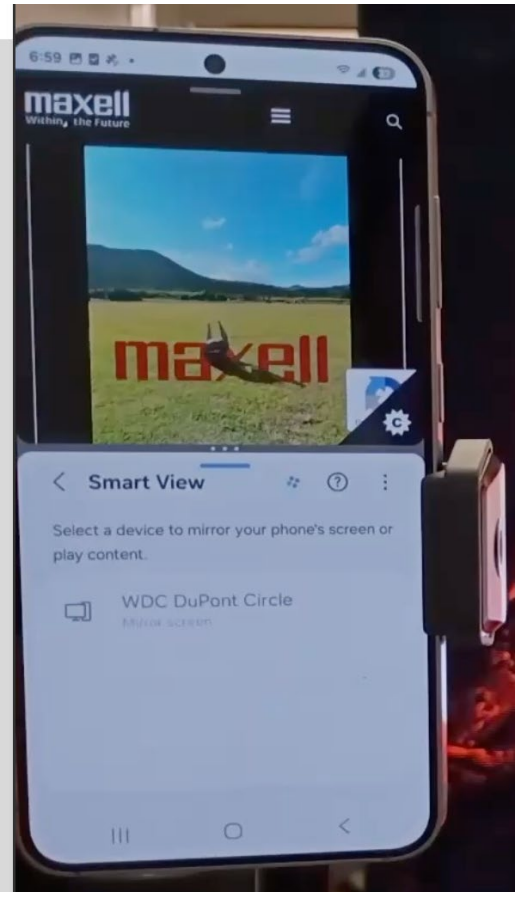

See Hr'g Tr. (Balakrishnan) at 540:12-541:4 (citing CDX-0004C.32 (annotated)). Samsung further argues that the webpage is not actually displayed, because a user cannot click on links, zoom in, or play videos. *See* RIB at 81-82. The claim does not require this functionality, however,

it merely requires display of the webpage, which clearly occurs, and in any event CX-0145, a video showing use of the S25, demonstrates that videos may in fact be played when the webpage is displayed in split view mode. *See* CX-0145 (file entitled "samsung galaxy s25 smart view video 4"). So the S25 meets limitation [1g] at least in split view mode.

3. Limitation [1h]

Samsung contends that the S25 does not practice limitation [1h] because it does not "serve as a remote control device" under its construction of "remote control device." RIB at 82-84. As explained above, Samsung's proposed construction has been rejected and the term "is made to serve as a remote control device" is construed as "is configured to remotely control the external device's display." Samsung does not appear to dispute that the S25 meets this definition, because the external device "mirror[s]" the S25's display. *See* RIB at 82-84, RRB at 54-55.

With that mirroring enabled, user operations performed on the S25 (*e.g.*, scroll, select, zoom, play/pause) are transmitted and reflected on the external device in real time using Miracast Wi-Fi Direct. *See* Hr'g Tr. (Balakrishnan) at 465:4-466:15, 486:1-487:1, 493:19-495:1; Hr'g Tr. (Bederson) at 1227:18-1228:5. Once the S25 begins displaying the webpage on a TV, the user can scroll the webpage, tap links, zoom, or play/pause embedded video on the S25. *Id*. When the user presses "play," "pause," or scrolls the webpage on S25, the resulting display change appears on the television in real time. *See id.* This is sufficient to satisfy limitation [1h].

4. Limitation [1k]

As for limitation [1k], which recites "wherein the first user operation is input to the touch panel in response to a first icon displayed on the display panel being touched by a user," Samsung disputes the S25 meets this limitation to the extent that the S25 does not receive a first user operation as discussed above regarding limitation [1g]. *See* RIB at 85. However, also as discussed above, the S25 does receive a first user operation when the user accesses the Smart View tile from

the settings menu and generates a split view, and then performs the first user operation by selecting the external device. *See* Hr'g Tr. (Balakrishnan) at 501:1-13 (citing CDX-0004C.50).

Moreover, the S25 meets the remainder of limitation [1k] at least in split view mode. As discussed above, "icon" is construed to have its plain and ordinary meaning, which includes the combination of text and a shape. As Dr. Balakrishnan explained, the "first user operation" is entered via touch on a first icon shown on the S25's display:

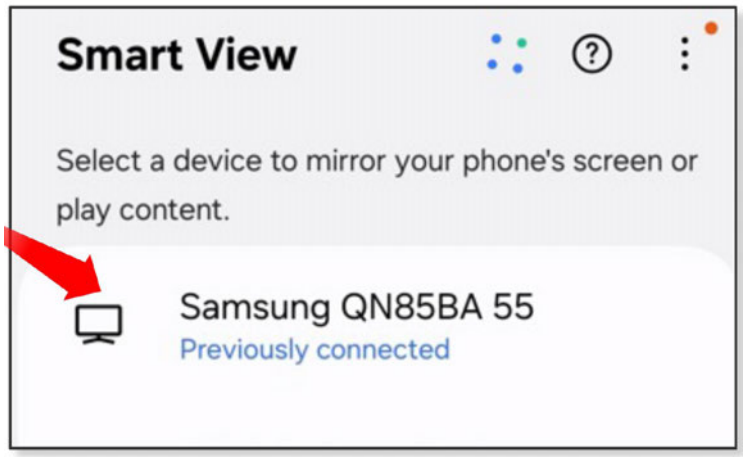

CDX-0004C.50; *see* Hr'g Tr. (Balakrishnan) at 501:1-13; CX-0149. The user invokes Smart View by touching the Smart View icon presented to the user in the Quick Panel. *See* Hr'g Tr. (Balakrishnan) at 501:1-13. The "first user operation" is input "in response to a first icon . . . being touched." *Id*. And the icon consists of text in different colors with a stylized television to the left, which satisfies the construction of "icon" under either party's construction, so the dispute over the interpretation of this word is not actually germane.

5. Limitation [1l]

Regarding limitation [1l], Samsung argues that Dr. Balakrishnan's alleged first and second icons are in fact the same icon. According to Samsung, its source code demonstrates that the first icon and the second icon are the same because the same SmartMirroringTile.java source code file creates and updates the Smart View tile on the S25's display. *See* RIB at 85 (citing Hr'g Tr.

[redacted]

(Bederson) at 1231:3-1232:9; Hr'g Tr. (Kim) at 1201:22-1202:22). However, Samsung concedes that "[t]he method updateState() at lines 190-214 changes the Smart View tile's label and subtext after the S25 starts a Smart View session; that is, it changes how the icon looks." *Id.* at 85-86 (citing Hr'g Tr. (Bederson) at 1231:3- 1232:9; Hr'g Tr. (Kim) at 1201:22-1202:22).

As explained above, the "second icon" is construed to require that the first and second icon are not identical. As Samsung admits, the first icon is not identical to the second icon because the "label[s]" are different, so the party's claim construction dispute was not a genuine one in the first place. CIB at 85-86. And as Dr. Balakrishnan testified, the second icon appears different from the first icon when the user swipes down to access the Quick Panel because it is highlighted or textually altered to show active mirroring, and functions as a control to end the ongoing connection. *See* Hr'g Tr. (Balakrishnan) 496:10-497:25, 485:2-487:24. Dr. Bederson confirmed that the Smart View icon in the Quick Panel includes different text when a device is connected. *See* Hr'g Tr. (Bederson) at 1246:6-1248:3. Dr. Balakrishnan illustrated this with screenshots from CX-0149:

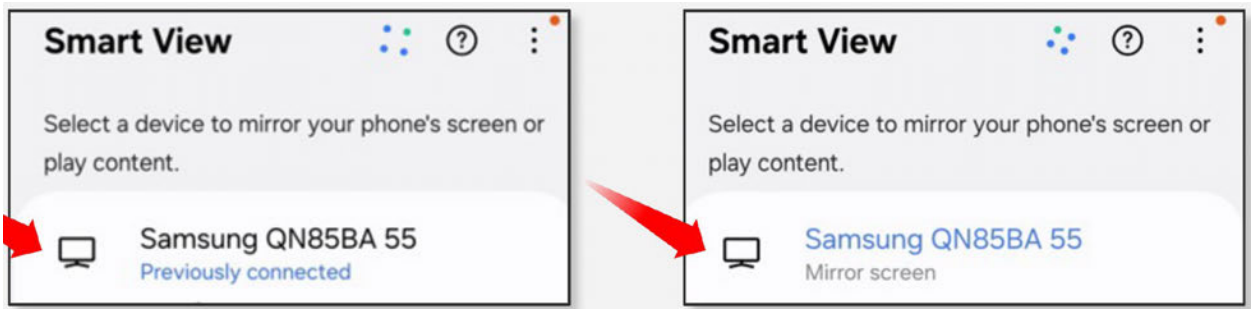

Hr'g Tr. (Balakrishnan) at 502:17-503:18 (citing CDX-0004C.54). This is sufficient to satisfy limitation [1l].

6. Limitation [1m]

Limitation [1m] is the dispositive element of claim 1, and its phrasing is odd: "wherein the first icon and the second icon are displayed exclusively in a same position on the display panel."

Although Samsung alludes to the prosecution history, the parties raise no actual claim construction dispute over this language, so it is given its plain and ordinary meaning. *See* RIB at 87. And that plain and ordinary meaning is narrow, because "a same position" requires the two icons to be located not merely "substantially" or "approximately" in the same position, but actually in precisely the same position, while "exclusively" requires that the two icons appear in the same position in every case, that is, regardless of which mode the smartphone is in. The scope of this language is so narrow that designing around it would seem to be a simple matter for a POSITA.

Relatedly, the scope of the language is also so narrow that proving satisfaction of the limitation is unnecessarily difficult, which is why Maxell's infringement case fails. Maxell offers evidence that in some modes the first and second icons appear in the same position on the smartphone screen. *See* Hr'g Tr. (Balakrishnan) at 502:17-503:18 (citing CDX-0004C.54). But as Samsung points out, Dr. Balakrishnan did not address whether the two icons "exclusively" appear in the same position in split view mode. *See* Hr'g Tr. (Balakrishnan) at 502:17-503:18; RRB at 58. The evidence shows they do not; this can be seen in the various videos in composite exhibit CX-0149. And Dr. Bederson tested the S25 by allowing it to detect a "new television that it hadn't ever connected to or seen before," so that the icon for that device (the "first icon") appeared at the bottom of the device list. Hr'g Tr. (Bederson) at 1234:13-1235:8. For connection using the first icon, the device was at the bottom of the list on the smartphone display, and for disconnection the icon (the "second icon") had moved to the top of the list, that is, the two icons were not in "a same position." *See id*. at 1235:9-14.

Maxell's response to this is to argue that the S25 "need only practice the limitation[] in at least one configuration." CIB at 99; *see* CRB at 57. But as Dr. Bederson noted, if the two icons only "sometimes" appear in the same position, "that completely reads out the word 'exclusively.'"

Hr'g Tr. (Bederson) at 1235:15-22. For his part, Dr. Balakrishnan virtually conceded that at least smart view mode does not infringe, because the movement of devices on the device list is "not the scenario I'm accusing of infringement." Hr'g Tr. (Balakrishnan) at 536:21-537:1.

On balance, Maxell has not shown satisfaction of limitation [1m] by the S25.

7. Limitation [1n]

As for limitation [1n], "wherein the controller is configured to control the display panel such that the second icon is not displayed when the first icon is displayed, and the first icon is not displayed when the second icon is displayed," Samsung argues that the S25 does not practice this limitation because the alleged first and second icons are the same icon. *See* RIB at 87 (citing Tr. (Bederson) at 1235:23-1236:10). As explained above, this argument is rejected because it is undisputed that the icons include different text, and are therefore not identical, under the two different situations (i.e. before connection to the external display and before disconnection from the external display). Therefore, the S25 satisfies limitation [1n].

Overall, however, Maxell has not shown that the S25 meets all limitations of claim 1 of the 103 patent. Accordingly, infringement of the 103 patent has not been proven by any Accused Product.

8. Samsung Redesigned Products

Samsung argues that the 103 Redesign Products are subject to adjudication in this investigation. RIB at 91-92. Maxell's briefing confirms there is no dispute as to this issue. *See* CIB at 105; CRB at 63. In light of the expert testimony and evidence cited, Samsung has shown that the 103 Redesign Products are subject to adjudication. *See* CIB at 91-92; Hr'g Tr. (Bederson) at 1239:19-1240:8, 480:17-481:2, 496:10-497:25; Hr'g Tr. (Kim) at 1203:7-17, 1205:3-8 RPX-5C-9C; RPX-31C; RX-357C; RX-358.

[redacted]

Samsung argues that the 103 Redesign Products do not practice claim 1 for two reasons, neither of which pertain to limitation [1m]. RIB at 92-94. First, Samsung argues that the Smart View tile now always displays the same text throughout a Smart View session, so that the first and second icons are now identical. *Id.* at 92-93. Maxell does not contend that the Smart View tile is the first or second icon in the 103 Redesign Products, however. CIB at 105. According to Maxell, the 103 Redesign Products still infringe because the display still presents different device entry icons, that is, different text, in the Smart View application interface, as shown below.

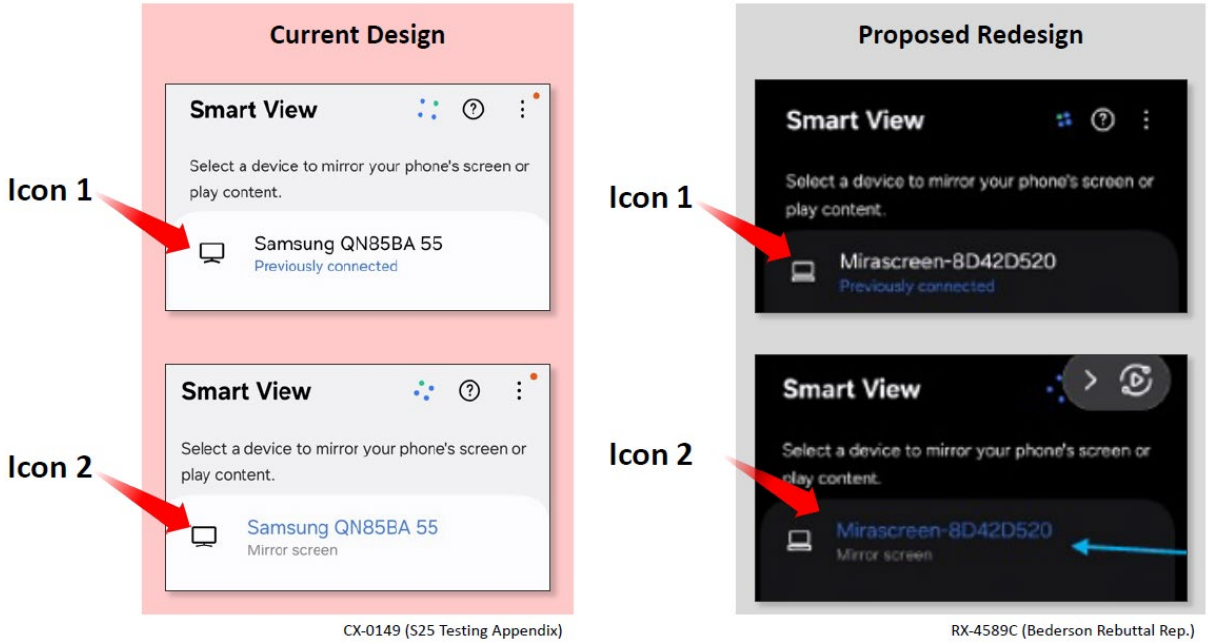

CX-0149 (S25 Testing Appendix) RX-4589C (Bederson Rebuttal Rep.)

CDX-0004C.57. Moreover, the split view mode is the most clearly infringing functionality, so this proposed aspect of the redesign does not appear to alter the infringement analysis.

Second, Samsung argues that the user must now tap a device listing in Smart View mode mode to terminate a session. *See* RIB at 93. Again, though, the split view mode is the most clearly infringing functionality, so it is not clear what difference this makes. And Dr. Balakrishnan did not accuse the "device name" alone as the first icon and second icon, as Samsung alleges. *See id.*

[redacted]

(citing Hr'g Tr. (Balakrishnan) at 504:20-505:20). Therefore, the 103 Redesign Products meet most limitations of the claims, but not [1m], and so Maxell has not shown that they infringe.

E. Domestic Industry – Technical Prong

Samsung does not dispute that the DI Products practice limitations [1pre]-[1c], [1e]-[1f], and [1i]-[1j]. *See* RIB at 88-90; RRB at 58-59. In light of the expert testimony and evidence cited, Maxell has shown these limitations are met in the DI Products. *See* CIB at 99-105; Hr'g Tr. (Balakrishnan) at 477:6-482:24, 481:7-482:24, 488:2-25, 498:3-499:15. As with the S25, though, Samsung disputes the remaining limitations.

1. Representativeness of the 103 DI Products

Dr. Balakrishnan analyzed the Moto G Power 5G 2024 and the Moto Razr 2024 in detail, and concluded that they are representative of all 103 DI Products. *See* Hr'g Tr. (Balakrishnan) at 470:16-472:4. In particular, they share the same hardware components required by claim 1, including a chipset, and thus the ability to run programs, cellular and Wi-Fi capability, a touch panel, and memory, and they share the same application software, called Screen Cast. *Id*. Samsung is correct that Dr. Balakrishnan's opinion is a bit conclusory, because it is not clear how he confirmed that the other 103 DI Products operate similarly, and because he did not personally confirm that Screen Cast is used by all the 103 DI Products. *See* RIB at 88. Samsung offers no countervailing evidence of differences between the various products, however, so the most reasonable conclusion is that the two analyzed smartphones are representative of all 103 DI Products.

2. Limitation [1d]

Maxell argues that the 103 DI Products meet this limitation because they include "a display unit (*e.g.*, AMOLED or LCD screen) comprising a touch panel to which a user operation can be inputted." CIB at 101-102 (citing Hr'g Tr. (Balakrishnan) at 481:7-482:24; testing evidence (CX-

[redacted]

0151; CX-0152); CX-0046C). As Dr. Balakrishnan explained, "the touch panel [is] configured to receive input of identification information" to designate an external device. Hr'g Tr. (Balakrishnan) at 482:2-24. This can be seen from Dr. Balakrishnan's testing:

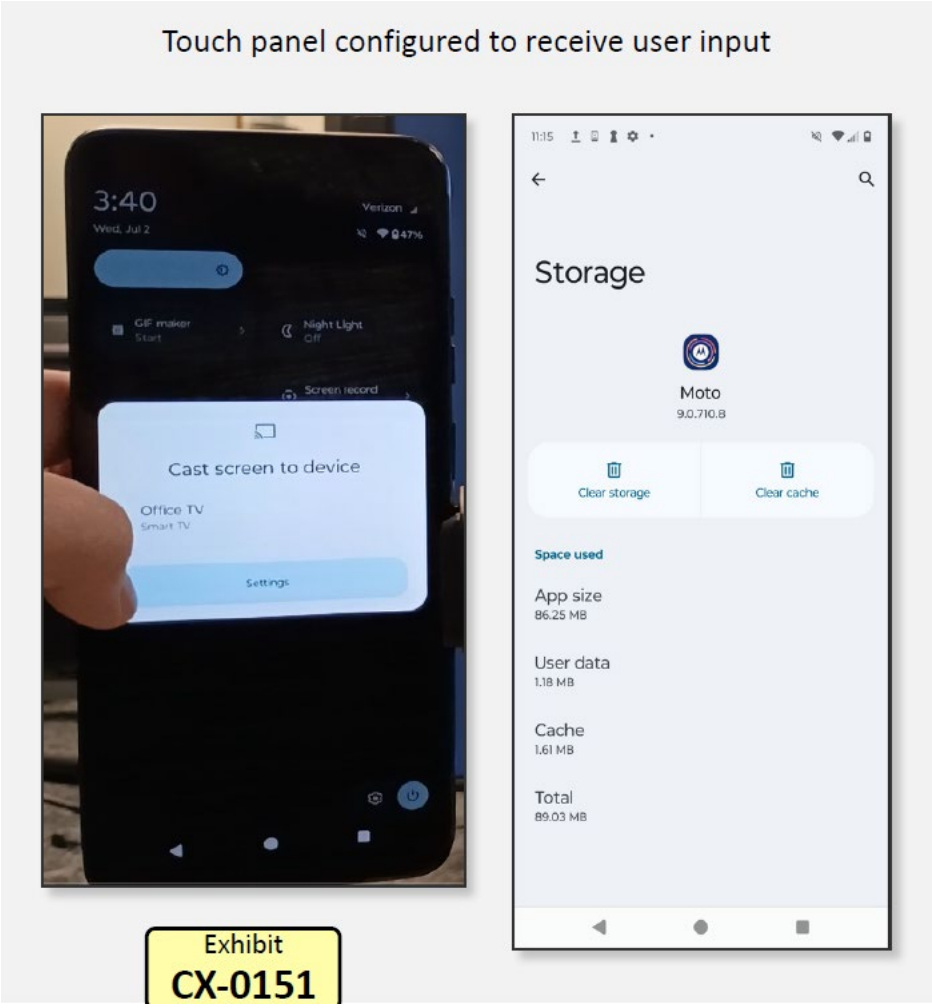

CDX-0004C.27. As with the S25, Samsung argues the 103 DI Products do not receive identification information "from a user," but rather directly from the external devices because the identification information comes from the television, not from the users. *See* RIB at 88. Samsung does not, however, dispute that the smartphone includes a touchscreen, nor that the settings screen displays a list of external devices to the user for designation of an external device. Given all this,

the smartphone is configured to receive the user's touch that provides the identification information to designate the external device, as required by limitation [1d].

3. Limitation [1g]

Regarding limitation [1g], Samsung offers evidence that the displays operate in two modes, "full mode" and "split screen mode." CIB at 100. In split screen mode the functionality is clearly the same as the S25 for limitation [1g] purposes, as shown in one of Dr. Balakrishnan's videos at about the halfway mark. *See* CX-0151 ("moto g power g – Screen Cast 4"). That is, the display of the webpage continues on the smartphone, and an icon for the external device appears, which, when touched by the user, causes the smartphone to transmit the webpage to the external device. *See id*. Samsung raises the same unpersuasive objections as with the S25, and they are rejected for the same reason. *See* RIB at 89-90. Thus, the 103 DI Products satisfy limitation [1g] in split screen mode.

In full mode, however, which is analyzed further below in connection with limitation [1m], the webpage completely disappears from the display:

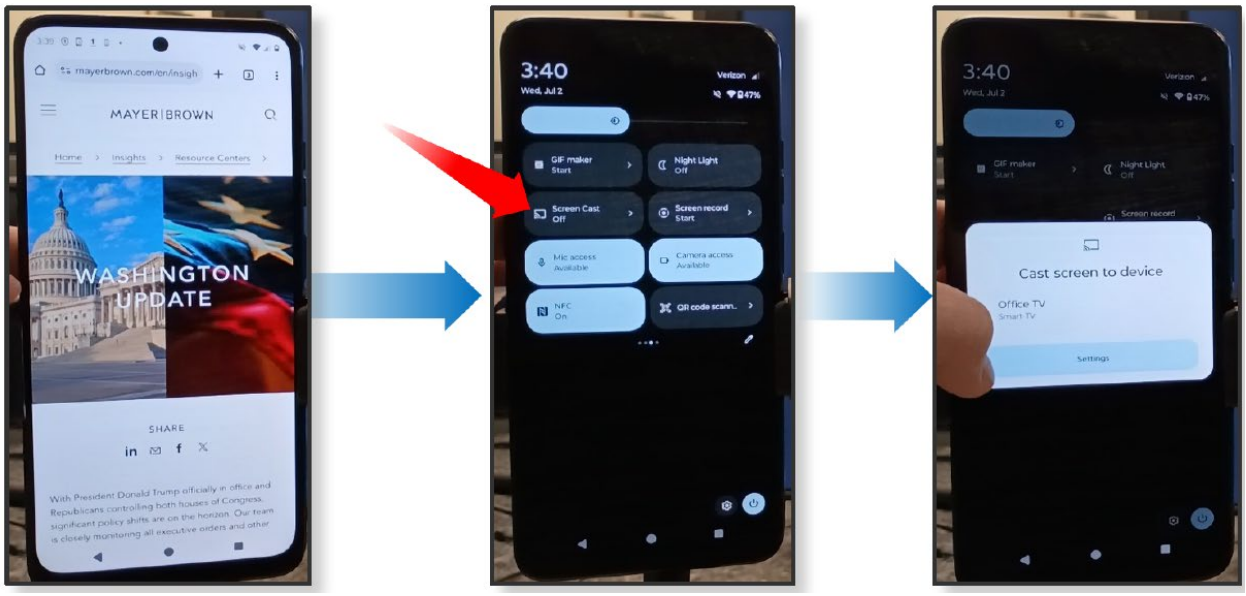

[redacted]

CDX-0004C.38; *see* Hr'g Tr. (Balakrishnan) at 492:15-493:12. On cross examination Dr. Balakrishnan insisted that the webpage was still displayed when the first user operation occurred: "[t]he web page is displayed, and then the panel is pulled down on top of the web page. The web page is still displayed." Hr'g Tr. (Balakrishnan) at 533:1-9. But the webpage cannot be seen at all, so this is clearly wrong, as Dr. Balakrishnan's own demonstratives show. Maxell suggests that "displaying" does not mean "fully visible," but in full mode the webpage on the smartphone is not visible to even the slightest degree. CRB at 961. The agreed-upon construction of limitation [1g], though, requires that the first user operation at the first point of time occur "while displaying of the webpage on the display unit." *See* CIB at 89. That the browser is open does not mean the webpage is displayed; if the user cannot see the webpage because another application has overlain it, the webpage is no longer displayed. So in full mode limitation [1g] is not satisfied.

4. Limitation [1h]

As for limitation [1h], the Screen Cast application allows the user to "mirror" the webpage displayed on the smartphone on the external device, and to control the data going to the external device, so that the smartphone is configured to remotely control the external device's display. *See* Hr'g Tr. (Balakrishnan) at 495:2-496:2. Samsung raises the same unpersuasive objections as with the S25, and they are rejected for the same reason. *See* RIB at 90. Thus, the 103 DI Products satisfy limitation [1h].

5. Limitation [1k]

As for limitation [1k], which recites "wherein the first user operation is input to the touch panel in response to a first icon displayed on the display panel being touched by a user," in split screen mode an icon appears which, when touched, causes mirroring, as shown in one of Dr. Balakrishnan's videos at about the halfway mark. *See* CX-0151 ("moto g power g – Screen Cast

[redacted]

4”). Samsung again raises the same unpersuasive objections as with the S25, and they are rejected for the same reason. *See* RIB at 90. Thus, the 103 DI Products satisfy limitation [1k].

6. Limitation [1l]

Regarding limitation [1l], the Screen Cast icon includes different text when it is used to perform the third user operation in full mode:

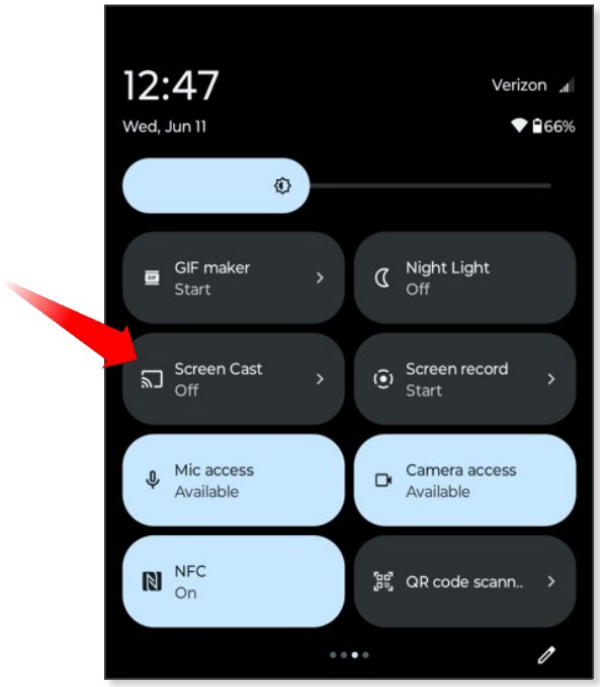

first icon (CDX-0004C.51)

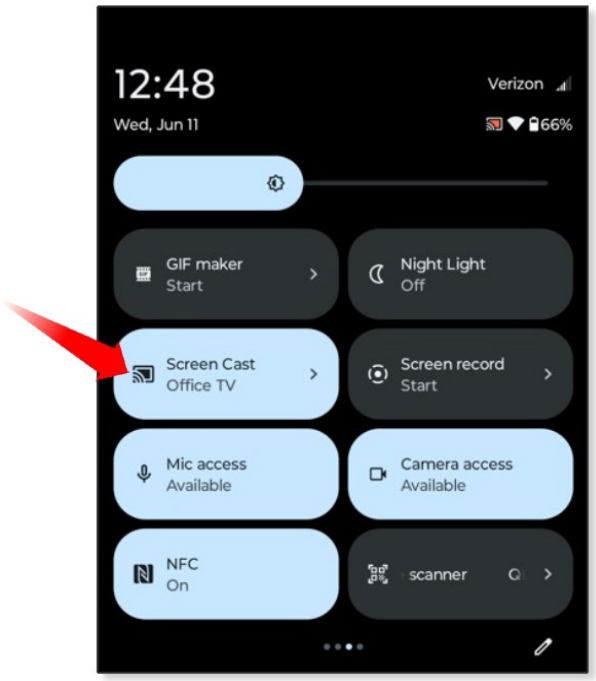

second icon (CDX-0004C.51)

See Hr’g Tr. (Balakrishnan) at 496:10-497:25, 485:2-487:24. The two icons are also different in split screen mode. *See* CX-0151 (“moto g power g – Screen Cast 4”). Samsung again argues, as with the S25, that the first and second icons are in fact the same icon, and again this argument fails. *See* RIB at 90. Thus, the 103 DI Products satisfy limitation [1l].

7. Limitations [1m] and [1n]

[redacted]

Samsung challenges limitation [1n], but does not expressly challenge limitation [1m]. *See* RIB at 90. Because the relevant icons do not appear simultaneously, as discussed below, its challenge to [1n] fails for the same reason it did with the S25.

For [1m], though, Maxell's substantive argument in its entirety is that "the Screen Cast or Smart Connect icons to start or stop mirroring are shown at the same position in the quick panel." CIB at 104; *see* CRB at 62. This does not satisfy the "exclusively" requirement because exclusivity is not even addressed. More to the point, in split screen mode (the only mode that satisfies limitation [1g]) the Screen Cast icons do not operate the same way as the Smart View icons on the S25 in split view mode. This can be seen in one of Dr. Balakrishnan's videos, showing the start of mirroring (left, at about the 1:12 mark) and the end of mirroring (right, at about the 2:05 mark):

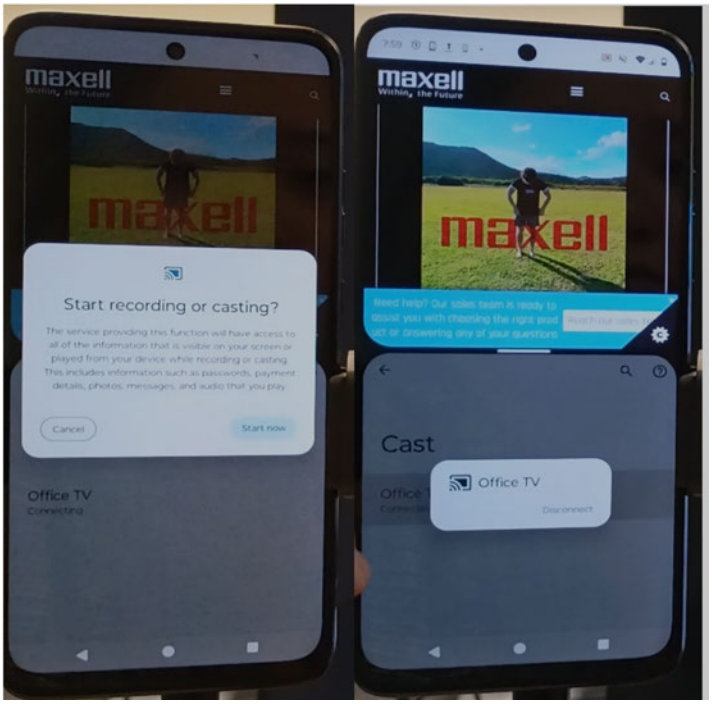

CX-0151 ("moto g power g – Screen Cast 4"). The "Office TV" icons include different text in relatively smaller font ("Connecting" and "Connected") depending on whether the external device is connected, and they appear in the same position. But those icons apparently do not meet limitations [1g] and [1i], because, unlike in Smart View on the S25, a second icon must be touched

[redacted]

to actually perform the needed action; this is also true in "full mode," where the webpage does not appear, as explained above for limitation [1g]. *See id.*; CX-0151 ("moto g power g – Screen Cast Video 2"). Thus, in the left image above, "Start now" actually starts the mirroring, and in the right image above, "Disconnect" terminates the mirroring. CX-0151 ("moto g power g – Screen Cast 4"). And those two icons are clearly not in the same position.

Although Maxell emphasizes split screen mode in its discussion of the 103 DI Products, it never formally identifies whether the first icon is the "Office TV" icon or the "Start now" icon, nor does it identify whether the second icon is the "Office TV" icon or the "Disconnect" icon, nor does it identify whether the first and third user operations involve multiple taps. *See* CIB at 100-105; CRB at 62-63. Assuming the relevant icons are the "Office TV" icons, tapping those icons just brings up the "Start Now"/"Disconnect" screen-in-screen icons, and does not alone cause the webpage to be displayed on the external device, as required by limitation [1g]; assuming the relevant icons are the "Start Now"/"Disconnect" icons, again those do not appear in the same position. *See* CX-0151 ("moto g power g – Screen Cast 4"). Moreover, the two "Office TV" icons appear in the same position in split screen mode, but Maxell does not attempt to show that "Office TV" appears "exclusively in a same position" as the "Screen Cast" icon in full mode, which appears at a higher position on the smartphone display:

[redacted]

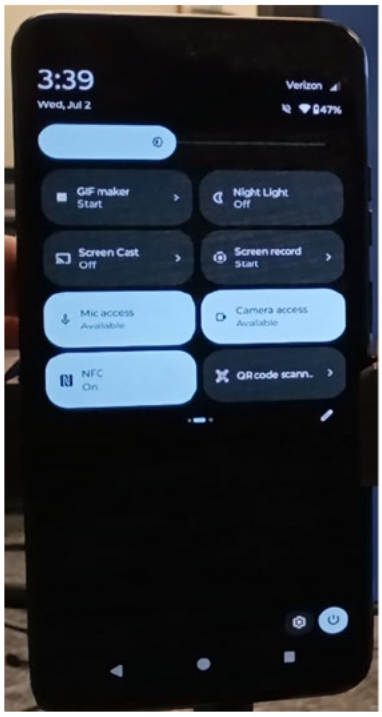

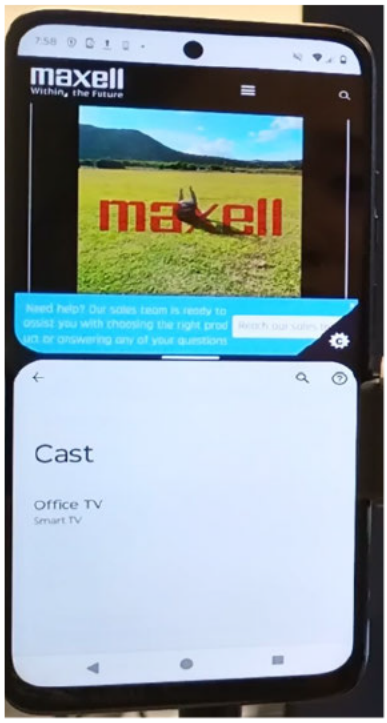

CX-0151 ("moto g power g – Screen Cast Video 2") (left, at about the 1:06 mark); CX-0151 ("moto g power g – Screen Cast 4") (right, at about the 1:10 mark). Dr. Bederson is correct here, too, that if the two icons only "sometimes" appear in the same position, "that completely reads out the word 'exclusively.'" Hr'g Tr. (Bederson) at 1235:15-22. And again, Maxell says nothing about how the "exclusively" requirement is satisfied, and in fact simply ignores it in discussing the 103 DI Products. *See* CIB at 99-105; CRB at 62-63.

In sum, the 103 DI Products have not been shown to practice limitation [1m], although they do practice all other limitations of claim 1 at least in split screen mode. Accordingly, Maxell has not proven that the 103 DI Products practice the 103 patent.

F. Validity

Samsung identifies the following invalidity theories for the 103 patent:

Claim	Theory

[redacted]

1	Rendered obvious under 35 U.S.C. § 103 by Azuma (RX-0042) in view of Chang (RX-0024) and Bocking (RX-0031)
1	Invalid under 35 U.S.C. § 112 as lacking written description

See generally RIB at 94-103.

1. Obviousness

The priority date of the 103 patent is September 26, 2007, and Maxell does not claim an earlier invention date. JX-0005; *see* CIB at 8-9. U.S. Patent Pub. No. 2010/0023599 ("Azuma") was filed on September 12, 2007 and published on January 28, 2010, and qualifies as prior art under 35 U.S.C. § 102(e) (pre-AIA). RX-0042. U.S. Patent No. 9,836,257 ("Chang") was filed on January 18, 2002 and issued on December 5, 2017, and also qualifies as prior art under 35 U.S.C. § 102(e) (pre-AIA). RX-0024. U.S. Patent Pub. No. 2006/0058013 ("Bocking") was filed on September 15, 2004, and published on March 16, 2006, and qualifies as prior art under 35 U.S.C. § 102(b) (pre-AIA). RX-0031. Maxell does not dispute the prior art status of any of these references. *See generally* CIB at 105-110; CRB at 63-68.

a. Disputed Elements

According to Samsung, Azuma alone discloses or renders obvious limitations [1pre]-[1j]. *See* RIB at 96-101 (citing RX-0042 at [0078], [0082], [0091], [0102], [0118]-[0121], [0142], [0217], [0220], [0240], [0241], [0243], [0333], [0240], [0247], [0291]-[0301], [0333], [0517], [0518], Figs. 5, 10, 12, 16, 19). Samsung acknowledges that Azuma does not explicitly disclose the claimed first and second icons, but argues that Bocking discloses the claimed icons and their associated functionality. *Id.* at 101-102 (citing RX-0031 at [0029]-[0030], Figs. 9, 10). Samsung further contends that Azuma combined with Chang and Bocking renders claim 1 invalid as obvious. *Id.* at 96-102.

Claim 1 is presented above. Maxell does not dispute that Azuma discloses limitations [1pre]-[1d]. *See* CIB at 105-110. In light of the expert testimony and evidence cited, Samsung has shown these limitations are disclosed in Azuma. *See* RIB at 96-97; Hr'g Tr. (Bederson) at 833:4-835:17, 837:8-838:14.

For limitation [1e], "a memory configured to store software to implement a browser to display the webpage on the display unit, wherein the webpage is received from the Internet," Samsung contends that it is disclosed in Azuma because Azuma discloses "temporary storage unit 522 and storage unit 520," and "that memory is configured to store software to implement a browser to display webpages received from the Internet on the display unit." RIB at 98 (citing RX-0042 at [0118], [0119], [0121], Fig. 5). Maxell argues that Azuma does not teach this limitation because Azuma does not refer to a browser. *See* CIB at 106. Samsung responds that "linked web pages" amount to a browser, but Dr. Bederson's testimony on that point is entirely conclusory. RIB at 98 (citing Hr'g Tr. (Bederson) at 840:13-841:2). Samsung is correct, however, that Chang discloses an internet browser "stored locally in the information apparatus," one component of which is a memory; this is addressed further below. RX-0024 at 13:25-35, 14:18-39. So the "implement a browser" requirement is satisfied by Chang, and Azuma teaches the other aspects of limitation [1e].

Maxell does not dispute that Azuma discloses limitations [1f]-[1h]. *See* CIB at 105-110. In light of the expert testimony and evidence cited, Samsung has shown these limitations are disclosed in Azuma. RIB at 98-99; Hr'g Tr. (Bederson) at 833:4-835:17, 841:16-844:16, 847:11-21.

For limitation [1i], "during displaying of the webpage on the external display, in response to the touch panel receiving, at a third point of time, a third user operation instructing to terminate

the displaying of the webpage on the external display by the external device, control the data transmitting and receiving unit to transmit information related to the third user operation to terminate displaying of the webpage on the external display, and terminate control of the smartphone to serve as the remote control device," Samsung contends that it is disclosed in Azuma because Azuma discloses "termination of content display and explains that the content may be a webpage." RIB at 99 (citing RX-0042 at [0297], [0328], [0329], [0517], Figs. 9, 17). Maxell argues that Azuma does not disclose "terminat[ing] the displaying of the webpage on the external display" because the cited passages of Azuma describe "transmitting a power-remote control signal that causes the external display device to enter standby mode." CIB at 106 (citing RX-0042 at [0297]). However, Azuma explains that, "[i]n the standby mode, an image cannot be displayed on display unit 630 because power for displaying an image on display unit 630 is off, while the main power is on." RX-0042 at [0221]; *see also id.* at [0328] ("In the standby mode setting process, control unit 610 turns off the image display power, to set the video display device 600 to the standby mode. Then, no image is displayed on display unit 630."). Maxell also argues that "[n]othing in Azuma indicates that a webpage was being displayed in the first place," CIB at 106, but Azuma discloses that "a top page of a WEB site is displayed on video display device 600 and a WEB page of a lower layer linked from the top page is displayed on communication terminal device 500," RX-0042 at [0517]. Thus, Azuma discloses "terminat[ing] the displaying of the webpage on the external display" when the third user operation is received.

Maxell further argues that Azuma does not disclose "terminat[ing] control of the smartphone to serve as the remote control device." CIB at 107. According to Maxell, placing the external display into standby mode does not terminate the remote control functionality of the smartphone. *Id.* (citing Tr. (Balakrishnan) at 1056:6-23). Given the construction of "remote

[redacted]

control," however, the only requirement of terminating "control of the smartphone to serve as the remote control device" is termination of "remote[] control [of] the external device's display." In standby mode there is no control of the external display because there is no display to control. Moreover, by entering standby mode:

> it is possible to display the content that has been displayed on display unit 630 of video display device 600 on the display unit 530 of communication terminal device 500. Therefore, it is possible to easily view while on the road, for example, continuation of a content one viewed on video display device 600.

RX-0042 at [0329]. If the smartphone is "on the road," it is necessarily too far from the external device to control its display or any other aspect of its operation. *See* RIB at 100. Azuma therefore discloses terminating control of the smartphone to serve as the remote control device in response to the touch panel receiving, at a third point of time, a third user operation. Azuma alone thus teaches limitation [1i].

For limitation [1j], "after display of the webpage on the external device is terminated based on the third user operation, control the display unit to continue to display the webpage," Samsung relies on the same portion of Azuma referenced above regarding entry into standby mode. *See* RIB at 100-101 (citing RX-0042 at [0328], [0329], Fig. 17). As explained above, Azuma discloses that the content formerly viewed on the video display device can now be viewed on the communication terminal device. *See* RX-0042 at [0328], [0329]. Maxell argues that Azuma "contains only speculative language stating that it is 'possible' to display content that had been displayed on the external display device on the display of the communication device." CIB at 108 (citing Hr'g Tr. (Balakrishnan) at 1058:21-1059:8). But Azuma contains more than speculative language, and Figure 17 includes step S314, where "content display process M" occurs on the communication terminal device. *See* RX-0042 at Fig. 17. Regarding step S314, Azuma states:

[redacted]

> At step S314, a content display process M is performed. In the content display process M, control unit 510 displays the content based on the content specifying information T included in the received content information T, utilizing VDP 532.

RX-0042 at [0321]. "Content information T includes content specifying information T and content volume information T. Content specifying information T is for specifying the content displayed on display unit 630." *Id.* at [0308]. Azuma thus discloses that the display unit continues to display the webpage once the external device is terminated. *See id.*; *see also id.* at [0328], [0329]. Azuma alone thus teaches limitation [1j].

As noted, Samsung relies on Bocking for disclosure regarding the claimed first and second icons referenced in limitations [1k]-[1n]. These limitations recite:

> wherein the first user operation is input to the touch panel in response to a first icon displayed on the display panel being touched by a user,
>
> wherein the third user operation is input to the touch panel in response to a second icon displayed on the display panel being touched by a user,
>
> wherein the first icon and the second icon are displayed exclusively in a same position on the display panel, and
>
> wherein the controller is configured to control the display panel such that the second icon is not displayed when the first icon is displayed, and the first icon is not displayed when the second icon is displayed.

103 patent at cl. 1. Bocking clearly shows a first icon for a first user operation and a second icon with different text from the first for a third user operation, wherein the first and second icons are displayed exclusively in the same position but not simultaneously:

[redacted]

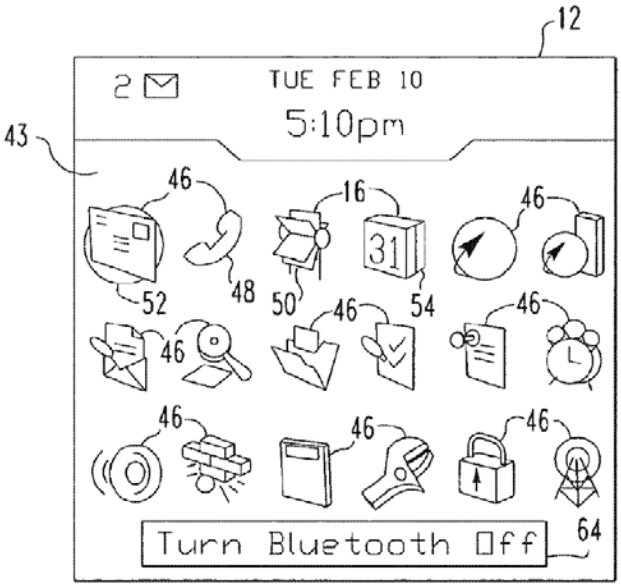

FIG.9

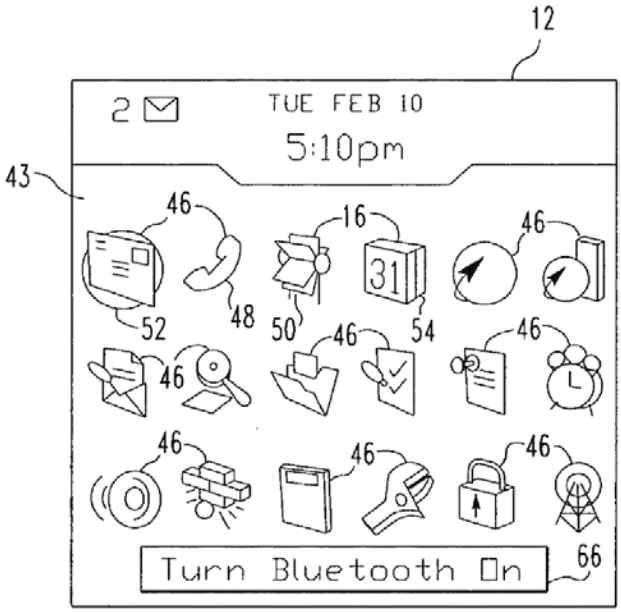

FIG.10

RX-0031 at Figs. 9, 10. Maxell is correct that Bocking's user operations are different, but Samsung cites Bocking only for its teaching of two different icons at the same location and not simultaneously displayed. *See* CIB at 107; RIB at 101. This is sufficient to establish the disclosure of limitations [1k], [1l], [1m], and [1n].

b. Reason to Combine

In sum, the combination of Azuma, Chang, and Bocking teach all elements of claim 1, so to that extent the scope and content of the prior art and the differences between the claimed invention and the prior art weigh in favor of finding obviousness. Maxell, however, argues persuasively that Azuma and Bocking are not analogous art, so that a POSITA would have no reason to combine them with a reasonable expectation of success. *See* CIB at 107. Moreover, although Maxell does not challenge the motivation to combine Chang with either Azuma or Bocking, Samsung makes little effort to show such a motivation. *See* RIB at 95.

Azuma and Chang each disclose a touch screen smartphone that interacts with a TV via wireless communication, and controls the display of the content on the TV. *See* Hr'g Tr.

[redacted]

(Bederson) at 825:10-826:1; RX-0042 at [0517], Abstract; RX-0024 at Abstract. Chang discloses that "[i]nformation apparatus 200 may contain components such as a . . . a memory unit 370 [and] an optional storage unit 360." RX-0024 at 13:25-28. Chang further discloses that "[i]nformation apparatus 200 may contain . . . a document browsing or editing application. . . . An example of a document browsing application is an Internet browser such as Internet Explorer, Netscape Navigator, or a WAP browser":

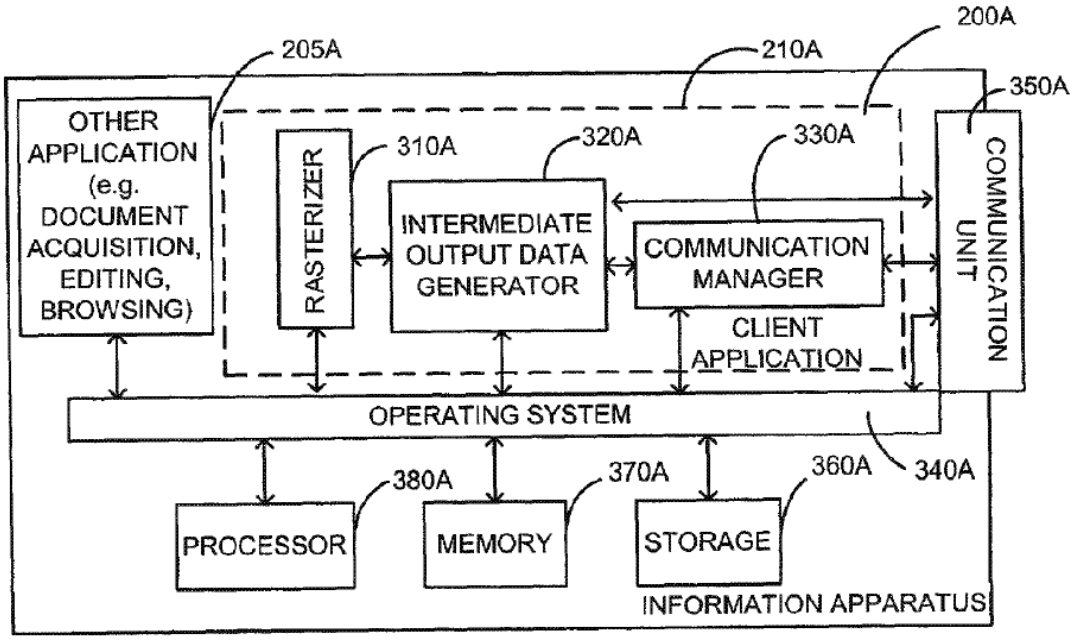

RX-0024 at Fig. 3A, 14:26-28.

Samsung mainly argues that a POSITA would have been motivated to modify Azuma to use Chang's disclosed Wi-Fi for longer distance communications. *See* RIB at 95. Dr. Bederson also opined that the advantage to a POSITA of combining the two references would be to achieve "communications over longer distances." Hr'g Tr. (Bederson) at 827:12-828:4. The crucial element of Chang is its description of using a browser to display a webpage, however, and long distance communications is simply beside the point for claim 1 of the 103 patent. Although it seems likely a POSITA would have known how to modify Azuma to display a webpage using a

browser, as in Chang, Samsung's case for a motivation to combine Azuma and Chang would have been stronger with actual evidence of how a POSITA would do that, rather than on an irrelevant feature in Chang.

Even assuming that a POSITA would have had a reason to so modify Azuma, however, Maxell has made a convincing showing that Bocking is not analogous art to Azuma. *See* CIB at 107 (citing Hr'g Tr. (Balakrishnan) at 1057:10-15). The scope of analogous art includes: (1) art from the same field of endeavor, regardless of the problem addressed, and (2) references reasonably pertinent to the particular problem with which the inventor is involved, even if not within the field of the inventor's endeavor. *See In re Bigio*, 381 F.3d 1320, 1325 (Fed. Cir. 2004). Samsung argues that Bocking and Azuma are both within the same field of endeavor because both "disclose user inputs for controlling the user device to connect with external devices." RIB at 95 (citing Hr'g Tr. (Bederson) at 831:17-832:18; RX-0042 at ¶ [0075]; RX-0031 at ¶ [0029]. Samsung further contends that Azuma and Bocking both disclose a smartphone and a graphical user interface ("GUI"), and that one of ordinary skill in the art would have recognized that Azuma's display could be improved by using Bocking's GUI because it increases the usability of the smartphone, and is a simple substitution of elements well known in the art. *Id.* Thus, Dr. Bederson testified that "Bocking discloses a graphical user interface with two icons, and specifically, describes a number of characteristics of those two icons, and how that benefits the user by increasing usability. A person of skill would have been motivated to modify Azuma's graphical user interface, which also discloses icons, to use Bocking's specific characteristics of its icon layout in order to improve the usability of Azuma." Hr'g Tr. (Bederson) at 831:17-832:18.

Samsung contends that Bocking and Azuma both involve the use of smartphones, but even accepting that as true, they are not analogous art simply because they both involve smartphones.

Smartphones are highly complex devices often involving thousands of components, and the parties agree that one of ordinary skill in the art is not experienced in the broad category of "smartphones," but rather the specific field of applications and user interfaces with display units. *See* Hr'g Tr. (Balakrishnan) at 463:21-464:2; Hr'g Tr. (Bederson) at 815:15-17.

Bocking is directed to "handheld electronic devices [that] include, for instance, personal data assistants (PDAs), handheld computers, two-way pagers, cellular telephones." RX-0031 at [0004]. Bocking explains that conventional devices require users to "navigate through numerous options/settings screens to reach the controls for enabling and/or disabling the Bluetooth communications module." *Id.* at [0009]. According to Bocking there is "a need for a handheld electronic device having an improved, simplified mechanism for enabling and disabling a short-range wireless communications element," "such as a Bluetooth network," to allow Bluetooth functionality while avoiding wasting battery power. *Id.* In other words, Bocking is directed to enabling/disabling a communications protocol, and Bocking teaches a manner of preventing the Bluetooth on/off controls from being "buried" under "numerous options/settings screen." *Id.* Moreover, Bocking is directed to enabling or disabling a module within the handheld electronic device itself, rather than providing any instruction or communication to an external device.

Given the differences between Azuma, Bocking, and the 103 patent, Samsung has not shown that Bocking is from the same field of endeavor as the 103 patent. It is insufficient that Bocking discloses a smartphone or cellular telephone, as Samsung contends. *See* CIB at 96 (quoting Tr. (Balakrishnan) at 1074:21-1076:14). Dr. Bederson did not explicitly testify that Bocking is analogous art to the 103 patent. *See* Hr'g Tr. (Bederson) at 831:17-832:8. While Azuma and the 103 patent are both directed to the control of an external display via a smartphone, Bocking is instead directed to toggling an internal functionality of a handheld electronic device,

and addresses the issue that this toggle may often be difficult to access from the device's home screen. *See* RX-0031 at [0009]. Bocking explains that the benefit of the disclosure is that, "[i]n this manner, the user is able to more readily actively manage the functioning of handheld electronic device to avoid unnecessary and wasteful (in terms of battery power) use of the short-range communications element of the handheld electronic device." *Id.* at [0030]. In short, Azuma and Bocking are not in the same field of endeavor, and a POSITA would not look to Bocking to help solve the problems addressed by the 103 patent, or by Azuma.

Moreover, even if Bocking were analogous art to the 103 patent, Samsung has not shown by clear and convincing evidence that one of ordinary skill in the art would have been motivated to modify Azuma in view of Bocking, with a reasonable expectation of success, to arrive at the claimed combination. Samsung argues that "Bocking discloses a 'first icon' for a 'first user operation,'" and that "[a] person of skill would be motivated to modify Azuma to use Bocking's specific icon design." CIB at 101 (citing Hr'g Tr. (Bederson) at 848:21-849:10). But Bocking discloses placing the icon for the Bluetooth toggle on the home screen, and Samsung cites no disclosure in Bocking tying the use of the first and second icons to any external device, much less a first user operation to display the webpage on the external display of the external device designated by the user. Indeed, as Dr. Bederson testified, Bocking's Bluetooth icons do not appear until the user enables the Bluetooth functionality on the device's Option screen. *See* Hr'g Tr. (Bederson) at 872:17–873:18. And as for a reasonable expectation of success, Dr. Bederson's testimony was wholly conclusory. *See id*. at 832:8-18.

On balance, then, Samsung has not shown that a POSITA would have had a reason to combine all three references, with a reasonable expectation of success, to arrive at the invention of claim 1 of the 103 patent. So even if the scope and content of the prior art and the differences

between the claimed invention and the prior art weigh in favor of obviousness, the level of ordinary skill needed to combine the three references, one of which a POSITA would not even have looked to, weighs heavily against it. Samsung has accordingly not met its burden to prove the obviousness of claim 1 of the 103 patent by clear and convincing evidence.

2. Written Description

"The invention is, for purposes of the 'written description' inquiry, whatever is now claimed." *Vas-Cath Inc. v. Mahurkar*, 935 F.2d 1555, 1564 (Fed. Cir. 1991). "A specification adequately describes an invention when it 'reasonably conveys to those skilled in the art that the inventor had possession of the claimed subject matter as of the filing date.'" *Juno Therapeutics, Inc. v. Kite Pharma, Inc.*, 10 F.4th 1330, 1335 (Fed. Cir. 2021) (quoting *Ariad Pharms., Inc. v. Eli Lilly & Co.*, 598 F.3d 1336, 1351 (Fed. Cir. 2010) (en banc)). The scope of what is claimed (and must be adequately described) is, in turn, determined through claim construction. *Phillips v. AWH Corp.*, 415 F.3d 1303, 1312 (Fed. Cir. 2005) (en banc) ("It is a bedrock principle of patent law that the claims of a patent define the invention to which the patentee is entitled a right to exclude." (internal quotation marks and citation omitted)).

Samsung argues that that the 103 patent provides insufficient written description regarding the "remote control" and "exclusivity" limitations in claim 1. *See* RIB at 102-103. Regarding the remote control limitation, Samsung contends that the 103 patent does not describe screen mirroring, where the claimed smartphone and the claimed external display both display the claimed webpage at the same time. *Id.* This is narrowly true, although as explained in connection with claim construction it does disclose "reflect[ing] operation from cellular in internet display screen." *See* 103 patent at 7:65-67, 10:56-65, Fig. 5. Samsung's assertion is also irrelevant, though, because the claim language is agnostic regarding what devices other than the external unit may display the claimed webpage. The language "is made to serve as a remote control device"

has been construed merely to mean "is configured to remotely control the external device's display," whatever else may happen on other devices. That is all that is required by the disputed claim language, and the specification "expressly discloses that functionality." CIB at 111; *see* 103 patent at 7:65-67, 10:56-65, Fig. 5.

Regarding the exclusivity limitation, Samsung contends that "the '103 patent does not disclose that the icons are restricted to being 'displayed exclusively in a same position on the display panel.'" RIB at 103 (quoting 103 patent at claim 1). This is beside the point, however, because the claim language simply captures the narrowness of the specification's single disclosed embodiment, where the two icons 402 ("View on TV") and 405 ("View on Cellular") are exclusively in the same position:

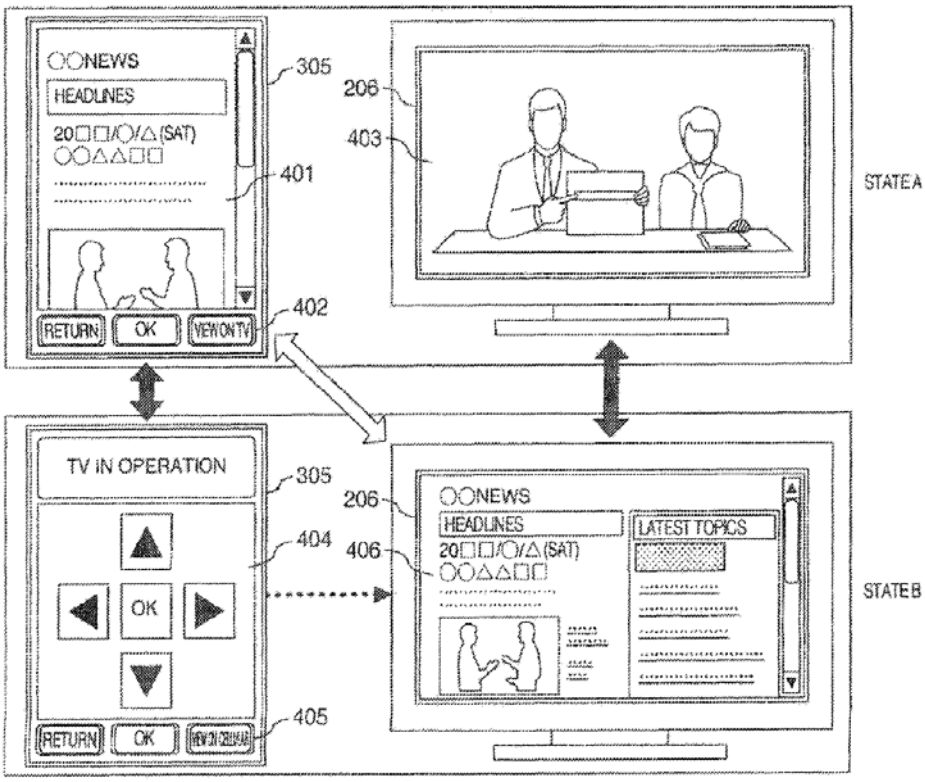

[redacted]

103 patent at Fig. 4; *see Vas-Cath Inc.*, 935 F.2d at 1565 ("drawings alone may provide a 'written description' of an invention as required by § 112"). Samsung has accordingly not shown claim 1 invalid for lack of written description.

VII. U.S. PATENT NO. 11,445,241 AND U.S. PATENT NO. 11,509,953

A. Claims at Issue and Level of Ordinary Skill in the Art

Maxell asserts claims 2, 9, and 30 of the 953 patent and claims 5, 7, 17, and 28 of the 241 patent. *See* CIB at 118. Claims 2 and 9 depend directly on claim 1 of the 953 patent, and claims 5 and 7 depend directly on claim 1 of the 241 patent. For both patents the parties propose substantively identical definitions of a POSITA, which is reasonable and adopted: a person with a bachelors degree in electrical engineering or a comparable field, with one year of experience in wireless communications, and with additional experience substituting for education and vice versa. *See* CIB at 9; RIB at 104.

B. Claim Construction

The parties identify several claim terms as needing construction. *See* CIB at 113-118; RIB at 104-111.

1. "based on a user instruction"

"Based on a user instruction" appears in claims 1 and 30 of the 953 patent. Samsung argues that the "same user instruction" must "cause the processor to perform the claimed control of both claimed radios." RIB at 104-05. Maxell argues that Samsung is seeking to improperly import a limitation from the specification. *See* CIB at 114-15.

The claim recites:

> . . . wherein the processor controls the first radio modem and second radio modem based on a user instruction, such that the first radio modem transmits the picture information to an external device while the second radio modem is connected to the internet or the local area network for transmitting and receiving the information which is different from the picture information.

953 patent at cl. 1. The claim language supports that the processor controls both the first and second radio modems, and the language "such that" further links the claimed "user instruction" to the transmittal of the picture information to an external device. Yet the claim does not require that this "same user instruction" both instruct the transmittal of the picture information and the control of the second radio modem. In other words, the claim language does not foreclose the possibility that a second user instruction has already connected the second radio modem to the internet or the local area network for transmitting and receiving the information which is different from the picture information. The word "while" even establishes the potential for this temporal distinction between the two instructions.

The temporal distinction is also consistent with the general rule of construction that "a" means "one or more." *See Salazar v. AT&T Mobility LLC*, 64 F.4th 1311, 1317-18 (Fed. Cir. 2023). Samsung cites *In re Varma* for the proposition that a single instance of a noun indicates that it must perform all recited actions. *See* RIB at 105 (citing 816 F.3d 1352, 1363 (Fed. Cir. 2016)). Samsung's reliance on *Varma* is misplaced. In *Varma*, the claimed "statistical analysis request correspond[ed] to two or more selected investments." 816 F.3d at 1356. The Federal Circuit found that a statistical analysis request corresponding to a single investment could not satisfy the plain language of the claim because "the question is whether 'a' can serve to negate what is required by the language following 'a': a 'request' (a singular term) that 'correspond[s]' to 'two or more selected investments.' It cannot." *Id.* at 1363. That is not the case here, where "a user instruction" pertaining to the transmittal of the picture information could satisfy the plain language of the claim even if the claimed processor has already controlled the second radio modem such that it is connected to the internet or the local area network. In claim 1, it is the same processor controlling the first and second radio modems, consistent with *Varma*, even if there is more than

one user instruction. *See* 816 F.3d at 1363; *see also Convolve, Inc. v. Compaq Computer Corp.*, 812 F.3d 1313, 1321 (Fed. Cir. 2016) (single processor must perform all recited functions, not multiple processors each performing some functions); *Salazar*, 64 F.4th at 1317-18 (same).

Samsung also relies on an exemplary embodiment described in the specification, which recites:

> The controller 132 and the transmission rate assignment controller 1001 may variably control the radio transmission assignment to the modems 1002 and 1003 in response to an indication from the user. For example, in a situation wherein the user issues an indication to transmit video information by radio via the modem 1002 to the display apparatus 200 while acquiring information from the Internet according to scheme 1 of FIG. 9 by use of the modem 1003, the controller 132 outputs a control signal to the assignment controller 1001 such that the transmission scheme of the modem 1003 is changed from scheme 1 to scheme 2 of FIG. 9 and that of the modem 1002 is set to scheme 1 of FIG. 9 [to] conduct communications.

953 patent at 8:41-53. This passage, however, does not specify the nature of the "indication." On the one hand, the controller may output a control signal changing both the transmission schemes of modems 1 and 2 in response to a single user "indication" to do precisely that. On the other hand, the "indication" could be more than one instruction, or it could be one instruction that pertains only to modem 1002, but the instruction is received after (that is, "while") internet communication has already been established using modem 1003. All scenarios would seem to fall within the plain and ordinary meaning of "based on a user instruction," so Samsung's proposed construction is too narrow.

Accordingly, "based on a user instruction" is given its plain and ordinary meaning, which is "based on one or more user instructions."

2. "means for controlling"

"Means for controlling" appears in claim 28 of the 241 patent within the longer phrase "means for controlling assignment of connection of each of the first, second, and third radio communication circuits . . . wherein the means for controlling controls each of the first and second

[redacted]

radio communication circuit so that the first radio communication circuit transmits video information while the second radio communication circuit connects to the internet or the home network." The parties agree that this term should be construed in accordance with Section 112(6) (*see* CIB at 116-117; RIB at 106), and the parties also agree as to the function, which is dispersed in the claim across three different limitations:

> (1) controlling assignment of connection of each of the first, second, and third radio communication circuits;
>
> (2) wherein when an indication from the user indicates to transmit video information using the first radio communication circuit, controlling assigning of a connection to the first radio communication circuit for transmitting the video; and
>
> (3) controlling each of the first and second radio communication circuit so that the first radio communication circuit transmits video information while the second radio communication circuit connects to the internet or the home network.

CIB at xvii-xviii; RIB at 106. The parties' agreement on these points is reasonable and is accepted. The parties dispute: (1) whether the identified hardware structure (a controller) is adequate by itself as the disclosed structure, and (2) if it is not adequate, whether the specification discloses an algorithm sufficient to perform the claimed function on a general purpose computer. *See* RIB at 106-07.

Certain claim construction principles bear mentioning. Undisputed claim terms generally need not be construed. *See O2 Micro Int'l Ltd. v. Beyond Innovation Tech. Co., Ltd.*, 521 F.3d 1351, 1362 (Fed. Cir. 2008). Because claim construction is a question of law, a judge may nonetheless construe a term independently and need not adopt any party's construction "if [he] determines the parties' proposals to be legally flawed." *Holmberg v. U.S.*, 124 Fed. Cl. 610, 613 (2016) (citing *Praxair, Inc. v. ATMI, Inc.*, 543 F.3d 1306, 1323-24 (Fed. Cir. 2008); *see also Exxon Chemical Patents, Inc. v. Lubrizol Corp.*, 64 F.3d 1553, 1556 (Fed. Cir. 1995). A judge should, however, be "hesitant" to reject every party's proposed construction. *Yoon Ja Kim v. ConAgra*

Foods, Inc., 465 F.3d 1312, 1319 (Fed. Cir. 2006).

Claim 28 of the 241 patent has multiple means-plus-function terms, the construction of which the parties have agreed upon. *See* CIB at xvii-xviii. Although those constructions present infringement issues, as explained below, they need not be addressed further for claim construction purposes. As relevant to the disputed "means for controlling" term, the functions are undisputed, but it is necessary to identify the structure corresponding to the claimed functions, which must be "clearly link[ed]" in the intrinsic evidence, such that the structure is capable of performing all claimed functions. *Rain Computing, Inc. v. Samsung Electronics America, Inc*., 989 F.3d 1002, 1007 (Fed. Cir. 2021); *Williamson v. Citrix Online, LLC*, 792 F.3d 1339, 1351-52 (Fed. Cir. 2015). In cases involving a computer-implemented invention in which the inventor has invoked means-plus-function claiming, more structure may be required than simply a general purpose computer or microprocessor. *See Aristocrat Techs. Austl. Pty Ltd. v. Int'l Game Tech.,* 521 F.3d 1328, 1333 (Fed. Cir. 2008). In such a case, the necessary additional structure is an algorithm implemented on the computer. *See WMS Gaming, Inc. v. Int'l Game Tech.,* 184 F.3d 1339, 1348-49 (Fed. Cir. 1999). On the other hand, if the hardware structure is "capable of performing the [claimed] function absent specialized software," no algorithm is required. *Rain Computing*, 989 F.3d at 1008.

Maxell argues that the corresponding hardware structure is a "controller," specifically controller 132 or controller 2013, as shown in Figures 1 and 3. *See* CIB at 117; CRB at 74. Samsung argues that there is no corresponding structure, and more precisely that whatever hardware performs the function amounts to a general purpose computer requiring an algorithm, and that because no algorithm is disclosed the claim is indefinite. *See* RIB at 106-08. In the alternative Samsung argues that the corresponding structure is either controller 132 executing an

[redacted]

algorithm or controller 132, video interface circuit 131, and interface circuit 133 executing an algorithm. *See id*.

Neither side has it completely correct. As noted, the means for controlling performs three functions: (1) controlling the connection assignment to three different modems (i.e., radio circuits), (2) controlling the connection assignment to the first modem for transmitting video when a user so indicates, and (3) controlling the first and second modems so the first transmits video and the second connects to the internet. The specification describes two embodiments involving more than two radio circuits, at 9:1-32 and Figure 4, and at 13:40-14:4 and Figure 8. Although the written description at 9:1-32 does not disclose a controller, Figure 4 shows both a controller 132 and a separate component labeled 1001 controlling the four modems:

FIG. 4

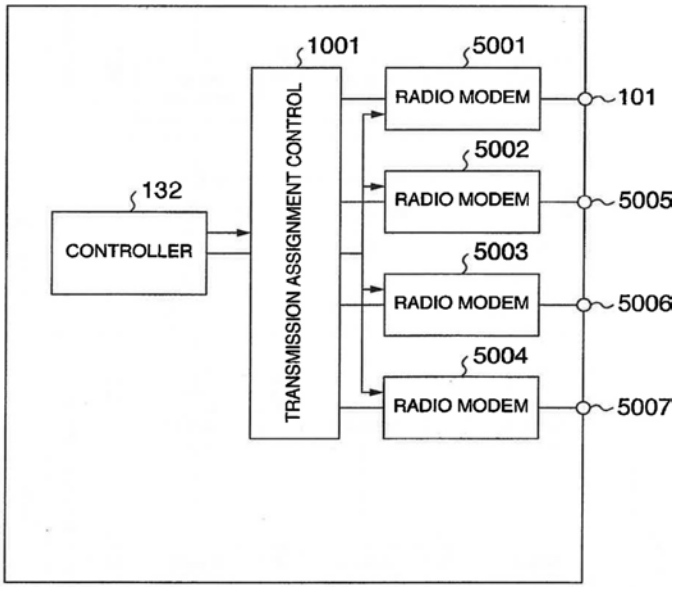

Component 1001 is called both a "transmission rate assignment controller" and a "transmission rate assignment control circuit" (hereafter, "TRA circuit"). 241 patent at 7:49-61.

The controller and TRA circuit plainly work together:

> The controller 1001 variably controls, according to a control signal from the controller 132, the transmission rates respectively of the modems 1002 and 1003

[redacted]

> by variably setting the modulation/demodulation methods, the frequency bands, and the number of carriers respectively for the modems 1002 and 1003. In short, the controller 132 controls distribution of the radio transmission rate of each modem by controlling the transmission rate assignment controller 1001.

241 patent at 7:67-8:8. The specification describes an example where the other two claimed functions are performed:

> The controller 132 and the transmission rate assignment controller 1001 may variably control the radio transmission assignment to the modems 1002 and 1003 in response to an indication from the user. For example, *in a situation wherein the user issues an indication to transmit video information by radio via the modem 1002* to the display apparatus 200 *while acquiring information from the Internet according to scheme 1 of FIG. 9 by use of the modem 1003*, the controller 132 outputs a control signal to the assignment controller 1001 such that *the transmission scheme of the modem 1003 is changed from scheme 1 to scheme 2 of FIG. 9 and that of the modem 1002 is set to scheme 1 of FIG. 9*.

Id. at 8:41-52 (emphasis added). The other embodiment involving more than two radio circuits is to similar effect: "transmission rate assignment controller 9005 operates in a similar way as the transmission rate assignment controller 1001 described above and assigns transmission rates respectively to radio modems 9010 to 9013 according to an instruction from the controller 2013." 241 patent at 13:40-44 and Figure 8.

In short, a controller and a TRA circuit together are both necessary and sufficient to perform all three claimed functions, with the controller controlling the TRA circuit and the TRA circuit executing the assignment. Maxell alleges that only the controller is required, and there are embodiments where the controller controls a single modem, but there is no description, teaching, or disclosed embodiment where the controller alone performs all three claimed functions. *See* CIB at 117; 241 patent at Figures 3, 8. Samsung alleges, as an alternative, that either the controller alone or the controller and two interfaces perform all three functions when properly programmed, but although the interfaces (131 and 133) send data to the modems, they do not perform any claimed function: "while the interface circuit 131 wirelessly transmits video information and audio

[redacted]

information via the modems 5001 and 5002 to the video display apparatus 200, the interface circuit 133 conducts communication via the modems 5003 and 5004 with the network." 241 patent at 9:19-23.

So the correct construction of the "means for controlling" limitation of claim 28 is that it is a combination of a controller and a transmission rate assignment control circuit, together performing the three claimed functions. Moreover, the combination is clearly quite specialized, particularly the TRA circuit, so much so that it does not qualify as a general purpose computer, and no algorithm is needed. Accordingly, notwithstanding the "hesitan[cy]" warranted when rejecting all parties' contructions, in fact no party's construction is correct. *Yoon Ja Kim*, 465 F.3d at 1319. Nor is the claim indefinite under Section 112(6). *See* RIB at 106-08.

3. "an indication from a user indicates to transmit video information using the first radio communication circuit"

"An indication from a user indicates to transmit video information using the first radio communication circuit" appears in claims 1 and 28 of the 241 patent. Samsung argues the plain and ordinary meaning requires "the user to indicate that the first radio communication circuit be used to transmit the video." RIB at 108. Although the parties seemed to have disputed this interpretation at least during the hearing, Maxell no longer advances a different construction. *See* CIB at 114-115. In fact, there does not appear to be a dispute at all anymore, so this term does not require construction.

C. Infringement

In support of its infringement theories, Maxell generally relies on testimony from its expert, Dr. Steven Goldberg. *See generally* CIB at 118-149. The parties stipulated that the Samsung

[redacted]

Galaxy S22 and S25 are representative of all accused products under the 953 and 241 patents.[2] *See* JX-0013C at 4-5. Maxell has shown infringement of asserted claim 9 of the 953 patent. Maxell has not shown infringement of asserted claims 2 and 30 of the 953 patent, or of claims 5, 7, 15, and 28 of the 241 patent by the Accused Products.

1. Claim 1 of the 953 patent

For reference, claim 1 of the 953 patent, from which asserted claim 2 depends, requires:

> 1. [1pre] An information processing apparatus, comprising:
>
> [1a] an image sensing device having an optical system;
>
> [1b] a memory capable of storing picture information obtained by the image sensing device;
>
> [1c] a processor;
>
> [1d] a first radio modem, wherein the first radio modem implements a first transmission scheme to transmit or receive the picture information; and
>
> [1e] a second radio modem, wherein the second radio modem implements a second transmission scheme and connects to an internet or a local area network to transmit and receive information which is different from the picture information,
>
> [1f] wherein the processor controls the first radio modem and second radio modem based on a user instruction, such that the first radio modem transmits the picture information to an external device while the second radio modem is connected to the internet or the local area network for transmitting and receiving the information which is different from the picture information.

[2] Two Accused Products are representative because the parties stipulated that the Samsung Galaxy S22 is representative of the Galaxy S21 5G, Galaxy S21+ 5G, Galaxy S22, Galaxy S22+, Galaxy S22 Ultra, Galaxy A14 5G, Galaxy A23 5G UW, Galaxy A54 5G, Galaxy Z Flip 5, Galaxy Z Fold 5, Galaxy XCover6 Pro, Galaxy S23 FE, Galaxy S23, Galaxy S23+, and Galaxy S23 Ultra, and the Samsung Galaxy S25 is representative of the Galaxy A15 5G, Galaxy A25 5G, Galaxy A35 5G, Galaxy Z Flip6, Galaxy Z Fold6, Galaxy S24 FE, Galaxy S24, Galaxy S24+, Galaxy S24 Ultra, Galaxy S25, Galaxy S25+, and Galaxy S25 Ultra; and the Samsung Galaxy S25 is representative of the Galaxy A15 5G, Galaxy A25 5G, Galaxy A35 5G, Galaxy Z Flip6, Galaxy Z Fold6, Galaxy S24 FE, Galaxy S24, Galaxy S24+, Galaxy S24 Ultra, Galaxy S25, Galaxy S25+, and Galaxy S25 Ultra. JX-0013C at 4-5.

[redacted]

953 patent at cl. 1 (annotated).

a. Elements [1pre] – [1c]

Dr. Goldberg testified that the Galaxy S22 and S25 is a smartphone, which satisfies the information processing apparatus requirement of the preamble. *See* Hr'g Tr. (Goldberg) at 198:19-199:16, 276:9-17. He further testified that each includes include multiple cameras, as well as associated imaging circuits, that meet limitation [1a], which recites "image sensing device having an optical system." *Id*. at 224:20-229:2, 276:17-18; CX-0860C; CX-0849; CX-0852. They include flash storage and RAM memory that are capable of storing picture information obtained by the image sensing device, as recited in claim element [1b]. *See* Hr'g Tr. (Goldberg) at 225:9-18, 276:19-24; CX-860C, CX-0030C, and CX-0211C. Samsung does not expressly contest claim elements [1pre], [1a], or [1b]. *See* RIB at 111-122.

As for element [1c], Dr. Goldberg testified that the S25 and S22 include a CPU or "application processor" within the [redacted]. *See* Hr'g Tr. (Goldberg) at 230:12-238:1, 276:25-277:3; CX-0030C and CX-0211C. Samsung agrees that the S22 and S25 include a "Qualcomm application processor," and does not expressly contest claim element [1c]. RIB at 112.

b. Element [1d]

Limitation [1d] is in dispute, however. That limitation recites: "a first radio modem, wherein the first radio modem implements a first transmission scheme to transmit or receive the picture information." Maxell maps the various modems required by claims 1 and 2 to Wi-Fi, cellular, NFC, and Bluetooth circuits. *See* CIB at 121-22. Samsung does not dispute that the S22 and S25 are capable of communicating using at least Bluetooth and Wi-Fi, but it does contend that Maxell has failed to show separate modems, that is, communication circuits. *See* RIB at 111-116.

[redacted]

The Samsung S25 and S22 each include chipsets with [redacted] *Id.* at 199:17-210:3; CX-0030C; CX-0211C.1; CX-0860C; CX-0190.6-13, 99, 125-127; CX-0325. And Dr. Goldberg testified that both the Samsung S25 and S22 include a "Bluetooth or WiFi modem for sharing pictures via Bluetooth File Share or Quick Share." Hr'g Tr. (Goldberg) at 277:6-11. This is sufficient to establish limitation [1d].

c. Element [1e]

As for element [1e], Dr. Goldberg testified that the S25 and S22 include a cellular circuit that uses LTE and 5G connections to implement a second transmission scheme and connects to an internet or a local area network to transmit and receive information which is different from the picture information. *See* Hr'g Tr. (Goldberg) at 206:1-210:24, 277:12-23; CX-0030C; CX-860C; CX-0211C. Samsung agrees that the S22 and S25 include a "cellular chipset," and does not expressly contest claim element [1e] beyond its dispute over element [1d]. RIB at 115.

d. Element [1f]

Limitation [1f] recites: "wherein the processor controls the first radio modem and second radio modem based on a user instruction, such that the first radio modem transmits the picture information to an external device while the second radio modem is connected to the internet or the local area network for transmitting and receiving the information which is different from the picture information." As explained above, "based on a user instruction" is accorded its plain and ordinary meaning of "based on one or more user instructions," which does not require a single user instruction for controlling both modems.

Again, Maxell maps the claimed processor to the application processor or CPU within each chipset (*see* CIB at 132), and argues that the application processor "controls the assignment of connections" for different radio circuits based on a user's touch command associated with a

[redacted]

particular circuit (*see id.*), specifically the Bluetooth or Wi-Fi modem for sharing pictures and the cellular modem for transmitting and receiving information other than pictures (*see id*. at 132, 146). Samsung discovery responses confirm the presence of the [redacted], which Maxell identifies as the respective application processors. *See* CX-0860C at 75-76; CIB at 131. User instructions in the form of touch commands control each phone's communications functionality. *See* CX-0033C.31; *see generally* CX-0172. Samsung engineer Chan-Woong Park confirmed that in both the S22 and the S25, [redacted] (*see* JX-0021C (Jun. 19, 2025) at 42:10-16, 45:17-46:2), and the Samsung internet browser application, which uses a cellular connection, [redacted] (*see id*. at 46:3-25). And Dr. Goldberg's testing demonstrated that the first modem (whether Bluetooth or Wi-Fi) and second modem (cellular) are able to perform operations simultaneously by transmitting video using the first modem while also downloading a podcast or sending/receiving cellular data using the second modem. *See* Hr'g Tr. (Goldberg) at 262:6-265:10; CX-0849 to CX-0852.

Samsung's proposed construction of "based on a user instruction" has been rejected, and under the correct construction that limitation is satisfied by the user's touch commands. *See* RIB at 121. Samsung otherwise presents multiple objections to this evidence, only three of which merit consideration. *See* RIB at 116-21. First, it contends that Maxell has not shown that the Samsung S22 and S25 include the recited controller because "Dr. Goldberg failed to map physical radio circuitry in the S22 and S25 to the claim limitations," and because Dr. Goldberg "failed to show how the alleged controllers control assignment of specific radio circuits." RIB at 116. Second, and relatedly, Samsung contends that Maxell has not shown that the application processor, which Maxell identifies as the claimed "processor," controls assignment of the radio modems, because

[redacted]

Dr. Goldberg did not show the precise control relationship between the application processor and the specific modem. *Id.* at 116-117. Third, it argues that Maxell and Dr. Goldberg "rely[] on the wrong diagram for the wrong chipset." RIB at 113.

Samsung's points are relevant for the additional elements of claim 2, as explained below, but for claim 1 they make little difference. As noted, [redacted] and Dr. Goldberg's testing shows that Bluetooth and cellular communications can occur simultaneously. It appears undisputed that the [redacted] as its modem, and the relevant functional block diagrams all include a connection indicating that the [redacted] *See* CX-0211C at 2; CX-0045C at 4; CX-0860C, Appendix 1 at 10. The record is unclear as to which modem is in the S25. *See* RIB at 112-13. It is either the [redacted] (*see* CX-0030C; CX-0860C, Appendix 1 at 12) or the [redacted] (*see* CX-0035C at 8), but in either case there is clearly a modem for at least one of the Bluetooth and the Wi-Fi, the functional block diagrams all show that [redacted] they must comply with a particular protocol. Hr'g Tr. (Goldberg) at 306:10-22. This is sufficient to overcome Samsung's objections.

Maxell has thus shown that the accused products practice each element of claim 1 of the 953 patent.

2. Claim 2 of the 953 patent

For reference, asserted claim 2 of the 953 patent requires:

2. [2pre] The information processing apparatus of claim 1, further comprising:

[2a] a third radio modem; and

[2b] a fourth radio modem,

[redacted]

> [2c] wherein both of the third radio modem and the fourth radio modem are capable of transmitting information to an additional external device, and
>
> [2d] wherein the processor controls each of the first radio modem, second radio modem, third radio modem, and fourth radio modem based on one or more user instructions.

953 patent at cl. 2.

The preamble of claim 2 recites "[t]he information processing apparatus of claim 1." As explained above, Maxell has shown that the accused products infringe claim 1 of the 953 patent. As for limitations [2a] and [2b], Maxell lays out the following infringement theories:

Infringing Mode	First radio [1.a] [28.a] [30.f]	Second radio [1.b], [28.b], [30.g]	Third radio [1.c], [28.c], [30.h]	Fourth Radio [5], [30.i]	While limitation [1.j], [28.j], [30.j]
Mode 1 (S22 and S25)	Wi-Fi circuit transmitting video via Quick Share	Cellular circuit connecting to Internet via LTE/5G	NFC circuit transmitting via Samsung Pay	Bluetooth circuit transmitting via BT File Share	Quick Share while connecting to Internet via cellular
Mode 2 (S25 only)	BT circuit transmitting video via BT File Share	Same as Mode 1	NFC circuit transmitting via Samsung Pay	Wi-Fi circuit transmitting video via Quick Share	BT File Share while connecting to the Internet via cellular
Mode 3 (S22 and S25)	Wi-Fi circuit transmitting video via Quick Share	Same as Mode 1	BT circuit transmitting via BT File Share	NFC circuit transmitting via Samsung Pay	Quick Share while connecting to Internet via cellular
Mode 4 (S25 only)	BT circuit transmitting video via BT File Share	Same as Mode 1	Wi-Fi circuit transmitting via Quick Share	NFC circuit transmitting via Samsung Pay	BT File Share while connecting to the Internet via cellular

CIB at 121 (citing CDX-05C.32; CDX-05C.158; CDX-05C.160). Thus, Maxell's "Infringing Mode 1" maps Wi-Fi to the first radio modem, cellular to the second radio modem, the NFC circuit to the third radio modem, and Bluetooth to the fourth radio modem. Maxell's other infringing modes are permutations of this combination, so each infringing mode includes cellular mapped to the second radio modem, while Wi-Fi or Bluetooth is mapped to the first radio modem.

The principal dispute between the parties is as to whether Maxell has shown separate Wi-Fi and Bluetooth radio modems. *See* CIB at 146-47; RIB at 116-117, 122. Maxell contends that (1) discovery responses; (2) S22 and S25 block diagrams; (3) chipset specifications; (4) engineer testimony; (5) S22 and S25 FCC test reports; and (6) product testing demonstrate that each of the S22 and S25 include separate Wi-Fi and Bluetooth circuits. *See* CIB at 123-124.

[redacted]

Starting with discovery responses, Maxell's evidence is equivocal at best. Maxell cites Samsung's interrogatory response, where Samsung responded to an interrogatory regarding accused features and functions to disclose that the S22 includes a [redacted] and the S25 includes a [redacted] where the S22 runs Bluetooth version 5.2 while the S25 runs Bluetooth version 5.4. *See* CX-0860C, Appendix 1. As Dr. Goldberg explained, however, Bluetooth version refers to a version of the Bluetooth specification, rather than a specific chip. Hr'g Tr. (Goldberg) at 301:16-302:8. And as Dr. Buehrer testified, "[y]ou can't simply infer from the protocol" how the actual radio modem (or radio communication circuit) in the chip is configured. Hr'g Tr. (Buehrer) at 1091:2-22.

The evidence from the S22 and S25 block diagrams is similarly inconclusive to establish separate radio modems for the Wi-Fi and Bluetooth radios. Maxell cites CX-0030C for the S25 and CX-0211C for the S22:

[redacted]

[redacted]

As shown above, [redacted].

The Qualcomm chipset specifications are similarly inconclusive. As noted, it is unclear exactly which chipset is used in the S25, and Dr. Goldberg admitted that he had no evidence that the Qualcomm chipsets he analyzed were ever incorporated into Samsung phones. *See* CIB at 124-26; Hr'g Tr. (Goldberg) at 305:24-307:14. Dr. Goldberg instead testified that his analysis was reliable because "[t]he bottom line is they're of the same series. My testimony yesterday and in my reports has been that these architectures are extremely similar, and based on the MIPI alliance protocol, are requirements." *Id.* at 306:14-18.

CX-0035C shows one possible communications modem for the S25:

[redacted]

CX-0035C. The first problem for Maxell is that this specification clearly states that a [redacted] *Id.* The second issue for Maxell is that [redacted]. As Dr. Buehrer explained, this modern chipset may have a sophisticated control structure where Bluetooth and Wi-Fi operate on the same radios:

> [T]here are devices that have a single radio that supports all of WiFi and Bluetooth.
>
> There are also devices that have two radios to support Bluetooth and WiFi, but one for 5 gigahertz WiFi and another for 2.4 gigahertz WiFi plus Bluetooth.
>
> There are also devices that have three radios; one for 2.4 gigahertz WiFi, one for 5 gigahertz WiFi, and one for Bluetooth. It is also possible that you could have two, as Dr. Goldberg suggests, one for Bluetooth and one for all of WiFi.

[redacted]

Hr'g Tr. (Buehrer) at 1092:2-15.

So the evidence from CX-0035C does not support a conclusion that Bluetooth and Wi-Fi have separate radio modems. In fact, this evidence supports a conclusion that, as Dr. Buehrer testified, some devices have radio modems that can support both Wi-Fi and Bluetooth. Otherwise, [redacted] Maxell never addressed that [redacted] in its post-hearing briefing. *See* CIB at 118-128; CRB at 75-93. While Maxell cites the chipset specifications for [redacted] to argue that these chipset specifications are consistent with the [redacted] that Dr. Goldberg testified about, these specifications only similarly confirm [redacted]:

[redacted]

[redacted]

CX-0045C.0004 ([redacted] for S25); *see* CIB at 124-26. One notable consistency across [redacted] *See* CX-0035C; CX-0044C; CX-0045C.

Maxell argues, based on the functional block diagrams, that:

[redacted]

CIB at 125-126. In fact, there are [redacted] so if Maxell's theory here is that [redacted] the required control signal from the processor. *See* RRB at 74-75.

Maxell also makes much of the testimony of Dr. Bederson, Samsung's expert for the 103 patent, who testified regarding the following demonstrative:

[redacted]

CDX-0004C.0024 (annotating CX-0030C). He stated:

[redacted]

Q. Dr. Bederson, you would agree that the purple box that Dr. Balakrishnan identifies as the data transmitting receiving unit, that includes a WiFi circuit; right?

A. I see that it says WiFi here.

Q. Do you disagree that it has a WiFi circuit?

A. I do not.

Q. Does the data -- does the data transmitting and receiving unit in this purple box include a Bluetooth circuit?

A. I see part of this diagram is labeled BT.

Q. You understand that to mean Bluetooth?

A. I would have to confirm, but I think it may.

Q. Okay.

So it's your understanding that the data transmitting/receiving unit here includes a Bluetooth circuit to operate Bluetooth functionality; correct?

A. I don't dispute that.

Tr. (Bederson) at 1250:20-1251:12. As an initial matter, Dr. Bederson provided no analysis on the operation of the Qualcomm chipset at issue; in fact, he appeared to simply be reading from the demonstrative. Maxell argues this testimony of Dr. Bederson demonstrates that the S25 block diagram shows both a Wi-Fi circuit and a Bluetooth circuit, but Dr. Bederson confirmed, at best, that the block diagram includes a block labeled [redacted] and implements both Wi-Fi and Bluetooth functionality. *See* CIB at 124; CRB at 76, 77-78, 80

According to Maxell, Samsung engineer testimony confirms that the S25 includes separate Bluetooth and Wi-Fi radio modems. CIB at 124 (citing JX-0021C, JX-0022C). As with Dr. Bederson's testimony, that of the Samsung engineers is equivocal at best. For instance, Samsung engineer Mr. Chan-Woong Park testified:

Q. And can you read what is written inside the box?

[redacted]

A. [redacted].

Q. And what is your understanding of what this box is?

A. This is showing [redacted]

Q. Does this Bluetooth chip communicate with the application processor?

A. This diagram is showing just the settings.

So there will only be communications when and if there's actual Bluetooth operations. So one cannot know, just by looking at this diagram.

Q. Would you know, based on your experience working on Bluetooth File Share technology [redacted]r?

A. Yes. Actually, when it is conducted, file share operations, it works like this.

. . .

Q. On the S22, S23, and S24, is it correct to say that the [redacted]?

A. When the [redacted]

JX-0021C at 59:21-62:13. Maxell argues that this testimony confirms [redacted], but when asked initially to identify the component he stated that it was a [redacted] *See* CIB at 124. There is no dispute that the Wi-Fi and Bluetooth operations are both conducted on the [redacted], but Mr. Park's testimony does not support [redacted]. Maxell additionally cites the testimony of Samsung engineer Ms. Eunha Choi that [redacted] CIB at 124 (citing JX-0022C.030-.031 at 33:19-34:6). This has nothing to do with Bluetooth, though, nor is it inconsistent with Bluetooth and Wi-Fi sharing a modem.

[redacted]

Maxell additionally argues that S22 and S25 FCC Test Reports and product testing demonstrate that the S22 and S25 include separate Bluetooth and Wi-Fi modems (*see* CIB at 123-124), but this evidence shows, at most, that Bluetooth and Wi-Fi operate in slightly different frequency bands (*see* CX-0190 and CX-0212), and use different modulation schemes (*see id.* and CX-0325). As for Dr. Goldberg's testing, this merely confirms that both Bluetooth and W-Fi are implemented on the S22 and S25, not that they are implemented through distinct radio modems. *See* CX-0849; CX-0850; CX-0851; CX-0852.

Beyond the evidence, Maxell implies that two distinct radio modems are not required, because the 241 patent specification discloses "that multiple modems can be 'appropriately combined with each other' to confirm that a single chipset having combined Bluetooth and Wi-Fi circuits meets the claim language." CIB at 126-127 (citing 241 patent at 13:51-56). The claim, however, unequivocally requires four separate radio modems. Maxell also disparages Dr. Buehrer's non-infringement testimony as inconsistent with his testimony on invalidity, rendering him an unreliable witness. *See* CIB at 127-128. As Dr. Buehrer explained, however, advances in technology have allowed for more sophisticated chipsets [redacted]:

> A. [T]here was a time in the -- specifically in the prior art, when a user selected a protocol, that protocol selection would go down to the CPU, and then the CPU would select a specific radio. So there was a strong connection between the user selection and the radio.
>
> For example, when a user selected Bluetooth, it would use ultimately a Bluetooth -- the Bluetooth radio.
>
> Same with WiFi. When a user selected WiFi, there often was only a single WiFi radio, and it would select that radio.
>
> That's just not true in today's phones.

See Hr'g Tr. (Buehrer) at 1088:17-1090:21.

[redacted]

Maxell further contends that the ability to transmit Bluetooth over the Wi-Fi antenna is "an optional feature of a Bluetooth standard that has been deprecated." CIB at 127 (citing Hr'g Tr. (Buehrer) at 1125:18-1127:1). Yet Maxell also argues that MIPI alliance requirements demand that the architecture across different chipset specifications have "very similar functionality and structure." CIB at 125 (quoting Hr'g Tr. (Goldberg) at 188:18-189:24). As shown above, these chipset specifications for the accused products each [redacted] *See* CX-0035C; CX-0044C; CX-0045C. Even if Maxell is correct that MIPI alliance requirements confirm identical architecture for the chipsets, Maxell must still show that there are separate Bluetooth and Wi-Fi modems in the Qualcomm chipsets.

In rebuttal, Maxell argues that Dr. Goldberg's testing "confirmed the use of distinct Bluetooth and Wi-Fi circuits for Bluetooth File Share and Quick Share, because when Bluetooth File Share is used to transmit video, Bluetooth circuit is turned on and Wi-Fi remains off (CDX-5C.95, .96, .100) and when Quick Share is used to transmit a video the Wi-Fi data usage counter increases confirming that the separate Wi-Fi circuit was used to transmit the video." CRB at 81. This misses the point, though, because the issue here is about hardware, not software. Maxell relies on an inference that, because the user is presented with the labels "Bluetooth" and "Wi-Fi," and "Bluetooth" is enabled while Wi-Fi is not, this must mean that there is a correlation with the actual hardware components. Similarly, Maxell argues that evidence as to Wi-Fi data usage increasing while using Wi-Fi demonstrates the presence of a Wi-Fi modem. *See id.* at 81-82 (citing CX-0852 "S25 and S25 – QSC.mp4"). But none of this evidence shows that there are separate modems for Bluetooth and Wi-Fi, especially given all the evidence of record demonstrating that Bluetooth and Wi-Fi can indeed share the same hardware.

[redacted]

In sum, Maxell has not shown that the Galaxy S22 or S25 practice elements [2a] and [2b]. Elements [2c] and [2d] require the claimed third and fourth radio modems recited in limitations [2a] and [2b], and therefore Maxell has likewise not shown that the Galaxy S22 or the S25 practice elements [2c] and [2d]. Accordingly, Maxell has not shown infringement of claim 2 of the 953 patent by the representative accused products.

3. Claim 9 of the 953 patent

For reference, claim 9 of the 953 patent requires:

> 9. [9pre] The information processing apparatus of claim 1,
>
> [9a] wherein the first radio modem or the second radio modem receives picture information and control information, and
>
> [9b] wherein, during reproduction of the received picture information, the processor reads the control information to determine whether reproduction of the received picture information is allowed and reproduces the received picture information for display upon determining that reproduction is allowed.

953 patent at cl. 9 (annotated).

The preamble of claim 9 recites "[t]he information processing apparatus of claim 1." As explained above, Maxell has shown that the representative accused products infringe claim 1 of the 953 patent. As for limitations [9a] and [9b], Maxell demonstrated that the first radio modem or the second radio modem receives picture information and control information in both the Galaxy S22 or the S25. *See* Hr'g Tr. (Goldberg) at 280:22-282:14. Specifically, the "Private Share" functionality, included in both the S22 and the S25, [redacted] *See id.*; JX-0019C at 64:1-14, 33:1-18, 65:20-66:13, 79:14-19, 74:13-75:8; JX-0022C.033-.034 at 44:10-45:14; CX-0209; CX-0210; CX-0852. Samsung does not dispute that the Galaxy S22 and the S25 meet the additional limitations

[redacted]

of claim 9, although it does dispute a similar functionality in the DI Products, which is addressed below. *See* RIB at 111-22, 130-31.

Accordingly, Maxell has shown that the S22 and the S25 practice claim 9 of the 953 patent. Maxell has thus shown infringement of claim 9 of the 953 patent by the representative accused products.

4. Claim 30 of the 953 patent

For reference, claim 30 of the 953 patent requires:

1. [30pre] An information processing apparatus, comprising:

[30a] an image sensing device having an optical system;

[30b] a first memory capable of storing picture information obtained by the image sensing device;

[30c] a second memory storing an operating system of the information processing apparatus;

[30d] a processor;

[30e] a display capable of displaying the stored picture information;

[30f] a first radio modem, wherein the first radio modem implements a first transmission scheme to transmit or receive the picture information,

[30g] a second radio modem, wherein the second radio modem implements a second transmission scheme and connects to an internet or a local area network to transmit and receive information which is different from the picture information;

[30h] a third radio modem capable of transmitting information from the information processing apparatus; and

[30i] a fourth radio modem capable of transmitting information from the information processing apparatus,

[30j] wherein the processor controls the first radio modem and the second radio modem based on a user instruction, such that the first radio modem transmits the picture information to an external device while the second radio modem is connected to the internet or the local area network for transmitting and receiving the information which is different from the picture information,

[30k] wherein the second radio modem receives a signal from the Internet indicating that an update for the operating system is available, and the processor executes an update process based on the signal, updates the operating system, and stores an updated operating system on the second memory,

[30l] wherein the first radio modem or the second radio modem receives picture information and control information, and, during reproduction of the received picture information, the processor reads the control information to determine whether reproduction of the received picture information is allowed and reproduces the received picture information for display upon determining that reproduction is allowed.

953 patent at cl. 30 (annotated).

a. Elements [30pre] – [30b]

Dr. Goldberg testified that the Galaxy S22 and S25 is a smartphone, which satisfies the information processing apparatus requirement of the preamble. *See* Hr'g Tr. (Goldberg) at 198:19-199:16, 284:17-285:2. He further testified that each includes multiple cameras, as well as associated imaging circuits, that meet limitation [30a], which recites "image sensing device having an optical system." *Id*. at 224:20-229:2, 284:17-285:2; CX-0860C; CX-0849; CX-0852. According to Dr. Goldberg, Samsung's discovery responses confirm that each of the Galaxy S22 and S25 include flash storage and RAM memory that is capable of storing picture information obtained by the image sensing device, as recited in claim element [30b]. *See* Hr'g Tr. (Goldberg) at 225:9-18, 285:3-12; CX-860C, CX-0030C, and CX-0211C. Samsung does not expressly contest claim elements [30pre], [30a], or [30b]. *See* RIB at 111-122.

b. Element [30c]

Limitation [30c] is in dispute, however. That limitation recites: "a second memory storing an operating system of the information processing apparatus." Samsung contends that Maxell failed to demonstrate the existence of a second memory because Dr. Goldberg "simply cross-referenced the evidence he discussed for limitation 1[b] and '241 patent limitation 1[f], both of which recite only a single memory." *See* RIB at 121 (citing Hr'g Tr. (Goldberg) at 284:17-285:12).

[redacted]

In fact Dr. Goldberg testified that each of the Galaxy S22 and S25 include two different types of memory, as confirmed by Samsung's discovery responses. *See* Hr'g Tr. (Goldberg) at 284:17-285:12; CX-0860C, Appendix 1 at 14, 16. Dr. Goldberg further testified that his testing supported the presence of a second memory storing an operating system, and he testified that the storage page includes an images folder, as shown in screenshots:

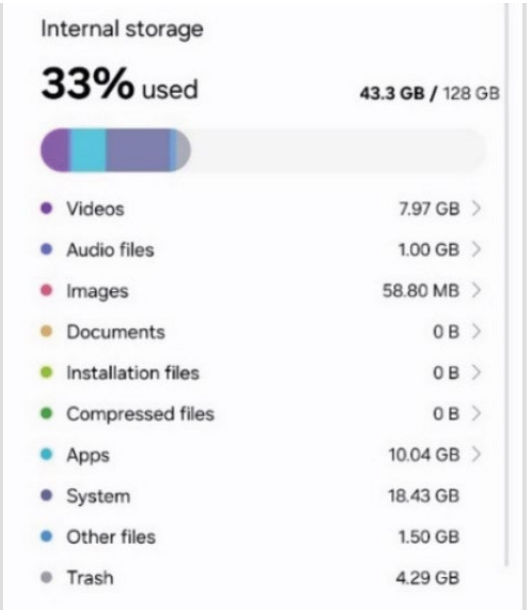

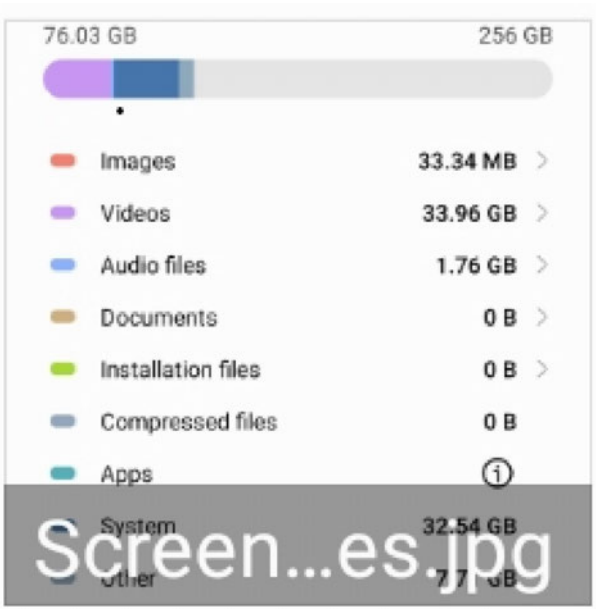

CX-0852 (S25) CX-0849 (S22)

See Hr'g Tr. (Goldberg) at 225:19-226:6, 285:11-12; CX-0852; CX-0849. Thus, the S22 and S25 each include a second memory storing an operating system of the information processing apparatus, and therefore meet limitation [30c].

c. Elements [30d] – [30e]

Dr. Goldberg testified that the Galaxy S22 and S25 each include a processor, which satisfies limitation [30d]. *See* Hr'g Tr. (Goldberg) at 230:12-238:1, 286:3-9. He further testified that each includes a display capable of displaying the stored picture information that meets limitation [30e]. *See id*. at 198:22-199:7, 286:10-14; CX-0860C; CX-0849; CX-0852. Samsung does not expressly contest claim elements [30d] or [30e]. *See* RIB at 111-122.

[redacted]

d. Elements [30f]-[30i]

Limitations [30f]-[30i] require first, second, third, and fourth radio modems. As discussed above, Maxell has failed to show that there are separate Wi-Fi and Bluetooth radio modems. So Maxell has not demonstrated that the S22 or the S25 meet limitations [30f]-[30i].

e. Element [30j]

Limitations [30j] recites: "wherein the processor controls the first radio modem and the second radio modem based on a user instruction, such that the first radio modem transmits the picture information to an external device while the second radio modem is connected to the internet or the local area network for transmitting and receiving the information which is different from the picture information." 953 patent at cl. 30. This is similar to limitation [1f], and as Dr. Goldberg testified, the application processor CPU executes the code that instructs the Qualcomm chipset to engage in transmitting the picture information, whether by Bluetooth or Wi-Fi, and to send and receive internet data via the cellular modem. *See* Tr. (Goldberg) at 231:7-234:4, 277:6-11. Mr. Park confirmed that [redacted] JX-0021C at 42:10-16; *see also id.* at 79:6-80:2. Ms. Choi similarly confirmed that [redacted] JX-0022C.037 at 60:13-21. Whether the first radio modem includes a single radio or multiple radios does not affect the analysis because the CPU still controls the first radio modem such that it transmits the picture information to an external device. *See* Hr'g Tr. Goldberg) at 202:1-24. And as explained above for claim 1, the processor functions "based on a user instruction." Samsung objects to this finding essentially on the same grounds as with limitation [1f], and those grounds have all been rejected, as explained above. *See* RIB at 111-121. Maxell has thus demonstrated that the S22 or the S25 meet limitation [30j].

f. Elements [30k] – [30l]

[redacted]

Dr. Goldberg testified that the Galaxy S22 and S25 each include a cellular radio modem that receives a signal from the Internet indicating that an update for the operating system is available, and the processor executes an update process based on the signal, updates the operating system, and stores an updated operating system on the second memory, which satisfies limitation [30k]. *See* Hr'g Tr. (Goldberg) at 265:21-267:4, 287:7-11. Samsung engineer Mr. Park confirmed that the S22 and S25 can receive a notification about operating system updates via a cellular connection, i.e., a second radio circuit or modem. *See* JX-0021C at 38:15-39:3, 47:1-11. Samsung documentation likewise confirms that, when an update for an operating system is available, each of the S22 and S25 execute an update process and store the updated operating system in the video processing apparatus after execution of the update process. *See* CX-0033C.151-154. As for limitation [30l], and like claim 9, Dr. Goldberg testified that the Galaxy S22 and S25 each implement "Private Share," where the processor reads the control information to determine whether reproduction of the received picture information is allowed and reproduces the received picture information for display upon determining that reproduction is allowed. *See* Hr'g Tr. (Goldberg) at 280:22-282:14, 287:12-14. Samsung does not expressly contest claim elements [30k] or [30l]. *See* RIB at 111-122.

The evidence accordingly shows that the S22 and S25 each meet limitations [30k] and [30l]. Because of the failure to prove limitations [30f]-[30i], however, Maxell has not shown infringement of claim 30 of the 953 patent.

5. Claim 1 of the 241 patent

For reference, claim 1 of the 241 patent requires:

1. [1pre] A video processing apparatus, comprising:

[1a] a first radio communication circuit implementing a first transmission scheme having a first modulation scheme and a first transmission frequency band, the first

[redacted]

radio communication circuit capable of transmitting video information by radio or receiving information by radio using the first transmission frequency band;

[1b] a second radio communication circuit implementing a second transmission scheme having a second modulation scheme different from the first modulation scheme and a second transmission frequency band different from the first transmission frequency band, the second radio communication circuit capable of connecting by radio to an internet or a home network to transmit and receive information using the second transmission frequency band;

[1c] a third radio communication circuit capable of transmitting information and using a third transmission frequency band;

[1d] an imaging circuit capable of receiving video information and still picture information via an optical system;

[1e] a compression circuit compressing the still picture information using a first type of compression method and the video information using a second type of compression method;

[1f] an accumulation circuit capable of accumulating video information received by the imaging circuit; and

[1g] a controller controlling assignment of connection of each of the first, second, and third radio communication circuits,

[1h] wherein the first radio communication circuit can transmit video information accumulated in the accumulation circuit to an external device by radio,

[1i] wherein when an indication from a user indicates to transmit video information using the first radio communication circuit, the controller assigns a connection to the first radio communication circuit for transmitting the video,

[1j] wherein the controller controls each of the first and second radio communication circuit so that the first radio communication circuit transmits video information while the second radio communication circuit connects to the internet or the home network, and

[1k] wherein one of the first, second, or third radio communication circuits receives a signal from the internet indicating that an update for an operating system of the video processing apparatus is available, and the video processing apparatus executes an update process such that an updated operating system of the video processing apparatus is stored in the video processing apparatus after execution of the update process.

241 patent at cl. 1 (annotated).

[redacted]

a. Element [1pre]

Dr. Goldberg testified that the Galaxy S22 and S25 are smartphones, which satisfies the video processing apparatus requirement of the preamble. *See* Hr'g Tr. (Goldberg) at 198:19-199:16. Samsung does not expressly contest claim element [1pre]. *See* RIB at 111-122.

b. Element [1a]

As for elements [1a] and [1b], and as explained above, Maxell has shown that the S22 and S25 possess a cellular circuit and either a Wi-Fi or Bluetooth radio circuit, which Maxell maps to the second and first radio communication circuits, respectively:

Infringing Mode	First radio [1.a] [28.a] [30.f]	Second radio [1.b], [28.b], [30.g]	Third radio [1.c], [28.c], [30.h]	Fourth Radio [5], [30.i]	While limitation [1.j], [28.j], [30.j]
Mode 1 (S22 and S25)	Wi-Fi circuit transmitting video via Quick Share	Cellular circuit connecting to Internet via LTE/5G	NFC circuit transmitting via Samsung Pay	Bluetooth circuit transmitting via BT File Share	Quick Share while connecting to Internet via cellular
Mode 2 (S25 only)	BT circuit transmitting video via BT File Share	Same as Mode 1	NFC circuit transmitting via Samsung Pay	Wi-Fi circuit transmitting video via Quick Share	BT File Share while connecting to the Internet via cellular
Mode 3 (S22 and S25)	Wi-Fi circuit transmitting video via Quick Share	Same as Mode 1	BT circuit transmitting via BT File Share	NFC circuit transmitting via Samsung Pay	Quick Share while connecting to Internet via cellular
Mode 4 (S25 only)	BT circuit transmitting video via BT File Share	Same as Mode 1	Wi-Fi circuit transmitting via Quick Share	NFC circuit transmitting via Samsung Pay	BT File Share while connecting to the Internet via cellular

CIB at 121. For element [1c], addressed further below, Maxell identifies either NFC, Bluetooth, or Wi-Fi. *See id*. All four transmission schemes use different modulation schemes and frequency bands. *See* Hr'g Tr. (Goldberg) at 204:17-207:5. Both Bluetooth and Wi-Fi can transmit video, and it is undisputed that cellular communications connect to the internet. *See id*. at 207:6-210:3; RIB at 111-16.

Samsung contends that Maxell has not shown separate Bluetooth and Wi-Fi radio communication circuits, and presents this as a dispute over limitation [1a]. *See* RIB at 111-116. In Maxell's infringing modes 3 and 4 the first and third radio communication circuits are a combination of Wi-Fi and Bluetooth, and as explained above, Maxell has not shown that Wi-Fi and Bluetooth, as implemented on the S22 and S25, have different radio communication circuits.

[redacted]

Maxell's infringing modes 1 and 2, however, do not require both Wi-Fi and Bluetooth according to Maxell's mapping. Therefore, regardless of whether or not Maxell has shown separate Wi-Fi and Bluetooth radio communication circuits, Maxell has shown that each of the S22 and S25 include a first radio communication circuit implementing a first transmission scheme having a first modulation scheme and a first transmission frequency band, the first radio communication circuit capable of transmitting video information by radio or receiving information by radio using the first transmission frequency band according to infringing mode 1, and solely for the S25 as to infringing mode 2.

Maxell has thus shown that the S22 and S25 meet claim element [1a].

c. Elements [1b] – [1f]

The Galaxy S22 and S25 each include a cellular circuit that uses LTE and 5G connections to implement a second modulation scheme and second transmission frequency bands to connect to the Internet and transmit and receive information when connected to the internet, which satisfies limitation [1b], and an NFC circuit that uses a third transmission frequency band (13.56 MHz) with ASK modulation to transmit information, such as information to an NFC reader for making mobile payments via the Samsung Pay/Wallet application, which satisfies limitation [1c]. *See* Hr'g Tr. (Goldberg) at 199:17-201:22, 210:25-211:14, 215:2-3. Dr. Goldberg testified that each of the S22 and S25 includes multiple cameras, as well as associated imaging circuits, that meet limitation [1d]. *See* Hr'g Tr. (Goldberg) at 224:20-226:6. He also testified that each includes a compression circuit where the image data received by the cameras is processed using two different compression methods (JPEG and MP4), satisfying limitation [1e], and memory where the compressed image data is stored, or accumulated, satisfying limitation [1f]. *See id.*; *see also* JX-0021C at 81:10-22; CX-0030C; CX-0211C; CX-0860C; CX-0033C.63-86; CX-0213.56-66; CX-

[redacted]

0332; CX-0849; CX-0852. Samsung does not expressly contest claim elements [1b], [1c], [1d], [1e], or [1f].[3] *See* RIB at 111-122.

The evidence thus supports that the S22 and S25 each meet limitations [1b]-[1f].

d. Element [1g]

Limitation [1g] is in dispute. That limitation recites: "a controller controlling assignment of connection of each of the first, second, and third radio communication circuits." As Dr. Goldberg explained, the S25 and S22 each include an application processor within their chipsets [redacted] that executes the operating system and various applications to interface with the claimed radio communication circuits, [redacted] to control assignment of connections to each of the first (Bluetooth or Wi-Fi), second (cellular), and third (NFC) radio communication circuits. *See* Hr'g Tr. (Goldberg) at 230:12-238:1; CX-0030C; CX-0211C; JX-0021C at 42:10-14, 79:6-80:2; JX-0022C.037 at 60:13-21. Samsung contends that Maxell failed to demonstrate that the application processors control the assignment of specific radio circuits. *See* RIB at 116-117 (citing Hr'g Tr. (Buehrer) at 1096:6-20). Dr. Buehrer's testimony, though, is both conclusory and inconsistent with the written record, because the functional block diagrams show that the processors can control assignment of the various radio communication circuits. *See* Hr'g Tr. (Buehrer) at 1096:6-20; CX-0030C; CX-0211C.

The evidence therefore shows that the S22 and S25 each meet limitation [1g].

e. Element [1h]

[3] Samsung's annotated element [1f] of claim 1 seemingly combines claim elements [1f] and [1g], but Samsung does not dispute that the S22 or S25 include an accumulation circuit capable of accumulating video information received by the imaging circuit. *See* RIB at 116-117.

The first radio communication circuit in the Galaxy S22 and S25 can transmit stored (i.e., accumulated) video to another smartphone or laptop (i.e., external device) using either Wi-Fi (infringing mode 1) or Bluetooth (infringing mode 2). *See* Hr'g Tr. (Goldberg) at 239:2-25; CX-0852C. Samsung does not expressly contest this functionality in the representative accused products. *See* RIB at 111-122.

f. Element [1i]

Samsung does, however, dispute that Maxell has demonstrated that the S22 and S25 meet limitation [1i]. *See* RIB at 118-21. That limitation recites: "wherein when an indication from a user indicates to transmit video information using the first radio communication circuit, the controller assigns a connection to the first radio communication circuit for transmitting the video."

For infringing mode 1, involving Wi-Fi as the first transmission scheme, the application processor assigns Wi-Fi after the user selects "Wi-Fi Only," followed by "Quick Share Link Share," and then a QR code, in both the S22 and the S25. *See* Hr'g Tr. (Goldberg) at 256:20-258:1. The video then begins to upload immediately, without further user action. *See id*. For infringing mode 2, involving Bluetooth, the application processor assigns Bluetooth after the user selects Bluetooth and the receiving device, at least when the sending device is the S25 and the receiving device is a laptop. *See id*. at 243:8-244:14. The video then commences without further user action. *See id*. So both infringing modes satisfy the claim limitation.

Samsung argues that Dr. Goldberg applied the wrong claim construction because he added the phrase "can be used" when the correct construction requires the radio communication circuit to necessarily be used to transmit video. *See* RIB at 118-119 (citing Hr'g Tr. (Buehrer) at 1088:1-6). But Dr. Goldberg confirmed that his testimony applied under both parties' constructions, and in any event Bluetooth or Wi-Fi, as applicable, necessarily are used when selected. *See* Hr'g Tr. (Goldberg) at 348:10-350:1. Samsung further argues that there may be multiple Wi-Fi radios, and

that the user must indicate "use Wi-Fi only" and also make another indication to transmit video. *See* RIB at 119-120. The claim is satisfied, however, if a "first" radio communication circuit uses a particular transmission scheme, modulation scheme, and frequency band, so any Wi-Fi radio circuit will do, and nothing limits the nature of the user indication, so multiple icon selections on a touch screen satisfy the "indication" requirement, even if selection of a particular Wi-Fi frequency band is required. Samsung also contends that Maxell has not shown a "discrete Bluetooth radio circuit," which is true, as explained above for the 953 patent. RRB at 81-83. But claim 1 of the 241 merely requires, in relevant part, a "first" radio communication circuit, which only has to be different from the second and third circuits, and which may be satisfied even by hardware shared by Bluetooth and Wi-Fi.

The evidence accordingly shows that the S22 and S25 each meet limitation [1i].

g. Elements [1j] and [1k]

Dr. Goldberg testified that that the S22 and S25 each include a controller "wherein the controller controls each of the first and second radio communication circuit so that the first radio communication circuit transmits video information while the second radio communication circuit connects to the internet or the home network," as recited in limitation [1j]. *See* Hr'g Tr. (Goldberg) at 262:6-265:10. Dr. Goldberg's testing demonstrated that the first radio communication circuit (Bluetooth or Wi-Fi) and second radio communication circuit (cellular) are able to perform operations simultaneously. *See* Hr'g Tr. (Goldberg) 262:6-265:10; CX-0849-CX-0852. He also explained that the S22 and S25 can receive a signal from the internet via Wi-Fi or cellular circuit indicating that an update for an operating system is available, and execute an update process and store the updated operating system in the video processing apparatus after execution of the update process, as recited in limitation [1k]. *See* Hr'g Tr. (Goldberg) 265:21-267:4; CX-0033C.151-154;

[redacted]

CX-0213.160; CX-0217; CX-0204; CX-0205; CX-0849; CX-0852; *see also* JX-0021C at 38:15-39:3, 47:1-11.

Samsung does not expressly contest claim elements [1j] or [1k], and the evidence shows they are met. *See* RIB at 111-122. Thus, both the S22 and S25 meet all the limitations of claim 1 in infringing mode 1, and the S25 meets them in infringing mode 2.

6. Claim 5 of the 241 patent

For reference, claim 5 of the 241 patent requires:

> 5. [5pre] The video processing apparatus of claim 1,
>
> [5a] further comprising a fourth radio communication circuit capable of transmitting information and using a fourth transmission frequency band that is different from the first, second, and third transmission frequency bands,
>
> [5b] wherein the controller controls assignment of connection of each of the first, second, third, and fourth radio communication circuits.

241 patent at cl. 5 (annotated). As for limitation [5a], Maxell relies on separate radio communication circuits for the Wi-Fi and Bluetooth. *See* CIB at 143-144. As explained above, however, Maxell has not demonstrated that the S22 or the S25 include separate radios for Wi-Fi and Bluetooth, and so necessarily limitation [5b] is not met, either. Accordingly, Maxell has not shown that the S22 and the S25 practice claim 5 of the 241 patent.

7. Claim 7 of the 241 patent

For reference, claim 7 of the 241 patent requires:

> 7. [7pre] The video processing apparatus of claim 1,
>
> [7a] wherein transmitting of the information by the third radio communication circuit comprises transmitting video information to the external device.

241 patent at cl. 7 (annotated). As for limitation [7a], Maxell argues that the S22 and S25 meet this claim limitation in infringing mode 3 and infringing mode 4 because, in those modes, the third radio communication circuit transmits video information to the external device. *See* CIB at 144.

As explained above, however, Maxell has not demonstrated that the S22 or the S25 include separate radio communication circuits for Wi-Fi and Bluetooth, which are the third radio communication circuits in modes 3 and 4. Therefore, Maxell has not shown that the S22 or S25 meet the additional requirements of limitation [7a]. Accordingly, Maxell has not shown that the S22 and the S25 practice claim 7 of the 241 patent.

8. Claim 15 of the 241 patent

For reference, claim 15 of the 241 patent requires:

> 15. [15pre] The video processing apparatus of claim 1,
>
> [15a] wherein the second and third radio communication circuits conduct demodulation through Orthogonal Frequency Division Multiplexing (OFDM).

241 patent at cl. 15 (annotated). The preamble of claim 15 recites "[t]he video processing apparatus of claim 1." As explained above, Maxell has shown that the representative accused products infringe claim 1 of the 241 patent. As for limitation [15a], Maxell argues that the S22 and S25 meet this claim limitation in infringing mode 4 because, in that mode, the second radio communication circuit is a cellular circuit, the third radio communication circuit is a Wi-Fi circuit, and both use OFDM. *See* CIB at 144 (citing Hr'g Tr. (Goldberg) at 270:11-271:3). As explained above, however, Maxell has not demonstrated that the S22 or the S25 includes separate radio communication circuits for Wi-Fi and Bluetooth. Moreover, Maxell does not accuse the S22 according to infringing mode 4. *See* CIB at 121. So even had Maxell shown separate radio communication circuits for Wi-Fi and Bluetooth, it still would not have shown that the S22 infringes claim 15 of the 241 patent. Therefore, Maxell has not shown that the S22 or the S25 meets the additional requirements of limitation [15a]. Accordingly, Maxell has not shown that the S22 and the S25 infringe claim 15 of the 241 patent.

9. Claim 28 of the 241 patent

The limitations of claim 28 are largely the same as those of claim 1, and are present in the S22 and S25 for the same reasons as claim 1, except that claim 1 recites an "imaging circuit," "compression circuit," "accumulation circuit," and "controller," while claim 28 recites four means-plus-function elements, including a "means for receiving video information," "means for compressing," and "means for accumulating." Limitations drafted in means-plus-function format are construed to cover the corresponding structure described in the specification and equivalents thereof. *See Williamson,* 792 F.3d at 1347. Equivalence in the Section 112(6) context is similar to, but narrower than, equivalence in the doctrine of equivalents context; the function must be identical but the way and result may be insubstantially different. *See Genuine Enabling Tech. LLC v. Sony Group Corp.*, 167 F.4th 1196, 1202-03 (Fed. Cir. 2026) (citing *Odetics, Inc. v. Storage Technology Corp*., 185 F.3d 1259, 1267 (Fed. Cir. 1999)).

Maxell makes almost no effort to show the "means for compressing" in the S22 and S25, which it identifies as a "CPU executing software," is equivalent to the means for compressing disclosed in the patent. *See* CIB at 129-30. The parties agreed that the corresponding structure disclosed in the patent is either "compression circuit 111" or "software," operating presumably on a general purpose computer. CIB at xvii (citing 241 patent at 3:55-67, 20:30-38). The parties also agreed that the function of the "means for compressing" is compressing both still pictures and videos, which is reasonable and is adopted, because compression circuit 111 clearly carries out both functions. *See* 241 patent at 3:61-4:4. But Maxell does not attempt to show that the CPUs in the S22 and S25 are structurally equivalent to compression circuit 111, or that one CPU executing software (even assuming the disclosure of JPEG and MP4 protocols is adequate to specify the algorithms) performs both claimed functions. *See* CIB at 129-30. Nor did Dr. Goldberg, who testified simply that there are "imaging circuits that have compression" in the S25. Hr'g Tr.

(Goldberg) at 225:19-226:6; *see* CDX-005C.70. So even though Samsung does not dispute its presence, the "means for compressing the still picture information using a first type of compression method and the video information using a second type of compression method" has not been shown in either representative accused product.

As noted, Maxell and Samsung disputed the construction of the remaining element of claim 28, the "means for controlling," which has been construed to be a combination of a controller and a transmission rate assignment control circuit, together performing three claimed functions. Because both sides' constructions were rejected, Maxell has unsurprisingly not carried its burden of showing that the structure it maps to this element, the application processor, is the same as or equivalent to a controller/TRA circuit combination. *See* CIB at 130-33.

Even if it had been on notice of the proper construction, however, it still would not have met its burden, because it does not employ the proper legal analysis. *See id*. Maxell maps the means for controlling to the application processor in each respective chipset. *See id*. As explained above in connection with claim elements [1g], [1i], and [1j], the evidence shows that the identified application processors perform the three claimed functions of controlling assignment of connection of the first, second, and third radio communication circuits, of assigning a connection to the first radio communication circuit for transmitting video when a user so indicates, and of controlling the first and second radio communication circuits so that the first radio communication circuit transmits video while the second radio communication circuit connects to the internet. But an application processor is not a controller, even if it performs the same functions, and Maxell does not even cite to the "equivalency" test in the Section 112(6) context. *See id*. at 130-143. Nor did Dr. Goldberg. *See* Hr'g Tr. (Goldberg) at 229:3-265:15. This is particularly problematic for the "way" aspect of the test, because even assuming (reasonably) that the same result is achieved by

using an application processor instead of a traditional controller to perform the functions, an application processor, which is essentially a programmable general purpose computer, does not necessarily operate the same as, or insubstantially different from, a controller, which is a special purpose device. So although Samsung's dispute over the "means for controlling" element does not focus on Section 112(6), Samsung is correct that Maxell has not carried its burden of proving that this element is satisfied in either representative accused product.

In short, Maxell has not proven the presence of the "means for compressing" or "means for controlling" in either representative accused product. Accordingly, Maxell has not shown that the S22 and the S25 infringe claim 28 of the 241 patent.

D. Domestic Industry – Technical Prong

1. Similarity of the 241 and 953 Products

Dr. Goldberg testified that 22 Motorola smartphones have either three or four radio communication circuits; the ones with only three lack NFC. *See* Hr'g Tr. (Goldberg) at 182:25-183:10. How this affects the claims requiring four such circuits is not explained, but Samsung makes no issue of it, and as discussed below Maxell has not carried its burden for other reasons. *See* RIB at 123-26. Otherwise, Dr. Goldberg reviewed source code, developer and Android documents, Android requirement specifications, Qualcomm and Mediatek chipset specifications, FCC test reports, and user guides supplied by the manufacturers, and he oversaw testing of the DI Products. *See id*. at 185:7-186:3. The DI Products he tested were the Motorola Edge+ 2023 (CPX-0009), Moto G 5G (2024) (CPX-0011 and CPX-0012), and Moto G Power 5G (2024) (CPX-0013 and CPX-0014). *See id*. at 191:12-192:8. He testified at length how the DI Products work in materially the same way, and did not consistently analyze a single "representative" DI Product. *See id*. at 185:7-194:6. Although Samsung nitpicks his opinion, it does not seriously call it into

[redacted]

question, and to the extent specific Samsung complaints are relevant they are addressed below. *See* RIB at 123-26.

2. Claim 1 of the 953 patent

Claim 1 of the 953 patent is presented above in connection with infringement. Samsung's briefing confirms there is no dispute for limitations [1pre]-[1c] and [1e]. *See* RIB at 126-130; RRB at 85-88. In light of the expert testimony and evidence cited, Maxell has shown these limitations are met in the DI Products. *See* CIB at 149-164; Hr'g Tr. (Goldberg) at 214:1-224:4, 226:11-228:19, 276:9-277:3; 277:12-23.

As to limitation [1d], the DI Products include a first radio modem, wherein the first radio modem implements a first transmission scheme to transmit or receive the picture information. As Dr. Goldberg testified, they include Bluetooth and WiFi capabilities for sharing pictures via Bluetooth File Share or Quick Share. *See* Hr'g Tr. (Goldberg) at 277:6-11. The also each include the recited first radio modem, whether that first radio modem is for Wi-Fi or for Bluetooth. *See id.*; CX-0853-0855; CX-0169-170; CX-0188; CX-0270; CX-0276; CX-0284)); CX-0175.

According to Samsung, the DI Products do not include the claimed "first radio modem," because Dr. Goldberg "picked two boxes from the [redacted] chipset and called them distinct radio circuits, even though [redacted]." RIB at 126-127 (citing Hr'g Tr. (Goldberg) at 217:24-218:13). Samsung does not in fact dispute the presence of such a first radio modem; rather, as with infringement it actually contends that Maxell has failed to show separate Bluetooth and Wi-Fi communication circuits. *See id.* at RIB at 126-127. While this indeed affects the infringement analysis for claim 2, for purposes of element [1d], either the Bluetooth radio or the W-Fi radio suffices. So Maxell has shown the practice of element [1d] by the DI Products.

[redacted]

As to element [1f], Dr. Goldberg's testing demonstrated that the first modem (whether Bluetooth or Wi-Fi) and second modem (cellular) are able to perform operations simultaneously by controlling the cellular circuit to download a podcast or send/receive MMS over cellular data while engaging the first radio to transmit video. *See* Hr'g Tr. (Goldberg) at 229:6-239:1; CX-0853-CX-08552. And Dr. Goldberg testified that the DI Products include a Qualcomm or MediaTek chipset that must comply with MIPI Alliance requirements to maintain interoperability as shown in exemplary data sheets. *See* Hr'g Tr. (Goldberg) at 188:13-189:24; CX-0042C-CX-0045C.

Samsung complains that "Dr. Goldberg also did not show how the alleged controllers (i.e., the AP chipsets) in the DI Products control the assignment of specific radio circuits as recited in the claims." RIB at 128. But he explained that "the [redacted] application processor" has a CPU, and "when the applications run within the CPU inside the application processor, the controller, it controls these various radio circuits," including the Bluetooth and Wi-Fi chip [redacted]), as well as the cellular modem:

[redacted]

CX-0046C; Hr'g Tr. (Goldberg) at 238:2-12.

The totality of the evidence thus shows that the DI Products practice limitation [1f]. So Maxell has shown all the elements of claim 1 are present in the DI Products.

3. Claim 2 of the 953 patent

Claim 2 of the 953 patent is presented above in connection with infringement. Maxell again relies on a theory mapping four modems. *See* CIB at 149-164. Maxell's four practicing modes are depicted below.

Practicing Mode	First radio [1.a] [28.a] [30.f]	Second radio [1.b], [28.b], [30.g]	Third radio [1.c], [28.c], [30.h]	Fourth Radio [5], [30.i]	While limitation [1.j], [28.j], [30.j]
Mode 1	Wi-Fi circuit transmitting video via Nearby Share	Cellular circuit connecting to Internet via LTE/5G	NFC circuit transmitting via NFC Pay	Bluetooth circuit transmitting via BT File Share	Nearby Share while connecting to Internet via cellular
Mode 2	BT circuit transmitting video via BT File Share	Same as Mode 1	NFC circuit transmitting via NFC Pay	Wi-Fi circuit transmitting video via Nearby Share	BT File Share while connecting to the Internet via cellular
Mode 3	Wi-Fi circuit transmitting video via Nearby Share	Same as Mode 1	BT circuit transmitting via BT File Share	NFC circuit transmitting via NFC Pay	Nearby Share while connecting to Internet via cellular
Mode 4	BT circuit transmitting video via BT File Share	Same as Mode 1	Wi-Fi circuit transmitting via Nearby Share	NFC circuit transmitting via NFC Pay	BT File Share while connecting to the Internet via cellular

CIB at 151. As with infringement, Maxell has again failed to show distinct modems for Bluetooth and Wi-Fi. Maxell cites back to its arguments regarding infringement in support of its arguments that the DI Products include separate Bluetooth and Wi-Fi circuits. *See id.* at 153-154.

Other than that, which is unpersuasive, Maxell points to no evidence demonstrating any separate hardware circuitry for Bluetooth and Wi-Fi. *See id.* For instance, Maxell cites "QC and MTK chipset specifications." *Id.* (citing CX-0044C; CX-0045C; CX-0046C). None of these cited specifications show separate modems for Bluetooth and Wi-Fi:

CX-0045C. And Maxell again fails to address the fact that the Bluetooth radio in CX-0044C and CX-0045C.

CX-0046C provides even less detail:

[redacted]

CX-0046C. Dr. Goldberg testified that this document shows that the [redacted] has "[redacted]." Hr'g Tr. (Goldberg) at 218:9-13. As can be seen above, this document demonstrates, at most, that the [redacted] includes Bluetooth and Wi-Fi functionality, but does not demonstrate separate modems for Bluetooth and Wi-Fi. As Maxell argues, "the Accused and DI Products have the same architecture because they comply with MIPI alliance interface and have 'very similar functionality and structure.'" CIB at 125 (quoting Hr'g Tr. (Goldberg) at 188:18-189:24). Yet as shown above for the Qualcomm chipset specifications, a separate dedicated Bluetooth radio [redacted] CX-0044C; CX-0045C. Even given Maxell's arguments about the need for these products to comply with MIPI alliance requirements, Maxell has not demonstrated separate Wi-Fi and Bluetooth modems in any of the DI Products.

Maxell has accordingly not shown that the DI Products practice claim 2 of the 953 patent.

4. Claim 9 of the 953 patent

Claim 9 of the 953 patent is presented above in connection with infringement. The DI Products clearly satisfy the preamble ("[t]he information processing apparatus of claim 1"), and as explained above, Maxell has shown that they possess all the elements of claim 1. As for limitations

[redacted]

[9a] and [9b], Maxell's mapping of claim elements changes between its initial posthearing brief and its reply posthearing brief. In its initial brief, it identifies a "[hyper]link associated with [a] picture being sent via link share" as the picture information, but in its reply brief it identifies the picture (more precisely, a video) itself as the picture information. *Compare* CIB at 161 *with* CRB at 95 n.16.

Under either mapping Maxell has not carried its burden. For the hyperlink as the picture information, Dr. Goldberg testified that a "file" is shared via MMS, or text message, which includes the expiration date, where "the processor in the DI products reads that information, and decides whether you can present it or not." Hr'g Tr. (Goldberg) at 282:15-23. In fact the "file" is a hyperlink to a URL:

CDX-0005C.148 (excerpt). In the representative accused products, [redacted]

Hr'g Tr. (Goldberg) at 281:14-18.

Dr. Buehrer testified, without rebuttal from Maxell, at least regarding the functionality on which Maxell relies. When the hyperlink is touched the web browser attempts to access the URL, and if successful a content thumbnail and the expiration date is shown, as seen above. *See* Hr'g Tr. (Buehrer) at 1118:10-1120:7. If unsuccessful, because the hyperlink has expired, a webpage stating that the link has expired is shown. *See id*. determines whether the link has expired, so the claimed processor never "reads the control information to determine whether reproduction of the received picture information is allowed." 953 patent at cl. 9. *See* JX-0022C.033-.034 at 44:10-45:14; Hr'g Tr. (Goldberg) at 282:24-283:2. So as between Dr. Goldberg, who stated that the DI Products read the expiration information, and Dr. Buehrer, who stated that Dr. Buehrer's is more consistent with the record.

For the picture itself as the picture information, Maxell argues simply that "displaying the expiration date and thumbnail simultaneously requires the processor to read both control and picture." CRB at 95 n.16. But as Dr. Buehrer explained, the processor does not need to read the control information because the expiration determination is made by the server, that is, the "website" controls whether the picture information is reproduced. Hr'g Tr. (Buehrer) at 1120:13-24.

Thus, Maxell's mappings both fail because Maxell does not show that the claimed processor "reads the control information to determine whether reproduction of the received picture

[redacted]

information is allowed." Accordingly, Maxell has not shown that the DI Products practice claim 9 of the 953 patent.

5. Claim 30 of the 953 patent

Claim 30 of the 953 patent is presented above in connection with infringement. Samsung's briefing confirms there is no dispute for limitations [30pre]-[30b], [30d]-[30e], [30g], and [30k]. *See* RIB at 126-131; RRB at 85-88. In light of the expert testimony and evidence cited, Maxell has shown these limitations are met in the DI Products. *See* CIB at 161-164; Hr'g Tr. (Goldberg) at 214:1-224:4, 226:11-228:19, 276:9-277:3, 277:12-23, 284:17-287:6.

a. Limitation [30c]

Samsung identifies limitation [30c] as in dispute. *See* RIB at 130. Dr. Goldberg's testing included analysis of the storage manager in the Moto G 5G (2024). *See* Hr'g Tr. (Goldberg) at 228:14-19; CX-0853. The memory appears to be partitioned to store both "videos" and "system" information:

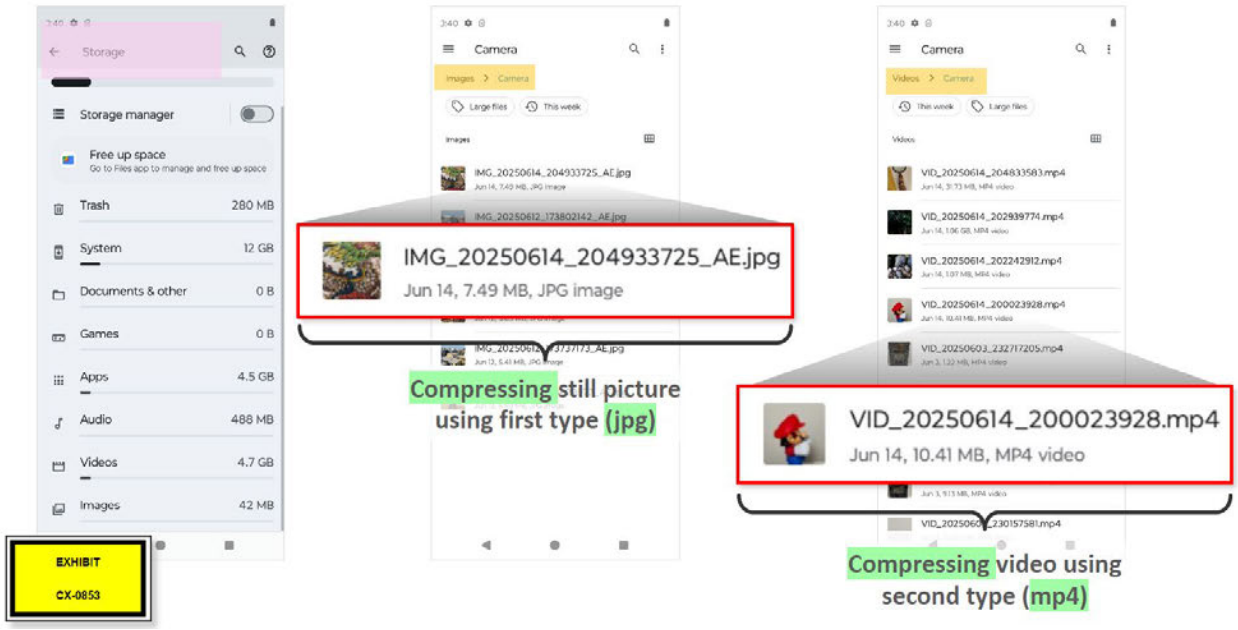

[redacted]

CDX-0005C.0073; *see also* CX-0853-CX-0855. According to Samsung, the DI Products do not include the claimed "second memory storing an operating system of the information processing apparatus," because Dr. Goldberg "simply cross-referenced the evidence he discussed for '953 patent limitation 1[b] and '241 patent limitation 1[f], both of which recite a single memory." RIB at 130 (citing Hr'g Tr. (Goldberg) at 284:17-285:12). As seen above, this is incorrect, because the DI Products each include a second memory storing an operating system of the information processing apparatus, just as the representative accused products do. *See* CX-0852; CX-0849. So the DI Products meet limitation [30c].

b. Limitation [30f], [30h], and [30i]

Limitations [30f]-[30i] require first, second, third, and fourth radio modems. As discussed above with respect to claim 2, Maxell has failed to show that there are separate Wi-Fi and Bluetooth modems. Maxell has thus not demonstrated that the DI Products meet limitations [30f], [30h], and [30i].

c. Limitation [30j]

As explained above for infringement, this limitation only implicates the first and second radio modems, and the DI Products each include a chipset including at least one modem capable of transmitting the picture information to an external device via either Wi-Fi or Bluetooth, and another modem connected to the internet. As Dr. Goldberg explained:

> So Bluetooth File Share, and downloading a podcast over cellular in the upper left, and the screens, which is a bit of an eye chart, show the simultaneous activity of the different functionality.
>
> On the lower one, WiFi, the "while" scenarios -- or actually, Nearby Share and cellular, those scenarios are shown using -- looking at the actual data on the screen.

Hr'g Tr. (Goldberg) at 264:1-7;

[redacted]

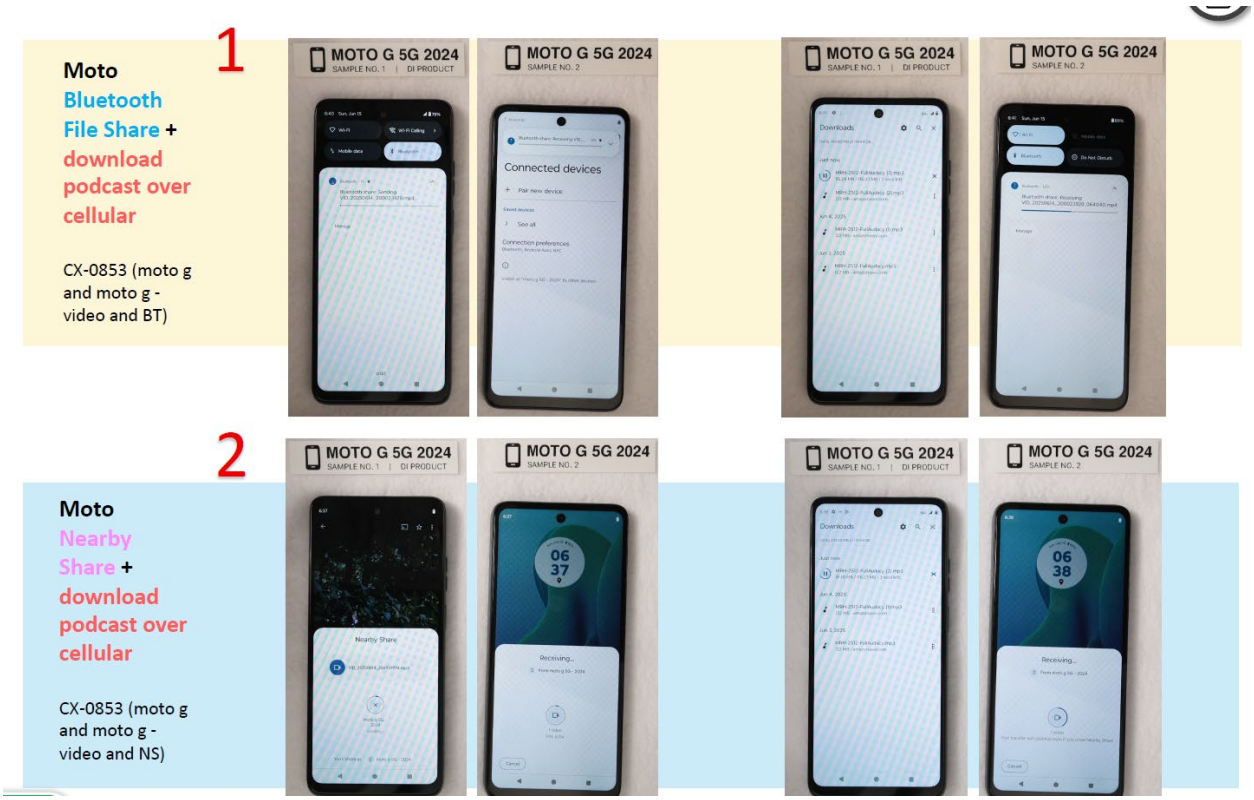

CDX-0005C.118. Samsung alleges that Dr. Goldberg "did not map specific physical radio circuitry in the DI Products to the claim limitations, and for many DI Products did not even identify the correct application processor in each Motorola phone." RIB at 127-128. On balance, though, Maxell's evidence is sufficient, and the evidence supports that the DI Products each meet limitation [30j].

d. Limitation [30l]

Limitations [30l] recites: "wherein the first radio modem or the second radio modem receives picture information and control information, and, during reproduction of the received picture information, the processor reads the control information to determine whether reproduction of the received picture information is allowed and reproduces the received picture information for display upon determining that reproduction is allowed." 953 patent at cl. 30. As explained above for claim 9, Maxell has not demonstrated that the 953 DI Products practice claim 9 of the 953

[redacted]

patent because Maxell has not proffered evidence demonstrating that the processor inside the 953 DI Products determines whether reproduction of the received picture information is allowed. So Maxell has not demonstrated that the DI Products meet limitation[30l].

Overall, Maxell has not proven that the DI Products practice claim 30 of the 953 patent.

6. Claim 1 of the 241 Patent

Claim 1 of the 241 patent is presented above in connection with infringement. Samsung's briefing confirms there is no dispute for limitations [1pre], [1b], [1e]-[1f], [1h], and [1j]-[1k]. *See* RIB at 126-130; RRB at 85-88. In light of the expert testimony and evidence cited, Maxell has shown these limitations are met in the 241 DI Products. *See* CIB at 149-164; Hr'g Tr. (Goldberg) at 214:1-224:4, 226:11-228:19, 276:9-277:3; 277:12-23.

a. Limitations [1a], [1c], and [1d]

As noted, Maxell identifies four practicing modes for the DI Products, and for limitation [1a] these correspond to either Bluetooth or Wi-Fi. *See* CIB at 151. Dr. Goldberg testified that, according to practicing modes 1 and 2, the DI Products include "a first [modem] … using the first transmission frequency band" because they include Bluetooth for performing Bluetooth File Share and Wi-Fi for performing Nearby Share after a user selects "Wi-Fi." *See* Tr. (Goldberg) at 214:1-224:4. Dr. Goldberg's testing further confirmed that, according to practicing modes 1 and 2, the DI Products use the Bluetooth/Wi-Fi circuit to meet the claim requirements. *See id.*; CX-0169-CX-0170, CX-0188; CX-0270; CX-0276; CX-0284; CX-0175. As noted, it is not clear that all DI Products include NFC functionality, but Dr. Goldberg identified "an NFC circuit transmitting via NFC Pay" as the third modem. Hr'g Tr. (Goldberg) at 214:17-215:21. Samsung does not separately challenge the presence of NFC, though, and its other objections to elements [1a] and [1c] are overly nitpicky and otherwise unpersuasive. *See* RIB at 126-27. And although Samsung states that it challenges limitation [1d], which is the image circuit, in fact the DI Products do

possess imaging circuits, as explained above, and Samsung's objection appears to be just a typographical error. *See* RIB at 126. So Maxell has shown that the DI Products meet limitations [1a], [1c], and [1d].

b. Limitation [1g]

As explained above, Maxell has demonstrated that the DI Products meet the "controller" limitation because it does not require particular analysis of the Wi-Fi/Bluetooth chip, and because the application processor CPU, whether Qualcomm or MediaTek, "control[s] assignment of connection of each of the first, second, and third radio communication circuits" according to practicing modes 1 and 2. Dr. Goldberg's testing confirmed that each of the DI Products includes a Qualcomm or MediaTek chipset that controls assignment of connections for Bluetooth File Share, NearbyShare (Wi-Fi), a browser for podcast download via cellular connection, and NFC Pay. *See* Hr'g Tr. (Goldberg) at 229:6-239:1; CX-0853-CX-0855. Samsung contends that the DI Products do not practice limitation [1g] for the same reasons discussed above regarding 953 limitations [1f] and [30j], and this contention is rejected for the same reasons discussed. *See* RIB at 127-128. Maxell has thus shown that the DI Products meet limitation [1g].

c. Limitation [1i]

As explained above, Maxell has demonstrated that the DI Products meet this limitation because it does not require particular analysis of the Wi-Fi/Bluetooth chip, and the application processor CPU, whether Qualcomm or MediaTek, "assigns a connection to the first radio communication circuit for transmitting the video" based on a user indication according to practicing modes 1 and 2. Dr. Goldberg's testing confirmed that for each of the DI Products a user can use Bluetooth or Wi-Fi to transmit video information. *See* Hr'g Tr. (Goldberg) 240:10-241:10, 348:3-350:3; CX-0853-855; CX-175; CX-0263, CX-0283, CX-0300, CX-0318. Samsung contends that the 241 DI Products do not practice limitation [1i] for the same reasons discussed

above regarding 953 patent limitations [1f] and [30j], and this contention is rejected for the same reasons discussed. *See* RIB at 128-129. Maxell has accordingly shown that the 241 DI Products meet limitation [1i].

Therefore, Maxell has shown that all elements of claim 1 of the 241 are practiced by the DI Products.

7. Claim 5 of the 241 Patent

Maxell has shown that the DI Products practice claim 1 of the 241 patent, but for dependent claim 5, requiring a fourth modem, Maxell relies on separate radio circuits for the Wi-Fi and Bluetooth. *See* CIB at 157. As explained above, Maxell has not demonstrated that the DI Products include separate radios for Wi-Fi and Bluetooth. Accordingly, Maxell has not shown that the DI Products practice claim 5 of the 241 patent.

8. Claim 7 of the 241 Patent

Maxell has shown that the DI Products practice claim 1 of the 241 patent, but for dependent claim 7, Maxell relies on practicing modes 3 and 4, involving either Bluetooth or Wi-Fi. See CIB at because, in those modes, the third modem transmits video information to the external device. *See* CIB at 157. As explained above, however, Maxell has not demonstrated that the DI Products include separate modems for Wi-Fi and Bluetooth. Therefore, Maxell has not shown that the DI Products practice claim 7 of the 241 patent.

9. Claim 15 of the 241 Patent

Maxell has shown that the DI Products practice claim 1 of the 241 patent, but for dependent claim 15, requiring that the second and third modems demodulate using OFDM, Maxell identifies practicing mode 4, where Wi-Fi is the third radio circuit and Bluetooth is the first radio circuit. *See* CIB at 157; Hr'g Tr. (Goldberg) at 270:11-271:2. Again, though, Maxell has not shown the

existence of distinct first and third modems in mode 4, so Maxell has not shown that the DI Products practice claim 15 of the 241 patent.

10. Claim 28 of the 241 Patent

The limitations of claim 28 are largely the same as those of claim 1, and are present in the DI Products for the same reasons as claim 1, except that claim 1 recites an "imaging circuit," "compression circuit," "accumulation circuit," and "controller," while claim 28 recites four means-plus-function elements, including a "means for receiving video information," "means for compressing," and "means for accumulating." As with infringement, Maxell makes almost no effort to show the "means for compressing" in the DI Products, which it apparently identifies as an "encoder," is equivalent to the means for compressing disclosed in the patent. Hr'g Tr. (Goldberg at 227:24-228:8). The parties agreed that the corresponding structure disclosed in the patent is either "compression circuit 111" or "software," operating presumably on a general purpose computer. CIB at xvii (citing 241 patent at 3:55-67, 20:30-38). Maxell does not attempt to show that any "encoder" in the DI Products is structurally equivalent to compression circuit 111 or to software running on a computer, nor does it even describe the encoder's structure. *See* CIB at 155. And Dr. Goldberg simply agreed that some unidentified compression circuit "includes an encoder." Hr'g Tr. (Goldberg) at 227:24-228:8; *see* CDX-005C.72. So even though Samsung does not dispute its presence, the "means for compressing the still picture information using a first type of compression method and the video information using a second type of compression method" has not been shown in the DI Products. *See* RIB at 126-29.

Similarly, Maxell has not carried its burden of showing that the structure it maps to the "means for controlling" element is the same as or equivalent to a controller/TRA circuit combination. *See* CIB at 155. It is not even clear, in fact, what structure it has identified: the DI Products "include a QC or MediaTek chipset with an [application processor] that executes the

[redacted]

source code for the operating system and apps to control assignment of connections." *Id.* Neither a chipset nor an application processor is a controller, even if they perform the same functions, and Maxell does not even cite to the "equivalency" test in the Section 112(6) context. *See* CIB at 155. So although Samsung's dispute over the "means for controlling" element does not focus on Section 112(6), Samsung is correct that Maxell has not carried its burden of proving that this element is satisfied in any DI Product. *See* RIB at 127-28.

In short, Maxell has not proven the presence of the "means for compressing" or "means for controlling" in any DI Product. Accordingly, Maxell has not shown that the DI Products practice claim 28 of the 241 patent, or any claim of the 241 patent.

E. Validity

Samsung identifies the following invalidity theories for the 241 and 953 patents:

Claims	Theory
2 of the 953 patent	Anticipated under 35 U.S.C. § 102 by Dua (RX-0145)
2 of the 953 patent	Rendered obvious under 35 U.S.C. § 103 by Dua (RX-0145) in view of Honkanen (RX-0142)
9 of the 953 patent	Rendered obvious under 35 U.S.C. § 103 by Dua (RX-0145) in view of Leung (RX-0132)
9 of the 953 patent	Rendered obvious under 35 U.S.C. § 103 by Dua (RX-0145) in view of Honkanen (RX-0142) in view of Leung (RX-0132)
30 of the 953 patent	Rendered obvious under 35 U.S.C. § 103 by Dua (RX-0145) in view of Leung (RX-0132) and Herle (RX-0136)
30 of the 953 patent	Rendered obvious under 35 U.S.C. § 103 by Dua (RX-0145) in view of Honkanen (RX-0142) in view of Leung (RX-0132) and Herle (RX-0136)

1, 5, 7, 15, 28 of the 241 patent	Rendered obvious under 35 U.S.C. § 103 by Dua (RX-0145) in view of Herle (RX-0136), the N93, and Honkanen (RX-0142)
1, 5, 7, 15, 28 of the 241 patent	Rendered obvious under 35 U.S.C. § 103 by Dua (RX-0145) in view of Herle (RX-0136), the N93, Honkanen (RX-0142), industry standard radio specifications (Bluetooth, Wi-Fi, and WiMax), and Desai (RX-0147)
Claims 2, 9, 30 of the 953 patent	Invalid under 35 U.S.C. § 112: written description: first radio modem
Claims 9, 30 of the 953 patent	Invalid under 35 U.S.C. § 112: written description: processor
Claim 30 of the 953 patent and claims 5, 7, 15, 28 of the 241 patent	Invalid under 35 U.S.C. § 112: enablement: operating system updates
Claim 28 of the 241 patent	Invalid under 35 U.S.C. § 112: indefinite

See generally RIB at 132-89. U.S. Patent Pub. No. 2006/0258289 ("Dua") was filed on May 12, 2005, and published on November 16, 2006. RX-0145. U.S. Patent Pub. No. 2006/0135076 ("Honkanen") was filed on November 22, 2005 and published on June 22, 2006. RX-0142. U.S. Patent No. 7,010,808 ("Leung") was filed on August 25, 2000 and issued March 7, 2006. RX-0132. U.S. Patent Pub. No. 2004/0152455 ("Herle") was filed on February 5, 2003 and published on August 5, 2004. RX-0136. U.S. Patent Pub. No. 2006/0274704 ("Desai") was filed on March 23, 2006 and published on December 7, 2006. RX-0147. The Bluetooth Specification (RX-0175) was publicly available on the Bluetooth website as of February 24, 2006. RX-0256. The Wi-Fi Specifications, including 802.11/ag (RX-0375), 802.11a (RX-0372), and 802.11g (RX-0374) were published no later than June 12, 2007. RX-0371. The WiMax Specification (RX-0376) was published on February 28, 2006. RX-371. The Nokia N93 mobile phone was sold in the U.S. as early as September 30, 2006. *See* Hr'g Tr. (Buehrer) at 672:25-674:9; RX-1490C.

Both parties agree that the priority date of the 953 and 241 patents is November 28, 2007, based on a Japanese application. *See* CIB at 9; RIB at 132 (citing Hr'g Tr. (Buehrer) at 633:4-8; Hr'g Tr. (Goldberg) at 180:11-21). Dua, Honkanen, Leung, Herle, Desai, the Bluetooth and WiMax Specifications, and the N93 were all published, issued, or sold more than one year before the priority date, and are prior art to the 953 and 241 patents under 35 U.S.C. § 102(b) (pre-AIA). The Wi-Fi Specification was known to others in the U.S. before the invention date (i.e., November 28, 2007), and is prior art to the 953 and 241 patents under 35 U.S.C. § 102(a) (pre-AIA). Maxell does not dispute the prior art status of any of these references. *See generally* CIB at 164-179; CRB at 96-111.

1. Summary of References and a POSITA's Knowledge

Samsung advances three obviousness combinations for all asserted claims of the 241 patent, all involving at least Dua, Herle, and the N93. According to Samsung, it would have been obvious to combine Dua and Herle to implement Herle's over-the-air ("OTA") operating system ("OS") update functionality. *See* RIB at 135 (citing Tr. (Buehrer) at 659:5-663:3). Samsung contends that a person of ordinary skill would look to improve updating Dua's mobile device via well-known OTA techniques such as those in Herle, and that Herle provides an express motivation to incorporate OTA OS updates to upgrade software. *Id*. (citing Hr'g Tr. (Buehrer) at 660:5-25; RX-136 at ¶¶ [0003], [0004], [0007], [0018])).

Maxell argues that one of ordinary skill in the art would not make the asserted combination because Samsung's combination relies on the use of WiMax, and that Samsung's combination is driven by hindsight, and these arguments are addressed below. CIB at 169 (citing Hr'g Tr. (Goldberg) at 965:11-969:9, 979:2-980:7, 980:23-982:6; CX-0156; CX-0884; CX-0889). Maxell does not, however, specifically address why one of ordinary skill in the art would otherwise not

[redacted]

combine Dua and Herle. Maxell does not raise any specific dispute as to the combination with N93.

In any event, Dr. Buehrer explained why a person of ordinary skill would have combined Dua and Herle. Dr. Buehrer testified that Herle describes "over-the-air provisioning and upgrading of wireless mobile stations" as an "important aspect," and that sending a single image file can be problematic. Hr'g Tr. (Buehrer) at 660:5-21. Moreover, Dua discloses that its device includes a microprocessor running software, that the software operating on the media player should be updated, and that this could be an automatic update. *Id.* at 662:6-14.

As Dr. Buehrer explained, a person of ordinary skill would reasonably expect success, and implementing Herle's method in Dua merely applies a known solution to a known device to achieve predictable results. Hr'g Tr. (Buehrer) at 661:1-662:1. As for the N93, Dua discloses that its Media Player 100 can be a smartphone and Dua contrasts its NFC setup with a "normal Bluetooth" setup. RX-145 at ¶¶ [0009], [0123]-[0124]; *see* Hr'g Tr. (Buehrer) at 673:1-674:9. Both Dua and the N93 employ identical radios and protocols, and Dr. Buehrer testified that their combination would have been natural, and a person of ordinary skill, relying on well-known international standards, would have had a reasonable expectation of success executing that combination. *See* Hr'g Tr. (Buehrer) at 673:18-674:9.

As for Honkanen, the industry standard radio specifications (Bluetooth, Wi-Fi, and WiMax), and Desai, Maxell does not dispute that a POSITA would have been generally motivated to combine Dua, Herle, and the N93 with these additional references. *See* CIB at 174. As Dr. Buehrer explained, one of ordinary skill in the art would have been motivated to incorporate Honkanen's coexistence technique so that interference among Dua's radios is detected and minimized. Hr'g Tr. (Buehrer) at 652:15-655:25. Implementing Honkanen's techniques on Dua's

[redacted]

CPU would be a matter of using known programming techniques to obtain predictable results and would thus carry a reasonable expectation of success. *See id.*; Honkanen at Fig. 2, ¶ [0026]; Dua at Fig. 1, ¶ [0060]. As for the industry standard radio specifications (Bluetooth, Wi-Fi, and WiMax), and Desai, Dua discloses implementing Bluetooth, WiMax, and Wi-Fi radios. Dua at ¶ [0062]; Hr'g Tr. (Buehrer) at 663:6-667:16, 669:20-671:23.

2. 241 Patent

a. Claim 1

Claim 1 is presented above. Maxell raises several general objections to Samsung's obviousness combinations, but the only elements it specifically disputes are [1c], [1i], [1j], and [1k]. *See* CIB at 167-174. In light of the expert testimony and evidence cited, Samsung has shown the combination of Dua, Herle, and the N93 discloses all the other claim elements. RIB at 164-167, 171-174; Hr'g Tr. (Buehrer) at 651:1-652:14, 663:6-665:22, 671:2-672:23, 675:6-680:18, 677:3-678:21, 680:20-684:11, 684:24-686:14, 689:6-690:2, 694:7-695:8, 704:17-706:16, 710:21-711:3, 711:22-712:12, 714:3-715:25, 725:14-25; 727:4-15; RX-145 at ¶¶ [0057-0064], [0066], [0142-0143], [0166]-[0167], [0172], [0177], [0194], [0198], [0205-0207], [0225], [0230], Figs. 1, 8B, 18.

For limitation [1c], "a third radio communication circuit capable of transmitting information and using a third transmission frequency band," Samsung contends that it is disclosed in Dua because Dua discloses WiMax, and one of ordinary skill in the art would have found it obvious to implement WiMax as one of the radios in Dua's device. *See* RIB at 168-71 (citing Hr'g Tr. (Buehrer) at 651:1-652:14, 663:6-24, 669:20-670:15, 670:22-25, 708:24-710:18). Maxell argues that Samsung's proposed combination is driven by hindsight, because Samsung does not explain why one of ordinary skill in the art would have replaced a successful long-range

[redacted]

communication technology, such as 3GPP (i.e. cellular), with a combination of short-range technologies. *See* CIB at 169-70.

Samsung's proposal does appear to be driven by hindsight. To begin with, Dua discloses a device including network transceiver 105 and short range transceiver 108, where both are connected to antenna system 117, as shown in Figure 1:

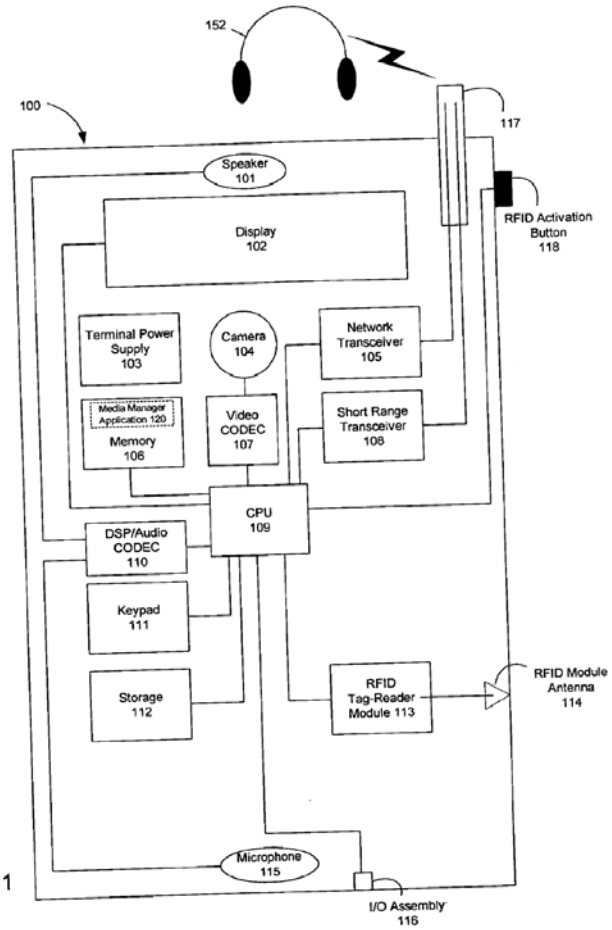

FIG. 1

RX-0145 at Fig. 1.

Dua explains that "media player 100 may also include components for sending and receiving media (e.g. antenna 117, and transceivers 105 and 108, etc.)." RX-0145 at ¶ [0061]. In particular, "short-range transceiver 108 and antenna 117 provide wireless connectivity with external devices or access points using supported communications protocols," while "CPU 109 is

[redacted]

also connected to network transceiver 105 for interacting with a cellular network, such as a Global System Mobile (GSM) network and the like via antenna 117." *Id.* at ¶ [0066]. Despite this disclosure in Dua that antenna 117 is used to connect to both a cellular network and a short-range network, Samsung proposes that Dua's antenna 117 is used for three short-range technologies: Bluetooth, Wi-Fi, and WiMax. *See* RIB at 164-167; RX-0145 at ¶ [0062].

Samsung argues that "Dua's disclosure of WiMax inherently discloses using the WiMax modulation scheme and frequency band to a person of ordinary skill because they are required to comply with Dua's teaching to use WiMax and the widest array of protocols to connect to other WiMax-capable devices." RIB at 1689 (citing RX-145 at ¶¶ [0062]-[0063]; *see* Hr'g Tr. (Buehrer) at 651:6-652:14, 663:6-24, 669:20-670:24, 709:3-710:5). While Dua does disclose WiMax, this disclosure is only within the list of protocols for supported short-range wireless communication:

> A short-range transceiver 108 and antenna 117 provide wireless connectivity with external devices or access points using supported communications protocols (e.g., Bluetooth, 802.11 a/b/g/n, Ultra Wideband, Wireless USB, 802.15.3/WiMedia, Wireless 1394, Wireless FireWire, WiMax, and 802.1 5.4/ZigBee). The short-range transceiver 108 and antenna 117 system also support broadcast standards such as AM, FM, UHF, VHF, and HDTV. Support for these broadcast standards allows the media player 100 to receive and broadcast radio and television signals over a short-range.

RX-0145 at ¶ [0062]. Samsung argues specifically that one of ordinary skill in the art would be motivated to include WiMax because Dua teaches using the "widest array of protocols." RIB at 168 (citing RX-0145 at ¶ [0063]). Dua recites:

> The short-range transceiver 108 and antenna system 117 are specifically designed to support the widest array of communication protocols and broadcast standards in order to allow the media player 100 to establish communication with a multiplicity of devices now available or which later become available.

RX-0145 at ¶ [0063]. Samsung takes the position that Dua's disclosure of these protocols equates to a disclosure of including each as a separate radio. *See* RIB at 168 ("Dua expressly tells a person

[redacted]

of ordinary skill to use multiple radios implementing the widest array of protocols, including a WiMax radio.”).

As Maxell points out, however, Samsung’s expert, Dr. Buehrer, testified that one of ordinary skill in the art would not equate a protocol with a radio. *See* CIB at 170; Hr’g Tr. (Buehrer) 1088:25-1089:15 (“I’ve highlighted the Bluetooth and WiFi protocols in bold because those are most important -- sort of highlight the problems with Dr. Goldberg’s theory. Q. What is the problem with his theory? A. Well, essentially, he's equating protocols with radios, and you can’t really do that.”). Samsung further argues that other prior art devices employed four or more radios, such that one of ordinary skill in the art would be familiar with incorporating multiple short-range radios in Dua’s device. *See* RIB at 169. This argument is waived as it was not included in Samsung’s pre-hearing brief. *See* CRB at 103; RPB at 154-55; G.R. 9.2.

Even were it not waived, Samsung fails to explain the motivation for the particular combination of radios it includes in its proposed device, combining Bluetooth, Wi-Fi, and WiMax. As Dr. Goldberg testified, “Dua does disclose a wide range of short-range transceiver communication protocols,” but Dua does not disclose “Bluetooth, WiFi, WiMAX, and NFC” together in any implementation. Hr’g Tr. (Goldberg) at 967:2-17. Samsung essentially argues that Dua’s disclosure of various protocols, including Bluetooth, Wi-Fi, and WiMax, amounts to sufficient disclosure to render obvious an implementation including three separate radios—one each for these three protocols. *See* RIB at 169. This does not rise to the level of clear and convincing evidence that it would have been obvious to one of ordinary skill in the art to make the proposed combination. Samsung offers no concrete reason why one of ordinary skill in the art would have made such a device, so its reasoning amounts to nothing more than speculation and hindsight.

Samsung's speculation is particularly pronounced regarding WiMax, which was neither commercially successful nor widely deployed. *See* Hr'g Tr. (Goldberg) at 965:11-969:9. Samsung argues that Dr. Goldberg is mistaken, and that WiMax was successful, with "575 operational WiMax base stations in the United States." RIB at 170 (citing CX-0889); *see also* CRB at 107. But the weight of the evidence shows that WiMax was not in broad distribution in terms of networks available. *See* Hr'g Tr. (Goldberg) at 968:20-23; CX-0889. The article Samsung cites explains that, for the WiMax rollout, "Sprint originally planned to launch [WiMax] service back in April, [but] the rollout fell behind schedule due to problems with provisioning backhaul." CX-0889. Dr. Goldberg testified, though, that there "were not material and tested and established chipsets, and there were problems with the rollouts." Hr'g Tr. (Goldberg) at 968:20-23. These technological and infrastructure deficiencies would have dissuaded one of ordinary skill in the art from assembling the device proposed by Samsung. Dua explicitly states that "[t]he short-range transceiver 108 and antenna system 117 are specifically designed to support the widest array of communication protocols and broadcast standards in order to allow the media player 100 to establish communication with a multiplicity of devices now available or which later become available." RX-0145 at ¶ [0063]. One of ordinary skill in the art would not incorporate WiMax because its lack of commercial success meant that it would not enable "communication with a multiplicity of devices." *Id.*

Samsung argues that Dua nonetheless discloses WiMax, and Dr. Goldberg "offers no sound basis for arguing that a person of ordinary skill would not do what Dua expressly urges a person of ordinary skill to do." RIB at 170-171. Yet Samsung points to no specific portion where Dua "urges" one of ordinary skill in the art to make the specific proposed combination. *See id.* At most, Dua teaches supporting the "widest array of communication protocols and broadcast

[redacted]

standards" (RX-0145 at ¶ [0063]), but, as Dr. Goldberg explained, "WiMAX would not be a selection that a POSITA would understand" (Hr'g Tr. (Goldberg) at 968:24-25).

Samsung further argues that the combination of Dua and Honkanen discloses this limitation because one of ordinary skill in the art would "implement Honkanen's coexistence technique" to include the WiMax radio. RIB at 171. Honkanen fails to cure the deficiencies of Dua because Honkanen makes no mention of WiMax. Here, too, Samsung relies too heavily on the offhand disclosure of the WiMax protocol among the nine separate protocols listed in paragraph 62 of Dua. And Samsung provides no particular reasoning to explain why one of ordinary skill in the art would make the specific proposed combination of Dua (using WiMax) and Honkanen, even if a skilled artisan would otherwise be so motivated. So element [1c], as Samsung has mapped it, is not disclosed in either Dua alone or Dua combined with Honkanen.

Maxell also disputes the disclosure of limitation [1i], which recites, "wherein when an indication from a user indicates to transmit video information using the first radio communication circuit, the controller assigns a connection to the first radio communication circuit for transmitting the video." *See* CIB at 171-172; 241 patent at cl. 1. Samsung (which calls this element [1h]) maps the first radio communication circuit to Bluetooth, and adds the N93 to Dua because the N93 teaches the controller assigning a connection to the N93's Bluetooth circuit for transmitting video upon a user indication to do so, namely, the user pressing in succession "Send," "Bluetooth," and an icon for the target device. *See* RIB at 174-76; Hr'g Tr. (Buehrer) at 717:15-718:13. Maxell contends that the Bluetooth file-sharing process of the N93 does not disclose this limitation because it includes an "accept" screen, requiring the receiving device to receive user input before assigning a connection to the first radio communication circuit. *See* CIB at 171-172. This is not

[redacted]

relevant, though, because the last step in satisfying the element is the circuit assignment, with no actual video transmission required. *See* 241 patent at cl. 1.

Maxell further disputes the disclosure of limitation [1j], which recites, "wherein the controller controls each of the first and second radio communication circuit so that the first radio communication circuit transmits video information while the second radio communication circuit connects to the internet or the home network." CIB at 172-173. Samsung (which calls this element [1i]) advances a hodgepodge of different theories on this element. Its first argument is that Dua discloses it. *See* RIB at 176. Dua does disclose Bluetooth (RX-0145 at ¶ [0062]), which Samsung identifies as the first radio circuit, as well as a CPU functioning as the claimed controller and responding to an "activation button" (*id*. at ¶¶ [0066], [0072]), and simultaneously connecting to the internet and transmitting video (*id*. at ¶¶ [0166]-[0168]).

As Maxell persuasively shows, however, Dua discloses a wide range of communication protocols and a variety of data types received and transmitted, but it never mentions Bluetooth in the context of video. *See* CIB at 166 (citing RX-0145 at ¶¶ [0126], [0128], [0166]). Samsung repeatedly asserts that Dua discloses "that each of the radios, including the first (Bluetooth) radio communication circuit can transmit video information" (RIB at 174), but not one of the over 55 paragraphs it cites for this proposition actually states that (*see generally* RIB at 164-77). So Dr. Buehrer's opinion on this point is not supported by the record. *E.g*., Hr'g Tr. (Buehrer) at 715:6-17 ("Dua teaches that the Bluetooth [modem] transmits video").

Samsung's first alternative to relying solely on Dua for element [1j] is the combination of Dua and Honkanen, but Dr. Goldberg testified that Honkanen does not disclose using Bluetooth for video transmission, nor does Samsung assert that it does. *See* RIB at 177; Hr'g Tr. (Goldberg) at 972:14-973:2. Next, Samsung advances "the combination of Dua, N93, and Herle" as disclosing

[redacted]

element [1j], but instead of relying on the N93, which was capable of transmitting video by Bluetooth (at least in 2026, when Dr. Buehrer tested it), Samsung continues to rely solely on Dua, and even incorrectly states that "Maxell does not dispute that Dua discloses" using Bluetooth for transmitting video. *See* RRB at 110-11; Hr'g Tr. (Buehrer) at 718:5-9. Lastly, Samsung adds Hankonen to form a four-reference obviousness combination, but again, Hankonen does not disclose using Bluetooth for video transmission, nor does Samsung contend it does. *See* RRB at 111-12. So Samsung has failed to show the disclosure of element [1j] in any asserted obviousness combination.

Maxell's final objection on the obviousness of claim 1 pertains to element [1k], which requires wirelessly receiving and then executing and storing an operating system update, and which Samsung argues is disclosed in the combination of Dua and Herle. *See* CIB at 173-74; RIB at 177-78. Specifically, Samsung argues that Dua's processor can run Herle's update system such that Herle's "upgrade server" tells Dua's device that an upgrade is available, and then transmits a "delta file" as an operating system update, which the device executes and stores as an "image file." *See* RX-0136 at ¶¶ [0053]-[0054]; RIB at 177-78. Dr. Goldberg explained, though, that a POSITA in November 2007 would not have considered this particular combination because of various concerns, including the security of over-the-air operating system updates, limitations on memory and battery life, and the presence in Dua of a single processor for multiple radio circuits. *See* Hr'g Tr. (Goldberg) at 975:6-21. Neither Samsung nor Dr. Buehrer address this problem. *See* RIB at 177-78 RRB at 112; Hr'g Tr. (Buehrer) at 701:9-15, 720:17-721:8. Dr. Goldberg's opinion is unrebutted, plausible, and accepted. Accordingly, Samsung has failed to show a POSITA would have had reason to combine Dua and Herle to achieve limitation [1k] with a reasonable expectation of success.

In view of the *Graham* factors, and especially the scope and content of the prior art and the differences between the claimed invention and the prior art, two elements of claim 1 ([1c] and [1j]) have not been shown, and as to a third element ([1k]) a POSITA would not have had a reason to modify Dua with the teachings of Herle with a reasonable expectation of success; there are no objective indicia of non-obviousness. *See* RIB at 182-83. On balance, Samsung has not shown by clear and convincing evidence that the proposed combination of Dua, Herle, and the N93, either with or without the other proposed references, would have rendered claim 1 obvious.

b. Claims 5, 7, and 15

Claims 5, 7, and 15 depend from claim 1. Maxell does not separately dispute that the proposed combinations would have rendered these claims obvious, beyond the lack of obviousness of claim 1, except that it disputes Dua's teaching of a fourth radio circuit, as required by claim 5. *See* CIB at 174; RIB at 178-79 (arguing that Dua discloses a fourth radio communication circuit). As explained above, a POSITA would not have been motivated to combine Bluetooth, Wi-Fi, and WiMax, so adding a fourth circuit (here, NFC) would have been even more non-obvious, even though Dua does disclose NFC. *See* RIB at 178-79 (citing RX-0145 at ¶ [0055]). Moreover, the largest number of circuits Dua shows as operating simultaneously is three, not four. *See* RX-0145 at Fig. 11. Samsung has thus not shown by clear and convincing evidence that the proposed combinations would have rendered dependent claims 5, 7, and 15 obvious.

c. Claim 28

Samsung argues that claim 28 would have been obvious over the proposed combinations for the same reasons as claim 1. *See* RIB at 180-182. Maxell raises the same objections regarding claim 28 as claim 1, which as noted is largely the same except for four means-plus-function elements. *See* CIB at 169-74. As explained above, the proposed combinations would not have rendered claim 1 obvious, at least because of a lack of disclosure of the third radio communication

[redacted]

circuit and simultaneous internet connection and video transmission (elements 28[c] and 28[j]), and because a POSITA would not have had a reason to modify Dua with the teachings of Herle with a reasonable expectation of success to perform over-the-air operating system updates (element [28k]). So although Samsung at least argues that the identified components are "identical or equivalent to" the corresponding means-plus-function structures, it has not shown by clear and convincing evidence that the proposed combinations would have rendered claim 28 obvious. *See* RIB at 180-82.

3. 953 Patent

a. Anticipation by Dua

According to Samsung, Dua anticipates claim 2 of the 953 patent. *See* RIB at 143. Maxell does not dispute Dua discloses limitations [1pre]-[1e] of independent claim 1 or [2pre], [2a], and [2c] of dependent claim 2. *See* CIB at 164-67. These claim elements have been shown in Dua, except for a portion of [1d], requiring a first radio modem to transmit or receive picture information, which is addressed below in conjunction with element [1f]. *See generally* RIB at 143-55; Hr'g Tr. (Buehrer) at 675:5-683:15, 691:25-694:20. Overall, Samsung has not shown claims 1 and 2 are anticipated by Dua.

Limitation [1f] reads "wherein the processor controls the first radio modem and second radio modem based on a user instruction, such that the first radio modem transmits the picture information to an external device while the second radio modem is connected to the internet or the local area network for transmitting and receiving the information which is different from the picture information." 953 patent at cl. 1. Samsung contends that it is disclosed in Dua because Dua discloses "at least three examples of the CPU ('processor') controlling the Bluetooth ('first') radio modem based on a user instruction such that the Bluetooth radio modem transmits picture information to an external device." RIB at 147 (citing Hr'g Tr. (Buehrer) at 685:5-686:14, 747:6-

[redacted]

17; RX-0145 at ¶¶ [0020], [0062], [0072], [0123-124], Figs. 8A, 8B). Samsung further contends that Dua discloses Wi-Fi or 3GPP as the second radio modem, with the CPU controlling the modem and the user selecting a recipient from a buddy list, and the transmitted and received information (for instance, internet protocol data) differing from the picture information. *See* RIB at 147-48 (citing Hr'g Tr. (Buehrer) at 686:16-687:3, 689:5-20, 726:20-727:3; RX-0145 at ¶¶ [0173]-[0174], [0178], [0185], [203]).

Maxell first argues that Dua does not teach this limitation because Dua depicts, in Fig. 11, a relay scenario in which Dua forwards the same content that is received from a broadcast to another device, and that this does not happen "while" Bluetooth transmits "picture information." *See* CIB at 166. But "Domain 850" shows receipt of internet data at the same time video is transmitted to a television:

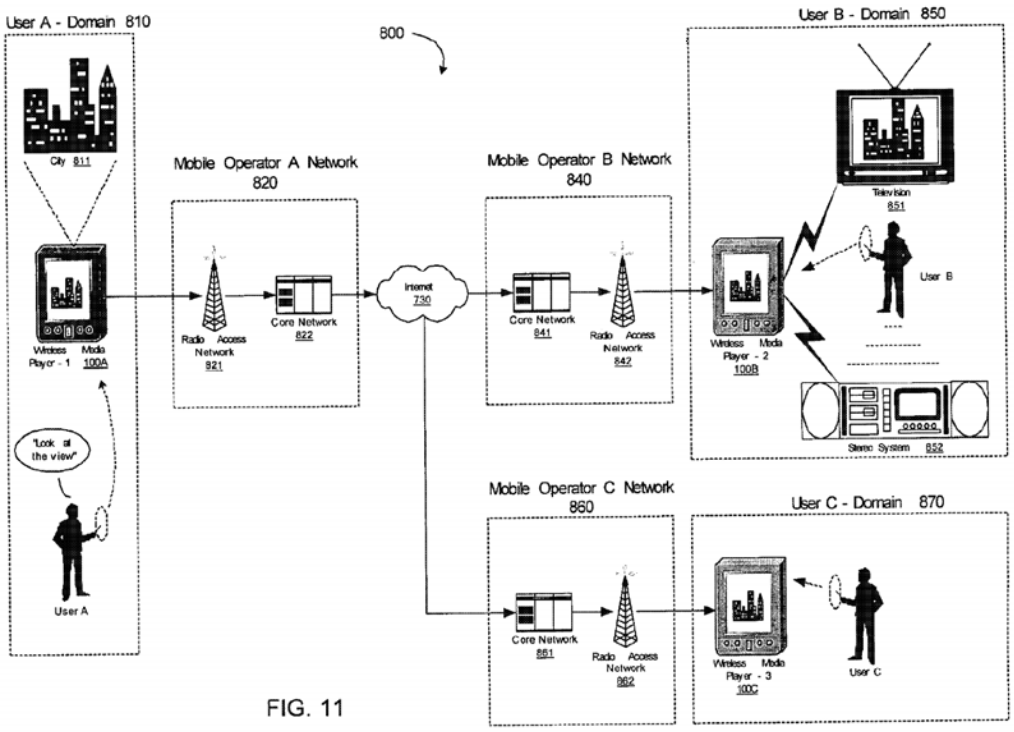

FIG. 11

RX-0145 at Fig. 11. And Dua explains that the incoming "video feed" from the internet gets "separated" so that the image portion goes to a television and the audio portion goes to a stereo. *Id*. at ¶ [0203]. Nothing in claim 1 requires a complete difference between the "picture information" of the first modem and the information transmitted and received by the second modem, so this satisfies the "different from" and "while" requirements.

Element [1f] also requires, however, that the first modem "transmit[] the picture information to an external device"; element [1d] similarly requires a first modem "to transmit or receive the picture information." 953 patent at cl. 1. As with claims 1 and 28 of the 241 patent, Samsung has failed to show that Dua's Bluetooth circuit, which it maps to the "first radio modem," transmits video. *See* CIB at 166. Samsung cites paragraphs [0020], [0062], [0063], [0123], [0124], [0196], and [0203], and Figures 7, 8B, 13, 14, and 18, as well as Dr. Buehrer's testimony, but again, none of those portions of Dua disclose sending either video or still images via Bluetooth, so Dr. Buehrer's testimony is again inconsistent with the record. *See* RIB at 145-51; RRB at 96-98. Samsung also cites the prosecution history of the 953 patent, but it is not clear why that is relevant for anticipation purposes. *See id*. at 145, 151. So Samsung has failed to identify a first radio modem that transmits picture information to an external device, as required by claim element [1f]. Samsung has accordingly failed to show by clear and convincing evidence that Dua discloses all the elements of claim 1.

Claim 2 depends from claim 1 and adds the requirements of third and fourth radio modems, controlled by the claimed processor and "capable of transmitting information to an additional external device." In contrast to its obviousness theories for the 241 patent, which relied on WiMax, Samsung identifies the first radio modem as Bluetooth, the second and third radio modems as Wi-Fi and 3GPP, and the fourth radio modem as either NFC or an RFID tag reader. *See* RIB at 152.

Nowhere, however, does Dua disclose all four radio modems controlled by the same processor based on one or more user instructions, as Maxell explains. *See* CIB at 167. At best it shows three unspecified modems operating simultaneously, as in Figure 11, above. Samsung thus has not shown by clear and convincing evidence that Dua anticipates claim 2 of the 953 patent.

b. Obviousness of Claim 2 Over Dua and Honkanen

Samsung contends that the combination of Dua and Honkanen would have rendered claim 2 of the 953 patent obvious. As explained above, Dua discloses all limitations of claim 1 except [1f] and part of [1d]. Again, limitation [1f] recites, "wherein the processor controls the first radio modem and second radio modem based on a user instruction, such that the first radio modem transmits the picture information to an external device while the second radio modem is connected to the internet or the local area network for transmitting and receiving the information which is different from the picture information." Honkanen discloses a control unit 104 comprising a means for controlling a number of simultaneous radio connections in the communication device 100. *See* RX-0142 at ¶ [0026]. Honkanen also teaches a technique for reducing "radio interference" when multiple radio communication devices are installed and operate simultaneously. *Id.* at [0033].

Samsung contends that one of ordinary skill in the art would have been motivated to combine Dua and Honkanen to arrive at the proposed combination, where a user employs Bluetooth to transmit picture information via the first radio modem while using the second radio modem (either Wi-Fi or 3GPP) to transmit the "different information," but Honkanen's disclosure actually undercuts Samsung's argument. *See* RIB at 157-158. For instance, Honkanen (like Dua) teaches that Bluetooth is used for audio or peripheral connections, with no mention of using Bluetooth for "picture information":

> A communication interface 112 provides another wireless connection 120, using Bluetooth®-technology, with a user interface component 106. The user interface component 106 may be for example a headset of a mobile telephone, comprising a

[redacted]

> microphone, a loudspeaker, and a communication interface for a Bluetooth® connection with the mobile telephone. The user interface component 106 may also be a keyboard or a mouse operating with a computer through a Bluetooth® link.

RX-0142 at ¶ [0023].

As Maxell suggests, Honkanen even teaches away from simultaneous Bluetooth and Wi-Fi, at least without using Honkanen's methods:

> In some cases no alternative exists for two connections (an existing connection and the connection in creation) but to use at least partly but even totally the same radio resources. In this case, the connection parameter manager 308 may determine, whether the new connection may be allocated with at least partly the same radio resources as the existing connection with a tolerable level of interference between the new connection and the existing connection. The tolerable level of interference between the connections may be such interference level that the connections do not block each other even though the effective data rate of the connections would be reduced. The connection parameter manager 308 may check the radio record 302 for knowledge of which radio connections may share at least partly the same radio resources and check the parameters of the connections for such case. The two connections then interfere with one another and, in the worst case, may block each other's operation totally. In such a case, other parameters of the connections could be adjusted so that the connections would tolerate as much interference as possible. Such parameters include modulation, coding (spreading code and/or channel code), interleaving, transmission power, and data rate. Other parameters of the connection may also be adjusted. An existing radio connection may even be put on a standby state or even terminated in order to create a new connection if the new connection has a higher priority than the existing connection, and it is not possible for the two connections to operate simultaneously. An alternative is that the creation of the new connection is terminated. In such a case, the connection parameter manager 308 informs the application/connection manager which requested the creation of the connection that the requested connection is currently unavailable.

RX-0142 at ¶ [0053]; *see* CIB at 168. One such set of connections that "interfere with one another" is Bluetooth and Wi-Fi. *See id.* at ¶ [0004] ("If there is a number of connections simultaneously operating on the same band, interference they cause to one another is much more severe than if they were operating on separate bands. Especially on the 2.4 GHz unlicensed Industrial, Scientific and Medical (ISM) band there may be several connections, for example Bluetooth® and wireless local area network (WLAN) connections, operating on the same band simultaneously."), ¶ [0049]; Hr'g Tr. (Goldberg) at 972:14-973:2.

Samsung cites the conclusory testimony of Dr. Buehrer that "Honkanen is teaching a coexistence algorithm, where the controller is controlling the parameters of each of these radios to reduce interference as much as possible," and "Honkanen teaches, in Paragraphs 49 and 53, that the coexistence algorithm will kick in and control the parameters of both connections." RIB at 139-140. But Samsung largely fails to address Honkanen's disclosure that simultaneous transmission may in fact be impracticable, especially given Honkanen's silence on using Bluetooth for transmission of picture information. *See* RRB at 101-02.

So Samsung has not shown by clear and convincing evidence that the combination of Dua and Honkanen discloses all elements of claim 1. Claim 2 adds the requirements of third and fourth radio modems, controlled by the claimed processor and "capable of transmitting information to an additional external device," and Maxell does not dispute that such a four-modem configuration is shown at least in Figure 2 of Honkanen. *See* RX-0142 at ¶ [0036], Fig. 2; CIB at 167-68. Nonetheless, because Samsung has not shown that elements [1d] and [1f] are fully disclosed by the combination of Dua and Honkanen, and in view of the *Graham* factors, Samsung has not clearly and convincingly shown that claim 2 would have been obvious over the combination of Dua and Honkanen.

c. Obviousness of Claim 9

Samsung asserts that claim 9 of the 953 patent would have been obvious over either the combination of Dua and Leung or the combination of Dua, Leung, and Honkanen. *See* RIB at 159-61. Claim 9 adds the requirements that "the first radio modem or the second radio modem receives picture information and control information," where, during reproduction of the received picture information, the processor "reads the control information to determine whether reproduction of the received picture information is allowed and reproduces the received picture information for display upon determining that reproduction is allowed." 953 patent at cl. 9. Maxell

[redacted]

does not dispute that Leung discloses encrypted digital content, header information, and a license, determining from the license whether the user's device is permitted to render the content, and then rendering it if permitted, which together satisfy the elements added to claim 1 by claim 9. *See* RIB at 159-61 (citing RX-0132 at 12:27-36, Fig. 5A); CIB at 168. Nevertheless, because Samsung has not shown that elements [1d] and [1f] are fully disclosed by the combination of Dua and Honkanen, or of Dua, Leung, and Honkanen, and in view of the *Graham* factors, Samsung has not clearly and convincingly shown that claim 9 would have been obvious over these combinations.

d. Obviousness of Claim 30

Samsung argues that claim 30 would have been obvious over either the combination of Dua, Leung, and Herle or the combination of Dua, Leung, Herle, and Honkanen. *See* RIB at 161-63. Claim 30 is, broadly speaking, a combination of claims 1, 2, and 9, and to the extent those claims' elements are disclosed in the asserted combinations, they are found for claim 30, a point Maxell does not challenge. *See* CIB at 169. However, Samsung argues that limitation [30j] ("wherein the processor controls the first radio modem and the second radio modem based on a user instruction, such that the first radio modem transmits the picture information to an external device while the second radio modem is connected to the internet or the local area network for transmitting and receiving the information which is different from the picture information") is disclosed either by Dua alone or by the combination of Dua and Hankonen. *See id*. at 162. As noted for claim element [1f], this is incorrect. Samsung therefore has not shown by clear and convincing evidence, and in view of the *Graham* factors, that the proposed combination of Dua, Honkanen, and Leung, with or without Herle, would have rendered claim 30 obvious.

4. Section 112

Samsung contends that claim 28 of the 241 patent is invalid as indefinite under 35 U.S.C. § 112, and that defense was rejected above. Samsung also contends that all asserted claims of the 241 and 953 patents are invalid under Section 112 based on various theories. *See* RIB at 183-89.

Samsung argues, first, that all claims requiring an operating system update, namely, claim 30 of the 953 patent and claims 5, 7, 15, and 28 of the 241 patent, are not enabled. *See* RIB at 187-89. Its enablement case is predicated largely on the testimony of Dr. Goldberg, who agreed that implementing operating system updates for advanced devices like Dua and the N93 was "beyond ordinary skill." Hr'g Tr. (Goldberg) at 1004:16-23. As Maxell explains, Samsung takes this testimony out of context. *See* CIB at 109-10. And Samsung does not rely at all on Dr. Buehrer, except to repeat his observation that the shared specification does not disclose how to perform an update. *See* RRB at 118. This is understandable, because Dr. Buehrer never stated that performing an operating system update in the claimed manner would be beyond the abilities of a POSITA. *See* Hr'g Tr. (Buehrer) at 647:19-649:21. Nor does Samsung address the *Wands* factors. *See In re Wands*, 858 F.2d 731, 736-37 (Fed. Cir. 1988). On balance, Samsung's evidence and analysis is insufficient to show lack of enablement of any claim.

Samsung also argues a lack of written description for the asserted claims of the 953 patent, on the ground that claims 1 and 30 recite "implements a transmission scheme to transmit or receive the picture information," but the written description "does not disclose the first radio modem implementing a transmission scheme to 'receive the picture information.'" RIB at 183. According to Samsung, the specification does not disclose to a person of ordinary skill in the art that the inventor was in possession of a first radio capable of bi-directional communication. *See id*. at 183-185.

The record does not support Samsung's position. Under Section 112, a patent's written description must "reasonably convey[] to those skilled in the art that the inventor had possession of the claimed subject matter as of the filing date," that is, it must "describe an invention understandable to [a] skilled artisan." *Ariad*, 598 F.3d at 1351. The specification recites that "the modem 1002 is a first radio communication unit which wirelessly sends video information and audio information to the external video display apparatus 200 and which receives data and information by radio therefrom." 953 patent at 7:54-58. As Dr. Goldberg explained, modem stands for "modulator-demodulator," and a modem is by definition capable of both transmission and reception. Hr'g Tr. (Goldberg) at 982:7-984:7. Thus, a POSITA would understand that if the modem can transmit video it can also receive it, even if the specification does not explicitly say so. Samsung has therefore not shown by clear and convincing evidence that the 953 specification provides inadequate written description regarding the first radio modem.

Samsung lastly argues that claims 9 and 30 of the 953 patent are invalid for lack of written description, based on the recitation: "during reproduction of the received picture information, the processor reads the control information to determine whether reproduction of the received picture information is allowed and reproduces the received picture information for display upon determining that reproduction is allowed." *See* RIB at 185-87. According to Samsung, no disclosed processor "reads control information for purposes of display," and no disclosed processor "both reads control information and controls radios." *Id.* (citing Tr. (Buehrer) at 644:9-646:18; 953 patent at Figs. 1 and 2, 4:47-54, 4:61-67, 11:5-33).

For both claims 9 and 30, there must be a "processor" that performs three functions: (1) controlling the first and second radio modems based on a user instruction such that at least the first modem transmits picture information to an external device; (2) "read[ing] the control information

[redacted]

to determine whether reproduction of the received picture information is allowed" during reproduction; and (3) "reproduc[ing] the received picture information for display upon determining that reproduction is allowed," also during reproduction. 953 patent at cl. 30. As noted above for claim construction purposes, in the embodiments showing four modems (as in claim 30) the modems are controlled by a combination of a controller and a TRA control circuit based on a user instruction, resulting in video information being transmitted to a display. *E.g.*, 953 patent at Fig. 4, 8:41-53. The overall "system" disclosed in the 953 patent's specification includes two "video processing apparatuses," designated 100 and 200, which are connected "via a bidirectional interface." *Id.* at 3:29-39, Fig. 10. These two apparatuses include numerous individual components and circuits, including controller 132 and TRA control circuit 1001 in one apparatus and controller 2013 and TRA control circuit 2017 in the other:

FIG. 1

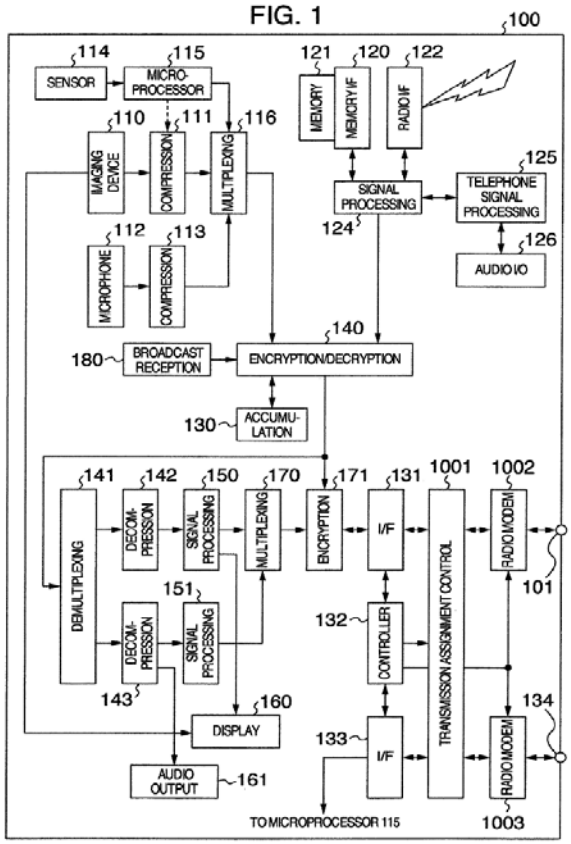

FIG. 2

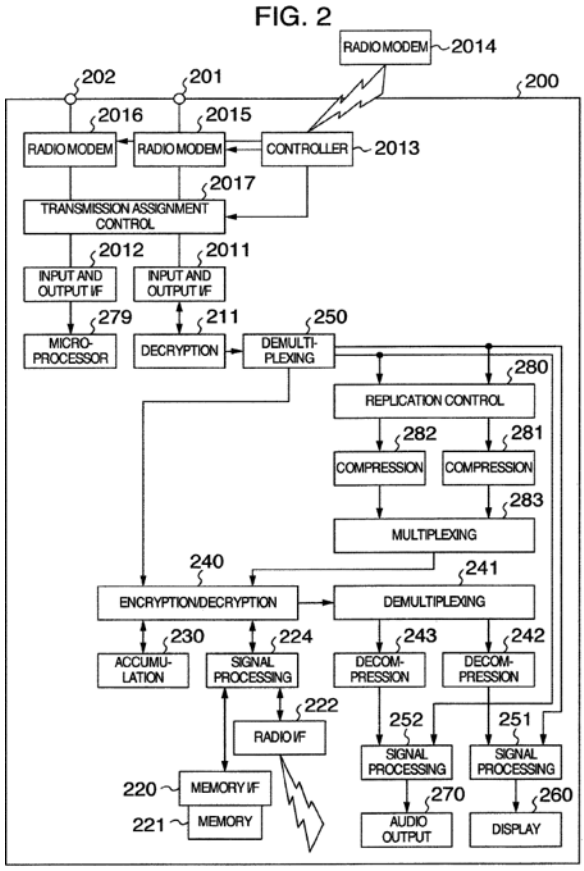

[redacted]

Id. at Figs. 1 and 2.

One component of the overall system is "replication control" circuit 280, which "reads, from the content, multiplexed replication control information to determine whether or not replication of the content is allowed." 953 patent at 11:14-17, Fig. 2. In one embodiment, the incoming signal is received, decrypted by "decryption circuit 211," separated into video and audio by "demultiplexer circuit 250," and then, if replication control circuit 280 permits, compressed by "compression circuits 281 and 282," multiplexed by "multiplexer circuit 283," encrypted by "encryption/decryption circuit 240," and stored in "storage 230" or "memory 221." *Id*. at 11:11-33. Maxell mainly relies on replication control circuit 280 as disclosing the required processor. *See* CIB at 177-78.

But an even more pertinent embodiment involves encryption/decryption circuit 240, which can also "read[] copy control information of the content to be stored and encrypt[] the content for the storage thereof according to the information." *Id*. at 10:17-20. As Figure 2 shows, the picture information is displayed by a process employing many circuits: encryption/decryption circuit 240 sends content to "demultiplexer circuit 241," which sends it to "decompression circuits 242 and 243," and then to "signal processing circuits 251 and 252," and finally to "the display." *Id*. at Fig. 2, 10:22-34. This last process clearly discloses "reproduc[ing] the received picture information for display," and because it involves reproduction for display after a copy control check has succeeded, the reproduction occurs "upon determining that reproduction is allowed." 953 patent at cl. 30. And in this embodiment the "user views the compressed signal received via the terminal 201 while storing the signal in the storage," that is, reading the control information and reproducing the picture information for display both occur "during reproduction of the received picture information." *Id*. at 10:22-24.

[redacted]

Figure 1 shows yet another set of components performing the same or similar functions:

> In this situation, the signal processing circuit 124 checks to determine whether or not the copyright of the contents recorded in the memory 121 is protected and whether or not the duplication thereof is prohibited. According to the detected condition, the encryption/decryption circuit 140 encrypts the contents and moves the encrypted contents in the storage 130.
>
> Similarly, audio and video contents of still and moving pictures are received as inputs by a radio interface 122. The contents are stored via the signal processing circuit 124 and the encryption/decryption circuit 140 in the storage 130. Also, according to conditions of the copyright protection and the replication restriction, the contents are encrypted by the encryption/decryption circuit 140, as required.
>
> When it is desired to reproduce a content stored in the storage 130 to view the reproduced content, the user selects the content by an input key or a remote control, not shown. The selected content is read from the storage 130 to be decoded by the encryption/decryption circuit 140 and is then separated by a demultiplexer circuit 141 into an audio signal and a video signal.

Id. at 4:47-67, Fig. 1. Collectively the specification discloses a large collection of components, together performing the claimed functions of the "processor"—including at least controller 2013, TRA control circuit 2017, replication control circuit 280, encryption/decryption circuit 240, demultiplexer circuit 241, and decompression circuits 242 and 243—and Maxell does not dispute that any disclosed "processor" cannot be a single circuit or component. *See* CIB at 177-78.

Maxell instead argues that a POSITA "would understand that the disclosed circuitry, including controller, circuit 280, and related components, can collectively constitute the claimed 'processor' that performs the recited functions." CIB at 178. As Dr. Goldberg testified:

> One, a processor is one or more, and two, throughout the entire specification, and certainly at the end of the specification, the inventors made clear that their processors could be combined, or modifications or variations could be made to the appointments, which I believe more than cover the written description of this particular limitation.

Hr'g Tr. (Goldberg) at 984:1-985:2. Dr. Buehrer testified that the individual circuits 124 and 280 alone cannot perform all the functions required of the claimed processor, and that is plainly correct. *See* Hr'g Tr. (Buehrer) at 643:23-647:18. But it ignores Maxell's contention that the various

"related components" can collectively constitute the processor. CIB at 178. This contention is supported by the specification's common practice of referring to the various components by their function or as "circuits," rather than as "processors," by the fact that all the needed components appear together at least in apparatus 200, suggesting that the whole apparatus may qualify as the claimed "processor," and by the knowledge of a POSITA, who surely would have recognized that a "circuit" is not necessarily alone a "processor," and a processor can be comprised of many disparate circuits and other components. The specification even suggests that different components, including a "controller 2013" and a "microprocessor 279," can be combined into "one unified module." 953 patent at 11:51-55. And contrary to Samsung's assertion, that suggestion clearly pertains to the circuitry of Figure 2, involving controller 2013 and TRA control circuit 2017. *See id.*; RRB at 116.

In view of such evidence, a skilled artisan would have recognized that the claimed processor could be a combination of different individual circuits in one "module," and that the inventors possessed the subject matter of claims 9 and 30 as of the priority date. Samsung has accordingly not shown claims 9 and 30 of the 953 patent to be invalid as lacking adequate written description for the processor limitation.

VIII. DOMESTIC INDUSTRY - ECONOMIC PRONG

In a patent-based complaint, a violation of Section 337 can be found "only if an industry in the United States, relating to the articles protected by the patent ... concerned, exists or is in the process of being established." 19 U.S.C. § 1337(a)(2). Under Commission precedent, this "domestic industry requirement" of Section 337 consists of an economic prong and a technical prong. *Stringed Instruments*, Inv. No. 337-TA-586, Comm'n Op. at 12-14. The complainant bears the burden of establishing that the domestic industry requirement is satisfied. *See Certain Set-Top*

[redacted]

Boxes and Components Thereof, Inv. No. 337-TA-454, Initial Determination at 294 (June 21, 2002) (not reviewed in relevant part).

The economic prong of the domestic industry requirement is defined in subsection (a)(3) of Section 337 as follows:

> (3) For purposes of paragraph (2), an industry in the United States shall be considered to exist if there is in the United States, with respect to the articles protected by the patent, copyright, trademark or mask work concerned --
>
> (A) Significant investment in plant and equipment;
>
> (B) Significant employment of labor or capital; or
>
> (C) Substantial investment in its exploitation, including engineering, research and development, or licensing.

19 U.S.C. § 1337(a)(3). The economic prong of the domestic industry requirement is satisfied by meeting the criteria of any one of the three factors listed above. Investments in plant and equipment and labor or capital that may fairly be considered investments in research and development are eligible for consideration under Subsections (A) and (B), in addition to Subsection (C). *See Certain Solid State Storage Drives, Stacked Electronics Components, and Products Containing Same*, Inv. No. 337-TA-1097, Comm'n Op. at 14 (June 29, 2018) ("*Solid State Storage*").

A. Subsection (A)

Maxell asserts a domestic industry exists under Subsections (A) and (B). *See* CIB at 179. Maxell relies on the domestic investments of its licensee, Motorola Mobility, LLC ("Motorola"). *See id*. (citing Hr'g Tr. (Jarosz) at 549:6-12; Hr'g Tr. (Yamamoto) at 19:6-20:9; CX-100C). Motorola is licensed to practice the Asserted Patents through an agreement dated June 20, 2023, and thus Maxell contends that the relevant time period is between June 20, 2023, and December 16, 2024, when the Complaint was filed. *See id*. at 180.

[redacted]

According to Maxell, Motorola makes significant and substantial U.S. investments in engineering, research, development, and design ("ERDD") that resulted in the introduction of the DI Products. *See* CIB at 181 (citing Hr'g Tr. (Chan) at 50:10-51:5, 53:8-62:4; Hr'g Tr. (Jarosz) at 563:16-565:45; 596:3-600:22; CX-401C; CX-456; CX-463; CX-439C; CX-491C; CX-495C). Motorola's facilities are engaged in product design, engineering, and improving the DI Products. *See* Hr'g Tr. (Jarosz) at 556:6-12; CX-453C.7; JX-23C.6.

As of December 2024, Motorola had three facilities in the U.S. conducting activities related to the DI Products. *See* Hr'g Tr. (Jarosz) at 562:2-20; Hr'g Tr. (Chan) at 46:1-8. In Chicago, [redacted] sq. feet was designated for labs and employee offices, with [redacted] sq. feet dedicated to [redacted] laboratories used for the DI Products. *See* Hr'g Tr. (Chan) at 53:17-54:3; JX-23C.6; CX-439C. CX-453C.5; JX-23C.7-8. The San Jose facility conducted engineering and software development, as well as marketing and sales, including for the DI Products, accounting for more than [redacted]% of Motorola's total area. *See* Hr'g Tr. (Chan) at 53:23-54:13; JX-23C.6; CX-453C.6, CX-439C. Motorola's Fort Worth facility supports refurbishment of smartphones, including DI Products. *See* CX-439C; JX-23C.7, 21.

Because Motorola's U.S. plant investments cover all Motorola products, Mr. Jarosz provided a sales-based allocation methodology to calculate the investments reasonably allocable to the DI Products. *See* Hr'g Tr. (Jarosz) at 563:3-5; Hr'g Tr. (Chan) at 50:4-9. Mr. Jarosz calculated the DI Products' share of Motorola's total US sales revenues, according to the following chart:

[redacted]

Sales Based Allocation Factors by Patent CDX-0008C.15

Total U.S. Motorola Sales Revenue ($ millions)	Jun. 20 – Dec. 2023	Jan. – Dec. 2024	Total Jun. 20, 2023 – Dec. 2024
Total U.S. Motorola Sales Revenue	[redacted]		
DI Products Sales Revenue by Patent			
'280			
'004/'953/'241			
'103			
Sales-Based Allocation Factors			
'280			
'004/'953/'241			
'103			

CDX-0008C.16; *see* Hr'g Tr. (Jarosz) at 566:25-568:7; CX-397C-398C; CX-394, CX-490C. Mr. Jarosz then calculated Motorola's U.S. plant investments in the DI Products by multiplying the total investment by the DI Products' share:

Motorola U.S. Plant Investments Allocated to DI Products ($ millions) CDX-0008C.16

	Jun. 20 – Dec. 2023 [A]	Jan. – Dec. 2024 [B]	Total [A] + [B]
Total U.S. Plant Investments	[redacted]		
Sales Based Allocation by Asserted Patent			
All Asserted Patents			
'280			
'004/'953/'241			
'103			
Allocated to DI Products			
All Asserted Patents			
'280			
'004/'953/'241			
'103			

CDX-0008C.17; *see* Hr'g Tr. (Jarosz) at 571:12-24; CX-401C; CX-439C. This chart was made under the assumption that the same DI Products practice the 004, 953, and 241 patents, but as the Razr (2023), Razr (2024), Razr+ (2023) and Razr+ (2024) were removed from the DI Products list

[redacted]

for the 004 patent, Mr. Jarosz recalculated the 004 DI Products plant and equipment as $[redacted] million for Jun. 20–Dec. 2023, $[redacted] million for Jan.–Dec. 2024, and $[redacted] million for the total time period. *See* Hr'g Tr. (Jarosz) at 569:22-570:6, 571:5-10; CX-401C; CX-398C; CX-439C.

Mr. Jarosz estimated equipment maintenance investments for the relevant time period based on produced data for FY 2019 through Sept. 30, 2023 using the ratio of [redacted] expenses to [redacted] equipment investments from Jan.-Sept. 30, 2023. *See* Hr'g Tr. (Jarosz) at 572:18-573:12. Using the same sales-based allocation methodology and percentages from above, the investments in equipment allocated to the DI Products for each Asserted Patent are as follows (in millions):

Motorola U.S. ERDD Equipment Investments Allocated to DI Products ($ millions) CDX-0008C.18

	Jun. 20 – Dec. 2023 [A]	Jan. – Dec. 2024 [B]	Total [A] + [B]
Total ERDD Equipment Investments	[redacted]		
Sales Based Allocation by Asserted Patent			
All Asserted Patents			
'280			
'004/'953/'241			
'103			
Allocated to DI Products			
All Asserted Patents			
'280			
'004/'953/'241			
'103			

CDX-0008C.18. Using the revised 004 percentages, the 004 equipment investments totaled $[redacted] million for Jun. 20–Dec. 2023, $[redacted] million for Jan.–Dec. 2024, and $[redacted] for the total time period. *See* Hr'g Tr. (Jarosz) at 573:14-22.

Mr. Jarosz relied on projections for most of his equipment investment calculations after October 2023. *See* Hr'g Tr. (Seth) at 1457:7-21; Hr'g Tr. (Jarosz) at 572:18-573:11, 586:18-587:2, 593:5-15, 594:8-18, 611:22-612:18. Maxell contends that Mr. Jarosz properly relied on

[redacted]

projections because these projections were derived using actual data, and "[redacted]." CRB at 114-115 (citing Hr'g Tr. (Jarosz) at 572:16-573:12, 586:1-587:8, 588:11-589:2, 592:9-594:22). Maxell is unconvincing, as Samsung explains. *See* RIB at 191. Mr. Jarosz did not ask Motorola to validate his work. *See* Hr'g Tr. (Jarosz) at 587:3-8. Maxell has not demonstrated the reliability of its projections and relies on Mr. Jarosz's conclusory testimony to argue that "it is likely the average would yield a number that is close to correct." CIB at 189 (citing Hr'g Tr. (Jarosz) at 587:3-8 ("an average would likely get a number that's very close to correct")). So Mr. Jarosz's projected expenses have not been considered in evaluating Motorola's domestic industry investments.

But even removing these projected equipment investments, Mr. Jarosz still demonstrated a total of $[redacted] million of pre-allocation investments in plant and equipment derived directly from Motorola data. For instance, a Motorola spreadsheet details the amount of rent Motorola pays for each of its facilities. *See* Hr'g Tr. (Jarosz) at 561:11-562:20; CX-439C. And Mr. Chan testified as to the total square footage of Motorola's U.S. facilities as well as the annual leasing costs of those facilities. *See* Hr'g Tr. (Chan) at 53:9-54:23. In sum, excluding all projections, from June 20, 2023 through 2024 the total calculated U.S. plant and equipment investments allocated to DI Products were $[redacted] million for the 280 patent, $[redacted] million for the 004 patent, $[redacted] million for each of the 953 and 241 patents, and $[redacted] million for the 103 patent. *See* Hr'g Tr. (Jarosz) at 573:23-574:5; CX-399C.

B. Subsection (B)

Mr. Jarosz calculated labor costs for full-time employees employed in ERDD activities from June 20, 2023 through December 2024 to be $[redacted] million. *See* Hr'g Tr. (Jarosz) at 584:18-585:3; Hr'g Tr. (Chan) at 58:19-61:4; CX-495C; JX-23C.11-12. CX-404C; CX-405C. Samsung

[redacted]

argues that Mr. Jarosz derived more than 57 percent of the claimed prong (b) investments from an eight-row spreadsheet that contains no details about the employees or their roles and therefore does not connect the employees' activities to the DI Products. *See* RIB at 191 (citing Hr'g Tr. (Seth) at 1456:12-22; CX-495C). According to Samsung, Motorola's witness only testified that the spreadsheet reflected labor costs for full-time employees, and admitted he did not know whether this group's work actually relates to the DI Products. *See* RIB at 191 (citing Hr'g Tr. (Chan) at 58:19-60:25, 66:23-68:1. Samsung further contends that Mr. Jarosz similarly did not substantiate the data underlying operating expenses ([redacted] percent of the claimed DI expenses). *See* RIB at 191 (citing Tr. (Seth) at 1456:12-1457:6).

Samsung's criticisms are unconvincing. The spreadsheet itself states: "[redacted]." CX-0495C. Moreover, Mr. Chan provided additional detail regarding the contents of the spreadsheet at issue. As he explained, this spreadsheet was limited to [redacted], excluding employees with [redacted], so that the "[redacted]." Hr'g Tr. (Chan) at 59:22-60:14, 72:11-73:3; *see also* Hr'g Tr. (Jarosz) at 584:18-585:3.

Mr. Jarosz further calculated third-party contract labor associated with ERDD activities. *See* Hr'g Tr. (Jarosz) at 586:1-17; CX-404C; CX-496C; CX- 436C.7-8; CX-453C.8-9; CX-455C.23-24, 71-72. He also projected contract labor costs after Sept. 2023 using previous monthly averages. *See* Hr'g Tr. (Jarosz) at 586:18-587:2; CX-496C; CX-455C.72. As discussed above, Maxell has not substantiated or validated Mr. Jarosz's projected costs, and for this reason these costs have not been included in the evaluation of domestic industry investments.

Samsung further argues that the investments at issue are not tied to the DI Products because some of the DI Products were released before the date of the Motorola-Maxell license. *See* RIB

at 191 (citing Hr'g Tr. (Seth) at 1449:17-22, 1450:10-1451:2). Samsung further argues that Mr. Jarosz included ERDD investments that took place after these DI Products were released without offering any evidence that would permit an allocation of ERDD investments to the DI Products. *See* RIB at 193 (citing Hr'g Tr. (Seth) at 1450:8-1451:6; RX-4651, RX-4652, RX-4653, RX-4655, RX-4656, RX-4659).

Samsung's complaints are overly nitpicky. As Mr. Jarosz explained, even if the pre-June 20, 2023 released products were removed, the sales-based allocation for each Asserted Patent would decrease only slightly. *See* Hr'g Tr. (Jarosz) at 590:7-591:7. For example, as Dr. Seth admitted, three 2024 products (the Moto G 5G, Moto G Power G, and Moto Razr) alone had over $[redacted] million in sales in 2024. *See* Hr'g Tr. (Seth) at 1479:3-1481:8. A sales-based allocation for the Moto G 5G alone would result in a labor allocation of $[redacted] million in 2024. *See id.* As Mr. Jarosz testified, excluding the pre-June 20, 2023 released products would not affect the substance of his significance opinions. *See* Hr'g Tr. (Jarosz) at 590:7-591:7.

Samsung additionally argues that Maxell cannot rely on the ERDD investments, which make up nearly [redacted] percent of the claimed sub-prong (b) investments and nearly [redacted] percent of the overall investments, because those are not investments in the DI Products but rather investments in future products. *See* RIB at 193-194 (citing Hr'g Tr. (Seth) at 1450:8-1451:6). As Mr. Jarosz explained, however, the ERDD work "covers the entire life cycle of the product, from initial formation of an idea through development of the product, through delivery of the product to the customer, through monitoring the customer experience and figuring out if there are problems, to correcting those problems, and to updating as necessary." Hr'g Tr. (Jarosz) at 554:24-55:23; *see also id.* at 556:13-561:9; *see also* Hr'g Tr. (Chan) at 50:14-51:5. Moreover, the next generation

[redacted]

of products, such as the Moto G and Moto G Power, both released in 2025, were also covered by 2023 investments. *See* Hr'g Tr. (Jarosz) at 565:22-566:6, 589:3-25.

Mr. Jarosz also explained that three main categories of capital investments support DI Products: Testing and Certification, ERDD Materials, and Other. *See* Hr'g Tr. (Jarosz) at 591:8-15. He calculated Motorola's testing and certification work, including [redacted], among others. *See* Hr'g Tr. (Jarosz) at 591:17-23; CX-453.10-11; CX-455C.25, 72, 74; CX-436C.8- 9; CX-496C. Mr. Jarosz further calculated Motorola's capital investments in the US for ERDD materials. *See* Hr'g Tr. (Jarosz) at 593:1-4; CX-453C.11; CX-477C; CX-455C.26, 29, 75; CX-436C.9. He then calculated Motorola's other domestic capital investments, such as software licenses and IT hardware, which are needed for the development and improvement of DI Products. *See* Hr'g Tr. (Jarosz) at 593:20-594:7; CX-406C; CX-453C.10; CX-455C.74; CX-436C.8.

Excluding any projections, Motorola's total US labor investments allocated to DI Products was $[redacted] million for the 280 patent, $[redacted] million for the 004 patent, $[redacted] million for each of the 953 and 241 patents, and $[redacted] for the 103 patent. *See* Hr'g Tr. (Jarosz) at 587:9-588:7; CX-404C; CX-495C; CX-398C.

C. Significance and Substantiality

"Significant" and "substantial" are relative terms, so some sort of comparative investment analysis must be made to assess the "*relative* importance of the domestic activities." *See, e.g.*, *Certain Carburetors and Products Containing Such Carburetors*, Inv. No. 337-TA-1123, Comm'n Op. at 17-19 (Oct. 28, 2019) (emphasis in original). As an initial matter, the DI Products have been commercially successful, with revenues of $[redacted] in 2023 and 2024. *See* Hr'g Tr. (Jarosz) at 596:23-597:4; CX-397C; CX-490C. Moreover, as Mr. Jarosz explained, the success of the DI

Products has led to investing and reinvesting in Motorola's U.S. activities, demonstrating the qualitative significance of the DI Products in terms of growing the domestic industry. *See id.* at 598:3-13.

There is little doubt that Motorola's investments are significant. Samsung argues that significance has not been shown because of the temporal offset between the claimed investments and the DI Products, i.e., because the investments were in ERDD, but the DI Products were released before or shortly after the relevant time period began. *See* RIB at 194. As Mr. Jarosz explained, however, the DI Products would not have been designed, developed, launched, improved upon, or extended in the U.S. without these ERDD investments and activities. *See* Hr'g Tr. (Jarosz) 595:22-596:22. Moreover, DI Products released in 2024 and 2025, including the Moto G and Moto G Power, were unquestionably developed using these ERDD investments. *See id.* at 565:22-566:6, 589:3-25. Samsung further argues that Mr. Jarosz improperly relied on Maxell's contention interrogatory responses, but Mr. Jarosz relied upon Motorola and third-party evidence as well to demonstrate the success and significance of the DI Products. *See* RIB at 194; Hr'g Tr. (Jarosz) at 596:23-598:13; CX-397C; CX-490C; CX-500; CX-501.

Samsung argues that Mr. Jarosz's analysis does not demonstrate a quantitative context for the alleged DI investments, and that his comparison of certain Motorola U.S. investments to Motorola's global investments only provide partial comparisons that do not provide context for the full set of investments he claims. *See* RIB at 194-195. Samsung's arguments are unfounded. First, as Mr. Jarosz explained, Motorola's investments allocated to the DI Products are significant in the context of the company's global activities, because [redacted] of the company at the time was comprised of supporting and selling the DI Products. *See* Hr'g Tr. (Jarosz) at 598:25-599:12; CX-440C.2; CX-413C; CX-490C; CX-120C. As Mr. Chan testified, DI Product sales made up roughly

% of Motorola's total U.S. sales in 2023-2024. *See* Hr'g Tr. (Chan) at 72:3-10; CX-490C. Samsung's expert, Dr. Seth, agreed that Motorola's sales of the DI Products during 2023-2024 account for a significantly high proportion of Motorola's U.S. revenues during the timeframe. *See* Hr'g Tr. (Seth) at 1467:8-23.

Second, Motorola's U.S. headcount dedicated to the DI Products is also significant relative to Motorola's worldwide footprint. As Mr. Jarosz testified, Motorola had employees in Chicago, San Jose, and Fort Worth in 2023, and % of these employees were devoted to the DI Products. *See* Hr'g Tr. (Jarosz) 599:21-600:4; CX-411C; CX-504C; CX-439C; JX-23C.8,22. Looking only at U.S. employees dedicated to ERDD for the DI Products, these U.S. employees comprise % of Motorola's global workforce, which is a significant percentage. *See* Hr'g Tr. (Jarosz) at 600:4-22. And U.S. plant investments are quantitatively significant when compared to Motorola's global plant investments. Globally, for June 20, 2023 through December 2024, Motorola spent at least $ million on plant operating expenditures. *See* Hr'g Tr. (Jarosz) at 600:23-601:13; CX-401C; CX-408C; CX-439C. Motorola's allocated plant operating expenditures in the U.S. during that time totaled $ million, accounting for % of the company's global plant investments. *See* Hr'g Tr. (Jarosz) at 600:23-601:13. Even the 103 patent, which had the smallest allocable domestic investment and no investment under subsection (B), accounted for % of global rent expenditures – a significant percentage under subsection (A).

U.S. ERDD equipment maintenance investments are also quantitatively significant when compared to Motorola's global equipment maintenance expenditures. Motorola's investments in equipment maintenance allocated to the DI Products from Jan.-Sept. 30, 2023 were $ which accounted for % of the company's global investments over that period. *See* Hr'g Tr. (Jarosz) at 601:14-602:5; CX-409C; CX-493C.2; CX-398C; CX-455C.69; CX-398C.

[redacted]

Samsung quibbles that Mr. Jarosz testified that "[redacted] percent of [Motorola's] *efforts* in the United States for Motorola are devoted to the DI products," while Mr. Chan testified that the DI Products account for roughly [redacted] percent of Motorola's total *sales*. RIB at 194-195 (emphasis added) (citing Hr'g Tr. (Jarosz) at 599:13-19). Mr. Chan's testimony that DI Product sales represent [redacted]% of Motorola's total sales nevertheless supports Mr. Jarosz's sales-based allocation methodology, and Samsung does not otherwise contest Mr. Jarosz's allocation methodology. *See* Hr'g Tr. (Chan) 71:3-73:2. In any event, Mr. Jarosz provided further support to justify an [redacted]% figure. For example, he testified that [redacted]% of Motorola's US employees are devoted to the DI Products. *See* Hr'g Tr. (Jarosz) at 599:21-600:4.

Samsung further contends that Mr. Jarosz's quantitative significance calculations improperly aggregate investments across all DI Products. *See* RIB at 195. Samsung mischaracterizes Mr. Jarosz's analysis, however, as he performed a patent-by-patent comparison for rent expenditures over the domestic industry period, and he did the same for ERDD investment comparisons:

Quantitative Significance: Plant Investments Allocated to DI Products as a % of Global Rent Expenditures ($ millions) CDX-0008C.33

	Jun. 20 – Dec. 2023 [A]	Jan. – Dec. 2024 [B]	Total [A] + [B]
Global Rent Expenditures	[redacted]		
Plant Investments Allocated to DI Products			
All Asserted Patents			
'280			
'004/'953/'241			
'103			
As a % of Global Rent Expenditures			
All Asserted Patents			
'280			
'004/'953/'241			
'103			

[redacted]

CDX-0008C.0034; *see* Hr'g Tr. (Jarosz) 601:3-602:5. Samsung further takes issue with Mr. Jarosz's analysis because he did not offer a quantitative significance opinion if less than all products meet the technical prong. *See* RIB at 195. While this would be an issue if there were a lack of representativeness regarding the technical prong, that is not the case here, and Mr. Jarosz accounted to changes in the DI Products list in any event.

On balance, then, Maxell has proven the economic prong of the domestic industry requirement under both Subsection (A) and Subsection (B), except for the 103 patent under subsection (B), where Maxell has not shown any investments.

IX. CONCLUSIONS OF LAW

1. For U.S. Patent No. 8,130,280: (1) Maxell has not proven infringement of claim 1 or claim 14; (2) Maxell has not proven that claim 1 or claim 14 are practiced by the domestic industry products; and (3) Samsung has not proven claim 1 or claim 14 invalid.

2. For U.S. Patent No. 11,490,004: (1) Maxell has proven infringement of claim 1 and claim 10; (2) Maxell has proven that claim 1 and claim 10 are practiced by the domestic industry products; and (3) Samsung has not proven claim 1 or claim 10 invalid.

3. For U.S. Patent No. 12,108,103: (1) Maxell has not proven infringement of claim 1; (2) Maxell has not proven that claim 1 is practiced by the domestic industry products; and (3) Samsung has not proven claim 1 invalid.

4. For U.S. Patent No. 11,509,953: (1) Maxell has proven infringement of claim 9 but not of claims 2 or 30; (2) Maxell has not proven that claims 2, 9, or 30 are practiced by the domestic industry products; and (3) Samsung has not proven claims 2, 9, or 30 invalid.

5. For U.S. Patent No. 11,445,241: (1) Maxell has not proven infringement of claims 5, 7, 15, or 28; (2) Maxell has not proven that claims 5, 7, 15, or 28 are practiced by the domestic industry products; and (3) Samsung has not proven claims 5, 7, 15, or 28 are invalid.

6. Maxell has proven the existence of an economic domestic industry as required by 19 U.S.C. § 1337(a)(2) for U.S. Patent Nos. 8,130,280, 11,490,004, 12,108,103, 11,509,953, and 11,445,241.

7. There is no proven violation of section 337 with respect to U.S. Patent Nos. 8,130,280, 12,108,103, 11,509,953, or 11,445,241.

8. A violation of Section 337 has been shown with respect to U.S. Patent No. 11,490,004.

X. RECOMMENDED DETERMINATION ON REMEDY AND BOND

The Commission's Rules provide that subsequent to an initial determination on the question of violation of section 337 of the Tariff Act of 1930, as amended, 19 U.S.C. § 1337, the administrative law judge shall issue a recommended determination concerning the appropriate remedy in the event that the Commission finds a violation of section 337, and the amount of bond to be posted during Presidential review of the Commission action under section 337(j). *See* 19 C.F.R. § 210.42(a)(1)(ii).

The Commission has broad discretion in selecting the form, scope, and extent of the remedy in a section 337 proceeding. *Viscofan, S.A. v. Int'l Trade Comm'n*, 787 F.2d 544, 548 (Fed. Cir. 1986). Under Section 337(d)(1), if the Commission determines as a result of an investigation that there is a violation of section 337, the Commission is authorized to enter either a limited or a general exclusion order. 19 U.S.C. § 1337(d)(1). A limited exclusion order ("LEO") instructs the U.S. Customs and Border Protection ("CBP") to exclude from entry all articles that are covered by the patent at issue and that originate from a named respondent in the investigation. Under section 337(f)(1), the Commission may issue a cease and desist order ("CDO") in addition to, or instead of, an exclusion order. 19 U.S.C. § 1337(f)(1). The Commission generally issues a cease and desist order directed to a domestic respondent when there is a "commercially significant" amount of infringing, imported product in the United States that could be sold, thereby undercutting the remedy provided by an exclusion order. *See Certain Crystalline Cefadroxil Monohydrate*, Inv. No. 337-TA-293, USITC Pub. 2391, Comm'n Op. on Remedy, the Public Interest and Bonding at 37-42 (June 1991); *Certain Condensers, Parts Thereof and Prods.*

Containing Same, Including Air Conditioners for Automobiles, Inv. No. 337-TA-334 (Remand), Comm'n Op. at 26-28 (Sept. 10, 1997). Additionally, during the 60-day period of Presidential review under 19 U.S.C. § 1337(j), "articles directed to be excluded from entry under subsection (d) . . . shall . . . be entitled to entry under bond prescribed by the Secretary in an amount determined by the Commission to be sufficient to protect the complainant from any injury." *See* 19 U.S.C. § 1337(j)(3).

Maxell seeks a limited exclusion order, a cease and desist order, and a bond of either 100% or [redacted]% of revenues. *See* CIB at 196-200. Complainant bears the burden to prove cease and desist orders are warranted. *Certain Microfluidic Devices*, Inv. No. 337-TA-1068, Comm'n Op. at 23 (Jan. 10, 2020). "The complainant bears the burden of establishing the need for a bond" during the Presidential Review period. *See Certain Robotic Vacuum Cleaning Devices and Components Thereof Such as Spare Parts*, Inv. No. 337-TA-1057, Comm'n Op. at 68 (Feb. 1, 2019).

As to a limited exclusion order, Samsung argues for a certification provision, which is a "general practice" with Commission exclusion orders and is accordingly recommended. *Certain Plant-Derived Serum Albumins ("rHSA") and Products Containing the Same*, Inv. No. 337-TA-1238, Comm'n Op. at 62-63 (October 11, 2022); *see* RIB at 196-97. Samsung further argues that "any LEO must carve out its product group," which is not a general practice with Commission exclusion orders. RIB at 196; *e.g.*, *Certain Composite Aerogel Insulation Materials and Methods for Manufacturing the Same*, Inv. No. 337-TA-1003, Comm'n Op. at 64 (Feb. 22, 2018). More to the point, the only proven infringement is of the 004 patent, and the parties stipulated that the S25 is representative of all products accused of infringing it, so there is no product group to carve out. A standard limited exclusion order is therefore recommended.

[redacted]

Samsung also argues for a service, warranty, and repair exemption. *See* RIB at 197. The Commission recently clarified that such an exemption "should be considered by the ALJ when presented by the parties," even if the public interest has not been delegated. *Certain Photovoltaic Trunk Bus Cable Assemblies and Components Thereof*, Inv. No. 337-TA-1438, Comm'n Op. at 27 (June 25, 2026) (confidential). For two reasons, a qualified exemption is recommended. First, Maxell generally does not oppose one. *See* CRB at 122. Maxell does seek limitations on any exemption similar to those provided in *Certain Fitness Devices, Streaming Components Thereof, and Systems Containing Same*, Inv. No. 337-TA-1265, Comm'n Op. at 89-92 (Mar. 23, 2023) ("*Fitness Devices*") (exemption should not extend to devices purchased after issuance of the remedial orders), and *Certain Light-Based Physiological Measurement Devices and Components Thereof*, Inv. No. 337-TA-1276, Comm'n Op. at 106 (Nov. 14, 2023) (exemption should not extend to devices outside the warranty scope). *See id*. Such limitations are reasonable and are recommended. Maxell further seeks a certification provision "including warranty/repair language," which appears to be part of the standard certification language and is accordingly recommended. *See Certain Wet Dry Surface Cleaning Devices*, Inv. No. 337-TA-1304, Comm'n Op. at 89 (Jan. 8, 2023). Second, Samsung has a standard one-year warranty at least for the S23 (*see* RX-4640 at 1) and S25 (*see* RX-4639 at 22), and a longer paid warranty seemingly for all Accused Products (*see generally* RX-4641), and it would be inequitable to deny the benefit of such warranties to existing customers. *See Fitness Devices* at 89-92.

As to a cease and desist order, it is surely more likely than not that Samsung has significant domestic operations, and Mr. Jarosz testified that as of March 2025 Samsung's inventory was [redacted] units worth [redacted], which Samsung does not dispute, and which is clearly commercially significant. *See* Hr'g Tr. (Jarosz) at 602:18-603:2; RIB at 196-97. Therefore, should

[redacted]

a violation be found, it is recommended that the Commission issue standard cease and desist orders.

As to a bond, the parties' arguments have been fully considered and it is clear that no bond is justified. *See* CIB at 198-200; RIB at 197-99. The two most important facts are that Maxell will not be directly harmed from a 0% bond because its [redacted], and that Motorola's products are generally less expensive than Samsung's. *See* Hr'g Tr. (Jarosz) at 604:1-606:18. So even assuming that Samsung's competition will directly harm non-party licensee Motorola and indirectly harm Maxell, Samsung's higher prices weigh heavily against a bond. *See Certain Magnetic Data Storage Tapes and Cartridges Containing the Same (II)*, Inv. No. 337-TA-1076, Comm'n Op. at 67 (June 20, 2019). Therefore, no bond is recommended.

XI. INITIAL DETERMINATION AND ORDER

Based on the foregoing,[4] it is my Initial Determination that there is a violation of Section 337 of the Tariff Act of 1930, as amended, 19 U.S.C. § 1337, in the importation into the United States, the sale for importation, or the sale within the United States after importation of certain mobile electronic devices in connection with the asserted claims of U.S. Patent No. 11,490,004. There is no such violation in connection with the asserted claims of U.S. Patent Nos. 8,130,280, 12,108,103, 11,509,953, or 11,445,241.

The undersigned hereby certifies to the Commission this Initial Determination, together with the Record of the hearing in this investigation consisting of the following: the transcript of

[4] The failure to discuss any matter raised by the parties or any portion of the Record herein does not indicate that said matter was not considered. Rather, any such matter(s) or portion(s) of the Record has/have been determined to be irrelevant, immaterial or meritless. Arguments made on brief which were otherwise unsupported by Record evidence or legal precedent have been accorded no weight.

the evidentiary hearing, with appropriate corrections as may hereafter be ordered; and the exhibits accepted into evidence in this investigation.[5]

Pursuant to 19 C.F.R. § 210.42(h), this Initial Determination shall become the determination of the Commission sixty (60) days after the date of service of the Initial Determination, unless a party files a petition for review of the Initial Determination within twelve (12) days after service of the Initial Determination pursuant to 19 C.F.R. § 210.43(a) or the Commission, pursuant to 19 C.F.R. § 210.44, orders on its own motion, a review of the Initial Determination or certain issues therein. Any issue or argument not raised in a petition for review, or response thereto, will be deemed to have been abandoned and may be disregarded by the Commission in reviewing the Initial Determination pursuant to 19 C.F.R. § 210.43(b) and (c).

[5] The pleadings of the parties filed with the Secretary need not be certified as they are already in the Commission's possession in accordance with Commission rules.

[redacted]

Confidentiality Notice:

This Initial Determination is being issued as confidential, and a public version will be issued pursuant to Commission Rule 210.5(f). Within seven (7) days of the date of this Initial Determination, the parties shall jointly submit: (1) a proposed public version of this opinion with any proposed redactions bracketed in red; and (2) a written justification for any proposed redactions specifically explaining why the piece of information sought to be redacted is confidential and why disclosure of the information would be likely to cause substantial harm or likely to have the effect of impairing the Commission's ability to obtain such information as is necessary to perform its statutory functions.[6]

SO ORDERED.

Cameron Elliot
Administrative Law Judge

[6] Under Commission Rules 210.5 and 201.6(a), confidential business information includes: information which concerns or relates to the trade secrets, processes, operations, style of works, or apparatus, or to the production, sales, shipments, purchases, transfers, identification of customers, inventories, or amount or source of any income, profits, losses, or expenditures of any person, firm, partnership, corporation, or other organization, or other information of commercial value, the disclosure of which is likely to have the effect of either impairing the Commission's ability to obtain such information as is necessary to perform its statutory functions, or causing substantial harm to the competitive position of the person, firm, partnership, corporation, or other organization from which the information was obtained, unless the Commission is required by law to disclose such information. *See* 19 C.F.R. § 201.6(a). Thus, to constitute confidential business information the disclosure of the information sought to be designated confidential must likely have the effect of either: (1) impairing the Commission's ability to obtain such information as is necessary to perform its statutory functions; or (2) causing substantial harm to the competitive position of the person, firm, partnership, corporation, or other organization from which the information was obtained.

CERTIFICATE OF SERVICE

I, Lisa R. Barton, hereby certify that the parties listed have entered an appearance in the above captioned investigation, and a copy of the PUBLIC CERTIFICATE OF SERVICE was served upon the following parties via first class mail and air mail where necessary.

Document	Security	Document Type	Official Rec'd	Title
886683	Confidential	ID/RD - Final on Violation	07/01/2026 09:29 AM	Initial Determination on Violation of Section 337 and Recommended Determination on Remedy and Bond

Service Date: July 01, 2026

/s

Lisa R. Barton
U.S. International Trade Commission
500 E Street, S.W.
Suite 112
Washington, D.C. 20436

CERTIFICATE OF SERVICE

On behalf of Complainant Maxell, Ltd.:

Jamie B. Beaber, Lead Representative
Mayer Brown LLP
1999 K Street, N.W.
Washington, District of Columbia 20006, United States

202-263-3000 -- voice
jbeaber@mayerbrown.com
Electronic Service

On behalf of Respondent Samsung Electronics America, Inc.;Samsung Electronics Co., Ltd.:

Sean Cunningham, Lead Representative
DLA Piper LLP (US)
4365 Executive Drive
Suite 1100
San Diego, California 92121, United States
619.699.2900 -- voice
202-223-2085 -- fax
sean.cunningham@dlapiper.com
Electronic Service