US010658378B2

(12) **United States Patent**
Tao et al.

(10) **Patent No.: US 10,658,378 B2**
(45) **Date of Patent: May 19, 2020**

(54) **THROUGH ARRAY CONTACT (TAC) FOR THREE-DIMENSIONAL MEMORY DEVICES**

(71) Applicant: **Yangtze Memory Technologies Co., Ltd.**, Wuhan, Hubei (CN)

(72) Inventors: **Qian Tao**, Hubei (CN); **Yushi Hu**, Hubei (CN); **Zhenyu Lu**, Hubei (CN); **Li Hong Xiao**, Hubei (CN); **Xiaowang Dai**, Hubei (CN); **Yu Ting Zhou**, Hubei (CN); **Zhao Hui Tang**, Hubei (CN); **Mei Lan Guo**, Hubei (CN); **ZhiWu Tang**, Hubei (CN); **Qinxiang Wei**, Hubei (CN); **Qianbing Xu**, Hubei (CN); **Sha Sha Liu**, Hubei (CN); **Jian Hua Sun**, Hubei (CN); **Enbo Wang**, Hubei (CN)

(73) Assignee: **Yangtze Memory Technologies Co., Ltd.**, Wuhan (CN)

(*) Notice: Subject to any disclaimer, the term of this patent is extended or adjusted under 35 U.S.C. 154(b) by 0 days.

(21) Appl. No.: **16/047,182**

(22) Filed: **Jul. 27, 2018**

(65) **Prior Publication Data**

US 2019/0341399 A1 Nov. 7, 2019

Related U.S. Application Data

(63) Continuation of application No. PCT/CN2018/085421, filed on May 3, 2018.

(51) **Int. Cl.**
H01L 29/76 (2006.01)
H01L 27/11582 (2017.01)
(Continued)

(52) **U.S. Cl.**
CPC .. ***H01L 27/11582*** (2013.01); ***H01L 21/76802*** (2013.01); ***H01L 21/76831*** (2013.01);
(Continued)

(58) **Field of Classification Search**
None
See application file for complete search history.

(56) **References Cited**

U.S. PATENT DOCUMENTS

8,247,895 B2 8/2012 Haensch et al.
9,530,789 B2 12/2016 Lee et al.
(Continued)

FOREIGN PATENT DOCUMENTS

CN 105047668 A 11/2015
CN 105826323 A 8/2016
(Continued)

OTHER PUBLICATIONS

International Search Report and Written Opinion of the International Searching Authority directed to related International Patent Application No. PCT/CN2018/085421, dated Jan. 20, 2019; 9 pages.

Primary Examiner — Calvin Y Choi
(74) *Attorney, Agent, or Firm* — Sterne, Kessler, Goldstein & Fox P.L.L.C.

(57) **ABSTRACT**

Embodiments of interconnect structures of a three-dimensional (3D) memory device and method for forming the interconnect structures are disclosed. In an example, a 3D NAND memory device includes a semiconductor substrate, an alternating layer stack disposed on the semiconductor substrate, and a dielectric structure, which extends vertically through the alternating layer stack, on an isolation region of the substrate. Further, the alternating layer stack abuts a sidewall surface of the dielectric structure and the dielectric structure is formed of a dielectric material. The 3D memory device additionally includes one or more through array contacts that extend vertically through the dielectric structure and the isolation region, and one or more channel structures that extend vertically through the alternating layer stack.

20 Claims, 15 Drawing Sheets

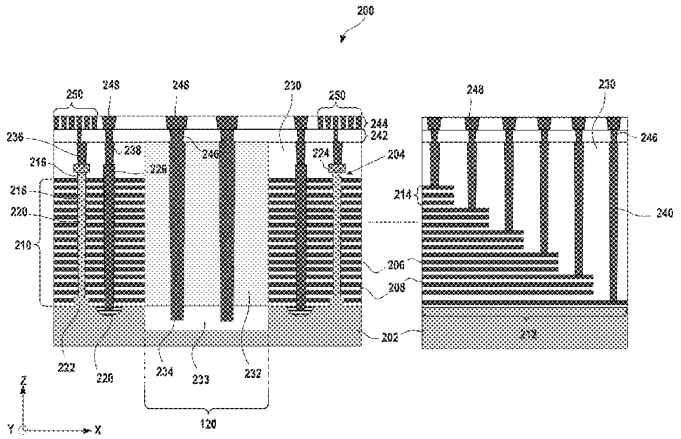

(51) **Int. Cl.**

H01L 21/768	(2006.01)
H01L 23/522	(2006.01)
H01L 27/11565	(2017.01)
H01L 27/1157	(2017.01)

(52) **U.S. Cl.**
CPC ***H01L 21/76877*** (2013.01); ***H01L 23/5226*** (2013.01); ***H01L 27/1157*** (2013.01); ***H01L 27/11565*** (2013.01)

(56) **References Cited**

U.S. PATENT DOCUMENTS

9,595,531	B2	3/2017	Zhu et al.	
9,595,667	B2	3/2017	Pio	
9,620,512	B1 *	4/2017	Nishikawa	H01L 27/11524
2016/0056188	A1 *	2/2016	Lee	H01L 27/1463 257/446
2016/0071861	A1	3/2016	Serov et al.	
2017/0179026	A1	6/2017	Toyama et al.	
2017/0186758	A1	6/2017	Lee et al.	
2017/0358593	A1	12/2017	Yu et al.	
2019/0057974	A1	2/2019	Lu et al.	

FOREIGN PATENT DOCUMENTS

CN	106910746	A	6/2017
CN	106920794	A	7/2017
CN	107887395	A	4/2018
TW	201419449	A	5/2014
TW	201606388	A	2/2016
TW	201721921	A	6/2017
WO	WO 2019/104896	A1	6/2019

* cited by examiner

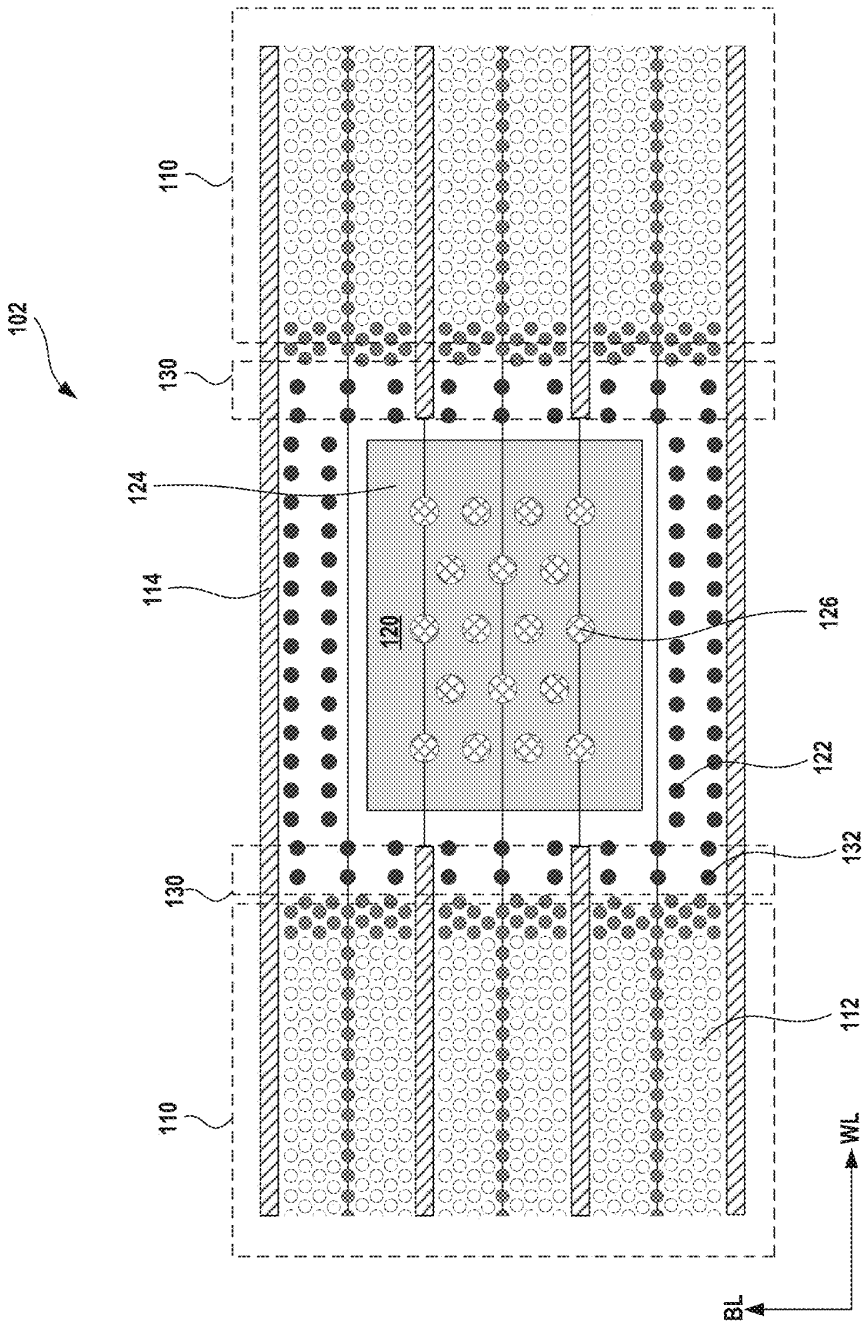

FIG. 1A

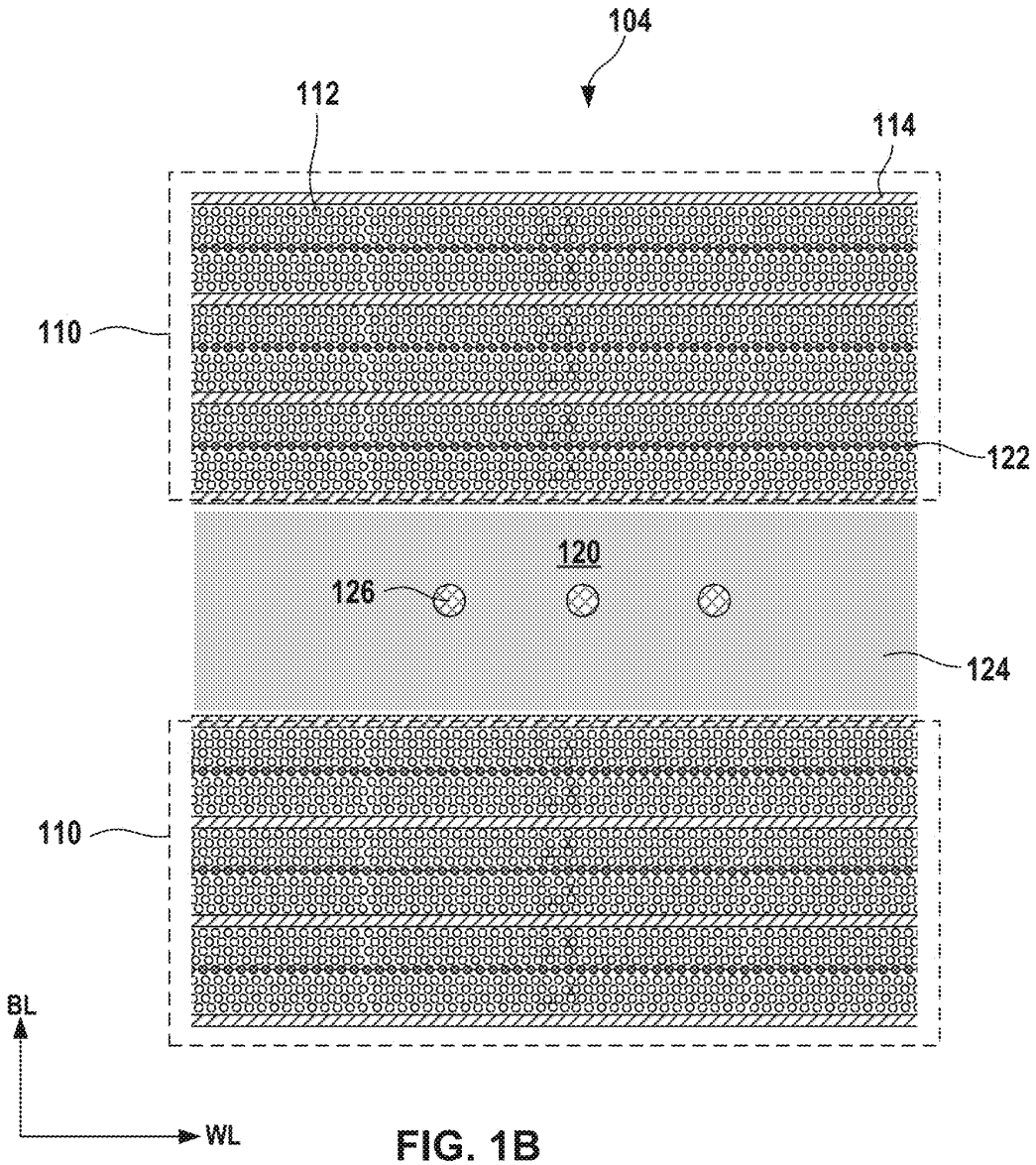

FIG. 1B

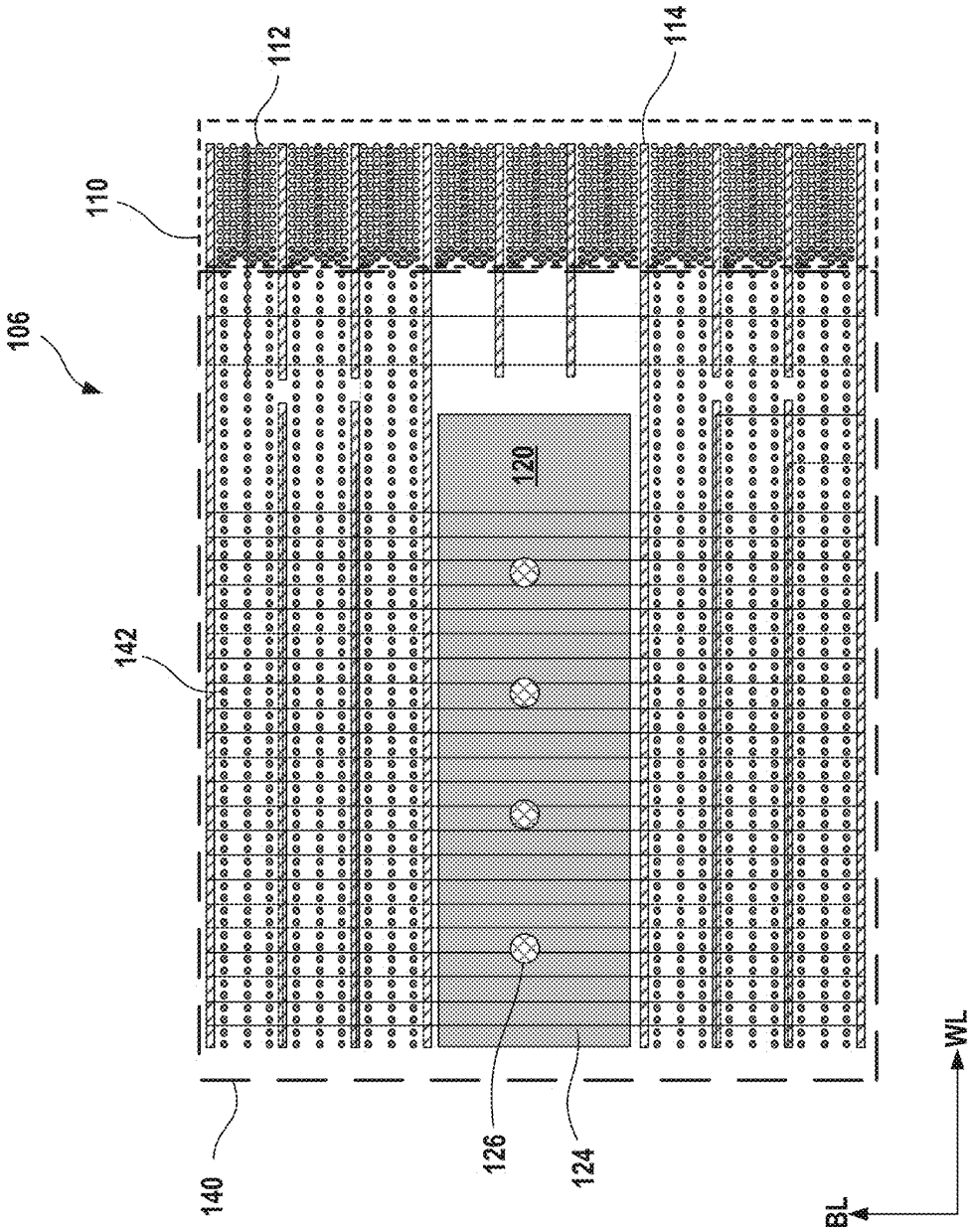

FIG. 1C

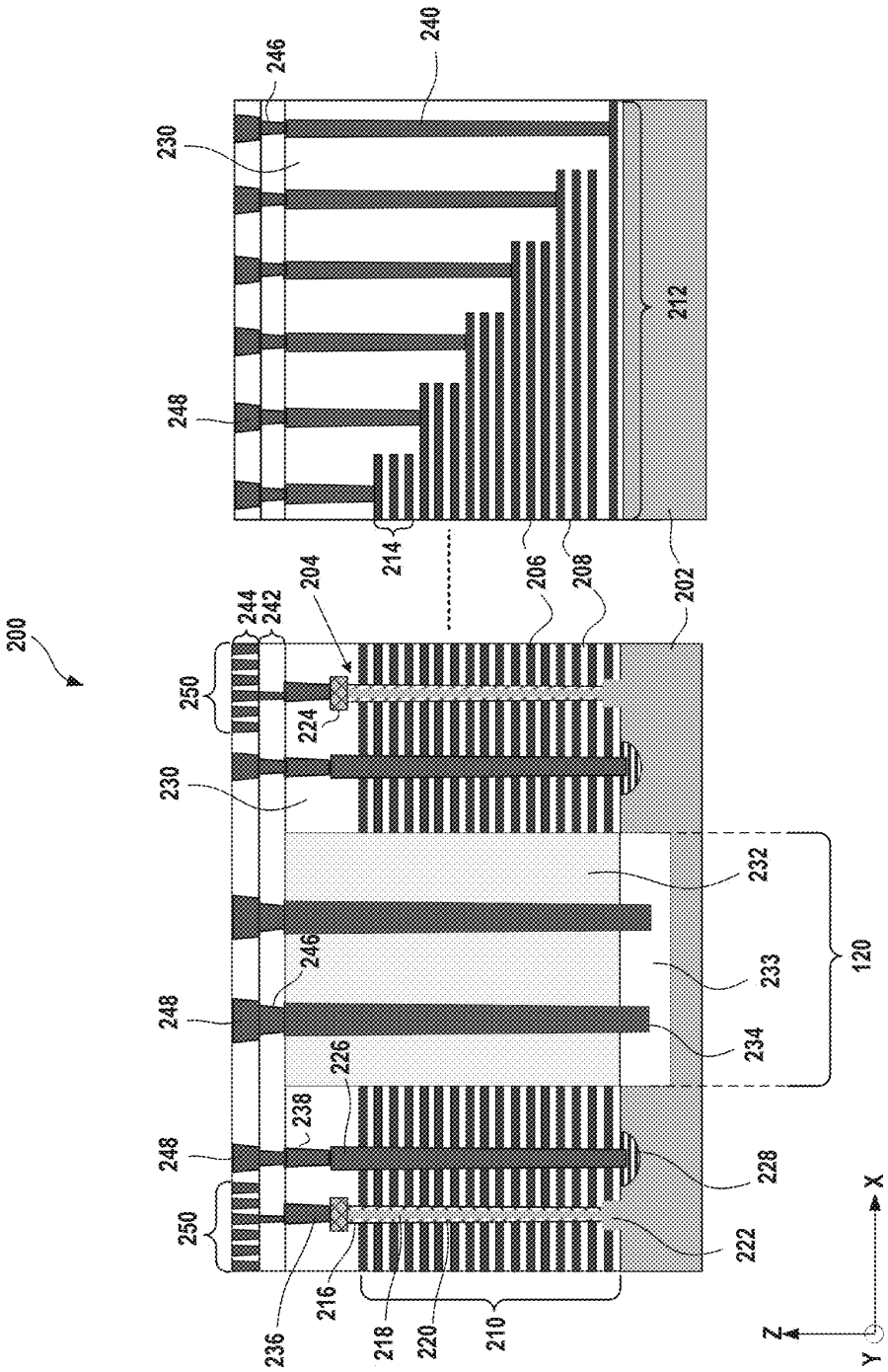
200
240
246
230
248
212
214
206
208
202
204
244
242
250
224
232
233
120
234
226
238
228
222
216
236
218
220
210
X
Z
Y

FIG. 2

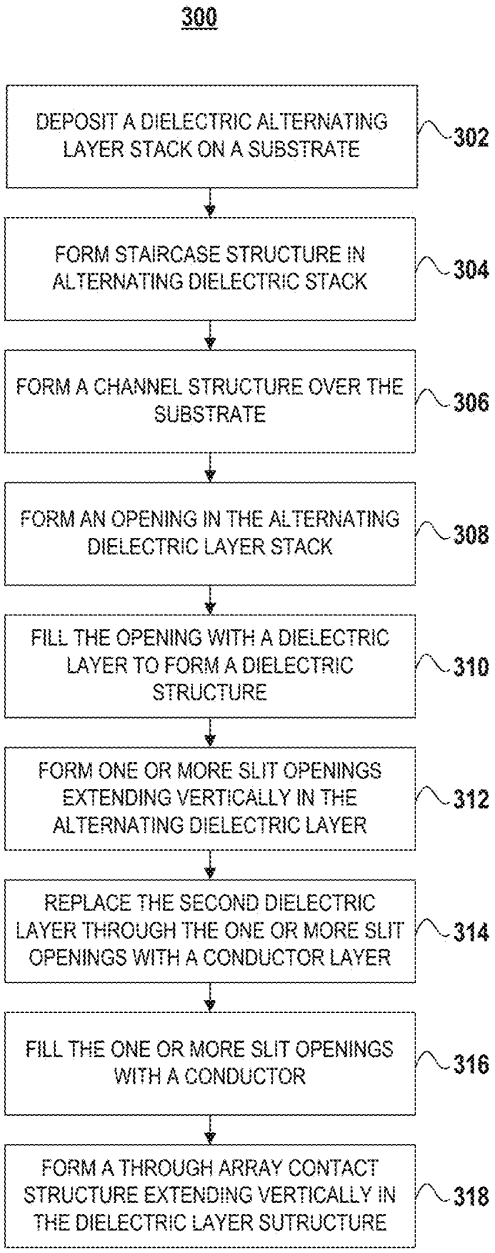
300
DEPOSIT A DIELECTRIC ALTERNATING LAYER STACK ON A SUBSTRATE
302
FORM STAIRCASE STRUCTURE IN ALTERNATING DIELECTRIC STACK
304
FORM A CHANNEL STRUCTURE OVER THE SUBSTRATE
306
FORM AN OPENING IN THE ALTERNATING DIELECTRIC LAYER STACK
308
FILL THE OPENING WITH A DIELECTRIC LAYER TO FORM A DIELECTRIC STRUCTURE
310
FORM ONE OR MORE SLIT OPENINGS EXTENDING VERTICALLY IN THE ALTERNATING DIELECTRIC LAYER
312
REPLACE THE SECOND DIELECTRIC LAYER THROUGH THE ONE OR MORE SLIT OPENINGS WITH A CONDUCTOR LAYER
314
FILL THE ONE OR MORE SLIT OPENINGS WITH A CONDUCTOR
316
FORM A THROUGH ARRAY CONTACT STRUCTURE EXTENDING VERTICALLY IN THE DIELECTRIC LAYER SUTRUCTURE
318

FIG. 3

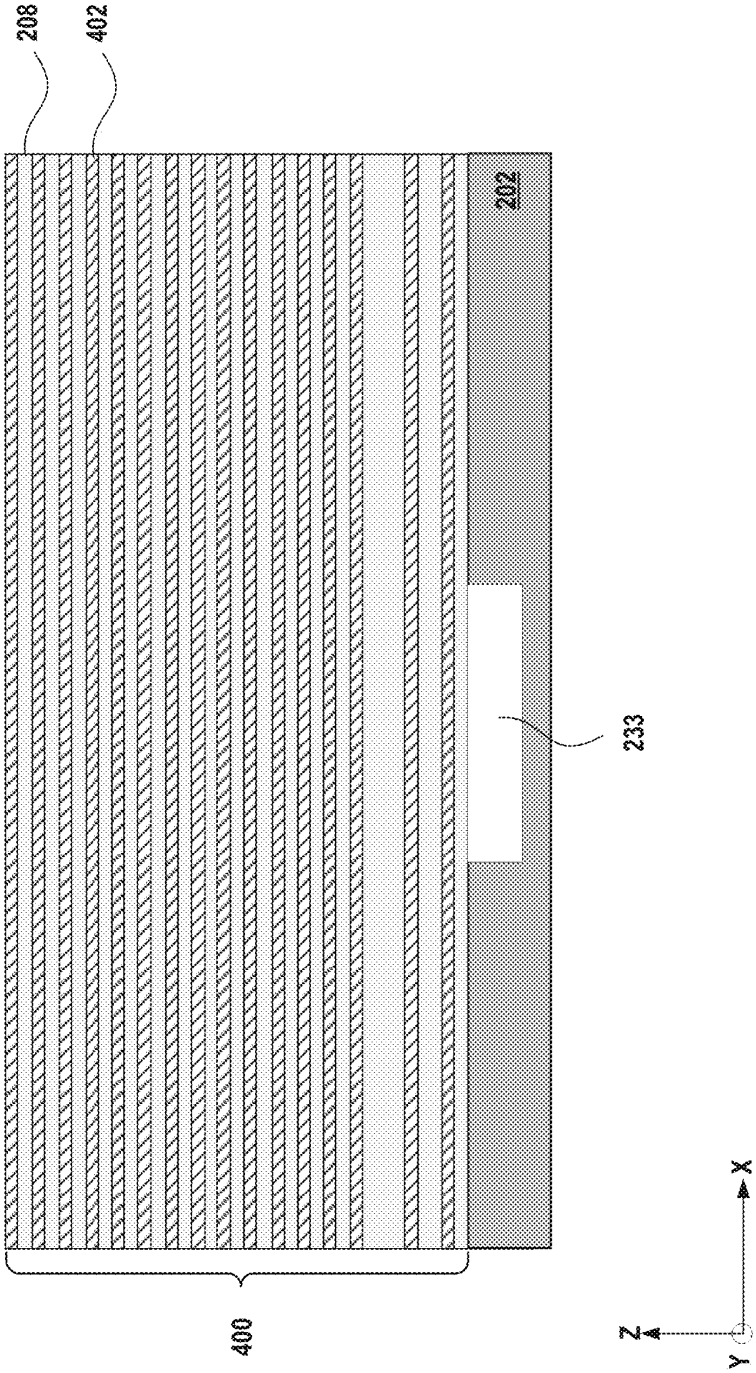

FIG. 4

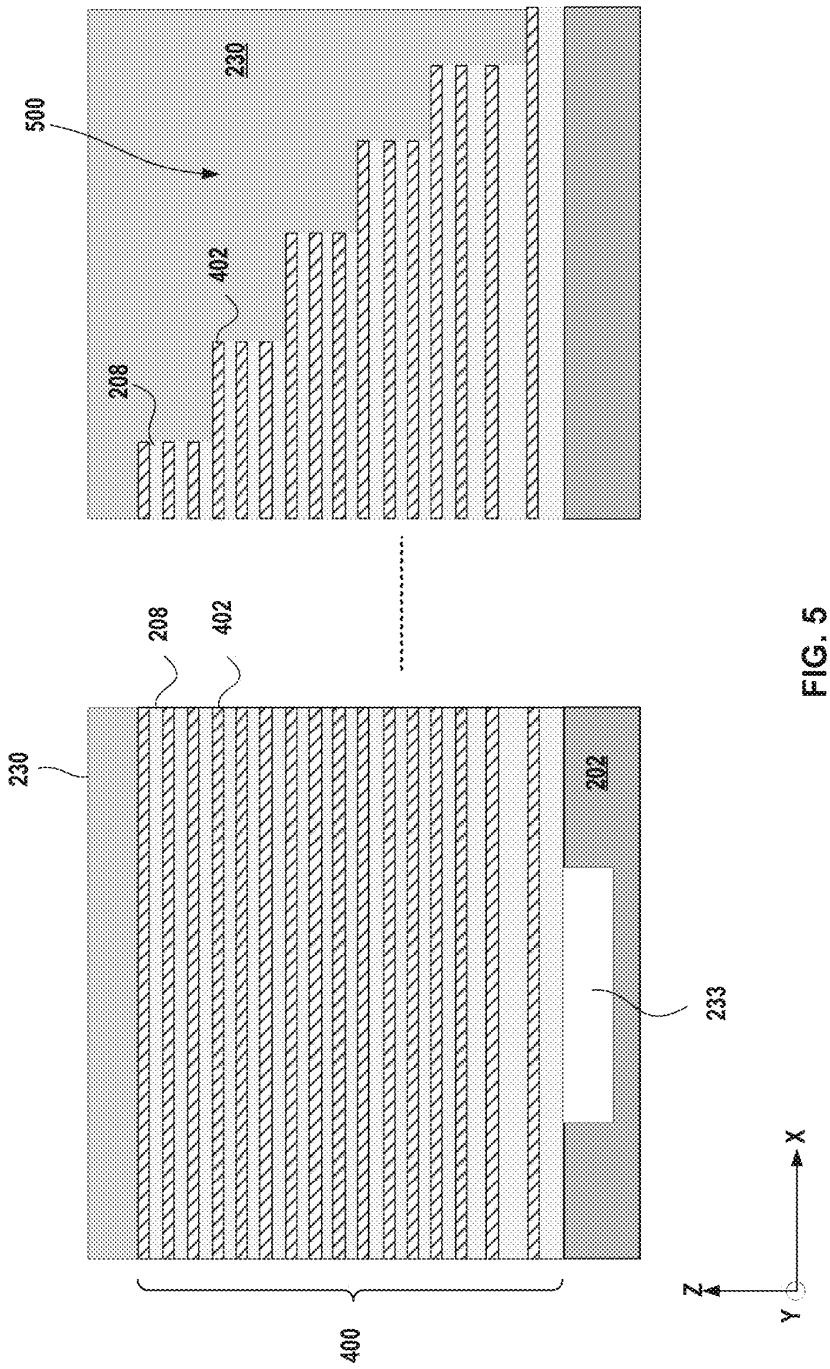

FIG. 5

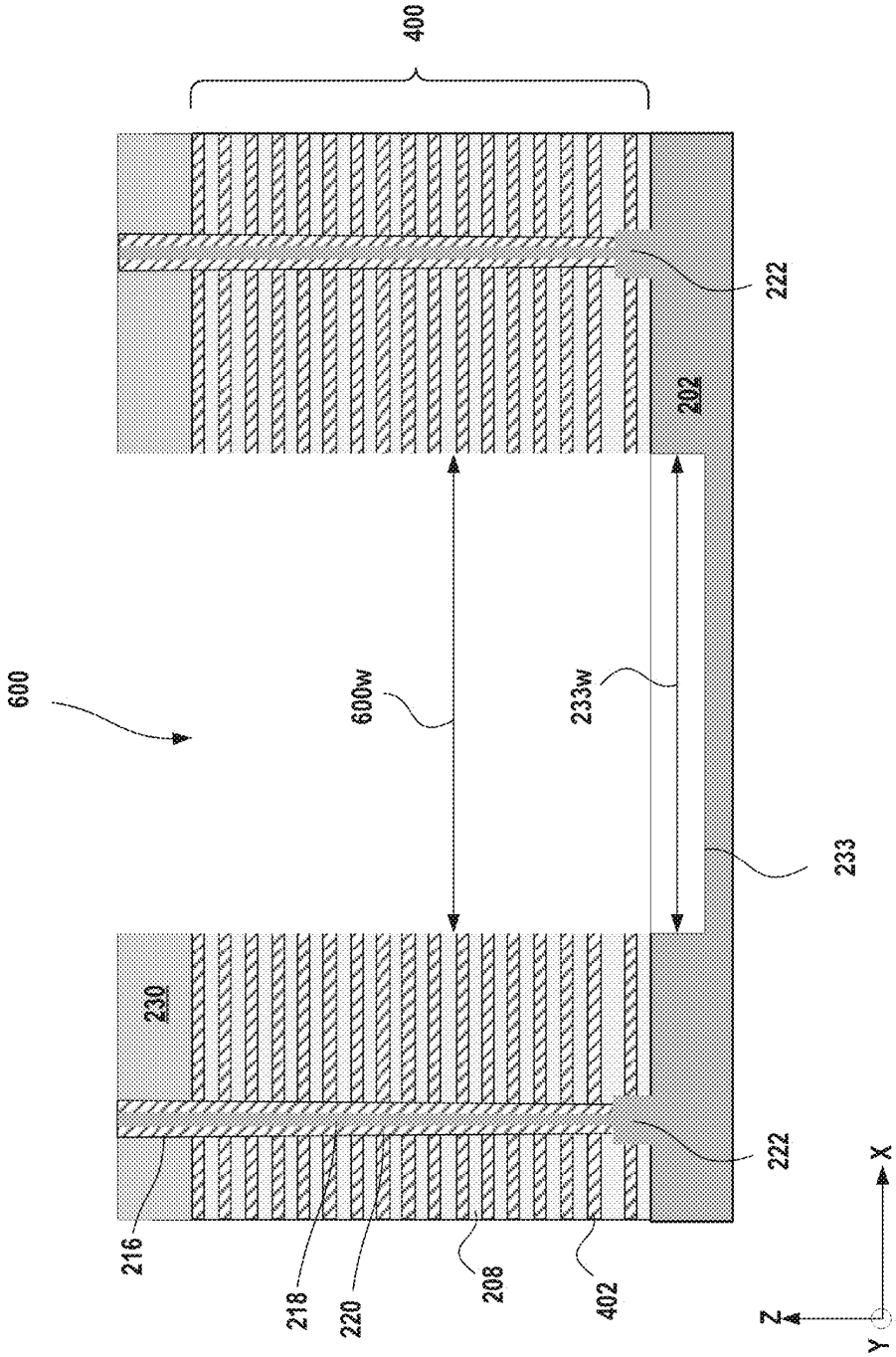

FIG. 6

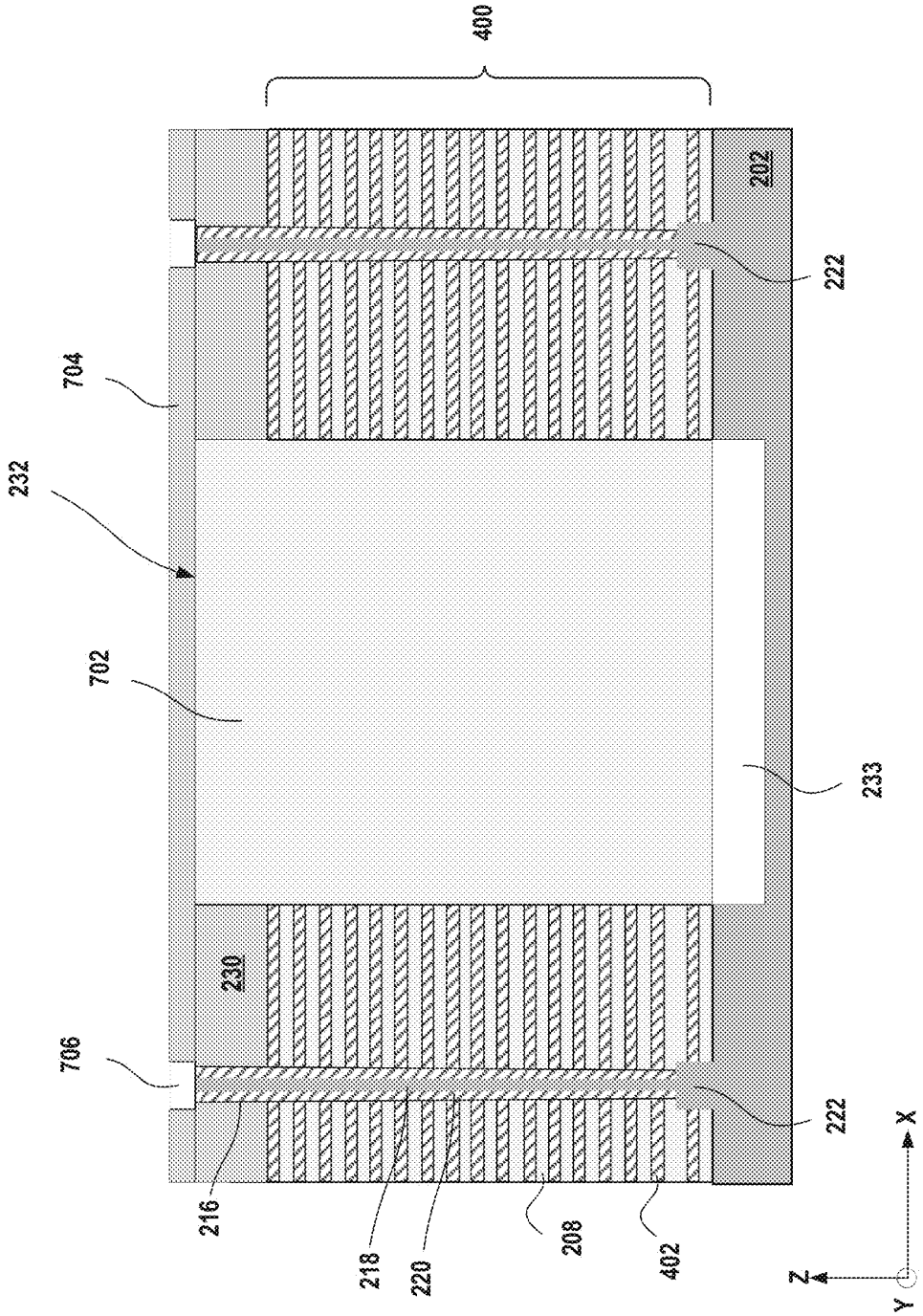

FIG. 7

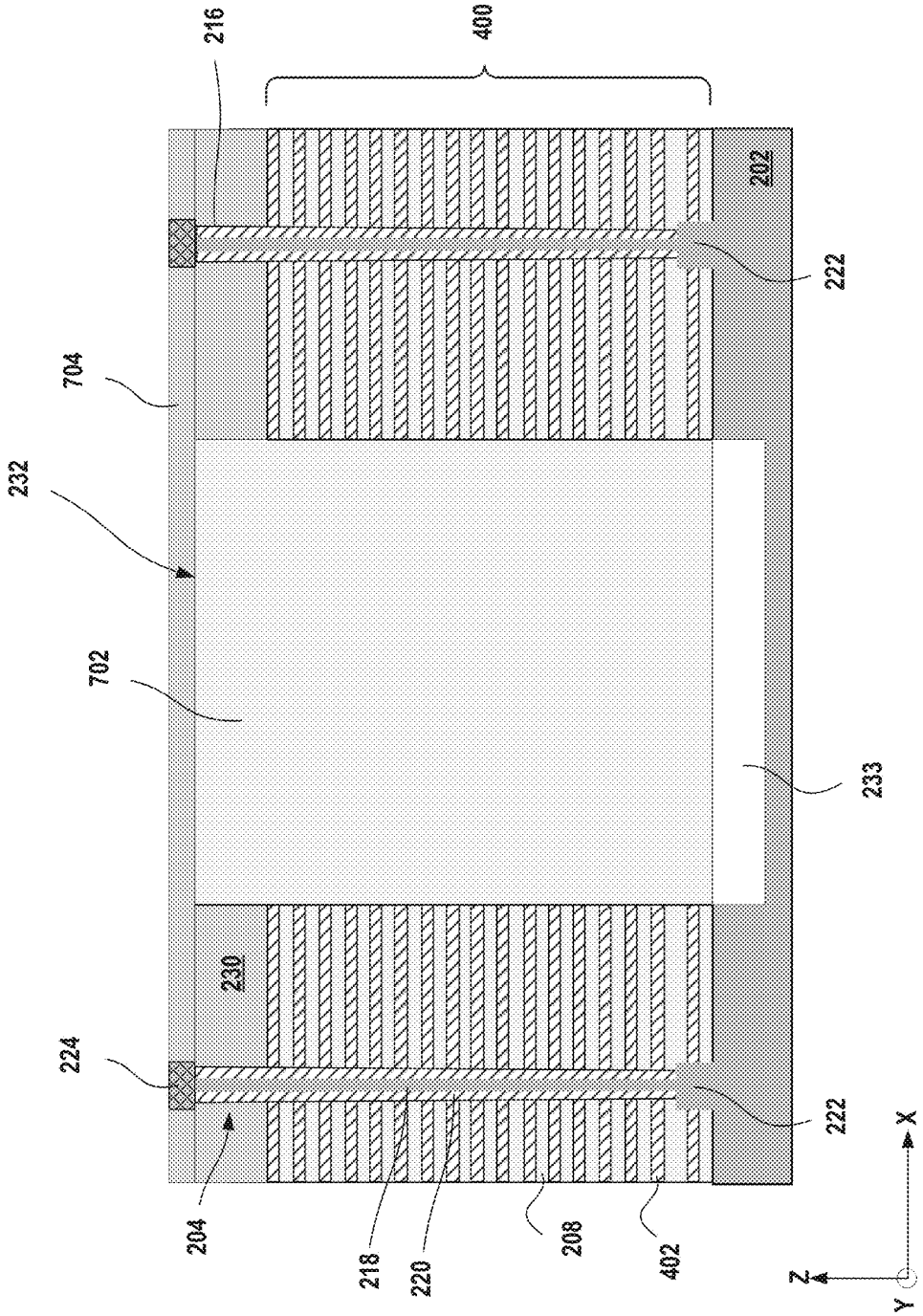
216
400
202
222
704
232
702
233
230
224
222
204
218
220
208
402
Z
X
Y

FIG. 8

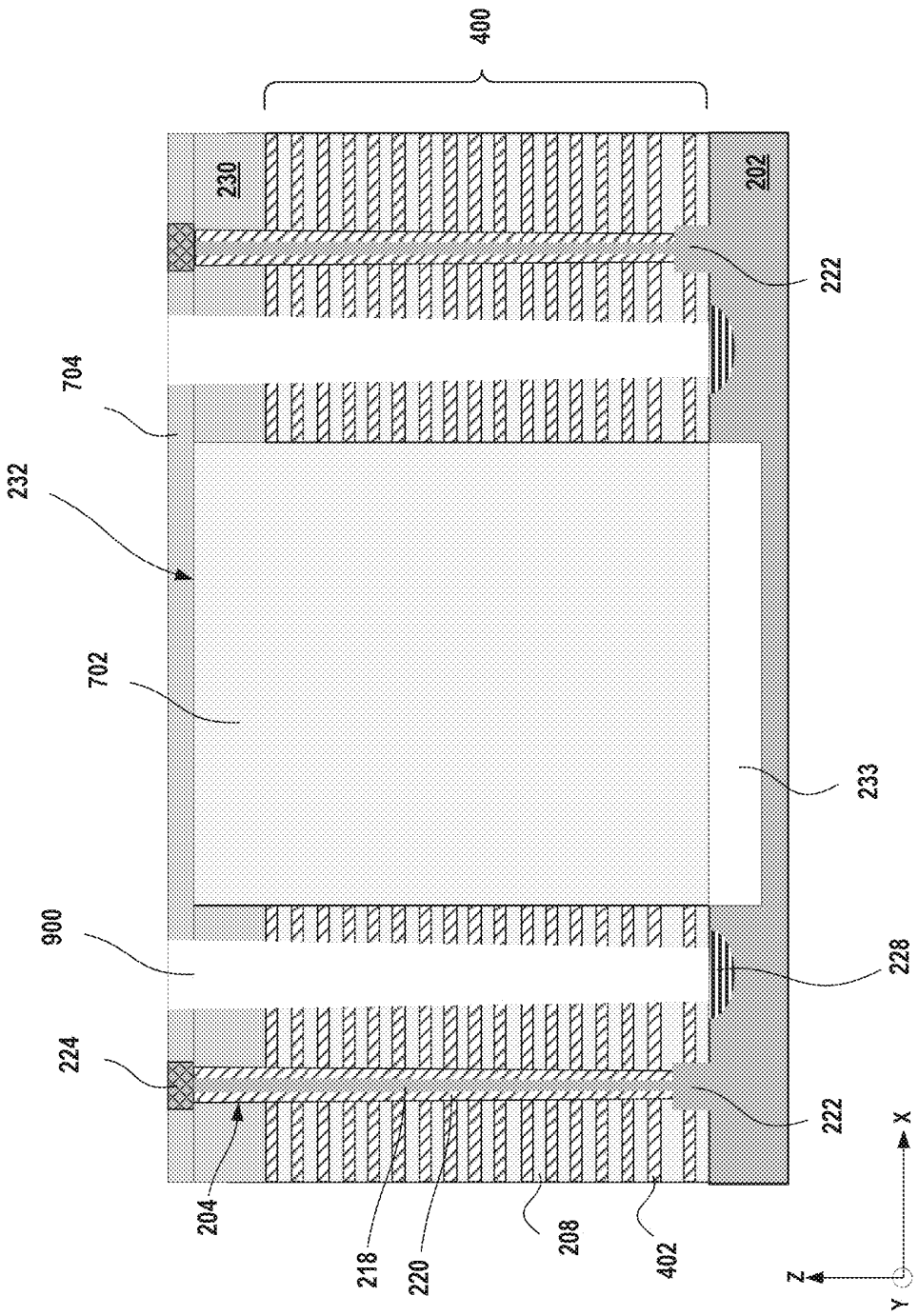
400
230
202
222
704
232
702
233
900
228
224
222
204
218
220
208
402
X
Z
Y

FIG. 9

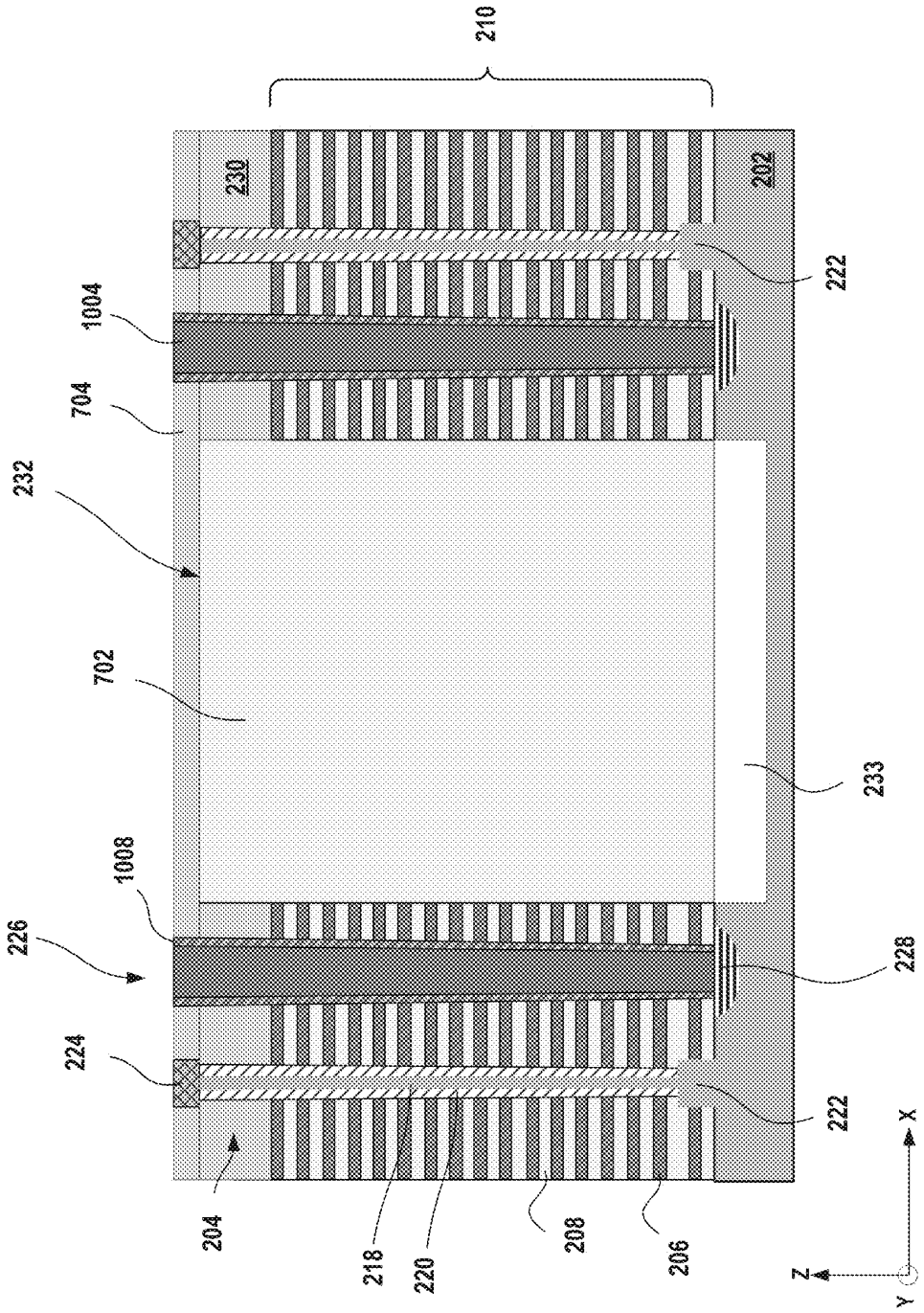
210
230
202
222
1004
704
232
702
233
1008
226
228
224
222
204
218
220
208
206
Z
X
Y

FIG. 10

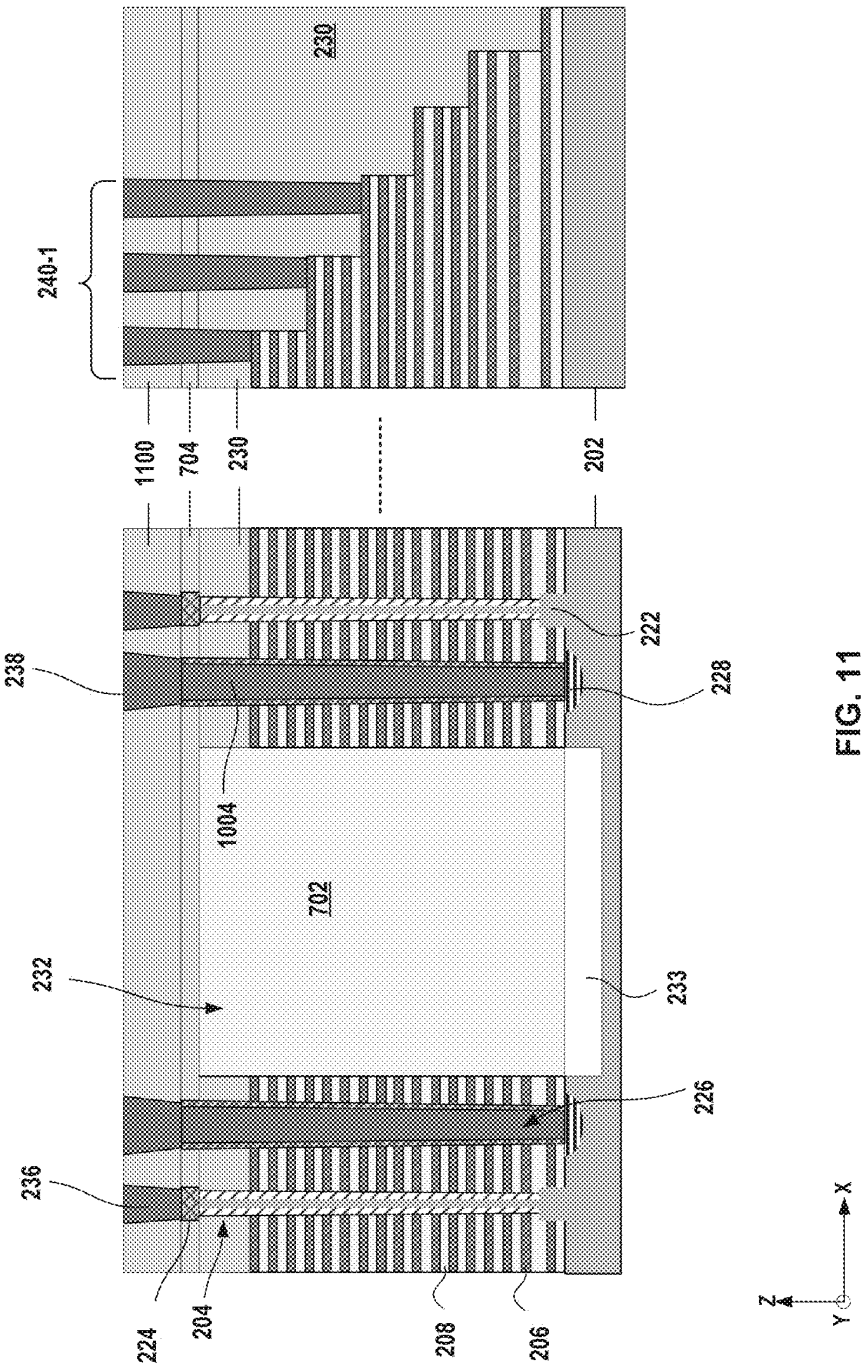
230
240-1
1100
704
230
202
222
238
228
1004
702
232
233
226
236
224
204
208
206
Z
X
Y

FIG. 11

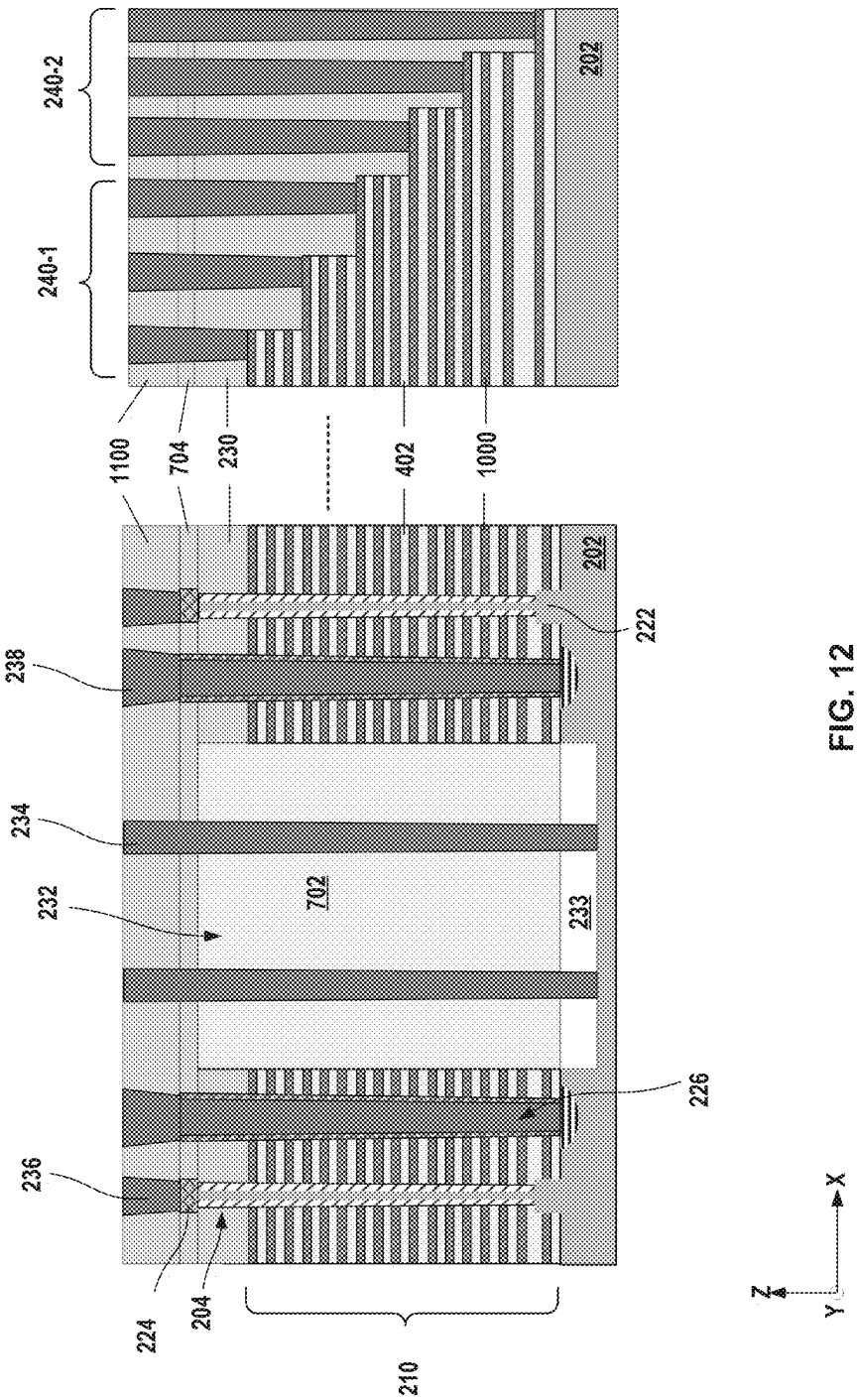
240-2
240-1
202
1100
704
230
402
1000
202
222
238
234
232
702
233
226
236
224
204
210
Z
X
Y

FIG. 12

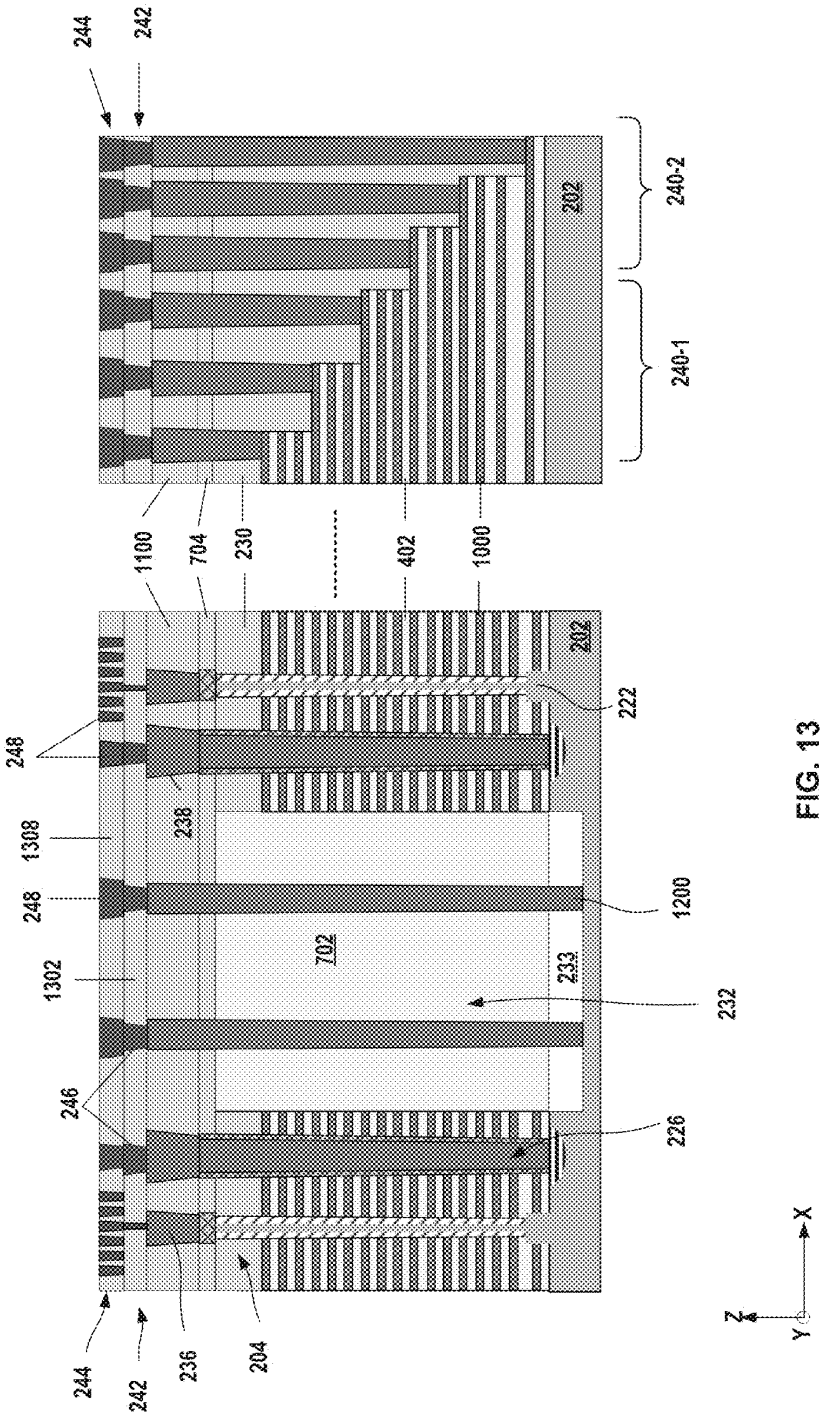
244
242
240-2
240-1
202
1100
704
230
402
1000
222
248
238
1308
1200
702
233
1302
232
246
226
236
204
X
Z
Y

FIG. 13

THROUGH ARRAY CONTACT (TAC) FOR THREE-DIMENSIONAL MEMORY DEVICES

CROSS-REFERENCES TO RELATED APPLICATIONS

This application claims the priority of PCT Patent Application No. PCT/CN2018/085421 filed on May 3, 2018, the entire content of which is incorporated herein by reference.

TECHNICAL FIELD

The present disclosure generally relates to the field of semiconductor technology, and more particularly, to a channel hole plug structure of three-dimensional (3D) memory devices and a method for forming the same.

BACKGROUND

Planar memory cells have been continuously scaled down from one technology generation to the next by improvements in circuit design, fabrication integration, and fabrication process. However, as the feature sizes of the memory cells continuously shrink, the density for planar memory cells increases. Consequently, the fabrication techniques can become challenging and costly.

A three-dimensional (3D) memory architecture (e.g., planar memory cells stacked on top of each other) can address the density limitation of planar memory cells. The 3D memory architecture includes a memory array and peripheral devices for controlling signals to and from the memory array.

BRIEF SUMMARY

Embodiments of 3D memory and fabrication methods thereof are disclosed herein.

According to some embodiments of the present disclosure, a 3D NAND memory device includes an alternating layer stack with a staircase structure and one or more dielectric structures surrounded by the alternating layer stack. The alternating layer stack can include a stack of alternating conductor and dielectric layers, and the dielectric structures can include a single dielectric layer. The memory device further includes multiple vertical structures that extend vertically through the alternating conductor/dielectric stack, and multiple vertical structures that extend vertically through the dielectric structures. By way of example and not limitation, vertical structures extending vertically through the alternating conductor/dielectric stack can include "channel" structures and "slit" structures. Vertical structures extending vertically through the dielectric structures can include through array contact structures, referred to herein as "through array contacts" ("TAC" structures or "TACs").

Additional elements of the 3D NAND memory device can include an etch stop layer disposed on each channel structure and a first contact layer with a plurality of first contacts. For example, each of the first contacts can be formed to physically connect to a respective conductor layer from each alternating conductor/dielectric stack in the staircase structure, a respective etch stop layer of the channel structures, and a respective slit structure.

In some embodiments, the etch stop layer includes polysilicon (e.g., polycrystalline silicon or "poly"), titanium (Ti), titanium nitride (TiN), tungsten (W), or combinations thereof. Further each of the plurality of conductor/dielectric layer pairs can include a metal and a silicon oxide (SiO_2) layer. The aforementioned materials are exemplary and are not limiting. As such, other appropriate materials can be used.

In some embodiments, the memory device includes dummy (e.g., electrically non-functional) channel structures extending vertically through the alternating conductor/dielectric stack.

In some embodiments, the memory device includes a second contact layer over the first contact layer and a third contact layer over the second contact layer. The second and third contact layers include respective second and third contacts. Some contacts of the third contact layer, via the respective second and first contacts, are electrically connected to the conductor layers from the alternating conductor/dielectric stack in the staircase structure, and to the channel and slit structures. In some embodiments, the first, second and third contact layers form an interconnect network for the 3D NAND memory device. The interconnect network can be used to transfer electrical signals between the various components of the 3D NAND memory device.

According to some embodiments of the present disclosure, a method for forming a 3D NAND memory device is disclosed herein. For example, an alternating dielectric stack can be formed over a substrate. The alternating dielectric stack can include a plurality of dielectric layer pairs, where each pair includes a first dielectric layer and a second dielectric layer different from the first dielectric layer. A first staircase structure can be subsequently formed in the alternating dielectric stack. Subsequently, channel structures and a dielectric structure—each extending vertically through the alternating dielectric stack—are formed.

In some embodiments, the dielectric material of the dielectric structure can be the same as the material of the second dielectric layer in the alternating dielectric stack. A sacrificial etch stop layer can be disposed on each channel structure. Slit openings extending through the alternating dielectric stack are subsequently formed and the first dielectric layers of the alternating dielectric stack are replaced with conductor layers through the slit openings to form a plurality of conductor/dielectric layer pairs. The slit openings are then filled with a conductor material. Further, a first contact layer with a plurality of first contacts can be formed so that each first conductor layer from the alternating conductor/dielectric stack in the first staircase structure is connected to a first contact. Additionally, each channel and slit structure can also be connected to a respective first contact of the first contact layer. In some embodiments, and prior to the formation of the first contact layer, the sacrificial etch stop layer over each channel structure can be replaced with a "permanent" etch stop layer.

In some embodiments, TAC openings are etched through the dielectric structure and subsequently filled with a metal to form respective TAC structures that extend through the dielectric structure and a portion of the substrate. In some embodiments, TAC structures are part of the first contact layer. In other words, the TAC structures can be formed concurrently with the first contact layer.

In some embodiments, a second contact layer with a plurality of second contacts can be formed over the first contact layer. Second contacts can be connected to respective first contacts of the first contact layer.

In some embodiments, a third contact layer with a plurality of third contacts can be formed over the second contact layer. The third contact layer, via the respective second and first contact layers, can electrically connect to the various components of the memory device including the first con-

ductor layers of the alternating conductor/dielectric stack in the first staircase structure, the channel structures, and the slit structures.

In some embodiments, prior to forming the slit structure, a doped region can be formed in the substrate. The slit structure can be in contact with the doped region.

In some embodiments, the permanent etch stop layer includes one or more of polysilicon, titanium, titanium nitride, and tungsten. The dielectric structure can include silicon oxide. Each of the plurality of dielectric layer pairs can include a silicon oxide layer and a silicon nitride layer. Each of the plurality of conductor/dielectric layer pairs can include a metal layer and a silicon oxide layer.

Further features and advantages of the invention, as well as the structure and operation of various embodiments of the invention, are described in detail below with reference to the accompanying drawings. It is noted that the invention is not limited to the specific embodiments described herein. Such embodiments are presented herein for illustrative purposes only. Additional embodiments will be apparent to persons skilled in the relevant art(s) based on the teachings contained herein.

BRIEF DESCRIPTION OF THE DRAWINGS

The accompanying drawings, which are incorporated herein and form a part of the specification, illustrate embodiments of the present disclosure and, together with the description, further serve to explain the principles of the present disclosure and to enable a person skilled in the pertinent art to make and use the present disclosure.

FIGS. **1**A-**1**C illustrate various regions of a 3D memory device in the plan-view, according to some embodiments of the present disclosure.

FIG. **2** illustrates a cross-section of a 3D memory device, according to some embodiments of the present disclosure.

FIG. **3** is a flowchart of an exemplary method for forming a 3D memory device, according to some embodiments of the present disclosure.

FIGS. **4**-**13** illustrate an exemplary fabrication process for forming a 3D memory device, according to some embodiments of the present disclosure.

The features and advantages of the present disclosure will become more apparent from the detailed description set forth below when taken in conjunction with the drawings, in which like reference characters identify corresponding elements throughout. In the drawings, like reference numbers generally indicate identical, functionally similar, and/or structurally similar elements. Additionally, generally, the left-most digit(s) of a reference number identifies the drawing in which the reference number first appears. Unless otherwise indicated, the drawings provided throughout the disclosure should not be interpreted as to-scale drawings.

DETAILED DESCRIPTION

Although specific configurations and arrangements are discussed, it should be understood that this is done for illustrative purposes only. A person skilled in the art will recognize that other configurations and arrangements can be used without departing from the spirit and scope of the present disclosure. It will be apparent to a person skilled in the art that the present disclosure can also be employed in a variety of other applications.

It is noted that references in the specification to "one embodiment," "an embodiment," "an example embodiment," "some embodiments," etc., indicate that the embodiment described may include a particular feature, structure, or characteristic, but every embodiment may not necessarily include the particular feature, structure, or characteristic. Moreover, such phrases do not necessarily refer to the same embodiment. Further, when a particular feature, structure or characteristic is described in connection with an embodiment, it would be within the knowledge of a person skilled in the art to affect such feature, structure or characteristic in connection with other embodiments whether or not explicitly described.

In general, terminology may be understood at least in part from usage in context. For example, the term "one or more" as used herein, depending at least in part upon context, may be used to describe any feature, structure, or characteristic in a singular sense or may be used to describe combinations of features, structures or characteristics in a plural sense. Similarly, terms, such as "a," "an," or "the," again, may be understood to convey a singular usage or to convey a plural usage, depending at least in part upon context.

It should be readily understood that the meaning of "on," "above," and "over" in the present disclosure should be interpreted in the broadest manner such that "on" not only means "directly on" something but also includes the meaning of "on" something with an intermediate feature or a layer therebetween, and that "above" or "over" not only means the meaning of "above" or "over" something but can also include the meaning it is "above" or "over" something with no intermediate feature or layer therebetween (i.e., directly on something).

Further, spatially relative terms, such as "beneath," "below," "lower," "above," "upper," and the like, may be used herein for ease of description to describe one element or feature's relationship to another element(s) or feature(s) as illustrated in the figures. The spatially relative terms are intended to encompass different orientations of the device in use or operation in addition to the orientation depicted in the figures. The apparatus may be otherwise oriented (rotated 90 degrees or at other orientations) and the spatially relative descriptors used herein may likewise be interpreted accordingly.

As used herein, the term "substrate" refers to a material onto which subsequent material layers are added, or otherwise "disposed." The substrate itself can be patterned. Materials disposed on (e.g., on top) the substrate can be patterned or can remain unpatterned. Furthermore, the substrate can include a wide array of semiconductor materials, such as silicon, germanium, gallium arsenide, indium phosphide, etc. Alternatively, the substrate can be made from an electrically non-conductive material, such as a glass, a plastic, or a sapphire wafer.

As used herein, the term "layer" refers to a material portion including a region with a thickness. A layer can extend over the entirety of an underlying or overlying structure, or may have an extent less than the extent of an underlying or overlying structure. Further, a layer can be a region of a homogeneous or inhomogeneous continuous structure that has a thickness less than the thickness of the continuous structure. For example, a layer can be located between any pair of horizontal planes between, or at, a top surface and a bottom surface of the continuous structure. As used herein, the term "top surface" or "front side" of a structure, a layer, or an element refers to a surface where subsequent elements or structures can be formed thereon. Conversely, as used herein, the term "bottom surface" or "backside" refers to the side of the structure, layer, or element that is opposite to the top surface. It is noted that the terms "top surface" or "front side" and "bottom surface" or

"backside" are used merely for description purposes and not to limit the orientation of the elements, layers, or structures. A layer can extend horizontally, vertically, and/or along a tapered surface. A substrate can be a layer, can include one or more layers therein, and/or can have one or more layer thereupon, thereabove, and/or therebelow. A layer can include multiple layers. For example, an interconnect layer can include one or more conductor and contact layers (in which contacts, interconnect lines, and/or vias are formed) and one or more dielectric layers.

As used herein, the term "nominal/nominally" refers to a desired, or target, value of a characteristic or parameter for a component or a process operation, set during the design phase of a product or a process, together with a range of values above and/or below the desired value. The range of values can be due to slight variations in manufacturing processes or tolerances. As used herein, the term "about" indicates the value of a given quantity that can vary based on a particular technology node associated with the subject semiconductor device. Based on the particular technology node, the term "about" can indicate a value of a given quantity that varies within, for example, 10-30% of the value (e.g., ±10%, ±20%, or ±30% of the value).

As used herein, the term "3D memory device" refers to a semiconductor device with vertically-oriented strings of memory cell transistors (referred to herein as "memory strings," such as NAND strings) on a laterally-oriented substrate so that the memory strings extend in the vertical direction with respect to the substrate. As used herein, the term "vertical/vertically" means nominally perpendicular to the lateral surface of a substrate.

Various embodiments in accordance with the present disclosure provide a 3D memory device with interconnect structures for a memory array (also referred to herein as an "array device"). The interconnect structures allow contacts to various memory array structures (e.g., NAND strings, gate line slits, word lines, etc.) to be fabricated in a limited number of steps (e.g., in a single step or in two steps), thereby reducing the process complexity and manufacturing cost. In some embodiments, the interconnect structures disclosed herein include bit lines in the top interconnect layer, which are suitable for those 3D memory architectures where the array device and a peripheral device are formed on different substrates and are subsequently joined by hybrid bonding in a "face-to-face" configuration.

Moreover, the interconnect structures disclosed herein can include TAC structures for providing vertical interconnects between the stacked array device and a peripheral device (e.g., for power bus and metal routing), thereby reducing metal levels and shrinking die size. In some embodiments, the TAC structures, as part of the interconnect structures, are formed within "single-material" dielectric structures (e.g., dielectric structures that are made of a single dielectric as opposed to a stack of alternating dielectric layers). According to some embodiment, forming TAC structures in a single-material dielectric structure is advantageous compared to the formation of TAC structures in a stack of alternating dielectric layers in terms of etching capability and cost.

According to some embodiments, FIGS. **1**A-**1**C are plan-views of various exemplary regions of a 3D memory device along a bit line (BL) and a word line (WL) direction as denoted by respective axes labeled BL and WL. For example, FIG. **1**A is a plan-view of an exemplary TAC region **102** of the 3D memory device. TAC region **102** includes NAND string regions **110**, a TAC region **120**, and top selective gate (TSG) staircase regions **130**. NAND string regions **110** can include an array of NAND strings **112**, each including a plurality of stacked memory cells. TSG staircase regions **130** can be disposed on the sides of NAND string regions **110** and adjacent to TAC region **120** in the plan-view. TSG staircase regions **130** can include an array of TSG contacts **132** formed on a staircase structure having two levels or more. TSG contacts **132** can be electrically connected to the top selective gates of NAND strings **112** in NAND string region **110** through a network of interconnect contacts not shown in FIG. **1**A.

In some embodiments, TAC region **120** is between two TSG staircase regions **130** in the WL direction of the 3D memory device. TAC region **120** can be defined by a single-material dielectric structure **124**. Multiple TAC structures **126** can be formed within TAC region **120** in dielectric structure **124**. In some embodiments, dummy (e.g., non-electrically functional) channel structures **122** are formed outside TAC region **120** to provide mechanical support to the memory array structures. By way of example and not limitation, dummy channel structures **122** can be formed in any regions outside TAC region **120**, for example, along the edges of NAND string regions **110** adjacent to TSG staircase regions **130**. As shown in FIG. **1**A, WL TAC region **102** can also include a plurality of slit structures **114** with each extending in the WL direction. At least some slit structures **114** can function as the common source contact for an array of NAND strings **112** in NAND string regions **110**. According to some embodiments, slit structures **114** can divide the 3D memory device into multiple memory blocks.

FIG. **1**B is a plan-view of an exemplary bit line (BL) TAC region **104** of the 3D memory device, including NAND string regions **110** and a TAC region **120**. NAND string regions **110** can include an array of NAND strings **112**, each including a plurality of stacked memory cells. In some embodiments, TAC region **120** is disposed between two NAND string regions **110** in the bit line direction of the 3D memory device (labeled as "BL" in FIGS. **1**A-**1**C). TAC region **120** can be defined by a single-material dielectric structure **124**. More than one TAC structures **126** can be formed in TAC region **120** within dielectric structure **124**, as shown in FIG. **1**B. Further, BL TAC region **104** can also include slit structures **114** with each extending in the WL direction. At least some slit structures **114** can function as the common source contact for an array of NAND strings **112** in NAND string regions **110**. Slit structures **114** can also divide the 3D memory device into multiple memory blocks. In some embodiments, dummy (e.g., non-electrically functional) channel structures **122** are formed in part of NAND string regions **110**, for example, in the memory areas that are adjacent to TAC region **120** in the bit line direction.

FIG. **1**C is a plan-view of an exemplary staircase TAC region **106** of the 3D memory device, including a NAND string region **110**, a staircase region **140**, and a TAC region **120**. NAND string region **110** can include an array of NAND strings **112**, each including a plurality of stacked memory cells. Staircase region **140** can include a staircase structure and an array of WL contacts **142** formed on the staircase structure. In some embodiments, TAC region **120** can be formed in staircase region **140**. TAC region **120** is defined by the single-material dielectric structure **124**. Multiple TAC structures **126** can be formed within TAC region **120** in single-material dielectric structure **124**. As shown in FIG. **1**C, staircase TAC region **106** can also include slit structures **114** with each extending in the WL direction. At least some slit structures **114** can function as the common source contact for an array of NAND strings **112** in NAND string region **110**. Slit structures **114** can also divide the memory

device into multiple memory blocks. In some embodiments, dummy (e.g., non-electrically functional) channel structures are formed in staircase region **140** outside TAC region **120** (not shown in FIG. **1**C).

FIG. **2** is a cross-sectional view of an exemplary 3D memory device **200**, according to some embodiments of the present disclosure. 3D memory device **200** can include a substrate **202**. Substrate **202** can include single crystalline silicon (Si) or another elementary semiconductor such as, for example, (i) germanium (Ge); (ii) a compound semiconductor including silicon germanium (SiGe), silicon carbide (SiC), gallium arsenide (GaAs), gallium phosphide (GaP), indium phosphide (InP), indium arsenide (InAs), and/or indium antimonide (InSb); (iii) an alloy semiconductor including gallium arsenide phosphide (GaAsP), aluminum indium arsenide (AlInAs), aluminum gallium arsenide (AlGaAs), gallium indium arsenide (GaInAs), gallium indium phosphide (GaInP), and/or gallium indium arsenide phosphide (GaInAsP); or (iv) combinations thereof. Further, substrate **202** can be a "semiconductor-on-insulator" wafer, such as silicon on insulator (SOI) or germanium on insulator (GOI). For example purposes, substrate **202** will be described in the context of single crystalline Si (e.g., a Si wafer). Based on the disclosure herein, other materials, as discussed above, can be used. These materials are within the spirit and scope of this disclosure. In some embodiments, substrate **202** can be a thinned substrate, which was thinned by means of grinding, wet and/or dry etching, chemical mechanical planarization (CMP), or a combination thereof.

3D memory device **200** can include an array device above substrate **202** (on a top surface of substrate **202**). It is noted that x, y, and z axes are added in FIG. **2** to further illustrate the spatial relationship between the various components in 3D memory device **200**. Substrate **202** includes two lateral surfaces (e.g., a top surface and a bottom surface) extending laterally in the x-direction (the lateral direction) and y-direction. As used herein, whether one component (e.g., a layer or a device) is "on," "above," or "below" another component (e.g., a layer or a device) of a semiconductor device (e.g., 3D memory device **200**) is determined relative to substrate **202** in the z-direction (the vertical direction) when the substrate is positioned in the lowest plane of the semiconductor device in the z-direction. The same notion for describing spatial relationship is applied throughout the present disclosure. Further, the y-direction is pointing into the page of FIG. **2**.

By way of example and not limitation, 3D memory device **200** can be part of a non-monolithic 3D memory device, in which components (e.g., the peripheral device and array device) can be fabricated independently on different substrates and then bonded in a "face-to-face" configuration. In some embodiments, the array device substrate (e.g., substrate **202**) remains as the substrate of the bonded non-monolithic 3D memory device, and the peripheral device (e.g., any suitable digital, analog, and/or mixed-signal peripheral circuits used for facilitating the operation of 3D memory device **200**, such as page buffers, decoders, and latches; not shown in FIG. **2**) is positioned so that it faces the 3D memory device **200** prior to hybrid bonding. Alternatively, in some embodiments, 3D memory device **200** is positioned so that it faces the peripheral device (not shown in FIG. **2** merely for clarity) prior to hybrid bonding. The array device substrate (e.g., substrate **202**) can be a thinned substrate and the back-end-of-line (BEOL) interconnects of the non-monolithic 3D memory device can be formed on the backside (e.g. bottom surface) of the thinned array device substrate **202**.

In some embodiments, 3D memory device **200** can be part of a non-monolithic 3D memory device regardless of its relative position (e.g. above or below) with respect to the peripheral device. For ease of reference, FIG. **2** depicts a state of 3D memory device **200** in which substrate **202** (the array device substrate) is positioned below the array device in the x-y plane, regardless of whether substrate **202** is the substrate of the non-monolithic 3D memory device or a thinned substrate on which the BEOL interconnect layers of the non-monolithic 3D memory device are formed.

In some embodiments, 3D memory device **200** is a NAND Flash memory device in which memory cells are provided in the form of an array of NAND strings **204** extending vertically above substrate **202**. The array device can include a plurality of NAND strings **204** that extend through a plurality of conductor layer **206** and dielectric layer **208** pairs. The plurality of conductor/dielectric layer pairs are also referred to herein as "alternating conductor/dielectric stack" **210**. In some embodiments, the number of the conductor/dielectric layer pairs in alternating conductor/dielectric stack **210** (e.g., 32, 64, or 96) defines the number of memory cells in 3D memory device **200**. Conductor layers **206** and dielectric layers **208** in alternating conductor/dielectric stack **210** alternate in the vertical direction (e.g., along the z-axis). In other words, except the layers at the top or bottom of alternating conductor/dielectric stack **210**, each conductor layer **206** can be adjoined by two dielectric layers **208** on both sides, or each dielectric layer **208** can be adjoined by two conductor layers **206** on both sides. Conductor layers **206** can each have the same thickness or different thicknesses. Similarly, dielectric layers **208** can each have the same thickness or different thicknesses. By way of example and not limitation, the thickness of each conductor layer **206** can range from about 25 nm to about 40 nm, and the thickness of each dielectric layer **208** can range from about 20 nm to about 35 nm.

By way of example and not limitation, conductor layers **206** can include conductive materials such as tungsten (W), cobalt (Co), copper (Cu), aluminum (Al), doped polycrystalline Si (polysilicon), doped single crystalline Si, silicides, or any combination thereof. Dielectric layers **208** can include dielectric materials including, but not limited to, silicon oxide (Si_xO_y, thereafter "SiO_2"), silicon nitride (Si_xN_y, thereafter "SiN"), silicon oxynitride (SiON), or any combination thereof. In some embodiments, conductor layers **206** include metal layers, such as W, and dielectric layers **208** include SiO_2.

As shown in FIG. **2**, at least on one side in the lateral direction (e.g., along the x-axis), alternating conductor/dielectric stack **210** can include a staircase structure **212**. Each "level" or "step" **214** of staircase structure **212** can include one or more conductor/dielectric layer pairs on stacked top of each other. Each conductor/dielectric layer pair includes a conductor layer **206** and dielectric layer **208** respectively. The top layer in each level **214** of staircase structure **212** is a conductor layer **206** available for interconnection in the vertical direction (e.g., along the z-axis). In some embodiments, levels **214** in staircase structure **212** have the same height. Further, adjacent levels **214** of staircase structure **212** are being offset with one another by a nominally same distance in the x-direction. More specifically, for each two adjacent levels **214** of staircase structure **212**, the first level that is closer to substrate **202** can extend laterally further than the second level, thereby forming a "landing area" or a "connection point" on the first level for interconnection in the vertical direction (e.g., along the z-axis).

As shown in FIG. **2**, each NAND string **204** includes a channel structure **216** that extends through alternating conductor/dielectric stack **210**. Channel structure **216** is filled with semiconductor materials (e.g., as a semiconductor channel **218**) and dielectric materials (e.g., as a memory film **220**). In some embodiments, semiconductor channel **218** includes Si, such as amorphous Si, polysilicon, single crystalline Si, etc. In some embodiments, memory film **220** is a composite stack of layers that includes a tunneling layer, a storage layer (also known as "charge trap/storage layer"), and a blocking layer. Each NAND string **204** can have a cylindrical shape (e.g., a pillar shape). Semiconductor channel **218**, the tunneling layer, the storage layer, and the blocking layer are arranged along a direction from the center toward the outer surface of the pillar in this order, according to some embodiments. The tunneling layer can include SiO_2, SiN, or any combination thereof. The storage layer can include SiN, SiON, silicon, or any combination thereof. The blocking layer can include SiO_2, SiN, high dielectric constant (high-k) dielectrics (e.g., with a dielectric constant greater than 3.9), or any combination thereof.

In some embodiments, NAND strings **204** include a plurality of control gates (each being part of a WL). Conductor layer **206** in alternating conductor/dielectric stack **210** can act as the control gate for memory cells in NAND strings **204**. Additionally, each conductor layer **206** can act as the control gate for multiple NAND strings **204** that can extend laterally (e.g., along the x-y plane) as a WL ending in staircase structure **212**.

In some embodiments, each NAND string **204** includes an epitaxial layer **222** and an etch stop plug **224** at the respective bottom and top of NAND string **204**, as shown in FIG. **2**. For each NAND string **204**, epitaxial layer **222** is referred to herein as an "epitaxial plug." Each of epitaxial plug **222** and etch stop plug **224** can be in contact with a respective end of channel structure **216**. Epitaxial plug **222** can include, for example, a semiconductor material (e.g., single crystalline Si) that is epitaxially grown from substrate **202**. Etch stop plug **224** can include semiconductor materials (e.g., polysilicon) or conductor materials (e.g., metals). In some embodiments, etch stop plug **224** includes an opening filled with a titanium/titanium nitride stack (barrier and adhesion layer) and W (conductor). As the name suggests, etch stop plug **224** is an etch stop layer that prevents etching of dielectrics in channel structure **216**, such as SiO_2 and SiN, during subsequent etch operations. In some embodiments, etch stop plug **224** acts as the drain of NAND string **204**.

In some embodiments, the array device further includes slit structures **226**. Each slit structure **226** can extend vertically (e.g., along the z-axis) through alternating conductor/dielectric stack **210**. Slit structures **226** also extend along the y-axis to separate alternating conductor/dielectric stack **210** into multiple blocks as discussed earlier for FIGS. **1A-1C**. Slit structures **226** are filled with conductor materials including, but not limited to, W, Co, Cu, Al, a silicide, or any combination thereof. Slit structures **226** further include a dielectric layer interposed between the conductor in slit structure **226** and alternating conductor/dielectric stack **210** to electrically insulate the conductor materials in the slit structure from the surrounding conductor layers in alternating conductor/dielectric stack **210**. In some embodiments, slit structure **226** acts as the source contact for NAND strings **204** located in the same memory block. Consequently, a slit structure **226** can function as the "common source contact" of multiple NAND strings **204** within a memory block.

In some embodiments, substrate **202** includes doped regions **228** with p-type or n-type dopants at a desired doping level. Each doped region **228** is in contact with a respective slit structure **226**, as shown in FIG. **2**. In some embodiments, slit structures **226** are electrically coupled to NAND strings **204** through doped regions **228**.

It has to be noted that NAND strings **204** and slit structures **226** are partially formed in a dielectric layer **230** that is disposed over alternating conductor/dielectric stack **210**. In some embodiments, dielectric layer **230** can be a layer stack made of a single dielectric material—as opposed to being a stack of alternating dielectric layers. By way of example and not limitation, dielectric layer **230** is an oxide layer, such as SiO_2. In other words, dielectric layer **230** can be the same as dielectric layer **208**. Further, and as shown in FIG. **2**, dielectric layer **230** can extend over staircase structure **212**.

As shown in FIG. **2**, dielectric conductor/dielectric stack **210** is "disrupted" by single-material dielectric structure **232** (thereafter "dielectric structure **232**") along the x-direction (and along the y-direction—not shown from FIG. **2**). In some embodiments, dielectric structure **232** defines the boundaries, the shape, and the size of TAC region **120** (e.g., shown in FIGS. **1A-1C**). Consequently, as shown in the plan-views of FIGS. **1A-1C**, dielectric structure **232** can be surrounded by conductor/dielectric stack **210**. Further, dielectric structure **232** can extend in the x-y plane and be coplanar with dielectric layer **230** (e.g., the top surfaces of dielectric structure **232** and dielectric layer **230** are flushed). In some embodiments, dielectric structure **232** is formed so that it is aligned to or covers at least a portion of an underlying isolation structure or region **233** (thereafter "shallow trench isolation (STI) structure **233**). Please note that, STI structure **233** is exemplary and is not limiting. As such, other isolation structures can be used. Further, dielectric structure **232** is in contact with STI structure **233**. By way of example and not limitation, STI structure **233** is formed on a top portion of substrate **202** and is filled with a dielectric material, including but not limited to SiO_2, for example. In some embodiments, the footprint of dielectric structure **232** is smaller or equal to the footprint of STI structure **233**. For example, in some embodiments, dielectric structure **232** can cover only portion of STI structure **233**.

In some embodiments, dielectric structure **232** includes the same material with dielectric layer **230**, and/or dielectric layer **208**. For example, dielectric structure **232** can include SiO_2. However, this is not limiting and therefore dielectric structure **232** can include a different material than dielectric layer **208** or dielectric layer **230**. In some embodiments, dielectric structure **232** can have different shapes. For example, as shown in the plan-views of FIGS. **1A-1C**, TAC region **120** can have a rectangle or square shape. However, these shapes are not limiting and dielectric structures **232** can have any shape according to a design layout. Further, multiple dielectric structures, like dielectric structure **232**, are possible across substrate **202**.

As shown in FIG. **2**, 3D memory device **200** further includes TACs **234**, which extend vertically through dielectric structure **232**. According to some embodiments, etching through dielectric structure **232** can be advantageous (e.g., involve fewer etch operations) compared to etching through a stack of alternating layers having the same overall thickness. For example, the formation of TACs **234** in an alternating layer stack with a thickness of about 6 μm or more (e.g., for a 64 tier 3D memory device) requires multiple etch and fill operations—therefore, increases the fabrication cost. Each TAC **234** can extend through the entire thickness of

dielectric structure **232** and extend through at least a portion of STI structure **233** in substrate **202**.

TACs **234** can carry electrical signals from and/or to 3D memory device **200**, such as part of the power bus, with shorten interconnect routing. In some embodiments, TACs **234** can provide electrical connections between 3D memory device **200** and the peripheral device (e.g., on a CMOS chip; not shown in FIG. **2**) and/or between BEOL interconnects (not shown in FIG. **2**) and the peripheral device. Each TAC **234** is filled with conductor materials, including, but not limited to, W, Co, Cu, Al, doped Si, silicides, or any combination thereof. Since TACs **234** are embedded in dielectric structure **232**, additional layers of dielectric are not required to insulate the conductor material.

In some embodiments, 3D memory device **200** includes a plurality of "local contacts" in physical and electrical contact with the various memory array structures disclosed herein, such as NAND strings **204**, slit structures **226**, and conductor layers or WL **206** in staircase structure **212**. The contacts are referred to herein as "local contacts" because they are in direct contact with the memory array structures, and further because they are formed within dielectric layer **230**. As shown in FIG. **2**, local contacts can include NAND string contacts **236**, slit structure contacts **238**, and WL contacts **240**. In some embodiments, TACs **234** are also considered local contacts. As used herein, the term "contact" can broadly include any suitable types of interconnects including vertical interconnect access (via) lines and lateral lines (interconnect lines).

In some embodiments, each local contact is coplanar with one another, e.g., on the top surface of a dielectric layer **230** (and dielectric structure **232** for TACs **234**) in which the local contacts are formed. The lower end of each local contact can be in direct contact with the respective memory array structure. For example, the lower end of NAND string contact **236** can be in contact with etch stop plug **224** of NAND string **204**, and the lower end of slit structure contact **238** can be in contact with the upper end of slit structure **226**. The lower end of each WL contact **240** can be in contact with top conductor layer or WL **206** in a respective level of staircase structure **212**. Each local contact is filled with conductor materials including, but not limited to, W, Co, Cu, Al, silicides, or any combination thereof. Some or all of the local contacts can be formed simultaneously in a single contact forming process as described below in detail.

As shown in FIG. **2**, in addition to the local contacts, 3D memory device **200** can further include a contact layer **242** and an interconnect layer **244** as part of its interconnect structures. Contact layer **242** can include a dielectric layer and a plurality of contacts **246** (e.g., vias) in the dielectric layer. Interconnect layer **244** can be formed on contact layer **242** and can include another dielectric layer and a plurality of interconnect contacts **248** (e.g., interconnect lines) in the dielectric layer. The local contacts, contacts **246** in contact layer **242**, and interconnect contacts **248** in interconnect layer **244** can be collectively referred to herein as the interconnect structures of 3D memory device **200**.

In some embodiments, each contact **246** can be filled with conductor materials including, but not limited to, W, Co, Cu, Al, silicides, or any combination thereof. All contacts **246** can be formed simultaneously in a single contact forming process as described below in detail.

In some embodiments, each interconnect contact **248** can be filled with conductor materials including, but not limited to, W, Co, Cu, Al, silicides, or any combination thereof. All interconnect contacts **248** can be formed simultaneously in a single contact formation process as described below in detail.

In some embodiments, interconnect contacts **248** in interconnect layer **244** can include bit lines **250**, which are electrically connected to NAND strings **204**, respectively, by corresponding contacts **246** and NAND string contacts **236**. Bit lines **250** can be used to individually address a corresponding NAND string **204**. Interconnect contacts **248** can further include source lines that are electrically connected to slit structures **226** (source contacts). Further, interconnect lines can be electrically connected to TACs **234** and to WL **206** in staircase structure **212** through respective contacts **246** and WL contacts **240**. It is to be understood that the number of interconnect layers in 3D memory device **200** is not limited by the example in FIG. **2**. Additional interconnect layer(s) with contacts can be formed to provide an interconnect network of structures for 3D memory device **200**.

FIG. **3** is a flowchart of an exemplary method **300** for forming a 3D memory device similar to 3D memory device **200**, according to some embodiments of the present disclosure. FIGS. **4-13** will be used to describe the exemplary fabrication process for forming a 3D memory device using method **300**. By way of example and not limitation, the 3D memory device fabricated with method **300** can be the 3D memory device **200** depicted in FIG. **2**. It should be understood that the operations shown in method **300** are not exhaustive and that other operations can be performed before, after, or between any of the operations. For example, other operations may include wet clean operations, dry etch operations, photolithography operations, etc. Further, the sequence of the operations in method **300** is not limiting, and some operations may be performed concurrently or in a different order.

Referring to FIG. **3** and FIG. **4**, method **300** begins with operation **302**, where an alternating dielectric stack **400** is disposed, or otherwise deposited, on a substrate **202**. For example purposes, substrate **202** in method **300** will be described in the context of single crystalline Si. Based on the disclosure herein, other materials, as discussed above, can be used. These materials are within the spirit and scope of this disclosure. A plurality of first dielectric layer **208** and second dielectric layer **402** pairs can be formed on substrate **202** to form alternating dielectric stack **400**. In some embodiments, each dielectric layer pair includes a SiO_2 layer and a SiN layer. For example, first dielectric layer **208** can be made of SiO_2 (same as dielectric layer **230** of alternating conductor/dielectric stack **210** of FIG. **2**) and second dielectric layer **402** can be made of SiN. Alternating dielectric stack **400** can be formed by one or more thin-film deposition processes including, but not limited to, chemical vapor deposition (CVD), plasma-enhanced CVD (PECVD), physical vapor deposition (PVD), atomic layer deposition (ALD), plasma-enhanced ALD (PEALD), or any combination thereof. By way of example and not limitation, the height of dielectric stack **400** can range from about 4 μm to about 30 μm. In some embodiments, second dielectric layer **402** can be a sacrificial layer that will be replaced with a conductor in a subsequent operation so that alternating dielectric stack **400** can be converted to an alternating conductor/dielectric stack, similar to alternating conductor/dielectric stack **210** of FIG. **2**.

According to some embodiments, substrate **202** includes isolation regions or structures, like STI structure **233** shown in FIG. **4**. STI structure **233** in FIG. **4** can be formed on a top portion of substrate **202**. By way of example, STI

structure **233** can be formed prior to the formation of alternating dielectric stack **400**. STI structures can be filled with a dielectric material, such as for example SiO_2.

Method **300** continues with operation **304**, as illustrated in FIG. **3**, in which a staircase structure (like staircase structure **212** of FIG. **2**) is formed from a portion of alternating dielectric stack **400**. In some embodiments, a "trim-etch" process can be used on at least one side (in the lateral direction, x-direction) of alternating dielectric stack **400** to form a staircase structure with multiple levels (e.g., steps). By way of example and not limitation, a trim-etch process can be a multi-cycle process, where each cycle includes one or more photolithography operations followed by an etch operation. During the photolithography operations, a patterned photoresist (PR) layer masks a portion of dielectric stack **400**. A subsequent first etch process removes a predetermined number of dielectric pairs from the exposed portion of dielectric stack **400** to form a first step (e.g., first level) in dielectric stack **400**. The PR is then laterally trimmed (e.g., recessed in the x-direction) to expose an additional portion of dielectric stack **400**. A subsequent second etch removes a predetermined number of dielectric pairs from the newly exposed dielectric stack **400** and the first step. Hence, a second step (e.g., second level) in dielectric stack **400** is formed. This step formation process continues in this fashion (e.g., a PR trim followed by an etch operation) until the desired number of steps in dielectric stack **400** is formed and the staircase structure is complete. As a result of this process, each level can include any desired number of dielectric layer pairs with alternating first dielectric layer **208** and second dielectric layer **402**. After the staircase structure formation, the PR layer is removed (stripped) with a wet etch process. FIG. **5** shows the resulting staircase structure **500** made from alternating dielectric stack **400** according to the description of operation **304** of method **300**.

In some embodiments, the etch process used in operation **304** can be a dry etch process that uses a single etch gas chemistry for both dielectric layers **208** and **402**. Alternatively, the etch process used in operation **304** can use different etch chemistries for each dielectric layer. Further, depending on the selectivity of the etch chemistry, the etch process can be timed, end-pointed, or a combination thereof.

After the staircase structure formation, dielectric layer **230** is deposited over staircase structure **500** and dielectric stack **400**. In some embodiments, a CMP or a dry etch process can be used to planarize the top surface of dielectric layer **230**, as shown in FIG. **5**. By way of example and not limitation, dielectric layer **230** can be SiO_2 deposited by PECVD, CVD, or another suitable deposition process. The thickness of dielectric layer **230** over alternating dielectric stack **400** can range from about 10 to about 1000 nm. In some embodiments, dielectric layer **230** is the same as dielectric layer **208** of dielectric stack **400**, e.g., SiO_2.

Method **300** continues with operation **306**, as illustrated in FIG. **3**, where a channel structure can be formed over substrate **202**. However, this is not limiting and additional channel structures can be formed. Each channel structure can extend vertically through the alternating dielectric stack **400**, as discussed earlier. Fabrication of each channel structure begins by etching a channel hole through dielectric layer **230** and alternating dielectric stack **400** until substrate **202** is exposed through the channel hole. Prior to filling the channel hole, an epitaxial plug **222** can be grown through the channel hole from substrate **202**, as shown in FIG. **6**. By way of example and not limitation, epitaxial plug **222** can be single crystalline Si. The height of epitaxial plug **222** can be controlled through the epitaxial growth process conditions. Channel structure **216** can be subsequently formed on epitaxial plug **222** by filling the channel hole.

By way of example and not limitation, a dry etch process can be used to form the channel hole. In some embodiments, the fabrication process of channel structure **216** further includes depositing memory film **220** and semiconductor channel **218** so that memory film **220** can be interposed between semiconductor channel **218** and the dielectric layer pairs **402** and **402** of alternating dielectric stack **400**. Semiconductor channel **218** can include semiconductor materials, such as polysilicon. Memory film **220** can be a composite stack of dielectric layers including a combination of a tunneling layer, a storage layer, and a blocking layer (not individually shown in FIG. **6**).

By way of example and not limitation, the tunneling layer can include dielectric materials such as SiO_2, SiN, SiON, or a combination thereof. Electrons or holes from the semiconductor channel can tunnel into a storage layer through the tunneling layer. The storage layer can include materials for storing charge. The storage layer materials include, but are not limited to, SiN, SiON, a combination of SiO_2 and SiN, or a combination thereof. The blocking layer can include a single dielectric material, such as SiO_2, or a stack of dielectric materials, such as $SiO_2/SiN/SiO_2$ (ONO). The blocking layer can further include a high-k dielectric, such as aluminum oxide (Al_2O_3). Semiconductor channel **218** and memory film **220** can be formed by one or more thin-film deposition processes, such as ALD, CVD, PEALD, PECVD, any other suitable deposition processes, or a combination thereof.

In some embodiments, dummy channel structures (not shown in FIGS. **4-13**; e.g., dummy channel structures **122** in FIGS. **1A-1B**) are formed simultaneously with channel structures **216**. The dummy channel structures can extend vertically through the alternating layer stack and can be filled with the same materials as those in channel structures **216**. However, local contacts are not formed on the dummy channel structures to provide electrical connections with other components of the 3D memory device. Thus, the dummy channel structures cannot be used for forming memory cells in the 3D memory device, i.e., they are not electrically functional or otherwise operational. In some embodiments, the dummy channel structures are used as structural elements.

Referring to FIG. **3**, method **300** continues with operation **308** and the formation of an opening in the alternating dielectric layer stack. Formation of the opening involves etching portions of dielectric layer **230** and dielectric stack **400** until STI structure **233** of substrate **202** is exposed (e.g., through the etched portions of dielectric layer **230** and dielectric stack **400**), as shown in FIG. **6**. In other words, the opening can be formed so that it is aligned to STI structure **233**. In some embodiments, the opening cannot expose an area beyond the STI structure **233**. For example, the opening cannot expose STI structure **233** and a portion of substrate **202**. However, the opening can expose a portion of STI structure **233**. This can be accomplished via photolithography and etch methods (patterning). For example, photolithography can be used to form a patterned PR structure or a patterned hard mask (HM) (not shown in FIG. **6**) over dielectric layer **230**. The patterned PR structure or patterned HM can have an opening that exposes an area of dielectric layer **230**. The opening in the patterned PR structure or patterned HM can be positioned so that it is over an area of the underlying STI structure **233**. Areas of dielectric layer **230**, where the formation of a dielectric structure is not

desired, are covered by the patterned PR structure or patterned HM. A subsequent dry etch process removes the exposed portions of dielectric layer **230** and dielectric stack **400**—e.g., through the openings in the patterned PR structure or patterned HM—until STI structure **233** of substrate **202** is exposed. In some embodiments, the dry etch process can be a multi-step, anisotropic etch that can be terminated (e.g., stopped) when STI structure **233** is exposed. By way of example and not limitation, the dry etch process can include the same or different etch chemistry for each layer (e.g., dielectric layer **230** and alternating dielectric stack **400**). As a result of operation **308**, an opening **600** with width **600***w* is formed in dielectric stack **400** over STI structure **233**, as shown in FIG. **6**. As discussed above, width **600***w* of opening **600** can be equal or shorter than width **233***w* of STI structure **233** (e.g., **600***w*≤**233***w*). In some embodiments, opening **600** may extend partially into STI structure **233**. In other words, the etch process used to form opening **600** may also remove (recess) portion of the top surface of STI structure **233**. It is noted that opening **600** shown in FIG. **6** can also extend in the y-direction (not shown in the view of FIG. **6**) and its size can be defined by the patterned PR structure or patterned HM and the process conditions during the etch process. In any direction, the area of opening **600** can be equal or smaller than the area of STI structure **233**, according to some embodiments. Additionally, multiple openings, like opening **600**, can be formed concurrently during operation **306** of method **300** in other areas of dielectric stack **400**. Further, each opening **600** can be formed over an STI structure **233**. In some embodiments, the aspect ratio of opening **600** can range from about 0.1 to about 10.

In some embodiments, opening **600** can be formed concurrently with channel structure **216**. In an alternative embodiment, opening **600** can be formed after the formation of channel structure **216**, or before the formation of channel structure **216**. Each of the aforementioned sequence of operations may require additional number of photolithography, etch, or deposition operations. After the formation of opening **600**, the patterned PR structure or patterned HM can be removed (stripped) with a wet etch process.

In referring to FIGS. **3** and **7**, method **300** continues with operation **310**, where opening **600** can be filled with a dielectric layer **702**. In some embodiments, dielectric layer **702** includes a SiO_2 layer that can be deposited by a CVD, flowable CVD (FCVD), a PECVD process, or any other suitable process that can fill a high aspect ratio structure. By way of example and not limitation, dielectric layer **702** can be the same as dielectric layer **230**, and/or first dielectric layer **208**. A CMP process or a dry etch process can be used to planarize dielectric layer **702** so that the top surfaces of dielectric layer **230** and dielectric layer **702** are coplanar as shown in FIG. **7**. As a result, dielectric structure **232** is formed in dielectric stack **400**. In some embodiments, dielectric structure **232** defines the borders of TAC region **120** shown in FIGS. **1**A-**1**C.

In some embodiments an etch stop layer is formed on the channel structures **216**. For example a dielectric layer **704** can be deposited over dielectric layers **230** and **232** and be subsequently patterned to form plug openings **706** as shown in FIG. **7**. Etch stop plug **224** can be subsequently formed on channel structures **216** by filling plug openings **708** using one or more thin-film deposition processes, such as ALD, CVD, PVD, any other suitable processes, or any combination thereof, as shown in FIG. **8**. In some embodiments, polysilicon can be used to fill plug opening **706** followed by a CMP process to remove the excess polysilicon so that etch stop plug **224** can be coplanar with dielectric layer **704**. In some embodiments, a metallic stack, such as Ti/TiN/W, can be deposited to fill plug opening **706**, followed by a CMP process to make the top surface of etch stop plug **224** and dielectric layer **704** coplanar. In some embodiments, etch stop plug **224** can be sacrificial so that it can be replaced in a subsequent operation. For example, a sacrificial etch stop plug **224** can include an oxide instead of polysilicon or a metallic stack. A sacrificial etch stop plug **224** can be removed at a later operation and replaced with a "permanent" etch stop plug made of polysilicon or a metallic stack.

In operation **312** of method **300**, as illustrated in FIG. **3**, one or more slit openings can be formed in alternating dielectric stack **400**. For example, slit opening **900** can be formed by dry etching dielectric layers **208** and **402** (e.g., SiO_2 and SiN) in dielectric stack **400**, as shown in FIG. **9**. In some embodiments, doped regions **228** can be subsequently formed in substrate **202** under each slit by, for example, ion implantation and thermal diffusion through the slits. Alternatively doped regions **228** can be formed during an earlier fabrication stage, for example, prior to the formation of dielectric stack **400**, according to some embodiments.

In operation **314** of method **300**, slit openings **900**, shown in FIG. **9**, can be used for a "gate replacement" process (also known as the "WL replacement" process) in which second dielectric layers **402** (shown in FIG. **9**; e.g., SiN) in stack **400** are replaced with conductor layers **206** (shown in FIG. **10**; e.g., W). As a result, alternating dielectric stack **400** is converted to alternating conductor/dielectric stack **210** shown in FIG. **2**.

The replacement of second dielectric layers **402** with conductor layers **206** can be achieved with the use of a wet etch process that is highly selective (e.g., with selectivity equal to, or greater than, 500:1) towards second dielectric layer **402** (e.g., SiN), in comparison to first dielectric layer **208** (e.g., SiO_2). By way of example and not limitation, the wet etch chemistry can include hot phosphoric acid (H_3PO_4). Since the wet etch chemistry is highly selective towards SiN, any layers or structures (including first dielectric layer **208** and dielectric structure **702**) made of oxide (e.g., SiO_2) will not be etched or removed (i.e., will not be affected by the wet etch process).

Once second dielectric layers **402** are fully removed (e.g., etched), a conductive layer can be deposited by CVD, PECVD, ALD, PEALD, or combinations thereof to fill the space between first dielectric layers **208** through slit openings **900**. As a result, conductor layers **206** can be formed between first dielectric layers **208** as shown in FIG. **10**. By way of example and not limitation, the conductor materials can include W, Co, Cu, Al, polysilicon silicides, or a combination thereof. In some embodiments, adhesion layers or barrier layers (not shown in FIG. **10**) may also be deposited prior to the deposition of the conductor material. In some embodiments, conductive layers **206** can be deposited with a deposition-etch-deposition process to avoid partially filling slit openings **900** with the conductor material.

In operation **316** of method **300** shown in FIG. **3**, the slit openings can be filled with a conductor material **1004** to form slit structures **226** as shown in FIG. **10**. In some embodiments, conductor material **1004** can be the same as the conductor material in conductor layers **206**. For example, slit structures **226** can be filed with W, Co, Cu, Al, polysilicon, silicides, or a combination thereof. In some embodiments, to electrically isolate conductor material **1004** of slit structure **226** from conductor layers **206**, a dielectric layer **1008** (e.g., SiO_2) can be deposited therebetween. A CMP process can subsequent remove excess conductor

material over dielectric layer **704** as shown in FIG. **10**. The lower end of slit structure **226** can be in contact with doped region **228**. In some embodiments, slit structure **226** can function as a source contact that is electrically connected to NAND string **204** through doped region **228** of substrate **202**.

Referring to FIG. **11**, a dielectric layer **1100** can be blanket deposited over dielectric layer **704** across substrate **202** so that local contacts can be formed in dielectric layer **1100**. In some embodiments, the contact formation process can be divided into two separate photolithography/etch operations to accommodate the formation of contacts with different depths or heights. For example, the shortest local contacts (e.g., the NAND string contacts, the slit structure contacts, and the upper WL contacts of the staircase structure) can be formed first, and the tallest local contacts (e.g., the TACs and the lower WL contacts of the staircase structure) can be formed second. Merely for simplicity, the aforementioned shorter local contacts can be collectively referred to as first local contacts, and the aforementioned tallest local contacts can be collectively referred to as second local contacts.

Dielectric layer **1100** can be formed by one or more thin-film deposition processes, including ALD, CVD, PVD, any other suitable processes, or any combination thereof. Dielectric layer **1100** can include dielectric materials, including, but not limited to, SiO_2, SiN, SiON, or any combination thereof. First local contacts—such as NAND string contacts **236**, slit structure contacts **238**, and upper WL contacts **240-1**—can be formed through dielectric layer **1100** by first etching vertical openings (e.g., with a dry etch), followed by filling the openings with conductor materials using ALD, CVD, PVD, any other suitable processes, or any combination thereof. By way of example and not limitation, the conductor materials used to fill the local contacts can include W, Co, Cu, Al, polysilicon, silicides, or a combination thereof. In some embodiments, prior to the conductor material fill, the openings can be filled with a barrier layer, an adhesion layer, and/or a seed layer. In some embodiments, prior to filing the openings, the oxide sacrificial etch stop plugs **224** can be replaced with permanent etch stop plugs made of polysilicon or a metallic stack, as discussed above.

Etching of dielectric layers to form the openings of first local contacts can be controlled via the "inherent" etch selectivity between the etched layer (e.g., a dielectric layer) and the underlying layer (a conductor, a nitride or oxide, etc.). For example, in the case of NAND string contacts **236**, etch stop plug **224** filled with an oxide different from dielectric layer **1100** or a nitride can prevent further etching into NAND strings **204** during the formation of the first local contact openings. In the case of slit structure contacts **238** and upper WL contacts **240-1**, further etching can be prevented due to the presence of conductor material **1004** and conductor layer **206**, which can act as an etch stop layer for the dry etch process. As a result, formation of first local contacts with different heights can be possible.

A discussed earlier, first local contacts—such as NAND string contacts **236**, slit structure contacts **238**, and upper WL contacts **240-1**—can be concurrently formed in the same contact forming process. The first local contact forming process can include multiple processes, for example, photolithography, etch, thin-film deposition, and CMP. In some embodiments, each process in the contact forming process can be performed only once for all the first local contacts. For example, a single lithography and etch process can be used to form all the openings of NAND string contacts **236**, slit structure contacts **238**, and upper WL contacts **240-1** and a single deposition process can be performed to fill all the openings of NAND string contacts **236**, slit structure contacts **238**, and upper WL contacts **240-1** with the same conductor materials. In some embodiments, a CMP process can remove excess deposited material from the top surface of dielectric layer **1100**.

In Referring to FIG. **3** and method **300**, the formation of the TAC structures (and the rest of the second local contacts) can be formed in operation **318**. Referring to FIG. **12**, and according to some embodiments, after forming the first set of local contacts (e.g., NAND string contacts **236**, slit structure contacts **238**, and upper WL contacts **240-1**) a second set of local contacts can be formed, including TACs **234** and lower WL contacts **240-2** that are close to substrate **202**. TACs **234** can be formed in dielectric layers **1100**, **704**, and **232**—and lower WL contacts **240-2** can be formed in dielectric layers **1100**, **704**, and **230**—by first etching vertical openings (e.g., by dry etching), followed by filling the openings with conductor materials using ALD, CVD, PVD, any other suitable processes, or any combination thereof. The conductor materials used for filling the local contacts can include, but are not limited to, W, Co, Cu, Al, polysilicon, silicides, or any combination thereof. In some embodiments, prior to the conductor material deposition, a barrier layer, an adhesion layer, and/or a seed layer can be formed.

TACs **234** can be formed by etching through the entire thickness of dielectric structure **702**. Since both TACs **234** and lower WL contacts **240-2** are formed in oxide layers (e.g., dielectric layers **1100**, **704**, **232**, and **230**) the overall etching process can be simplified in terms of etching chemistry, etching process tooling, overall process integration, and cost. By way of example and not limitation, the openings for TACs **234** and lower WL contacts **240-2** can be formed by a deep reactive-ion etching (DRIE) process or with any other suitable anisotropic etch process. Forming TACs **234** in dielectric structure **232** can simplify the fabrication process and reduce the fabrication cost. This is because TACs **234** can be easily formed even after the gate replacement process together with the other local contacts in a common contact forming process.

In some embodiments, the lower end of TACs **234** can be formed in STI structure **233** and in contact with substrate **202**, as shown in FIG. **12**. For example, TACs **234** can extend through STI structure **233** and stop on substrate **202**. The lower end of each lower WL contacts **240-2** can be in contact with the corresponding top conductor layer **206** (WL) of a corresponding level in the staircase structure, as shown in FIG. **12**. The upper ends of all the local contacts (including both the first and second sets of local contacts) can be coplanar with one another at the top surface of dielectric layer **1100**. The second set of local contacts (including TACs **234** and lower WL contacts **240-2**) can be simultaneously formed in the same contact forming process after the formation of the first set of local contacts. That is, all the local contacts (including both the first and second sets of local contacts) can be formed in two contact forming processes as illustrated in FIGS. **11** and **12**.

It is understood that in some embodiments, all the local contacts (including both the first and second sets of local contacts) can be simultaneously formed in a single contact forming process. That is, the two contact forming processes illustrated in FIGS. **11** and **12** can be combined into a single contact forming process. In some embodiments, each process in the contact forming process can be performed once for all of NAND string contacts **236**, slit structure contacts **238**, TACs **234**, upper WL contacts **240-1**, and lower WL

contacts **240-2**. For example, a single lithography process can be performed followed by a single etch process and a single deposition process.

In some embodiments, an additional contact layer with a plurality of contacts can be formed over the local contacts. As illustrated in FIG. **13**, contact layer **242** (including a dielectric layer **1302** and contacts **246**) can be formed over dielectric layer **1100**. Dielectric layer **1302** can be formed by one or more thin-film deposition processes, including ALD, CVD, PVD, any other suitable processes, or any combination thereof. Dielectric layer **1302** can include dielectric materials, including, but not limited to, SiO_2, SiN, SiON, or any combination thereof. Contacts **246** can be formed through dielectric layer **1302** by first etching vertical openings (e.g., using dry etch), followed by filling the openings with conductor materials using ALD, CVD, PVD, any other suitable processes, or any combination thereof. The conductor materials used to fill contacts **246** can include, but are not limited to, W, Co, Cu, Al, polysilicon, silicides, or any combination thereof. In some embodiments, prior to the conductor material deposition, a barrier layer, an adhesion layer, and/or a seed layer can be deposited in the contact opening.

As shown in FIG. **13**, the lower end of each contact **246** can be in contact with the upper end of a corresponding local contact, for example, NAND string contact **236**, slit structure contact **238**, TAC **1200**, or WL contacts **240-1** and **240-2**. In some embodiments, all contacts **246** in contact layer **242** can be simultaneously formed in the same contact forming process. In some embodiments, each contact **246** of contact layer **242** is a via. Further, contact layer **242** can be referred to as the "Via**0** (V**0**)" level/bottom level of the interconnect structures of 3D memory device **200**.

Subsequently, a plurality of third contacts in an interconnect layer can be formed. As illustrated in FIG. **13**, interconnect layer **244** (including a dielectric layer **1308** and interconnect contacts **248**) can be formed above contact layer **242**. Dielectric layer **1308** can be formed by one or more thin-film deposition processes, such as ALD, CVD, PVD, any other suitable processes, or any combination thereof. Dielectric layer **1308** can include dielectric materials, including, but not limited to, SiO_2, SiN, SiON, or any combination thereof. By way of example and not limitation, interconnect contacts **248** can be formed through dielectric layer **1308** by first etching vertical openings (e.g., with a dry etch process), followed by filling the openings with conductor materials using ALD, CVD, PVD, any other suitable processes, or any combination thereof. The conductor materials used to fill interconnect contacts **248** can include, but are not limited to, W, Co, Cu, Al, polysilicon, silicides, or any combination thereof. In some embodiments, prior to the conductor material deposition, a barrier layer, an adhesion layer, and/or a seed layer is formed.

As shown in FIG. **13**, the lower end of each interconnect contact **248** can be in contact with the upper end of corresponding contact **246** in contact layer **242**, so that each interconnect contact **248** can be electrically connected to a corresponding memory array structure, such as NAND strings **204**, slit structures **226**, and WLs **240-1** and **240-2**. In some embodiments, all interconnect contacts **248** in interconnect layer **244** can be concurrently formed in the same contact forming process. In some embodiments, each interconnect contact **248** can be an interconnect line, and interconnect layer **244** can be referred to as the "Metal**0** (M**0**)" level/bottom level of the interconnect structures of 3D memory device **200**.

According to some embodiments, contacts **246** and interconnect contacts **248** can be formed in a single contact forming process, such as in a dual damascene process for forming Cu contacts. Nevertheless, as illustrated in FIG. **13**, the interconnect structures including local contacts and contacts **246** and **248** can be formed in a limited number of fabrication steps to reduce the fabrication complexity and cost.

Various embodiments in accordance with the present disclosure provide a 3D memory device with interconnect structures for a memory array. The interconnect structures allow contacts for various memory array structures (e.g., NAND strings, gate line slits, WLs, etc.) to be fabricated in a limited number of operations (e.g., in a single operation or in two operations), thereby reducing the process complexity and manufacturing cost. In some embodiments, the interconnect structures disclosed herein can include bit lines in the top interconnect layer. These bit lines are suitable for 3D memory architectures in which the array device and the peripheral device are formed on different substrates and are subsequently joined by hybrid bonding in a face-to-face configuration.

Moreover, the interconnect structures disclosed herein include TACs for providing vertical interconnects between the stacked array device and peripheral device (e.g., for power bus and metal routing), thereby reducing the metal levels, improving the packing density and decrease the die size. In some embodiments, the TACs in the interconnect structures disclosed herein are formed in a dielectric structure that can be easily etched to form through holes therein compared to a stack of alternating dielectric layers or a stack of alternating conductor/dielectric layers. Therefore, fabrication complexity and cost can be reduced. The dielectric structure can be formed prior to the conversion of alternating layer stack of dielectrics to a conductor/dielectric layer stack.

In some embodiments, a 3D memory device includes a semiconductor substrate, an alternating layer stack disposed on the semiconductor substrate, and a dielectric structure, extending vertically through the alternating layer stack, on an isolation region of the substrate. Further, the alternating layer stack can abut a sidewall surface of the dielectric structure and the dielectric structure is formed of a dielectric material. The 3D memory device additionally can include one or more TACs that extend vertically through the dielectric and isolation region, and one or more channel structures that extend vertically through the alternating layer stack.

The 3D memory device further includes an epitaxial layer formed between each of the one or more channel structures and the semiconductor substrate, an etch stop plug disposed on each of the one or more channel structures, a staircase structure disposed in the alternating layer, and one or more contact layers disposed on the one or more TACs, channel structures, and slit structures.

In some embodiments, the dielectric structure abuts a sidewall surface of the TACs.

In some embodiments, the 3D memory device is a NAND 3D memory device.

In some embodiments, the alternating layer stack includes alternating pairs of a dielectric and conductor layers.

In some embodiments, the dielectric layer comprises silicon oxide and the conductor layer includes a metal.

In some embodiments, the conductor layers include a word line.

In some embodiments, the dielectric material is silicon oxide.

In some embodiment, the dielectric structure includes an oxide.

In some embodiment, the dielectric structure defines a through array contact region within the 3D memory device.

In some embodiments, an area of the dielectric structure is equal to or smaller than an area of the isolation region.

In some embodiments a method for forming 3D memory device includes forming an isolation structure on a substrate, disposing an alternating dielectric layer stack on the substrate, where the alternating dielectric layer stack includes pairs of a first dielectric layer and a second dielectric layer different from the first dielectric layer. The method further includes forming a channel structure extending vertically in the alternating dielectric layer, forming an opening in the alternating dielectric layer stack, where the opening exposes the isolation structure. The method also includes filling the opening with a dielectric layer to form a dielectric structure as a TAC region of the 3D memory device, removing portions of the dielectric structure and the isolation structure until the substrate is exposed to form a TAC opening that vertically extends through the dielectric structure and the isolation structure, and filling the TAC opening with a conductor to form a TAC structure in the TAC region, wherein the TAC structure is in contact with the substrate.

In some embodiments, before forming the TAC opening the method further includes forming slit openings that expose a doped region of the substrate by extending vertically in the alternating dielectric layer, replacing the second dielectric layer through the one or more slit openings with a conductor layer to convert the alternating dielectric layer stack to an alternating dielectric/conductor layer stack, and filling the one or more slit openings with a conductor to form one or more slit structures extending vertically in the alternating dielectric/conductor layer stack.

In some embodiments, before forming a channel structure, performing a trim-etch process to form a staircase structure in the alternating dielectric layer stack.

In some embodiment, removing portions of the alternating dielectric layer stack includes performing a dry etch process.

In some embodiments, filling the opening with the dielectric layer includes depositing the dielectric layer with a chemical vapor deposition, a plasma-enhanced chemical vapor deposition, or a physical vapor deposition process.

In some embodiments, filling the opening with the dielectric layer includes forming an oxide.

In some embodiments, filling the opening with the dielectric layer includes forming a silicon oxide.

In some embodiments, the first dielectric layer includes an oxide and the second dielectric layer comprises a nitride.

In some embodiments, the first dielectric layer includes a silicon oxide and the second dielectric layer comprises a silicon nitride.

In some embodiments a method for forming a 3D memory device includes disposing an alternating dielectric layer stack on a substrate, where the alternating dielectric layer stack includes pairs of a first dielectric layer and a second dielectric layer different from the first dielectric layer; forming channel structures extending vertically through the alternating dielectric layer; etching the alternating dielectric layer stack to form an opening, where the opening exposes an isolation region in the substrate; filling the opening with a dielectric layer to form a dielectric structure as a TAC region that is equal or smaller than the isolation region; etching through the dielectric structure and the isolation region to form TAC openings that expose the substrate; and filling the TAC openings with a conductor to form TAC structures in the TAC region.

In some embodiments a method for forming a 3D memory device further includes forming slit openings extending vertically through the alternating dielectric layer, where the slit openings expose a doped region of the substrate. The method further includes replacing the second dielectric layer through the slit openings with a conductor layer to convert the alternating dielectric layer stack to an alternating dielectric/conductor layer stack, filling the slit openings with a conductor to form slit structures, forming a staircase structure in the alternating dielectric layer stack, where the staircase structure comprises levels. Further the method includes, forming a world line contact on each of the levels of the staircase structure, forming local contacts over the channel and slit structures, and forming one or more contact layers over the local contacts, each word line, and each TAC structure.

In some embodiments, forming the opening in the alternating dielectric layer stack includes performing a dry etch process.

In some embodiments, the alternating dielectric/conductor layer stack abuts a sidewall of the dielectric structure.

In some embodiments, the dielectric structure abuts a sidewall surface of each TAC structure.

In some embodiments, a 3D memory device includes a substrate with an isolation structure; an alternating conductor/dielectric layer stack disposed on the substrate; a dielectric structure extending vertically through the alternating conductor/dielectric layer stack over the isolation structure, where the alternating conductor/dielectric layer stack abuts a sidewall surface of the dielectric structure and the dielectric structure is formed of a dielectric material; channel structures extending vertically through the alternating conductor/dielectric layer stack; and through array contacts extending vertically through the dielectric and the isolation structures.

In some embodiments, a 3D memory device further includes a staircase structure disposed in the alternating conductor/dielectric layer stack, where the staircase structures includes levels with each level having a conductor layer thereon; a word line contact disposed on each conductor layer of the staircase structure; and a local contact disposed on each channel structure and slit structure.

In some embodiments, the dielectric structure abuts a sidewall of the each TAC.

In some embodiments, the dielectric structure includes a through array contact region of the 3D memory device.

The foregoing description of the specific embodiments will so fully reveal the general nature of the present disclosure that others can, by applying knowledge within the skill of the art, readily modify and/or adapt for various applications such specific embodiments, without undue experimentation, without departing from the general concept of the present disclosure. Therefore, such adaptations and modifications are intended to be within the meaning and range of equivalents of the disclosed embodiments, based on the teaching and guidance presented herein. It is to be understood that the phraseology or terminology herein is for the purpose of description and not of limitation, such that the terminology or phraseology of the present specification is to be interpreted by the skilled artisan in light of the teachings and guidance.

Embodiments of the present disclosure have been described above with the aid of functional building blocks illustrating the implementation of specified functions and

relationships thereof. The boundaries of these functional building blocks have been arbitrarily defined herein for the convenience of the description. Alternate boundaries can be defined so long as the specified functions and relationships thereof are appropriately performed.

The Summary and Abstract sections may set forth one or more but not all exemplary embodiments of the present disclosure as contemplated by the inventor(s), and thus, are not intended to limit the present disclosure and the appended claims in any way.

The breadth and scope of the present disclosure should not be limited by any of the above-described exemplary embodiments, but should be defined only in accordance with the following claims and their equivalents.

What is claimed is:

1. A three-dimensional (3D) memory device, comprising:

a semiconductor substrate;

an alternating layer stack disposed on the semiconductor substrate;

a dielectric structure on an isolation region of the substrate and extending vertically through the alternating layer stack, wherein the alternating layer stack abuts a sidewall surface of the dielectric structure and the dielectric structure is formed of a dielectric material;

one or more through array contacts (TACs) extending vertically through the dielectric structure and the isolation region;

one or more channel structures extending vertically through the alternating layer stack;

an epitaxial layer between the one or more channel structures and the semiconductor substrate;

an etch stop plug on each of the one or more channel structures;

a staircase structure in the alternating layer;

slit structures extending vertically in the alternating layer stack; and

one or more contact layers on the one or more TACs, the one or more channel structures, and the slit structures.

2. The 3D memory device of claim **1**, wherein the dielectric structure abuts a sidewall surface of the TACs.

3. The 3D memory device claim **1**, wherein the 3D memory device is a NAND 3D memory device.

4. The 3D memory device of claim **1**, wherein the alternating layer stack comprises alternating pairs of a dielectric and a conductor layer.

5. The 3D memory device of claim **1**, wherein the dielectric material is silicon oxide.

6. The 3D memory device of claim **1**, wherein the dielectric structure comprises an oxide.

7. The 3D memory device of claim **1**, wherein the dielectric structure defines a through array contact region within the 3D memory device.

8. The 3D memory device of claim **1**, wherein the dielectric structure has a footprint equal to or smaller than the isolation region.

9. A method for forming a 3D memory device, the method comprising:

forming an isolation structure on a substrate;

disposing an alternating dielectric layer stack on the substrate, the alternating dielectric layer stack comprising pairs of a first dielectric layer and a second dielectric layer different from the first dielectric layer;

disposing a staircase structure in the alternating dielectric layer stack, wherein the staircase structure comprises levels with each level having a conductor layer thereon;

forming a channel structure extending vertically in the alternating dielectric layer stack;

disposing a word line contact on the conductor layer of the each level of the staircase structure;

forming one or more slit structures extending vertically in the alternating dielectric layer stack;

forming an opening in the alternating dielectric layer stack, wherein the opening exposes the isolation structure;

filling the opening with a dielectric layer to form a dielectric structure as a through array contact (TAC) region of the 3D memory device;

removing portions of the dielectric structure and the isolation structure until the substrate is exposed to form a TAC opening that vertically extends through the dielectric structure and the isolation structure;

filling the TAC opening with a conductor to form a TAC structure in the TAC region, wherein the TAC structure is in contact with the substrate; and

disposing a local contact on the channel structure, the one or more slit structures, and the TAC structure.

10. The method of claim **9**, wherein the forming one or more slit structures comprises;

forming slit openings extending vertically in the alternating dielectric layer stack, wherein the slit openings expose a doped region of the substrate;

replacing the second dielectric layer through the one or more slit openings with the conductor layer to convert the alternating dielectric layer stack to an alternating dielectric/conductor layer stack; and

filling the one or more slit openings with a conductor.

11. The method of claim **9**, wherein the disposing the staircase structure comprises performing a trim-etch process in the alternating dielectric layer stack before forming the channel structure.

12. The method of claim **9**, wherein filling the opening with the dielectric layer comprises depositing the dielectric layer with a chemical vapor deposition, a plasma-enhanced chemical vapor deposition, or a physical vapor deposition process.

13. The method of claim **9**, wherein filling the opening with the dielectric layer comprises forming an oxide.

14. The method of claim **9**, wherein the first dielectric layer comprises an oxide and the second dielectric layer comprises a nitride.

15. A three-dimensional (3D) memory device, comprising:

a substrate with an isolation structure;

an alternating conductor/dielectric layer stack disposed on the substrate;

a dielectric structure on the isolation structure and extending vertically through the alternating conductor/dielectric layer stack, wherein the alternating conductor/dielectric layer stack abuts a sidewall surface of the dielectric structure and the dielectric structure is formed of a dielectric material;

channel structures and slit structures extending vertically through the alternating conductor/dielectric layer stack;

a staircase structure disposed in the alternating conductor/dielectric layer stack, wherein the staircase structure comprises levels with each level having a conductor layer thereon;

a word line contact disposed on the conductor layer of the each level;

local contacts disposed on the channel structures and the slit structures; and

through array contacts (TACs) extending vertically through the dielectric and the isolation structures.

16. The 3D memory device of claim **15**, wherein the dielectric structure abuts a sidewall of each TAC of the TACs.

17. The 3D memory device of claim **15**, wherein the dielectric structure comprises a through array contact region of the 3D memory device.

18. The 3D memory device of claim **15**, further comprising:

an etch stop plug interposed between each local contact of the local contacts and each channel structure of the channel structures; and

an epitaxial layer disposed between the channel structures and the substrate.

19. The 3D memory device of claim **15**, wherein the dielectric material comprises silicon oxide.

20. The 3D memory device of claim **15**, wherein the TACs comprise a conductive material.

* * * * *