US008697519B2

(12) **United States Patent**
Jee et al.

(10) **Patent No.: US 8,697,519 B2**
(45) **Date of Patent: Apr. 15, 2014**

(54) **METHOD OF MANUFACTURING A SEMICONDUCTOR DEVICE WHICH INCLUDES FORMING A SILICON LAYER WITHOUT VOID AND CUTTING ON A SILICON MONOLAYER**

(75) Inventors: **Junggeun Jee**, Seoul (KR); **Woosung Lee**, Yongin-si (KR)

(73) Assignee: **Samsung Electronics Co., Ltd.**, Suwon-Si (KR)

(*) Notice: Subject to any disclaimer, the term of this patent is extended or adjusted under 35 U.S.C. 154(b) by 0 days.

(21) Appl. No.: **13/567,320**

(22) Filed: **Aug. 6, 2012**

(65) **Prior Publication Data**

US 2013/0095622 A1 Apr. 18, 2013

(30) **Foreign Application Priority Data**

Oct. 18, 2011 (KR) 10-2011-0106459

(51) **Int. Cl.**
H01L 21/336 (2006.01)

(52) **U.S. Cl.**
USPC **438/270**; 257/E21.41

(58) **Field of Classification Search**
USPC 438/270; 257/E21.41
See application file for complete search history.

(56) **References Cited**

U.S. PATENT DOCUMENTS

5,153,813	A *	10/1992	Oehrlein et al.	361/313
5,160,987	A *	11/1992	Pricer et al.	257/307
6,027,968	A *	2/2000	Nguyen et al.	438/254
6,624,018	B1 *	9/2003	Yu et al.	438/239
7,476,614	B2 *	1/2009	Kwak et al.	438/639
7,994,011	B2 *	8/2011	Park et al.	438/287
8,492,874	B2 *	7/2013	Lan et al.	257/534
2011/0291175	A1	12/2011	Jee et al.	

FOREIGN PATENT DOCUMENTS

JP	2009-267285	11/2009
KR	1020050066188	6/2005
KR	1020070055899	5/2007
KR	1020100079797	7/2010
KR	20110129079	12/2011
WO	2007061273	5/2007

* cited by examiner

Primary Examiner — William D Coleman
(74) *Attorney, Agent, or Firm* — F. Chau & Associates, LLC

(57) **ABSTRACT**

Methods of manufacturing a semiconductor device are provided. Patterns having a recess region defined therebetween are formed on a substrate, and then a silicon precursor having an organic ligand is provided on the substrate to absorb silicon on sidewalls and a bottom surface of the recess region to form a silicon monolayer on the patterns having the recess region defined therebetween. A silicon layer without void and cutting is formed on the silicon monolayer.

20 Claims, 25 Drawing Sheets

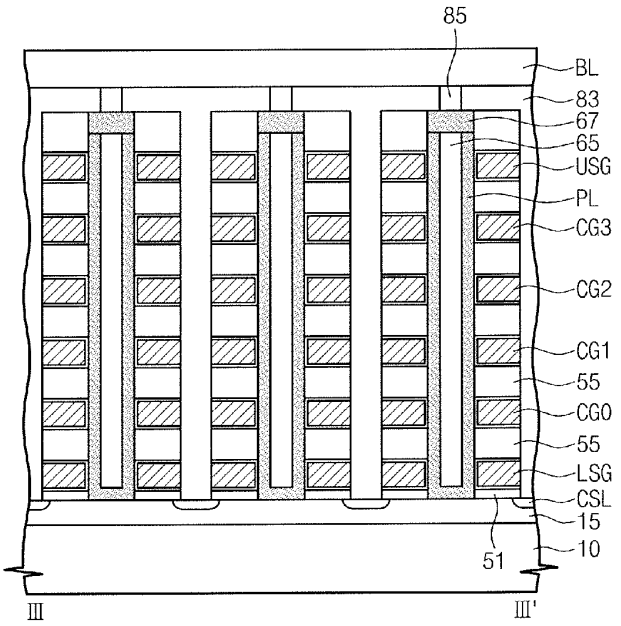

Fig. 1

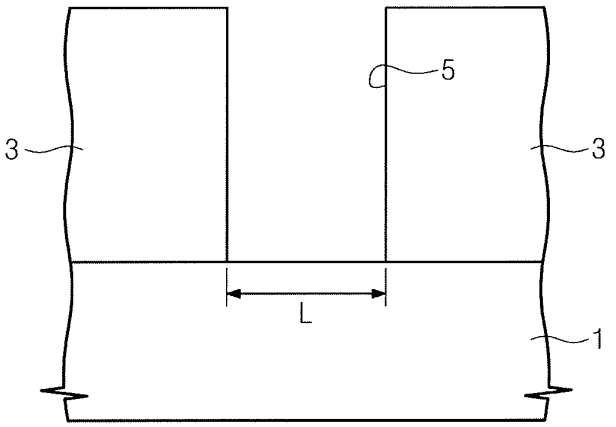

Fig. 2

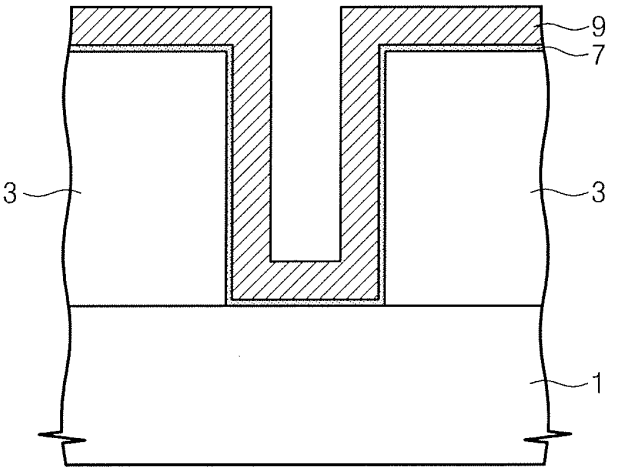

Fig. 3

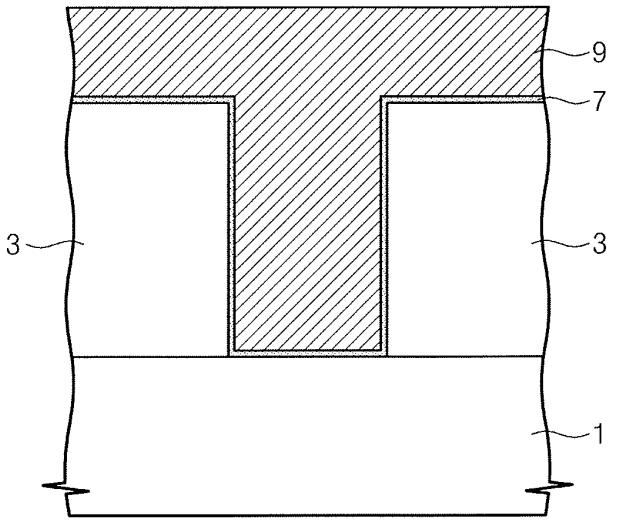

Fig. 4

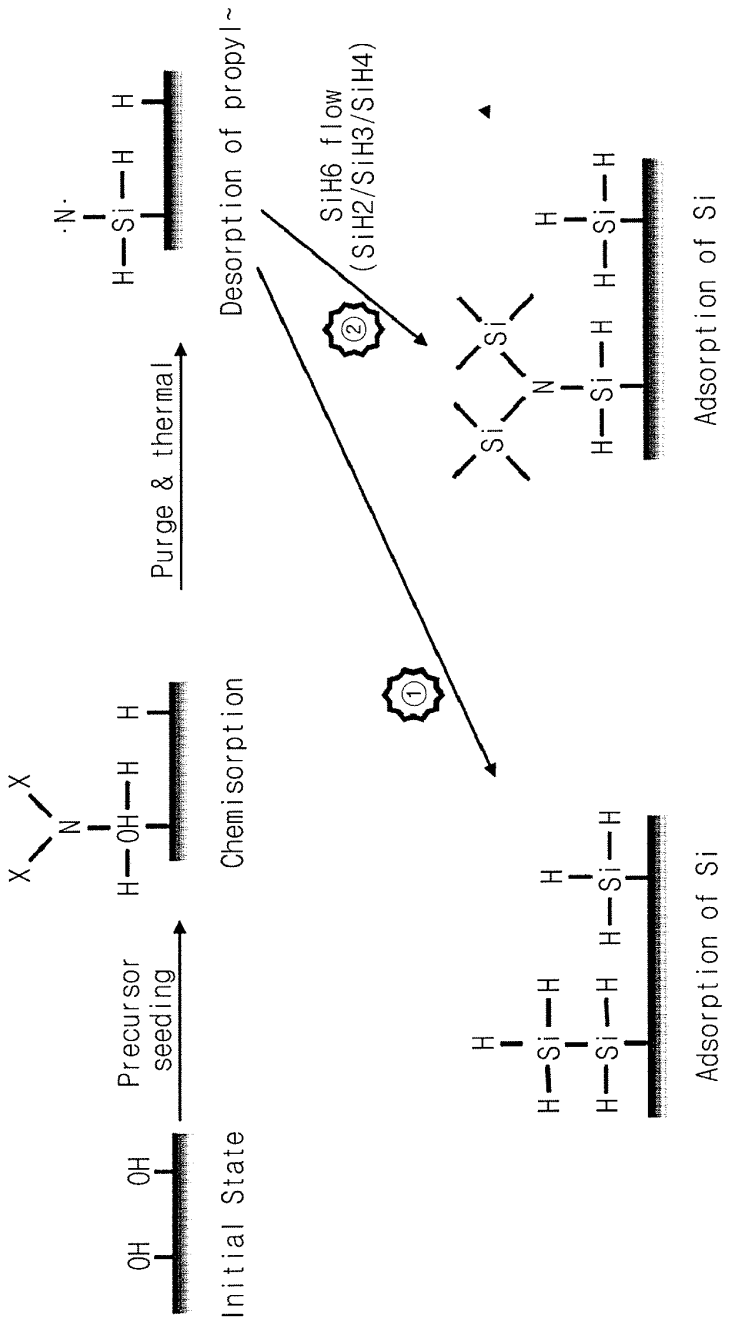
Initial State
Precursor seeding
Chemisorption
Purge & thermal
Desorption of propyl~
SiH6 flow
(SiH2/SiH3/SiH4)
Adsorption of Si
Adsorption of Si

Fig. 5

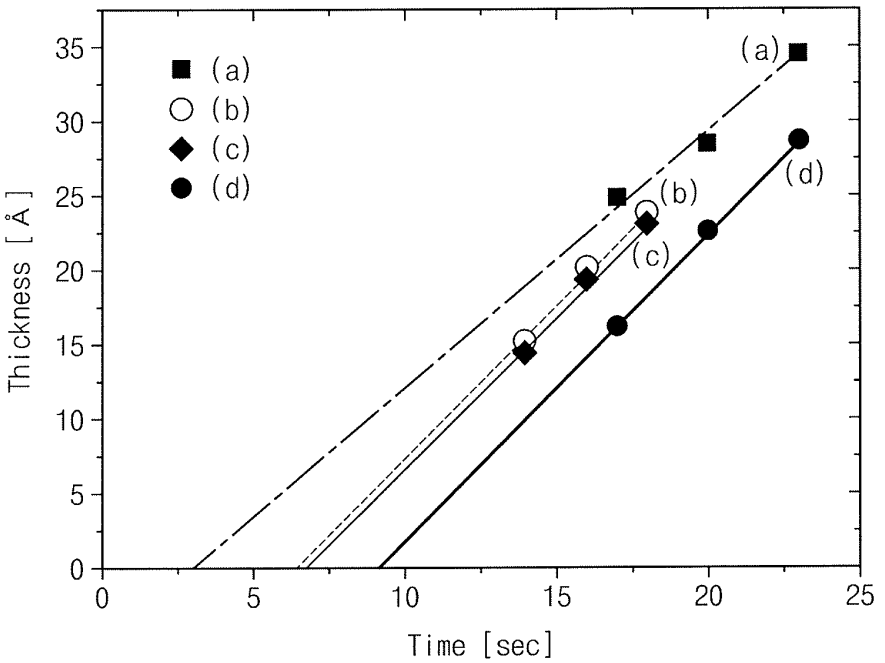

Fig. 6

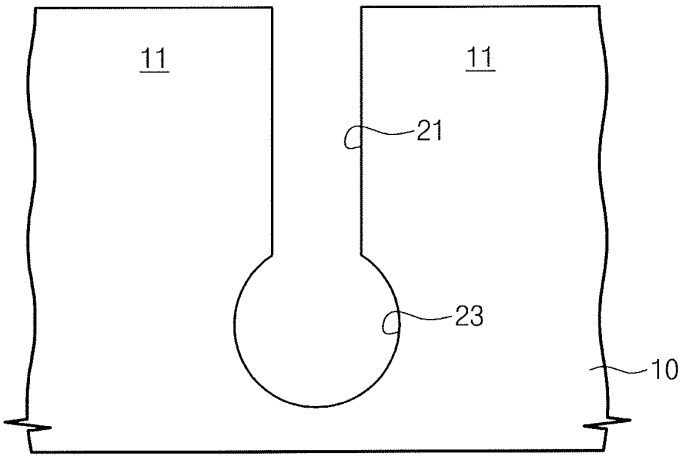

Fig. 7

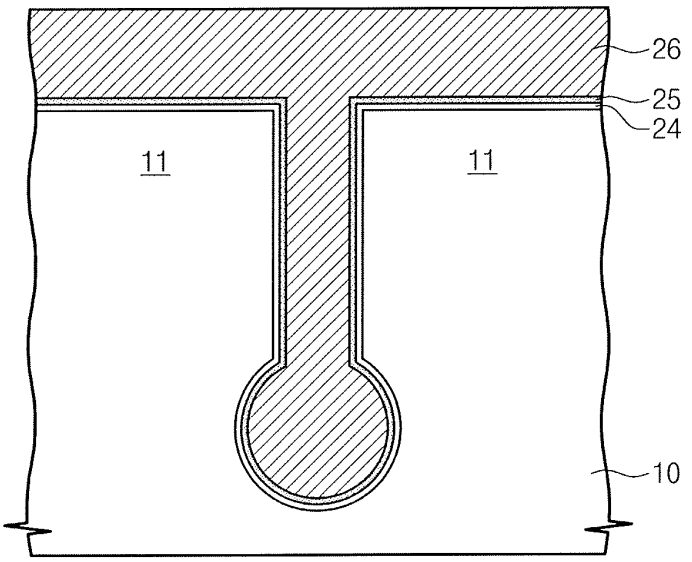

Fig. 8

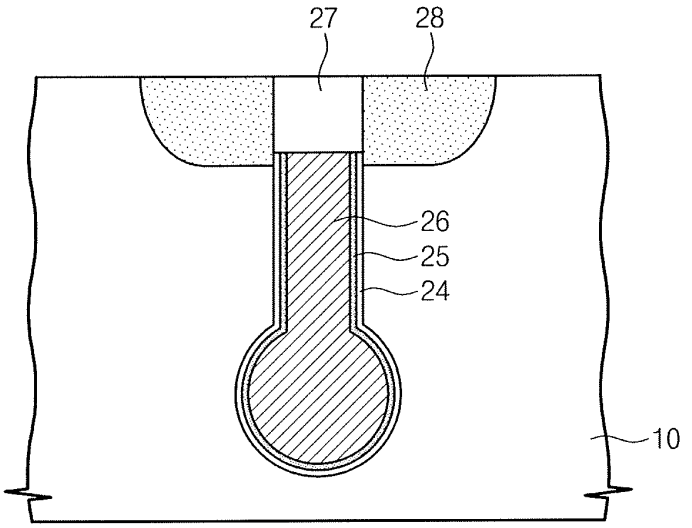

Fig. 9

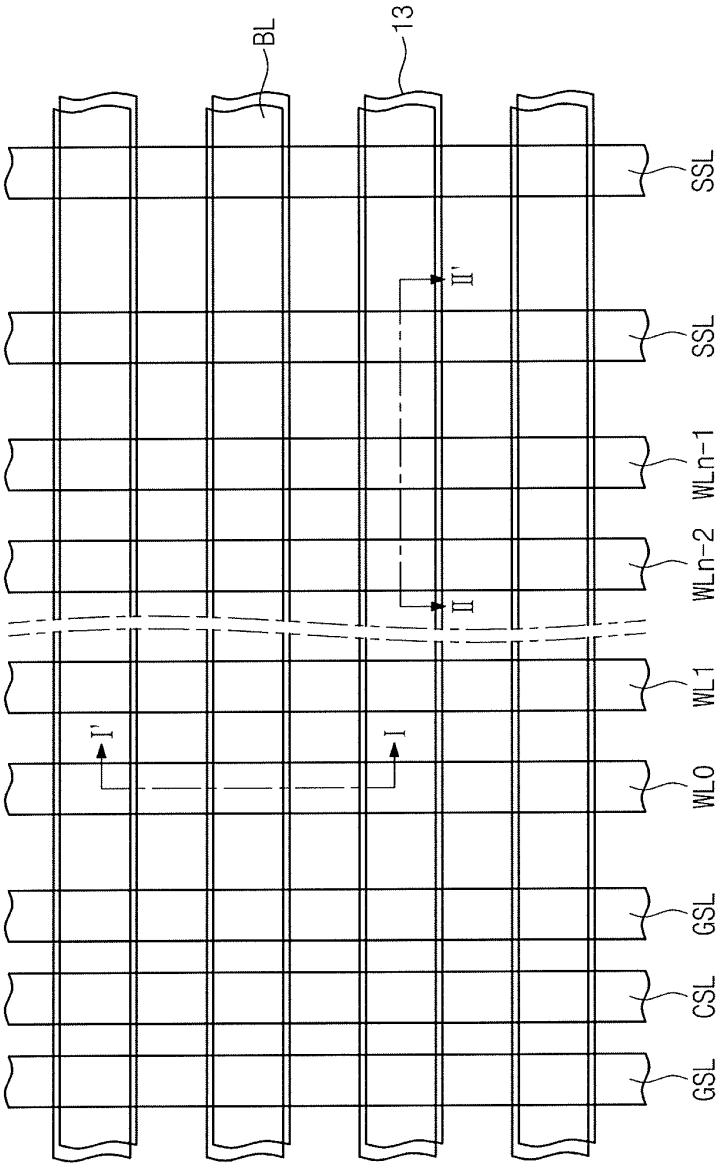

Fig. 10

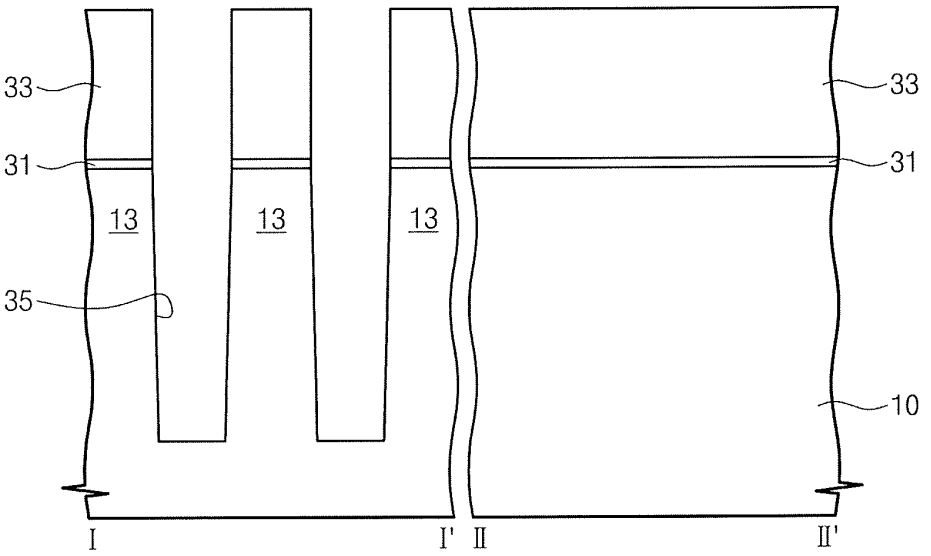

Fig. 11

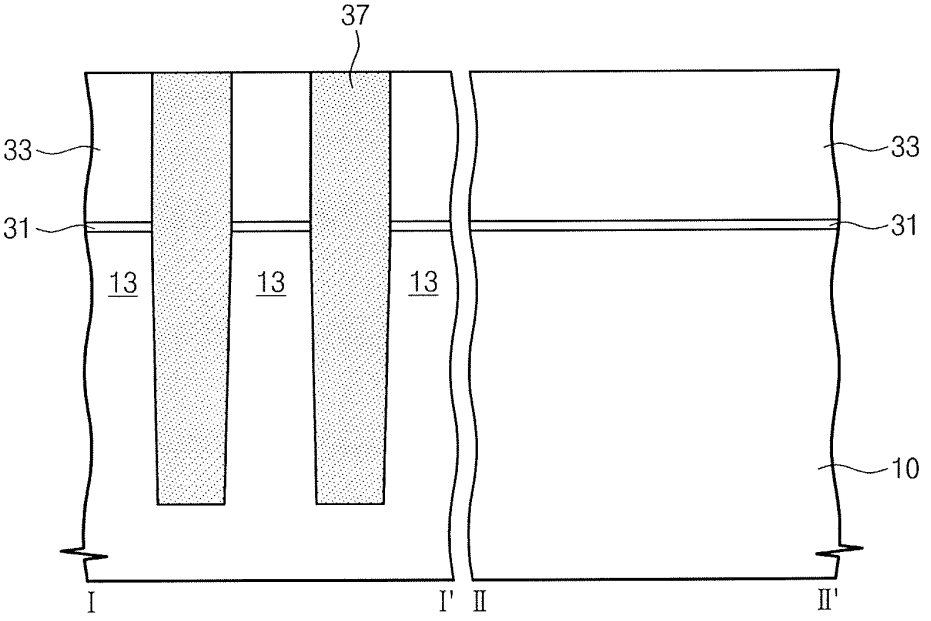

Fig. 12

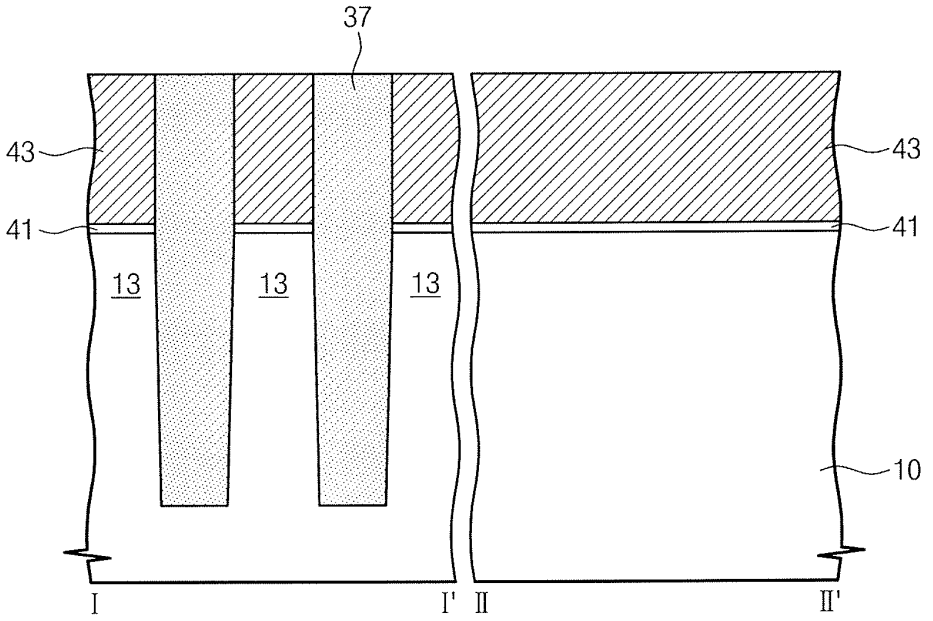
37
43
43
41
41
13
13
13
10
I
I'
II
II'

Fig. 13

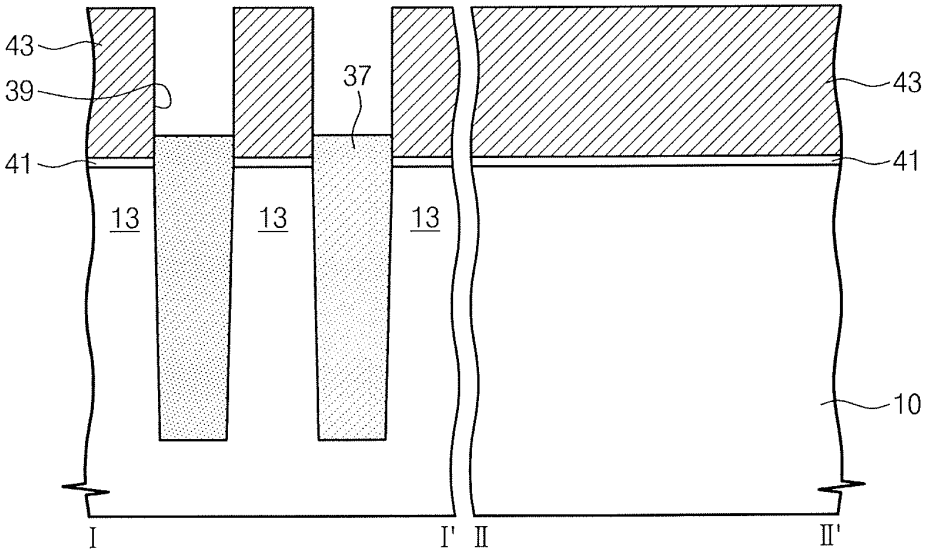
43
39
37
43
41
41
13
13
13
10
I
I'
II
II'

Fig. 14

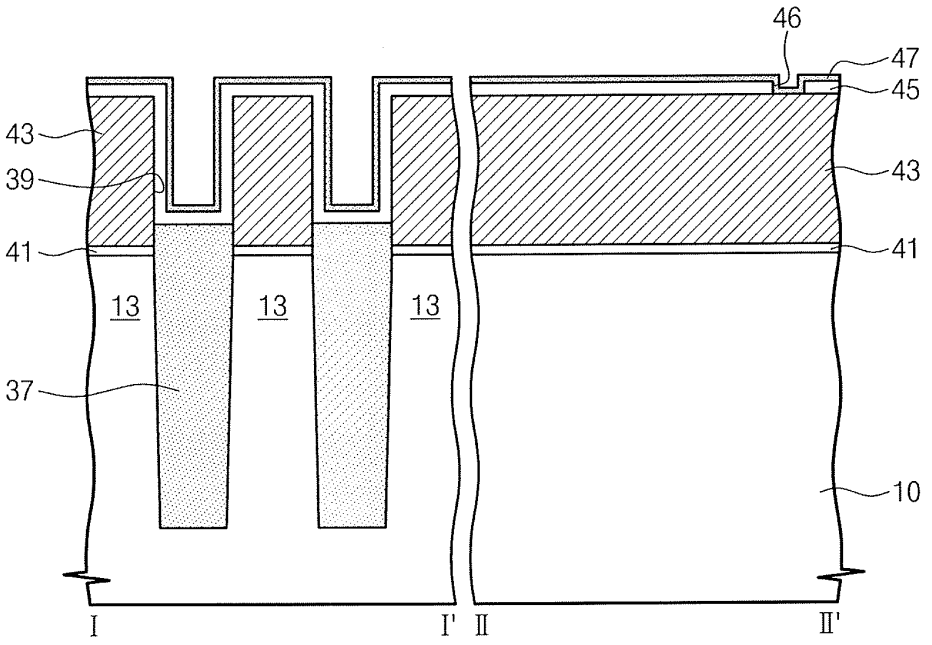

Fig. 15

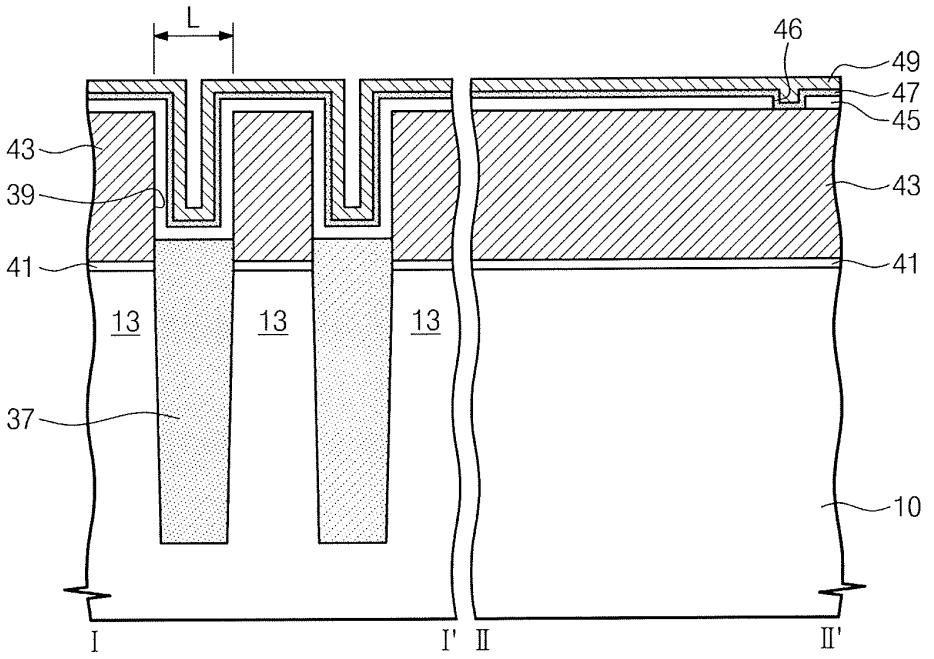

Fig. 16

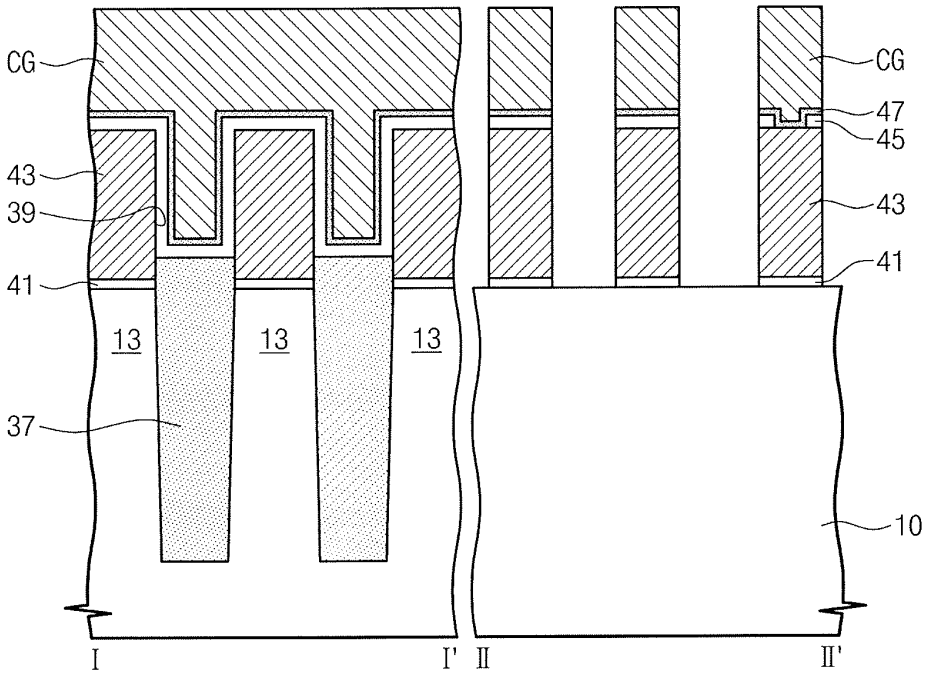

Fig. 17

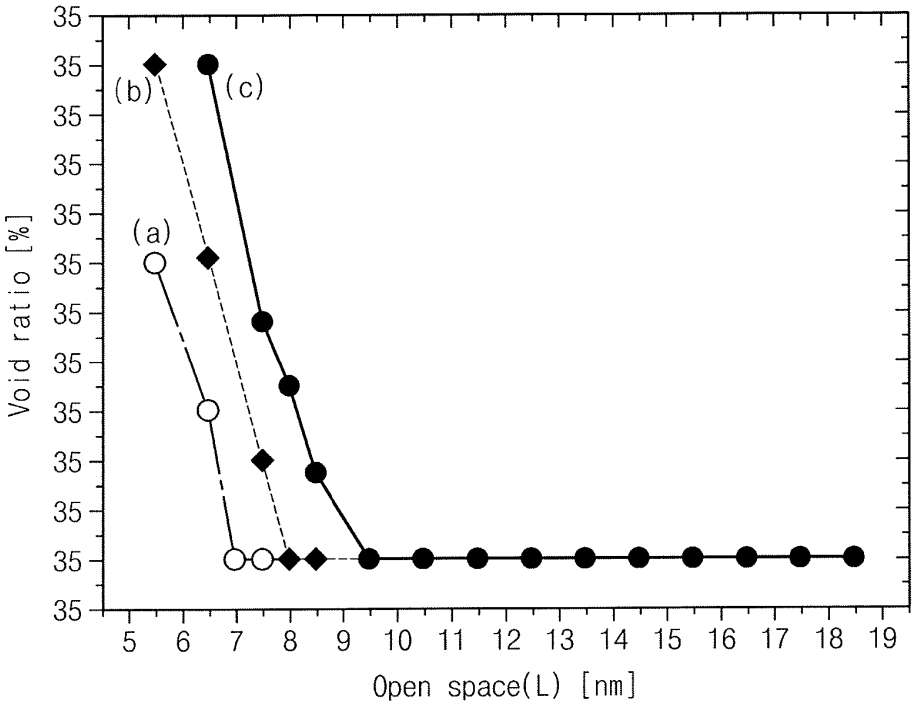
Void ratio [%]
35
(a)
(b)
(c)
5 6 7 8 9 10 11 12 13 14 15 16 17 18 19
Open space(L) [nm]

Fig. 18A

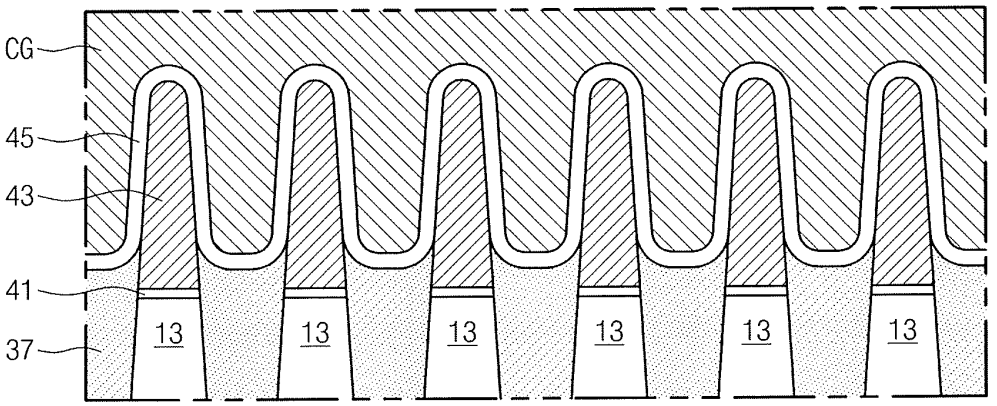

Fig. 18B

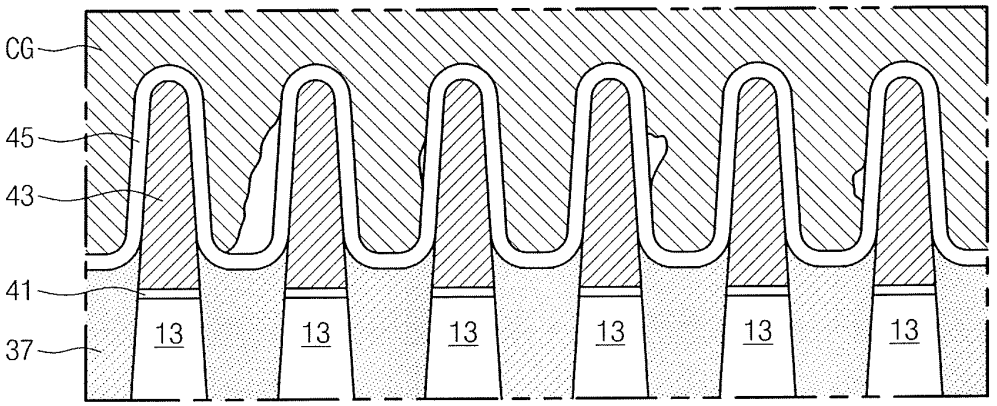

Fig. 19

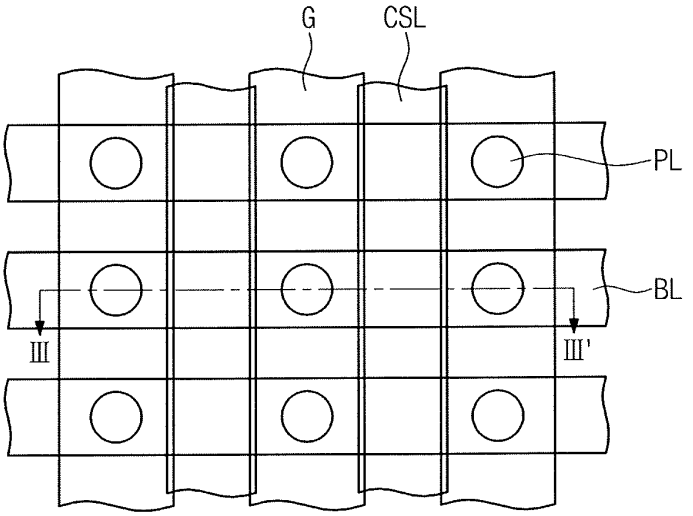

Fig. 20

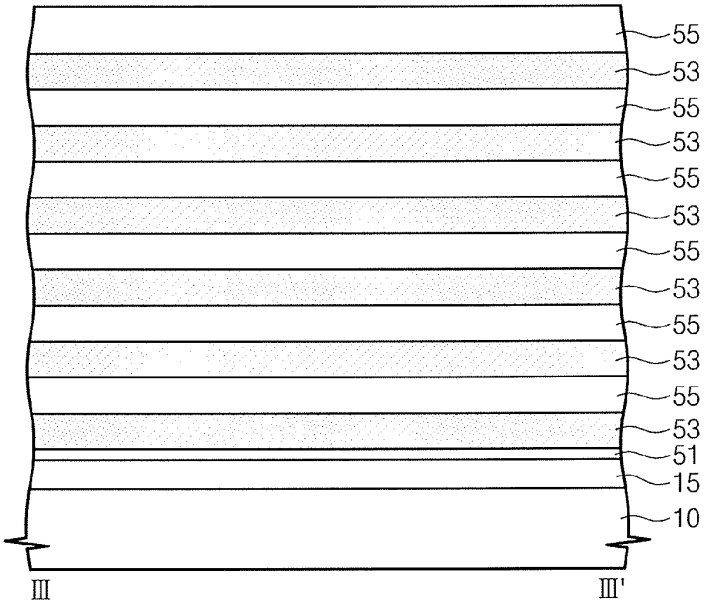
55
53
55
53
55
53
55
53
55
53
55
53
51
15
10
III
III'

Fig. 21

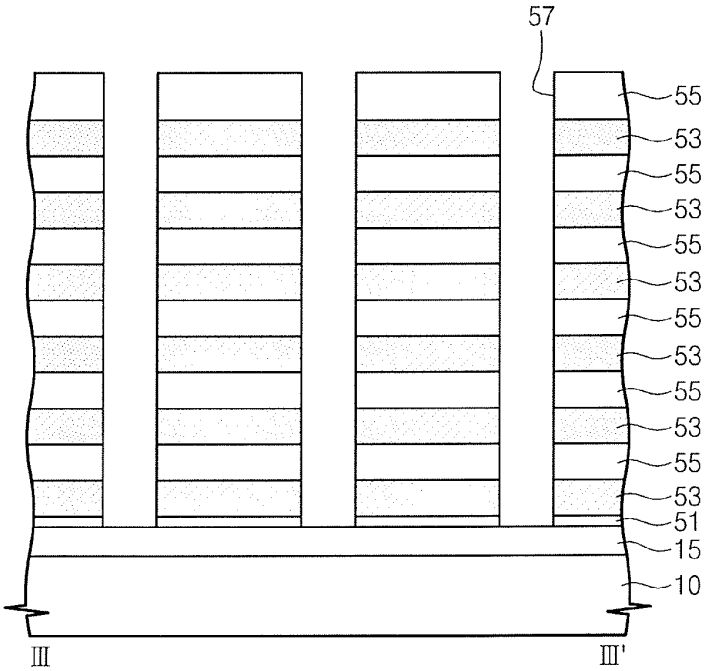
57
55
53
55
53
55
53
55
53
55
53
55
53
51
15
10
III
III'

Fig. 22

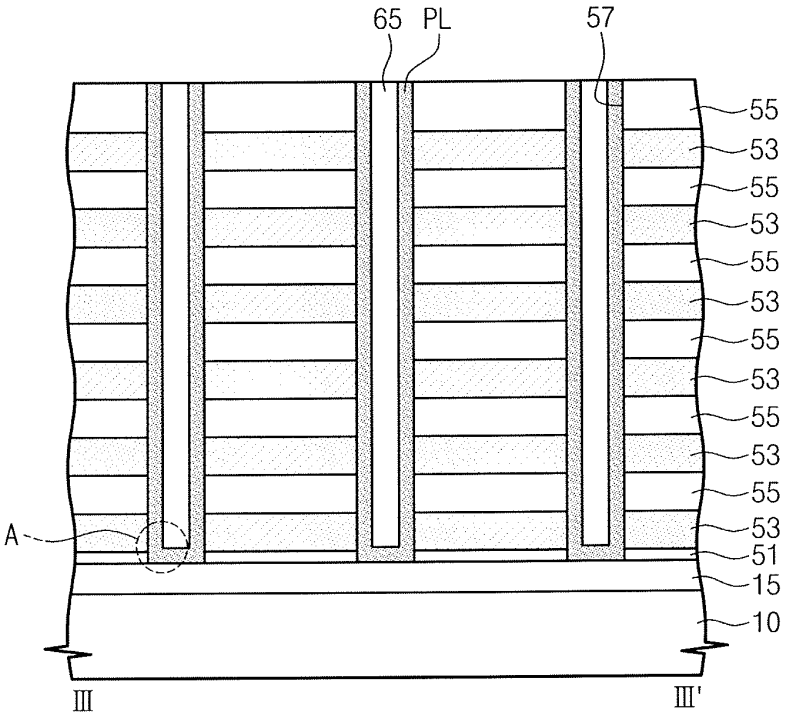
65
PL
57
55
53
55
53
55
53
55
53
55
53
55
53
A
51
15
10
III
III'

Fig. 23

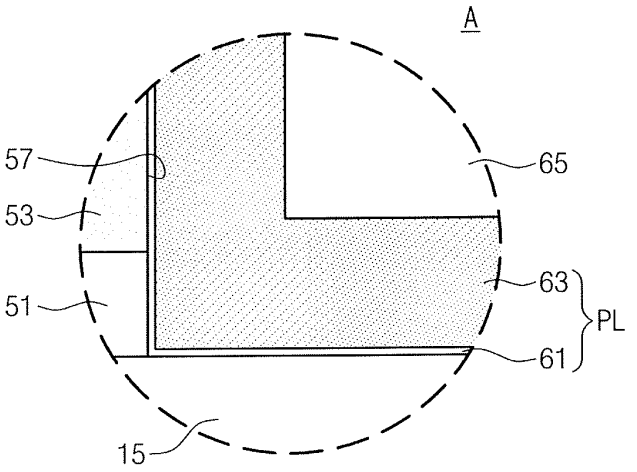
A
57
65
53
63
51
PL
61
15

Fig. 24

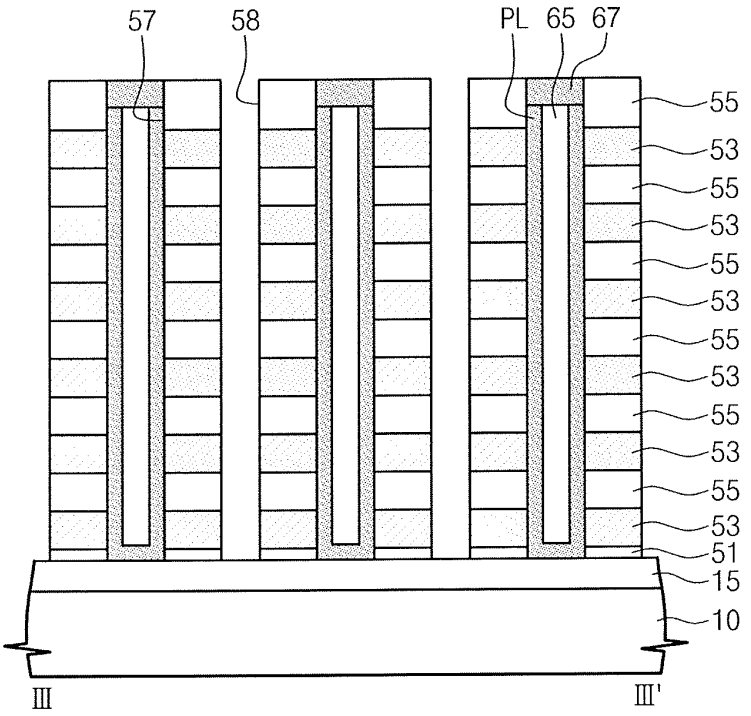

Fig. 25

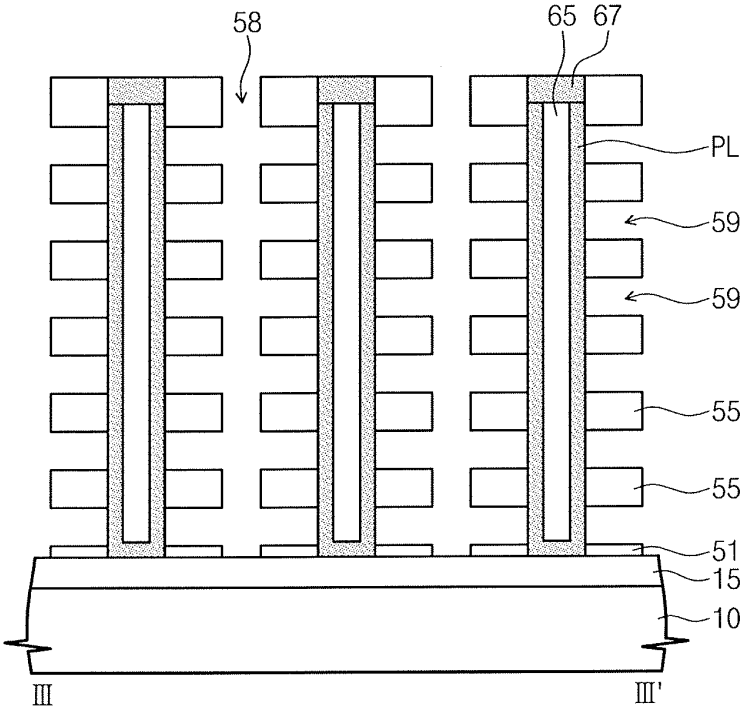

Fig. 26

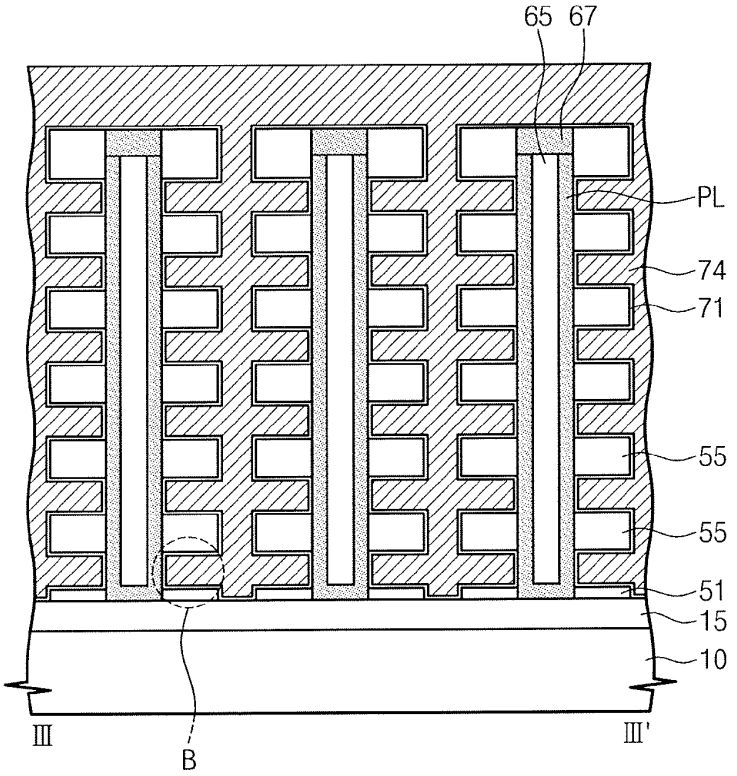

Fig. 27

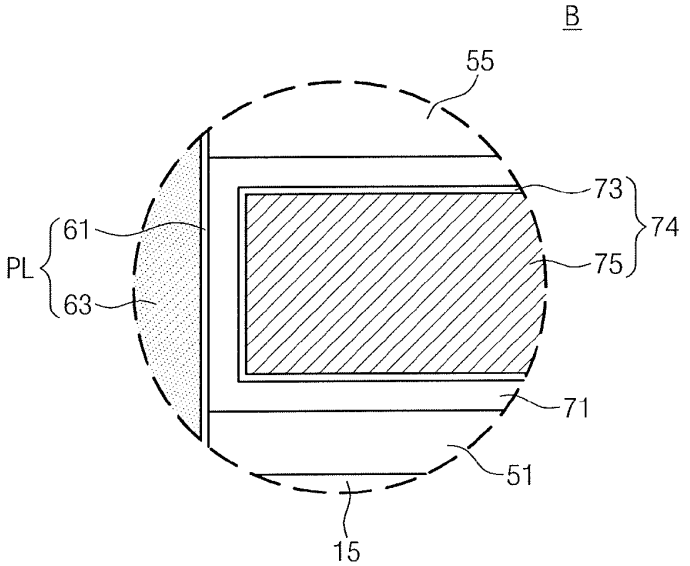

Fig. 28

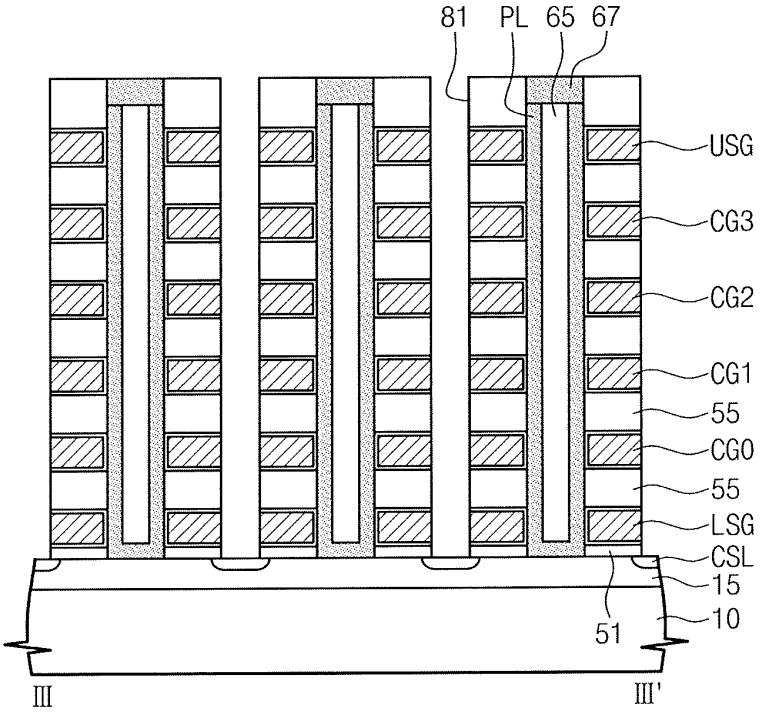

Fig. 29

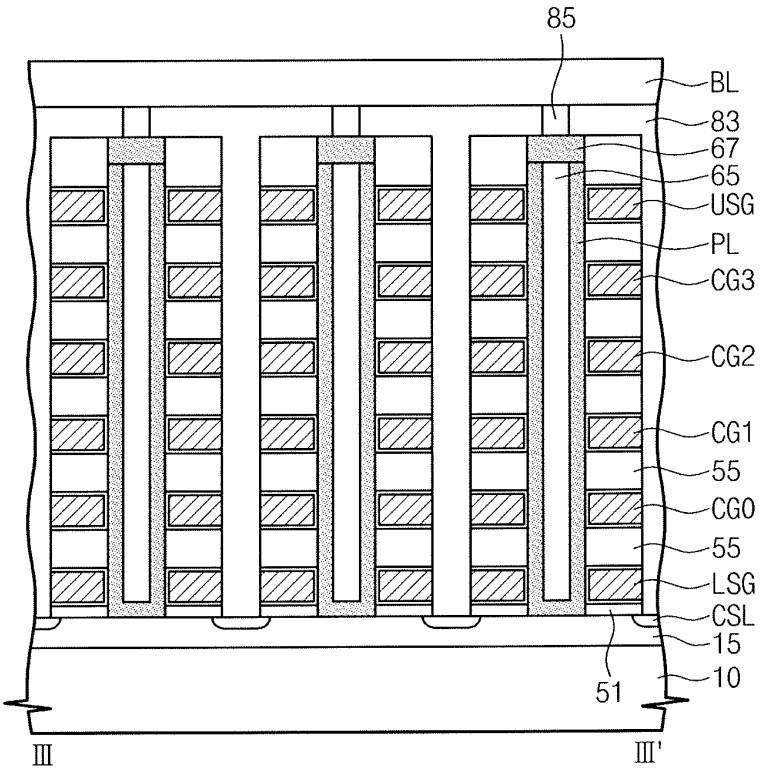

Fig. 30

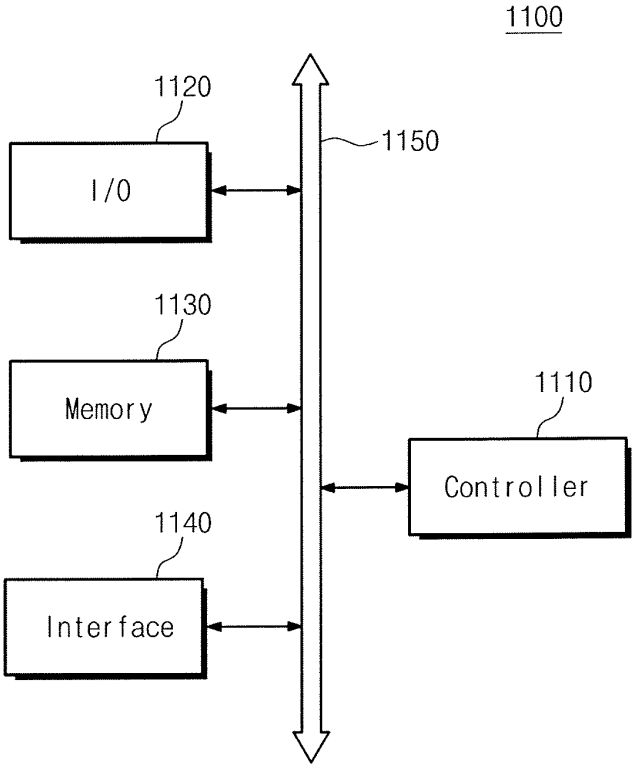
1100
1120
I/O
1150
1130
Memory
1110
Controller
1140
Interface

Fig. 31

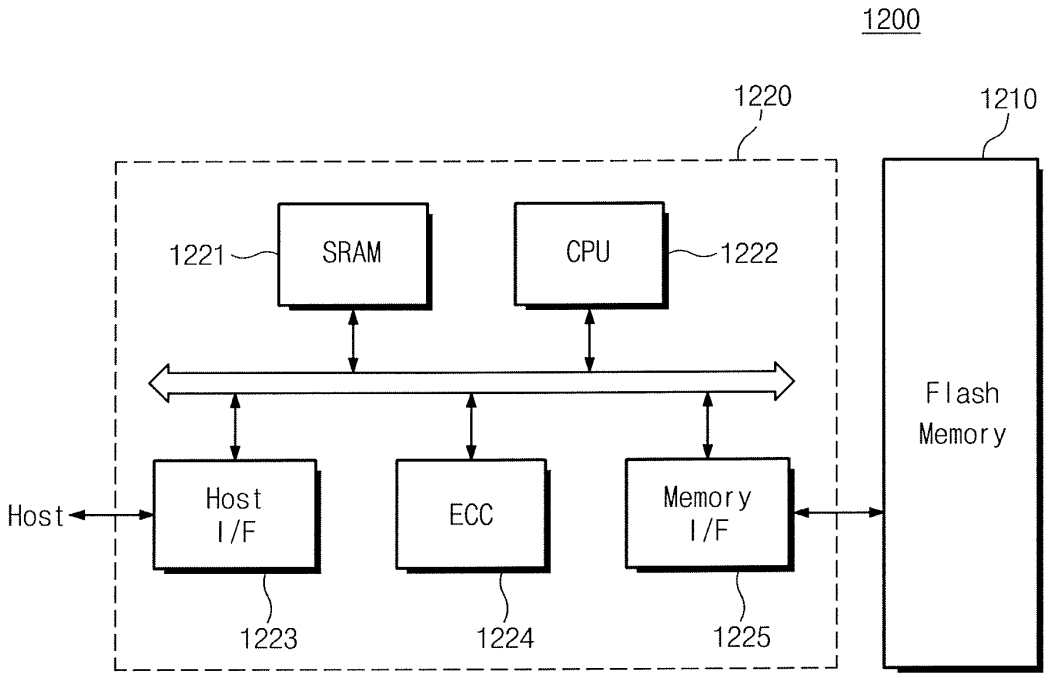
1200
1220
1210
1221
SRAM
CPU
1222
Flash
Memory
Host
Host
I/F
ECC
Memory
I/F
1223
1224
1225

Fig. 32

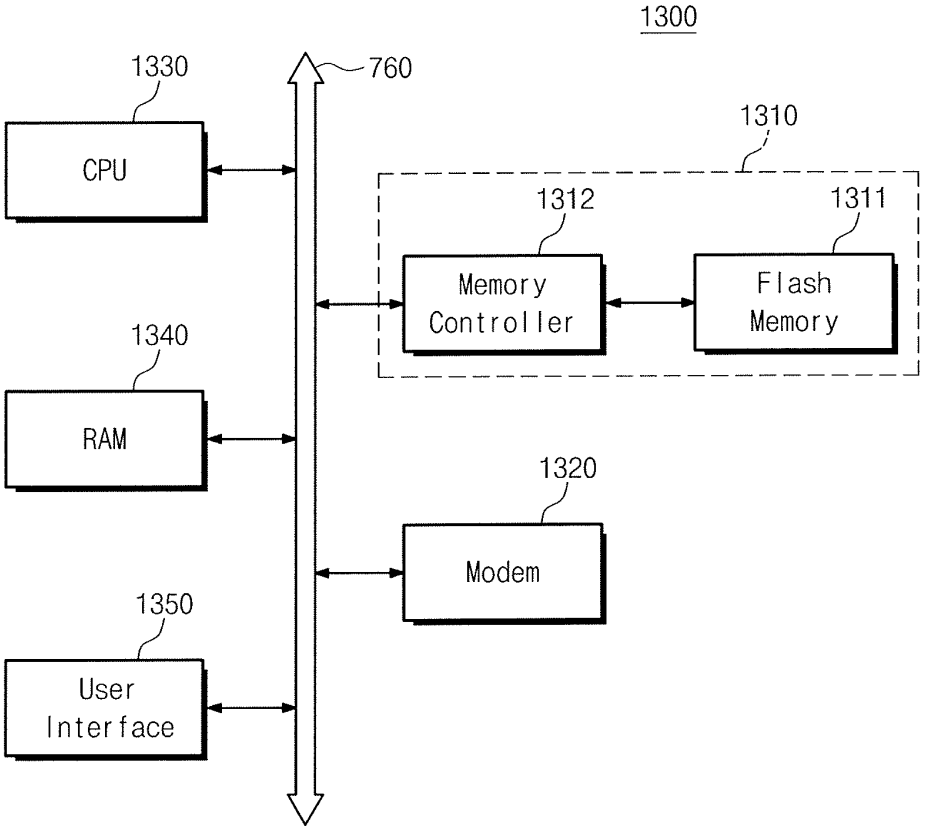
1300
1330
760
CPU
1310
1312
1311
Memory Controller
Flash Memory
1340
RAM
1320
Modem
1350
User Interface

METHOD OF MANUFACTURING A SEMICONDUCTOR DEVICE WHICH INCLUDES FORMING A SILICON LAYER WITHOUT VOID AND CUTTING ON A SILICON MONOLAYER

CROSS-REFERENCE TO RELATED APPLICATIONS

This U.S. non-provisional patent application claims priority under 35 U.S.C. §119 to Korean Patent Application No. 10-2011-0106459, filed on Oct. 18, 2011, the disclosure of which is hereby incorporated by reference herein in its entirety.

BACKGROUND

The present disclosure relates to methods of manufacturing a semiconductor device and, more particularly, to methods of manufacturing a semiconductor device including a silicon layer formed in a recess region.

As the semiconductor industry becomes more developed, high integration, low power consumption, and/or high speed of semiconductor devices have been increasingly demanded. Line widths and spaces of various patterns constituting the semiconductor devices have been reduced for satisfying the various characteristics of the semiconductor devices. In other words, as the semiconductor devices are becoming more highly integrated, an aspect ratio between the patterns are also being increased. Thus, as a result, the characteristics of the semiconductor devices may be deteriorated or operational performance difficulties of the semiconductor devices may be caused.

SUMMARY

Exemplary embodiments of the inventive concept may provide methods of manufacturing a semiconductor device capable of filling a recess region between narrow patterns with a silicon layer without void and cutting.

In an exemplary embodiment of the present invention, a method of manufacturing a semiconductor device may include: forming a plurality of patterns having a recess region defined therebetween on a substrate, forming a silicon monolayer on the patterns having the recess region defined therebetween by providing a silicon precursor having an organic ligand on the substrate to absorb silicon on sidewalls and a bottom surface of the recess region and forming a silicon layer without void and cutting on the silicon monolayer.

In an exemplary embodiment, a space between the sidewalls of the recess region may be no greater than about 10 nm.

In an embodiment, the silicon precursor having the organic ligand may be one of $H_3SiN(CH(CH_3)_2)_2$, $H_2Si(N(C_2H_5)_2)_2$, $H_2Si(NHC(CH_3)_3)_2$, or $H_2Si(N(C_2H_5)(CH_3))_2$.

In an embodiment, the forming of the silicon monolayer may be performed at a substrate temperature of no greater than about 500 degrees Celsius.

In an embodiment, the forming of the patterns may include: forming a plurality of device isolation members on the substrate to define a plurality of active regions, sequentially forming a tunnel insulating layer and a floating gate on each of the active regions. The top surfaces of the device isolation members are lower than top surfaces of the floating gates. The method further includes forming an intergate insulating layer on the floating gates, and the intergate insulating layer extends onto the top surface of the device isolation members.

In an embodiment, the recess region may be provided between the floating gates, and the silicon layer without void and cutting may fill the recess region between the floating gates.

In an embodiment, the intergate insulating layer may have an opening exposing one of the floating gates, the silicon monolayer may be formed along a profile of the opening, and the silicon layer may be formed to fill the opening without void and cutting.

In an embodiment, the forming of the patterns may include etching the substrate to form the recess region in the substrate, and the silicon monolayer may be formed along a profile of the sidewalls and the bottom surface of the recess region.

In an embodiment, the silicon layer may fill a lower portion of the recess region. In this case, the method may further include: injecting dopant ions into regions of the substrate divided by the recess region to form source/drain regions.

In an embodiment, the forming of the patterns may further include: forming an undercut region extending from the recess region in a direction parallel to a top surface of the substrate. In this case, the silicon monolayer and the silicon layer may be formed along a profile of sidewalls of the recess region and the undercut region.

In an exemplary embodiment of the present invention, a method of manufacturing a semiconductor device may include: alternately stacking a plurality of first material layers and a plurality of second material layers on a substrate, forming a plurality of channel holes penetrating the first material layers and the second material layers, the channel holes exposing the substrate, forming a first silicon monolayer along a profile of the exposed substrate and sidewalls of the channel holes by providing a silicon precursor having an organic ligand on the substrate to absorb silicon on the sidewalls of the channel holes and the exposed substrate and forming a first silicon layer without void and cutting on the first silicon monolayer to form a plurality of active pillars.

In an embodiment, the method may further include: etching the first material layers and the second material layers to form a groove between the channel holes, selectively removing the first material layers exposed by the groove to form undercut regions exposing the active pillars and top surfaces and bottom surfaces of the second material layers, the undercut regions extend from the groove toward the active pillars, forming a data storing layer on the exposed active pillars and the exposed top surfaces and bottom surfaces of the second material layers, forming a second silicon monolayer on the data storing layer by providing a silicon precursor having an organic ligand on the data storing layer to absorb silicon on a surface of the data storing layer and forming a second silicon layer without void and cutting on the second silicon monolayer to fill the undercut regions.

In an exemplary embodiment of the present invention, a method for manufacturing a semiconductor device is provided. The method includes forming a groove in a substrate extending in a direction parallel to a top surface of the substrate, thereby defining a plurality of regions in the substrate which are divided by the groove, forming an undercut region extending from a lower area of the groove in the direction parallel to the top surface of the substrate, forming a gate insulating layer on sidewalls of the groove and sidewalls and a bottom surface of the undercut region, forming a seed layer of a silicon monolayer on the gate insulating layer by providing a silicon precursor including an organic ligand on the gate insulating layer to absorb silicon on a surface of the gate insulating layer.

The method further includes forming a silicon layer on the seed layer, wherein the silicon layer grows from the seed layer

of the silicon monolayer to fill the groove without void and cutting, removing a portion of the silicon layer and the seed layer in an upper portion of the groove, forming a capping layer in the upper portion of the groove and providing dopant ions into the regions of the substrate divided by the groove, thereby forming source/drain regions.

BRIEF DESCRIPTION OF THE DRAWINGS

Exemplary embodiments of the inventive concept can be understood in more detail from the following detailed description taken in conjunction with the attached drawings in which:

FIGS. **1** to **3** are cross-sectional views to explain an exemplary embodiment of the inventive concept;

FIG. **4** is a conceptual diagram to explain an exemplary embodiment of the inventive concept;

FIG. **5** is a graph illustrating the comparison of adsorption characteristics of silicon precursors according to an exemplary embodiment of the inventive concept;

FIGS. **6** to **8** are cross-sectional views illustrating a method of manufacturing a semiconductor device according to an exemplary embodiment of the inventive concept;

FIG. **9** is a layout of a semiconductor device according to an exemplary embodiment of the inventive concept;

FIGS. **10** to **16** are cross-sectional views taken along lines I-I' and II-II' of FIG. **9** to explain a method of manufacturing a semiconductor device according to an exemplary embodiment of the inventive concept;

FIG. **17** shows filling characteristics of silicon layers according to an exemplary embodiment of the inventive concept;

FIG. **18**A is a cross-sectional view illustrating control gates of a NAND flash memory according to an exemplary embodiment of the inventive concept;

FIG. **18**B is a cross-sectional view illustrating control gates of a NAND flash memory formed by a general deposition method;

FIG. **19** is a layout of a semiconductor device according to an exemplary embodiment of the inventive concept;

FIGS. **20** to **22**, **24** to **26**, **28**, and **29** are cross-sectional views illustrating a method of manufacturing a semiconductor device according to an exemplary embodiment of the inventive concept;

FIG. **23** is an enlarged view of a portion 'A' of FIG. **22**;

FIG. **27** is an enlarged view of a portion 'B' of FIG. **26**;

FIG. **30** is a schematic block diagram illustrating an example of memory systems including the semiconductor devices formed by an exemplary embodiment of the inventive concept;

FIG. **31** is a schematic block diagram illustrating an example of memory cards including the semiconductor devices formed by an exemplary embodiment of the inventive concept; and

FIG. **32** is a schematic block diagram illustrating an example of data processing systems including the semiconductor devices formed by an exemplary embodiment of the inventive concept.

DETAILED DESCRIPTION OF EXEMPLARY EMBODIMENTS

Exemplary embodiments of the inventive concept will now be described more fully hereinafter with reference to the accompanying drawings, in which exemplary embodiments of the inventive concept are shown. In the drawings, embodiments of the inventive concept are not limited to the specific examples provided herein and may exaggerated for clarity.

As used herein, the singular terms "a," "an" and "the" are intended to include the plural forms as well, unless the context clearly indicates otherwise. As used herein, the term "and/or" includes any and all combinations of one or more of the associated listed items. It will be understood that when an element is referred to as being "connected" or "coupled" to another element, it may be directly connected or coupled to the other element or intervening elements may be present.

Similarly, it will be understood that when an element such as a layer, region or substrate is referred to as being "on" another element, it can be directly on the other element or intervening elements may be present. It will be further understood that the terms "comprises", "comprising,", "includes" and/or "including", when used herein, specify the presence of stated features, integers, steps, operations, elements, and/or components, but do not preclude the presence or addition of one or more other features, integers, steps, operations, elements, components, and/or groups thereof.

The same reference numerals or the same reference designators denote the same elements throughout the specification.

Hereinafter, exemplary embodiments of the inventive concept will be described in more detail with reference to the drawings.

FIGS. **1** to **3** are cross-sectional views to explain the inventive concept, FIG. **4** is a conceptual diagram to explain the inventive concept, and FIG. **5** is a graph illustrating the comparison of adsorption characteristics of silicon precursors according to an exemplary embodiment of the inventive concept.

Referring to FIG. **1**, patterns **3** are formed on a substrate **1** to be adjacent to each other. The substrate **1** may include, for example, one selected from a group consisting of a single-crystalline silicon layer, a silicon on insulator (SOI), a silicon-germanium layer, a silicon layer on a silicon-germanium layer, a single-crystalline silicon layer on an insulating layer, and a poly silicon layer on an insulating layer. The substrate **1** may further include, for example, an insulating structure, a circuit structure, or an interconnection structure formed thereon.

The patterns **3** may be formed of, for example, an insulating material, a conductive material, metal, or a semiconductor material. The patterns **3** may be, for example, protruded portions of the substrate **1**. A recess region **5** is provided between the patterns **3**. A space L between the patterns **3** may be, for example, equal to or less than about 10 nm.

Referring to FIG. **2**, a seed layer **7** is formed on the patterns **3** having the recess region **5**. According to exemplary embodiments of the inventive concept, the seed layer **7** is formed of, for example, a silicon monolayer.

Referring to FIG. **4**, a silicon precursor having an organic ligand is provided on the substrate **1** to adsorb silicon on sidewalls and a bottom surface of the recess region, thereby forming the silicon monolayer. The silicon precursor having the organic ligand may be, for example, DiIsoPropylAminoSilane ($H_3SiN(CH(CH_3)_2)_2$), BisDiEthylAminoSilane ($H_2Si(N(C_2H_5)_2)_2$), BisTertButylAminoSilane ($H_2Si(NHC(CH_3)_3)_2$), or BisEthylMethylAminoSilane ($H_2Si(N(C_2H_5)(CH_3))_2$). Chemisorption may be enhanced by the organic ligand of the silicon precursor, so that silicon atoms may be readily adsorbed on a surface of a base. Thus, the silicon atoms may not agglomerate together, such that the silicon monolayer can be formed on the surface. The above characteristic of the silicon precursor having the organic ligand is distinguished from general silicon precursors (e.g., Si_2H_6 and SiH_4) used in an atomic layer deposition. If the general silicon

precursors are used, silicon atoms may agglomerate together. Thus, the silicon monolayer may be formed but a silicon thin layer may be deposited.

Referring to FIG. **5**, an absorption time (e.g. an incubation time) of $H_3SiN(CH(CH_3)_2)_2$ is the shortest. Absorption times of $H_2Si(N(C_2H_5)_2)_2$, $H_2Si(NHC(CH_3)_3)_2$, $H_2Si(N(C_2H_5)(CH_3))_2$, Si_2H_6, and SiH_4 increase in the order named. Reference designators (a), (b), (c), and (d) of FIG. **5** correspond to $H_3SiN(CH(CH_3)_2)_2$, $H_2Si(N(C_2H_5)_2)_2$, $H_2Si(NHC(CH_3)_3)_2$, and Si_2H_6, respectively. $H_2Si(N(C_2H_5)_2)_2$ has an absorption time between those of the designators (c) and (d), and the absorption time of SiH_4 is the longest. The silicon precursor having the organic ligand, for example $H_3SiN(CH(CH_3)_2)_2$, $H_2Si(N(C_2H_5)_2)_2$, $H_2Si(NHC(CH_3)_3)_2$, or $H_2Si(N(C_2H_5)(CH_3))_2$, have more excellent absorption characteristic than the general silicon precursors, such as, for example, Si_2H_6, and SiH_4, used in the atomic layer deposition.

Due to the above reasons, the silicon monolayer can be more readily formed using the silicon precursors having the organic ligand according to exemplary embodiments of the inventive concept than the general silicon precursors used in the atomic layer deposition.

Referring to FIGS. **2** and **4** again, the seed layer **7** may be formed at, for example, a substrate temperature equal to or less than about 500 degrees Celsius, so that the absorbed silicon atoms may be heat-treated. A purge process may be performed after the providing of the silicon precursor. Residues including an organic material can be desorbed and removed by, for example, the heat-treatment and the purge process. Thereafter, a silicon layer **9** is formed on the seed layer **7** by a general silicon formation process such as, for example, an atomic layer deposition (ALD) process or a chemical vapor deposition (CVD) process. The silicon layer **9** may be formed through, for example, a process ① and a process ② of FIG. **4**.

Referring to FIG. **3**, the silicon layer **9** grows from the seed layer **7** of the silicon monolayer to fill the recess region without void and cutting. If a silicon seed layer is formed using general silicon precursors used in the atomic layer deposition, silicon atoms may agglomerate together to form a silicon thin layer, not the silicon monolayer, due to a poor absorption characteristic of the general silicon precursors. Thus, a void (or cutting) may be generated in a silicon layer formed on the silicon thin layer. For example, if the silicon layer is formed in a recess region having a space of about 10 nm or less, the above phenomenon (e.g. void or cutting) can be more intensified.

FIGS. **6** to **8** are cross-sectional views illustrating a method of manufacturing a semiconductor device according to an exemplary embodiment of the inventive concept.

Referring to FIG. **6**, a groove **21** is formed in a substrate **10**. The groove **21** may extend, for example, in a direction parallel to a top surface of the substrate **10**. The groove **21** may correspond to the recess region **5** described with reference to FIG. **1**. Regions **11** of the substrate divided by the groove **21** may correspond to the patterns **3** described with reference to FIG. **1**.

The groove **21** may be formed by etching the substrate **10**. Additionally, an undercut region **23** may be further formed. The undercut region **23** may extend from a lower region of the groove **21** in, for example, a direction parallel to the top surface of the substrate **10**. The undercut region **23** may be formed by, for example, forming sidewall spacers (not shown) on sidewalls of the groove **21** and isotropically etching the substrate **10** exposed by the sidewall spacers. The sidewall spacers may be formed of, for example, silicon oxide or silicon nitride. The isotropic etching may be performed using an etching solution capable of selectively etching the substrate with respect to the sidewall spacers. After the undercut region **23** is formed, the sidewall spacers are removed. The undercut region **23** may correspond to the recess region **5** of FIG. **1** described above.

Referring to FIG. **7**, a gate insulating layer **24** is formed on the sidewalls of the groove **21** and sidewalls and a bottom surface of the undercut region **23**. The gate insulating layer **24** may be formed by performing, for example, a thermal oxidation process on the substrate **10**.

A seed layer **25** and a silicon layer **26** are sequentially formed on the gate insulating layer **24** using, for example, the methods described with reference to FIGS. **2** to **4**. As the silicon layer **26** is formed from the seed layer **25** of a silicon monolayer, the silicon layer **26** may be formed without void and cutting in the groove **21** having, for example, a narrow width. The silicon monolayer and the silicon layer may be formed, for example, along the sidewalls of the groove **21** and a profile of the undercut region **23**.

Referring to FIG. **8**, the silicon layer **26** and the seed layer **25** in an upper portion of the groove **21** may be removed. In other words, the silicon layer **26** may fill a lower part of the groove **21**. A capping layer **27** may be formed in the upper portion of the groove **21**. The capping layer **27** may be formed of, for example, a silicon oxide layer or a silicon nitride layer. Dopant ions may be injected into the regions **11** of the substrate divided by the groove **21**, thereby forming source/drain regions **28**. Thus, it is possible to form a buried channel transistor having a gate without void.

FIG. **9** is a layout of a semiconductor device according to an exemplary embodiment of the inventive concept. As illustrated in FIG. **9**, for example, a memory cell of the semiconductor device may be a NAND type non-volatile memory cell.

Referring to FIG. **9**, active regions **13** may extend, for example, in parallel in a first direction. A string selection line SSL and a ground selection line GSL may, for example, cross over the active regions **13** in parallel to each other. A plurality of word lines WL**0** to WLn−1 may, for example, cross over the active regions **13** between the string selection line SSL and the ground selection line GSL. The string selection line SSL, the ground selection line GSL, and the word lines WL**0** to WLn−1 may, for example, extend in parallel in a second direction crossing the first direction. A common source line CSL may, for example, be provided between neighboring ground selection lines GSL to extend in the first direction. Bit lines BL extend, for example, in the second direction. The bit lines BL are connected to source/drain regions between neighboring string selection lines SSL through bit line contacts, respectively. The string selection line SSL, the word lines WL**0** to WLn−1, and the ground selection line GSL may be included in a cell string group. A plurality of the cell string groups may be repeatedly arranged in, for example, mirror symmetry along the first direction.

FIGS. **10** to **16** are cross-sectional views taken along lines I-I' and II-II' of FIG. **9** to explain a method of manufacturing a semiconductor device according to an exemplary embodiment of the inventive concept.

Referring to FIG. **10**, mask patterns **33** may be formed on a substrate **10**. The substrate **10** may include, for example, one selected from a group consisting of a single-crystalline silicon layer, a silicon on insulator (SOD, a silicon layer on a silicon-germanium (SiGe) layer, a single-crystalline silicon layer on an insulating layer, and a poly silicon layer on an insulating layer. For example, a buffer oxide layer **31** may further be formed between the substrate **10** and the mask patterns **33**. The mask patterns **33** may include, for example,

silicon nitride. The substrate **10** is etched using the mask patterns **33** as etch masks to form trenches **35**. Each of the trenches **35** is provided between the mask patterns **33** adjacent to each other on the substrate **10**. The trenches **35** define active regions **13**. The trenches **35** extend, for example, in the first direction.

Referring to FIG. **11**, a device isolation member **37** is formed in each of the trenches **35**. The device isolation member **37** may be formed of an insulating material having an excellent gap-fill characteristic. The device isolation member **37** may include, for example, a silicon oxide layer. For example, the device isolation member **37** may be formed using Tonen Silazane (TOSZ). The TOSZ layer may be, for example, a polysilazane layer. The TOSZ layer may be formed by, for example, a spin coating method. In addition, an annealing process using, for example, O_2 and H_2O may be performed to remove ammonia and hydrogen from the TOSZ layer. Thus, the TOSZ layer may become the silicon oxide layer. Alternatively, the device isolation member **37** may be formed of, for example, a spin on glass (SOG) oxide layer, a high density plasma (HDP) oxide layer, a undoped silicate glass (USG) oxide layer, and/or a tetraethyl orthosilicate (TEOS) oxide layer. The device isolation member **37** may be planarized by, for example, a chemical mechanical polishing (CMP) method. A top surface of the device isolation member **37** may be disposed at, for example, substantially the same level as a top surface of the mask patterns **33**.

The device isolation member **37** may further include, for example, a liner insulating layer between the trench **35** and the silicon oxide layer. For example, the liner insulating layer may be formed on sidewalls and a bottom of the trench **35**. For example, the liner insulating layer may include a silicon oxide layer formed on the sidewall and the bottom of the trench **35** by thermally oxidizing the substrate having the trench **35**, and a silicon nitride layer (or a silicon oxynitride layer) on the silicon oxide layer. The silicon oxide layer of the liner insulating layer may cure damage caused by the etching process for the formation of the trench **35**.

Referring to FIG. **12**, the mask pattern **33** and the buffer oxide layer **31** are removed to expose the active regions **13**. Even though not shown in the drawings, a portion of the device isolation member **37** adjacent to the mask patterns **33** may be removed, so that its width may be reduced. A tunnel insulating layer **41** and a plurality of floating gates **43** may be sequentially formed on each of the exposed active regions **13**. The tunnel insulating layer **41** may be formed on top surfaces of the exposed active regions **13** by, for example, a thermal oxidation of the substrate **10**. The floating gates **43** may be charge storing layers capable of storing charges. The floating gates **43** may be formed of, for example, polysilicon. The floating gates **43** may be planarized by, for example, a CMP method. Top surfaces of the floating gates **43** may be disposed at, for example, substantially the same level as the top surface of the device isolation member **37**. In this case, a width of each of the floating gates **43** may be, for example, wider than a width of each of the active regions **13**.

The floating gates **43** may be formed by, for example, a different method from the method described with reference to FIGS. **10** to **12**. For example, in the process of FIG. **10**, the buffer oxide layer **31** and the mask patterns **33** may be replaced with a tunnel insulating layer and floating gates. For example, the substrate **10** may be etched using the floating gates as etch masks to form the trenches **35**. Thereafter, the device isolation member **37** may be formed, for example, as described with reference to FIG. **1**, thereby forming the structure of FIG. **12**. In this case, a width of each of the floating gates **43** may be, for example, substantially equal to a width of each of the active regions **13**.

Referring to FIG. **13**, an upper portion of the device isolation member **37** is removed, so that the device isolation member **37** is recessed. The recessing of the device isolation member **37** may be performed by, for example, an etch back process. Top surfaces of the device isolation members **37** may be, for example, lower than top surfaces of the floating gates **43**. Thus, recess regions **39** are provided between the floating gates **43**.

For example, referring to FIGS. **14** and **15**, an intergate insulating layer **45** is formed on the floating gates **43**. The intergate insulating layer **45** may include, for example, a material having a dielectric constant greater than the tunnel insulating layer **41**. For example, the integrate insulating layer **45** may include at least one of an ONO layer (a stacked layer of a silicon oxide layer/a silicon nitride layer/a silicon oxide layer) and high-k dielectrics such as an aluminum oxide layer, a hafnium oxide layer, a hafnium-aluminum oxide layer, and a zirconium oxide layer. The intergate insulating layer **45** may extend onto the top surfaces of the device isolation members **37**. The intergate insulating layer **45** may have, for example, openings **46** exposing the floating gates **43** in regions corresponding to the selection lines GSL and SSL.

A seed layer **47** and a silicon layer **49** are sequentially formed using, for example, the methods described with reference to FIGS. **2** to **4**. As the silicon layer **49** is formed from the seed layer **47** of a silicon monolayer, the silicon layer **49** may be formed without void and cutting in recess region **39** and the opening **46** having narrow widths. The seed layer **47** is formed along a profile of the recess region **39** and a profile of the opening **46**.

Referring to FIGS. **15** and **16**, the silicon layer **49** is formed to fill the recess region **39** and the opening **46** without void and cutting. The silicon layer **49** may be patterned to form control gates CG extending, for example, in the second direction. The seed layer **47**, the intergate insulating layer **45** and the floating gates **43** are also patterned in, for example, the second direction. The control gates CG may correspond to the word lines WL**0** to WLn−1 and the selection lines GSL and SSL described with reference to FIG. **9**.

FIG. **17** shows filling characteristics of silicon layers according to an exemplary embodiment of the inventive concept. A height of the sidewall of the recess region **39** was, for example, about 50 nm. As a space L between the floating gates **43** becomes reduced, a void (or cutting) may increase in the recess region **39**. When $H_3SiN(CH(CH_3)_2)_2$ and $H_2Si(N(C_2H_5)_2)_2$ are used as the silicon precursors for the formation of the seed layer, the void (or cutting) does not occur until the spaces L between the patterns becomes reduced to, for example, about 7 nm and about 8 nm, respectively, as represented by designators (a) and (b) illustrated in FIG. **17**. Alternatively, when a silicon layer is formed without the seed layer of an exemplary embodiment of the inventive concept, and if the space L between the patterns is reduced under, for example, about 10 nm, the void (or cutting) may occur as a designator (c) illustrated in FIG. **17**.

FIGS. **18**A and **18**B show cross-sectional views of control gates CG of NAND flash memories corresponding to FIG. **16**. FIG. **18**A is a cross-sectional view illustrating control gates of a NAND flash memory according to an exemplary embodiment of the inventive concept, and FIG. **18**B is a cross-sectional view illustrating control gates of a NAND flash memory formed by a general deposition method without the seed layer of the silicon monolayer. The space L between floating gates **43** was, for example, about 10 nm and a height

of the floating gate **43** was, for example, about 50 nm. Cut portions were found in the control gates CG formed by the general deposition method as illustrated in FIG. **18**B. Alternatively, the cutting was not found in the control gates CG formed by the method according to an exemplary embodiment of the inventive concept as illustrated in FIG. **18**A.

A method of manufacturing a semiconductor device according to an exemplary e embodiment will be described with reference to the drawings.

FIG. **19** is a layout of a semiconductor device according to an exemplary embodiment of the inventive concept. As illustrated in FIG. **19**, a memory cell of the semiconductor device may be, for example, a three-dimensional vertical NAND (VNAND) non-volatile memory cell.

Referring to FIG. **19**, gate electrode stacks G may extend in, for example, a first direction. Common source lines CSL may be provided in the substrate between, for example, the gate electrode stacks G. Bit lines BL extend in, for example, a second direction crossing the first direction to cross over the gate electrode stacks G. Active pillars PL may be provided, for example, at crossing points of the gate electrode stacks G and the bit lines BL, respectively. The active pillars PL may extend, for example, in a direction vertical to the substrate (e.g. a direction perpendicular to the first and second directions).

FIGS. **20** to **22**, **24** to **26**, **28**, and **29** are cross-sectional views illustrating a method of manufacturing a semiconductor device according to an exemplary embodiment of the inventive concept. FIG. **23** is an enlarged view of a portion 'A' of FIG. **22**. FIG. **27** is an enlarged view of a portion 'B' of FIG. **26**.

Referring to FIG. **20**, a substrate **10** is provided. Dopant ions of a first conductivity type may be provided into the substrate **10** to form a well **15**. The well **15** may be formed by, for example, a dopant ion implantation process.

A buffer dielectric layer **51** may be formed on the substrate **10** having the well **15**. For example, the buffer dielectric layer **51** may be a silicon oxide layer. The buffer dielectric layer **51** may be formed by, for example, a thermal oxidation process. First material layers **53** and second material layers **55** may be alternately formed on, for example, the buffer dielectric layer **51**. The lowermost material layer contacting the buffer dielectric layer **51** may be the first material layer **53**. The uppermost material layer may be the second material layer **55**. The second material layers **55** may be insulating layers. For example, the second material layers **55** may include silicon oxide layers, respectively. The first material layers **53** may include, for example, a material having a wet etch selectivity with respect to the buffer dielectric layer **51** and the second material layers **55**. For example, each of the first material layers **53** may include a silicon nitride layer or a silicon oxynitride layer. The first material layers **53** and the second material layers **55** may be formed by, for example, a chemical vapor deposition (CVD) method.

Referring to FIG. **21**, channel holes **57** are formed to successively penetrate the buffer dielectric layer **51**, the first material layers **53** and the second material layers **55**. The channel holes **57** expose the substrate **10**. The channel holes **57** may be arranged in, for example, matrix form along the first direction and the second direction. The first direction and the second direction may be, for example, parallel to the substrate **10** and be intercrossed.

Referring to FIGS. **22** and **23**, active pillars PL connected to the substrate **10** are formed in the channel holes **57**, respectively. The method of forming the active pillars PL will be described in more detail. A seed layer **61** and a silicon layer **63** are sequentially formed in the channel holes **57** using, for example, the method described with reference to FIGS. **2** to **4**. As the silicon layer **63** is formed from the seed layer **61** of a silicon monolayer, the silicon layer **63** may be formed without void and cutting in the channel holes **57** having, for example, narrow widths. The seed layer **61** is formed along a profile of sidewalls and bottom surfaces of the channel holes **57**.

For example, in an embodiment, the silicon layer **63** may partially fill the channel holes **57**, and then an insulating material may be formed on the silicon layer **63** to completely fill the channel holes **57**. The silicon layer **63** and the insulating material may be planarized to expose the uppermost second material layer **55**. Thus, the active pillars PL having, for example, cylinder shapes may be formed, and a filling insulating layer **65** may fill the inside of the active pillar PL. In an embodiment, the silicon layer **63** may, for example, fully fill the channel holes **57**. In this case, the filling insulating layer **65** may be omitted.

Referring to FIG. **24**, upper portions of the active pillars PL may be, for example, recessed to be lower than a top surface of the uppermost second material layer **55**. Capping semiconductor patterns **67** may be formed in the channel holes **57** on the recessed active pillars PL, respectively. For example, dopant ions of a second conductivity type may be injected into upper portions of the active pillars PL, thereby forming drain regions. At the same time, the dopant ions of the second conductivity type may be injected into the capping semiconductor patterns **67**.

The first material layers **53** and the second material layers **55** may be successively patterned to form grooves **58** spaced apart from each other. The grooves **58** may be disposed, for example, between the active pillars PL to extend in the first direction.

Referring to FIG. **25**, the first material layers **53** exposed by the grooves **58** are selectively removed to form undercut regions **59**. The undercut regions **59** correspond to regions where the first material layers **53** are removed. If the first material layers **53** are silicon nitride layers, the removal process may be performed using, for example, an etching solution including phosphoric acid. Portions of the sidewalls of the active pillars PL may be exposed by the undercut regions **59**. The grooves **58** and the undercut regions **59** may correspond to the recess regions **5** described with reference to FIG. **1**.

Referring to FIGS. **26** and **27**, a data storing layer **71** is conformally formed in the undercut regions **59**. The data storing layer **71** may include, for example, a tunnel insulating layer contacting the active pillars PL, a charge storing layer on the tunnel insulating layer, and a blocking insulating layer on the charge storing layer. The tunnel insulating layer may include, for example, a silicon oxide layer. The tunnel insulating layer may be formed by, for example, thermally oxidizing the active pillars PL exposed by the undercut regions **59**. Alternatively, the tunnel insulating layer may be formed by, for example, an atomic layer deposition (ALD) method. The charge storing layer may be, for example, a charge trap layer or an insulating layer including conductive nano particles. The charge trap layer may include, for example, a silicon nitride layer. The blocking insulating layer may include, for example, a high-k dielectric layer (e.g. an aluminum oxide layer or a hafnium oxide layer). The blocking insulating layer may be, for example, a multi-layer consisting of a plurality of thin layers. For example, the blocking insulating layer may include an aluminum oxide layer and a silicon oxide layer, and a stacking order of the aluminum oxide layer and the silicon oxide layer may be variously changed. The charge storing layer and the blocking insulating layer may be formed by, for example, an atomic layer depo-

sition (ALD) method and/or a chemical vapor deposition (CVD) method having excellent step coverage.

A gate conductive layer **74** is formed on the data storing layer **71** to fill the undercut regions **59**. The gate conductive layer **74** may partially or fully fill the grooves **58**. The gate conductive layer **74** includes, for example, a seed layer **73** and a silicon layer **75** sequentially formed using, for example, the methods described with reference to FIGS. **2** to **4**. As the silicon layer **75** is formed from the seed layer **73** of a silicon monolayer, the silicon layer **75** may be formed without void and cutting in the undercut regions **59**. The seed layer **73** is formed along a profile of the undercut regions **59**. The silicon layer **75** may be, for example, a doped silicon layer. The gate conductive layer **74** may further include, for example, at least one of tungsten, metal nitrides, and metal silicides. The silicon layer **75** may be formed by, for example, an atomic layer deposition (ALD) method.

Referring to FIG. **28**, the gate conductive layer **74** outside the undercut regions **59** is removed. Thus, gates are formed in the undercut regions **59**, respectively. The gates may include, for example, an upper selection gate USG, control gates CG**0** to CG**3**, and a lower selection gate LSG. For example, the gates USG, CG**0** to CG**3**, and LSG may be included in the gate electrode stack. A plurality of the gate electrode stacks may be, for example, separated from each other by isolation regions **81** in the second direction. The isolation regions **81** may extend, for example, in the first direction. The gate conductive layer **74** in the grooves **58** is removed to expose the substrate **10**. For example, dopant, ions of the second conductivity type may be provided into the exposed substrate **10** to form common source regions CSL. The second material layers **55** between the gates USG, CG**0** to CG**3**, and LSG may function as intergate insulating layers.

For example, referring to FIG. **29**, an interlayer insulating layer **83** may fill the isolation regions **81**. The interlayer insulating layer **83** may be formed of, for example, a silicon oxide layer. For example, conductive pillars **85** may be formed to penetrate the interlayer insulating layer **83**. The conductive pillars **85** may be connected to, for example the capping semiconductor patterns **67**, respectively. Bit lines BL extending, for example, in the second direction may be formed on the interlayer insulating layer **83** to be connected to the conductive pillars **85**.

It is possible to apply the forming the silicon layer without void and cutting in the recess region and the undercut region by the aforementioned method of an exemplary embodiment of the inventive concept to various fields of semiconductor processes.

FIG. **30** is a schematic block diagram illustrating an example of memory systems including the semiconductor devices formed by an exemplary embodiment of the inventive concept.

Referring to FIG. **30**, an electronic system **1100** according to an exemplary embodiment of the inventive concept may include, for example, a controller **1110**, an input/output (I/O) unit **1120**, a memory device **1130**, an interface unit **1140** and a data bus **1150**. At least two of the controller **1110**, the I/O unit **1120**, the memory device **1130** and the interface unit **1140** may communicate with each other through the data bus **1150**. The data bus **1150** may correspond to a path through which electrical signals are transmitted. The controller **1110**, the I/O unit **1120**, the memory device **1130**, and/or the interface unit **1140** may include the semiconductor device according to an exemplary embodiment of the inventive concept.

The controller **1110** may include, for example, at least one of a microprocessor, a digital signal processor, a microcontroller or another logic device. The other logic device may have a similar function to any one of the microprocessor, the digital signal processor and the microcontroller. The I/O unit **1120** may include, for example, a keypad, a keyboard and/or a display unit. The memory device **1130** may store data and/or commands. The interface unit **1140** may transmit electrical data to a communication network or may receive electrical data from a communication network. The interface unit **1140** may operate by wireless or cable. For example, the interface unit **1140** may include an antenna for wireless communication or a transceiver for cable communication. Although not shown in the drawings, the electronic system **1100** may further include a fast DRAM device and/or a fast SRAM device which acts as a cache memory for increasing an operation of the controller **1110**.

The electronic system **1100** may be applied to, for example, a personal digital assistant (PDA), a portable computer, a web tablet, a wireless phone, a mobile phone, a digital music player, a memory card or other electronic products. The other electronic products may receive or transmit information data by wireless.

FIG. **31** is a schematic block diagram illustrating an example of memory cards including the semiconductor devices formed by an exemplary embodiment of the inventive concept.

Referring to FIG. **31**, a memory card **1200** may include, for example, a memory device **1210**. The memory device **1210** may include at least one of the semiconductor devices according to an exemplary embodiment of the inventive concept mentioned above. In an embodiment, the memory device **1210** may further include, for example, other types of semiconductor memory devices which are different from the semiconductor devices according to an exemplary embodiment of the inventive concept described above. For example, the memory device **1210** may further include a dynamic random access memory (DRAM) device and/or a static random access memory (SRAM) device. The memory card **1200** may include, for example, a memory controller **1220** that controls data communication between a host and the memory device **1210**. The memory device **1210** and/or the controller **1220** may include, for example, the semiconductor devices according to an exemplary embodiment of the inventive concept.

The memory controller **1220** may include, for example, a central processing unit (CPU) **1222** that controls overall operations of the memory card **1200**. In addition, the memory controller **1220** may include, for example, an SRAM device **1221** used as an operation memory of the CPU **1222**. Moreover, the memory controller **1220** may further include, for example, a host interface (IF) unit **1223** and a memory interface (IF) unit **1225**. The host IF unit **1223** may be configured to include a data communication protocol between the memory card **1200** and the host. The memory IF unit **1225** may connect the memory controller **1220** to the memory device **1210**. The memory controller **1220** may further include, for example, an error check and correction (ECC) block **1224**. The ECC block **1224** may detect and correct errors of data which are read out from the memory device **1210**. Even though not shown in the drawings, the memory card **1200** may further include, for example, a read only memory (ROM) device that stores code data to interface with the host. The memory card **1200** may be used as, for example, a portable data storage card. Alternatively, the memory card **1200** may realized as, for example, solid state disks (SSD) which are used as hard disks of computer systems.

FIG. **32** is a schematic block diagram illustrating an example of data processing systems including the semiconductor devices formed by an exemplary embodiment of the inventive concept.

Referring to FIG. **32**, a data processing system **1300** according to an exemplary embodiment of the inventive concept includes, for example, a modulator-demodulator (MODEM) **1320**, a central processing unit (CPU) **1330**, a random access memory (RAM) device **1340** and a user interface unit **1350** that are electrically connected to a flash memory system **1310** through a data bus **760**. The flash memory system **1310** may have, for example, substantially the same configuration as the memory system described above. For example, the flash memory system **1310** may include a flash memory **1311** and a memory controller **1312**. The flash memory system **1310** may store data processed by the CPU **1330** or data transmitted from an external system. Here, the flash memory system **1310** may be realized as, for example, a solid state drive (SSD). In this case, the data processing system **1300** may stably and reliably store massive data into the flash memory system **1310**. Additionally, due to increased reliability, the flash memory system **1310** may reduce a resource for correcting errors to provide data communication of high speed to the data processing system **1300**. Although not shown in the drawings, the data processing system **1300** may further include, for example, an application chipset, a camera image processor (CIS), and/or an input/output unit.

Additionally, the semiconductor devices or the memory systems according to an exemplary embodiment of the inventive concept may be encapsulated using various packaging techniques. For example, the semiconductor devices or the memory systems according to an exemplary embodiment may be encapsulated using any one of a package on package (POP) technique, a ball grid arrays (BGAs) technique, a chip scale packages (CSPs) technique, a plastic leaded chip carrier (PLCC) technique, a plastic dual in-line package (PDIP) technique, a die in waffle pack technique, a die in wafer form technique, a chip on board (COB) technique, a ceramic dual in-line package (CERDIP) technique, a plastic metric quad flat package (PMQFP) technique, a plastic quad flat package (PQFP) technique, a small outline package (SOIC) technique, a shrink small outline package (SSOP) technique, a thin small outline package (TSOP) technique, a thin quad flat package (TQFP) technique, a system in package (SIP) technique, a multi chip package (MCP) technique, a wafer-level fabricated package (WFP) technique and a wafer-level processed stack package (WSP) technique.

According to an exemplary embodiment of the inventive concept, the silicon layer may fill without void and cutting in the narrow recess regions between patterns.

Having described exemplary embodiments of the inventive concept, it is further noted that it is readily apparent to those of ordinary skill in the art that various modifications may be made without departing from the spirit and scope of the invention which defined by the metes and bounds of the appended claims.

What is claimed is:

1. A method of manufacturing a semiconductor device, comprising:

forming a plurality of patterns having a recess region defined therebetween on a substrate;

forming a silicon monolayer on the patterns having the recess region defined therebetween by providing a silicon precursor having an organic ligand on the substrate to absorb silicon on sidewalls and a bottom surface of the recess region; and

forming a silicon layer without void and cutting on the silicon monolayer.

2. The method of claim **1**, wherein a space between the sidewalls of the recess region is no greater than about 10 nm.

3. The method of claim **1**, wherein the silicon precursor having the organic ligand is one of $H_3SiN(CH(CH_3)_2)_2$, $H_2Si(N(C_2H_5)_2)_2$, $H_2Si(NHC(CH_3)_3)_2$, or $H_2Si(N(C_2H_5)(CH_3))_2$.

4. The method of claim **1**, wherein the forming of the silicon monolayer is performed at a substrate temperature of no greater than about 500 degrees Celsius.

5. The method of claim **1**, wherein the forming of the patterns comprises:

forming a plurality of device isolation members on the substrate to define a plurality of active regions;

sequentially forming a tunnel insulating layer and a floating gate on each of the active regions, wherein top surfaces of the device isolation members are lower than top surfaces of the floating gates; and

forming an intergate insulating layer on the floating gates, wherein the intergate insulating layer extend onto the top surface of the device isolation members.

6. The method of claim **1**, wherein the forming of the patterns comprises etching the substrate to form the recess region in the substrate; and

wherein the silicon monolayer is formed along a profile of the sidewalls and the bottom surface of the recess region.

7. The method of claim **1**, wherein the forming of the silicon layer further comprises growing the silicon layer from the silicon monolayer to fill the recess region without void and cutting.

8. The method of claim **4**, wherein the forming of the silicon monolayer further comprises purging residues after providing the silicon precursor.

9. The method of claim **5**, wherein the silicon monolayer is formed along a profile of the intergate insulating layer.

10. The method of claim **5**, wherein the intergate insulating layer has an opening exposing one of the floating gates; and

wherein the silicon monolayer is formed along a profile of the opening, and wherein the silicon layer fills the opening without void and cutting.

11. The method of claim **9**, wherein the recess region is disposed between the floating gates; and

wherein the silicon layer without void and cutting fills the recess region between the floating gates.

12. The method of claim **6**, wherein the silicon layer fills a lower portion of the recess region,

the method, further comprising:

injecting dopant ions into regions of the substrate divided by the recess region to form source/drain regions.

13. The method of claim **6**, wherein the forming of the patterns further comprises forming an undercut region extending from the recess region in a direction parallel to a top surface of the substrate; and

wherein the silicon monolayer and the silicon layer are formed along a profile of sidewalls of the recess region and the undercut region.

14. A method of manufacturing a semiconductor device, comprising:

alternately stacking a plurality of first material layers and a plurality of second material layers on a substrate;

forming a plurality of channel holes penetrating the first material layers and the second material layers, wherein the channel holes expose the substrate;

forming a first silicon monolayer along a profile of the exposed substrate and sidewalls of the channel holes by providing a silicon precursor having an organic ligand on the substrate to absorb silicon on the sidewalls of the channel holes and the exposed substrate; and

forming a first silicon layer without void and cutting on the first silicon monolayer to form a plurality of active pillars.

15. The method of claim **14**, further comprising:

etching the first material layers and the second material layers to form a groove between the channel holes;

selectively removing the first material layers exposed by the groove to form undercut regions exposing the active pillars and top surfaces and bottom surfaces of the second material layers, wherein the undercut regions extend from the groove toward the active pillars;

forming a data storing layer on the exposed active pillars and the exposed top surfaces and bottom surfaces of the second material layers;

forming a second silicon monolayer on the data storing layer by providing a silicon precursor having an organic ligand on the data storing layer to absorb silicon on a surface of the data storing layer; and

forming a second silicon layer without void and cutting on the second silicon monolayer to fill the undercut regions.

16. The method of claim **15**, further comprising:

removing the second silicon layer formed in the groove to form gates in the undercut regions, respectively.

17. The method of claim **16**, further comprising providing dopant ions into a portion of the substrate exposed by the removal of the second silicon layer from the groove to form common sources regions.

18. The method of claim **17**, further comprising:

filling isolation regions defined between the gates with an interlayer insulating layer;

forming conductive pillars penetrating the interlayer insulating layer; and

forming bit lines on the interlayer insulating layer, wherein the bit lines are connected to the conductive pillars.

19. A method for manufacturing a semiconductor device comprising:

forming a groove in a substrate extending in a direction parallel to a top surface of the substrate, thereby defining a plurality of regions in the substrate which are divided by the groove;

forming an undercut region extending from a lower area of the groove in the direction parallel to the top surface of the substrate;

forming a gate insulating layer on sidewalls of the groove and sidewalls and a bottom surface of the undercut region;

forming a seed layer of a silicon monolayer on the gate insulating layer by providing a silicon precursor including an organic ligand on the gate insulating layer to absorb silicon on a surface of the gate insulating layer;

forming a silicon layer on the seed layer, wherein the silicon layer grows from the seed layer of the silicon monolayer to fill the groove without void and cutting;

removing a portion of the silicon layer and the seed layer in an upper portion of the groove;

forming a capping layer in the upper portion of the groove; and

providing dopant ions into the regions of the substrate divided by the groove, thereby forming source/drain regions.

20. The method of claim **19**, wherein the seed layer of the silicon monolayer and the silicon layer are formed along the sidewalls of the groove and a profile of the undercut region, and wherein the gate insulating layer is formed by performing a thermal oxidation process on the substrate.

* * * * *