US009530492B2

(12) **United States Patent**
Lee

(10) **Patent No.: US 9,530,492 B2**
(45) **Date of Patent: *Dec. 27, 2016**

(54) **NAND ARRAY HIARCHICAL BL STRUCTURES FOR MULTIPLE-WL AND ALL-BL SIMULTANEOUS ERASE, ERASE-VERIFY, PROGRAM, PROGRAM-VERIFY, AND READ OPERATIONS**

(71) Applicant: **Peter Wung Lee**, Saratoga, CA (US)

(72) Inventor: **Peter Wung Lee**, Saratoga, CA (US)

(73) Assignee: **Peter Wung Lee**, Saratoga, CA (US)

(*) Notice: Subject to any disclaimer, the term of this patent is extended or adjusted under 35 U.S.C. 154(b) by 0 days.

This patent is subject to a terminal disclaimer.

(21) Appl. No.: **14/953,384**

(22) Filed: **Nov. 29, 2015**

(65) **Prior Publication Data**

US 2016/0078928 A1 Mar. 17, 2016

Related U.S. Application Data

(63) Continuation of application No. 14/341,739, filed on Jul. 25, 2014, now Pat. No. 9,230,677.
(Continued)

(51) **Int. Cl.**
G11C 16/04 (2006.01)
G11C 11/56 (2006.01)
(Continued)

(52) **U.S. Cl.**
CPC ***G11C 11/5635*** (2013.01); ***G11C 11/56*** (2013.01); ***G11C 11/5628*** (2013.01);
(Continued)

(58) **Field of Classification Search**
CPC . G11C 16/0483; G11C 16/26; G11C 16/3459; G11C 11/5642; G11C 16/10; G11C 16/16; G11C 16/3418; G11C 16/3445
(Continued)

(56) **References Cited**

U.S. PATENT DOCUMENTS

8,169,826 B2 * 5/2012 Hishida G11C 5/02 257/324
8,659,944 B2 * 2/2014 Hung G11C 16/0466 365/185.05
(Continued)

Primary Examiner — Gene Auduong
(74) *Attorney, Agent, or Firm* — Raywell Group, LLC

(57) **ABSTRACT**

Several 2D and 3D HiNAND flash memory arrays with 1-level or 2-level broken BL-hierarchical structures are provided for Multiple Whole-WL and All-BL simultaneous operations in Dispersed Blocks. The global bit line (GBL) is divided to multiple 1 (top)-level broken metal2 GBLs plus optional lower-level broken metal1 local bit lines (LBLs). A preferred $V_{inhibit}$ supply higher than Vdd can be selectively supplied via horizontal metal0 power line LBLps to charge selected broken GBLs/LBLs which can also be selectively discharged via a String source line. Charge-sharing technique for precharging and discharging of broken GBL/LBL capacitors for NAND cell data sensing is used in Read and Verify operations with reduced power consumption and latency. Recall technique to restore the desired Program Data stored in the broken GBL/LBL capacitors is used for Multiple-WL and All-BL Program and Program-Verify operation with reduced program current for highest program yield superior P/E cycles.

25 Claims, 38 Drawing Sheets

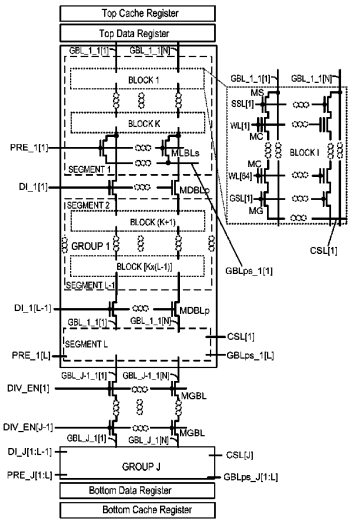

Related U.S. Application Data

(60) Provisional application No. 61/858,611, filed on Jul. 25, 2013.

(51) **Int. Cl.**

G11C 16/10	(2006.01)
G11C 16/16	(2006.01)
G11C 16/26	(2006.01)
G11C 16/34	(2006.01)
G11C 16/06	(2006.01)
G11C 16/14	(2006.01)
G11C 16/24	(2006.01)

(52) **U.S. Cl.**

CPC ***G11C 11/5642*** (2013.01); ***G11C 11/5671*** (2013.01); ***G11C 16/0483*** (2013.01); ***G11C 16/06*** (2013.01); ***G11C 16/10*** (2013.01); ***G11C 16/14*** (2013.01); ***G11C 16/16*** (2013.01); ***G11C 16/24*** (2013.01); ***G11C 16/26*** (2013.01); ***G11C 16/3418*** (2013.01); ***G11C 16/3459*** (2013.01); *G11C 2211/5641* (2013.01)

(58) **Field of Classification Search**

USPC 365/185.11, 185.12, 185.17, 185.33,365/185.03

See application file for complete search history.

(56) **References Cited**

U.S. PATENT DOCUMENTS

9,230,677	B2 *	1/2016	Lee	G11C 11/56
2014/0347928	A1 *	11/2014	Lee	G11C 16/0483 365/185.11
2015/0003151	A1 *	1/2015	Lee	G11C 16/10 365/185.02
2015/0078086	A1 *	3/2015	Lee	G11C 16/0483 365/185.11

* cited by examiner

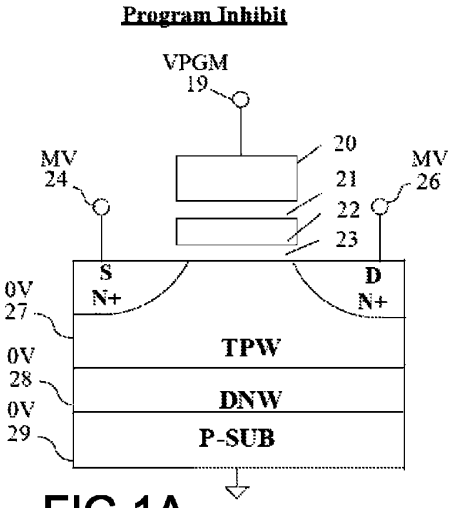

FIG.1A

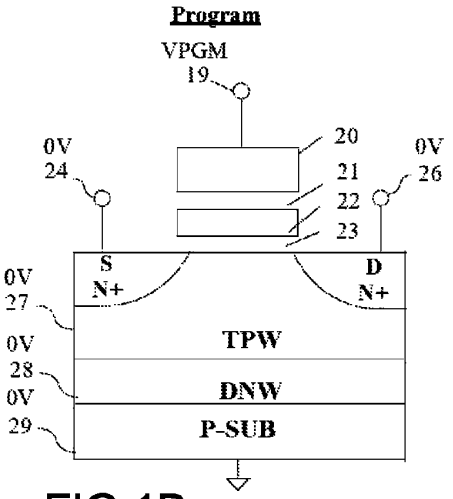

FIG.1B

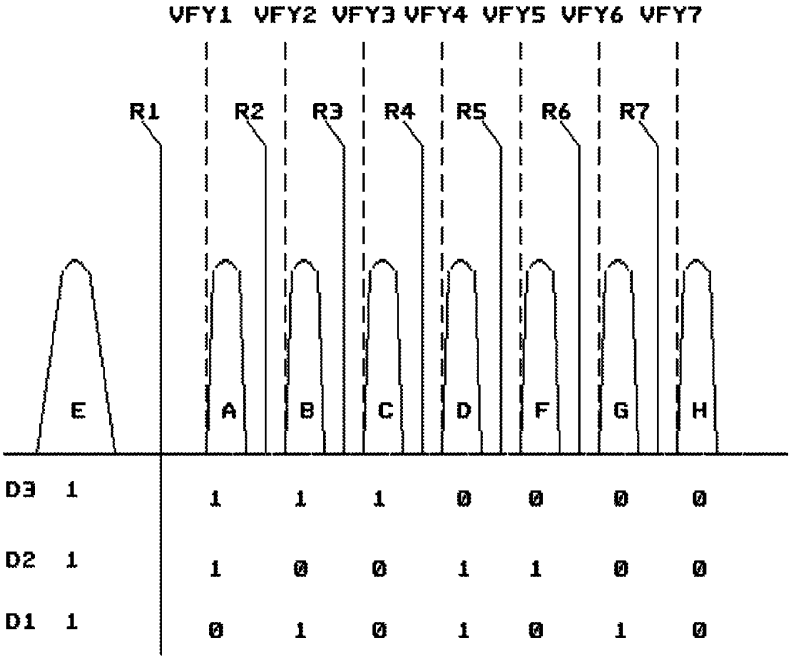

FIG.1C

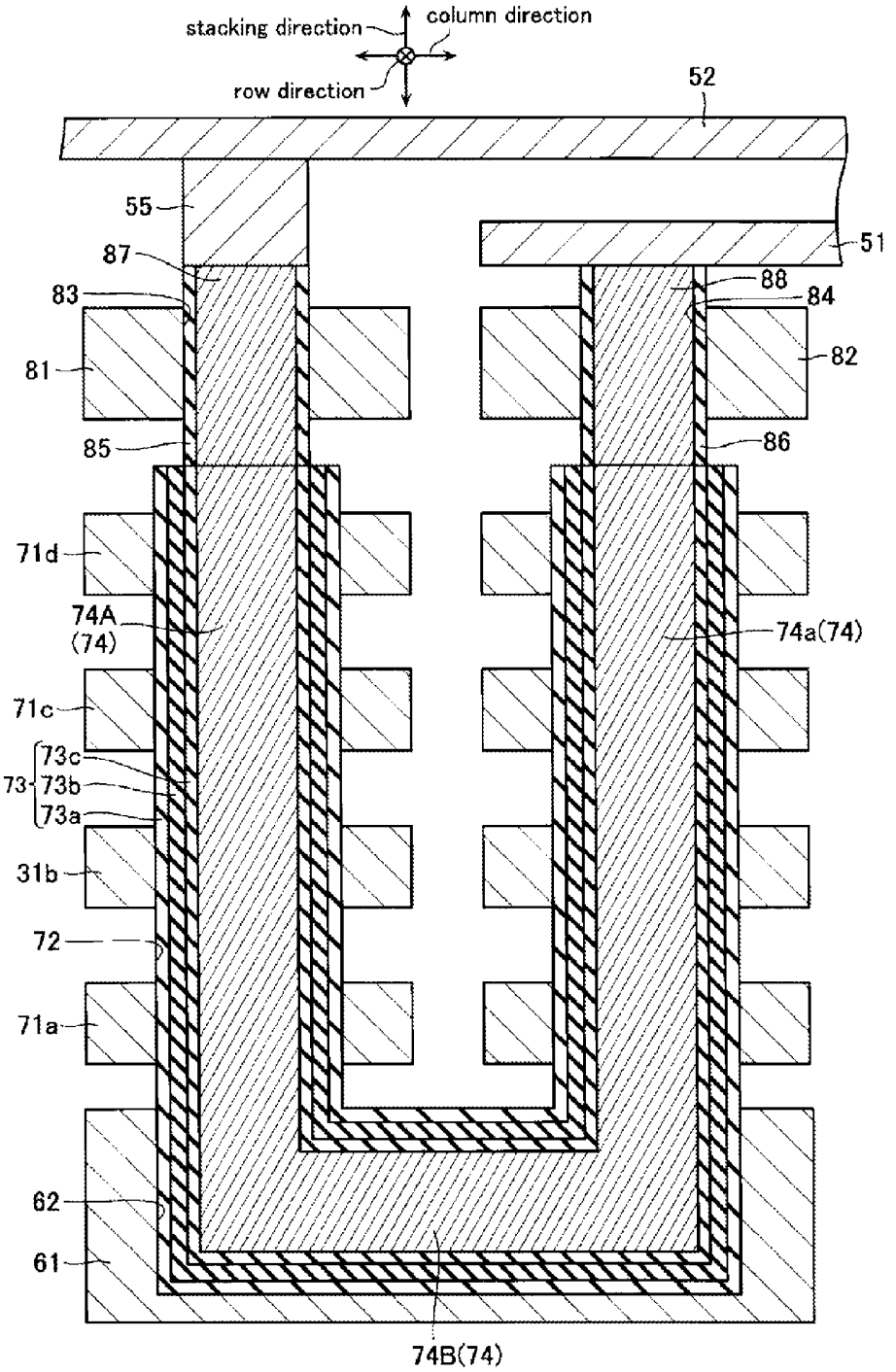

FIG.1D (Prior Art)

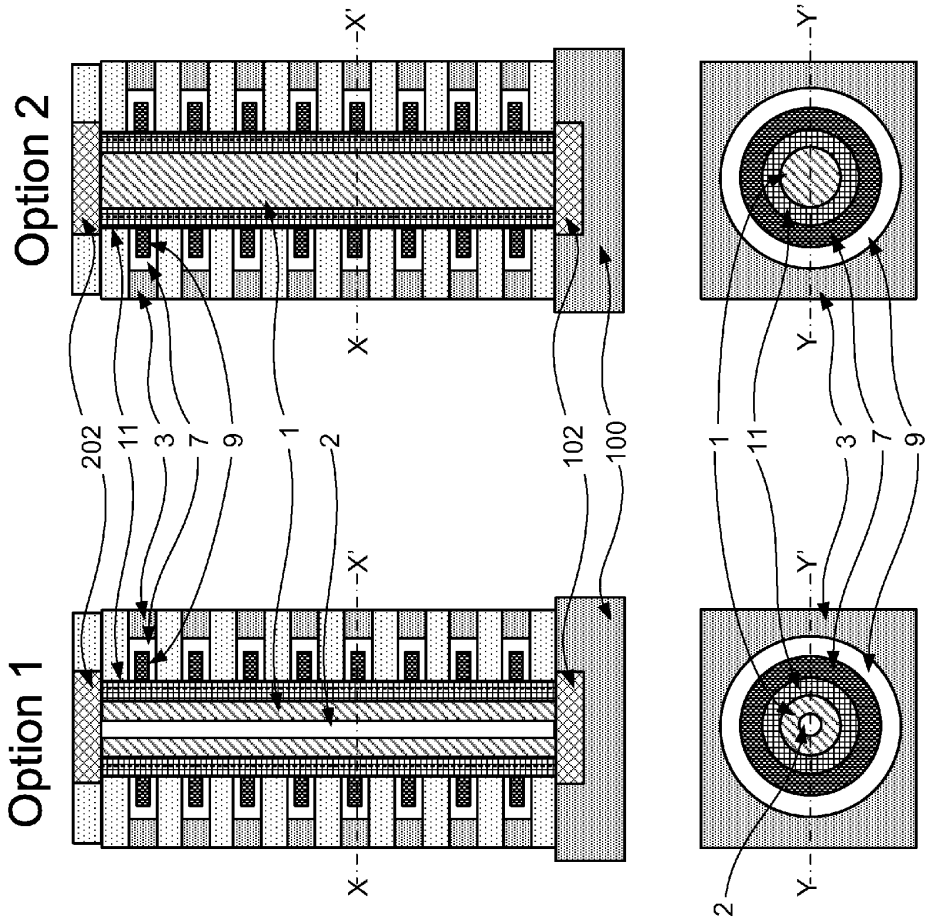

FIG.1E (Prior Art)

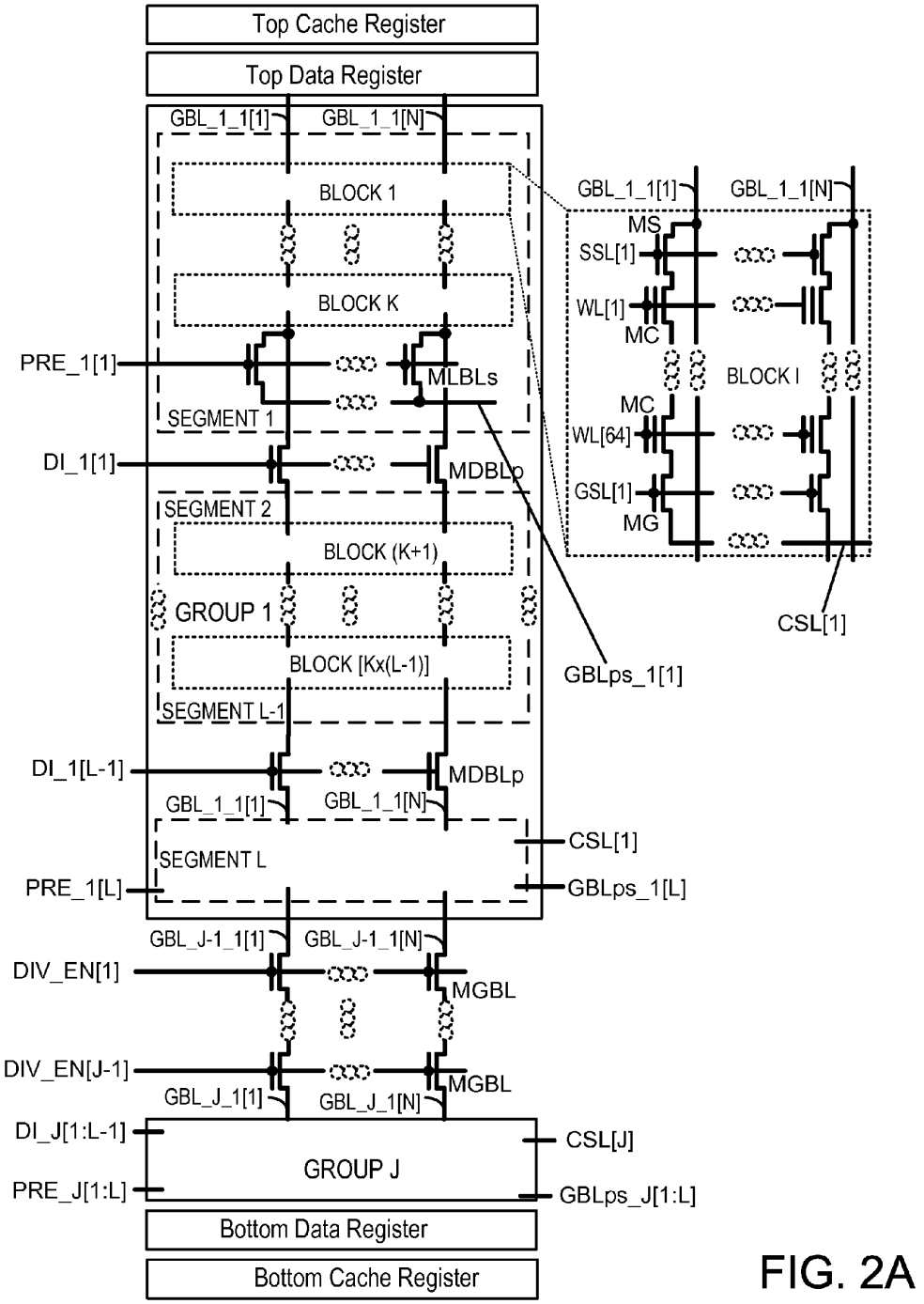
Top Cache Register
Top Data Register
GBL_1_1[1]
GBL_1_1[N]
BLOCK 1
BLOCK K
PRE_1[1]
MLBLs
SEGMENT 1
DI_1[1]
MDBLp
SEGMENT 2
BLOCK (K+1)
GROUP 1
BLOCK [Kx(L-1)]
SEGMENT L-1
DI_1[L-1]
MDBLp
GBL_1_1[1]
GBL_1_1[N]
CSL[1]
SEGMENT L
PRE_1[L]
GBLps_1[L]
GBL_J-1_1[1]
GBL_J-1_1[N]
DIV_EN[1]
MGBL
DIV_EN[J-1]
MGBL
GBL_J_1[1]
GBL_J_1[N]
DI_J[1:L-1]
CSL[J]
GROUP J
PRE_J[1:L]
GBLps_J[1:L]
Bottom Data Register
Bottom Cache Register
GBL_1_1[1]
GBL_1_1[N]
MS
SSL[1]
WL[1]
MC
BLOCK I
MC
WL[64]
GSL[1]
MG
CSL[1]
GBLps_1[1]

FIG. 2A

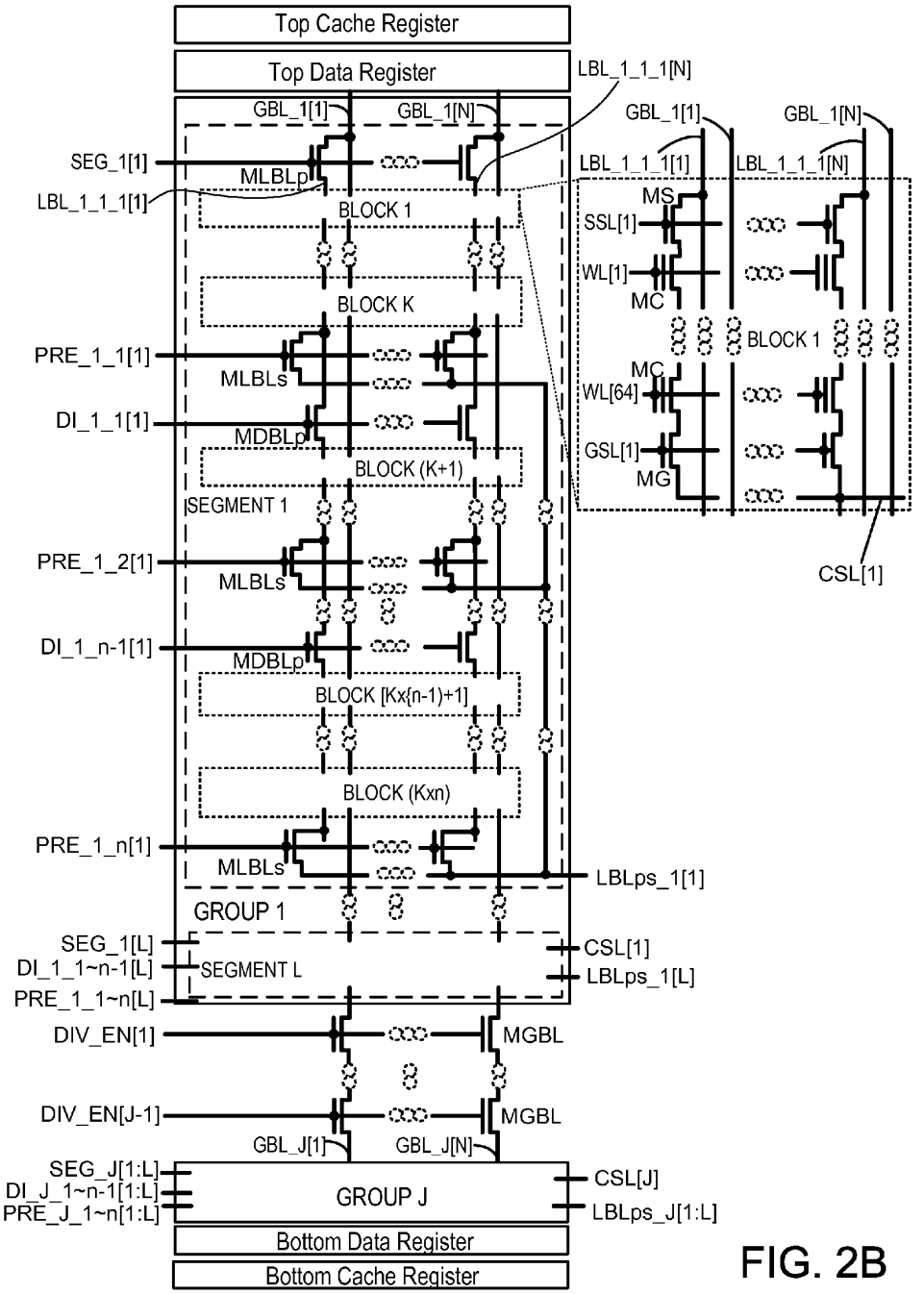
Top Cache Register
Top Data Register
LBL_1_1_1[N]
GBL_1[1]
GBL_1[N]
SEG_1[1]
MLBLp
LBL_1_1_1[1]
BLOCK 1
BLOCK K
PRE_1_1[1]
MLBLs
DI_1_1[1]
MDBLp
BLOCK (K+1)
SEGMENT 1
PRE_1_2[1]
MLBLs
DI_1_n-1[1]
MDBLp
BLOCK [Kx(n-1)+1]
BLOCK (Kxn)
PRE_1_n[1]
MLBLs
LBLps_1[1]
GROUP 1
SEG_1[L]
DI_1_1~n-1[L]
PRE_1_1~n[L]
SEGMENT L
CSL[1]
LBLps_1[L]
DIV_EN[1]
MGBL
DIV_EN[J-1]
MGBL
GBL_J[1]
GBL_J[N]
SEG_J[1:L]
DI_J_1~n-1[1:L]
PRE_J_1~n[1:L]
GROUP J
CSL[J]
LBLps_J[1:L]
Bottom Data Register
Bottom Cache Register
GBL_1[1]
GBL_1[N]
LBL_1_1_1[1]
LBL_1_1_1[N]
MS
SSL[1]
WL[1]
MC
BLOCK 1
MC
WL[64]
GSL[1]
MG
CSL[1]

FIG. 2B

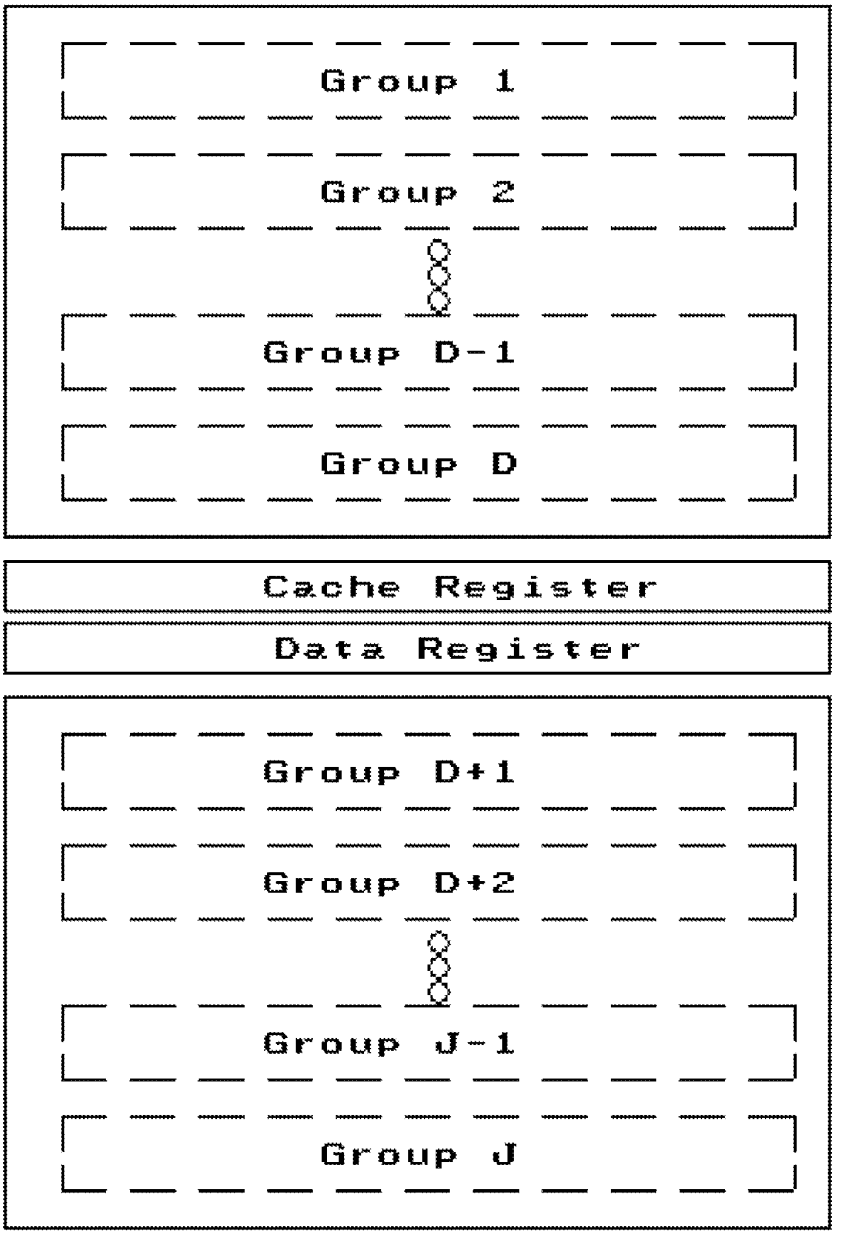
Group 1
Group 2
Group D-1
Group D
Cache Register
Data Register
Group D+1
Group D+2
Group J-1
Group J

FIG. 3

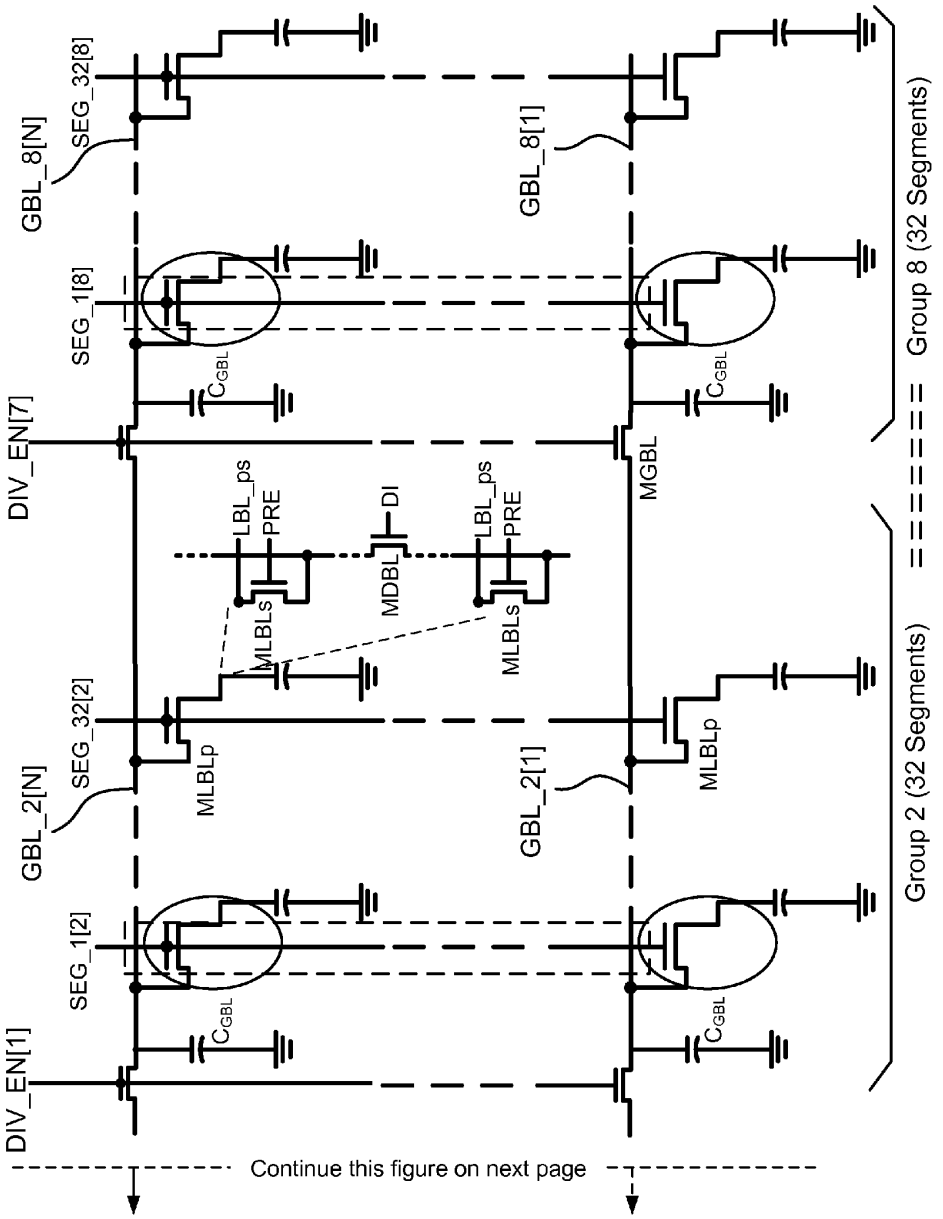
DIV_EN[1]
DIV_EN[7]
GBL_2[N]
GBL_8[N]
SEG_1[2]
SEG_1[8]
SEG_32[2]
SEG_32[8]
GBL_2[1]
GBL_8[1]
C_{GBL}
MLBLp
MLBLs
LBL_ps
PRE
MDBL
DI
MGBL
Group 2 (32 Segments)
Group 8 (32 Segments)
Continue this figure on next page

FIG. 4A

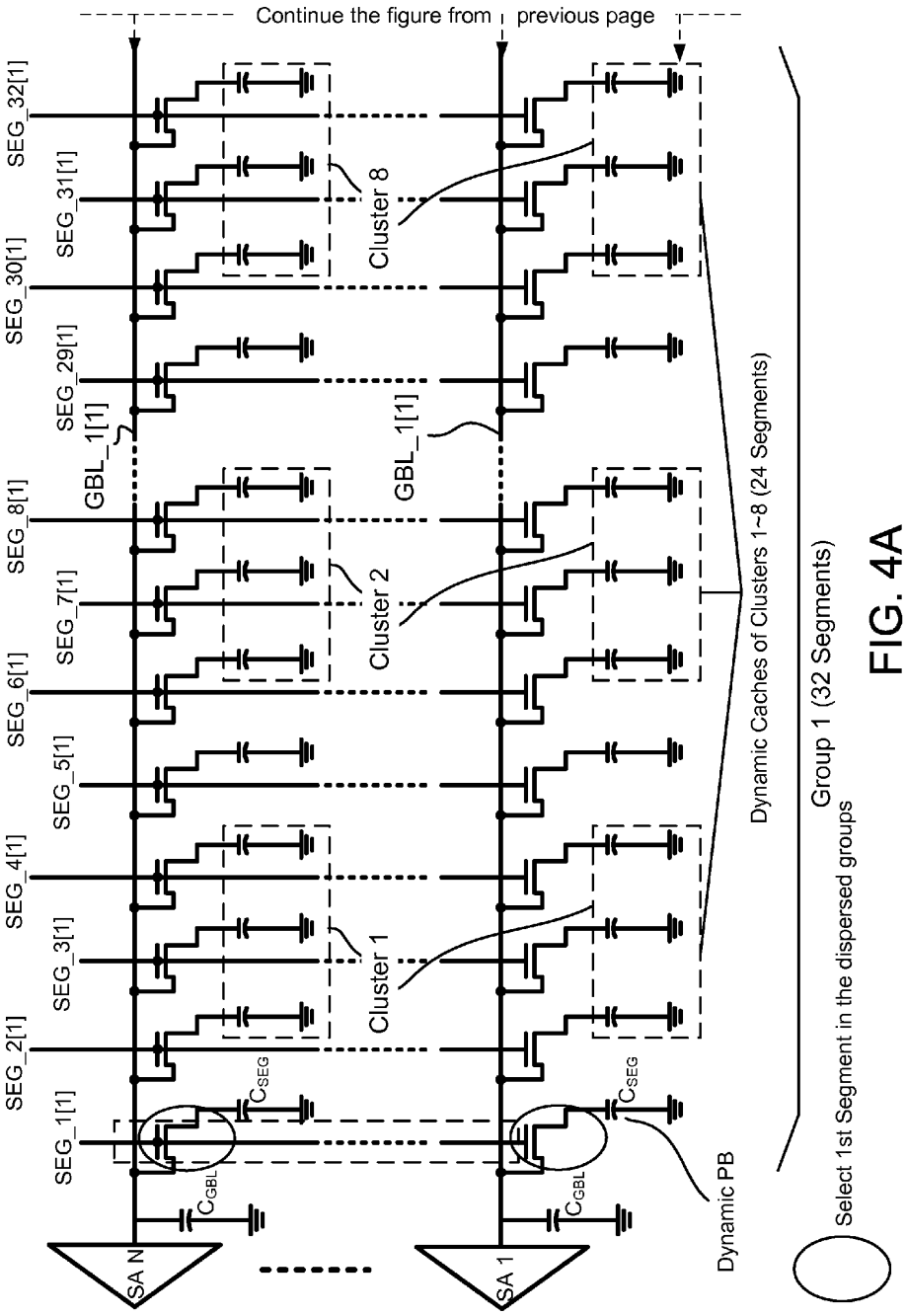
Continue the figure from previous page
SEG_1[1]
SEG_2[1]
SEG_3[1]
SEG_4[1]
SEG_5[1]
SEG_6[1]
SEG_7[1]
SEG_8[1]
SEG_29[1]
SEG_30[1]
SEG_31[1]
SEG_32[1]
GBL_1[1]
GBL_1[1]
Cluster 1
Cluster 2
Cluster 8
C_{SEG}
C_{GBL}
SA N
SA 1
Dynamic PB
Dynamic Caches of Clusters 1~8 (24 Segments)
Group 1 (32 Segments)
Select 1st Segment in the dispersed groups

FIG. 4A

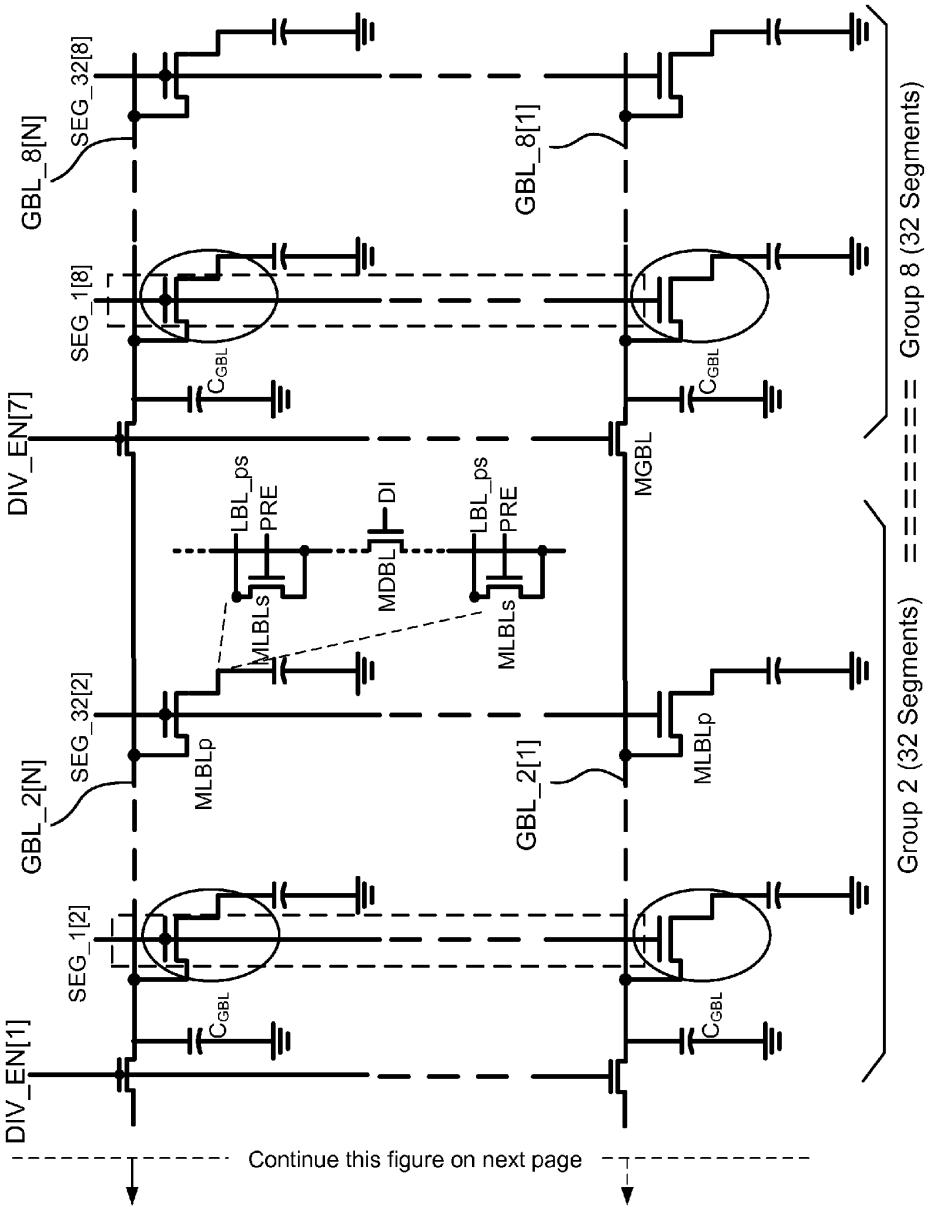
GBL_8[N]
SEG_32[8]
SEG_1[8]
DIV_EN[7]
GBL_2[N]
SEG_32[2]
SEG_1[2]
DIV_EN[1]
GBL_8[1]
GBL_2[1]
C_{GBL}
LBL_ps
PRE
MLBLs
MDBL
DI
MLBLp
MGBL
Group 8 (32 Segments)
Group 2 (32 Segments)
Continue this figure on next page

FIG. 4B

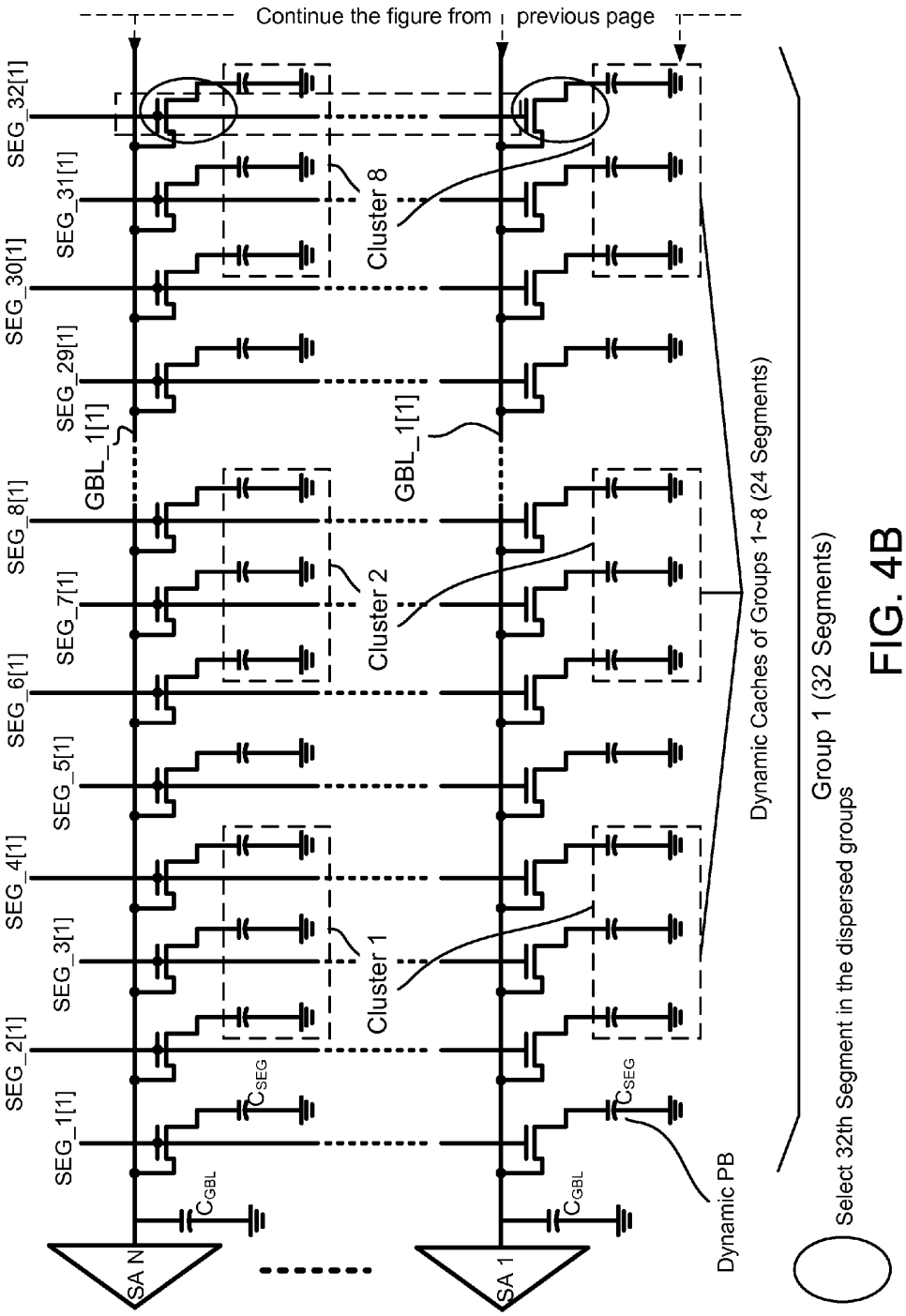
Continue the figure from previous page
SEG_32[1]
SEG_31[1]
SEG_30[1]
SEG_29[1]
GBL_1[1]
SEG_8[1]
SEG_7[1]
SEG_6[1]
SEG_5[1]
SEG_4[1]
SEG_3[1]
SEG_2[1]
SEG_1[1]
Cluster 8
Cluster 2
Cluster 1
GBL_1[1]
C_{SEG}
C_{GBL}
SA N
SA 1
Dynamic PB
Dynamic Caches of Groups 1~8 (24 Segments)
Group 1 (32 Segments)
Select 32th Segment in the dispersed groups

FIG. 4B

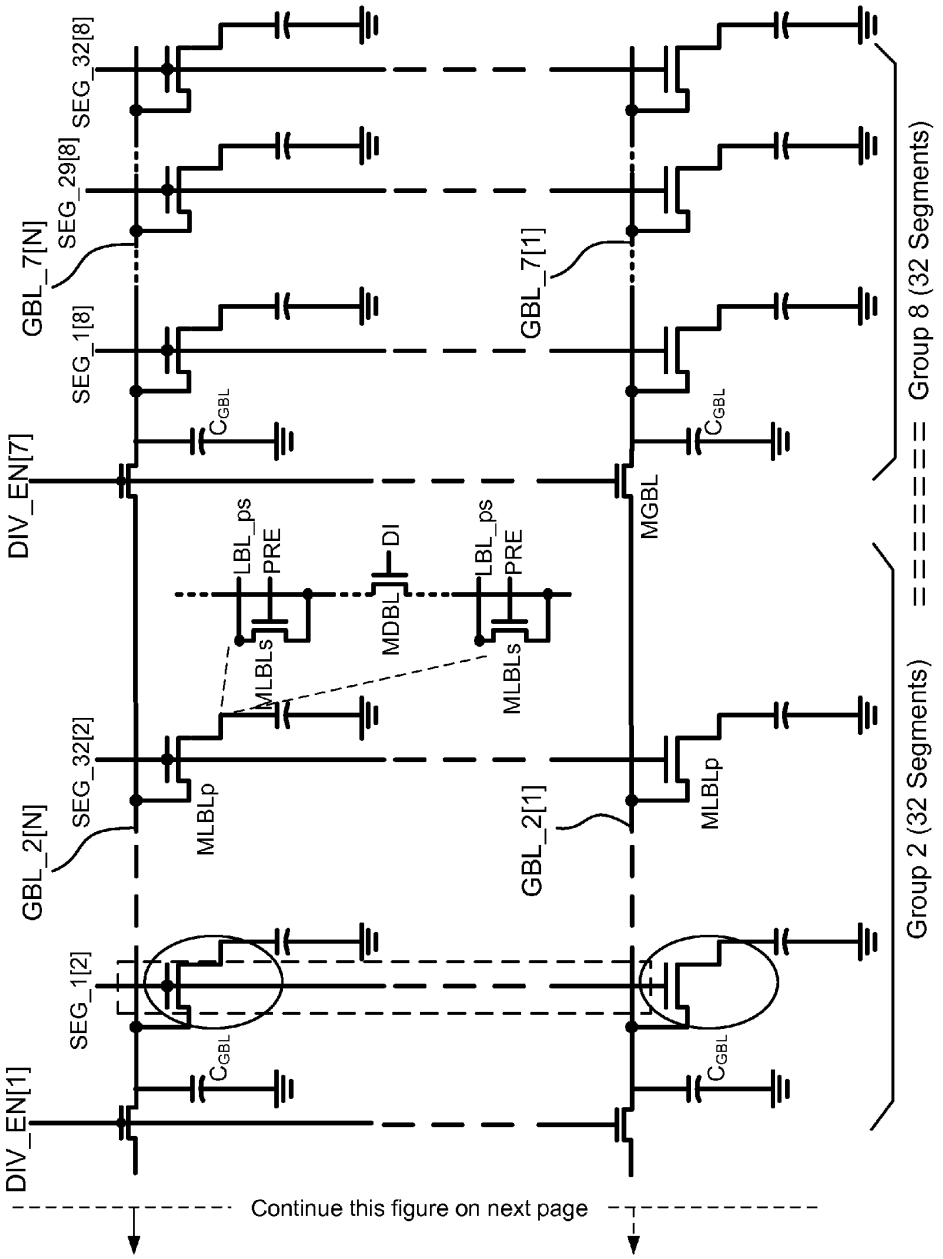
DIV_EN[1]
SEG_1[2]
GBL_2[N]
SEG_32[2]
DIV_EN[7]
SEG_1[8]
GBL_7[N]
SEG_29[8]
SEG_32[8]
C_{GBL}
MLBLp
MLBLs
LBL_ps
PRE
MDBL
DI
MGBL
GBL_2[1]
GBL_7[1]
Group 2 (32 Segments)
Group 8 (32 Segments)
Continue this figure on next page

FIG. 4C

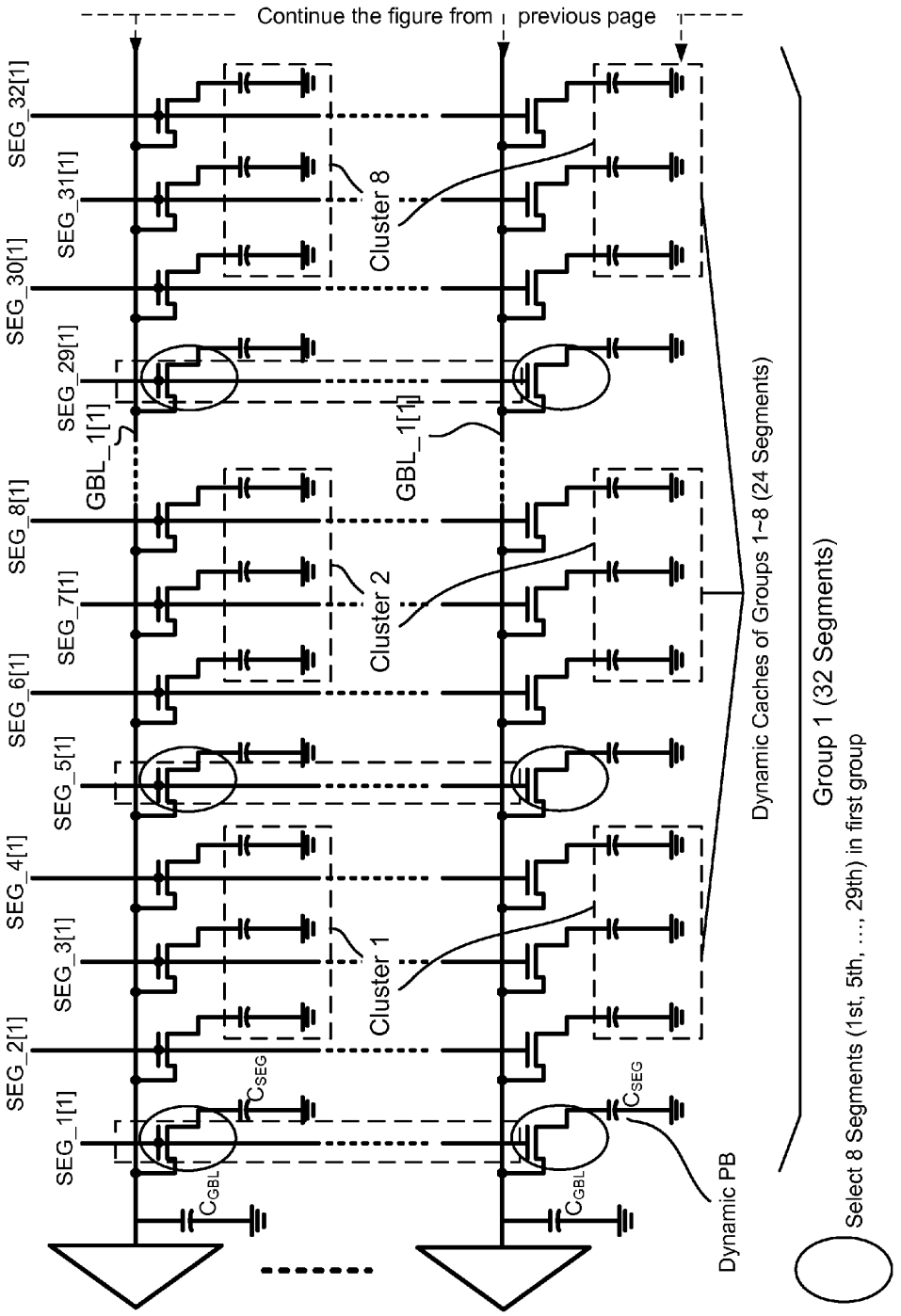
Continue the figure from previous page
SEG_32[1]
SEG_31[1]
SEG_30[1]
SEG_29[1]
GBL_1[1]
SEG_8[1]
SEG_7[1]
SEG_6[1]
SEG_5[1]
SEG_4[1]
SEG_3[1]
SEG_2[1]
SEG_1[1]
Cluster 8
Cluster 2
Cluster 1
C_{SEG}
C_{GBL}
Dynamic PB
Dynamic Caches of Groups 1~8 (24 Segments)
Group 1 (32 Segments)
Select 8 Segments (1st, 5th, ..., 29th) in first group

FIG. 4C

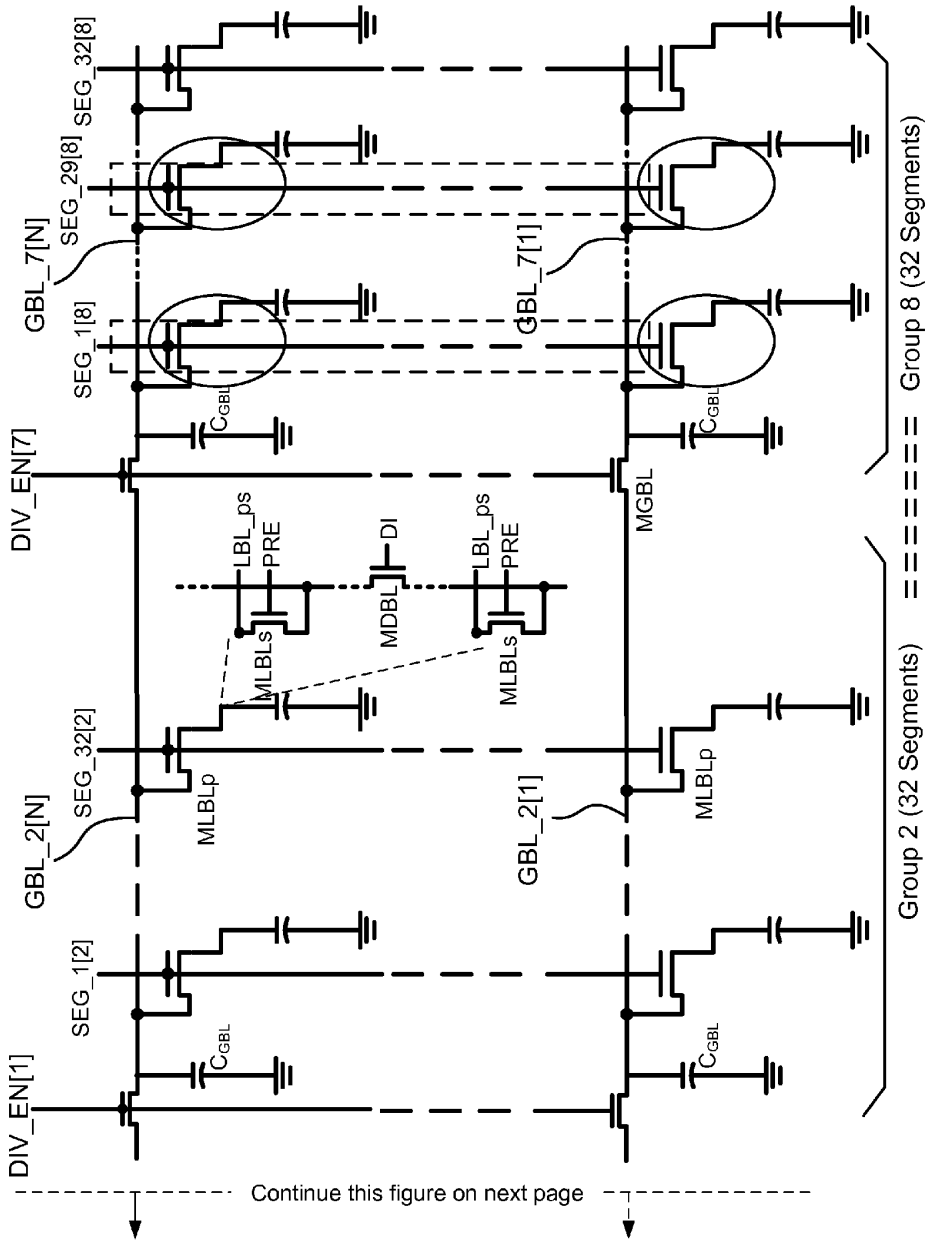
DIV_EN[1]
DIV_EN[7]
GBL_2[N]
GBL_7[N]
SEG_1[2]
SEG_32[2]
SEG_1[8]
SEG_29[8]
SEG_32[8]
C_{GBL}
MLBLp
MLBLs
LBL_ps
PRE
MDBL
DI
GBL_2[1]
GBL_7[1]
MGBL
Group 2 (32 Segments)
Group 8 (32 Segments)
Continue this figure on next page

FIG. 4D

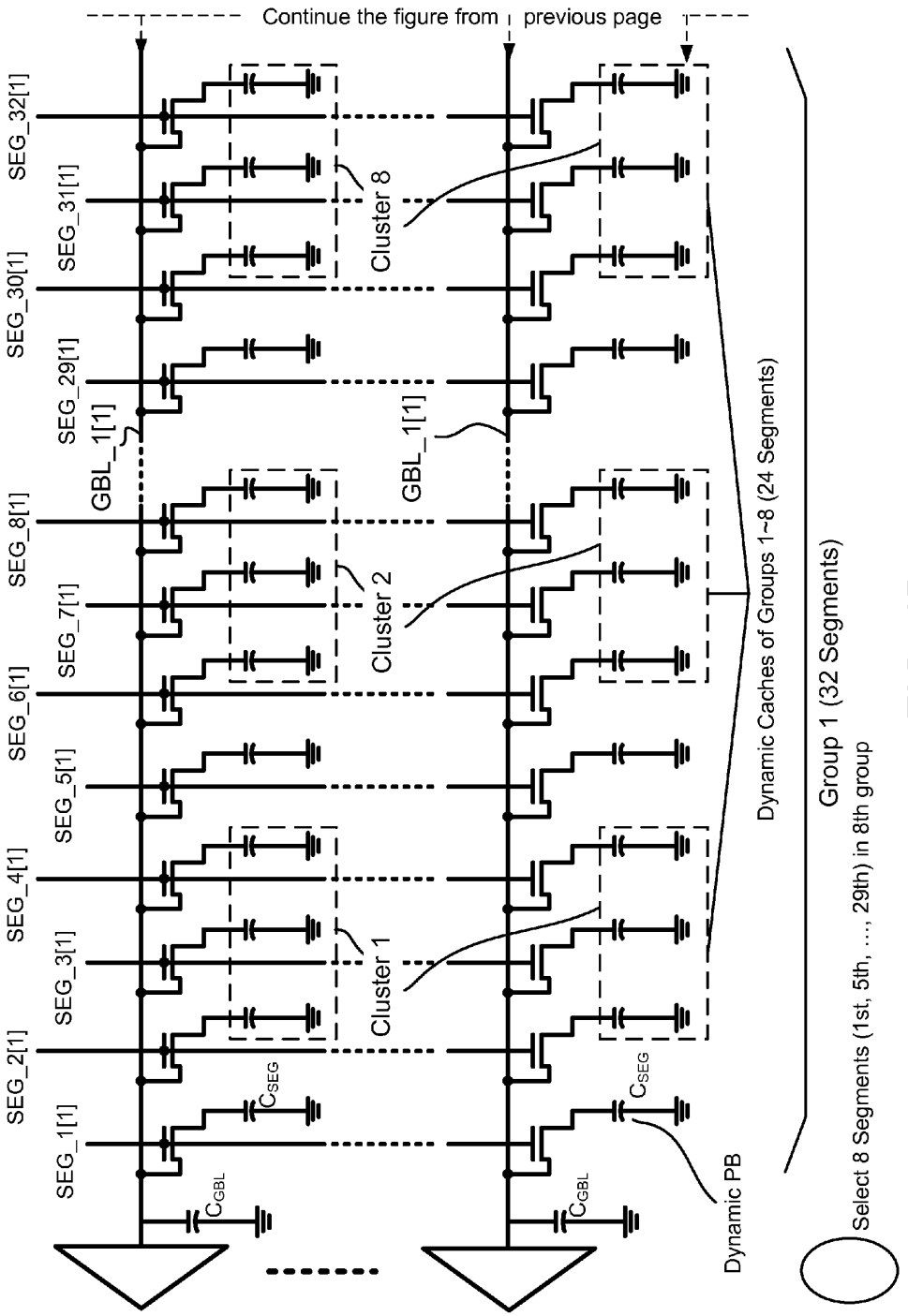
Continue the figure from previous page
SEG_1[1]
SEG_2[1]
SEG_3[1]
SEG_4[1]
SEG_5[1]
SEG_6[1]
SEG_7[1]
SEG_8[1]
SEG_29[1]
SEG_30[1]
SEG_31[1]
SEG_32[1]
GBL_1[1]
GBL_1[1]
Cluster 1
Cluster 2
Cluster 8
C_{GBL}
C_{SEG}
C_{GBL}
C_{SEG}
Dynamic PB
Dynamic Caches of Groups 1~8 (24 Segments)
Group 1 (32 Segments)
Select 8 Segments (1st, 5th, ..., 29th) in 8th group

FIG. 4D

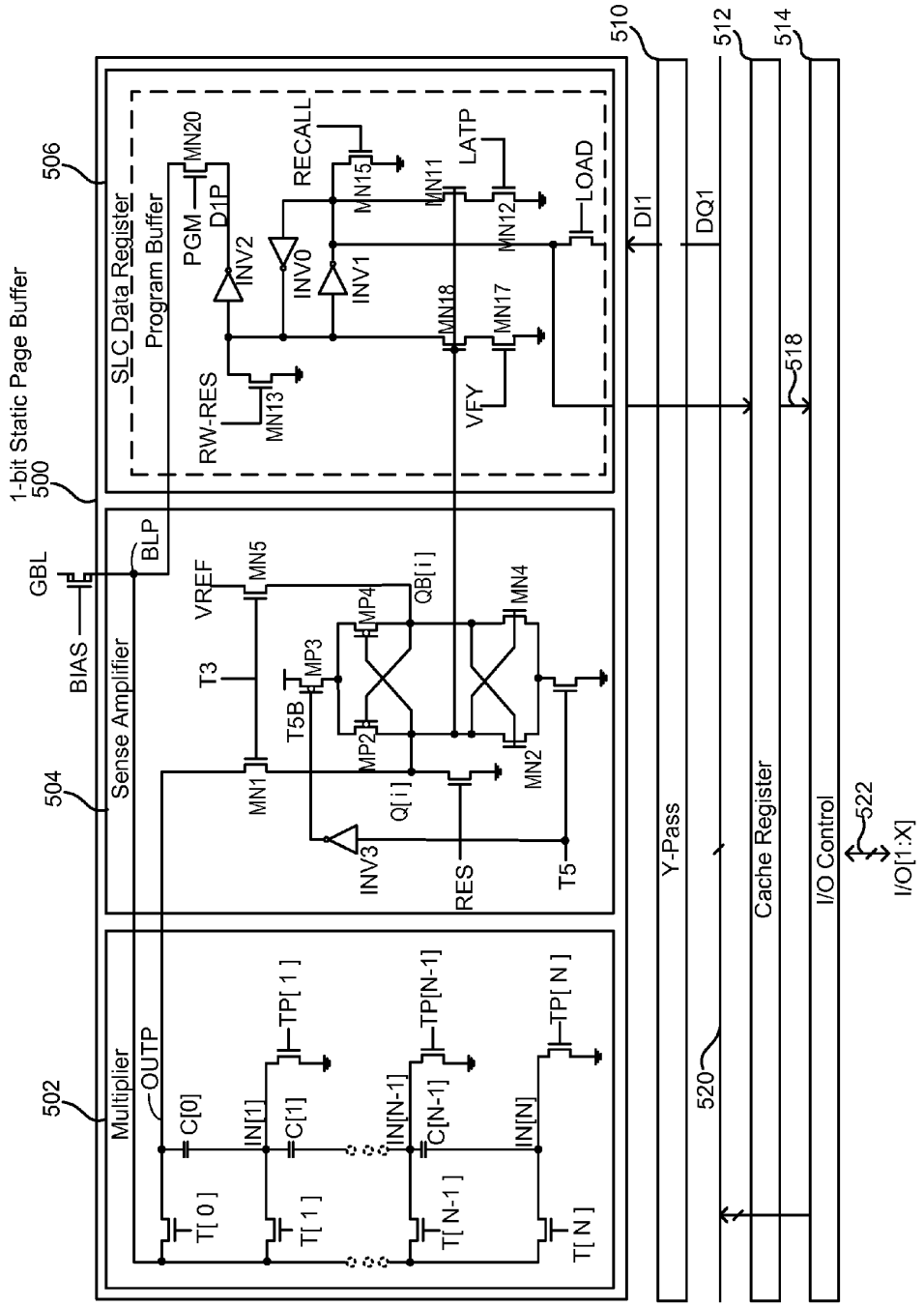
1-bit Static Page Buffer
500
506
SLC Data Register
Program Buffer
MN20
PGM
D1P
INV2
INV0
INV1
RECALL
MN15
MN11
LATP
MN12
LOAD
MN18
MN17
RW-RES
MN13
VFY
DI1
DQ1
510
512
514
518
GBL
BIAS
BLP
Sense Amplifier
504
VREF
MN5
T3
MP3
MP4
QB[i]
T5B
MP2
MN4
MN1
Q[i]
MN2
INV3
RES
T5
Multiplier
502
OUTP
C[0]
IN[1]
C[1]
IN[N-1]
C[N-1]
IN[N]
TP[1]
TP[N-1]
TP[N]
T[0]
T[1]
T[N-1]
T[N]
Y-Pass
520
Cache Register
I/O Control
522
I/O[1:X]

FIG. 5A

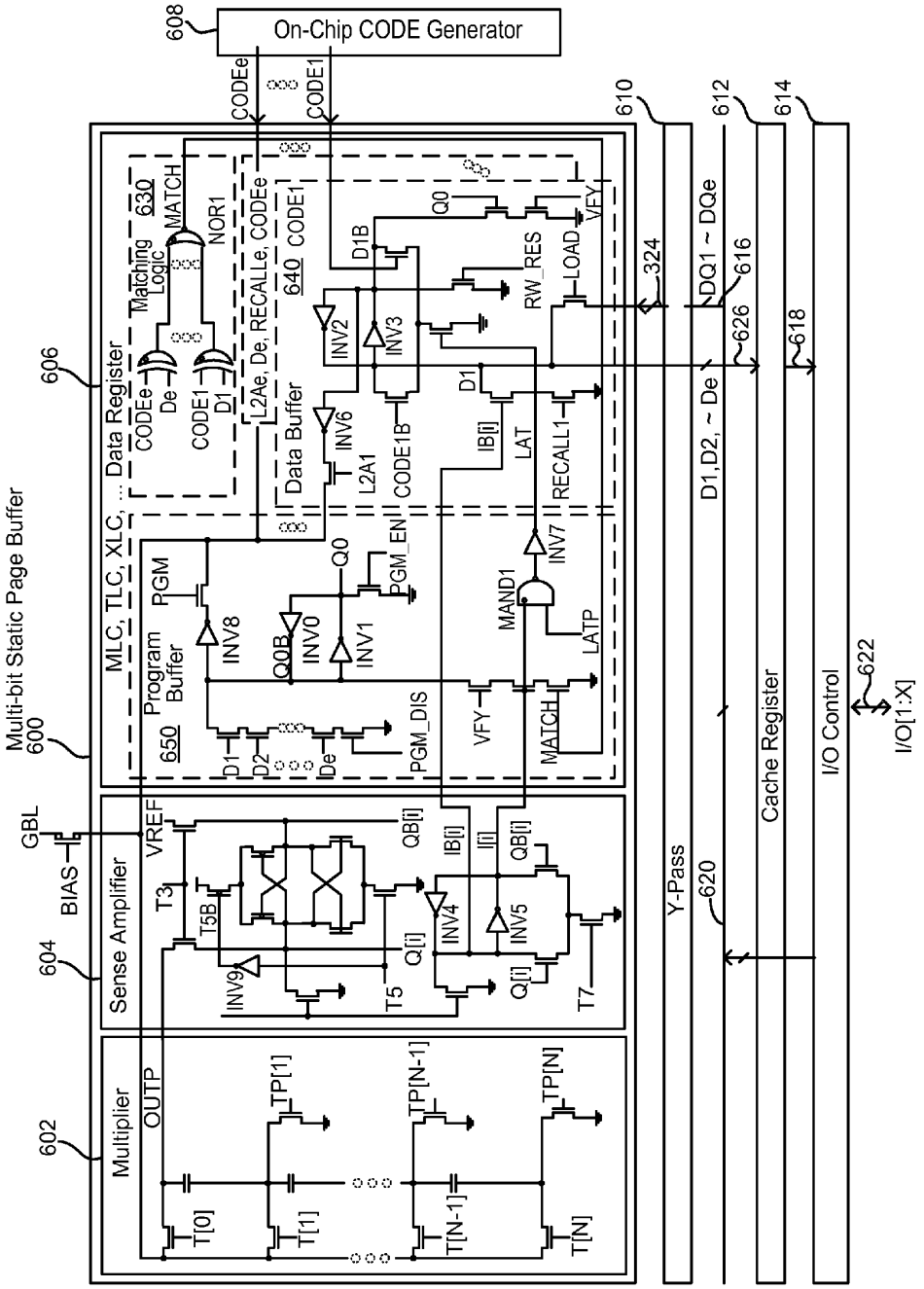
On-Chip CODE Generator
608
CODEe
CODE1
610
612
614
Multi-bit Static Page Buffer
600
606
MLC, TLC, XLC, ... Data Register
Matching Logic
630
MATCH
NOR1
CODEe
De
CODE1
D1
L2Ae, De, RECALLe, CODEe
640
CODE1
Data Buffer
D1B
Q0
VFY
RW_RES
LOAD
INV2
INV3
INV6
L2A1
CODE1B
D1
IB[i]
LAT
RECALL1
INV7
MAND1
LATP
PGM_EN
PGM
INV8
Q0B
INV0
INV1
Program Buffer
650
D1
D2
De
PGM_DIS
VFY
MATCH
324
DQ1 ~ DQe
616
626
618
D1,D2, ~ De
Y-Pass
620
Cache Register
I/O Control
622
I/O[1:X]
GBL
BIAS
604
Sense Amplifier
VREF
T3
T5B
INV9
T5
QB[i]
Q[i]
IB[i]
I[i]
INV4
INV5
T7
602
Multiplier
OUTP
TP[1]
TP[N-1]
TP[N]
T[0]
T[1]
T[N-1]
T[N]

FIG. 5B

SLC Read Timing Waveforms

RECALL=LOAD=VFY=PGM= 0V

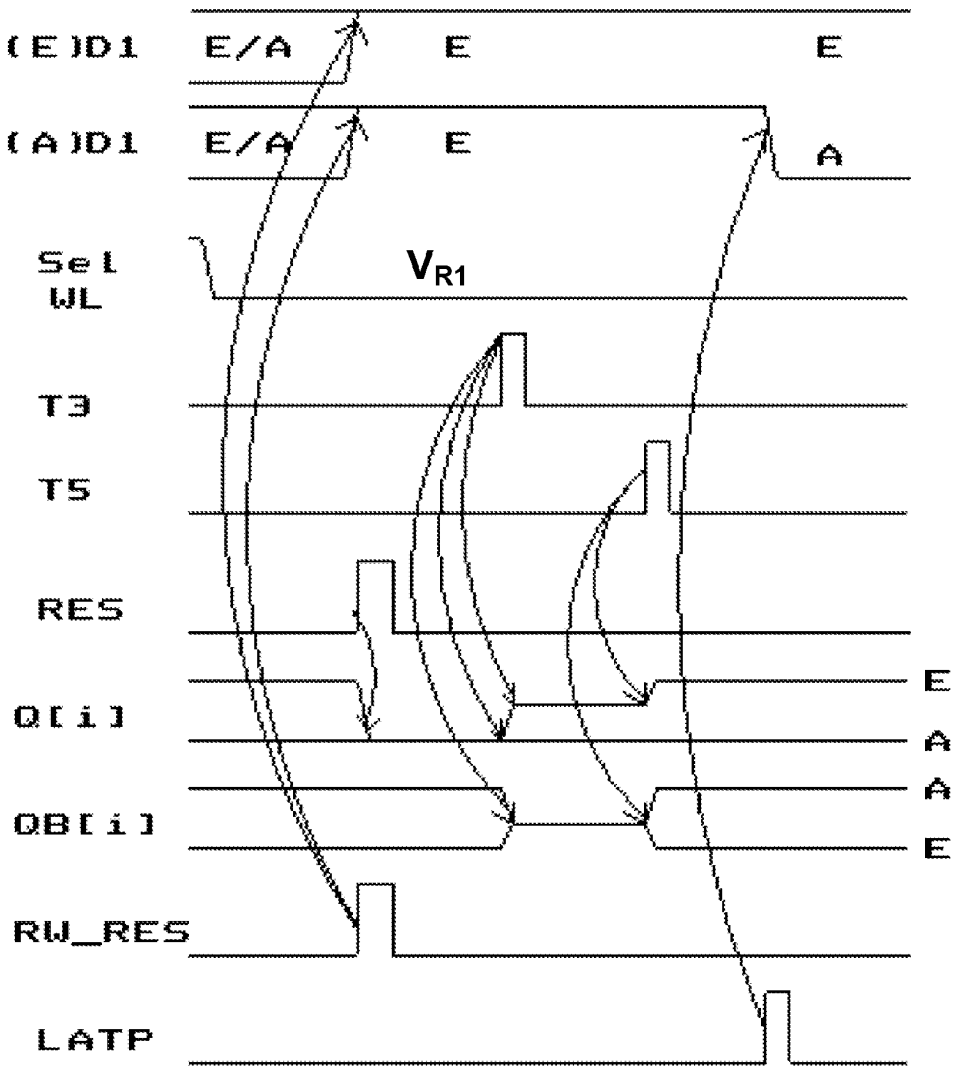

FIG. 6A

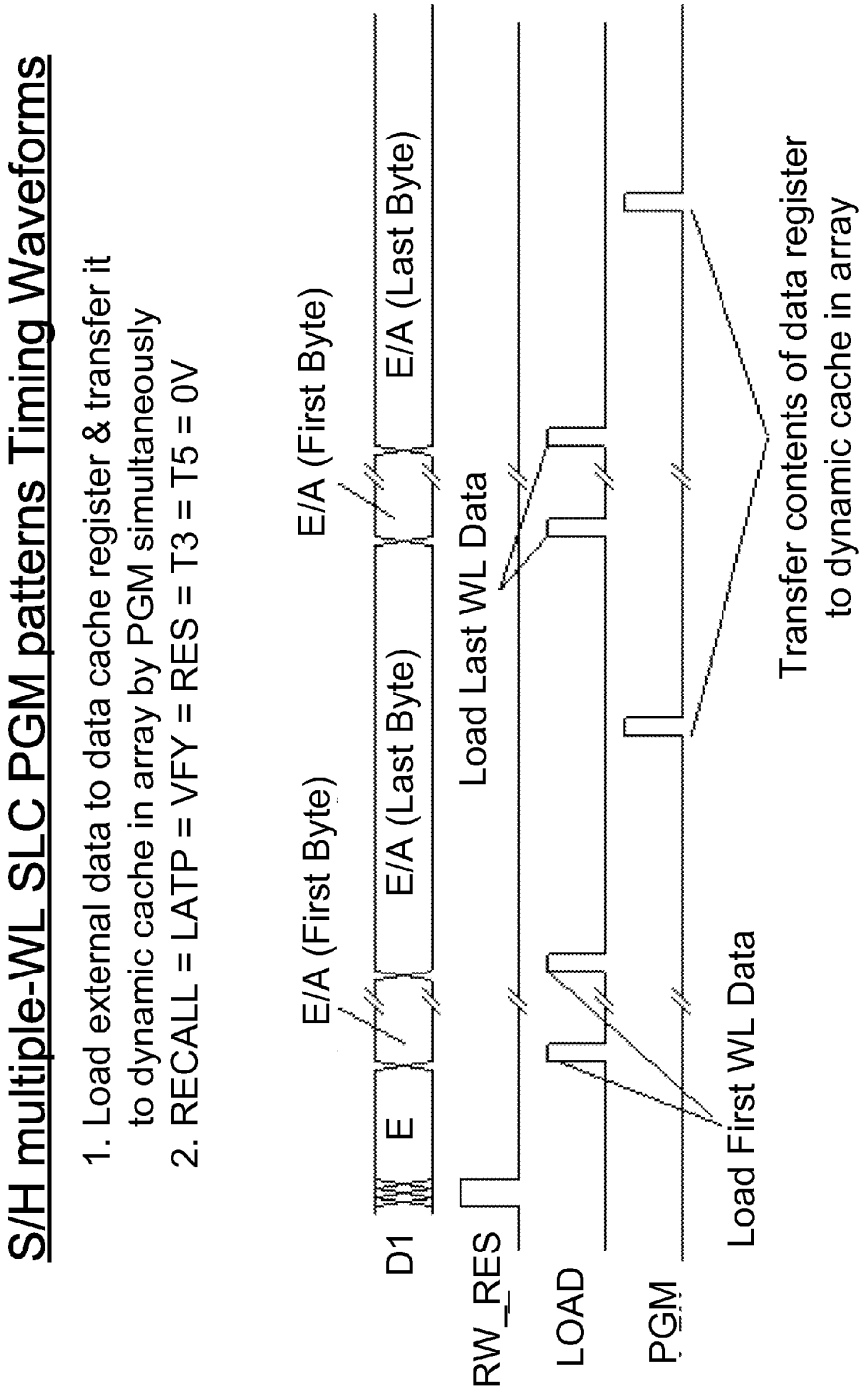
S/H multiple-WL SLC PGM patterns Timing Waveforms
1. Load external data to data cache register & transfer it to dynamic cache in array by PGM simultaneously
2. RECALL = LATP = VFY = RES = T3 = T5 = 0V
D1
E
E/A (First Byte)
E/A (Last Byte)
E/A (First Byte)
E/A (Last Byte)
RW_RES
LOAD
PGM
Load Last WL Data
Load First WL Data
Transfer contents of data register to dynamic cache in array

FIG. 6B

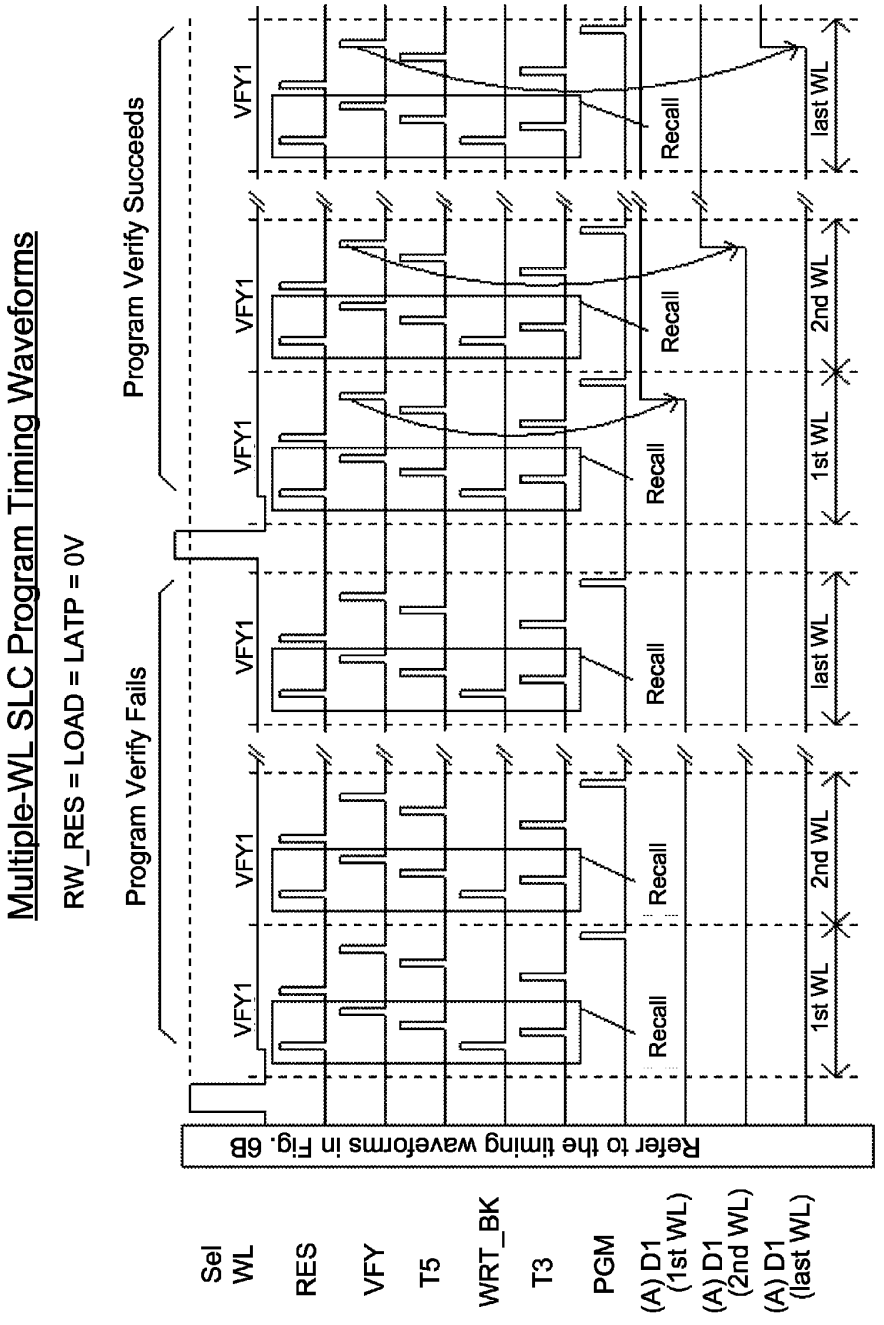
Multiple-WL SLC Program Timing Waveforms
RW_RES = LOAD = LATP = 0V
Program Verify Fails
Program Verify Succeeds
Refer to the timing waveforms in Fig. 6B
Sel WL
RES
VFY
T5
WRT_BK
T3
PGM
(A) D1 (1st WL)
(A) D1 (2nd WL)
(A) D1 (last WL)
VFY1
Recall
1st WL
2nd WL
last WL

FIG. 6C

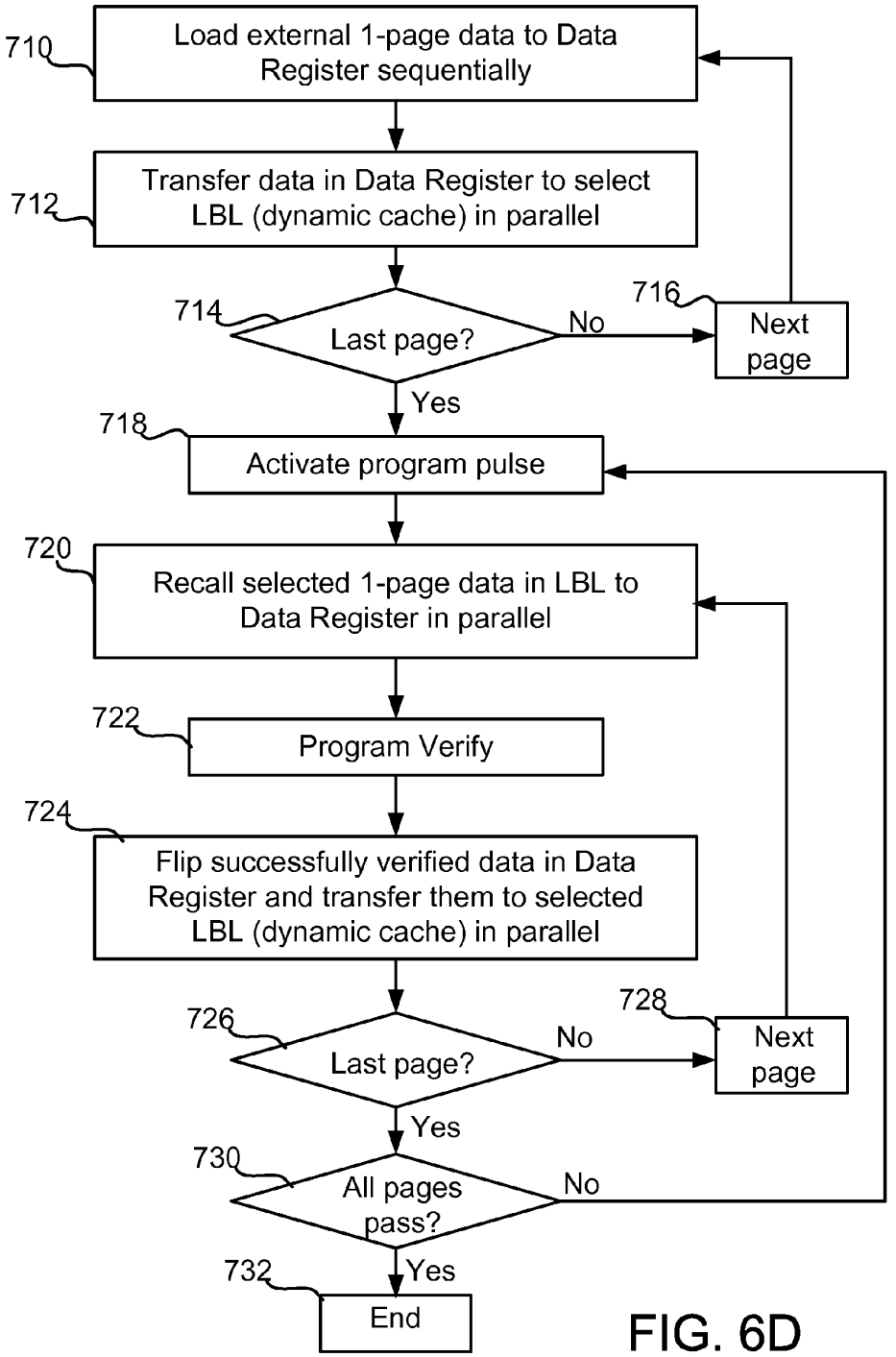
710
Load external 1-page data to Data Register sequentially
712
Transfer data in Data Register to select LBL (dynamic cache) in parallel
714
Last page?
No
716
Next page
Yes
718
Activate program pulse
720
Recall selected 1-page data in LBL to Data Register in parallel
722
Program Verify
724
Flip successfully verified data in Data Register and transfer them to selected LBL (dynamic cache) in parallel
726
Last page?
No
728
Next page
Yes
730
All pages pass?
No
Yes
732
End

FIG. 6D

SLC Read Timing Waveforms
VFY=PGM=LOAD=PGM_DIS= 0V
RECALL1~e=L2A1~e=PGM_EN= 0V
RW_RES= 0V

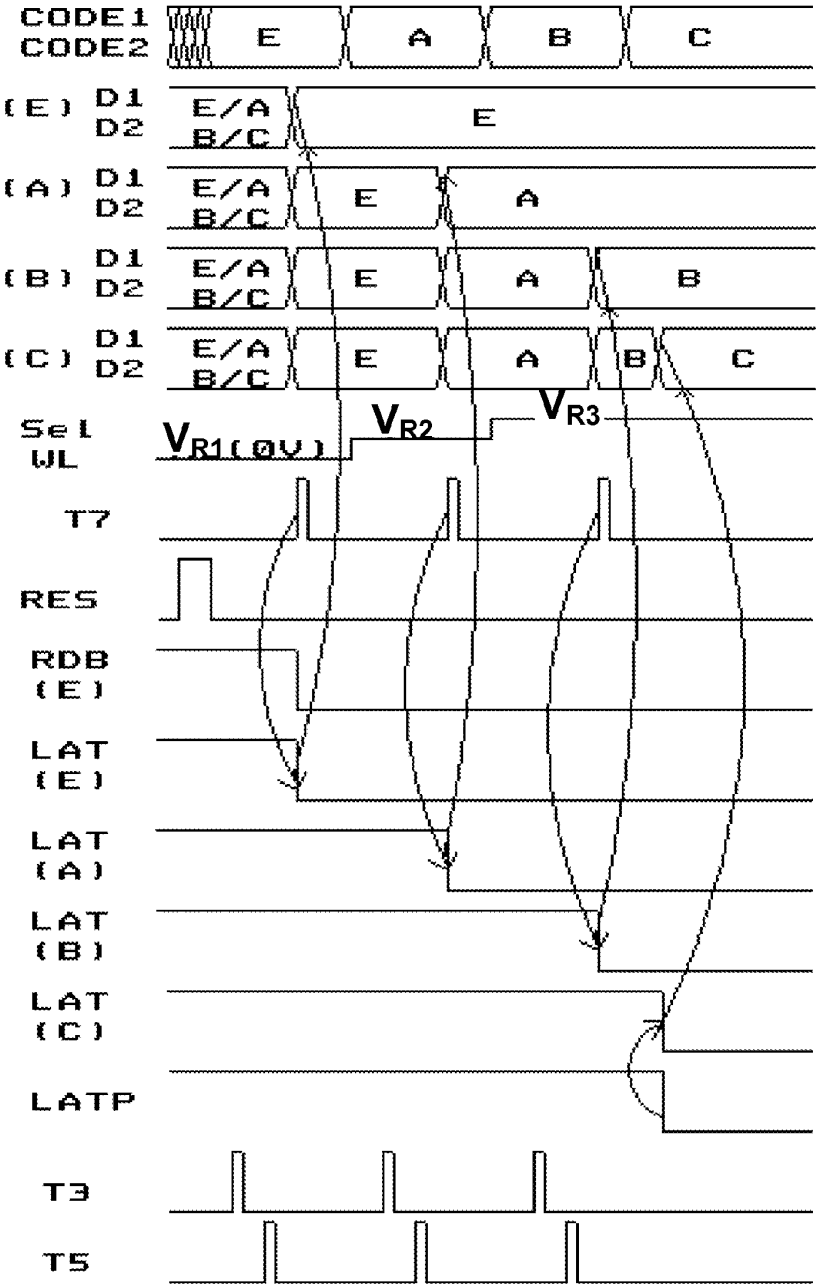

FIG. 7A

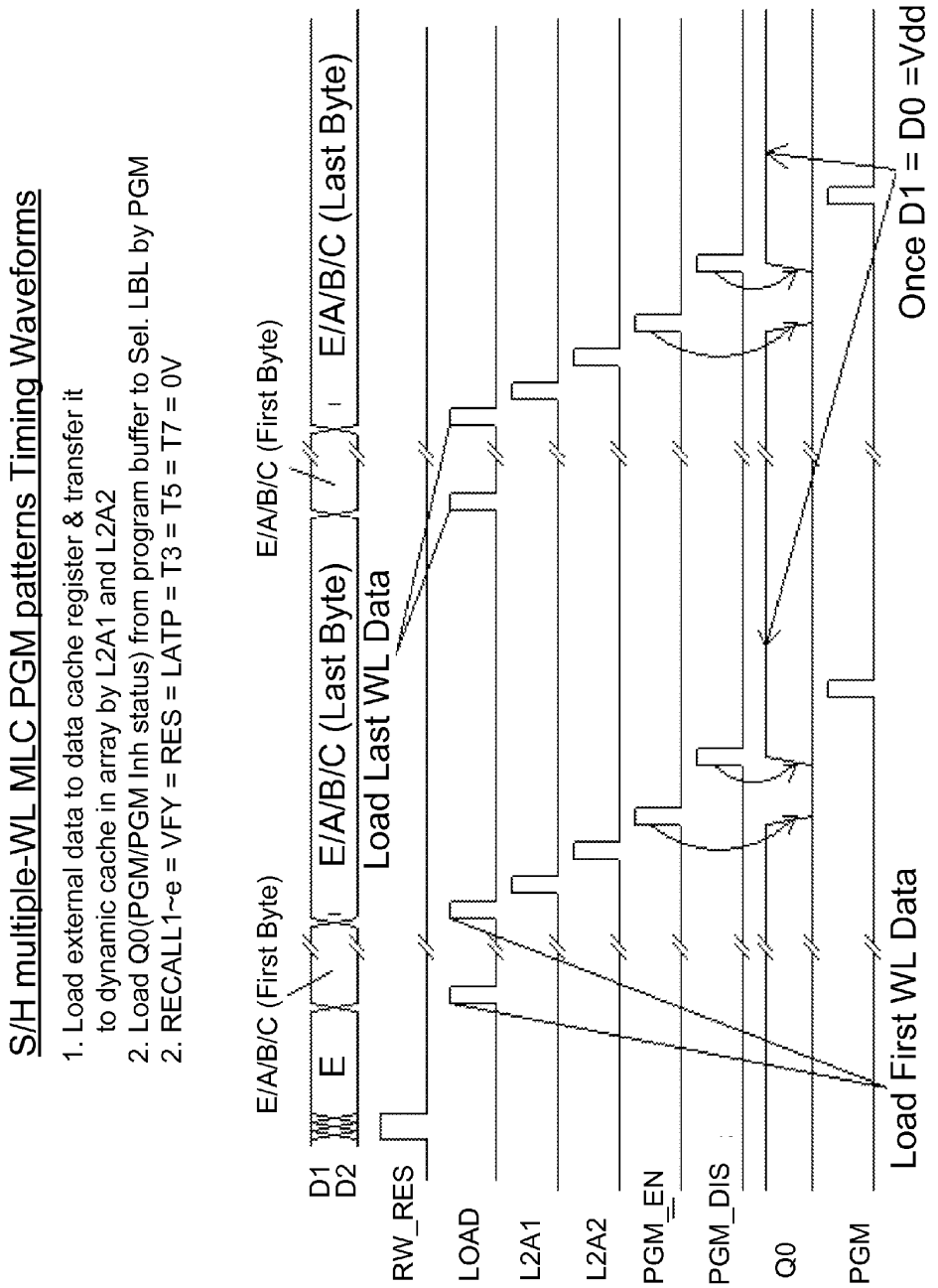
S/H multiple-WL MLC PGM patterns Timing Waveforms
1. Load external data to data cache register & transfer it to dynamic cache in array by L2A1 and L2A2
2. Load Q0(PGM/PGM Inh status) from program buffer to Sel. LBL by PGM
2. RECALL1~e = VFY = RES = LATP = T3 = T5 = T7 = 0V
D1
D2
E
E/A/B/C (First Byte)
E/A/B/C (Last Byte)
E/A/B/C (First Byte)
E/A/B/C (Last Byte)
Load Last WL Data
RW_RES
LOAD
L2A1
L2A2
PGM_EN
PGM_DIS
Q0
PGM
Load First WL Data
Once D1 = D0 =Vdd

FIG. 7B

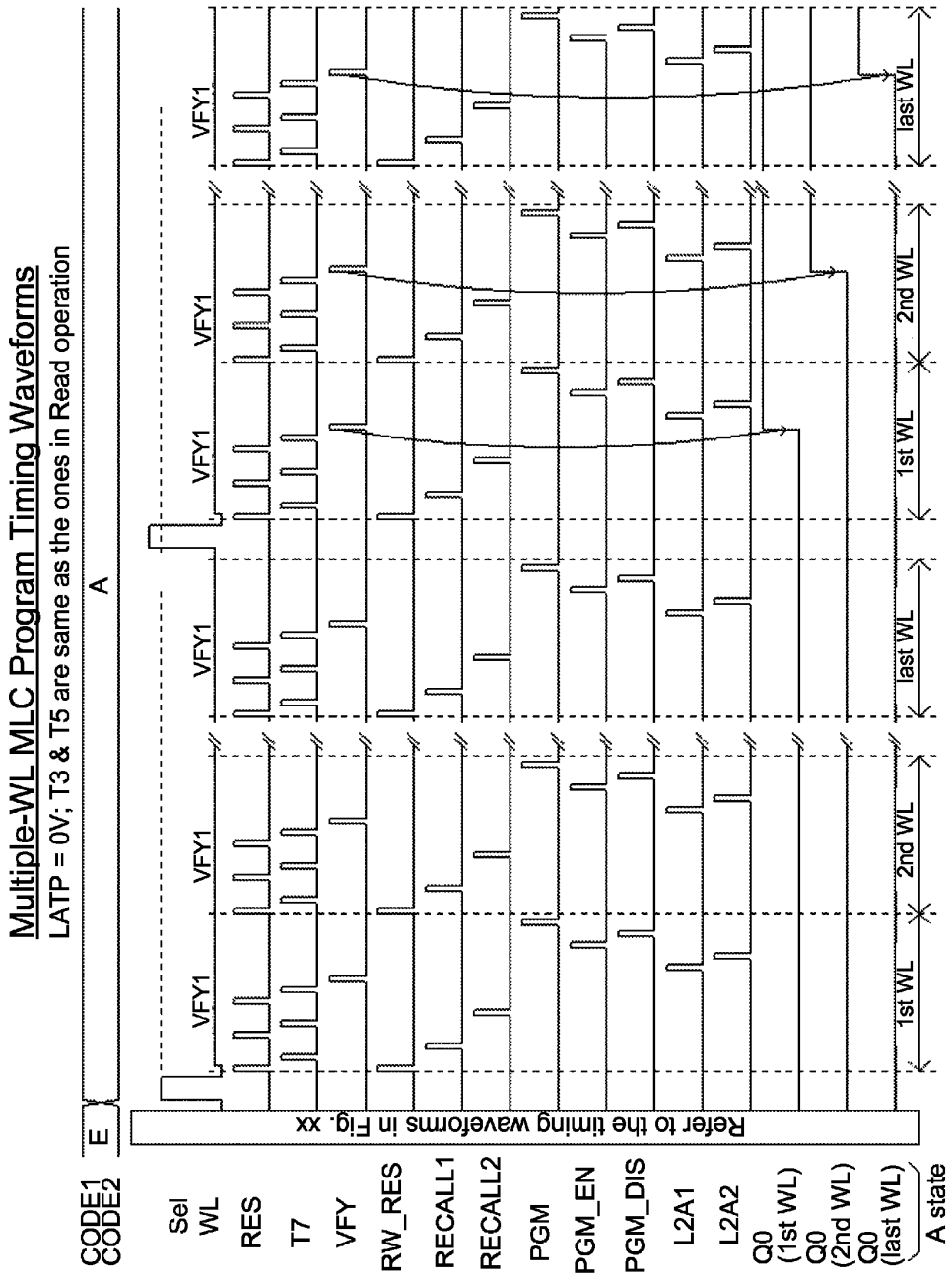
Multiple-WL MLC Program Timing Waveforms
LATP = 0V; T3 & T5 are same as the ones in Read operation
CODE1
CODE2
E
A
Sel WL
RES
T7
VFY
RW_RES
RECALL1
RECALL2
PGM
PGM_EN
PGM_DIS
L2A1
L2A2
Q0 (1st WL)
Q0 (2nd WL)
Q0 (last WL)
A state
Refer to the timing waveforms in Fig. xx
VFY1
1st WL
2nd WL
last WL

FIG. 7C

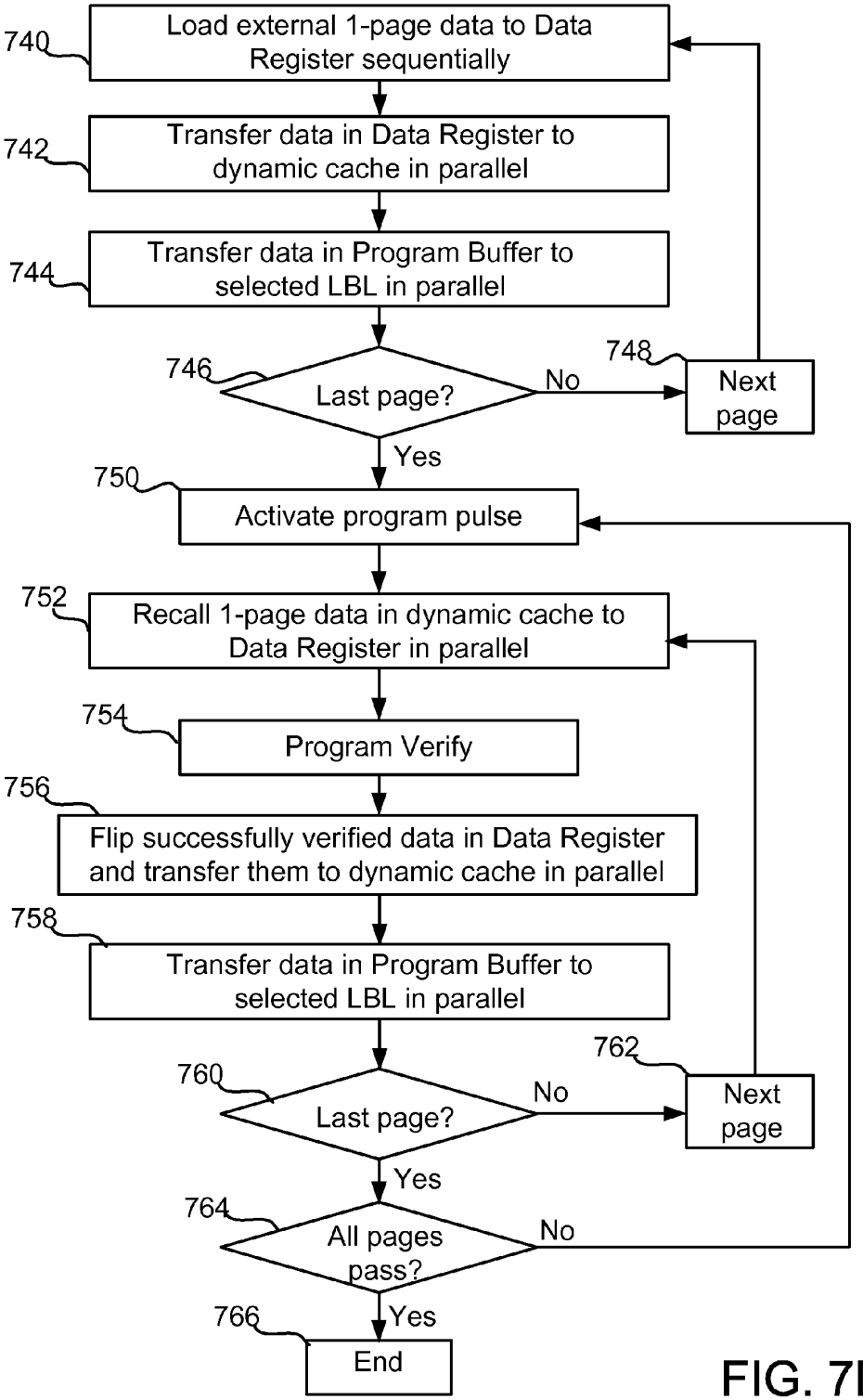
740
Load external 1-page data to Data Register sequentially
742
Transfer data in Data Register to dynamic cache in parallel
744
Transfer data in Program Buffer to selected LBL in parallel
746
Last page?
No
748
Next page
Yes
750
Activate program pulse
752
Recall 1-page data in dynamic cache to Data Register in parallel
754
Program Verify
756
Flip successfully verified data in Data Register and transfer them to dynamic cache in parallel
758
Transfer data in Program Buffer to selected LBL in parallel
760
Last page?
No
762
Next page
Yes
764
All pages pass?
No
Yes
766
End

FIG. 7D

Read Operation (Embodiment 1)			1)Pre-discharge GBL	2)Pre-charge GBL	3) Discharge GBL of On-cell	4) Charge Sharing	5) Multiply	6) Sensing	7) Copy Sensed Data to Cache	8) Read Page Cache Sequentially
DI			Vdd	**Vread**	Vread	Vread		**Vdd**	Repeat 4) to 6)	
DIV_EN	Sel Group		0V	0V	0V	**Vread**		**0V**	Repeat 4) to 6)	
	Unsel Group		0V	0V	0V	0V		0V	Repeat 4) to 6)	
CSL			0V	0V	0V	0V		0V	Repeat 4) to 6)	
PRE	Sel Group		Vdd	**Vread**	**0V**	0V		**Vdd**	Repeat 4) to 6)	
	Unsel Group		Vdd	**0V**	0V	0V		**Vdd**	Repeat 4) to 6)	
GBL_ps	Sel Group		0V	**Vdd**	**0V**	0V		0V	Repeat 4) to 6)	
	Unsel Group		0V	0V	0V	0V		0V	Repeat 4) to 6)	
SSL	Sel Block		0V	**Vdd**	Vdd	Vdd		**0V**	Repeat 4) to 6)	
	Unsel Block		0V	0V	0V	0V		0V	Repeat 4) to 6)	
GSL	Sel Block		0V	0V	**Vread**	Vread		**0V**	Repeat 4) to 6)	
	Unsel Block		0V	0V	0V	0V		0V	Repeat 4) to 6)	
WL	Sel Block	Sel WL	0V	**V_{Rn}**[c)]	V_{Rn}	V_{Rn}		**0V**	Repeat 4) to 6)	
		Unsel WL	0V	**Vread**	Vread	Vread		**0V**	Repeat 4) to 6)	
	Unsel Block		0V	0V	0V	0V		0V	Repeat 4) to 6)	
GBL	Sel Group		0V	**Vdd**	**Vdd or 0V**[a)]	**Vdd/M(J) or 0V**[b)]		**0V**	Repeat 4) to 6)	
	Unsel Group		0V	0V	0V	**Vdd/M(J) or 0V**[b)]		**0V**	Repeat 4) to 6)	

a) Vdd: Off-cell; 0V: On-cell
b) Vdd/M(J): Off-cell; 0V: On-cell; M(J) is a Function of J
c) V_{Rn} is WL read voltage for distinguish cell threshold states

FIG. 8

Read Operation (Embodiment 2)			1)Pre-discharge LBL/GBL	2)Pre-charge LBL/GBL	3) Discharge LBL/ GBL of On-cell	4) Charge Sharing	5) Multiply	6) Sensing	7) Copy Sensed Data to Cache	8) Read Page Cache Sequentially
DI			Vdd	**Vread**	Vread	Vread		**Vdd**	Repeat 4) to 6)	
DIV_EN	Sel Group		0V	0V	0V	**Vread**		**0V**	Repeat 4) to 6)	
	Unsel Group		0V	0V	0V	0V		0V	Repeat 4) to 6)	
CSL			0V	0V	0V	0V		0V	Repeat 4) to 6)	
PRE	Sel Group		Vdd	**Vread**	**0V**	0V		**Vdd**	Repeat 4) to 6)	
	Unsel Group		Vdd	**0V**	0V	0V		**Vdd**	Repeat 4) to 6)	
LBL_ps	Sel Group		0V	**Vdd**	**0V**	0V		0V	Repeat 4) to 6)	
	Unsel Group		0V	0V	0V	0V		0V	Repeat 4) to 6)	
SEG	Sel Group		Vdd	**Vread**	Vread	Vread		**Vdd**	Repeat 4) to 6)	
	Unsel Group		Vdd	**0V**	0V	0V		**Vdd**	Repeat 4) to 6)	
SSL	Sel Block		0V	**Vdd**	Vdd	Vdd		**0V**	Repeat 4) to 6)	
	Unsel Block		0V	0V	0V	0V		0V	Repeat 4) to 6)	
GSL	Sel Block		0V	0V	**Vread**	Vread		**0V**	Repeat 4) to 6)	
	Unsel Block		0V	0V	0V	0V		0V	Repeat 4) to 6)	
WL	Sel Block	Sel WL	0V	**V_{Rn} c)**	V_{Rn}	V_{Rn}		**0V**	Repeat 4) to 6)	
		Unsel WL	0V	**Vread**	Vread	Vread		**0V**	Repeat 4) to 6)	
	Unsel Block		0V	0V	0V	0V		0V	Repeat 4) to 6)	
LBL	Sel Group		0V	**Vdd**	**Vdd or 0V a)**	**Vdd/M(J) or 0V b)**		**0V**	Repeat 4) to 6)	
	Unsel Group		0V	0V	0V	0V		0V	Repeat 4) to 6)	
GBL	Sel Group		0V	Vdd	**Vdd or 0V a)**	**Vdd/M(J) or 0V b)**		**0V**	Repeat 4) to 6)	
	Unsel Group		0V	0V	0V	**Vdd/M(J) or 0V b)**		**0V**	Repeat 4) to 6)	

a) Vdd: Off-cell; 0V: On-cell
b) Vdd/M(J): Off-cell; 0V: On-cell; M(J) is a Function of J
c) V_{Rn} is WL read voltage for distinguish cell threshold states

FIG. 9

Multiple-WL Program Operation (Option 1 of Embodiment 1)			1)Pre-discharge GBL	2) Pre-charge GBL	3) S/H Paged Data on GBL	4) S/H Multi-paged Data	5) Program	6) Recall[b)]	7) Program Verify
DI	Sel Segment		Vdd	**Vpass**	Vpass	Repeat 2), 3)	Vpass	**Vread**	Similar to Read[d)]
	Unsel Segment		Vdd	**0V**	0V	Repeat 2), 3)	0V	0V	Similar to Read[d)]
DIV_EN	Sel Group		0V	0V	**Vpass**	Repeat 2), 3)	Vpass	**Vread**	Similar to Read[d)]
	Unsel Group		0V	0V	0V	Repeat 2), 3)	0V	0V	Similar to Read[d)]
CSL			Vdd	Vdd	Vdd	Repeat 2), 3)	Vdd	**0V**	Similar to Read[d)]
PRE	Sel Segment		Vdd	**Vpass**	**0V**	Repeat 2), 3)	0V	0V	Similar to Read[d)]
	Unsel Segment		Vdd	**0V**	0V	Repeat 2), 3)	0V	0V	Similar to Read[d)]
GBL_ps	Sel Segment		0V	**Vinh**	**0V**	Repeat 2), 3)	0V	0V	Similar to Read[d)]
	Unsel Segment		0V	0V	0V	Repeat 2), 3)	0V	0V	Similar to Read[d)]
SSL	Sel Block		0V	**Vpass**	**Vdd**	Repeat 2), 3)	Vdd	**0V**	Similar to Read[d)]
	Unsel Block		0V	0V	0V	Repeat 2), 3)	0V	0V	Similar to Read[d)]
GSL	Sel Block		0V	0V	0V	Repeat 2), 3)	0V	0V	Similar to Read[d)]
	Unsel Block		0V	0V	0V	Repeat 2), 3)	0V	0V	Similar to Read[d)]
WL	Sel Block	Unsel WL (erased)	0V	**Vdd**	Vdd	Repeat 2), 3)	**Vpass**	**Vread**	Same as Read[d)]
		Sel WL	0V	**Vdd**	Vdd	Repeat 2), 3)	**Vpgm**	**VFYn**	Same as Read[d)]
		Unsel Adj. WL (pgmed)	0V	**Vdd**	Vdd	Repeat 2), 3)	**Vpass**	**Vread**	Same as Read[d)]
		Unsel WL (pgmed)	0V	**Vdd**	Vdd	Repeat 2), 3)	**Vpass**	**Vread**	Same as Read[d)]
	Unsel Block		0V	0V	0V	Repeat 2), 3)	0V	0V	Same as Read[d)]
GBL	Inhibit-cell		0V	**Vdd**	Vdd	Repeat 2), 3)	Vdd	**Vdd/M(J)[c)] or 0V**	Similar to Read[d)]
	PGM-cell		0V	0V	0V	Repeat 2), 3)	0V	0V	Similar to Read[d)]

a) Vdd: Inhibit-cell; 0V: PGM-cell.
b) Refer to Fig. 6C and Fig. 7C.
c) Vdd/M(J): Inhibit-cell; M(J) is a Function of J.
d) Similar to 1) – 6) in Fig. 8; Selected WL is applied to VFYn set for next Program-Verify.

Vpgm > Vpass > Vinh > Vread

FIG. 10

Multiple-WL Program Operation (Option 2 of Embodiment 1)			1) Pre-discharge LBL/GBL	2) Pre-charge LBL	3) S/H Paged Data on LBL	4) S/H Multi-Paged Data	5) Program	6) Recall[b]	7) Program Verify
DI	Sel Segment		Vdd	**Vpass**	Vpass	Repeat 2), 3)	Vpass	**Vread**	Similar to Read[d]
	Unsel Segment		Vdd	**0V**	0V	Repeat 2), 3)	0V	0V	Similar to Read[d]
DIV_EN	Sel Group		0V	0V	**Vpass**	Repeat 2), 3)	Vpass	**Vread**	Similar to Read[d]
	Unsel Group		0V	0V	0V	Repeat 2), 3)	0V	0V	Similar to Read[d]
CSL			Vdd	Vdd	Vdd	Repeat 2), 3)	Vdd	**0V**	Similar to Read[d]
PRE	Sel Segment		Vdd	**Vpass**	**0V**	Repeat 2), 3)	0V	0V	Similar to Read[d]
	Unsel Segment		Vdd	**0V**	0V	Repeat 2), 3)	0V	0V	Similar to Read[d]
GBL_ps	Sel Segment		0V	**Vdd**	**0V**	Repeat 2), 3)	0V	0V	Similar to Read[d]
	Unsel Segment		0V	0V	0V	Repeat 2), 3)	0V	0V	Similar to Read[d]
SSL	Sel Block		0V	**Vpass**	**Vdd**	Repeat 2), 3)	Vdd	**0V**	Similar to Read[d]
	Unsel Block		0V	0V	0V	Repeat 2), 3)	0V	0V	Similar to Read[d]
GSL	Sel Block		0V	0V	0V	Repeat 2), 3)	0V	0V	Similar to Read[d]
	Unsel Block		0V	0V	0V	Repeat 2), 3)	0V	0V	Similar to Read[d]
WL	Sel Block	Unsel WL (erased)	0V	**Vdd**	Vdd	Repeat 2), 3)	**Vpass**	**Vread**	Same as Read[d]
		Sel WL	0V	**Vdd**	Vdd	Repeat 2), 3)	**Vpgm**	**VFYn**	Same as Read[d]
		Unsel Adj. WL (pgmed)	0V	**Vdd**	Vdd	Repeat 2), 3)	**Vpass**	**Vread**	Same as Read[d]
		Unsel WL (pgmed)	0V	**Vdd**	Vdd	Repeat 2), 3)	**Vpass**	**Vread**	Same as Read[d]
	Unsel Block		0V	0V	0V	Repeat 2), 3)	0V	0V	Same as Read[d]
GBL	Inhibit-cell		0V	**Vdd**	Vdd	Repeat 2), 3)	Vdd	**Vdd/M(J)[c] or 0V**	Similar to Read[d]
	PGM-cell		0V	0V	0V	Repeat 2), 3)	0V	0V	Similar to Read[d]

a) Vdd: Inhibit-cell; 0V: PGM-cell.
b) Refer to Fig. 6C and Fig. 7C.
c) Vdd/M(J): Inhibit-cell; M(J) is a Function of J.
d) Similar to 1) – 6) in Fig. 8; Selected WL is VFYn set for next Program-Verify.

Vpgm > Vpass > > Vinh > Vread

FIG. 11

Multiple WL Program Operation (Option 1 of Embodiment 2)			1)Pre-discharge LBL/GBL	2) Pre-charge LBL	3) S/H Paged Data on LBL	4) S/H Multi-Paged Data	5) Program	6) Recall[b]	7) Program Verify
DI	Sel Sector		Vdd	**Vpass**	Vpass	Repeat 3)	Vpass	**Vread**	Similar to Read[d]
	Unsel Sector		Vdd	**0V**	0V	Repeat 3)	0V	0V	Similar to Read[d]
DIV_EN	Sel Group		0V	0V	**Vpass**	Repeat 3)	Vpass	**Vread**	Similar to Read[d]
	Unsel Group		0V	0V	0V	Repeat 3)	0V	0V	Similar to Read[d]
CSL			Vdd	Vdd	Vdd	Repeat 3)	Vdd	**0V**	Similar to Read[d]
PRE	Sel Sector		Vdd	**Vpass**	**0V**	Repeat 3)	0V	0V	Similar to Read[d]
	Unsel Sector		Vdd	**0V**	0V	Repeat 3)	0V	0V	Similar to Read[d]
LBL_ps	Sel Sector		0V	**Vinh**	**0V**	Repeat 3)	0V	0V	Similar to Read[d]
	Unsel Sector		0V	0V	0V	Repeat 3)	0V	0V	Similar to Read[d]
SEG	Sel Sector		Vdd	**0V**	Vdd ⎍	Repeat 3)	0V	**Vread**	Similar to Read[d]
	Unsel Sector		Vdd	**0V**	0V	Repeat 3)	0V	0V	Similar to Read[d]
SSL	Sel Block		0V	**Vpass**	Vpass	Repeat 3)	Vpass	**0V**	Similar to Read[d]
	Unsel Block		0V	0V	0V	Repeat 3)	0V	0V	Similar to Read[d]
GSL	Sel Block		0V	0V	0V	Repeat 3)	0V	0V	Similar to Read[d]
	Unsel Block		0V	0V	0V	Repeat 3)	0V	0V	Similar to Read[d]
WL	Sel Block	Unsel WL (erased)	0V	**Vpass**	Vpass	Repeat 3)	Vpass	**Vread**	Same as Read[d]
		Sel WL	0V	**Vpass**	Vpass	Repeat 3)	**Vpgm**	**VFYn**	Same as Read[d]
		Unsel Adj. WL (pgmed)	0V	**Vpass**	Vpass	Repeat 3)	Vpass	**Vread**	Same as Read[d]
		Unsel WL (pgmed)	0V	**Vdd**	Vdd	Repeat 3)	Vdd	**Vread**	Same as Read[d]
	Unsel Block		0V	0V	0V	Repeat 3)	0V	0V	Same as Read[d]
LBL	Sel Sector		0V	**Vinh**	**Vinh or 0V[a]**	Repeat 3)	Vinh or 0V[a]	**Vinh/M(J)[c] or 0V**	Similar to Read[d]
	Unsel Sector		0V	0V	0V	Repeat 3)	0V	0V	Similar to Read[d]
GBL	Inhibit-cell		0V	**Vdd**	Vdd	Repeat 3)	Vdd	**Vinh/M(J)[c] or 0V**	Similar to Read[d]
	PGM-cell		0V	0V	0V	Repeat 3)	0V	0V	Similar to Read[d]

a) Vinh: Inhibit-cell; 0V: PGM-cell.

Vpgm > Vpass > Vinh > Vread

b) Refer to Fig. 6C and Fig. 7C.

c) Vinh/M(J): Inhibit-cell; M(J) is a Function of J.

d) Similar to 1) – 6) in Fig. 8; Selected WL is VFYn set for next Program-Verify.

FIG. 12

Multiple WL Program Operation (Option 2 of Embodiment 2)			1) Pre-discharge LBL/GBL	2) Pre-charge LBL	3) S/H Paged Data on LBL	4) S/H Multi-Paged Data	5) Program	6) Recall[b)]	7) Program Verify
DI	Sel Segment		Vdd	**Vpass**	Vpass	Repeat 3)	Vpass	**Vread**	Similar to Read[d)]
	Unsel Segment		Vdd	**0V**	0V	Repeat 3)	0V	0V	Similar to Read[d)]
DIV_EN	Sel Group		0V	0V	**Vpass**	Repeat 3)	Vpass	**Vread**	Similar to Read[d)]
	Unsel Group		0V	0V	0V	Repeat 3)	0V	0V	Similar to Read[d)]
CSL			Vdd	Vdd	Vdd	Repeat 3)	Vdd	**0V**	Similar to Read[d)]
PRE	Sel Segment		Vdd	**Vpass**	**0V**	Repeat 3)	0V	0V	Similar to Read[d)]
	Unsel Segment		Vdd	**0V**	0V	Repeat 3)	0V	0V	Similar to Read[d)]
LBL_pe	Sel Segment		0V	**Vdd**	**0V**	Repeat 3)	0V	0V	Similar to Read[d)]
	Unsel Segment		0V	0V	0V	Repeat 3)	0V	0V	Similar to Read[d)]
SEG	Sel Segment		Vdd	**0V**	**Vdd** ⎍	Repeat 3)	0V	**Vread**	Similar to Read[d)]
	Unsel Segment		Vdd	**0V**	0V	Repeat 3)	0V	0V	Similar to Read[d)]
SSL	Sel Block		0V	**Vpass**	**Vdd**	Repeat 3)	Vdd	**0V**	Similar to Read[d)]
	Unsel Block		0V	0V	0V	Repeat 3)	0V	0V	Similar to Read[d)]
GSL	Sel Block		0V	0V	0V	Repeat 3)	0V	0V	Similar to Read[d)]
	Unsel Block		0V	0V	0V	Repeat 3)	0V	0V	Similar to Read[d)]
WL	Sel Block	Unsel WL (erased)	0V	**Vdd**	Vdd	Repeat 3)	**Vpass**	**Vread**	Same as Read[d)]
		Sel WL	0V	**Vdd**	Vdd	Repeat 3)	**Vpgm**	**VFYn**	Same as Read[d)]
		Unsel Adj. WL (pgmed)	0V	**Vdd**	Vdd	Repeat 3)	**Vpass**	**Vread**	Same as Read[d)]
		Unsel WL (pgmed)	0V	**Vdd**	Vdd	Repeat 3)	**Vpass**	**Vread**	Same as Read[d)]
	Unsel Block		0V	0V	0V	Repeat 3)	0V	0V	Same as Read[d)]
LBL	Sel Segment		0V	**Vdd**	**Vdd or 0V[a)]**	Repeat 3)	Vdd or 0V[a)]	**Vdd/M(J)[c)] or 0V**	Similar to Read[d)]
	Unsel Segment		0V	0V	0V	Repeat 3)	0V	0V	Similar to Read[d)]
GBL	Inhibit-cell		0V	**Vdd**	Vdd	Repeat 3)	Vdd	**Vdd/M(J)[c)] or 0V**	Similar to Read[d)]
	PGM-cell		0V	0V	0V	Repeat 3)	0V	0V	Similar to Read[d)]

a) Vdd: Inhibit-cell; 0V: PGM-cell.

Vpgm > Vpass > Vread

b) Refer to Fig. 6C and Fig. 7C.

c) Vdd/M(J): Inhibit-cell; M(J) is a Function of J.

d) Similar to 1) – 6) in Fig. 8; Selected WL is VFYn set for next Program-Verify.

FIG. 13

Dispersed Block Erase Operation Embodiment 1 & 2 (Channel erase scheme)			Erase Setup1	Erase Setup2	Erase Start
DI	Sel Group		Vdd	Vdd (Floating)	Vers' (Floating)
	Unsel Group		Vdd	Vdd (Floating)	Vers' (Floating)
DIV_EN	Sel Group		Vdd	Vdd (Floating)	Vers' (Floating)
	Unsel Group		Vdd	Vdd (Floating)	Vers' (Floating)
CSL			Vdd-Vt	Vdd-Vt (Floating)	Vers' (Floating)
PRE	Sel Group		Vdd	Vdd (Floating)	Vers' (Floating)
	Unsel Group		Vdd	Vdd (Floating)	Vers' (Floating)
LBL_ps[2]	Sel Group		Vdd	Vdd (Floating)	Vers' (Floating)
	Unsel Group		Vdd	Vdd (Floating)	Vers' (Floating)
SEG[1]	Sel Group		Vdd	Vdd (Floating)	Vers' (Floating)
	Unsel Group		Vdd	Vdd (Floating)	Vers' (Floating)
SSL	Sel Block		Vdd-Vt	Vdd-Vt (Floating)	Vers' (Floating)
	Unsel Block		0V (Floating)	0V (Floating)	Vers' (Floating)
GSL	Sel Block		Vdd-Vt	Vdd-Vt (Floating)	Vers' (Floating)
	Unsel Block		0V(Floating)	0V (Floating)	Vers' (Floating)
WL	Sel Block	Sel WL	0V	0V	0V
		Unsel WL	Vdd-Vt	Vdd-Vt (Floating)	Vers' (Floating)
	Unsel Block		0V (Floating)	0V (Floating)	Vers' (Floating)
LBL[1]	Sel Group		Vdd-Vt	Vdd-Vt (Floating)	Vers' (Floating)
	Unsel Group		Vdd-Vt	Vdd-Vt (Floating)	Vers' (Floating)
GBL	Sel Group		Vdd-Vt	Vdd-Vt (Floating)	Vers' (Floating)
	Unsel Group		Vdd-Vt	Vdd-Vt (Floating)	Vers' (Floating)
TPW			0V	0V	Vers

1) No SEC and LBL in Embodiment 1
2) Same as GBL_ps in Embodiment 1

Vers=20V, Vers'=Vers + (Vdd-Vt)

FIG. 14

Dispersed Block Erase Operation Embodiment 1 & 2 (GIDL erase scheme)			Erase Setup1	Erase Setup2	Erase Start
DI	Sel Group		Vdd	Vers	Vers
	Unsel Group		Vdd	Vers	Vers
DIV_EN	Sel Group		Vdd	Vers	Vers
	Unsel Group		Vdd	Vers	Vers
CSL			Vdd-Vt	Vers	Vers
PRE	Sel Group		Vdd	Vers	Vers
	Unsel Group		Vdd	Vers	Vers
LBL_ps2)	Sel Group		Vdd	Vers	Vers
	Unsel Group		Vdd	Vers	Vers
SEG1)	Sel Group		Vdd	Vers	Vers
	Unsel Group		Vdd	Vers	Vers
SSL	Sel Block		Vdd-Vt	Vers' (Floating)	Vers' (Floating)
	Unsel Block		0V (Floating)	Vers' (Floating)	Vers' (Floating)
GSL	Sel Block		Vdd-Vt	Vers' (Floating)	Vers' (Floating)
	Unsel Block		0V(Floating)	Vers' (Floating)	Vers' (Floating)
WL	Sel Block	Sel WL	0V	0V	0V
		Unsel WL	Vdd-Vt	Vers' (Floating)	Vers' (Floating)
	Unsel Block		0V (Floating)	Vers' (Floating)	Vers' (Floating)
LBL1)	Sel Group		Vdd-Vt	Vers' (Floating)	Vers' (Floating)
	Unsel Group		Vdd-Vt	Vers' (Floating)	Vers' (Floating)
GBL	Sel Group		Vdd-Vt	Vers' (Floating)	Vers' (Floating)
	Unsel Group		Vdd-Vt	Vers' (Floating)	Vers' (Floating)

Vers=20V, Vers'=Vers + (Vdd-Vt)

1) No SEC and LBL in Embodiment 1
2) Same as GBL_ps in Embodiment 1

FIG. 15

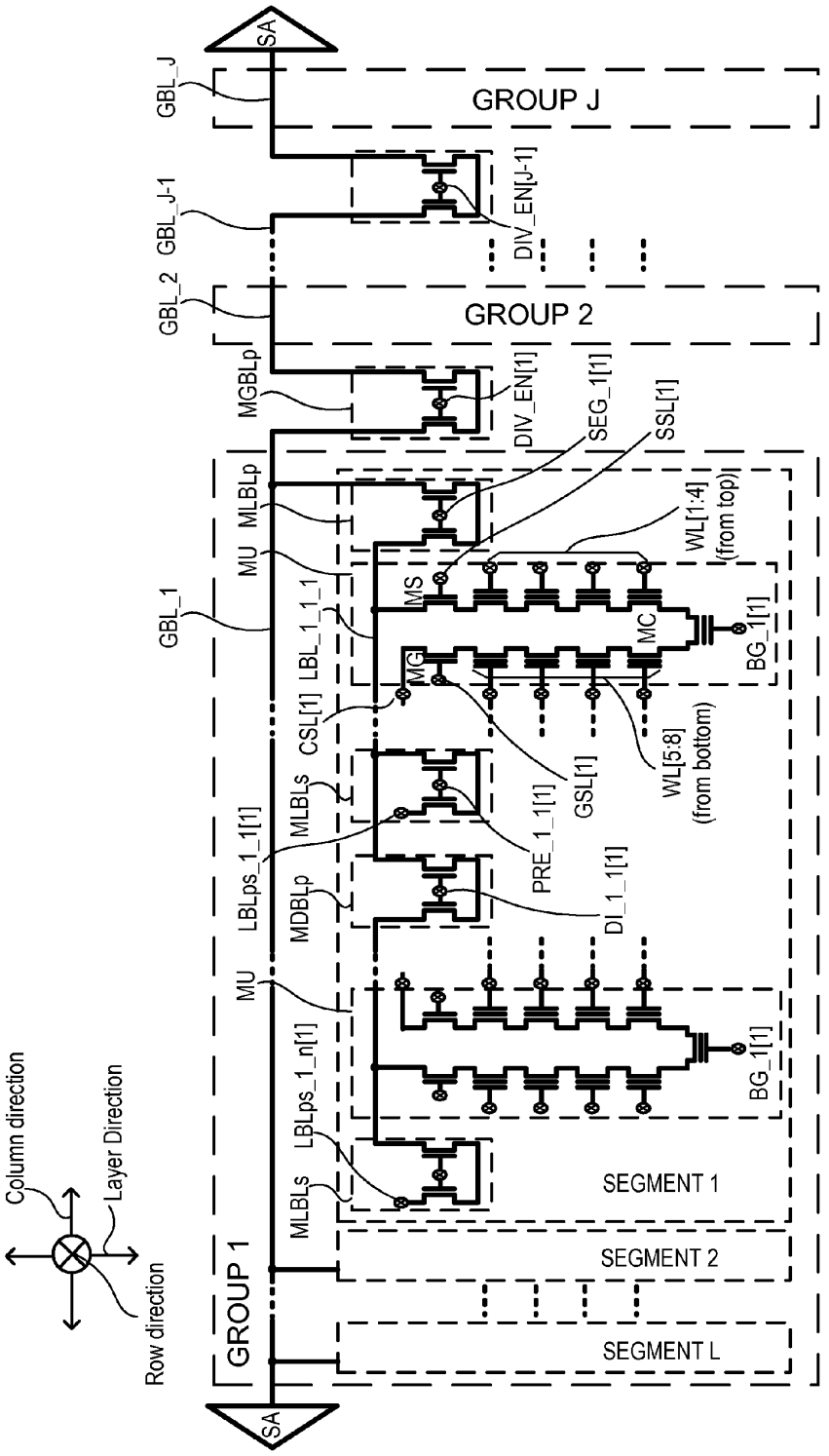
SA
GBL_J
GROUP J
GBL_J-1
DIV_EN[J-1]
GBL_2
GROUP 2
MGBLp
DIV_EN[1]
SEG_1[1]
SSL[1]
MLBLp
MU
GBL_1
LBL_1_1_1
WL[1:4]
(from top)
MS
MC
BG_1[1]
MG
CSL[1]
GSL[1]
WL[5:8]
(from bottom)
MLBLs
LBLps_1_1[1]
PRE_1_1[1]
MDBLp
DI_1_1[1]
MU
LBLps_1_n[1]
BG_1[1]
MLBLs
SEGMENT 1
SEGMENT 2
SEGMENT L
GROUP 1
SA
Column direction
Layer Direction
Row direction

FIG. 16

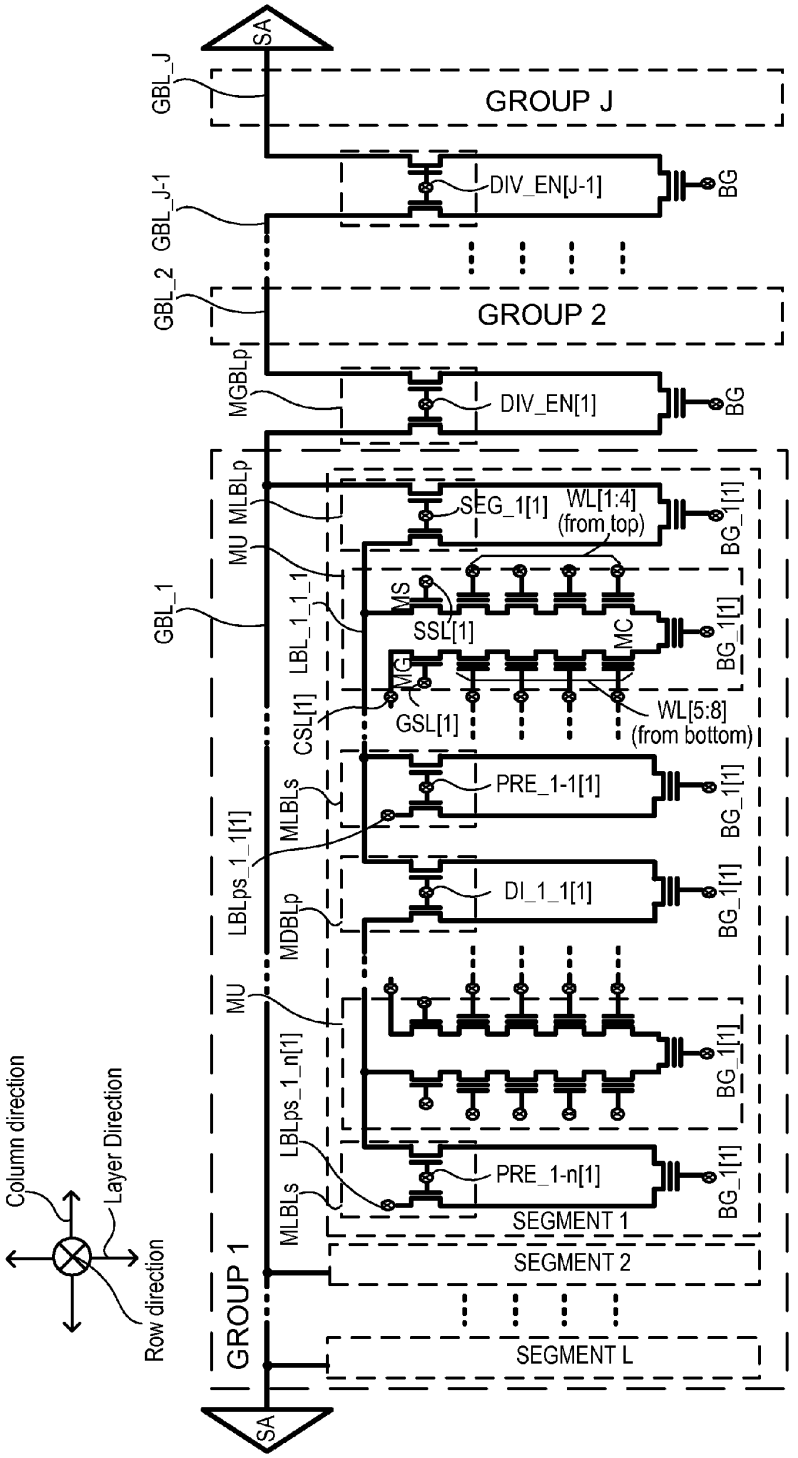
SA
GBL_J
GROUP J
GBL_J-1
DIV_EN[J-1]
BG
GBL_2
GROUP 2
MGBLp
DIV_EN[1]
BG
MU
MLBLp
SEG_1[1]
WL[1:4]
(from top)
BG_1[1]
GBL_1
LBL_1_1_1
MS
SSL[1]
MC
BG_1[1]
CSL[1]
MG
GSL[1]
WL[5:8]
(from bottom)
MLBLs
PRE_1-1[1]
BG_1[1]
LBLps_1_1[1]
MDBLp
DI_1_1[1]
BG_1[1]
MU
LBLps_1_n[1]
BG_1[1]
MLBLs
PRE_1-n[1]
BG_1[1]
SEGMENT 1
SEGMENT 2
SEGMENT L
GROUP 1
SA
Column direction
Layer Direction
Row direction

FIG. 17

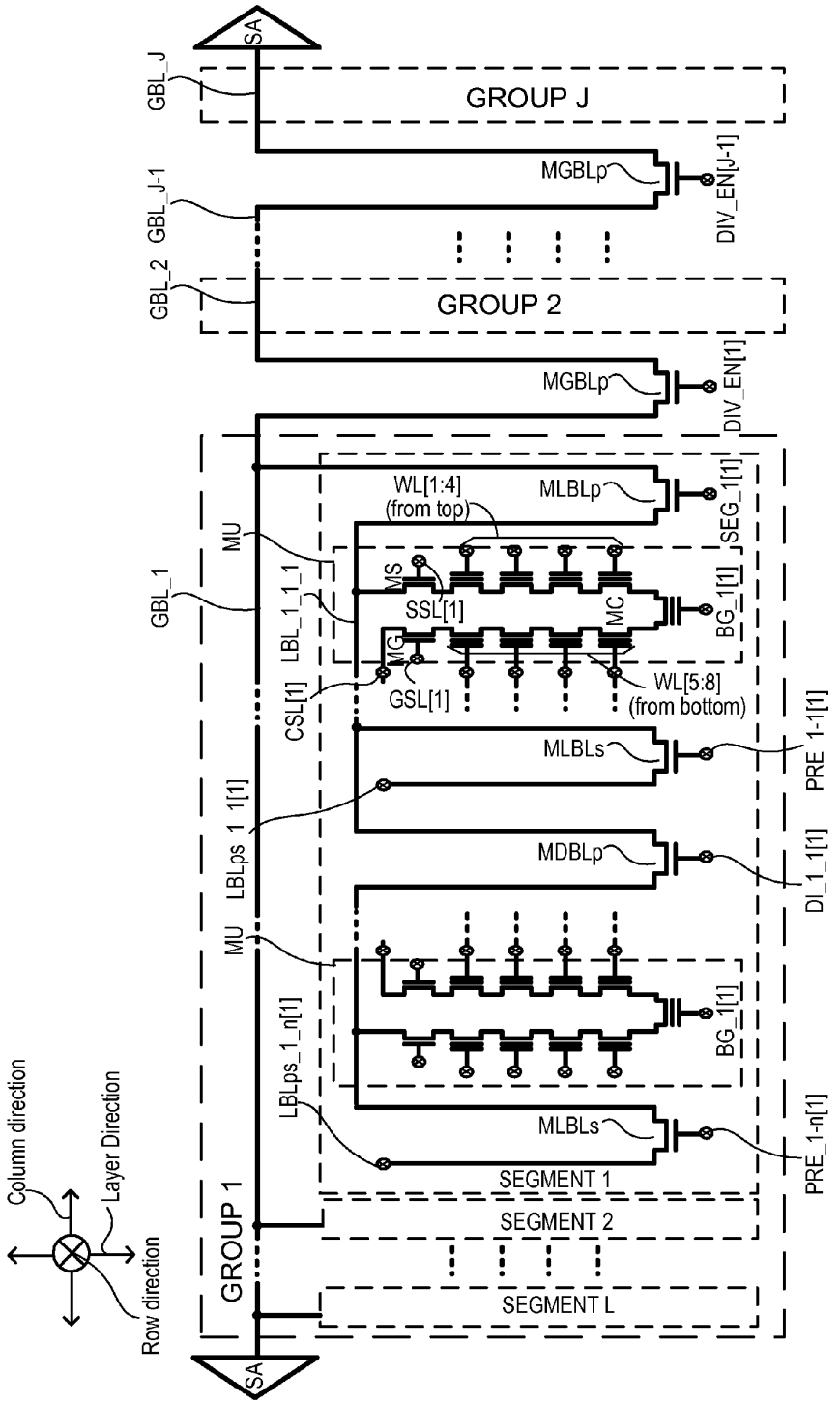
SA
GBL_J
GROUP J
MGBLp
DIV_EN[J-1]
GBL_J-1
GBL_2
GROUP 2
MGBLp
DIV_EN[1]
GBL_1
MU
WL[1:4]
(from top)
MLBLp
SEG_1[1]
MS
SSL[1]
MC
BG_1[1]
LBL_1_1_1
MG
CSL[1]
GSL[1]
WL[5:8]
(from bottom)
MLBLs
PRE_1-1[1]
LBLps_1_1[1]
MDBLp
DI_1_1[1]
MU
BG_1[1]
LBLps_1_n[1]
MLBLs
PRE_1-n[1]
SEGMENT 1
SEGMENT 2
SEGMENT L
GROUP 1
SA
Column direction
Layer Direction
Row direction

FIG. 18

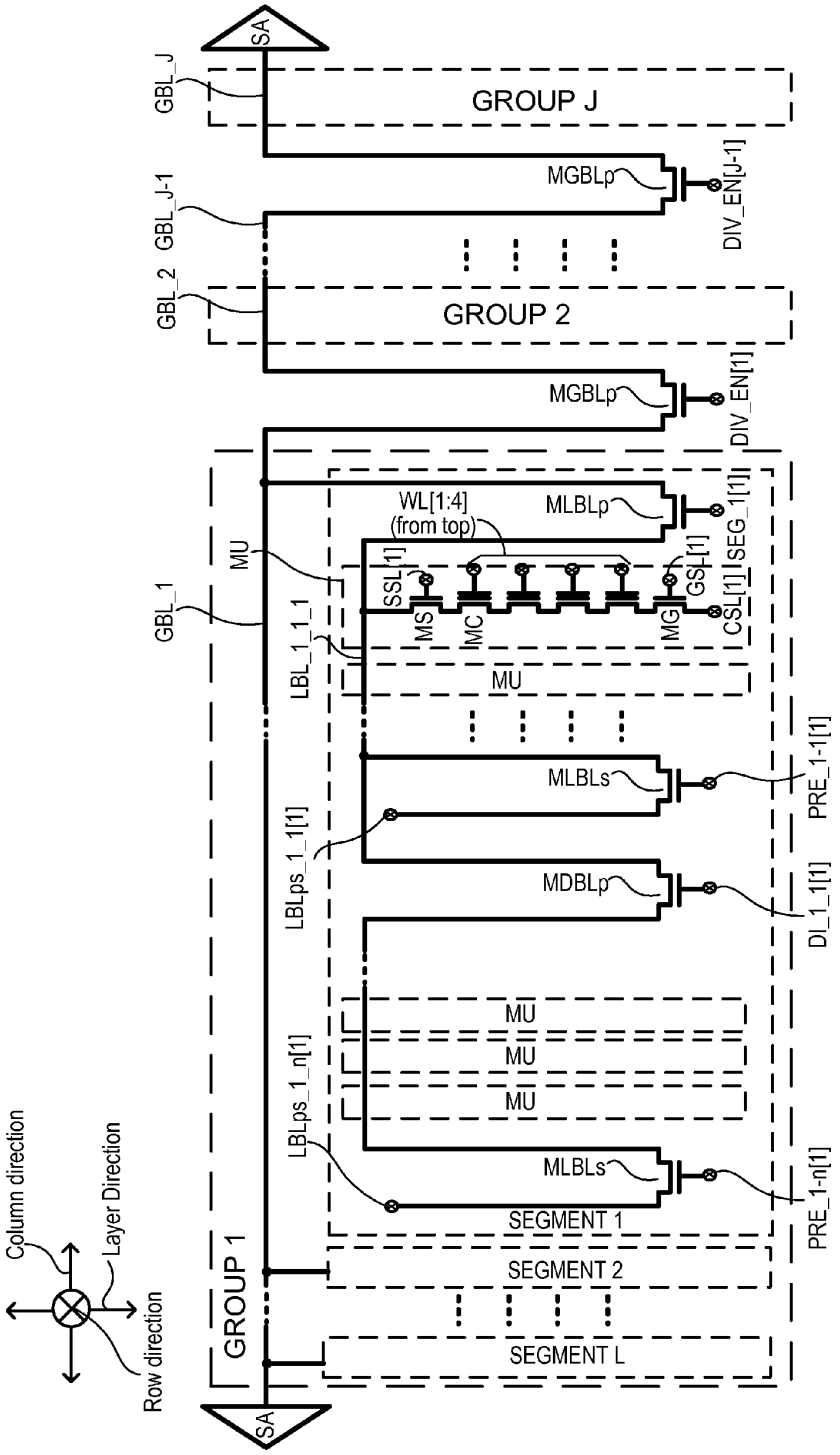
SA
GBL_J
GROUP J
MGBLp
DIV_EN[J-1]
GBL_J-1
GBL_2
GROUP 2
MGBLp
DIV_EN[1]
GBL_1
MU
WL[1:4]
(from top)
MLBLp
SEG_1[1]
SSL[1]
GSL[1]
CSL[1]
MS
MC
MG
LBL_1_1_1
MU
MLBLs
PRE_1-1[1]
LBLps_1_1[1]
MDBLp
DI_1_1[1]
MU
MU
MU
LBLps_1_n[1]
MLBLs
PRE_1-n[1]
SEGMENT 1
SEGMENT 2
SEGMENT L
GROUP 1
SA
Column direction
Layer Direction
Row direction

FIG. 19

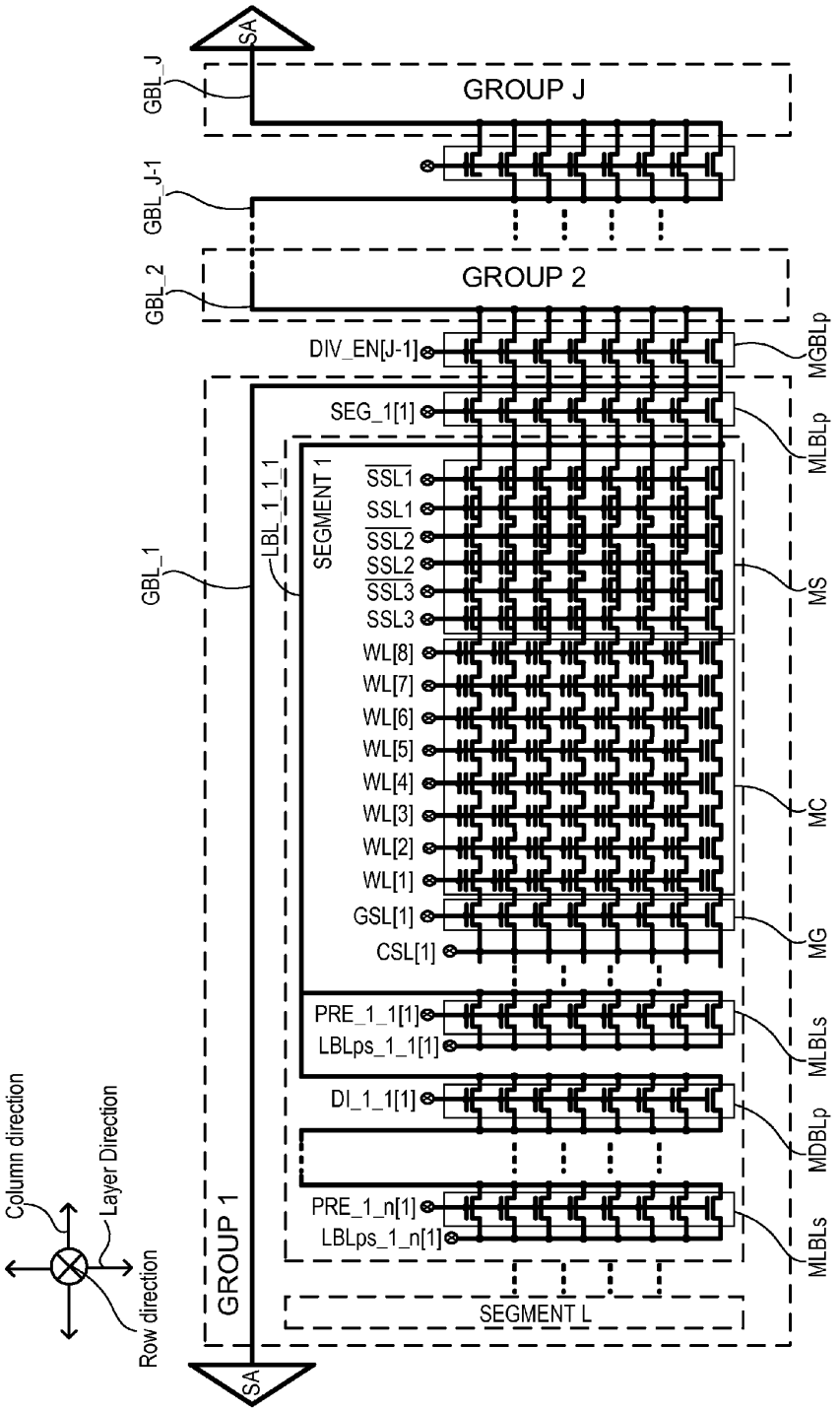
SA
GBL_J
GROUP J
GBL_J-1
GBL_2
GROUP 2
DIV_EN[J-1]
MGBLp
SEG_1[1]
MLBLp
GBL_1
LBL_1_1_1
SEGMENT 1
SSL1
SSL1
SSL2
SSL2
SSL3
SSL3
MS
WL[8]
WL[7]
WL[6]
WL[5]
WL[4]
WL[3]
WL[2]
WL[1]
MC
GSL[1]
CSL[1]
MG
PRE_1_1[1]
LBLps_1_1[1]
MLBLs
DI_1_1[1]
MDBLp
PRE_1_n[1]
LBLps_1_n[1]
MLBLs
GROUP 1
SEGMENT L
SA
Column direction
Layer Direction
Row direction

FIG. 20

	$\overline{SSL1}$	SSL1	$\overline{SSL2}$	SSL2	$\overline{SSL3}$	SSL3
Layer 1	1	0	1	0	1	0
Layer 2	0	1	1	0	1	0
Layer 3	1	0	0	1	1	0
Layer 4	0	1	0	1	1	0
Layer 5	1	0	1	0	0	1
Layer 6	0	1	1	0	0	1
Layer 7	1	0	0	1	0	1
Layer 8	0	1	0	1	0	1

FIG. 21

NAND ARRAY HIARCHICAL BL STRUCTURES FOR MULTIPLE-WL AND ALL-BL SIMULTANEOUS ERASE, ERASE-VERIFY, PROGRAM, PROGRAM-VERIFY, AND READ OPERATIONS

1. CROSS-REFERENCES TO RELATED APPLICATIONS

This application is a continuation application of U.S. patent application Ser. No. 14/341,739, filed on Jul. 25, 2014 and claims priority to U.S. Provisional Application No. 61/858,611, filed Jul. 25, 2013, commonly assigned and incorporated by reference herein for all purposes.

Additionally, this application is related to U.S. patent application Ser. No. 14/316,936, filed Jun. 27, 2014, and U.S. patent application Ser. No. 14/283,209, filed May 20, 2014, commonly assigned and incorporated by references herein for all purposes.

This application is also related to U.S. Patent Application No. 2012/0051137 A1, U.S. Pat. No. 8,189,391, U.S. Pat. No. 8,169,826, U.S. Pat. No. 8,194,453, U.S. Pat. No. 8,203,882, U.S. Pat. No. 8,334,551, U.S. Pat. No. 8,148,763, U.S. Pat. No. 8,335,111, U.S. Pat. No. 8,437,192, and U.S. Pat. No. 8,461,000, and U.S. Pat. No. 8,488,382 on 3D NAND array architecture and operation.

2. BACKGROUND OF THE INVENTION

The present invention generally relates to advanced NAND memory technology. More specifically, the invention provides a repeatedly electrically erasable and programmable 2D or 3D NAND memory array comprising a unified multi-level hierarchical broken Bit Line (BL) structure that enables superfast and low-power Multiple Word Line (WL) and All-BL Simultaneous Erase, Erase-Verify, Program, Program-Verify and Read operations.

Conventionally, a 2D NAND flash includes several 2-dimentional (2D) planes on a common Triple P-well within a deep N-well on top of a common silicon P-substrate. When 2D NAND flash technology is scaled down below 2×nm for increasing NAND memory size, it hits the wall to meet the Moore's scaling law, good data reliability and short latency. The reliability issues include short data retention life cycle, high power-consumption and low Program, Erase and Read cycles. The slow latency issues include slow page-Read, page-Program, page-Program-verification, block-Erase and page-Erase-verification, etc.

The WL page size can be defined either in a large physical page size such as whole WL or a smaller logic size such as ½ or ¼ of a whole physical WL. The NAND's data storage types can be SLC, MLC, TLC, XLC or even an analog one that stores more than 16 states per one physical NAND cell, regardless of 2D or 3D NAND memory.

Recently, many new 3D NAND flash memory cells and array architectures have been proposed by using 3D transistors and Strings with a cylindrical column type structures such as a multiple-layer stacked vertical-channel (VChl) 3D NAND technology from Toshiba, SanDisk and Samsung, or a vertical-gate (Vgat) NAND String technology from Samsung, and Macronix (Taiwan) and other 3D NAND flash technologies from Hynix, and Micron.

Although a 3D NAND flash memory has many advantages to use the less advanced technology nodes to increase NAND density over 1 Tb with a smaller silicon area than 2D NAND, it encounters new process disadvantages such as high aspect ratio, stair-case etching etc, more WL disturbance and new challenges to use the new scheme of gate-induced-drain-leakage (GIDL) current to erase the 3D NAND flash cells, etc.

Irrespective of 2D or 3D NAND flash pros and cons under development, there are many common long-held old and new problems not being completely solved and instead being mitigated when further scaling below 2×nm. For example, the conventional 20-year good SBPI (Self-Boosting-Program-Inhibit) scheme has been found un-reliable in Program and Program-Inhibit operations due to larger proximity coupling effects such as the charging and discharging of adjacent BL-BL coupling noises.

In other words, the conventional SBPI operations are strongly affected by the stored Vts of two surrounding NAND cells dispersed in the adjacent left and right BLs. These coupling noise effects greatly degrade the NAND data reliability and integrity, thus more errors and less P/E/R cycles are produced. As a result, more sophisticated ECC algorithms are required to use those NAND memories made of more advanced nodes below 3×nm.

As NAND density will be quickly exceeding 1 Tb with the circuit layout scaled down to 10 nm or below, more power consumptions and latencies in Read, Program, and Erase operations are commonly found in product specs. It is desirable to improve NAND memory technology to solve the above problems. The present invention provides a superfast, superior, and unified broken-BL hierarchical NAND array structure plus DRAM-like BL Charge-sharing and Sensing plus a novel Recall circuit aimed for implementing Multiple-WL and All-BL simultaneous Erase, Erase-Verify, Program, Program-Verify, and Read operations on today's 2D and 3D NAND flash designs without cell and process changes, as described throughout the specification and all figures.

3. BRIEF SUMMARY OF THE INVENTION

This invention relates to advanced NAND memory technology. More specifically, the invention provides a 2D or 3D HiNAND memory array including a unified multi-level hierarchical broken-Bit-Line (BL) structure configured to be repeatedly electrically erasable and programmable for enabling superfast and low-power Multiple Word Line (WL) and All-BL Simultaneous Erase, Erase-verify, Program, Program-verify, and Read operations. Due to very broad aspects of the combinational architectures of HiNAND arrays of the present invention, the following summary cannot include all key features of the inventions. Thus the summary below should not be treated as a limitation of the present invention. One of skilled in the field should recognize many variations and alternatives within the scope of claims herein.

When HiNAND array uses only one preferred tight 2λ vertical metal1 for a 1-level BL array scheme, then it is referred as HiNAND1. When HiNAND array uses two preferred vertical tight 2λ metal1 and 2λ or 4λ metal2 lines if odd/even GBL scheme is used for a 2-level BL architecture, then it is referred as HiNAND2. Accordingly, when HiNAND array uses one vertical tight 2λ metal1, but less tight metal2 and metal3 for a 3-level BL architecture, then it is referred as HiNAND3. All above HiNAND2 or HiNAND1 arrays use a horizontal metal0 for connecting the common source nodes of a plurality of NAND Strings and $V_{inhibit}$ power supply lines. HiNAND3 has been filed by the same inventors of this application, thus the details are skipped here.

For description simplicity, the term of "Multiple-WL and All-GBL simultaneous Operations" is simply used to represent "Multiple-WL and All-GBL simultaneous Erase, Erase-Verify, Program, Program-verify and Read Operations" for the subsequent description below.

The first objective of the present invention is to propose a 1-level broken metal1 global bit line (GBL) hierarchical structure for a HiNAND1 array to perform the preferred Multiple-WL and All-GBL simultaneous operations. The HiNAND1 array includes J NAND Groups with J−1 Group-divided transistors MGBL extending from array top to bottom in GBL or Y-direction, connected by one broken-GBL metal1 line associated with a broken parasitic capacitor C_{GBL}. Each HiNAND1 Group is further divided by L Segments in series with L−1 Segment-divided NMOS transistors of MDBLp and each Segment is comprised of K identical NAND Blocks, with layout extending in Y-direction. Lastly, each NAND Block is further comprised of N identical NAND Strings cascaded in WL or X-direction. J, L, K, and N are integers. Each NAND-String includes M 2D NMOS NAND cells in series with one top String-select transistor MS and one bottom String-select transistor MG. The value of M can be 8, 16, 32, 64, 128 or any arbitrary integer number. In this application, one String includes 64 WLs or NAND cells as an example. Each physical NAND cell can store 2-state SLC, 4-state MLC, 8-state TLC or 16-state XLC or even 256-state analog values.

In an embodiment, the length of each metal1 GBL line extending one HiNAND1 Group is the longest metal1 line unit for charge-sharing simultaneous Multiple-WL Read operation of the HiNAND1 array. Thereby, this metal1 line is preferably referred as a broken Group metal1 line. Additionally, each broken Group metal1 line per Group can be further divided into L smaller broken Segment metal1 lines by L−1 Segment-divided NMOS transistors of MDBLp. Thus, the length of broken Segment metal1 line associated with one Segment is 1/L of each broken Group metal1 line. The broken Segment metal1 line is located at a same level topologically as the broken Group metal1 line.

In another embodiment, the length of each broken Segment metal1 line extending one HiNAND1 Segment is the shortest metal1 line unit for simultaneous Multiple-WL Program operation of HiNAND1 array.

The second objective of the present invention is to propose a 2-level broken GBL/LBL hierarchical structure for a HiNAND2 array to perform preferred Multiple-WL and All-GBL simultaneous operations. Like HiNAND1 array, the HiNAND2 array includes of similar J NAND Groups in series, extending from array top to bottom in BL or Y-direction, connected by one broken Group metal2 GBL line associated with a parasitic capacitor C_{GBL}. Note, the length of each broken Group metal2 GBL line extending one HiNAND2 Group without being further broken like the HiNAND1 Group mentioned before is the longest metal2 line for charge-sharing simultaneous Multiple-WL Read operation of HiNAND2 array. But each broken Group metal2 GBL line at top level is further connected in parallel to L metal1 LBL lines located at bottom level. Each metal1 LBL line is associated with one Segment in one Group of the HiNAND2 array. Each Group includes L Segments. Thus, the length of each metal1 LBL line is about 1/L of each broken Group metal2 GBL line. Alternatively, each metal1 LBL line can be further divided to n metal1 broken-LBL lines, each of them can be the shortest metal1 line for simultaneous Multiple-WL Program operation of the HiNAND2 array. In other words, each Segment is divided into n sub-Segments and each sub-Segment includes K identical NAND Blocks extended in Y-direction. Each Block is further comprised of N identical NAND Strings cascaded in WL or X-direction. Each NAND String includes M NMOS NAND cells in series with one top String-select transistor MS and one bottom String-select transistor MG. J, L, n, K, M, and N are integers. Preferably, J=8 or 16, L=4, n≥4, K depends on memory density, M=64, and N=65,536 for 8 KB page. Again, each physical NAND cell, a 2D cell in this embodiment, can also similarly store 2-state SLC, 4-state MLC, 8-state TLC or 16-state XLC or even 256-state analog values.

The third objective is to propose a NMOS 1-poly MHV transistor MGBL, same type as typical NAND String-select transistors MS and MG, for dividing a large metal1 GBL line for the HiNAND1 array to J broken Group metal1 lines and similarly a NMOS 1-poly MHV transistor MDBLp for further dividing each broken Group metal1 lines to L smaller broken Segment metal1 lines. Alternatively, for the HiNAND2 array with 2-level BL hierarchical structure, it is to propose a similar MGBL transistor for dividing a large metal2 GBL line to J metal2 broken-GBL lines (capacitors) respectively associated to J Groups. Each metal2 broken-GBL line in a Group located at a top level is connected via L MLBLp transistors respectively to L smaller metal1 LBL lines located at bottom level and respectively extended over one of L Segments within the Group. It is proposed to have n−1 MDBLp transistors, similar to those used in HiNAND1 array, for dividing each smaller metal1 LBL line (or capacitor) of a Segment to n broken-LBL metal1 lines respectively associated with n sub-Segments Blocks. Each sub-Segment contains K Blocks, where J, L, K, n can be any integer number and J is preferred to be 8 and 16. As a result, this preferred 2-level broken-BL HiNAND2 array, regardless of 2D or 3D configuration, is comprised of J Groups with J×L Segments and J×L×n×K Blocks in Y-direction. Again, each Block is further comprised of N identical NAND Strings cascaded in WL or X-direction. Additionally, one or more metal0 power lines GBLps and Vss lines CSL are laid out in X-direction for the HiNAND1 array and several power lines LBLps and Vss lines CSL are also laid out in X-direction for the HiNAND2 array.

The fourth objective of present invention is to propose that one end of each metal1 broken GBL line (capacitor) of HiNAND1 array is preferably connected to one corresponding horizontal metal0 power line, GBLps, through a 1-poly NMOS MLBLs transistor (same type of transistor like MS and MG transistors). In other words, one metal0 GBLps line is associated with one Segment per each Group in the HiNAND1 array. Each common metal0 GBLps line has two purposes. The first purpose is used as a power supply line for the HiNAND1 array in initial precharge operation on all selected broken Group/Segment metal1 lines to charge the corresponding broken GBL capacitors up to $V_{inhibit}$ voltage during Multiple-WL and All-BL operations. In contrast, the second purpose is used as a Vss line to discharge each selected Segment and Group lines or capacitors.

The fifth objective of present invention is to propose that one end of each bottom-level metal1 LBL line (or capacitor) of a Segment in the HiNAND2 array is preferably connected to one corresponding common metal0 power line, LBLps, per Segment through a NMOS 1-poly transistor MLBLs (like String-select transistors MS and MG). The other end of each bottom-level metal1 LBL line of the Segment is preferably connected to one top-level metal2 broken GBL line through a MHV NMOS transistor MLBLp. All the smaller metal1 LBL lines associated with L Segments in the Group are connected in parallel to each corresponding larger

metal2 broken GBL line (or capacitor). The metal1 LBL line of the Segment can be further divided into n broken-LBL metal1 lines by n−1 transistors MDBLp, each metal1 broken-LBL line belonging to a sub-Segment associated with a broken-LBL capacitor. One metal0 line LBLps connects commonly to each broken-LBL metal1 line respectively via a transistor MLBLs in the HiNAND2 array. Firstly, the LBLps line is used as a power supply line for the HiNAND2 array in initial precharge operation to charge all selected metal1 broken-LBL lines up to $V_{inhibit}$ voltage at the LBL capacitors during the Multiple-WL and All-BL operations. Secondly, the LBLps line is used as the Vss line to discharge each selected broken Segment and Group lines (or capacitors).

The sixth objective of present invention is to propose that each top-level metal2 broken-GBL line in HiNAND2 or broken Group metal1 line in HiNAND1 array is a N-bit BL flexibly connected to either 1-sided N-bit Page Buffer (PB) circuit or 2-sided N-bit PB circuit for an evenly power-saving distribution and faster speed performance for the preferred Multiple-WL and All-GBL simultaneous operations.

In an embodiment, the bit number of the PB can be made same as N-bit GBLs in one physical WL. In this scheme, the one physical N-bit page data trapped in the corresponding broken Group N-bit GBL capacitor or broken Segment N-bit LBL capacitor from a N-bit PB just needs 1-cycle of 1-page loading either from the top-side PB or the bottom-side PB of the HiNAND array.

In another embodiment, the bit number of either 2-sided or 1-sided PB can be made of N/2-bits, which is only one-half of N-bit of GBLs in one physical WL. In this scheme, the whole one physical N-bit WL's data trapped in the corresponding broken Group N-bit GBL capacitors from a N/2-bit PB needs 2-cycle of half-page data loadings so that whole Multiple Full-WL, All-BL Program and Erase can still be performed either from the top-side PB or the bottom-side PB.

The seventh objective of present invention is to propose that each top-level metal2 N-bit broken-GBL lines (capacitors) in a HiNAND2 array and the metal1 broken-GBL lines (capacitors) in a HiNAND1 array is preferably divided into two equal halves with a N-bit PB preferably being placed in the middle of either the HiNAND2 or the HiNAND1 array with two sets of N-bit outputs. The first set of N-bit outputs connect upward to the first N-bit GBL of top half of the HiNAND2 array and the second set of N-bit outputs connect downward to the second N-Bit GBL of bottom half of the HiNAND2 array. In this scheme both top and bottom half of HiNAND2 arrays can be performed the Multiple Whole-WL and All-BL Program, Program-Verify, and Read operation simultaneously in 1-cycle.

The eighth objective of the present invention is to propose a preferred method to determine an optimal number J of all broken GBL lines or capacitors per column of a HiNAND1 array. The optimal number of J is mainly determined by the latency and reliable charge-sharing operations of Read and Program-Verify operations rather than by Program operation.

For a Multiple-WL and All-GBL Read and Program-Verify operations, the number of broken GBLs is determined by a preferred ratio R(HiNAND) of the farthest, relative to a 1-sided N-bit PB, Jth broken GBL capacitance to the sum of total J GBL capacitances when all the J−1 divided transistors MGBLs are turned on the same time to allow the N-bit sensed All-GBL data voltages to pass from the Jth GBL capacitor to the N-bit PB through J−1 GBL capacitors for N-bit data simultaneous evaluation. The preferred ratio R(HiNAND) equals to $1\times C_{GBL}/J\times C_{GBL}=1/J$, where $10\leq J\leq 20$. The value of J below 10 is better for charge-sharing DRAM-like SA but at the expense of larger overhead with increasing number of MGBL transistors. Note, R(HiNAND)=R(DRAM), which is defined as a ratio of each DRAM cell capacitance to each DRAM BL capacitance and typically less than 1/20. Regardless of the HiNAND2 and HiNAND1 arrays, the preferred values of J are J=8 or 16.

The ninth objective of the present invention is to propose a preferred method to determine an optimal number L of all metal1 LBL lines (or capacitors) per HiNAND2 Group. The optimal number L is determined by the power-consumption of the preferred Program-Inhibit scheme by precharging a $V_{inhibit}$ voltage on the selected N-bit metal1 LBL capacitors within the selected Segments of a Group in the HiNAND2 array for less power consumption in Read and Program-Verify operations. In a specific embodiment, the preferred value of L is determined by an equation J/L=4 per four Segments for each metal2 broken-GBL line or capacitor for a preferred Multiple Whole-WL and All-GBL Read and Verify operations. In other words, each top level metal2 broken-GBL line of a Group is connected in parallel to four bottom-level metal1 LBL lines associated with 4 Segments. Each metal1 LBL line of a Segment is preferably divided into n≥4 metal1 broken LBL lines respectively associated with n sets of K Blocks for precharging to $V_{inhibit}$ voltage on the selected smaller N-bit metal1 broken-LBL capacitors within the selected Segments of a Group in the HiNAND2 array for less Program power consumption. Each Block includes N identical NAND Strings cascaded in WL or X-direction. The preferred length of each metal1 broken LBL line is the length of K 2D HiNAND cell Strings in Y-direction (where n typically is 4 and K is any integer depended on area density of the flash memory chip).

The 10th objective of the present invention is to propose a preferred n bottom-level broken-LBL metal1 lines per each NAND Segment, each broken-LBL metal1 line being associated with a parasitic line capacitor, C_{LBL}. There are two preferred ways to form this broken-LBL metal1 line. In a first embodiment, each Group associated with a broken-GBL metal2 line overlaps with L Segments and each Segment includes L smaller LBL metal1 lines in the HiNAND2 array. Each Segment is divided into n sub-Segment. In other words, the total number, m, of broken-LBL metal1 lines per GBL column (Y-direction) per Group is m=L×n, where each sub-Segment has a broken-LBL metal1 line. Each broken-LBL metal1 line connects in parallel to K HiNAND Strings in Y-direction. Note, the HiNAND String is the same as conventional NAND String in terms of String length in this application. But only one top C_{LBL} capacitor of the n broken-LBL metal1 lines or capacitors per Segment is preferably connected to the top-level metal2 broken-GBL line through a MHV 1-poly NMOS transistor MLBLp with its gate being tied to a control signal, such as SEG_1[1], . . . , or SEG_1[L], in each selected Group J, respectively. In addition, only one bottom C_{LBL} capacitor of the n broken-LBL metal1 lines per Segment is preferably connected to a bottom metal0 line LBLps_1[L] laid in X-direction through a MHV 1-poly NMOS transistor MLBLs with its gate being tied to one signal, such as PRE_1_n[1], . . . , or PRE_1_n[1:L], in each selected Group J, respectively. In an alternative embodiment, the number of LBLps lines can be increased n times to have one LBLps line per K Blocks.

The 11 th objective is to use a NMOS MHV voltage device as the one used as String-select transistor MS (or MG) in conventional NAND for each of MDBLp and

MLBLs transistors for forming broken GBLs or broken LBLs in the preferred HiNAND1 and HiNAND2 arrays of the present invention. Other HV device meeting BVDS spec higher than MHV MS and MG can also be used.

The 12th objective is to have a flexibility to divide each broken-GBL or broken-LBL lines in equal and unequal lengths and capacitances in all 2D and 3D HiNAND arrays. In an embodiment, the length of those farthest GBL or LBL lines (or capacitors) relative to a page buffer (PB) at one end of the HiNAND array are preferably made much larger than those in a Group nearest to the PB for a less dilution of charge-sharing voltages for superior DRAM-like sensing scheme used in the HiNAND array. For example, the length of farthest Segment or Group BL line can be made 4× longer than the nearest Segment BL line in each Group or nearest Group BL line relative to the PB.

The 13th objective of the present invention is to differentiate J Groups with different Read latencies and power-consumption in an one-sided N-bit or N/2-bit PB of the HiNAND2 and HiNAND1 array. Because the Group 1 is the nearest Group to the top-sided PB, it is a HiNAND Group with the fastest operation and the least power-consumption. The Group J is farthest Group from the top-sided PB, thus it is termed as a HiNAND Group with the slowest operation and the highest power-consumption. For example, for reading Operation System code programs, it requires least Read latency upon power-up cycle so that its data are preferred to be stored in the Group 1.

The 14th objective of the present invention is to differentiate J Groups with different Read latencies and power-consumption in a 2-sided N-bit or N/2-bit PB HiNAND2 and HiNAND1 array. The Group 1 and Group J are nearest to the top PB and bottom PB respectively, thus both Group 1 and Group J are termed as the fastest NAND Group with the least power-consumption. The middle Group(s), Group J/2 and Group J/2+1, are the farthest Groups from both top and bottom PBs, thus they are termed as the slowest NAND Groups with the highest power-consumption. For example, for reading Operation System code programs, it requires least Read latency upon power-up cycle so that its data are preferred to be stored in the Group 1 and Group J.

The 15th objective of the present invention is to precharge and discharge each selected metal2 broken-GBL line and each corresponding metal1 broken-LBL line through the one pair of transistors MLBLp and MLBLs so that no extra power-line like LBLps_J is required for each metal2 broken GBL capacitor in HiNAND2 array to save layout area. For fully passing the $V_{inhibit}$ voltage from a selected metal0 line LBLps to each metal1 LBL capacitor, the gate voltages of MLBLs transistors, PRE_1_1[1]==PRE_1_1~n[L], are applied with $V_{inhibit}+Vt+V_{margin}$, where $V_{margin}\geq 0.5V$ and control signal SEG_1[1] is applied with Vss to disconnect each metal2 broken GBL line from the corresponding metal1 broken LBL line.

The 16th objective of the present invention is to disclose a preferred Read, Program, and Program-Inhibit schemes for HiNAND array to save power consumption and to perform faster Multiple-WL and All-BL simultaneous Program operation. This simultaneous Multiple-WL and All-BL Program operation can be successfully implemented by precharging all selected N-bit metal1 broken LBL lines first with a $V_{inhibit}$ voltage (up to about 7V) from only one selected metal0 LBLps line and then discharging part of the N-bit metal1 broken LBL lines selectively based on the data "zero" sent by the PB from selected metal2 broken GBL lines through the corresponding MLBLp transistors. The precharged $V_{inhibit}$ voltage would be retained in the remaining part of the N-bit LBL lines if the corresponding data from the PB are "one."

After the completion of discharge/non-discharge operation of first N-bit metal1 LBL capacitors of a first page data, the Program and Program-Inhibit page data is then locked therein. The Multiple-WL Program and Program-Inhibit data would be repeatedly locked in or trapped in the remaining selected N-bit metal1 LBL capacitors. Once all the selected WL Program and Program-Inhibit data being successfully stored in the corresponding pages of N-bit metal1 BL capacitors, then a set of Vpgm (15V to 25V) and Vpass (10V) for one selected and 63 non-selected WLs per String would be applied to all selected Blocks for simultaneous Multiple-WL Program (assuming each Block comprising of 64 NAND cells connected in series with two String-select transistors of MS and MG).

The 17th objective of the present invention is to disclose a preferred Multiple Whole-WL and All-BL simultaneous Read operation. This simultaneous Read operation can be successfully implemented by precharging all the selected N-bit metal1 LBL capacitors in HiNAND2 array first with a $V_{inhibit}$ voltage of Vdd reversely from only one selected LBLps line through a MLBLs transistor to each selected N-bit LBL line, and then through the divided transistor MDBLp (turned on) along the path of metal1 LBL line to reach the broken LBL capacitor and then through the corresponding NMOS MHV MLBLp transistor to the selected metal2 broken-GBL capacitor. Thus the conventional N-bit all-GBL precharged Vdd voltages are not from the N-bit PB through the long and heavy unbroken metal2 GBL line. Instead, the Read precharged voltage is directly coupled from only one selected metal0 power line LBLps in X-direction to the N-bit smaller metal1 LBL lines (capacitors) for achieving dramatic power reduction.

Afterwards, the precharged $V_{inhibit}$=Vdd on the N-bit metal1 LBL capacitors will be selectively discharged to 0V by the stored "1" data in the multiple selected WLs in the multiple selected Blocks in the multiple selected Segments of one or more selected Groups.

This simultaneous Multiple whole-WL and All-GBL Read operation can be started after the completion of trappings of $V_{inhibit}$ voltage on all multiple selected metal1 LBL lines (capacitors). The final non-discharged $V_{inhibit}$ voltage in all N-bit LBL capacitors in multiple Blocks would be dumped to the corresponding broken GBL capacitors in a predefined order for a DRAM-like charge-sharing Read scheme. A preferred charge-sharing Sense Amplifier (SA) operation can be done with an analog voltage reduced from the $V_{inhibit}$ voltage which is then amplified by a Multiplier and sent to DRAM latch-type SA for final N-bit data simultaneous evaluation. The preferred order of charge-sharing operation and SA data evaluation for each broken GBL capacitor is started from the top Group 1 which is the nearest to the PB. After the Group 1 is read into the PB, the broken-GBL capacitor voltage in Group 1 has to be reset to Vss and ready for the next GBL charges from Group 2 with the voltage diluted by half before being fed to the Multiplier. Accordingly, the Jth GBL capacitor's $V_{inhibit}$ voltage would be dumped into the longest GBL line with 1/16 $V_{inhibit}$ dilution before fed to the Multiplier and then SA for final data evaluation.

The 18th objective of the present invention is to disclose two preferred sets of the 64-WL biased Program and Program-Inhibit (PI) voltages along with the preferred $V_{inhibit}$ voltages on each LBL capacitor for a HiNAND array that is comprised of a plurality of 64-cell NAND Strings in each

NAND Block. These two preferred PI schemes includes a) using SBPI scheme with $V_{inhibit}$=Vdd and $V_{program}$=Vss for the HiNAND Program operation, and b) using non-SBPI scheme with $V_{inhibit}$>Vdd and $V_{program}$=Vss for the HiNAND Program operation. Note: SBPI stands for Self-Boosting-Program-Inhibit.

The 19th objective of the present invention is to disclose a preferred Dispersed Block architecture for the 2D HiNAND array as oppose to the conventional Consolidated Block scheme for 2D NAND. In this preferred Dispersed 2D HiNAND Block, one or more dispersed WLs of K WLs can be flexibly selected for simultaneous Erase operation with the same Erase conditions such as TPW=20V, with the selected V_{WL}=0V and V_{SSL}=V_{GSL} at floating to reduce the selected cells' Vt=Vte≤−0.7V. A preferred set of Erase biased conditions for this HiNAND array such as SSL and GSL lines and SEG lines, PRE lines, DI lines and DIV_EN lines will be shown. The values of K=16, 32, 64, 128 or any integer number. In an embodiment, the Erase operation of the 2D HiNAND flash cell uses a FN-channel tunneling scheme.

The 20th objective of the present invention is to disclose a preferred Dispersed Block architecture for a 3D HiNAND array as oppose to the conventional Consolidated Block scheme for 3D NAND. In this preferred Dispersed 3D HiNAND Block, similarly, one or more dispersed WLs of K WLs can be flexibly selected for simultaneous Erase operation with the same Erase conditions to reduce the selected cells' Vt=Vte≤−0.7V. The values of K=16, 32, 64 or any integer number. But the Erase operation of the 3D HiNAND flash cell uses preferred GIDL hot-hole injection scheme to raise the 3D flash cell channel's polysilicon bulk potential against 0V WL voltage to tunnel the stored electrons in a 3D flash cell charge-trapping layer for its Vt reduction.

The 21th objective of the present invention is to disclose a preferred set of biased voltage conditions for multiple selected WLs, the multiple remaining unselected WLs, and the multiple selected and unselected SSL and GSL lines and SEG lines, PRE lines, DI lines and DIV_EN lines for this Multiple Whole-WL and All-GBL simultaneous Erase-Verify operation of the preferred HiNAND array.

The 22th objective of the present invention is to disclose two preferred Erase schemes that will be used in 3D HiNAND array. The first Erase scheme is like the traditional 2D NAND that applies 20V in NAND's bulk TPW to perform reverse FN-channel Erase to remove the electrons in the floating-gate to reduce the NAND's Vt. The second Erase scheme is to use either top or bottom or both 3D select transistors in a 3D HiNAND String in the 3D HiNAND array to generate a high GILD hole current to increase the selected flash bulk voltage to a level such as V_{erase}=20V to remove electrons in the charge-trapping layer.

The 23th objective of the present invention is to disclose both above preferred Erase schemes plus the preferred decoding circuits, one WL or more than one WL or whole WLs Erase and Erase-Verify operations can be flexibly and simultaneously performed in both Consolidated and Dispersed Blocks of 2D and 3D HiNAND arrays.

The 24th objective of the present invention is to disclose a preferred new Block decoder with an additional Latch circuit to have the flexible Set and Reset functions to allow independently and randomly selecting one or more Block decoders for the preferred Multiple-WL and All-GBL simultaneous operations for both 2D and 3D HiNAND arrays.

The 25th objective of the present invention is to disclose a preferred new circuit of Broken GBL and LBL decoders to allow independently and randomly selecting one or more rows of the broken-GBL transistor MGBL and the broken-LBL transistor MDBLp. In order to have a full passage of voltages up to 7V in GBL and LBL, the GBL and LBL drives need to output a HV on the control signals of DIV-EN and DI_1.

The 26th objective of the present invention is to disclose a preferred new circuit of LBLps line to supply the following voltages to metal1 LBL capacitor: a) LBLps=$V_{inhibit}$ for LBL's Program-Inhibit voltage, where Vdd≤$V_{inhibit}$≤7V; b) LBLps=$V_{inhibit}$ for LBL's Read, Erase-Verify, and Program-Verify precharged voltage, where $V_{inhibit}$=Vdd; c) LBLps=Vss for discharging the LBL capacitors or the corresponding GBL capacitors.

The 27th objective of the present invention is to disclose a preferred set of voltages for one selected WL and multiple unselected WLs along with a preferred set of Vss and $V_{inhibit}$ for all BLs in the selected Blocks so that a random multiple-WL and All-BL simultaneous Program and Program-Verify operations can be achieved for both HiNAND1 and HiNAND2 arrays.

The 28th objective of the present invention is to disclose a flow scheme and circuit for performing a preferred Multiple Whole-WL and All-GBL simultaneous Read operation. The operation requires only one N-bit Cache PB for a N-bit SLC Read, two N-bit Cache PB for a 2×N-bit MLC Read, three N-bit Cache PB for a 3×N-bit TLC Read, and four N-bit Cache PB for a 4×N-bit XLC Read by using a new scheme of "Recall" along with the one or more levels broken-BL hierarchical structure that inherently has many existing pages of available N-bit LBL capacitors to temporarily store K×N-bit page-data (regardless of SLC, MLC, TLC and XLC) of multiple selected WLs without overheads of the extra data registers.

The 29th objective of the present invention is to disclose a technique to use existing free multiple N-bit pages of Sample-and-Hold (S&H) LBL capacitors as Dynamic Cache to temporarily store the multiple-WL page data (in Segments of a Group) near the N-bit PB, rather than to store in multiple pages of real Cache Registers as used in conventional NAND, to save silicon area. The total numbers of rows or pages of N-bit S&H circuit depend on types of storages data. Typically one row of N-bit S&H LBL capacitors for N-bit SLC storage data, while two rows of N-bit S&H circuit for N-bit MLC storage data, three rows of N-bit S&H circuit for N-bit TLC storage data and lastly four rows of N-bit S&H circuit is for N-bit XLC storage data.

The 30th objective of the present invention is to disclose a preferred Rotation capacitor assignment with n rotation Dynamic Cache Registers and one Dynamic PB per multiple-state storage data in the HiNAND array. The value of n is subject to the NAND storage type. For example, for SLC, n=1, MLC, n=2, TLC, n=3 and XLC n=4. One N-bit Dynamic Cache Register is to store N-bit one-WL Program pattern, while one N-bit Dynamic PB is to store one-WL N-bit Program and Program-Inhibit pattern. The Rotation capacitor assignment is based on one Group size of n+1 N-bit LBL capacitors or n+1 WLs for one Dynamic PB and n Dynamic Cache Registers in the HiNAND array. During the progression of Multiple-WL Program, the selected WL is shifted or rotated from first WL to the final WL. Thus the only one Dynamic PB for each selected WL has to be shifted inside n+1 WLs. The details will be explained in accordance with FIG. **4**A and FIG. **4**B of this application.

The 31th objective of the present invention is to disclose a novel Recall function, which is defined as a DRAM-like page-based Read operation to allow the sensing of 1-page program voltage data stored in one designated page of

Dynamic Cache Register by a PB located at top or bottom of the HiNAND array during this preferred Program-Verify operation. The Recall operation is performed directly to read the N stored voltages in accordance with the program page data loaded from I/O, as oppose to the program-verify that reads cell's stored analog Vt from the selected WLs. The required number of Dynamic Cache Registers for this broken-BL hierarchical HiNAND array is determined by the storage types. For SLC, only 1 Dynamic Cache Register is required, while for MLC, 2 Dynamic Cache Registers are required, TLC needs 3 Dynamic Cache Registers and XLC needs 4 Dynamic Cache Registers.

This preferred Recall operation is performed through using a first step of a DRAM-like Charge-sharing (CS) Read between one accessed C_{SEG} with up to $J \times C_{GBL}$ (assuming the array is divided into J broken Groups), then performing a second step of a Multiplier's analog voltage amplification and lastly a third step of a Latch-type SA's full digital amplification to recall the previously stored 1-page program data back to Static-PB in one read cycle of the present invention.

For a proper Read of two distinct diluted voltage data pattern such as, Vdd/J vs 0V or $V_{inhibit}$/J vs. 0V after CS, the ratio of 1/J value is preferred set to be not smaller 1/16 as adopted by a DRAM Read.

The 32th objective of the present invention is to disclose several preferred PI (Program-Inhibit) schemes for this HiNAND array, regardless of 2D or 3D technologies. The key difference between HiNAND Program and NAND Program is that each N-bit Page data of $V_{inhibit}$ and Vss of each WL data are not directly controlled remotely by the N-bit PB through each long GBL as in conventional NAND dealing with one WL Program only, instead, in the HiNAND with Multiple whole-WL and All-GBL Program scheme, the multiple page data in $V_{inhibit}$/Vss patterns of the selected multiple WLs are allowed to be latched or stored in multiple steps in selected metal1 LBL capacitors in the selected Segments and Groups. Thus the simultaneous multiple whole-WL and All-BL Program operation becomes feasible without causing any data contention in the shared N-bit PB.

The 33th objective of the present invention is to disclose several preferred PI (Program-Inhibit) schemes for this HiNAND array, regardless of 2D or 3D technologies. The key differences between HiNAND Program and NAND Program are summarized below:

a) $V_{inhibit}$ voltage≥7V is a much higher initial voltage in selected HiNAND cell's channel voltage V_{chl} than Vdd used in the conventional NAND cell supplied from a N-bit PB.
b) Vpass=10V to obtain the highest V_{chl} before Program is initiated.
c) Multiple randomly WLs are selected for concurrent Program from multiple dispersed Blocks on a basis of one-WL per one Block, each of the multiple dispersed Blocks belonging to different sub-Segment associated with a broken-LBL capacitor, each sub-Segment being selected randomly to same or different Segments of the same or different Groups.

This is termed as Multiple random-WL Program in the Dispersed NAND Blocks. A higher PI's $V_{inhibit}$ voltage is used by HiNAND array in the beginning of the page Program.

The 34th objective of the present invention discloses that all the above mentioned objectives, techniques, broken-BL hierarchical structures in 2D HiNAND flash array can be similarly applied in various 3D NAND arrays and technologies for the preferred Multiple-WL and All-GBL simultaneous Program, Read, Erase-Verify, and Program-Verify operations. The conventional 3D NAND technologies include 1) The vertical-channel 3D NAND technologies from Toshiba's BiCS and PiCS Vertical-channel NAND, Samsung's TCAT, and Hynix's DC-SF; 2) The vertical-gate 3D NAND technology from Samsung, Macronix, etc. In 2D HiNAND architecture, the optimal length of capacitance of each broken metal1 LBL line is optimally set around four 2D HiNAND Strings for the tradeoff between the overhead of added MLBLps MHV devices and PI precharge-current. But in 3D HiNAND flash architecture, the length of each LBL line of four or more 3D NAND Strings takes less area, thus less capacitance. As a result, it should be increased to more than 8 Strings to increase corresponding 3D broken LBL capacitance. Similarly, each broken GBL capacitance is reduced due to the 3D HiNAND Strings takes less area.

The 35th objective of the present invention is to disclose all above proposed 2-level broken BL HiNAND2 array can be reduced to 1-level broken BL HiNAND1 array only with metal1 broken GBL lines for different and high-density memories such as NOR array, SARAM array, DRAM array, PLD array, CAM array, and ROM array. This 1-level divided GBL architecture with segmented DGBL capacitance would result in faster read speed. For those cells read from the selected divided GBL capacitance near SA would have the highest read speed. For those cells located in the other end of column farthest away from SA would have the slowest read speed. The MGBL device used for dividing each long GBL line can be made of LV NMOS device in DRAM, SARAM and CAM and PLD designs with a larger channel width to reduce the pass resistance for not affecting the read BL delay.

4. BRIEF DESCRIPTION OF THE DRAWINGS

FIG. **1**A is a cross-sectional view of a 2D NAND memory cell with channel biased condition at MV=$V_{inhibit}$ for Program-Inhibit (PI) according to an embodiment of the present invention.

FIG. **1**B is a cross-sectional view of a 2D NAND memory cell with channel biased condition at Vss=0V for Program according to an embodiment of the present invention.

FIG. **1**C is a diagram of 3-bit 8-Vt distribution of TLC-type storage for NAND memory cell according to an embodiment of the present invention.

FIG. **1**D is a cross-sectional view of a memory unit device configuration of a conventional U-shape vertical-channel 3D memory String that comprises eight 3D NAND cells.

FIG. **1**E shows respective side cross-sectional view and top cross-sectional view of two optional device configurations of an alternative conventional vertical-channel 3D NAND memory String.

FIG. **2**A is a circuit diagram of a 2D HiNAND1 array including 1-level hierarchical broken-GBL structure for multiple-WL and All-GBL simultaneous Erase, Erase-verify, Program, Program-Verify, and Read operations according to a specific embodiment of the present invention.

FIG. **2**B is a circuit diagram of a 2D HiNAND2 array including 2-level broken-BL hierarchical structure for multiple-WL and All-GBL simultaneous Erase, Erase-Verify, Program, Program-Verify, and Read operations according to another specific embodiment of the present invention.

FIG. **3** is a block diagram of a Page Buffer circuit for both the HiNAND2 and HiNAND1 arrays according to embodiments of the present invention.

FIG. **4**A is a simplified circuit diagram of a HiNAND2 array of FIG. **2**B performing Sample & Hold functions of a

Multiple-WL TLC Program operation according to a specific embodiment of the present invention. The HiNAND array has been divided into 8 Groups. Each Group large metal2 GBL capacitor (or GBL line) is divided into 8 Clusters of 4-Segment metal1 capacitors through 8 divided GBL transistor of MLBLp. Each Group-broken metal2 line has eight 4-Segment metal1 capacitors connected in parallel. Each 4-Segment cluster includes one Segment being assigned to be one Dynamic Page Buffer (PB) and three Segments being assigned to be Dynamic Cache Registers. The assignments are preferably rotated among these 4 Segments. FIG. **4**A shows that the first Segment of Cluster **1** in the dispersed eight Groups is assigned to be one Dynamic PB but the next three Segments are assigned to be three corresponding Dynamic Cache Registers for storing one corresponding 3-bit TLC data.

FIG. **4**B is a simplified circuit diagram of a HiNAND2 array of FIG. **2**B performing Sample & Hold functions of a Multiple-WL TLC Program operation according to another specific embodiment of the present invention. The assignment of 4-Segment metal1 capacitors are rotated with the last Segment of Cluster **8** in the dispersed eight Groups being assigned to one Dynamic PB and the first three Segments being assigned to be three corresponding Dynamic Cache Registers for storing another one corresponding 3-TLC data.

FIG. **4**C is a simplified circuit diagram of a HiNAND2 array of FIG. **2**B performing Sample & Hold functions of a Multiple-WL TLC Program operation according to another specific embodiment of the present invention. The assignment of 4-Segment metal1 capacitors are rotated with the first Segment of all eight Clusters in Group 1 being assigned to one Dynamic PB and the next three Segments in each Cluster being assigned to be three corresponding Dynamic Cache Registers for storing another one corresponding 3-TLC data.

FIG. **4**D is a simplified circuit diagram of a HiNAND2 array of FIG. **2**B performing Sample & Hold functions of a Multiple-WL TLC Program operation according to another specific embodiment of the present invention. The assignment of 4-Segment metal1 capacitors are rotated with the first Segment of all eight Clusters in Group 8 being assigned to one Dynamic PB and the next three Segments in each Cluster being assigned to be three corresponding Dynamic Cache Registers for storing another one corresponding 3-TLC data.

FIG. **5**A is a circuit diagram of 1-bit static PB circuit that comprises one Multiplier circuit, one 1-bit Sense Amplifier circuit and one 1-bit SLC Data Register, along with one Y-pass circuit, One Cache Register, one I/O Control and multiple I/O [1:X] pins for Multiple-WL and All-GBL Simultaneous SLC operations for both HiNAND1 and HiNAND2 arrays according to an embodiment of the present invention.

FIG. **5**B is a circuit diagram of multi-bit static PB circuit for HiNAND array that allows to store e-bit NAND multiple-state page data for Multiple-WL and All-BL Simultaneous (MLC, TLC, XLC, . . .) operations according to an embodiment of the present invention.

FIG. **6**A is a diagram showing a set of SLC Read timing waveforms for Multiple-WL and All-GBL simultaneous Read operation with a preferred set of initial biased conditions in accordance with the 1-bit static PB circuit shown in FIG. **5**A of both HiNAND1 and HiNAND2 arrays according to an embodiment of the present invention.

FIG. **6**B is a diagram showing a set of Sample/Hold Multiple-WL SLC PGM patterns timing waveforms in accordance with the 1-bit static PB circuit shown in FIG. **5**A of both HiNAND1 and HiNAND2 arrays according to an embodiment of the present invention.

FIG. **6**C is a diagram showing a set of set biased conditions of Multiple-WL and All-GBL SLC simultaneous PGM timing waveforms in accordance with the 1-bit static PB circuit shown in FIG. **5**A.

FIG. **6**D is a flow chart showing a method for the preferred Multiple-WL and All-GBL SLC simultaneous Program operation in accordance with the preferred PB circuit shown in FIG. **5**A.

FIG. **7**A is a diagram showing a set of MLC Read timing waveforms for performing the preferred Multiple-WL and All-GBL MLC simultaneous Read operation in accordance with the multi-bit static PB circuit shown in FIG. **5**B of both HiNAND1 and HiNAND2 arrays according to an embodiment of the present invention.

FIG. **7**B is a diagram showing a set of Sample/Hold Multiple-WL PGM patterns timing waveforms for the preferred Multiple-WL and All-GBL MLC simultaneous Program Patterns operation in accordance with the multi-bit static PB circuit shown in FIG. **5**B.

FIG. **7**C is a diagram showing a set of biased conditions of Multiple-WL and All-GBL MLC simultaneous PGM timing waveforms in accordance with the preferred PB circuit shown in FIG. **5**B.

FIG. **7**D is a flow chart showing a method for the preferred Multiple-WL and All-GBL MLC simultaneous Program operation in accordance with the multi-bit static PB circuit shown in FIG. **5**B.

FIG. **8** is a diagram showing a preferred set of bias voltage conditions of array control signals for Multiple-WL & All-GBL simultaneous Read operation based on the HiNAND1 array shown in FIG. **2**A according to a specific embodiment of the present invention.

FIG. **9** is a diagram showing a preferred set of bias voltage conditions of array control signals for Multiple-WL & All-GBL simultaneous Read operation based on the HiNAND2 array shown in FIG. **2**B according to a specific embodiment of the present invention.

FIG. **10** is a diagram showing a first preferred set of bias voltage conditions of array control signals for Multiple-WL & All-GBL simultaneous Program operation based on the HiNAND1 array shown in FIG. **2**A according to a specific embodiment of the present invention.

FIG. **11** is a diagram showing a second preferred set of bias voltage conditions of array control signals for Multiple-WL & All-GBL simultaneous Program operation based on the HiNAND1 array shown in FIG. **2**A according to a specific embodiment of the present invention.

FIG. **12** is a diagram showing a first preferred set of bias voltage conditions of array control signals for Multiple-WL & All-GBL simultaneous Program operation based on the 2D HiNAND2 array shown in FIG. **2**B, regardless of SLC, MLC, TLC and XLC storages, according to another specific embodiment of the present invention.

FIG. **13** is a diagram showing a second preferred set of bias voltage conditions of array control signals for Multiple-WL & All-GBL Simultaneous Program operation based on the 2D HiNAND2 array shown in FIG. **2**B, regardless of SLC, MLC, TLC and XLC storages, according to yet another specific embodiment of the present invention.

FIG. **14** is a diagram showing a preferred set of bias voltage conditions of 2D or 3D HiNAND2 array for a preferred Multiple-WL & All-GBL simultaneous Erase operation using Channel-Erase scheme, regardless of SLC,

MLC, TLC and XLC storages, according to an alternative embodiment of the present invention.

FIG. **15** is a diagram showing a preferred set of bias voltage conditions of 2D or 3D HiNAND2 array for a preferred Multiple-WL & All-GBL simultaneous Erase operation using GIDL Erase scheme, regardless of SLC, MLC, TLC and XLC storages, according to another alternative specific embodiment of the present invention.

FIG. **16** is a simplified circuit diagram showing a 3D HiNAND2 array with 2-transistor divided-GBL/LBL device and U-shaped vertical-channel String according to an embodiment of the present invention.

FIG. **17** is a simplified circuit diagram showing a 3D HiNAND2 array with 3-transistor divided-GBL/LBL device and U-shaped vertical-channel String according to another embodiment of the present invention.

FIG. **18** is a simplified circuit diagram showing a 3D HiNAND2 array with 1-transistor divided-GBL/LBL device and with U-shaped vertical-channel String according to yet another embodiment of the present invention.

FIG. **19** is a simplified circuit diagram showing a 3D HiNAND2 array with 1-transistor divided-GBL/LBL device and with straight vertical-channel String according to still another embodiment of the present invention.

FIG. **20** is a simplified circuit diagram showing a 3D HiNAND2 array compatible with vertical-gate NAND cell string scheme according to a specific embodiment of the present invention.

FIG. **21** is a diagram showing six decoding logics for eight layers of the vertical String selected-transistors of the 3D vertical-gate HiNAND2 array structure of FIG. **20** according to a specific embodiment of the present invention.

The above diagrams are merely examples, which should not unduly limit the scope of the claims herein. One of ordinary skill in the art would recognize many other variations, modifications, and alternatives. It is also understood that the examples and embodiments described herein are for illustrative purposes only and that various modifications or changes in light thereof will be suggested to persons skilled in the art and are to be included within the spirit and purview of this process and scope of the appended claims. Note, all above 3D HiNAND2 arrays have 2-sided Sense Amplifier (SA) and multiple-level hierarchical BL structures. All of them can be turned into 3D HINAND2 with 1-sided SA and multiple-level broken-BL hierarchical structures so that the preferred concurrent charge-sharing, precharge, and discharge in Read and Verify operations can be performed with faster speed and less-power consumption.

5. DETAILED DESCRIPTION OF THE INVENTION

In the following detailed description of the present invention, reference is made towards the accompanying drawings, flow charts, diagrams, and tables that form a part hereof and in which is shown, by way of illustration, specific embodiments in which the invention may be practiced. In the drawings, like numbers describe substantially similar components throughout the several views and embodiments. These embodiments are described in sufficient detail with a goal to enable those skilled in the art to practice the invention. Other embodiments may be made without departing from the scope of the present invention. Additionally, the following detailed description is not to be taken in a limiting sense, and the scope of the present invention is defined only by the appended claims and equivalents thereof. In other instances, well-known structures and devices are shown in block diagram form, rather than in detail, in order to avoid obscuring the present invention.

Please note, if used, the labels left, right, top, bottom, middle, higher or lower level X or Y-direction, column or row direction, horizontal or vertical direction both in drawings or mentioned in description, have been used for convenience purposes only and are not intended to imply any particular fixed direction. Numerical denotation using J, L, K, M, N, m, n, is also for convenience purpose and corresponding examples of these numbers, such as 1, 2, 3, 8, 16, 32, 64, 256, etc are not intended to limit the scope of the present invention defined by the appended claims. Instead, they are used to reflect relative locations and/or directions between various portions of a circuit object or schematic diagram.

Unlike prior-art 2D NAND has only one 1-level unbroken and tight 2λ metal1 global bit line (GBL) architecture extending vertically (or in column direction, or Y-direction) a long way from each array top to bottom with a heavy BL capacitance along with a plurality of horizontal metal0 Vss lines, in general, embodiments of the present invention provide a HiNAND array preferably including 1-level or 2-level hierarchical structure with broken and tight 2λ meal2/metal1 GBLs and tight metal1 local bit lines (LBLs) along with a plurality of horizontal metal0 Vss and power lines. Throughout this specification, a NAND array with 1-level broken metal1 GBL is termed as HiNAND1 array, while a NAND array with 2-level broken metal2 GBL and broken metal1 LBL is termed as HiNAND2 array (compared with the conventional NAND array with 1-level unbroken and tight 2λ metal1 GBL).

The length of each metal2 or same metal1 GBL is formed to be much longer than the length of each metal1 LBL line in HiNAND array so that the DRAM-like Charge-sharing sensing scheme for the preferred Multiple-WL and All-BL Simultaneous operations can be reliably realized with low power consumption and low latency.

For the preferred Multiple-WL and All-GBL simultaneous Program operation, a precharged $V_{inhibit}$ voltage on all selected, smaller, broken metal1 LBLs in HiNAND2 array or a broken metal1 GBL line in HiNAND1 array is required for power saving. The $V_{inhibit}$ voltage is preferably set to be larger than Vdd for HiNAND array and is generated from a $V_{inhibit}$ pump circuit and is then coupled to the selected LBL and GBL capacitors through a selected horizontal metal0 GBLps line in HiNAND1 or metal0 horizontal LBLps line in HiNAND2 array. The precharge current will be too high when the precharged voltage is greater than Vdd and GBL and LBL capacitance are also too large. And that is why a broken smaller LBL or broken GBL line is required for lowering the precharge current for charging to $V_{inhibit}$ in this preferred Multiple-WL and All-GBL simultaneous Program operation based on HiNAND arrays.

Conversely, for the preferred Multiple-WL and All-GBL simultaneous Read and all Verify operations such as Program-Verify or Erase-Verify, a precharged $V_{inhibit}$ voltage or Vdd voltage on all selected large broken metal1 GBL lines in HiNAND1 array or a large broken metal2 GBL line in HiNAND2 array is required for a fast, reliable DRAM-like BL Charge-sharing sensing scheme implemented in this preferred HiNAND array.

Besides multiple-level broken-BL hierarchical structures, some other novel circuits or techniques such as Recall and Sensing, Dynamic Cache Registers and Dynamic PB formed inside 2D HiNAND array to store the programmed data patterns will be disclosed and explained throughout this specification. In addition, all above mentioned multiple-

level broken-BL hierarchical structures, operating schemes and biased conditions for the 2D HiNAND array circuits can be extended into the 3D HiNAND array circuits with a super fast, lower-power Program and Read operations.

FIG. **1**A shows a cross-sectional view of one 2-poly, NMOS, 2D NAND cell subjected to a preferred non-SBPI's program-inhibit bias condition according to an embodiment of the present invention. As shown, the cell, referred as the 2-poly HiNAND cell in this invention, is formed inside the TPW **27**, within the DNW **28** on top of P-substrate **29**, structurally the same as conventional NAND cell. In an alternative embodiment, the 2D HiNAND cell can also be a 1-poly MONOS cell using a charge-trapping layer made from Nitride for data storage. In another alternative embodiment, this HiNAND cell can be made of either 2-poly floating-gate transistor with poly1 layer **20** on top of poly2 layer **22** separated by a thin oxide layer **21**. Poly2 layer is separated from the channel by another thin oxide layer **23** in between. Further, the cell can also be made of a 1-poly charge-trapping layer NMOS transistor (not shown).

FIG. **1**A shows that the 2-poly HiNAND cell is subjected to a biased (charged) voltage of MV in both drain node **26** and source node **24** for Program-Inhibit. In particular, the gate **19** is applied with word line Vpgm voltage a while the MV at cell channel is at program-inhibit $V_{inhibit}$ voltage which is greater than Vdd, for example $V_{inhibit}$=7V. One advantage of adopting HiNAND broken-BL hierarchical structure is to allow the easiest setup of a low-power, least WL-pass disturbance, using multiple schemes for Program and Program-Inhibit operations including the enhanced SBPI (ESBPI) and direct non-SBPI as well as the conventional SBPI scheme to achieve high-yield and superior programming of 2D and 3D NAND flash memory.

Conventionally, more than 7V is generated in channels of the non-selected NAND cells through the coupling effect of rising WL-gate 20V with an initial floating Vdd-Vt voltage, which is about 1V when Vdd=1.8V. But when adopting HiNAND architecture, this 7V or greater can be generated directly from a $V_{inhibit}$ pump circuit and then directly coupled to the channels of unselected programmed NAND cells in multiple selected WLs and pages simultaneously by using the preferred low-power non-SBPI scheme as disclosed in the present invention. With $V_{inhibit}$ voltage being directly supplied to the channels of non-selected NAND cells, thus this non-SBPI $V_{inhibit}$ method is very effective with high Program and Program-Inhibit (PI) yield.

In an embodiment, a low-power ESBPI scheme is adopted to use a bias voltage more than Vdd but preferably below $V_{inhibit}$ of 7V. Since ESBPI uses $V_{inhibit}$ higher than Vdd as used by conventional NAND, thus, the PI yield should be much higher and more reliable. Again using the ESBPI method, the bias voltage is also preferably generated from a pump on chip that is not coupled from the PB on top of NAND array. Thus the HiNAND architecture based on these HiNAND cells can still use the low-voltage PB as prior-art NAND design. Since the charged bias voltage is less than 7V, thus coupling effect similar to SBPI is still required.

Besides above two preferred PI methods, the third SBPI scheme using Vdd as program-inhibit voltage like the prior-art NAND can still be used for the present 2D HiNAND architecture for Multiple-WL and All-GBL simultaneous Program operation. Note, all above three methods, the SB effect to increase non-selected NAND cell channel voltage from the rising WL is still valid.

For those program-inhibit HiNAND cells, the channels are coupled directly with $V_{inhibit}$ from a $V_{inhibit}$ pump circuit through a preferred metal0 LBLps in HiNAND2 array or from a metal0 GBLps line from HiNAND1 array, rather from PB. The Vt of Program-Inhibit cells would not be increased. If the Vt is E-state, then the program-inhibit cell's Vt should remain at E-state. Similarly, when A-state, B-state and C-state cells get program-inhibited, then they should stay at their respective initial A-state, B-state and C-state without being increased to next higher states.

In an embodiment, FIG. **1**A shows the Non-SBPI biased conditions associated with the HiNAND cell: gate node Vg (**19**)=Vpgm=15V-25V, source node Vs (**24**) and drain node Vd (**26**) are at MV=$V_{inhibit}$~7V (Note, $V_{inhibit}$ is directly supplied by a selected LBLps or GBLps lines). V_{TPW} (**27**)=0V, V_{DNW} (**28**)=Vdd, and Vp-sub (**29**)=0V. In another embodiment, FIG. **1**A also shows the ESBPI biased conditions: gate node Vg (**19**)=Vpgm=15V-25V, source node Vs (**24**) and drain node Vd (**26**)=$V_{inhibit}$, Vdd<$V_{inhibit}$<7V (Note, $V_{inhibit}$ is directly supplied by a selected LBLps or GBLps lines). V_{TPW} (**27**)=0V, V_{DNW} (**28**)=Vdd, and Vp-sub (**29**)=0V.

FIG. **1**B shows a preferred set of program bias conditions of 2D HiNAND cell for one or multiple-WL Program operations in 2D NAND flash cell. Again, the cell structure and device physics are the same for 2D HiNAND cell or 2D NAND cell and is also kept the same for 3D cell, too, in Read, Program, Erase, Program-Inhibit conditions without any process and design changes. After a low-power FN-channel Program operation that takes about 250 μS per SLC, 2D HiNAND cell's programmed Vts is increased from its initial negative erased-state (E-state) of Vte (≤−0.7V) to three desired positive programmed states such as A, B, C for a MLC cell or 7 positive states for one TLC cell and 15 positive states for one XLC cell.

As shown in FIG. **1**B, the following Program bias conditions associated with the 2D HiNAND cell: gate node Vg (**19**)=Vpgm=15V-25V, source node Vs (**24**) and drain node Vd (**26**) are at 0V, V_{TPW} (**27**)=0V, V_{DNW} (**28**)=Vdd, and Vp-sub (**29**)=0V. Based on the conventional NAND cell but with new concept of broken global or local bit lines hierarchical structure, the HiNAND array architecture is provided in the present invention for achieving many advantages in power reduction, reduced latency, and increased speed in Program and Read operations.

FIG. **1**C shows an exemplary eight Vt distributions of one TLC 2D or 3D HiNAND cell with 8 binary state assignments of 111, 110, 101, 100, 011, 010, 001 and 000 for 3 bits of one TLC data denoted as D**3**, D**2** and D**1**. The E-state is termed as LSB state, H-state is the MSB state, and A-state to G-state are termed as 6 CSB states of one TLC cell. The eight states from LSB to MSB include E, A, B, C, D, F, G and H states from left to right. Many other eight TLC state assignments can also be accepted for both 2D and 3D HiNAND cell and array.

As shown, there are 7 verification voltages such as VFY**1** to VFY**7** as a regular 2D and 3D NAND with 7 corresponding Read voltages such as R**1** to R**7** for one selected WL in prior-art NAND's one-WL Program scheme but for multiple selected WLs for HiNAND's multiple-WL novel Program scheme. There are plenty of different VFYn and V_{Rn} setups for multiple-state Vt for one 2D or 3D NAND cells of prior-art NAND. All these prior-art single-WL VFYn and V_{Rn} setups can be adopted by HiNAND but extended into multiple-WL VFYns and V_{Rn}s with the same biased conditions on the same row address in all selected 64 WLs either in one consolidated Block or 64 dispersed WLs in 64 dispersed Blocks of HiNAND array. For a SLC storage, only 2 states of E-state and A-state are used with n=1, 2, while a

MLC storage, 4 states of E, A, B and C are used. Similarly, for 15 states of XLC of larger assignments is used for both 2D and 3D HiNAND.

In today's 2D NAND spec, a SLC program time is about 250 μs, a MLC program time is about twice of SLC, a TLC program time is about 3× of SLC of 750 μs, and is 1.75 ms for a TLC Program, referred to N-bit cells for respective SLC, MLC, TLC, or XLC. In one-WL page Program, the program sequence starts from the bottom N-bit 2D NAND cells of WL[64] next to a top String-select transistor MG to the top N-bit 2D NAND cell WL[1] next to a bottom String-select transistor of MS per WL at a time.

More detailed six steps of one-WL Program in conventional 64-cell String of a 2D NAND is summarized below:

1st-step: Loading programmed-data cycle. The desired maximum program data in unit of one single physical WL of page with N GBLs are loaded into multiple N-bit Dynamic PBs and NX multiple Dynamic page buffers, serially or in parallel. The Program operation is then either performed in two ways: a) 1-cycle All-BL page Program scheme; b) 2-cycle of ½-BL Odd and Even logic pages Program scheme.

2nd-step: All 64 WL voltages of one selected Block pre-setting cycle. All gate lines of 64 selected WLs and two String-select transistors in one selected NAND Block are preset to the 1st-stage of the desired biased voltage such as Vpass of 10V with V_{SSL}=Vdd (bottom string-select transistor MS's gate) and V_{GSL}=Vss (top String-select transistor MG's gate) to avoid BL leakage in one selected NAND Block.

3rd-step: GBL $V_{inhibit}$ and Vss Precharging cycle of one selected WL. All N-bit GBL lines are coupled to the desired $V_{inhibit}$ and Vss in one selected WL in accordance with the desired page data stored in each PB at top of NAND array prior to Program operation.

4th-step: Single-WL simultaneous Program cycle. Only one selected WL in the selected Block is then coupled to a ramping voltage of Vpgm (15V-25V) for one iterative program pulse with a width ranging from 10 μs to 20 μs. The remaining 63 unselected WLs voltage are kept unchanged at Vpass of 10V. Different PI methods such as SB, LSB and EASB are used for Program. There are many un-selected Vpass voltages proposed by many prior-art NANDs. These different Vpass voltages include Vpass1, Vpass2 to VpassJ. The voltages of Vpass1 to VpassJ vary from as low as Vss to Vdd to Vpass.

5th-step: Single page or WL Program verification cycle. All N-bit GBL capacitors are precharged to Vdd-Vt from top N-bit PB for 1-cycle All-GBL Read or 2-cycle ½-GBL Read. The precharged voltage of Vdd-Vt in each metal1 GBL is V_{GBL}=Vdd-Vt=0.7V to 1.0V. In this cycle, a slow and high pre-charged GBL current happens. A check of N-bit or ½N-bit data comparison is performed between the desired WL programmed data stored in the static-PG from system with the programmed data read out from one selected WL. If data comparison is matched, then Program is ended. If fails, then the Program and Program-Verify iteration are continued to the preset loops.

6th-step: Repeat single-WL Program and Program-Verify operation until the program time spec is over. The iterative single-WL Program and Program-Verify are performed only when the programmed data fails to meet the desired stored data in PB. The data can be SLC, MLC, TLC, and XLC or even the analog data with more than 16 Vt states per cell.

The present invention provides embodiments one- or multiple-WL and All-BL simultaneous Program operations for 2D HiNAND array, where the number of steps and the function of each step are different from above series of steps. Details will be found throughout this specification and particularly in subsequent paragraphs in accordance with FIG. **2**A and FIG. **2**B.

FIG. **1**D is a cross-sectional view of memory unit device configuration of a conventional U-shape vertical-channel 3D memory String that comprises eight 3D NAND cells. As shown, one U-shape 3D NAND 8-cell String is configured with one separate drain-string-select transistor **81** and one source-string-select transistor **82** respectively coupled at two ends. Layer **51** is a Vss metal0 line running in row direction of memory array and layer **52** is a metal1 bit line (BL), running in column direction and perpendicular to the metal0 Vss line. This 3D NAND String is formed on U-shaped body **74** with eight cells, such as **71***d*, **71***a*, etc including a gate insulation layer **73** being stacked in stacking direction. Additionally, a back-gate transistor **61** with same gate material including back-gate hole **62** is formed on the same body **74**B(**74**) at the bottom of the stack. The blocking insulation layer **73***a*, charge-trapping layer **73***b*, and tunnel insulation layer **73***c* are shared by all 8 cell transistors and the back-gate transistor **61**. But the drain and source NMOS string-select transistors **81** and **82** are respectively using the non-charge-trapping layers **87** and **88** with gate insulation layer **85** and **86** in between. The drain and source side holes **83** and **84** are formed respectively to penetrate the gates **81** and **82**. The non-charge-trapping layer **87** of the drain-string-select transistor **81** is connected to the metal1 layer **51** via another metal layer **55** in the stack direction. The detailed description of the memory unit device can be referred to a vertical-channel 3D NAND scheme shown in U.S. Pat. No. 8,169,826 B2, titled with "Nonvolatile Semiconductor memory Device", and incorporated fully for references.

Throughout the disclosure of the specification, it will be seen that a preferred HiNAND array architecture with broken GBL or LBL scheme can be applied to convert the above U-shape vertical-channel 3D NAND structures to a 3D HiNAND structure for many advancements in Multiple-WL and All-BL Program, Read, and Program-Verify operations. The number of 3D NAND cells in a String can be flexibly extended from 8 cells shown in FIG. **1**D to 16, 32 or even 64 for more area reduction.

Similarly, other known vertical 3D NAND structures can also be turned into a 3D HiNAND1 or HiNAND2 broken-BL array structure for Multiple-WL and All-BL operations. The same techniques disclosed here in this application can be also applied to different configurations of alternative 3D NAND structures. For example, FIG. **1**E shows respective side cross-sectional view and top cross-sectional view of two conventional device configurations of an alternative vertical-channel 3D memory String. As shown in right side of the figure, an option2 configuration for a conventional 3D vertical NAND string is formed on substrate **100** with a lower electrode **102** below channel **1** and an upper electrode **202** over the channel **1** having a pillar shape perpendicular to the substrate **100**. A plurality of control gate electrodes **3** formed over a stack of multiple device levels around the pillar shaped channel **1**. A blocking dielectric **7**, having a C-shape in the side cross-sectional view, is located adjacent to and surrounded by the control gate electrodes **3**. A plurality of discrete charge-trapping segments **9** is respectively disposed in the opening portion of the C-shaped blocking dielectric **7** and coupled around the channel **1** via a surrounding tunnel dielectric **11**. For the option 1 configuration shown in left side of the figure, the channel **1** is hollow inside which is filled with an insulation fill material **2**. The top cross-sectional view reveals clearly the relative positions

of the channel **1** (as well as fill material **2**), the tunnel dielectric **11**, the charge-trapped segments **9**, and the blocking dielectric **7**. The upper electrode **202** is the equivalent local metal1 line laid out to connect each vertical-channel 3D NAND String and the lower electrode **102** is connected to metal0 CSL line. The details of the vertical-channel 3D NAND cell technology shown above can be referred to U.S. Pat. No. 8,461,000, titled with "Method of Making Ultra-high Density Vertical NAND Memory Device", incorporated fully as references. Based on the above 3D NAND cell String configuration by introducing a scheme with broken metal2 GBL, a broken metal1 LBL, metal0 for CSL, and metal0 LBLps line, a novel 3D HiNAND broken-BL hierarchical structure can be easily made for performing preferred Multiple-WL and All-GBL simultaneous Erase, Erase-Verify, Program, Program-Verify, and Read operations according to embodiments of the present invention. Details of the 2D (and 3D) HiNAND broken-BL hierarchical structure can be found throughout the specification and particularly below.

FIG. **2**A is a circuit diagram of a 2D HiNAND1 array including 1-level broken-BL hierarchical structure for multiple-WL and All-GBL simultaneous Erase, Erase-verify, Program, Program-Verify, and Read operations according to a specific embodiment of the present invention. As shown, the 2D HiNAND1 array has 1-level broken-BL metal1 lines and one 2-sided page buffer (PB). In an embodiment, the 2D HiNAND1 array preferably comprises J HiNAND1 Groups, such as Group 1 to Group J, arranged in column (or Y) direction of a 2D matrix of NAND cells. The J broken-metal1 BL lines form J capacitors C_{GBL} in series divided by J−1 NMOS transistors, MGBL, where J is an integer selected from 8, 16, or greater. In other words, between any two adjacent C_{GBL} capacitors of two adjacent Groups, there exists one bridge NMOS MHV device of MGBL transistor to connect two adjacent divided metal1 C_{GBL} lines or capacitors. For total J HiNAND1 Groups, there are total J−1 divided M_{GBL} transistors but J broken-GBL divided capacitors such as C_{GBL_1} to C_{GBL_J-1} per one column of the 2D HiNAND1 array.

Each HiNAND1 Group is further divided into L Segments in Y-direction (column direction) by L−1 Segment-select transistors, MDBLp, connected by shorter metal1 line within. The L Segments include Segment 1 to Segment L from top to bottom connected by L shorter broken metal1 lines (local capacitors such as CGBL_1_1 to CGBL_1_L) in each Segment. Furthermore, each HiNAND Segment is preferably divided further into K Blocks connected by K shorter metal1 lines in series in column direction. Each HiNAND1 Block further comprises N-bit NAND Strings that are cascaded in X-direction (row direction). Each HiNAND1 String comprises m NAND cells in series and sandwiched by one top and one bottom String-select transistors, MS and MG, respectively, where m=8, 16, 32, 64, 128 or any selected integer.

In addition, one end of each bit line for each Segment is connected to a corresponding metal0 power line, GBLps, along the X-direction through a corresponding NMOS transistor, MLBLs. This GBLps line is used for either precharging the local broken metal1 shorter Segment GBL line with a voltage up to $V_{inhibit}$ as explained above but also used for discharging it to Vss after program.

From top static-PB (Page-Buffer) viewpoint, all J HiNAND1 Groups with J C_{GBL} capacitors are connected in series from the top Group 1 capacitor C_{GBL1} directly and then through J−1 M_{GBL} bridge transistors and J−1 metal1 C_{GBL} capacitors to reach the bottom and last C_{GBLJ} capacitor. From circuit viewpoint, the top static-PB of HiNAND1 array would have the smallest RC loading because only one $1\times C_{GBL}$ capacitor but zero resistance when reading the top Group 1 WL data without a need going through one transistor resistor MGBL at all with all with J−1 transistors MGBL being shut off in non-conduction state by setting control signals DIV_EN[1]= . . . =DIV_EN[J−1]=Vss during the Group 1 Read and Program operations. In contrast, in HiNAND1 array, the largest RC loading on each broken GBL line of each bit of static-PB when one WL is read out from Group J, which suffers the highest capacitances of $J\times C_{GBL}$ capacitors and J−1 resistances of J−1 MGBL transistors by setting control signals DIV_EN[1]= . . . =DIV_EN [J−1]≥Vdd+Vt+ΔV_{margin} to fully turn on the J−1 MGBL transistors to allow full-passage of BL voltage among L Segments of J Groups.

The precharge and discharge of each C_{GBL} capacitor can still be realized by connecting each broken C_{GBL} line (corresponding to each Segment) to each corresponding metal0 power line LBLps through each corresponding divided BL transistor MLBLp by setting control signals SEG_1 [1]= . . . =SEG_1[L]=Vdd or a higher Vread voltage.

In summary, HiNAND1 array is a circuit with 1-level broken Group and Segment GBL hierarchical structure. Although there only one metal1 line used to divide each long GBL line into broken ones for Groups and Segments, the preferred multiple-WL and All-GBL simultaneous Erase, Erase-Verify, Program, Program-Verify, and Read operations can be performed in either Consolidated or Dispersed Blocks for SLC, MLC, TLC, and XLC storages. More details about these operations would be explained throughout the specification and particularly in several paragraphs below in accordance with a 2-level broken-BL hierarchical HiNAND2 array circuit shown in FIG. **2**B.

FIG. **2**B is a circuit diagram of a 2D HiNAND2 array including 2-level broken-BL hierarchical structure for multiple-WL and All-GBL simultaneous Erase, Erase-Verify, Program, Program-Verify, and Read operations according to another specific embodiment of the present invention. This diagram is merely an example, which should not unduly limit the scope of the claims herein. One of ordinary skill in the art would recognize many other variations, modifications, and alternatives. As shown, FIG. **2**B is a specific embodiment of HiNAND2 array circuit with a 2-level broken-BL hierarchical structure. The HiNAND2 array includes J Groups, such as Group 1 to Group J, of broken GBL lines associated with J broken metal2 C_{GBL} capacitors located at topological higher level1 throughout each HiNAND2 column. Between any two adjacent metal2 C_{GBL} capacitors of two adjacent Groups, there exist one NMOS GBL-divided transistor MGBL (similar to that in HiNAND1 array circuit, see FIG. **2**A). For total J HiNAND2 Groups, there are total J−1 GBL-divided transistors MGBL respectively separating total J broken metal2 capacitors, such as C_{GBL_1} to C_{GBL_J}, per one 2D HiNAND2 column.

Along Y-direction of the HiNAND array, each HiNAND2 Group is further preferably divided into L similar Segments, such as Segment 1 to Segment L, equally or unequally. Each Segment is connected by one local broken metal1 LBL line which is located one-level lower than the top level metal2 GBL line (or C_{GBL} capacitor) to form a shorter local capacitor, C_{SEG}. Furthermore, each HiNAND2 Segment (associated with each C_{SEG}) is further divided into n sub-segments of K Blocks, such as Block 1 to Block K for sub-segment 1, Block K+1 to Block 2K for sub-Segment 2, . . . , till Block K×(n−1)+1 to Block K×n for sub-Segment n, by n−1 DBL-divided NMOS transistors, MDBLp. Correspondingly each

sub-Segment is associated with a broken-LBL metal1 line that has a parasitic capacitor C_{LBL}, which is the smallest capacitance unit configured to be pre-charged up to $V_{inhibit}$ voltage for multiple-WL Program operation. Each HiNAND2 Block further includes N-bit NAND Strings, extending from left to right across whole HiNAND2 array in X-direction. Each HiNAND2 String includes M NAND cells connected in series and sandwiched by one top and one bottom String-select transistors, MS and MG, respectively, where typically M=64 in FIG. **2**B but can be other integer numbers such as 16, 32 or 128. The preferred HiNAND2 String architecture and process and layout basically is identical to prior-art 64-cell NAND String in terms of cell size and the basic Erase, Program and Read conditions.

From 1-sided top N-bit PB viewpoint, all J HiNAND2 Groups with J C_{GBL} capacitors are connected in series starting from the top Group 1 C_{GBL1} capacitor directly, then through J−1 MLBLp LBL-divided transistors per GBL column to the bottom last Segment C_{SEGJ} capacitor through n MDBLp Segment-divided transistors per Segment.

From circuit viewpoint, the top N-bit PB of the HiNAND2 array would be associated with the smallest RC loading because only one $1\times C_{GBL}$ capacitor but zero resistance along the path when reading the top Group 1 WL data without a need going through one transistor resistor MGBL at all with all J−1 transistors M_{GBL} being shut off in non-conduction state by setting control gate signals DIV_EN[1]= . . . =DIV_EN[J−1]=Vss during the Group 1 Read and Program operations. In contrast, in HiNAND2 array would be associated with the largest RC loading on each GBL line of each bit of the static PB when one WL is read out from bottom Group J, which suffers the highest capacitances of $J\times C_{GBL}$ capacitors and J−1 resistances of J−1 transistors MGBL by setting control gate signals DIV_EN[1]= . . . =DIV_EN[J−1]≥Vdd+Vt+ΔV_{margin} to fully turn on J−1 transistors MGBL to allow full-passage of BL voltage among L Segments of J Groups.

In 1-level BL structure, for J−1 broken-GBL metal1 lines per one GBL column, there is no any pull-down transistor device connected to Vss and power lines. While in the 2-level BL structure, each metal2 C_{GBL} capacitor or divided metal2 GBL line can connect via one dedicated pull-down transistor to a horizontal (X-direction) bus (e.g., LBLps_1[1] for Segment 1) located at a level even lower than metal1 LBL lines. In an embodiment, as shown in FIG. **2**B, to save the whole HiNAND2 silicon area, this pull-down device like each MLBLs transistor is removed. Instead, the precharge and discharge of each broken-Group C_{GBL} capacitor can still be realized by connecting each C_{GBL} to each corresponding local metal1 LBL line through each corresponding LBL-select transistor MLBLp per Segment by setting control signals SEG_1[1]= . . . =SEG_1[L]=Vdd and by connecting the local metal1 LBL line (or multiple metal1 broken-LBL lines via corresponding LBL-select transistors MLBLs for all sub-segments) to a common metal0 LBLps power line.

In the following sections, the detailed Multiple-WL and All-BL Read and Program operations for the HiNAND2 array circuit (FIG. **2**B) will be explained with reference to HiNAND1 shown in FIG. **2**A in accordance with the preferred set of bias conditions shown in FIG. **8** of the present specification.

As explained before, this HiNAND2 array has 2-level broken-GBL hierarchical structure. In an embodiment, the single level long metal1 GBL line used in conventional NAND array has been replaced by a top level metal2 line that is purposely divided into J broken and equal C_{GBL} capacitors. In a specific embodiment, each metal2 broken GBL line length and capacitance can be flexibly divided not equally. For example, the last one metal2 broken GBL line associated with Group J is preferably made much longer than that associated with the first metal2 broken-GBL line associated with Group 1 because Group J is the farthest Group relative to the 1-sided static PB at top of the HiNAND2 array. Thus the dilution of stored charge to the PB would be the worst case. Thus, if it is designed to have larger C_{GBL} capacitance for the farthest Group J, it can have more charges so as to have less dilution at PB. In other words, one option of HiNAND array is to have longer broken GBL line for Group J.

The HiNAND2 array architecture is divided into J Groups by inserting J−1 NMOS MHV (~7V) Group-divided transistors MGBL into each long GBL metal2 line. In other words, the conventional one long global metal1 GBL metal line is elevated to a metal2 line and then is divided by J−1 transistors MGBL into J metal2 broken GBL lines respectively associated with J GBL capacitors (denoted as C_{GBL_1} to C_{GBL_J} capacitors) per HINAND column.

Each MHV transistor MGBL acts as a bridge device between two adjacent C_{GBL} capacitors associated with the same broken metal2 line. The top end of each metal2 C_{GBL1} capacitor is directly connected to one corresponding input and output (I/O) of N-bit PB (Page-Buffer). The J value is preferably set to be 16 or 8 but not more than 16 for a reliable DRAM-like charge-sharing Read operation and for cutting the power consumption to 1/16 for one-WL and All-GBL Read of HiNAND2 array.

In an embodiment, there are L lower-level, smaller local metal1 LBL lines or capacitors, C_{SEG}, per each corresponding top-level metal2 C_{GBL} capacitor. In other words, the length ratio of the local LBL line to GBL line per Group is defined as: Ratio(length)=GBL/LBL=L.

Accordingly, each Group within the HiNAND2 array is divided into L Segments, from Segment 1 to Segment L, laid out in Y-direction. Each Segment in any Group has one dedicated local metal1 bit line associated with a C_{SEG} capacitor. Furthermore, each C_{SEG} capacitor is divided into n broken-LBL metal1 lines by n−1 LBL-divided transistors MDBLs with their gates commonly tied to a control signal DI_1__1~n[1], . . . , or DI_1_1_n[L], depending on it is in which Segment, 1 through L. Each broken-LBL metal1 line is associated with a smallest parasitic capacitor, C_{LBL}, connected to K Blocks in parallel. In an embodiment, every local LBL in each Segment, e.g., Segment 1, of Group J connects to one horizontal (X-direction) metal0 power line LBLps_J[1] (see FIG. **2**B) via a pull-down transistor MLBLs. In another embodiment, every metal1 broken-LBL line in each sub-segment in Segment 1 of Group J is connected commonly to the metal0 power line LBLps_J[1] respectively via separate pull-down transistor MLBLs. In yet another embodiment (not shown in FIG. **2**B), two mirrored Segments (of Group J) share one horizontal metal0 power line LBLps_J[L/2]. In this case, there are total L/2 LBLps_1 lines per Group (J) such as LBLps_J[1] to LBLps_J[L/2].

In the example of FIG. **2**B, the preferred HiNAND2 array has an optimal value of L≤4 for a tradeoff between the precharged supply program-inhibit $V_{inhibit}$ current and number of LBL-divided transistors MLBLs per Group. For example, if L=4, that means one Group contains four Segments so that minimum four rows of MLBLs transistors per Group are required for multiple WL Read operation. Of course, when each Segment is divided into n sub-segments for a preferred advantage of faster simultaneous multiple WL Program operation, n−1 more rows of MLBLs transis-

tors are needed per Group. But one LBLps_J power line can be shared by two adjacent Segments and also shared by n sub-segments within each Segment for area reduction.

Each MLBLs transistor will be used to precharge charges up to $V_{inhibit}$ voltage~7V during Program and selectively discharge to Vss after Program operation from LBLps_J metal0 line to each corresponding C_{LBL} capacitor that is initially preset to Vss voltage.

In addition, each MLBLs transistor has second usage to precharge and discharge charges of Vdd in both metal1 C_{LBL} and metal2 C_{GBL} through the corresponding MLBLs and MLBLp transistors per one Segment during Multiple-WL and All-BL Program and Read operations when control signals PRE_J and SEG_J are set to Vdd and LBLps_J is set to Vdd in an one-shot pulse.

Each HiNAND2 Jth Group comprises N metal2 GBL lines such as GBL_J[1] to GBL_J[N], extending in X-direction and laid out in parallel to word lines (WLs). Each long BL column comprises J broken metal2 C_{GBL} lines (or capacitors) and laid out in Y-direction perpendicular to WLs. Only the top metal2 C_{GBL} lines are connected directly to N Inputs/outputs of a top circuit block comprising of one N-bit static-PB, one N-bit Multiplier and one N-bit Sense Amplifier (SA).

In an embodiment, each broken C_{GBL} metal2 line of each Segment from Segment 1 to Segment L within each HiNAND2 Group is laid out in such a way with a preferred capacitance or length ratio $R=L_{LBL}/L_{GBL}\leq 1/16$, where L_{LBL} is the length of a metal1 LBL line, while L_{GBL} is the length of a metal2 GBL line. Therefore, by applying a preferred DRAM-like BL charge-sharing technique at least to the farthest Jth Group for performing Multiple-WL and All-GBL Read operation in unit of one full physical WL or a full page on this HINAND2 array, the precharge voltage (current) can be reduced by above similar ratio.

Firstly, detailed operation of the preferred DRAM-like charge-sharing technique for one-WL and All-BL HiNAND2 Read will be explained below. Similarly, the same technique can be easily extended to Multiple-WL and All-BL Read.

For typical NAND array with one-level BL structure, there are two schemes of Read operation. One scheme is called as 1-cycle All-BL Read, the other scheme is called as 2-cycle Odd/Even Read. In this HiNAND2 array with multiple-level BL hierarchical structure, the All-BL Read scheme is changed to All-GBL or All-LBL Read scheme. The All-BL Read scheme is a Voltage-sensing scheme that requires a precharge of V_{GBL} prior to voltage sensing. The advantage of the voltage sensing scheme is low-power consumption but is prone to fail due to the proximity noise coupling effect happening between adjacent BLs and adjacent WLs.

A typical All-GBL Read method based on conventional NAND uses a voltage-sensing and precharge-GBL scheme. It is like a 1-cycle Read from one full physical WL or page of the NAND array. All C_{GBL} capacitors are first precharged to Vdd-Vt prior to cell sensing. Subsequently, upon sensing, the precharged voltage of Vdd-Vt of each C_{GBL} is then either discharged to Vss for those selected NAND cells in On-state or retains the precharged Vdd-Vt for those NAND cells in Off-state in one or more selected WLs applied with WL Read voltage V_{Rn}. The advantage of this voltage-sensing scheme is no DC current flow, thus Read power consumption is smaller. But the disadvantage is higher rate of producing fault data bits due to the severe coupling noise generated between two adjacent BL-BL and WL-WL.

The WLs and BLs bias conditions of the selected String in the selected Block are listed as: a) Read voltage for a select WL=V_{Rn}, n=1 for SLC Read but n=3 for MLC Read; b) V_{R1}=0V for a SLC Read to distinguish one erased E-state and one programmed A-state; c) V_{R1}=0V, V_{R2}=2.5V and V_{R3}=4V for 4-state MLC Read, where V_{R2} is used to distinguish an A-state and a B-state and V_{R3} is used to distinguish a B-state and a C-state; d) V_{GBL}=0.7V-1.0V is precharged to all metal1 GBL lines initially prior to reading by shutting off NAND Strings; e) V_{GBL} retains 0.7V-1.0V, if the selected NAND cell's Vt is above V_{Rn}, thus no conduction of cell current when V_{Rn} is applied to one selected WL along with M−1 non-selected WLs=Vpass=6V (assuming it is a M-cell NAND String); and f) V_{GBL} is discharged to 0V, if the selected NAND cell's Vt is below V_{Rn}, thus a conduction of cell current happens to pull down the precharged GBL of 0.7V-1.0V.

Another typical All-GBL Read method in conventional NAND uses current-sensing and non-precharge-GBL scheme. The disadvantage of this current sensing scheme is high read power consumption because of DC current flow. But the advantage is an immunity of severe coupling noise generated between the adjacent BL-BL and WL-WL, thus the data is more solid. Unfortunately, each NAND String's equivalent resistance could reach up to 1-10 MΩ due to 100 nA String current. Thus, a current-sensing scheme for NAND String Read operation has more design difficulties and challenges than voltage-sensing scheme.

Yet another typical Read operation in conventional NAND uses Odd/Even-GBL Read scheme. Under this type of Read operation, it is like a 2-cycle Read from one full physical WL or page of NAND array. The whole physical WL is alternately divided into 2 logic SLC pages with halves of all GBLs based on odd/even numbered BLs. One half GBLs are denoted as GBLo lines and the other half GBLs are denoted as GBLe lines. The idea of this scheme is to use the unselected interlaced GBLs as a shielding GBL. For example, when reading all GBLo lines, then all GBLe lines are either biased at Vss or Vdd-Vt as the shielding GBLs to protect the signal development of all GBLo from corruption due to the coupling noises from discharging between BL-BL.

Recently, the shielding voltage of GBLe or GBLo lines is preferably biased to be Vdd-Vt, rather Vss, the value of Vdd-Vt is set about 0.7V to 1.0V, so that WL coupling SBPI scheme is used to eliminate or mitigate the Vpgm WL stress with superior P/E cycles on those unselected, programmed cells located in the shielding GBLs. However, this 2-cycle Odd/Even GBL voltage-sensing scheme consumes more power because one time precharge of the whole non-broken C_{GBL} is required.

The WLs and BLs bias conditions of the selected String in the selected Block are listed as following: a) Read voltage for a select WL V_{Rn}, n=1 for SLC but n=3 for MLC; b) V_{R1}=0V for a SLC to distinguish E-state and A-state; c) V_{R1}=0V, Vr2=1V, V_{R2}=2.5V and V_{R3}=4V for MLC, where the V_{R2} is used distinguish A-state and B-state and V_{R3} is used distinguish B-state and C-state; d) V_{GBLo}=0.7V-1.0V or 0V for GBLo shielding effect when GBLe lines are selected for half-WL Read; e) V_{GBLe}=0.7V-1.0V 0V for GBLe shielding effect when GBLo lines are selected for half-WL Read; f) V_{GBLo}=0V, if the selected NAND cell's Vt in GBLo is below V_{Rn}, thus a conduction of cell current; g) V_{GBLo}=0.7V-1.0V, if the selected NAND cell's Vt in GBLo is above V_{Rn}, thus no conduction of cell current; h) V_{GBLe}=0V, if the selected NAND cell's Vt in GBLe is below V_{Rn}, thus a conduction of cell current; and i) V_{GBLe}=0.7V-

1.0V, if the selected NAND cell's Vt in GBLe is above V_{Rn}, thus no conduction of cell current.

In an embodiment, Multiple-WL and All-GBL simultaneous Read operation with a preferred DRAM-like charge-sharing technique in HiNAND2 array is provided in the present invention with reference to a preferred set of biased conditions, as shown in FIG. **8**. In HiNAND2 array, both All-GBL and Odd/Even GBL schemes can be adopted for Read operation. But All-GBL Read scheme is preferably adopted over Odd/Even GBL Read scheme for achieving the superior performance and reliability. Therefore, only details about the All-GBL Read scheme would be provided. One step further, Multiple-WL and All-BL Read scheme is proposed below to achieve 10-fold or even 100-fold improvements in both Read and Program operations over conventional NAND by using 2 metal lines only for this 2-level broken-BL hierarchical structure without changing the existing cell structures of NAND cell and conditions for operating Read, Program, and Erase. In addition, the HiNAND2 circuit die size at least is kept the same as the conventional NAND because only few NMOS divided devices are added in the conventional long and heavy GBL that has hundreds or thousands of NAND cells in one GBL column. Thus many advantages of the HiNAND2 array with 10× to 100× performance improvements over conventional NAND are achieved without causing bigger die size, regardless of 2D or 3D NAND technologies.

Note, HiNAND2 All-GBL Read scheme is a new kind of All-BL Read scheme. Although it still uses a precharge method for all GBL without the division into two alternative GBLe and GBLo groups, the precharged capacitance is cut down to 1/16 of C_{GBL} of conventional NAND. Correspondingly, the voltage sensing data is multiplied 2-3 folds first and then fed to latch-type SA and further amplified by a DRAM-SA operation technique. Details of the charge-sharing, sensing voltage multiplication, and SA amplification can be found in U.S. patent application Ser. No. 14/283,209, filed on May 20, 2014 and U.S. patent application Ser. No. 14/316,936, filed on Jun. 27, 2014, all fully incorporated as references for all purposes.

For example, All-GBL lines of HiNAND2 array are pre-discharged to Vss through one MHV (~7V) device MGBLs through LBLps power line, which is made of similar String-select NMOS MHV transistor of MS or MG of the HiNAND1 array shown in FIG. **2**A. Since the MHV device has a thinner gate oxide compared to a HV (20V) of transistor used in the conventional NAND, plus the broken-GBL capacitance is only 1/16 of unbroken-GBL capacitance, thus the discharge and charge speed of broken GBL capacitance is at least about 8-fold faster due to the smaller conducting transistor's resistance.

As an example, a set of bias conditions of HiNAND2 One-WL & All-GBL simultaneous Read operation are listed here, which is like a 1-cycle Read from one full physical WL or page of HiNAND2 array. For one selected page in the selected Block, the WLs and BLs bias conditions include 1) Read voltage for a select WL=V_{Rn}, n=1 for SLC Read, but n=1, 2, 3 for MLC Read; 2) V_{R1}=0V for a SLC read to distinguish E and A state; V_{R1}=0V, V_{R2}=2.5V, and V_{R3}=4V for a MLC read. 3) V_{R2} is used to distinguish A-state and B-state. V_{R3} is used to distinguish B-state and C-state.

The whole concept of the HiNAND2 Read operation is to use charge-sharing scheme like DRAM along with the WL-voltage. The precharge is still needed for this HiNAND All-GBL Read, but not to precharge the long and heavy unbroken GBL capacitor in the conventional NAND to Vdd-Vt that would consumes too much precharge-power due to each big GBL capacitance of 3-5 pf, instead, to precharge each broken metal2 C_{GBL} capacitance in the HiNAND2 array which can be reduced to only 1/16 of original big GBL capacitance of 3-5 pf to become about 0.1875 pf~0.3125 pf in layout. Thus the precharge current can be also reduced to 1/16 if the precharged voltage is same as Vdd-Vt. For HiNAND charge sensing, the precharged voltage is preferably changed to Vdd for more stored charges with a bigger signal for more reliable charge-sharing operation. The HiNAND2 Multiple-WL and All-GBL Read operation is divided into eight operation steps/cycles in accordance with various biased conditions shown in FIG. **8** and FIG. **9** of the specification as well as the HiNAND2 array circuit shown in FIG. **2**B of the specification.

Step 1: To simultaneously predischarge the voltages of all broken N×LBL/N×GBL capacitors to multiple mixed power/Vss lines denoted as a LBLps line in one or multiple Segments in one or multiple Groups.

In an embodiment, the HiNAND2 array includes preferably only one power line of LBLps per one Segment within one Group for saving silicon area. Thus there are several ways to pre-discharge each broken C_{GBL} and associated C_{SEG} capacitors. For example, each Group has J Segments, thus it has J LBLps lines. Any charges stored in each C_{SEG} can be easily discharged through each corresponding connection device MLBLs by setting its gate signal PRE_1[J] to Vdd and connecting corresponding LBLps line to ground Vss. The charges stored in each bigger C_{GBL} per Group can have 1 to J discharged paths through 1 to J MLBLs transistors to corresponding 1 to J LBLps lines. But more MLBLs transistors, more PRE_1[J] control lines have to be coupled to Vdd, thus more power consumption is resulted. Additionally, each broken C_{GBL} capacitance is set to be only 1/16 of each conventional unbroken long and heavy C_{GBL}, thus one LBLps line is selected for discharging a selected one C_{GBL}, one C_{SEG}, and one corresponding selected NAND String.

Thus the selected PRE, SEG, SSL control signals are coupled to Vdd and the LBLps to Vss as seen in the first column of table in FIG. **9**. If the Segment 1 of Group 1 are selected, then $V_{PRE_1[}1]=V_{SEG_1[}1]=V_{SSL[1]}$=Vdd and $V_{LBLps[1]}$=Vss. The signals corresponding to rest J−1 Segments $V_{PRE_1[J]}=V_{SEG_1[J]}=V_{SSL[1]}$=Vss and $V_{LBLps[1]}$=Vss. Since the discharge current is flowing through each corresponding MHV transistor MLBLs simultaneously and collectively, thus the discharge time is as fast as 100 ns or less for all selected LBL and GBL lines and capacitors.

Step 2: To precharge one selected local smaller C_{SEG} and one associated C_{GBL} per column, where $C_{SEG} \ll C_{GBL}$. Several embodiments of the precharging method for HiNAND2 Multiple-WL and All-BL Read operation are provided.

In an embodiment, Read operation is to randomly read out data preferably from All-GBL and J-WLs simultaneously based on only one same selected WL address per Segment per Group, where J≤16. The HiNAND2 array architecture allows total J pages of data to be read simultaneously out from J different Groups but on the basis of one WL per one Group. In other words, a multiple-WL randomly Read scheme means each selected WL in different Segment and Groups remain at a same position in corresponding selected NAND String with a same address. Different address multiple-WL Read scheme is possible if the Block's WL address can be locked in for the random-select ones.

In another embodiment, Read operation is to read multiple WLs simultaneously and preferably from one Segment of one or more Groups. In this embodiment, the HiNAND2 scheme flexibly allows read more than one WL from one or more selected Segments within one or more Groups simul-

taneously. For example, it allows to read L pages (WLs) of data simultaneously from L Segments (one WL per one Segment basis) of the selected Groups which are laid out near top PB with much less C_{GBL} loading for more reliable charge-sharing SA operation.

The preferred precharge happens on N shorter LBL metal1 C_{SEG} capacitors that have only 1/16 of each broken C_{GBL} capacitance. These N LBL lines include LBL_1[1] to LBL_1[N] in the selected multiple Segments per Group. Unlike Vdd-Vt precharge voltage for prior-art NAND through a 20V long-channel device with a very slow precharge time (~5 μs), the precharged LBL voltage is preferably set to be Vdd of 1.8V for the HiNAND2 array through a MHV (7V) transistor MLBLs by setting the gate control signals PRE and SEG to Vread>Vdd so that a full Vdd passage to N C_{SEG} capacitors, as shown in the second column of table in FIG. **8**. Other associated signals such as the selected SSL, LBL, and GBL are set to Vdd but the unselected SSL, LBL, and GBL are set to Vss. Vdd voltage greater than 1.8V can be used as well but the precharged power consumption would be increased accordingly.

In addition to precharge the selected LBLs and GBL lines (or capacitors), the selected and unselected WLs in the selected Block in the selected Segments of a selected Group are also preferably precharged to V_R and Vread respectively and simultaneously to save total time delay of Read operation. V_R voltage is Read voltage for distinguish E-state or A-state of a selected NAND cell. Vread voltage typically is set to be around 6V. The Vread voltage for unselected WLs is called Vpass.

As a result, the precharge time of the selected C_{SEG} and C_{GBL} can be completed within 100 ns, which is very fast. But Vpass precharge time for unselected WLs is much longer up to few μs. Thus among all cycle time of the BL and WL precharge step, the Vpass precharge time is the bottleneck. Note: The voltage of Vdd-Vt~0.9V in prior-art NAND at Vdd=1.8V. Table 1 shows a comparison of precharge step performed respectively for conventional NAND and HiNAND2.

TABLE 1

Comparison of precharge	Conventional NAND	HiNAND2
Precharged voltage	0.9 V(1X)	1.8 V(2X)
Precharged capacitance	100% = N × $C_{GBL(unbroken)}$	6.25% = N × $C_{GBL(broken)}$ + N × $C_{LBL(broken\ or\ non\text{-}broken)}$~N × (1/16)$C_{GBL(unbroken)}$
Precharged BL current ratio: CV	100% (1-WL & All-GBL)	1.25% (1-WL & All-GBL)
Precharged BL current ratio: CV	100% (1-WL & O/E GBL)	6.25% (1-WL & All-GBL)
Precharged GBL time	100%	~2% (negligible)
Precharged WL time (one block)	100%	100%
Precharged WL time (16 blocks)	100%	6.25%

Note:
WL precharge time means Vpass precharge time on 63 unselected WLs for a 64-NAND String. The simultaneous precharge on multiple selected WLs of the selected Blocks tremendously saves time delay for this cycle of Read operation.

Alternatively in another embodiment, as shown in FIGS. **2**A and **2**B, each Segment is further divided into n sub-Segment by n−1 NMOS 1-poly transistors. Thus each LBL metal1 line is divided into n broken-LBL metal1 line associated with an even smaller parasitic capacitor C_{LBL}. In this case, the precharged voltage through independent power line LBLps_J per Segment, the precharge operation can be performed on each sub-Segment independently and simultaneously for multiple sub-Segments in different Segments of one or more Groups to a higher voltage up to $V_{inhibit}$~7V for taking advantage of further reduced power in precharging step while still has sufficient voltage level after charge-sharing that can be amplified by the Multiplier in the PB to a value close to 1V for proper charge-sensing by Latch SA.

Step 3: To discharge C_{SEG} and C_{GBL} on one or multiple selected WLs with V_R. After all N×LBL associated N×GBL broken lines (or capacitors) are fully precharged to 1.8V simultaneously, the desired set of various control voltages of GSL, SSL and 64 WLs are respectively applied for one selected WL and multiple unselected WLs per selected one or more Blocks in the selected Segments and Groups for a preferred Multiple-WL & All-GBL simultaneous Read or Program-Verify operation with all LBL-select transistors MLBLp (connected between the LBLs and GBLs) being at off-state.

For example, for a SLC Read, then the selected WL=0V, and unselected 63 WLs=Vpass=6V and GSL[1]=Vread but SSL[1]=Vdd. For part of N×C_{SEG}, the precharged voltage will start to discharge from initial 1.8V to Vss if the corresponding NAND cells' Vt=Vte<−0.7V, an E-state, within a predetermined discharge time. For the remaining part of N×C_{SEG} their precharged voltage will not discharge and retain its initial 1.8V if the corresponding NAND cells' Vt>0, which is A-state.

Thus, after the Step 3 of Multiple-WL & All-BL Read operation, the LBL lines in the selected Segments and the broken GBL lines in the selected Groups will trap respective Vss and 1.8V voltages in accordance with the stored NAND data pattern on the selected WL of the selected Block in the selected Segment in the selected Group of this HiNAND array. After J-WL & All-BL Read, either 1.8V or Vss will be stored separately in all N×GBL_1 to N×GBL_J capacitors in accordance with the stored data in multiple WLs when all DIV_EN[1]= . . . =DIV_EN[J−1]=Vss.

The comparison of the discharged time between HiNAND2 and conventional NAND are summarized in Table 2 below. Note the discharge happens not only on 1-WL & All-GBL of one selected Block in accordance with one WL data but also happens on Multiple-WL & All-GBL in accordance with J WL data. The final read data patterns are stored in J isolated broken C_{GBL} capacitors before being dumped to PB. Note: The voltage of Vdd-Vt=0.9V in prior-art NAND at Vdd=1.8V.

TABLE 2

Comparison of discharge	NAND	HiNAND2
Initial voltage before discharge	0.9 V(1X)	1.8 V(2X)
Discharged capacitance	100% = N × $C_{GBL(unbroken)}$	6.25% = N × $C_{GBL(broken)}$ + N × C_{SEG}~N × (1/16)$C_{GBL(unbroken)}$
Discharged GBL/LBL current	1X	1X
Discharged GBL/LBL time for 1-WL and All-GBL scheme	100%	<12.5%
Discharged GBL/LBL time for 16-WL and All-GBL scheme	100%	<1%

In this discharge operation, the HiNAND2 architecture has almost one-order of improvement over state-of-art NAND in 1-WL & All-GBL Read. Assuming M(J)=16 in

FIG. **8**, then 16-WL & All-GBL discharging time is almost zero as compared to the conventional NAND. This is a big saving in NAND Read time.

For example, a typical SLC discharged time is about 10 μS for one WL read. For 16-WL read, then the total discharge time is about 160 μS. For this HiNAND2 simultaneous multiple-WL & All-GBL Read operation, the total discharging time is nearly 0. This is a dramatic improvement in NAND Read time record.

Step 4: To perform charge-sharing operations of C_{SEG} and C_{GBL} for the multiple-WL & All-GBL Read operation.

In an example with J=16 (or 16 Groups in the HiNAND array), after the previous discharge cycle, 16 respective C_{GBL} capacitors that store the isolated voltages of 0V or 1.8V in accordance with the corresponding stored data in 16 selected WLs in 16 NAND Groups of the HiNAND2 array according to an embodiment of the present invention. These 16 C_{GBL} capacitors are lined up from bottom to up of each GBL column such as GBL_J in bottom Group J to GBL_1 in top Group 1. Any two adjacent C_{GBL} capacitors are isolated by 15 off-state NMOS GBL-select transistors such as MGBL15 to MGBL1 from GBL bottom to GBL top, which is directly connected to N-bit PB.

The charge-sharing step/cycle (Step 4) can be divided into 15 sequential sub-steps for 16-WL and All-BL simultaneous Read or Program-Verify operation. Note, the simultaneous Multiple-WL & All-BL Read or Program-Verify operation means at least the following three steps: step 1 for pre-discharging LBL/GBL, step 2 for precharging LBL/GBL, and step 3 for discharging LBL/GBL can be performed simultaneously. Thus the time delay has been cut to be almost negligible in HiNAND2 as compared to the conventional NAND. But from the Step 4 to Step 8 in FIG. **8** and FIG. **9**, the remaining operation steps cannot be performed simultaneously because only one shared PB and GBL path to the PB. The 16-WL data stored in respective C_{GBL} capacitors have to be sent to the PB in sequence that starts from top Group 1, followed by Group 2, . . . , and lastly, Group J, which is Group 16 in the present example.

In a first sub-step, only the N×C_{GBL} of GBL_1[1]= . . . =GBL_1[N] in top Group 1 would be evaluated in top N-bit PB with N-bit Multiplier and N-bit SA. The rest of N×C_{GBL} capacitors in Group 2 to Group 16 would be completely isolated from each other during the read or data evaluation cycle of Group 1 to avoid data contention in each long GBL line.

In the Group 1 data evaluation Read cycle, actually, no charge-sharing occurs with other C_{GBL} capacitors of the rest 15 Groups. Thus the voltages of Vss and Vdd (1.8V) are 100% to be coupled into the PB for data evaluation without degradation. Thus, the biggest signal of Vdd and Vss are sensed by the PB when the selected WL data is read.

Once the first N-bit C_{GBL} voltages have been loaded in parallel into the only one Voltage-multiplier in the N-bit PB on top of the HiNAND2 array for data evaluation, the voltage of first N-bit C_{GBL}, GBL_1[1], . . . , GBL_1[N], has to be discharged to Vss first. In other words, GBL_1[1]= . . . =GBL_1[N] are reset to Vss before second N-bit C_{GBL} capacitors that store new voltages of second WL data to be transferred.

But before turning on second N-bit C_{GBL} capacitors of GBL_2[1] to GBK_2[N] to connect to the first N-bit C_{GBL} capacitors GBL_1[1] to GBK_1[N], the N×MLBLp have to be shut off first to isolate the selected Block in Group 1 from the selected Block in Group 2 by setting signal SEG_1[1] to Vss before setting the divided transistor gate signal DIV_EN[1] to Vread to connect N×GBL_1[2] to N×GBL_1[1]. But because the connection is preferably only happening between N×GBL_1[2] to N×GBL_1[1]. The rest connections of N×GBL_1[2] to N×GBL_1[16] are still kept isolated from each other. Thus, the rest of divided transistor MGBL gate voltages are set to be Vss, such as DIN_EN[2]=DIN_EN[3]= . . . =DIN_EN[15]=Vss.

Since the voltages of each GBL_1[2] is either Vss and Vdd of divided transistor 1.8V to share with the identical C_{GBL} of each GBL_1[1] with Vss, then the final voltages would be Vss and 0.9V stored in both GBL_1[1] and GBL_1[2] with the gate signal DIV_EN[1]=Vread=6V.

The final charge-shared voltages of either Vss or 0.9V for the second N-bit C_{GBL} capacitors would be coupled to N-bit Multiplier and N-bit SA in the N-bit PB on top for data evaluation. The sensed voltage of 0.9V from Group 2 is the second largest signal of a second sub-step of the Multiple-WL and All-BL Read and Program-Verify operations.

Since the VREF in SA is dynamically set to be ½ of sensing voltage. In Group 2 the sensing voltage is 0.9V. Thus, the VREF=0.45V. This ΔV=0.45V is big enough without a need of amplification by the Multiplier. Thus, the multiplier function can be temporarily disabled to allow the direct coupling of 0.9V and Vss from each GBL to one input of each corresponding SA to skip the Multiplier function in between. This whole operation can be controlled by the on-chip State-machine once it detects the data either from Group 1 or Group 2.

Once Group 2 WL data are successfully evaluated by the PB and data is sent out to NAND memory system, all capacitors of GBL_1[1] to GBL_1[N] and GBL_2[1] to GBL_2[N] have to be reset to Vss for the third WL data evaluation read out from Group 3, subsequently in a third sub-step. Similarly, the Read and Program-Verify or evaluation of the third WL or page in Group 3 repeat the processes as explained above.

The voltages of Vss and 1.8V of third N-bit C_{GBL} capacitors from GBL_3[1] to GBL_3[N] would be shared by both GBL_1[1] to GBL_1[N] and GBL_2[1] to GBL_2[N] capacitors with initial Vss voltage. Thus the voltages would become ⅓ due to charge-sharing in 3 identical broken C_{GBL} by setting divided transistor gate signal DIV_EN[3] to DIV_EN[15]=Vss. Similarly, both SEG_1[1] and SEG_1[2] signals are set to Vss to have the selected Blocks of Group 1 and Group 2 being isolated from Group 3 during the third WL data evaluation. The final WL sensed voltages of Group 3 are either 1.8V/3=0.6V (high) or Vss (low). Since 0.6V is still a large reliable signal for SA, thus the Multiplier function can be skipped again during Group 3 WL-page evaluation.

The above sub-steps of multiple-WL and All-GBL Read and Program-Verify operations will be repeated and finalized when the last NAND page-data in Group 16 is completed. Since the sensed voltage of GBL_J will be getting smaller and smaller when more C_{GBL} capacitors to share the 1.8V and 0V, using a Multiplier to increase the weak signal of GBL_J is required. In this 16-group HiNAND2 array, each Multiplier is enabled to function between each corresponding SA and C_{GBL} after Group 4. The Multiplier is configured to amplify GBL signal V_{GBL} at least 3 times to be sensed reliably by a DRAM-like latch-type SA (see reference patent application Ser. No. 14/283,209, commonly assigned).

All Multiplier operation and chare-sharing operation can be completed within 200 ns. Thus, the true bottleneck of Multiple-WL and All-GBL Read operation speed is the time delays during precharge and discharge of broken GBL capacitor. As shown above, these two time delays are

dramatically reduced when the simultaneous Multiple-WL and All-GBL and chare-sharing Read scheme under the HiNAND2 array with preferred 2-level broken-BL hierarchical structure.

Step 5: To perform a voltage amplification of sensed V_{GBL} by using one preferred Multiplier that is associated with one SA within the N-bit PB on top.

In an specific embodiment, in the HiNAND2 architecture, a Multiplier is configured to bear an amplification factor that is at least greater than 2 but preferred to be no greater than 5, as a tradeoff as an optimal multiplier with desirable operating time and reliable SA operation. Each Multiplier is preferred to include 3 or more capacitors being configured either in series or in parallel with multiple timing control clocks to allow the capacitors to multiply the finally sensed voltages coupled to each GBL capacitor on top of HiNAND2 array. For example, for the voltages sensed from Group 10 is 1.8V/10=0.18V. This signal is too weak to be reliably evaluated by each corresponding Latch-type SA. Thus, the Multiplier function is preferably enabled to have an amplification factor of 3 to increase 0.18V by 3 times to 0.54V for the subsequent reliable evaluation of the SA.

The required amplification of the SA has to take consideration of the mismatched characteristics of paired inputs of MOS transistors of each SA. The details can refer to the explanation of a Multiplier circuit of FIG. **2**A in later sections of the specification.

Step 6: To perform the data evaluation at Multiplier's output port by using a DRAM-like, Latch-type SA.

Again, this Latch-type SA has two inputs connected to one sensed voltage coupled from each GBL capacitor and one input coupled to a VREF with a preferred programmable values. Similarly, this SA has one clocked PMOS device coupled to Vdd and one clocked NMOS device coupled to Vss for 2-stage amplification and is commonly used in DRAM SA operation. Thus the details of this operation will be skipped here and can refer to the U.S. patent application Ser. No. 14/283,209, filed May 20, 2014, commonly assigned and incorporated by references herein for all purposes.

Step 7: To load each sensed N-bit WL data into on-chip N-bit Cache memory. This operation is essentially a final step of each Multiple-WL and All-GBL Read (or Program-Verify) operation.

Step 8: To read page (WL) data through this Cache, which can be sent to off-chip Flash controller sequentially. Once the first WL page-data is sent out to Cache memory, the second WL from Group 2 to last 16th WL from Group 16 would be sent sequentially in the form of fast pipeline format. In particular, the above operations associated with step 2) through step 6) are repeated. In the NAND spec today, the fastest read data rate is 2.5 ns 8×I/O in DDR2 operation. The time for sending out a small page is 512 B. It takes about 1.28 μs (2.5 ns/B×512 B/page=1.28 μs/page). For a large 8 KB page data per one physical WL, it will take 20.48 μs (1.28 μs×16=20.48 μs).

But the averaged NAND spec of a SLC page (WL) Read is 25 μs, 75 μs for a 4-state MLC Read, 175 μs for an 8-state TLC Read, and is about 375 μs for a 16-state XLC Read. Thus, for the Multiple-WL and All-GBL Read operation, the dramatic reduction in Read latency can flexibly provide a most powerful simultaneous Read and Program operation in ALL NAND Groups. It just needs a well planning of operating HiNAND2 array controlled by the on-chip smart State-machine or CPU.

FIG. **3** is a block diagram of a Page Buffer circuit for both the HiNAND2 and HiNAND1 arrays according to embodiments of the present invention. This diagram is merely an example, which should not unduly limit the scope of the claims herein. One of ordinary skill in the art would recognize many other variations, modifications, and alternatives. As shown, a preferred embodiment of a N-bit Static PB is configured to be inserted in a middle position between a first set of Groups (1 to D) and a second set of Groups (D+1 to J). This middle Static PB can be applied to both HiNAND2 and HiNAND1 arrays with two sets of N-bit outputs from Static Data Registers to respectively connect the first set and second set of N-bit HiNAND Groups. In a specific embodiment, the HiNAND array, either HiNAND2 or HiNAND1, is divided into two equal N-bit sub-arrays that are mirrored in Y-direction but with half-density separated by the middle Static N-bit PB. The middle Static PB includes one static N-bit Cache Register and one static N-bit Data Register. The definition of Static PB means that the data bits are made of real latch circuits that can hold data forever as long as no power loss. Conversely, the Dynamic Data or Cache Registers are made of either broken GBL lines or broken LBL lines to hold the Program-bit pattern of Program-Inhibit voltage patterns in the HiNAND array of the present invention.

As illustrated in previous sections, from one middle PB prospect, the farthest Group is Group J in the lower HiNAND sub-array (with the second set of Groups) and Group 1 in the upper HiNAND sub-arrays (with the first set of Groups). If these two farthest Groups, Group 1 and Group J, are made with the same equal length of the broken GBL line and Segment LBL line as Group D−1, Group D, Group D+1, and Group D+2 that near the middle Static PB, then they suffer the highest loss of charge-sharing signal voltage level when sensed by the middle Static PB. Therefore, the minimum capacitance of each broken GBL or LBL is determined by the worst-case charge-sharing effect in the farthest Groups such as Group J and Group 1 if all GBL and LBL metal lines are made with an equal length or capacitance.

Each bit of N-bit PB has two set of N-bit outputs. The first set N-bit outputs are connected to the upper HiNAND sub-array from Group D up to Group 1 which is the farthest Group and the second output is connected to the lower HiNAND sub-array from Group D+1 to Group which is another farthest Group. This HiNAND array with a middle Static PB scheme has an advantage of owning two Groups with faster operation speed and lower operation power, such as Group D and Group D+1, and one N-bit PB for both upper and lower HiNAND sub-arrays. Thus, the silicon area is reduced and the preferred DRAM-like Charge-sharing sensing scheme and Recall to restore the programmed WL patterns can be executed more efficiently than 1-sided Static PB. The disadvantage is the metal2 broken GBL has to pass across the middle PB to reach the first set of Group D to Group 1 and the second set of Group D+1 to Group J in this HiNAND2 array.

FIG. **4**A is a simplified circuit diagram of a HiNAND2 array of FIG. **2**B performing Sample & Hold (S/H) functions of a Multiple-WL TLC Program operation according to a specific embodiment of the present invention. As an example, the HiNAND array has been divided into 8 Groups. Each Group large metal2 GBL capacitor (or GBL line) is divided into 8 Clusters of 4-Segment metal1 capacitors through 8 divided GBL transistor of MLBLp. Each broken Group metal2 line has eight 4-Segment metal1 capacitors connected in parallel. Each 4-Segment Cluster includes one Segment being assigned to be one Dynamic Page Buffer (PB) and three Segments being assigned to be

Dynamic Cache Registers. The assignments are preferably rotated among these 4 Segments. FIG. **4**A shows that the first Segment of Cluster **1** in the dispersed eight Groups is assigned to be one Dynamic PB but the next three Segments are assigned to be three corresponding Dynamic Cache Registers for storing one corresponding 3-bit TLC data. The S/H functions can be also applied to HiNAND1 as well with minor modifications but the description is skipped here.

In this example, N GBL columns are being divided into 8 broken Groups of 8 equally-segmented N-bit large metal2 capacitors, C_{GBL}, such as GBL_1[1] to GBL_1[N] in Group 1 and GBL_8[1] to GBL_8[N] in Group 8 through 7 N-bit divided GBL transistors, MGBL, with 7 gates tied to 7 respective signals of DIV_EN[1] to DIV_EN[7].

In other words, each Group's GBL metal2 line forms a metal2 capacitor, C_{GBL}, and is connected to 32 Segments with 32 lower-level metal1 capacitors C_{SEG}. Each Segment is termed as one Dynamic Register comprising one metal1 capacitor C_{SEG} in series with one Segment divided transistor MLBLp with its gate tied to a SEG signal in accordance with FIG. **2**B. Totally, there are 32 MLBLp transistors with their gates tied to 32 respective SEG_1 to SEG_32 per C_{GBL} per Group.

Each Group C_{GBL} is connected 32 Segments, thus 32 Dynamic Registers. The capacitance of each C_{GBL} is 32 times of each C_{SEG} in 2D HINAND array in this example. In other words, $C_{GBL}=32\times C_{SEG}$.

Referring to FIG. **4**A, in each Group, 4 out of 32 adjacent Dynamic Registers are formed as one TLC storage center with a preferred job Rotation Assignment as each 3-bit TLC data program operation is performed. In one TLC storage center, one of four metal1 C_{SEG} capacitors with a Cluster is circled and assigned to be a Dynamic PB for temporarily storing 1-bit of "0" of Program code or "1" of Program-Inhibit code. Three out of four C_{SEG} capacitors belonging to the same Cluster marked with dash-box are termed as 3-bit Dynamic Cache Registers for storing one 3-bit TLC programmed data in one physical NAND cell in one selected WL. The "0" of the programmed code is converted into 0V but "1" of the program-inhibit code is converted into a $V_{inhibit}$ voltage level as the storage charges stored in each C_{SEG} capacitor. In the HiNAND2 array of the present invention, the preferred $V_{inhibit}$ voltage is defined as $Vdd \leq V_{inhibit} < 10V$, and typically $V_{inhibit}=7V$. Similarly, 3-bit of each TLC data, data "0" is also being converted into 0V and data "1" is converted into the $V_{inhibit}$ voltage level as the storage charges stored in 3 respective C_{SEG} capacitors of 3 Dynamic Cache Registers marked with same dash-box.

The detailed biased voltages of all key control signals for 2D HiNAND array are set in accordance with the fourth step of multiple-WL and All-GBL simultaneous Program and Recall operations shown in FIG. **10**, FIG. **11**, FIG. **12**, and FIG. **13** of this specification. Table 3 below summarizes TLC Rotation assignment of four C_{SEG} capacitors. The first TLC Rotation assignment is shown in FIG. **4**A.

TABLE 3

	TLC Rotation assignment of 4 C_{SEG} capacitors			
	first C_{SEG} capacitor	second C_{SEG} capacitor	third C_{SEG} capacitor	fourth C_{SEG} capacitor
1st assignment	Dynamic PB	Dynamic Cache	Dynamic Cache	Dynamic Cache
2nd assignment	Dynamic Cache	Dynamic PB	Dynamic Cache	Dynamic Cache

TABLE 3-continued

	TLC Rotation assignment of 4 C_{SEG} capacitors			
	first C_{SEG} capacitor	second C_{SEG} capacitor	third C_{SEG} capacitor	fourth C_{SEG} capacitor
3rd assignment	Dynamic Cache	Dynamic Cache	Dynamic PB	Dynamic Cache
4th assignment	Dynamic Cache	Dynamic Cache	Dynamic Cache	Dynamic PB

For a MLC Recall and Program operation, then only three C_{SEG} capacitors are required for three Rotation assignments as summarized below in Table 4.

TABLE4

	MLC Rotation assignment of 3 C_{SEG} capacitors		
	first C_{SEG} capacitor	second C_{SEG} capacitor	third C_{SEG} capacitor
1st assignment	Dynamic PB	Dynamic Cache	Dynamic Cache
2nd assignment	Dynamic Cache	Dynamic PB	Dynamic Cache
3_{rd} assignment	Dynamic Cache	Dynamic Cache	Dynamic PB

For a SLC Recall and Program operation, then only two C_{SEG} capacitors are required for two Rotation assignments as summarized in Table 5 below.

TABLE 5

	SLC Rotation assignment of 2 C_{SEG} capacitors	
	first C_{SEG} capacitor	second C_{SEG} capacitor
1st assignment	Dynamic PB	Dynamic Cache
2nd assignment	Dynamic Cache	Dynamic PB

Referring again to FIG. **4**A, all Dynamic Cache Registers are rotationally assigned in only 3 C_{SEG} capacitors of Group 1 for superior restoring each TLC programmed data back to the 3-bit Static PB registers on top of HiNAND array. But all Dynamic PB Registers are also rotationally assigned to all selected WLs in all selected Groups. Note, each Segment Dynamic Data Register or Dynamic Cache are preferably made of metal1 LBL lines with C_{SEG} capacitors corresponding to respective Segments with one dedicated precharge transistor and precharge power line as seen from on enlarged figure with gate tied to SEG_32[2]. The precharged transistor is MBLs with gate tied to PRE and supply line is LBLps. Since the details have been explained in previous pages of this application, thus it is skipped here for simplicity of description.

FIG. **4**B is a simplified circuit diagram of a HiNAND2 array of FIG. **2**B performing Sample & Hold functions of a Multiple-WL TLC Program operation according to another specific embodiment of the present invention. As shown, the assignment of 4-Segment metal1 capacitors are rotated with the last Segment of Cluster **8** in the dispersed eight Groups being assigned to one Dynamic PB and the first three Segments of Cluster **8** being assigned to be three corresponding Dynamic Cache Registers for storing another one corresponding 3-TLC data. Note, all Dynamic Cache Registers are also rotationally assigned in only 3 C_{SEG} capacitors in Group 1 similar as FIG. **4**A.

In summary, both FIG. **4**A and FIG. **4**B show a first preferred option of Multiple-WL and All-GBL simultaneous Program operation being performed in only one selected Group, Group 1, not dispersed in eight Groups, Group 1 through Group 8. Similarly, all 8 WLs can be selected in any only one Group among Group 1 through Group 8. This can be referred as Consolidated Multiple-WL and All-BL simultaneous Program operation because the selected Multiple WLs are only from one selected Group.

FIG. **4**C is a simplified circuit diagram of a HiNAND2 array of FIG. **2**B performing Sample & Hold functions of a Multiple-WL TLC Program operation according to another specific embodiment of the present invention. As shown, the assignment of 4-Segment metal1 capacitors are rotated with the first Segment of all eight Clusters in Group 1 being assigned to one Dynamic PB and the next three Segments in each Cluster being assigned to be three corresponding Dynamic Cache Registers for storing another one corresponding 3-TLC data.

FIG. **4**D is a simplified circuit diagram of a HiNAND2 array of FIG. **2**B performing Sample & Hold functions of a Multiple-WL TLC Program operation according to another specific embodiment of the present invention. As shown, the assignment of 4-Segment metal1 capacitors are rotated with the first Segment of all eight Clusters in Group 8 being assigned to one Dynamic PB and the next three Segments in each Cluster being assigned to be three corresponding Dynamic Cache Registers for storing another one corresponding 3-TLC data.

FIG. **4**C is and FIG. **4**D show a second preferred option of Multiple-WL and All-GBL Simultaneous Program being performed in all 8 dispersed groups, Group 1 through Group 8. In other words, 8 program WLs are selected from Group 1 through Group 8 one WL per one Group, respectively and simultaneously. This can be referred as Dispersed Multiple-WL and All-BL Simultaneous Program operation because the selected Multiple WLs are dispersed in multiple selected Groups.

Note, when Group number is larger than the totally allowed selected multiple WLs, then only Multiple-WL out of all total Groups are selected for Multiple-WL and All-BL Program per each program pulse. The Multiple-WL Program will be continued and it will end until all desired WLs in HiNAND groups being programmed. The detailed description of FIG. **4**C and FIG. **4**D are skipped because their operations are substantially the same as FIG. **4**A and FIG. **4**B.

In summary, FIG. **4**A and FIG. **4**B show the first preferred Consolidated Multiple-WL and All-GBL simultaneous Program with different Rotation assignments, while FIG. **4**C and FIG. **4**D show the second preferred Dispersed Multiple-WL and All-GBL simultaneous Program. Alternatively, a mixed Consolidated and Dispersed of Multiple-WL and All-GBL simultaneous Program operations can be also implemented in the HiNAND array design but preferably keeping all Dynamic PBs in Group D and Group D+1 when a middle PB architecture is used as shown in FIG. **3**.

FIG. **5**A is a circuit diagram of 1-bit static PB circuit that comprises one Multiplier circuit, one 1-bit Sense Amplifier circuit and one 1-bit SLC Data Register, along with one Y-pass circuit, One Cache Register, one I/O Control and multiple I/O [1:X] pins for Multiple-WL and All-GBL Simultaneous SLC operations for both HiNAND1 and HiNAND2 arrays according to an embodiment of the present invention. As shown, the 1-bit SLC-static PB **500** includes one Multiplier **502**, one 1-bit SA **504**, and one 1-bit SLC Data-Register/PGM-Buffer **506** along with one Y-pass circuit **510**, One Cache Register **512**, one I/O Control **514**, and multiple I/O [1:X] pins **522** for J-WL and All-GBL Simultaneous SLC operations for both HiNAND1 and HiNAND2 arrays. Note, in this SLC circuit, Data-Register and PGM-Buffer are combined into one PB **500**. The Data-Registers used to store the stored voltages of each smaller C_{SEG} or each bigger C_{GBL} capacitors. In contrast, each bit of PGM-Buffer is used to store 1-bit Program and Program-Inhibit data pattern in DL from eternal I/O or from the stored C_{SEG} and C_{GBL} capacitors.

Furthermore, each SLC Data Register **506** includes one 1-bit Program Buffer and each SA **504** includes one DRAM-like SA with two inputs. One input is connected to Multiplier's amplified output signal OUTP and another input is connected to reference signal VREF.

The DRAM-like sense amplifier operations are like analog-to-digital convention with 2-cycle amplification steps such as Vdd clock and Vss clock. In particularly, the 1-bit Static PB **500** includes one Multiplier **502** associated with each GBL line for Multiple-WL and All-BL Read, Program-Verify, and Erase-Verify operations. The Multiplier **502** is used to amplify each detected GBL voltage V_{GBL} if it is smaller than 0.4V as developed at each of top GBL nodes of N GBL lines GBL_1[1] through GBL_1[N]. The amplified voltage signals then are respectively passed to N corresponding BLP nodes. The decision with or without including the Multiplier **502** between Latch-type SA **504** and GBL sensing node of the present HiNAND2 array is determined by the location of selected Group and signal voltage levels of the detected at GBL node.

As explained earlier in this description, the sensed voltage level from GBL_1[1] in top Group 1 and GBL_J[1] of bottom Group J after DRAM-like Charge-sharing effect will have different voltage dilutions if each GBL capacitance is equally divided in length. In the case of the equally-divided GBL capacitor, the Charge-sharing design is based on the farthest Group J which has the lowest Charge-sharing sensed voltage level due to all J GBL capacitances are counted into the dilution and will be used as the base line for implementing Multiplier worst-case amplification below.

The best-case Charge-sharing of GBL is Group 1 that has only one C_{GBL} capacitor, thus achieving the highest sensed GBL voltage V_{GBL} level without any dilution with the rest of J−1 GBL capacitors in J−1 Groups in each GBL column. As a result, Group 1 or even Group 2 in HiNAND array can be designed to send the highly sensed GBL voltage directly to the corresponding SA **504** bypassing the Multiplier **502**.

The input or the detecting node of Multiplier **502** is BLP node. One major advantage of this HiNAND2 design over conventional NAND design is the voltage control of BIAS signal, which is coupled to gate of a 20V HV long-channel NMOS transistor MN**6**, shown in FIG. **5**A. In prior-art NAND design, the BIAS signals have to be well controlled to be 2.3V to provide a stable 0.7V-1.0V GBL precharge-voltage due to its high Vt value. It also needs to provide another lower gate voltage for helping the discharge of GBL line and then provide another higher voltage to fully pass the Vdd to GBL line as Program-Inhibit voltage.

Since there is no need of GBL precharge in this HiNAND2 Read operation, a fine-tune 2.3V supply is not needed. Additionally, the discharge of each LBL line and its associated broken GBL line is nothing to do with BIAS. The BIAS signal is just Vdd, thus another HV voltage supply is not needed either. The only needed voltage is Vread=6V to allow the full Vdd=1.8V passage from GBL from upper Groups with higher diluted, sensed V_{GBL} voltages.

In one embodiment of this HiNAND design, the preferred high V_{GBL} voltage is between 1.8V and Vss from Group 1, between 0.9V and Vss from Group 2, between 0.6V and Vss from Group 3, between 0.45V and Vss from Group 4, and between another gradually decreased value of 0.1125V (1.8V/16=0.1125V when reading from Group 16 if 16 dispersed WLs in 16 dispersed Groups are selected) and Vss from Group 16. In worst case Read from Group J, the Multiplier **502** is required to amplify V_{GBL} to more than 0.4V at OUTP node for a reliable sensing via Latch-type DRAM-like SA **504**.

In another embodiment, the precharged C_{SEG} voltage is $V_{inhibit}$ which is set o be much higher than 1.8V. For example, if $V_{inhibit}$=Vdd, then V_{GBL} voltage is 0.1125V (1.8V/16=0.1125V) when reading from the Group 16 in worst case. If $V_{inhibit}$=7V, a bigger V_{GBL} voltage of ~0.4375V is sensed at BLP node. Thus, Multiplier is not needed at all.

Now, the Multiplier operation will be explained below in accordance with the circuit shown in FIG. **5**A. As shown, the input and output nodes of the Multiplier circuit **502** are denoted as BLP and OUTP respectively. As mentioned above, the need of a Multiplier circuit for the HiNAND is an option, all depending how many WLs can be selected for Read, Program-Verify and Erase-Verify operations. As a design thumb of rule, more WLs for simultaneous operations, then more the dilution of sensed V_{GBL} voltage so that Multiplier is more likely needed.

The amplified voltage at OUTP node is the outcome of the Multiplier **502** after N-cycle amplification operations on input voltage detected at BLP node. The amplification factor by the Multiplier is N, where N≥2 or any larger integer number, depending on the required minimum ΔV_{GBL} value and speed and area trade off for the reliable sensing of the DRAM-like SA **504** connected to the OUTP node.

Referring to FIG. **5**A, Multiplier **502** with a larger N for a larger V_{GBL} that will result in a larger silicon area and more sensing cycles of sample and hold on capacitors such as C[0]-C[N] are required. Practically, too many cycles of sample and hold operations on Multiplier's capacitor, C[N], to accomplish the final desired V_{GBL} is not preferable for this fast multiple-WL Read and Verify operations.

Every capacitor of C[0] through C[N−1] is connected to two NMOS LV pass transistors. All capacitors of C[0] through C[N−1] are connected in series from the top node of OUTP to the bottom node connected to IN[N]. The value of each capacitor of C[0] through C[N−1] can be made the same or different values. The type of capacitor is preferably made of poly1-poly2 and specially made metal capacitors without a Vt drop for a full coupling effect for this Multiplier's operation.

For example, the top (poly2) plate of the capacitor, C[1], is connected to two LV NMOS transistors. One transistor is MN[1] with its left input node connected to a common input node BLP, its gate is tied to T[1], and its right output node connected to IN[1]. The other LV NMOS transistor, TP[1], with its drain node connected to IN[1], its source node connected to Vss, and its gate tied to TP[1]. The bottom (poly1) plate of C[1] is connected to the top (poly2) plate of C[2] not explicitly shown in FIG. **5**A. The top common sensing line of BLP is connected to a pull-up 20V NMOS device of MN**6** with its gate tied to BIAS signal and its drain node is connected to each corresponding GBL, which is equivalent to be GBL_1[1:N] in HiNAND array.

Similarly, the top (poly2) plate of the last capacitor, C[N−1], is connected to another two similar LV NMOS transistors. One transistor is MN[N−1] with its left input node connected to a common input node BLP, its gate tied to T[N−1] and its right output node connected to IN[N−1]. The other LV NMOS transistor, TP[N−1] with its drain node connected to IN[N−1], its source node connected to Vss, and its gate tied to TP[N−1].

Similarly, the top plate of the first capacitor, C[0], is connected to another LV NMOS transistor MN[0] with its left input node connected to a common input node of BLP, its gate tied to T[0] and its right output node connected to OUTP of the Multiplier. The bottom plate of C[0] is connected to IN[1]. The Multiplier operation for amplifying input at BLP to OUTP is divided into 4 steps. Step 1: Setting BIAS=Vdd+Vt+V_{margin}(0.5V) to allow the full passage of sensed voltage at GBL node with PGM=Vss to shut off the program path. Step 2: First sampling the V_{GBL} voltage at BLP node and store it at C[0] capacitor by setting the following conditions, T[0]≥Vdd+Vt, T[1]= . . . =T[N]=0V, TP[1]=Vdd, and T3=0V. Step 3: Repeat second sampling till N samplings of V_{GBL} voltage at BLP node and store them to the respective capacitors of C[1] to C[N−1] one by one serially by setting the following conditions to boost the sensed voltage at OUTP node: T[0]=0V, T[1]≥Vdd+Vt, TP[1]=0V, TP[2]=Vdd, TP[2]=0V, and T3=0V. Step 4: One-shot T3 clock to latch the final sensed GBL voltage at Q[i] node of SA **504** and one VREF voltage at the opposite node of QB[i] of SA **504** for NAND cell data evaluation. It needs T5 clock to further amplify the ΔV between Q[i] and QB[i] nodes.

The fully developed digital signal will be coupled to the gates of two NMOS MN**10** and MN**11** transistors of the corresponding Program-Buffer **506**. And later the sensed data will be transferred to each corresponding Latch (INV0 and INV1) of each Program Buffer **506**.

For 1-bit Static PB shown in FIG. **5**A, it contains one 1-bit Multiplier **502**, one 1-bit SA **504**, one 1-bit Data Register **506** that further comprises one 1-bit static Program Buffer **550** and one 1-bit static Data Buffer **540**. The 1-bit Static PB can only store 1-bit of sensed data at a time from HiNAND array or 1-bit desired programmed from I/O Control circuit **514**.

The detailed operations of Data Buffer **550** and Data Buffer **240** in FIG. **5**A are illustrated below in accordance with the preferred Multiple-WL and All-GBL SLC operations.

SLC Data Buffer (DB) **550** includes one Data Latch (DL) made of INV0 and INV1 with one pair of D**1** and D**1**B nodes. Referring to FIG. **5**A again, to set and reset this DL, following bias conditions can be applied to: a) VFY with one-shot pulse when Q[i]=Vdd to set D**1**=Vdd, where Q[i] is one of the input node of SA **504**; b) RW_RES with one-shot pulse to set D**1**=Vdd; c) RWT_BK with one-shot pulse to set D**1**=Vss; d) LATP with one-shot pulse when Q[i]=Vdd to set D**1**=Vdd, where Q[i] is one of the input node of SA; e) one-shot data loading when conditions of LOAD=Vdd or Vread and Q[i]=LATP=RECALL=RW_RES=Vss.

The 1-bit data is sequentially loaded in corresponding one bit of DL in SLC Data Register **506** from I/O Control circuit **514** through Y-pass circuit **510**. Additionally, prior to data-in loading, one-shot of RW_RES to set all D**1**=Vdd is required.

The final data in DL is subject to each loading data bit from I/O. The D**1** is kept to initial Vdd if the corresponding loaded data bit is "1" and D**1** is set to Vss if the loaded data bit is "0."

SLC data loading cycle of Multiple-WL Program operation is further illustrated below by referring to FIG. **5**A. During the data-in loading, the required voltage polarity at

GBL node is identical to D1 node. If the data-in D1=1, that means the cell should be performed Program-Inhibit scheme to keep at E-state, thus V_{GBL}=Vdd or Vdd-Vt. But when data-in D1=0, that means the NAND cell should be programmed toward an A-state. As a result, the corresponding V_{GBL}=0V.

The 1-bit of the Program and Program-Inhibit data pattern per one WL is sequentially supplied to each DL with PGM=Vss. The data loading is performed sequentially in unit of Byte of 8 I/Os or words if 16 I/Os per system clock along with the increment of Y-pass counter to select the right 8 GBLs per one system clock. For one largest physical WL size of 128 KB of NAND today with 8 I/Os, it will take total 128K system clocks just to complete one whole SLC data for one single whole physical WL.

Unlike conventional 1-WL Program, this preferred Multiple-WL Program needs to quickly transfer one whole WL N-bit data to on-chip N-bit C_{SEG} capacitors once one whole WL data loading is completed. This N-bit DL loading to N-bit corresponding C_{SEG} capacitors or Dynamic Cache Registers at the designated areas in Group 1 can be done by one-shot pulse PGM clock (PGM≥Vdd) applied on the gates of N MN**20** transistors with enough time elapse associated with the right address logic to select the corresponding Dynamic Cache Registers. In this case, V_{BIAS}≥Vdd.

The program-data loading is to connect D1P to GBL through BLP. An INV2 is needed to prevent each DL's data D1 from being corrupted when a highly low capacitive node of D1 is connected to a highly capacitive node of corresponding GBL and BLP.

For a case of 16-WL and All-BL simultaneous Program operation with a largest 128 KB per WL size, then totally 16×128K=2,048K system clocks are required to complete 16 WLs data transferring from I/Os to the detonated C_{SEG} capacitors in preferred Group 1 in accordance with FIGS. **4**A-**4**D. For example, DDR2-NAND with 5 ns clock cycle has two loadings, then total 2,048K clock cycles will take 5,120 ms roughly.

Therefore, Multiple-WL Program data loading is serially performed from I/Os to the selected N-bit C_{SEG} capacitors through N-bit SLC Data Register and right address selection of the corresponding multiple N-bit C_{SEG} Dynamic Cache Registers.

Multiple-WL SLC Program-Verify operation can be also illustrated by referring to FIG. **5**A. The is an iterative data-out operation from one selected WL at a time but the data and voltage polarity is opposite between D1 node and GBL node. For example, if GBL node is at 0V, that means the verified cell passing the Program-Verify, thus it should be prevented from the subsequent program pulses. Thus D1 is set to Vdd, thus D1P=Vdd, and BLP=GBL≥Vdd-Vt to inhibit program. Conversely, if the verified V_{GBL}=Vdd, thus the cells' Vt not passing the verified Vt with R1=0V for a SLC verification. Thus the D1B is set to Vdd but D1P=Vss, thus GBL is reset to Vss. The cells will get programmed.

This Program-Verify operation needs one full-cycle like Read operation to precharge all selected C_{SEG} or C_{GBL} capacitors with a $V_{inhibit}$ voltage level initially and then discharged to Vss level or retaining the precharged $V_{inhibit}$ level. The final settled voltage patterns on C_{SEG} or C_{GBL} capacitors will be sensed and amplified by Multiplier **502** and SA **504**. The details should be same as previous HiNAND Read operation. During this multiple-WL Program-Verify cycle, the following bias conditions with LATP=RECALL=RW_RES=PGM=RW_RES=Vss are set to prevent the leakages from happening on two nodes D1 and D1B of each DL.

Similarly during the Recall cycle, all N DIs are reset to D1=0V prior to Recall operation. Referring to FIG. **5**A again, the Recall is performed to sense the stored voltages at C_{SEG} capacitors in Group 1. Thus, this operation is not intended to read any NAND cells in any WLs. This operation is to sense the stored voltage in smaller N C_{SEG} capacitors or larger N C_{GBL} capacitors in the corresponding Dynamic Cache Registers per row and then restore into the Static Data Buffers in PB. As a result, the restored voltage back to D1 should be same phase as the voltage at GBL. In other words, if V_{GBL}=0V, then D1=0V, then D1=0V to remain its initial state. If V_{GBL}=high and is amplified to a full Vdd at Q[1] node of SA **504**, then D1 is reset to Vdd by applying one-shot of VFY signal to the gate of transistor MN**17** to set D1B to Vss. Thus the stored program data patterns are successfully restored back into N Data Registers **506**.

FIG. **5**B is a circuit diagram of multi-bit static PB circuit for HiNAND array that allows to store e-bit NAND multiple-state page data for Multiple-WL and All-BL Simultaneous (MLC, TLC, XLC, . . .) operations according to an embodiment of the present invention. As shown, the multiple-bit static PB **600** includes one Multiplier **602**, one multi-bit SA **604**, and one Data-Register **606** along with one Y-pass circuit **610**, One Cache Register **612**, one I/O Control **614**, and multiple I/O [1:X] pins **622** for J-WL and All-GBL Simultaneous SLC operations for both HiNAND1 and HiNAND2 arrays. The Data-Register **606** includes one e-bit Matching logic circuit **630**, one independent eData-Register, **340**, and one shared Program-Buffer **650**. For a MLC Program, e=2, for a TLC Program, e=3 and for a XLC Program, then e=4. The e-bit Matching circuit, **630**, is added to the multiple-bit static PB **600** for this Multiple-WL and All-BL simultaneous Program operation. Additionally, an on-chip Code-generator circuit **608** is added to the multiple-bit static PB **600**. It generates e outputs of CODE1 to CODEe. For example, e=4 for 4 MLC codes from 00 to 11, e=8 for 8 TLC codes from 000 to 111, and e=16 for 16 XLC codes from 0000 to 1111. The codes can be easily generated from an on-chip State-machine.

Basically, the detailed operations of Multiplier circuit **602** and SA circuit **604** in FIG. **5**B are identical to the counterparts of Multiplier **502** and SA **504** in FIG. **5**A, thus the descriptions are skipped here for simplicity. The control of LATP signal in FIG. **5**A has been replaced by a reversed signal LAT to set the opposite leg of one latch made of INV2 and INV3 in Data-Buffer **640** in FIG. **5**B as oppose to latch made of INV0 and INV1 in FIG. **5**A.

Referring to FIG. **5**B, similarly, the major function of Program-Buffer is to generate and store the Program and Program-Inhibit MLC/TLC/XLC data patterns. When the read NAND MLC/TLC/XLC data matches the stored MCL/TLC/XLC data, then MTACH node is Vdd to turn on MN**23** with a condition of setting I[i] and VFY to Vdd so that Q0B node is at Vss and BLP at Vdd to send the Vdd-Vt MLC program-inhibit voltage to the corresponding GBL lines to prevent MLC over-program.

Prior to Multiple-WL simultaneous Program, one-shot of RW_RES is applied to the gate of MN**13** to set D1B node to Vss but D1 node to Vdd to allow an easier loading into DA made of INV2 and INV3 in Data-Buffer **340** of each data-in bit from 320 bus from I/O Control **614**.

Basically, Multiple-WL and All-BL Read and Program-Verify operations of the present invention is more powerful and more flexible to allow both Read and Program-Verify performed simultaneously on more than one selected WLs from more than one selected Segments from more than one

Groups of the HiNAND. But there is only one N-bit PB connected to N×C_{GBL}. The single PB and N C_{GBL} capacitors are designed to be shared by all selected WLs in the HiNAND array. This HiNAND2 with one N-bit PB is referred as HiNAND2-1PB-N scheme.

In an embodiment, the above Multiple-WL & All-GBL Read and Program-Verify operations are based on a evenly divided HiNAND2 array with 16 or less NAND Groups. In addition, the layout of a N-bit PB is being placed on top of HiNAND2 array with Group 1 at top and Group 16 at the bottom and Group 2 to Group 15 placed in between in the gradually increasing order from top to the bottom. All N broken metal2 GBLs in 16 Groups are laid out in such a way with N outputs connected to the top N-bit PB. Group 1 is the HiNAND group that is closest to the PB. When reading any single WL from Group 1 to the PB, it experiences the fastest and smaller RC delay of one C_{GBL} with zero M_{GBL} resistor. Conversely, when reading any page or WL from the bottom Group 16, it suffers longest RC delay of 16 C_{GBL} capacitors and 15 M_{GBL} resistors. As a result for this preferred Multiple-WL and All-GBL scheme, the total broken GBL RC delays from the fastest Group 1 to the slowest Group 16 varies widely due to the widely uneven RC charge-sharing nature in above HiNAND2 array layout arrangement that has one full N-bit PB placed in top end of HiNAND2 array. This is named as a HiNAND2-1PB-N scheme.

In an alternative embodiment, a HiNAND2-2PB-N scheme has two identical N-bit PBs with top N-bit PB being connected to the first N-bit GBL_1 capacitors of Group 1 and bottom N-bit PB being connected to the last N-bit GBL 16 capacitors of Group 16. In between, there are 14 broken capacitors such as N-bit GBL_2 to N-bit GBL__ 15 as explained in previous HiNAND2-1PB-N scheme with only one N-bit PB placed on the top. Other control signals such as LBLps lines, CSL lines, PRE lines and DIV-EN lines and SEG lines, the numbers of MLBLp and MLBLs transistors remain the same without changes.

In this novel HiNAND architecture with two N-bit PBs, the Group 16 RC delay read by the bottom N-bit PB will be same as the Group 1 read by top N-bit PB in 1-cycle All-GBL Read as explained above. The N-bit different data can be stored separately in both top and bottom N-bit PBs. As a result, the slowest read latency happens on the Group 8 and Group 9. In this architecture, more evenly RC delay and power consumption is being achieved for this more powerful Multiple-WL and All-BL read and program scheme.

In another alternative embodiment, a HiNAND2-2PB-N/2 scheme has two identical N/2-bit PBs with one top N/2-bit PB being connected to the first N/2-bit Odd/Even GBL_1 capacitors of Group 1 and the bottom N/2-bit PB being connected to the last N/2-bit Even/Odd GBL_16 capacitors of Group 16. In between, there are similar 14 broken capacitors such as N-bit GBL_1 to N-bit GBL_15 as explained in previous HiNAND2 array with only one N-bit PB placed on the top. Other control signals such as LBLps lines, CSL lines, PRE lines and DIV-EN lines and SEG lines, the numbers of MLBLp and MLBLs transistors are not changed.

In this novel HiNAND architecture with two N/2-bit PBs, the Group 16 RC delay read by the bottom N/2-bit PB will be same as the Group 1 read by top N/2-bit PB but in 2-cycle of ½-GBL read from same side of N/2-PB as explained above. As a result, the slowest All-GBL read latency still happens on the Group 8 and Group 9. In this new architecture, it is preferred to read one selected full WL page data from one end of PB because the true bottleneck of delay of reading one full WL is not the 2-cycle or 1-cycle of charge-sharing delay. The different delay of 1-cycle and 2-cycle of charge-sharing is less than 200 ns, which is negligible.

The bottlenecks of read delays are C_{SEG} and C_{GBL} charge and Discharge delays of one full page or physical WL. For HiNAND2-2PB-N, HiNAND2-2PB-N/2, and HiNAND2-1PB-N scheme the data-pattern trapped in the selected Blocks and determined by the corresponding PB is almost same, regardless of one PB or two PB. Note, although one-side N-bit PB is being divided into two-side two N/2-bit PBs, the charge and discharge operations are still performed in one full physical WL or page of all above HiNAND2 arrays.

As a result more evenly and flexible read latency arrangement and power consumption can be achieved for this more powerful Multiple-WL and All-BL HiNAND Read and Program scheme.

In yet another alternative embodiment, simultaneous reading Multiple-WL and All-GBL data from one selected Block per Segment of multiple Segments within one NAND Group, particularly in top Group 1 or bottom Group 16 for the structures of HiNAND2-1PB-N, HiNAND2-2PB-N/2, and HiNAND2-2PB-N scheme, are illustrated below in accordance with the circuit shown in an embodiment of HiNAND2 array shown in FIG. **2**B.

In a specific embodiment, the eight steps of Read operation described in earlier sections of the specification in accordance with FIG. **8** and FIG. **9** are still applicable to the HiNAND2-1PB-N Multiple-WL and All-BL Read scheme based on Group 1 of HiNAND2 array circuit shown in FIG. **2**B with n=1. In the embodiment, the HiNAND2-1PB-N scheme includes a) Total L Segments in Group 1, thus L C_{SEG} capacitors such as LBL_1_1 to LBL_1_L; b) K Blocks for each of the L Segments; c) Capacitance ratio of C_{SEG}/C_{GBL} of about 1/16 to read one selected WL data in one of the Segment in Group 1 which is kept the same as the ratio arrangement to read one selected WL-data from Group 16 to the top PB for using a same amplification factor of the same Multiplier; and d) The reduced precharge current because only one C_{SEG} per Segment needs to be precharged for this Multiple-WL and All-GBL Read operation. Total L C_{LBL} capacitors associated with L Segments need to be simultaneously precharged for this simultaneous Multiple-WL and All-GBL Read operation within Group 1. L C_{SEG} capacitors includes LBL_1_1[1] to LBL_1_1[N] for Segment 1 to LBL_1_L[1] to LBL_1_L[N] for Segment L.

The first step of multiple-WL and All-GBL Read from Group 1 only is to simultaneously predischarge the voltages of all C_{SEG} capacitors in Segment 1 such as LBL_1_1[1] to LBL_1_1[N] to all C_{SEG} capacitors in Segment L such as LBL_1_L[1] to LBL_1_L[N] respectively through LBLps_1[1] to LBLps_1[L] lines simultaneously and separately in L Segments of Group 1 by setting the following biased conditions: a) PRE_1[1]= . . . =PRE_1[L]=Vd; b) LBLps_1[1]= . . . =LBLps_1[L]=Vss; c) SEG_1[1]=Vdd but SEG_1[2]= . . . =SEG_1[L]=Vss to predischarge N GBL_1 to Vss; and d) DIV_EN[1]=Vss.

Note, setting SEG_1[2] to SEG_1[L]=Vdd can also help pre-discharge C_{GBL} faster but would require more power consumption. It is preferred to use only one LBLps to discharge C_{GBL} in Group 1 by turning on one SEG_1[1]=Vdd but keeps the rest of SEG_1[2]= . . . =SEG_1[L]=Vss. Setting) DIV_EN[1]=Vss is to isolate all capacitors of GBL_2[1] to GBL_2[N] in Group 2 from the discharging capacitors of GBL_1[1] to GBL_1[N] in Group 1. Other groups from Group 2 to Group 16 are at don't-care

state during this Group 1 Read operation. This pre-discharge step can be completed within 100 ns. Thus this step is not the bottleneck of this preferred Read operation.

The second step of multiple-WL and All-GBL Read from Group 1 only is to precharge all N selected local C_{SEG} capacitors per one Segment such as LBL_1_1[1] to LBL_1_1[N] in Segment 1 to LBL_1_L[1] to LBL_1_L[N] in Segment L simultaneously. The precharged voltage is preferably set to be Vdd (1.8V) by setting the following bias conditions: a) PRE_1[1]= . . . =PRE_1[L]=Vread=6V in one-shot pulse; b) LBLps_1[1]= . . . =LBLps_1[L]=Vdd=1.8V; c) SEG_1[1]=SEG_1[2]= . . . =SEG_1[L]=Vss; d) SSL[1]=Vdd and GSL[1]=Vss to prevent leakage to respective LBLps_1[1] to LBLps_1[L/2]; e) WL(selected)=V_R, but WLs(unselected)=Vread=6V; and f) DIV_EN[1]=Vss to isolate the capacitors of GBL_2[1] to GBL_2[N] in Group 2 from the discharging capacitors of GBL_1[1] to GBL_1[N] in Group 1. Other groups from Group 2 to Group 16 are at don't-care states during this Group 1 Read. This precharge step can be completed within 100 ns. Thus this step is not the bottleneck either of this preferred Read operation.

Now, the preferred precharge happens only on N shorter LBL metal1 lines within Group 1 not including N C_{SEG} capacitors in other Groups so that only 1/J of broken C_{GBL} capacitance is subjected to the precharging not the total C_{GBL} capacitance from all Groups as shown in previous Read operation (see FIG. **9** based on FIG. **2**B). Thus the precharge step in the Multiple-WL and All-GBL Read from Group 1 or Group 2 consumes much less power but with much faster speed.

In order to make sure the number of Segments to be flexibly selected for Read in multiple Groups, one latch circuit per one Segment needs to be implemented in each Group.

In addition to precharge the selected LBL capacitors, similarly the selected in the selected Segments in Group 1 are also preferably precharged to V_R WL Read voltage and the unselected WLs are applied to a Vread voltage simultaneously to save total time delay of this second 1-cycle Multiple-WL and All-GBL Read operation. The Vread voltage typically is set to be around 6V. The Vread voltage for unselected WLs is called a pass voltage.

As a result, the precharge time of the selected C_{SEG} and C_{GBL} can be completed within 100 ns, which is very fast. But charging the pass voltage time for unselected WLs is much longer of few micro-seconds, thus in this BL and WL precharge cycle period, the delay in charging the pass voltage to unselected WLs is one of the key bottleneck.

The third step of multiple-WL and All-GBL Read from Group 1 only is to discharge the C_{SEG} capacitors on one or more selected WLs=V_R. The voltages of all local trapped N C_{SEG} capacitors are simultaneously either discharged to Vss or retained at 1.8V fully determined by the stored page data in one selected WL per Segment in Group 1.

For example, for a SLC Read, then the selected WL is set to V_R=0V, and 63 non-selected WLs are set to Vpass=6V. GSL[1]=Vread but SSL=Vdd. Part of the N C_{SEG} capacitors start to discharge from initial 1.8V to Vss within a predetermined discharge time if the corresponding NAND cell Vt=Vte<−0.7V, which is E-state. The remaining part of the N C_{SEG} capacitors retain its initial precharged voltage of 1.8V if the corresponding NAND cells Vt>0, which is A-state.

Thus, after above steps of the Multiple-WL & All-BL Read operation of this HiNAND2 array, the selected Segments' LBL lines and the selected Groups' broken GBL lines will trap respective either Vss or 1.8V voltages in accordance with the stored NAND data pattern on the selected WL of the selected Block in the selected Segment in the selected Group (Group 1) of this HiNAND array. After J-WL & All-BL Read, either 1.8V or Vss will be stored isolately or separately in all N×LBL_1 to N×LBL_J capacitors in accordance with the stored data in multiple WLs when all DIV_EN[1]= . . . =DIV_EN[J−1]=Vss. Note the discharge time of each smaller C_{SEG} capacitor is about J-fold (e.g, J=16) faster than to discharge each bigger C_{GBL} capacitor performed in a Read operation with the same 64-NAND cell string (see FIG. **9** in association with FIG. **2**B).

The fourth step of multiple-WL and All-GBL Read from Group 1 only is to perform a charge-sharing cycle between each C_{SEG} capacitor and each C_{GBL} capacitor in Group 1 for the multiple-WL & All-GBL Read operation.

In order to avoid data contention in each C_{SEG} and each C_{GBL}, the data in each C_{SEG} will be transferred to the common C_{GBL} one by one from different Segments in Group 1. As well arranged above, the capacitance ratio C_{SEG}/C_{GBL}<1/16, thus the amplification of Multiplier can be kept the same as previous read from all Groups. The details would be skipped here for description simplicity.

In this case the charge-sharing of different Segments with one common C_{GBL} is fully random in nature. Since charge-sharing takes a very short time, thus this step is not the bottleneck of this preferred Multiple-WL and All-GBL Read operation from the same Group 1. The rest steps of multiple-WL and All-GBL Read from Group 1 only are substantially the same as ones shown in FIG. **8** and FIG. **9** for reading multiple WLs from Multiple Groups, thus the detailed descriptions are also skipped here for simplicity.

Note, the above two kinds of Multiple-WL and All-GBL Read operations show the first example is to read multiple WLs from Multiple Groups and the second example is to show to read multiple-WL from Group 1 for HiNAND2-1PB and from Group 16 as well as for HiNAND2-2PB-N or HiNAND2-2PB-N/2, etc.

Other combinations of Multiple-WL and All-GBL Read operations are possible. For example, read Multiple WLs from all Groups along with read Multiple WLs from Group 1 and Group 2 and even from Group 2 and Group 15 as well by properly arranging the capacitance ratio of C_{SEG}/C_{GBL}. All above mentioned or non-mentioned Multiple-WL and All-GBL read should be all covered by this invention without a limitation, regardless of 2D or 3D NAND flash.

In operating the Multiple-WL and All-BL Read, the storages differences would make the read flow different. In an example of Multiple-WL and All-BL SLC Read, each WL stores the SLC 2-state data. Therefore, all selected Blocks are applied with same set of biased voltages for one selected WL=0V and 63 unselected WLs=Vread, SSL=Vdd and GSL=Vdd. As a result, the discharge of precharged 1.8V or higher $V_{inhibit}$ voltage are performed simultaneously on all the selected WLs in the selected Blocks in same selected Segments in different Groups or in the selected Blocks in different Segments but same Group 1 or Group 16.

Since the selected LBL capacitors of the selected Segments are either discharged or retain precharged charges simultaneously by the selected WL, the read data of selected multiple WLs will be ready at the same time and the data patterns are stored in the corresponding C_{SEG} capacitors. Later, each WL's C_{SEG} data is serially loaded from the selected Blocks into each corresponding Cache memories of the PB.

In an example, the PB preferably has at least 2 rows of N-bit Cache memories, Cache1 and Cache2, to allow proper

handling of reading J-WL data (J=16) either from same Segments of 16 different Groups or from 16 different Segments within a same Group. The two Cache memories are preferably operating in pipe-line manner and are controlled by on-chip State-machine.

The N-bit Cache1 memory is directly connected to the outputs of a N-bit SA. The inputs of the N-bit Cache2 are connected to the outputs of the N-bit of Cache1. After the completion of simultaneous discharging operations of 16-WL read, any one of the 16-WL can be selected to be transferred to the Cache1. Once the loading of a first WL data is completed, the second WL data is transferred to Cache1 by the rising-edge of clock, but the contents of the first WL data is transferred to from cache1 to Cache2 by a falling-edge of a clock to avoid the data contention.

Thus, total 16-WL and All-GBL SLC data can be sequentially read out one by one into Cache1 and then sent to I/O to the off-chip Flash controller through Cache2 in a fast pipeline fashion with only requirement of a small PB size. The number J of WLs being associated with a simultaneous Multi-WL Read and number K of WLs being associated with a simultaneous Multi-WL Program can be different. For a Read charge-sharing concern, the J is kept ≤16 but K can be larger than J because multiple-WL simultaneous Program do not have charge-sharing steps. Thus the thumb of rule in HiNAND2 array is K>J. K even can be set to be like K=2×J or 4×J, etc.

In an example of Multiple-WL and All-BL 4-state MLC for 16 WLs simultaneous Read, there are one erased-state of E state and three programmed states of A, B and C with the stored Vt values, Verify values, and Reference values in accordance with the drawings shown in FIG. **1**C. The similar approach can be extended into 8-state TLC and 16-state XLC Read.

The SLC Read is like the R**1** Read (see FIG. **1**C), which V_{R1}=0V is applied to the all 16 selected WLs. The E-state data of 16 WLs are ready and stored on each corresponding broken C_{GBL} capacitance and C_{SEG} capacitance if 16 WLs are located in 16 different Groups. Now, the reading of these 16 WLs will be performed sequentially from Group 1 to Group 16 if HiNAND2-1PB-N is used.

In one option, the first-WL data in Group 1 is transferred to the N-bit Cache1. Then, the same location (WL address) of the second-WL in different Segment is also read out and transferred to same PB buffer with the first-WL data being transferred to Cache2. All the subsequent 14 WLs' data would be serially transferred to Cache1 in pipeline manner during the previous WL data being transmitted to I/O. Thus, after 16 clocks, total 16 SLC data are being transferred to Flash controller for subsequence calculation of MLC.

Next, a higher V_{R2} is applied to all 16 WLs for data evaluation to get A-state data (see FIG. **1**C). Again, 16 WLs of A-state data would be serially sent out to Flash controller for subsequent MLC data calculation. Before sending out these 16-WL data, a 4-bit divided-by-2 D-Flipflop can be used to encode these 16 data per 16 WLs. Any 0-data being sensed in each State will clock the state-advance of this 4-bit Flipflop. Any 1-data would not clock into the next level. As a result, the 16-WL data per State can be converted into 4-bit MLC data. Thus, only 4×16=64 clocks as the conventional MLC Read of 16-WL data can be achieved.

In another embodiment, this Multiple-WL and All-GBL SLC Read operation can be extended into preferred Multiple-WL and All-GBL Program and Program-Verify operations under the same HiNAND2 array circuit. Before performing any HiNAND2 Program operation, the flash cells have to be erased to a negative E-state first. In prior art, the Erase operation is performed in unit of a Block. The Block size can be 1 Mb up to 4 Mb, depending on the specs and applications. And the typical Block erase time ranges from 2 ms to 5 ms.

A typical Block includes 64 NAND-cell Strings. That means a String of a Block is comprised of 64 WLs. The Block Erase operation is simultaneously performed on all 64 WLs by grounding all 64 WLs such as V_{WL1}=V_{WL2}=. . . =V_{WL64} to Vss with a common TPW being set to 20V. All these 64 WLs are in the one physical String and one physical Block. It is referred as Consolidated Block.

But to simultaneously program these 64 WLs in a Consolidated Block with a size of 8 KB per WL in one physical Block like above Erase operation is totally impossible under the conventional NAND architecture in the past 25 years.

Unlike the conventional NAND with Consolidated Blocks, these 64 WLs are preferably dispersed in 64 different Blocks as one WL per Block with a same cell-String location within the preferred HiNAND2 array architecture. This kind of Block is referred as Dispersed Block of the present invention. Accordingly, the conventional 64-WL Erase operation in one physically Consolidated Block is preferably changed to simultaneously erase 1-WL per Dispersed Block within a scheme of 64-WL in 64 physical Blocks. As a result, both Erase and Program operations can be preferably performed on 1-WL per Block basis but simultaneously on 64 WLs respectively in 64 Blocks. Therefore, a 64-fold program-time reduction for one physical page can be achieved with this Dispersed-Block structure.

An embodiment of the present invention using higher $V_{inhibit}$ voltage to replace Vdd in a non-SBPI method is also adopted here for achieve a superior program-inhibit (PI) function but along with a new set of WL biased conditions. The reason of using $V_{inhibit}$ voltage and Vss for Program-Inhibit and Program is to get a higher initial Inhibit voltage of Vpass-Vt in the NAND channels of unselected programmed cells. The conventional SBPI method uses Vdd as low as 1.8V. The $V_{inhibit}$~7V would have about 5.2V higher initial voltage at the unselected LBL lines, which is passed to the flash channels of unselected programmed cells. By applying Vpass=10V to those unselected WLs with corresponding NAND cells at the highest programmed Vt=5V (For state C in MLC cell), the NAND channel' voltage is about 10V−5V=5V, which is still much higher than Vdd prior to ramping the selected WL's gate to Vpgm of 20V. Additionally, this preferred Program scheme allows for one random-WL program per Dispersed Block, thus all NAND cells in any WLs can be selected for Program along with the remaining WLs with proper biased voltages (see Table 6 below).

Due to WL-WL coupling effect, the channel voltage of unselected program cells can still be boosted from initial 5V to about 10V. Thus, the final channel PI voltage is much higher than conventional NAND to have a superior PI performance. For example, it is much less affected by, at the worst-case scenario, 0V channels presented on both adjacent BLs of a programmed cell.

Again, referring to FIG. **2**B, as the $V_{inhibit}$ voltage is coupled from only one selected LBLps power line through the selected N MLBLs and N MS transistors by setting gate signals of PRE=SSL to $V_{inhibit}$+Vdd+ΔV_{margin} and setting NAND cells' gate to Vpass=10V on the unprogrammed WLn+1 (up to WL64) to reach the NAND cells' channels in the selected WLn. Note: the order of WLs are defined from the String top to bottom such as WL1, WL2, WLn−1, WLn, WLn+1, WL63, WL64 for a 64-cell NAND String. The

selected WL is denoted as WLn. The unprogrammed WLs are WLn+1 up to WL64 and the programmed WLs are from WL1 to WLn−1.

TABLE 6

HiNAND2 operation	WL_1	WL_{n-2}	WL_{n-1}	WL_n	WL_{n+1}	WL_{64}	TPW	Block #	LBL Select	LBL unselect
WL Program voltage	Vdd	Vdd	V_{pass}	V_{pgm}	V_{pass}	V_{pass}	0 V	1-64	0 V	7 V
WL Erase voltage	F	F	F	0 V	F	F	20 V	1-64	F	F
WL Read voltage	V_{read}	V_{read}	V_{read}	V_R	V_{read}	V_{read}	0 V	1-64	1.8 V	0 V

Note:
Vread = 6 V,
Vpgm = 15 V-25 V,
Vpass = 10 V,
F = Floating,
V_R = Read WL MLC voltages.

In addition, all SEG, PRE, SSL, GSL, CSL, LBLps, DIV_EN[J] are left at floating to avoid the gate-oxide breakdown due to the common bulk of TPW=20V. All NMOS select transistors (which are made of same devices) MLBLp, MS, MG, and MLBLs are configured to sustain the preferred PI operation with higher $V_{inhibit}$ voltage.

In the conventional NAND array architecture, if $V_{inhibit}$ voltage is coupled directly from GBL lines, the program-inhibit current consumption is too high. But in this preferred 2-level BL-Hierarchical HiNAND2 structure, the $V_{inhibit}$ voltage is generated from a central $V_{inhibit}$ pump circuit and is only coupled to 16 selected LBLps horizontal power lines on a basis of one LBLps line per Dispersed Block. Thus, the capacitances of these 16 LBLps lines are much smaller so that the power consumption to couple the $V_{inhibit}$ voltage to NAND cell channels is drastically reduced as compared to the required high current consumed in each long and heavy GBL capacitor when using Vdd in PI operation.

The program Vpass gate-disturbances in the selected String for either the case of using Consolidated Block or the case of using Dispersed Block are the same. Therefore, the advantage of low-power consumption of using $V_{inhibit}$ scheme for simultaneous Multiple-WL and All-GBL Program and Erase operations is not achieved at the expense of NAND memory reliability, power, and silicon area.

Two embodiments of Block Erase in this HiNAND2 array are illustrated below. In a specific embodiment, total 64 WLs are arranged in one HiNAND2 physical Consolidated-Block so that the Erase operation is executed in unit of 64 WLs in one physical Consolidated-Block simultaneously but the Program operation can only be performed in 1-WL per Block base. The saving of WL Program cannot be benefited from this scheme.

In another specific embodiment, total 64 WLs are arranged in 64 HiNAND2 Dispersed-Blocks so that both the Erase operation and the Program operation can be executed in unit of 64 WLs simultaneously in the Dispersed-Block scheme, resulting in a big saving in Block's program and read time.

In this HiAND2 Program operation, there are at least two preferred PI schemes: Case1) using Vdd as an $V_{inhibit}$ coupled from N long broken GBL lines and PB and Case2) using 7V as $V_{inhibit}$ coupled from N short LBL lines and only 16 LBLps lines coupled from one $V_{inhibit}$ pump circuit. The values of N can be 8 KB=8,192 or 16 KB=16,384 for one physical page or WL in HiNAND2 (same as conventional NAND) array.

Case1: Each WL data of Vss-program and Vdd-inhibit voltages are coupled directly from a N-bit PB to one selected N-bit Block at a time. These Vss and Vdd voltages are passed to the selected channels through N selected broken GBLs, through N selected MLBLp transistors in on-state to N broken LBL lines and then to N Selected NAND Strings through N first String-select transistors MS in on-state and N second String-select transistor MG in off-state to prevent the String leakage. All this Vdd-inhibit and Vss programmed voltages are then latched or trapped in the selected N C_{SEG} capacitors in the selected Segment and Group in accordance with the WL data stored in the N-bit PB. After this medium C_{SEG} capacitors are precharged with one-shot of Vdd-inhibit and Vss, the N gates of LBL-select transistors MLBLp are then being shut off by setting SEG signal to Vss to trap Vdd-inhibit and Vss. This precharged process takes time less than 200 ns to 3 μs, depending on the Block location or distance of the selected broken C_{GBL} from the PB.

After the first trapping of Vdd-inhibit voltage in the first C_{SEG} capacitor of the first selected WL and the selected Block, the remaining 63 C_{SEG} capacitors for 63 WL in 63 dispersed Blocks in the 63 dispersed Segments either in one Group or different Groups are then to trap the similar Vdd-inhibit and Vss voltages in 63 $V_{inhibit}$ precharge cycles. Since the conventional NAND architecture does not have this 2-level broken-BL hierarchical structure array, thus the trapping of multiple pages of $V_{inhibit}$ and Vss voltages cannot be realized. Conversely, multiple trappings of $V_{inhibit}$ and Vss voltages can be realized in this HiNAND2 array, thus the Multiple-WL and All-BL Program scheme can be easily executed to save 64-fold reduction in program time if each String includes M=64 WLs.

Case2: In this case, all selected C_{SEG} capacitors are precharged with 7V-inhibit voltage initially by coupling the selected 64 LBLps lines (respectively associated with 64 Segments in dispersed Groups) to 7V with PRE being set to $7V+Vt+V_{margin}$, where V_{margin}~0.5V. For this case, PRE signal is at Vpass~10V.

The precharge cycle is similar for charging N broken C_{GBL} capacitors with Vdd-inhibit and Vss voltages as in Case1 which are coupled from a N-bit PB in accordance with the stored WL-data pattern. Then SEG signal is switched from Vss to Vdd to turn on MLBLp transistors to connect each broken C_{GBL} capacitor to each corresponding C_{SEG} capacitor that is filled with the precharged 7V-inhibit initially. As a result, the voltages of LBL capacitors will be selectively discharged to either Vss or retained to 7V-inhibit voltage according to V_{GBL}=Vss and V_{GBL}=Vdd from the PB respectively through transistors MLBLp set to On-state.

In other words, both Case1 and Case2 need the Vdd-inhibit and Vss-program voltages coupled from the common N-bit PB. But in Case1, no 7V-inhibit voltage is coupled to all C_{SEG} capacitors prior to Program operation. But in Case2, precharging 7V-inhibit voltage to all selected 16 C_{SEG} capacitors are required for a superior PI and Program operations.

In conventional NAND SLC one page (1-WL) Program, it takes about 250 μs. For 64-WL Program in a Consolidated-Block, it takes 250 μs×64=16 ms. For this preferred Multiple-WL and All-BL simultaneous SLC Program in 64 Dispersed Block, it only needs 250 μs. This is a big saving in NAND Program throughput.

This Multiple-WL and All-BL SLC Program scheme can be similarly applied for a MLC or TLC, even XLC Program to save the program time. Regardless of Case1 or Case2 program, the N-bit PB is a same LV PB as the conventional NAND.

In principle, the total numbers of WLs to be programmed of the present invention are subject to at least following factors: 1) P/N junction leakages, 2) operating temperature, 3) precharged $V_{inhibit}$ voltages, 4) the length or value of each C_{SEG} capacitance and 5) the number of Caches in a PB.

Firstly, the total numbers of WLs to be programmed is determined by how long the trapped $V_{inhibit}$ voltage (7V or Vdd) can last duo to the junction leakages of P/N source/drain areas of one transistor of MLBLp, one transistor of MS/MG, one transistor of MLBLp and 64 transistors of NAND cells, MC, per C_{LBL} capacitor. Since 64 WLs are being simultaneously programmed in 250 μs per SLC, thus retaining all 64 trapped $V_{inhibit}$ voltages in 250 μs should not be a bottleneck of program time. The longest time is the 64-WL data loading into and trapped in the 64 N×C_{LBL} capacitors.

For example, for 2.5 ns/Byte DDR2 transmitted time and 8 KB page size, the total 64-WL loading time would be 2.5 ns×8K=20 μs. Then total 64-WL data needs 20 μs×64=1.28 ms. This time lapse should be okay for this Vdd−$V_{inhibit}$ and 0.1 pf per C_{LBL} capacitor. If there is a concern to retain $V_{inhibit}$ within a 1.28 ms time lapse, then 2 cycles of two 32-WL or 4 cycles of 16-WL Program can be used instead. As a result, even a 16-WL and All-GBL simultaneous Program is still a great saving in program time.

Secondly, the P/N junction leakage is highly depended on operating temperature. In particular, the higher operating temperature is, the higher P/N junction leakage. Thirdly, the higher precharged $V_{inhibit}$ voltage is, the longer retaining time for part of C_{LBL} capacitors. In practice, the highest $V_{inhibit}$ voltage is set to be around 7V. Additionally, the length or value of each C_{LBL} capacitance is another determination factor for the number of WLs during simultaneous Program operation. Furthermore, the number of Caches in a PB also affects the determination of the total number of WLs to be programmed simultaneously.

Are 64 Cache memories per PB required to store 64-WL data and their associated addresses for a 64-WL simultaneous program? Practically, for programming 64-WL to have 64 Cache per PB is not economic. It is desired to determine an optimal number of Cache memory for more flexible handling of on-chip Program-Verification of MLC or TLC Program operation. One option is that the multiple-WL data is preferably loaded into a 4-Cache memory serially from NAND 8×I/Os in a pipeline manner. Therefore, no multiple Registers or Caches to store all K-WL data is required for this HiNAND2's architecture design. In other words, under the preferred condition that the number of Registers or Caches is smaller than K, for example, ½ K or ¼ K, etc.

FIG. **6**A is a diagram showing a set of SLC Read timing waveforms for Multiple-WL and All-GBL simultaneous Read operation with a preferred set of initial biased conditions in accordance with the 1-bit static PB circuit shown in FIG. **5**A of both HiNAND1 and HiNAND2 arrays according to an embodiment of the present invention. As shown, the control signals RECALL, PGM, LOAD, and VFY are set to 0V as initial biased conditions in accordance with the PB circuit shown in FIG. **5**A. Since SLC Data Register has 4 paths of 4 operations to set the digital value D**1** of one Latch comprising INV0 and INV1, so D**1** is set to **0** when WAT_BK is subjected to one-shot pulse of Vdd; D**1** is also set to **0** when LATO is subjected to one-shot pulse of Vdd; D**1** is set to 1 when signal VFY is subjected to one-shot pulse of Vdd and Q[i] is coupled to Vdd; D**1**=1 when RW_RES signal is subjected to one-shot pulse of Vdd.

As shown in FIG. **6**A, the SLC Read Timing Waveforms start from two undistinguished SLC states such as the erased E-state and the programmed A-state with one Latch's output D**1** node reset to Vdd as an E-state in a Program-Buffer along with the Selected WL voltage set to a value of V_{R1} initially. For those selected NAND cells storing E-state, the corresponding GBL capacitor voltage would be discharged to Vss to flip the Latch's D**1** from Vdd to Vss. For those selected NAND cells storing A-state, the corresponding GBL capacitors' voltage would be retained after charge-sharing and then amplified by the Multiplier to retain Latch's D**1**=Vdd, thus the stored state is A-state. Once the first selected WL data is successfully distinguished, the page data would be sent to I/O pins through I/O Control circuit. Subsequently, the remaining second to J WL data would be read out and evaluated each WL one-by-one and then sent out to I/O in a pipeline manner.

FIG. **6**B is a diagram showing a set of Sample/Hold Multiple-WL SLC PGM patterns timing waveforms in accordance with the 1-bit static PB circuit shown in FIG. **5**A of both HiNAND1 and HiNAND2 arrays according to an embodiment of the present invention. as shown, the initial biased conditions includes setting T3B signal at Vdd and setting RECALL, LATP, RES signals at 0V in accordance with the PB circuit shown in FIG. **5**A for the preferred Multiple-WL and All-GBL simultaneous Program operation.

As shown in FIG. **6**B, the Multiple-WL SLC data are serially loaded into and stored at those well-planned N-bit broken metal1 LBL capacitors in the selected Segments, Groups of HiNAND2 array. Since the S/H function is to load multiple-WL data into SLC Data Register within a Program operation rather than a Program-Verify operation, the VFY signal is set to 0V. Additionally, it is not within a Read operation either, thus T3B signal must be set to Vdd. Again, it is rather than a Recall operation, thus RECALL signal must be set to 0V. In particular, the multiple-WL data is serially loaded in to SLC Data Register in unit of Byte if I/O number is eight (8) or in unit of Word if I/O number is sixteen (16).

For storing J-WLs SLC data in the designated array areas of the broken metal1 LBL capacitors, totally J preferred rows of LBL capacitors near the PB are required. During J-WL Program-Verify operation, a Recall operation to restore the Program SLC data pattern in HiNAND array to SLC Data-Register **506** in the PB **500** (see FIG. **5**A) is performed sequentially in a predetermined order from one-WL by J-WL to save the silicon area of J−1 Data Register.

Next, the WL-data loading into Data Register **506** (see FIG. **5**A) starts with a one-shot pulse of RW_RES to reset D**1**=Vdd initially. The first SLC WL-data would be serially loaded into Data Register **506** in PB from external I/Os **522**

in unit of Byte as an example. Then for transferring N-bit of a large WL size of 16 KB, it will take 16K times to fill up whole page of one WL SLC data. After 16 KB one WL SLC data being successfully loaded into N-bit Data Register **506** through bus **520** and Y-pass **510**, then the whole 16 KB data in the Data Register **506** via BLP line would be stored in the corresponding designed N-bit broken metal1 GBL or metal1 LBL capacitors by one-shot of PGM clock. This one page or one row of LBL or GBL capacitors is termed as Dynamic Cache in HiNAND array. For data bit=1, then the corresponding LBL or GBL capacitor would store Vdd voltage, while data bit=0, then the corresponding LBL or GBL capacitor would store Vss=0V voltage accordingly.

FIG. **6**C is a diagram showing a set of set biased conditions of Multiple-WL and All-GBL SLC simultaneous PGM timing waveforms in accordance with the 1-bit static PB circuit shown in FIG. **5**A. As shown, the biased conditions include setting signals LOAD and LATP to 0V in accordance with the PB circuit **500** in FIG. **5**A. This preferred set of Multiple-WL SLC Program waveforms should be performed along with the associated S/H waveforms shown in FIG. **6**B.

Since this is the preferred S/H operation in Program operation to load WL-data into SLC Data Register **506** (see FIG. **5**A), rather than Program-Verify thus VFY=0V, rather than Read, thus T3B=Vdd, and rather than Recall, thus RECALL=0V. The data is serially loaded in to SLC Data Register **506** in unit of Byte if I/O number is eight (8) or in unit of Word if I/O number is sixteen (16).

FIG. **6**D is a flow chart showing a method for the preferred Multiple-WL and All-GBL SLC simultaneous Program operation in accordance with the preferred PB circuit shown in FIG. **5**A. As shown, the method for performing a SLC Multiple-WL and All-BL Program operation for both 2D and 3D HiNAND2 arrays starts from loading the 1-WL or 1-page SLC data from external I/Os sequentially into N-bit Data Register (step **710**). Once a whole page of N-bit data is ready in Data register, then whole one-WL SLC data is then being transferred to N-bit Selected LBL capacitors as termed as Dynamic Caches in step **712**.

Total WLs' SLC data are checked if all of them being successfully transferred to the multiple designated N-bit Dynamic Caches and Static Cache as shown in step **714**. If the check indicates that all of WLs' SLC data have been successfully transferred to the multiple designated N-bit Dynamic Caches and Static Cache, then the Multiple-WL Program operation is activated in step **718**. If not, then the above loading is continued sequentially by increasing the page counter to next page address in step **716**.

Once the Program operation is finished after one iterative program pulse, then the next Multiple-WL Program-Verify operation would be initiated as shown in step **722**. But prior-to this Program-Verify operation, a Recall operation is performed at step **720** to restore multiple-WL N-bit program data from Dynamic Cache or LBL capacitors back to the corresponding bits of one Static PB which is shared by multiple-WL SLC data. Thus, the Recall is performed on one-WL by one-WL basis sequentially.

During each WL data Program-Verify operation, those bits passing the Program-Verify in one selected WL have to be set a $V_{inhibit}$ voltage on the selected GBLs and transferred to selected LBL dynamic cache in parallel at step **724**. The next WL data is moved to be subjected to the next Program-Verify and is checked to see if all multiple-WL programmed data being checked at step **726**. If not, then move to next iterative program cycle by increasing Vpgm by ΔVpgm on multiple WLs simultaneously. And then the next iterative program pulse is issued again at step **728**.

The Program and Program-Verify iterative operations on all selected multiple WLs will be continued and checked. Once all multiple-WL data being programmed passing the verification of desired data at step **730**, and the Program and Program-Verify iterative operations will be stopped at step **732**.

FIG. **7**A is a diagram showing a set of MLC Read timing waveforms for performing the preferred Multiple-WL and All-GBL MLC simultaneous Read operation in accordance with the multi-bit static PB circuit shown in FIG. **5**B of both HiNAND1 and HiNAND2 arrays according to an embodiment of the present invention. As shown, the timing waveforms start from initial setting E-state with two bits of CODE1 and CODE2 generated from on-chip Code generator and rolling from E-state, A-state, B-state, and C-state for comparison against to two bits per NAND cell read from multiple selected WLs. The PB circuit is configured for MLC Read operation by disabling Program and Program-Verify functions by setting control signals of VFY, PGM, LOAD, PGM_DIS, to 0V and setting signals RECALL1 to RECALLe, L2A1 to L2Ae, and PGM_EN to 0V, and also by setting RW_RES to 0V, etc.

The data comparison starts first, by applying one-shot RES signal, from the preferred lowest level of E-state to A-state to B-state and then C-state by applying the same step-rising voltages on multiple selected WLs with V_{R1} (0V) to differentiate A-state from E-state, V_{R2} to differentiate B-state from A-state and V_{R3} to differentiate the last C-state from B-state.

Once the data is matched, the data would be locked into the corresponding Data Buffer upon each rising-edge of T7 clock that will sequentially set LAT signals of corresponding Data Registers. The T3 and T5 are the signals used by each DRAM-like Latch-type SA **304** shown in FIG. **5**B.

FIG. **7**B is a diagram showing a set of Sample/Hold Multiple-WL PGM patterns timing waveforms for the preferred Multiple-WL and All-GBL MLC simultaneous Program Patterns operation in accordance with the multi-bit static PB circuit shown in FIG. **5**B. As shown, the timing waveforms start from first setting all DLs to initial E-state by applying one-shot pulse of RW_RES. Then the external Multiple-WL program data are sequentially loaded into the static on-chip Data Cache in unit of byte if 8 I/Os NAND is used or in unit of Word if 16 I/Os NAND is used through I/O control circuit and system clocks.

First, the whole WL Word or Byte data are sequentially clocked by a plurality of LOAD clocks' rising edge. Totally, 2 N-bit MLC data per one WL are loaded into 3 N-bit static Data Cache. After that, L2A1 and L2A2 clocks are sent to load two corresponding C_{SEG} capacitors in multiple Segments in one Consolidated HiNAND Group or to one Segment per multiple Dispersed HiNAND Groups as explained previously in FIGS. **4**A-**4**D.

Since the storage data is MLC type, it just needs two clocks of L2A1 and L2A2. If the storage data is TLC type, then it needs three L2A1, L2A2 and L2A3 signals to complete 3-bit TLC loading into 3 N-bit Data Cache Registers. Note, in the circuit of Data Buffer of FIG. **5**B, the two MLC outputs are shorted at OUTP node through two MN**15** transistors MSB and LSB bits of Data Buffer. That is why two separate clocks are needed to avoid data contention on OUTP node if 2-bit of MLC data per GBL line is sent.

Once all MLC programmed data are fully loaded into 2 N-bit Data-Buffer, then 2 MLC bits have to serially loaded into the different C_{SEG} capacitors in predetermined

addresses through only one shared GBL and one BLP line. Thus it needs to be loaded by two clocks of L2A1 and L2A2 with BIAS≥Vdd for passing the MSB and LSB WL data into the corresponding C_{SEG} Dynamic Cache Registers, which actually are capacitors in HiNAND designated areas with the input of Multiplier **602** being disconnected.

But the Program and Program-Inhibit pattern has to be generated per one 2-bit MLC data before Multiple-WL Program being executed. This can be done by using a circuit of MN**24**, MN**25**, . . . , MN**30** and MN**6** with gate tied to PGM_DIS. For MLC, only D**1** and D**2** are required. For TLC, D**1**, D**2** and D**3** are required to be at Vdd to reset Q0B to Vss so that BLP is set to Vdd to prohibit further program to avoid over-programming. Otherwise, unmatched MLC data would set BLP and GBL to Vss to allow the next program pulse to increase Vt from E-state to A-state. Initially BLP and GBL are set to be 0V for programming by applying one-shot pulse to reset signal PGM-EN to set Q0 at Vss but Q0B at Vdd, and set BLP to Vss at the output of INV8. Once matched, then MATCH is set to Vdd to reset Q0B at Vss again so that BLP is at Vdd to provide the Vdd-Inhibit GBL voltage for those matched MLC cells.

Once Program and Program-Inhibit of N-bit MLC is ready per whole selected Multiple WLs, then the Program operation is initiated.

FIG. **7**C is a diagram showing a set of biased conditions of Multiple-WL and All-GBL MLC simultaneous PGM timing waveforms in accordance with the preferred PB circuit shown in FIG. **5**B. Similar timing waveforms can be extended to TLC and XLC simultaneous Program operation. As shown, the timing waveforms include the HiNAND2 array's major control signals such as SEL, WL, RES, T3B, VFY, RW_RES, RECALL1, RECALL2, PGM, PGM_EN, PGM_DIS, L2A1, L2A2, Q0 of three WLs, etc. The selected multiple WLs are applied with same step-rising Vpgm on the same address of multiple WLs. Unlike the conventional NAND Program, the Vpgm only applied to only one selected WL, the HiNAND Program operation can be performed simultaneous on one and more selected WLs to cut the total program time.

One major difference is that there are more than one WL Program-Verify operations are performed between two successive program pulses. In a first step, the initial one 2-bit E-state code of a MLC cell are generated on CODE1 and CODE bits to two DLs in two Data-Buffers **640** in FIG. **5**B. And two outputs of D**1** and D**2** are coupled to the gates of MN**24** and MN**25** with D**1** and D**2** being set to Vdd in the beginning of program cycle when one-shot clock of RW_RES is applied to the gate of MN**13**. Besides, SA and Latch of INV4 and INV5 are reset by one common signal of RES. As a result, initially, both IB[i] and Q[i] are at Vss and D**1** and D**2** are at Vdd.

In the next step, the T7 signal is first applied an one-shot pulse to enable the latch of INV5 and INV4 for Q[i] or QB[i] to reset IB[i] and I[i] of latch. Before Verify for one selected WL is performed, two Recall signals RECALL1 and RECALL2 have to be performed to restore the stored 2-bit program data in two C_{SEG} capacitors or Dynamic Registers back to 2-bit Data-Buffers **340** through one Multiplier **602** and one SA **604**. In addition, one Program and Program-Inhibit MLC data patterns needs to be restored back to one program buffer of 304. That is why three clocks of RW_RES, RECALL1, and RECALL2 and three T7 clocks in between are required to enable SA **604**. Once above 2-bit MLC data of program data is ready, the Multiple-WL Program-Verify operation can be performed by one-shot VFY thereafter.

The new Program and Program-Inhibit 2-bit data will be sent back to two C_{SEG} capacitors again, which can be done by two one-shot L2A1 and L2A2. A new cycle of Program-Verify is then moved to next selected WL in same VFY**1** of same WL voltage of previous WL. The above Program-Verify cycles would be performed on all selected multiple WLs. Then whole multiple-WL simultaneous Program will be performed again with rising Vpgm pulse. This iterative Program operation will end once all selected multiple WLs are completely programmed to meet the desired stored data.

FIG. **7**D is a flow chart showing a method for the preferred Multiple-WL and All-GBL MLC simultaneous Program operation in accordance with the multi-bit static PB circuit shown in FIG. **5**B. The method is applicable for performing MLC Multiple-WL and All-GBL simultaneous Program operation for both 2D and 3D HiNAND2 arrays according to an embodiment of the present invention. As shown, the method starts from a step **740** to load external 1-page or 1-WL data to the designated N-bit Data Register sequentially for all Multiple WLs. The data can be 1×N-bit SLC, 2×N-bit MLC, 3×N-bit TCL or 4×N-bit XLC.

When a first WL data is successfully loaded into N-bit Data Register, then it is immediately transferred to the corresponding N-bit Cache Register as seen in step **742**. When the first WL data is successfully loaded into N-bit Cache Register, then it is immediately transferred to the corresponding N-bit Program Buffer Register that is made of N local LBL capacitors in the designated areas of HiNAND2 array as shown in step **744**.

Then next step **746** is to check if all the desired program data of Multiple WLs being successfully loaded in the designated metal1 LBL capacitors? If not, then the loading from external I/O to LBL capacitors will be repeated (step **748**) for next page until it completes. If yes, then the step **750** is to start the Multiple-WL simultaneous Program. The one-shot pulse of Vpgm for Multiple selected WLs one per Segment or Group should be the same along with Vpass on multiple unselected WLs.

Once program time is due, then a Recall destructive operation of step **752** is preferably being implemented prior to the Program-Verify operation in step **754**. The reason needs to do the Recall is to restore Multiple programmed WL data that are stored in the corresponding N-bit LBL metal1 capacitors as seen in FIG. **4**A and FIG. **4**B. For example, if the stored data is the MLC data, then it requires 3 N-bit Cache Registers to store total three N-bit MLC data for each WL in three rows of LBL metal1 capacitors. For 16-WL MLC data simultaneous Program, the restoring of 16-WL MLC data takes 3×16=48 clock cycles for 3-bit MLC WL data.

Since the stored 3-bit MLC data are being restored back into 3-bit Cache Register per GBL, then the data read from the selected WL bit can be compared against to the stored data. Thus the Program-Verify operation is activated at step **754**. Note, the Program-Verify operation of HiNAND memory cells is using DRAM-like charge-sharing scheme for HiNAND2 or HiNAND1 Read operations that need to precharge and discharge the metal1 LBL and metal2 GBL lines (details are can be seen in earlier sections of the specification and skipped here for the description simplicity). Note, the restoring of the first multiple WLs' data of corresponding metal1 LBL and metal2 GBL capacitors should be preferably done during the lengthy Multiple-WL Program operation to save the first program-verify time because all N-bit GBL line buses are free in that period.

In step **756** a successful Program-Verify operation is done for the first N-bit data of the selected WL after the first

iterative Program operation. The successfully verified data in Data Register are flipped to V-inhibit and is transferred to dynamic cache in parallel. Then the new set of Program and Program-Inhibit patterns are restored back to the corresponding metal1 broken LBL capacitors (step **758**) for next-bit of MLC Program in the same WL.

A check operation is then executed (step **760**) if all bits of each WL MLC data being Program-Verified. If not, move to the next WL (page) in step **762** to repeat the above Program-Verify steps **752-758** until all multiple-WL MLC data completely pass Program-Verify (step **764**), then the method for performing MLC Multiple-WL and All-GBL simultaneous Program operation for both 2D and 3D HiNAND2 arrays ends at step **766**.

FIG. **8** is a diagram showing a preferred set of bias voltage conditions of array control signals for Multiple-WL & All-GBL simultaneous Read operation based on the HiNAND1 array shown in FIG. **2**A according to a specific embodiment of the present invention. A preferred set of bias voltage conditions of several key array control signals are included in a table for performing a preferred J-WL & All-GBL simultaneous Read operation divided into 8 steps. The bias conditions for multiple control signals in each step are listed in one column of the table. The operation is based on the HiNAND1 array shown in FIG. **2**A with only J broken metal1 GBL lines and capacitors only without being further divided into L Segment lines according to a specific embodiment of the present invention. The so-called J-WL and All-GBL simultaneous Read operation means the number of the selected WLs can be flexibly varied from 1 to J with an identical address in the selected NAND String of the J selected Blocks. The number of selected GBL lines is N-bit, thus it is termed as J-WL and All-GBL simultaneous Read. The simultaneous J-WL and All-GBL Read operation is made possible because a novel Charge-sharing scheme is adopted for HiNAND1 array, regardless of SLC, MLC, TLC and XLC Read.

The key HiNAND1 array's selected and unselected control signals include DIV_EN, CSL, PRE, GBLps, SEG, SSL, GSL, WL and GBL in accordance with FIG. **2**A, regardless of SLC, MLC, TLC and XLC storages according to the embodiment of the present invention. As shown in FIG. **8**, the J-WL and All-GBL simultaneous Read operation is preferably being divided into 8 steps from the step 1) of precharging all J N-bit metal1 broken GBL capacitors in all Groups of the HiNAND1 array with a preferred $V_{precharge} \geq$Vdd from J GBLps lines to the last step 8) to send out the well-distinguished N-bit page digital data. Step 4) is to provide a reduced GBL voltage Vdd/M(J) for Off-state cells by charge-sharing a broken GBL capacitor with all GBL capacitors. M(J) is a function of J (i.e., the charge-sharing effect varies for different Group with different location relative to the page buffer circuit in the HiNAND array). The N-bit page data are read from J selected WLs, loaded serially into one or two N-bit Data Registers (top or bottom), and then transferred in parallel to one N-bit Cache Register in unit of one-WL size. Lastly, each WL-data in the N-bit Cache Register are then transferred to NAND's multiple I/Os in a pipeline manner. Today, the regular NAND or ONFI NAND I/O numbers are either 8 or 16.

Typically, one WL Read voltage is termed as V_{Rn}, the 63 unselected WL pass voltage is denoted as Vread=6V for a 64-cell 2D NAND String. The number of V_{Rn} values is one V_{R1} for SLC, 3 (V_{R1}, V_{R2}, V_{R3}) for MLC, 7 V_{Rn} for TLC, and 15 V_{Rn} for XLC.

FIG. **9** is a diagram showing a preferred set of bias voltage conditions of array control signals for Multiple-WL & All-GBL simultaneous Read operation based on the HiNAND2 array shown in FIG. **2**B according to a specific embodiment of the present invention. A preferred set of bias voltage conditions of several key array control signals are included in a Table for performing a preferred J-WL & All-GBL simultaneous Read operation executed in 8 steps. The bias conditions for multiple control signals in each step are listed in one column of the Table. The operation is based on the HiNAND2 array shown in FIG. **2**B with J Groups divided by J−1 MGBL transistors connected by J broken Group GBL metal2 lines according to an embodiment of the present invention. As shown in FIG. **2**B, each Group is further divided into Segments and each Segment is further divided by n broken LBL metal1 lines. Each broken LBL metal1 line comprises K Blocks. And each Block comprises N 64-cell Strings extending in X-direction.

Since HiNAND2 array has 2-level BL-hierarchical structure, thus more array control signals than HiNAND1 are required to take care of both divided metal2 broken J GBL and metal1 broken L LBL lines and capacitors. The key HiNAND2 array includes two new control signals DI_1 and PRE_1, and new LBL-divided NMOS MHV transistor MDBLp in addition to other HiNAND1 control signals like DIV_EN, CSL, PRE, GBLps, SEG, SSL, GSL, WL, and GBL in accordance with FIG. **2**B, regardless of SLC, MLC, TLC and XLC storages of the present invention.

Similarly, the preferred J-WL and All-GBL simultaneous Read operation is preferably divided into 8 steps from the step 1) of precharging all J N-bit metal2 broken GBL to the last step 8) to send out the well-distinguished N-bit page digital data, read from J selected WL serially. Step 4) is also to provide a reduced GBL voltage Vdd/M(J) for Off-state cells by charge-sharing a LBL capacitor with corresponding GBL capacitor for the selected Group. Again, M(J) is a function of J.

FIG. **10** is a diagram showing a first preferred set of bias voltage conditions of array control signals for Multiple-WL & All-GBL simultaneous Program operation based on the HiNAND1 array shown in FIG. **2**A according to a specific embodiment of the present invention. As shown, a set of bias voltage conditions of several key array control signals is provided for 7 steps of an option 1 J-WL & All-GBL simultaneous Program operation for the HiNAND1 array shown in FIG. **2**A of the present invention. The selected/unselected key control signals associated with the 2D HiNAND1 array include DIV_EN, CSL, PRE, GBLps, SEG, SSL, GSL, WL, and GBL (referring to FIG. **2**A). These bias conditions are applicable regardless of SLC, MLC, TLC and XLC storages of the present invention. For example, in step 2) of precharging GBL of selected Group, GBLps associated with the selected Segment is coupled to Vinh (e.g., $V_{inhibit}$ voltage)>Vdd for charging the broken GBL capacitor associated with a selected Segment, the charge is then trapped in the corresponding cell channels of the Strings in selected Block. All GBL lines are subjected to, from the PB, the loaded page data pattern in Vdd/Vss respectively for inhibit/program cells. In another example, at step 6), a Recall operation is to restore multiple-WL N-bit program data from a Dynamic Cache made of broken LBL capacitors back to the corresponding bits of one Static PB which is shared by multiple-WL SLC data before a Program-Verify operation is performed. The selected programmed WL is switched from Vpgm voltage to VFYn (n=1 for SLC, n=3 for MLC, n=7 for TLC, and n=15 for XLC).

FIG. **11** is a diagram showing a second preferred set of bias voltage conditions of array control signals for Multiple-WL & All-GBL simultaneous Program operation based on

the HiNAND1 array shown in FIG. **2**A according to a specific embodiment of the present invention. As shown, another preferred set of bias voltage conditions of several control signals is provided for 7 steps of an option 2 J-WL & All-GBL simultaneous Program operation for the HiNAND1 array shown in FIG. **2**A of the present invention. The key control signals include DI, DIV_EN, CSL, PRE, LBLps, SEG, SSL, GSL, WL, LBL, and GBL are associated with the 2D HiNAND1 array (FIG. **2**A) regardless of SLC, MLC, TLC and XLC storages of the present invention. In the option 2 operation, all steps are substantially the same as option 1 operation except in precharging step the GBLps line is coupled to just the Vdd voltage rather than higher $V_{inhibit}$ voltage to save power for precharging while using conventional SB coupling effect for cell Program.

Unlike the above mentioned (FIG. **8** and FIG. **9**) J-WL and All-GBL simultaneous Read operation for both HiNAND1 and HiNAND2 arrays, the maximum number of multiple-WL simultaneous Program should not be limited by J number, although it is optimized to be less than 20 in HiNAND Read as a same design guideline used in conventional DRAM charge-sharing sensing scheme. In this preferred simultaneous Multiple-WL Program operation, no charge-sharing concern is involved.

FIG. **12** is a diagram showing a first preferred set of bias voltage conditions of array control signals for Multiple-WL & All-GBL simultaneous Program operation based on the 2D HiNAND2 array shown in FIG. **2**B, regardless of SLC, MLC, TLC and XLC storages, according to another specific embodiment of the present invention. As shown, a preferred set of bias voltage conditions of several control signals is provided for an option 1 Multiple-WL & All-GBL simultaneous Program operation for the 2D HiNAND2 array shown in FIG. **2**B of the present invention. The key control signals such as DI, DIV_EN, CSL, PRE, LBLps, SEG, SSL, GSL, WL, LBL, and GBL are included for executing a preferred Multiple-WL & All-GBL simultaneous Program operation in 7 steps for the 2D HiNAND2 array, regardless of SLC, MLC, TLC and XLC storages of the present invention.

Like the above mentioned J-WL and All-GBL simultaneous Read and Program operation for the HiNAND1 array, the maximum number of multiple-WL simultaneous Program of the HiNAND2 array should not be limited by J because no charge-sharing concern is involved.

FIG. **13** is a diagram showing a second preferred set of bias voltage conditions of array control signals for Multiple-WL & All-GBL Simultaneous Program operation based on the 2D HiNAND2 array shown in FIG. **2**B, regardless of SLC, MLC, TLC and XLC storages, according to yet another specific embodiment of the present invention. As shown, a preferred set of bias voltage conditions is provided for an option 2 Multiple-WL & All-GBL simultaneous Program operation for 2D HiNAND2 array shown in FIG. **2**B of the present invention. The key control signals such as DI, DIV_EN, CSL, PRE, LBLps, SEG, SSL, GSL, WL, LBL, and GBL are included for executing a preferred Multiple-WL & All-GBL simultaneous Program operation in 7 steps for the 2D HiNAND2 array, regardless of SLC, MLC, TLC and XLC storages of the present invention.

Like the above mentioned Option 1 J-WL and All-GBL simultaneous Read and Program operation for the HiNAND1 array, the maximum number of multiple-WL simultaneous Program of the HiNAND2 array should not be limited by J because no charge-sharing concern is involved.

FIG. **14** is a diagram showing a preferred set of bias voltage conditions of 2D HiNAND array for a Multiple-WL & All-GBL simultaneous Erase operation using Channel-Erase scheme, regardless of SLC, MLC, TLC and XLC storages, according to an alternative embodiment of the present invention. As shown, a preferred set of bias voltage conditions is provided for performing Multiple-WL & All-GBL simultaneous Erase operation using FN-channel tunneling Erase scheme as used for conventional 2D NAND flash based on 2D HiNAND1 array (Embodiment 1 in FIG. **2**A) and 2D HiNAND2 array (Embodiment 2 in FIG. **2**B) with dispersed Blocks. The biased conditions for the selected and unselected control signals including DI, DIV_EN, CSL, PRE, GBLps, SSL, GSL, WL, and GBL for a preferred Multiple-WL & All-GBL simultaneous Erase operation for HiNAND1 array shown in FIG. **2**A, regardless of SLC, MLC, TLC and XLC storages of the present invention, are summarized in a Table in FIG. **14**. In the same Table, the biased conditions for control signals DI, DIV_EN, CSL, PRE, LBLps, SEG, SSL, GSL, WL, LBL, and GBL are also listed for a preferred Multiple-WL & All-GBL simultaneous Erase operation for HiNAND2 array shown in FIG. **2**B, regardless of SLC, MLC, TLC and XLC storages of the present invention.

In an embodiment, each Erase operation includes two setup steps such as Erase Setup1 and Erase Setup2 and one execution step of Erase Start as shown in FIG. **14**. As shown, in the first setup step, by using a WL-decoder circuit including one 20V NMOS pass-transistor (not shown) without need of any pull-down transistor, the unselect WLs, SSLs and GSLs control signals are being shut off in a floating state at 0V. Conversely, the selected WLs, SSL and GSL signals are precharged with Vdd-Vt. The rest of other varied gate signals of DI, DIV_EN, PRE and SEC are preferably biased with Vdd and two power lines of CSL an LBLps are also biased at Vdd to help prevent two String-select transistors MS and MG in each String from being punch-throughed when $V_{inhibit}$ voltage~7V is precharged into LBL or GBL capacitors associated with the selected Block of a selected Segment of a selected Group.

The second setup step is used to prepare for the subsequent HV 20V Erase step. All initial HiNAND array low-voltage bias conditions applied to DI, DIV_EN, PRE, LBLps, SEC, SSL, GSL, WL(unselected ones), LBL and GBL are preferably turned into floating states with their respective precharged voltages initially obtained in the Setup1 step by disconnecting the corresponding ports from their respective driver circuits excepting that the selected WL voltage is coupled to 0V.

The Erase Start step is to execute the desired Block-based Erase operation. Unlike prior art, the erase size of the present invention can be reduced down to single, randomly selected WL by setting WL=0V with respect to TPW voltage being switched from 0V as set in the Setup2 step to a high Vers voltage of 20V.

Since 2D NAND uses the FN-tunneling scheme, thus the electrons would be electrically expelled out from each cell's floating-gate to cell's channel. As a result, for each selected WL page each cell's Vt will be reduced below −2.0V after Erase-Verify over each iterative erase pulse. For M WLs to be erased in each String within each Block, M WLs in one String are respectively coupled to 0V. Similarly, one or more WLs can be selected for Erase in one or more Groups with WLs being coupled to 0V with the selected TPW voltage being ramped to 20V.

FIG. **15** is a diagram showing a set of bias voltage conditions preferred for 3D HiNAND array for Multiple-WL & All-GBL simultaneous Erase operation using gate-induced drain leakage (GIDL) Erase scheme, regardless of SLC, MLC, TLC and XLC storages, according to another

specific embodiment of the present invention. As shown, a preferred set of bias voltage conditions is provided for performing Multiple-WL & All-GBL simultaneous Erase operation using GIDL Erase scheme for a 3D HiNAND array with either 1-level BL (Embodiment 1) and 2-level BL (Embodiment 2) architecture with dispersed Blocks. For example, the biased conditions for the selected and unselected control signals include DI, DIV_EN, CSL, PRE, LBLps, SEG, SSL, GSL, WL, LBL and GBL for a preferred Multiple-WL & All-GBL simultaneous Erase operation for Embodiment 2, regardless of SLC, MLC, TLC and XLC storages of the present invention, are briefly explained below.

The Erase operation for 3D HiNAND array is preferably performed the same as 2D HiNAND array with erase-size flexibly reducing down to single WL except with one major difference in the Erase scheme. Unlike a FN-Erase scheme used for 2D HiNAND array (see FIG. **14**), a scheme with GIDL-induced hot-hole to erase the electrons stored in the charge-trapped layer is used for 3D HiNAND array due to the built-in deep-layer cell structures. Therefore, the selected bit line and source line of the selected 3D String have to be coupled to Vers, rather than in floating state as used for 2D String. Similarly, the voltages of DI, DIV_EN, PRE, LBL, LBLps, SEC have to coupled to Vers to allow the full Vers voltage pass to the selected bit line and source line without a drop to ensure the success of Erase operation.

Unlike 2D HiNAND2 array having a 64-cell String is very popular, 3D HiNAND array has less number of cells in one String. Thus, 3D HiNAND2 simultaneous operation has to be re-adjusted accordingly. In this case, a similarly mixed WL number of three simultaneous operations are preferably performed in 3D HiNAND2 array with a shorter String length is summarized in Table 7 below.

TABLE 7

	Preferred operation		
	Simultaneous Erase	Simultaneous Program	Simultaneous Read
WL number	64/32	16 or 8	16 or 8

FIG. **16** is a simplified circuit diagram showing a 3D HiNAND2 array with 2-transistor GBL/LBL-divided device and U-shaped vertical-channel String according to an embodiment of the present invention. As shown, 3D HiNAND2 array includes J−1 paired 2-transistor GBL/LBL-divided device to from broken metal2-GBL/metal1-LBL lines (or capacitors) to form multiple Groups (e.g., Group 1 through Group J) of multiple Segments of multiple memory Blocks MU made by U-shaped vertical-channel Strings. Similar to 2D HiNAND2 array, metal1 lines are one topological level lower than metal2 lines in device layout. Each top-level metal2 GBL line is broken into J metal2 GBL lines or capacitors, such as GBL_1 to GBL_J, by using (J−1) paired GBL-divided NMOS transistors, MGBLp. Gates of the (J−1) GBL-divided devices MGBLp are tied to J−1 respective signals of DIV_EN[1] to DIV_EN[J−1] for forming the preferred broken metal2 GBL 3D HiNAND2 array. In an embodiment, the broken GBL_1 line capacitor in Group 1 is directly connected to a first SA located at left end of the array and the broken GBL_J line capacitor in Group J is connected to a second SA located at the right end of the array, similar to a 2D HiNAND2 array with 2-sided SA of the present invention shown in earlier sections of the specification.

Similarly, each bottom-level metal1 LBL line is broken into n metal1 LBL lines or capacitors, such as LBL_1_1_1 to LBL_1_1_n, by using (n−1) paired LBL-divided NMOS transistors, MDBLp. The device type of MDBLp is similar to that of a 3D NAND String-select transistor, MG or MS. Totally, the n−1 paired transistors MDBLp have their gates tied to respective n−1 signals, DI_1_1[1] to DI_1_n−1[1], for forming the preferred broken metal1 LBL 3D HiNAND2 array. The 3D source nodes of the paired MGBLp transistors are shorted by a metal and the source nodes of another paired MDBLp transistors are shorted by another metal.

Besides, n different ends of n broken LBL capacitors are connected to n corresponding power lines, such as LBLps_1_1[1] to LBLps_1_n[1]. Each 3D HiNAND2 memory Block has N cells connected in series forming a U-shaped vertical-channel String with one back-gate NMOS transistor, MC, having its gate tied to BG_1[1]. The U-shaped vertical-channel Strings are based on traditional multilayered BiCS (Bit-Cost Scalable) or P-BiCS U-shape cell-string manufacturing processes. Detail descriptions on the processes of forming the U-shaped vertical-channel Strings and their operations can be found in U.S. Pat. No. 8,169,826, incorporated fully as references. By dividing the GBL line to multiple Groups as shown above, the preferred Multiple-WL and All-GBL simultaneous Read and Program operations like the 2D HiNAND2 array can be also executed in the 3D HiNAND array without much changes in memory cell manufacture processes.

According to some traditional 3D NAND technologies, for example, in U.S. Pat. No. 8,169,826, both BiCS and P-BiCS use a multi-stacked memory array with a few constant critical lithography steps regardless of number of stacked layers to keep a continuous reduction of bit cost. Therefore, whole stack of electrode plate is punched through and plugged by another electrode material. More information about P-BiCS or BiCS structure can be referred to U.S. Pat. No. 8,334,551, U.S. Pat. No. 8,169,826, U.S. Pat. No. 8,189,391, U.S. Pat. No. 8,194,453, U.S. Pat. No. 8,203,882, U.S. Pat. No. 8,334,551, and U.S. Pat. No. 8,335,111, incorporated fully as references. All of the disclosed vertical 3D NAND array circuits are 2-level non-broken-BL structures for performing single-WL and All-GBL Read, Program and Program-Verify operations with a high power consumption due to the heavy capacitance loading on each long unbroken metal2 GBL line along with corresponding unbroken metal1 LBL line. While with the improved 3D HiNAND array with broken metal2 GBL and broken metal1 LBL lines according to the embodiments of the present invention, multiple-WL and All-GBL Read and Program operations can be performed due to dramatically reduction of the current for executing Read and Program operations.

In the traditional 3D NAND architecture, only one end of each selected, long but unbroken, top-level, metal2 GBL is connected to each corresponding SA at right end of the array through a NMOS transistor. Each GBL line crosses a plurality of horizontal 3D-NAND memory Blocks. And each 3D-NAND memory Block includes a plurality of 3D NAND MUs. Each 3D MU further includes one vertical 3D NAND String with many 3D memory cells connected in series having a back-gate NMOS transistor, BTrb, in the middle (or bottom) of the 3D NAND String having two NMOS String-select transistors, SSTrb and SDTrb, placed on top. The top drain nodes of all MUs within the same memory Block are connected together by a common but unbroken metal1 LBL line or capacitor.

Based on the 3D HiNAND's 2-level unbroken-BL structure, a high-current precharge operation to both GBL and

LBL has to be performed initially prior to any 3D NAND Read operation but only happens on each GBL without LBL. Similar to the 2D NAND Read operation, each GBL line or capacitor has two precharged voltages, such as Vdd-Vt of about 1.0V for the corresponding stored bit data "1" and 0V for the corresponding stored bit data "0", supplied by a N-bit PB that contains N SAs. Therefore, regardless of the nearest memory Block (MB) or the farthest MB from the one-end SA scheme's viewpoint, each traditional unbroken heavy and long GBL and each unbroken LBL capacitors have to be fully charged up to Vdd-Vt or discharged to Vss by one corresponding bit of N-bit PB that contains one-bit of SA through each corresponding global HV transistor and each paired transistors of SSTra and SDTra with a common or separated gate control signals of SGSa and SGDa within each corresponding LBL capacitor (see U.S. Pat. No. 8,169,826). In other words, high power consumption for both precharge and discharge operations of each metal2 GBL capacitors and its associated each metal1 LBL capacitors has no discrimination on all selected MUs in each selected MB of each selected common metal1 LBL line and all selected MBs in each selected common metal2 GBL line when the traditional 3D NAND with 2-level BL-hierarchical structure is adopted for single-WL Program and Read scheme.

Unlike the above conventional 3D NAND Read and Program schemes, one embodiment of a 3D HiNAND2 scheme of the present invention provided above in FIG. **16** proposes a novel 3D architecture with modifications in circuit particularly in GBL and LBL layout to allow much powerful Multiple-WL and All-BL simultaneous Read, Program and Program-Verify operations as explained below. Several alternative embodiments of the 3D HiNAND2 scheme with references to FIG. **17**, FIG. **18** and FIG. **19** of this application are further illustrated.

In an embodiment, as shown in FIG. **16**, each long metal2 GBL has been changed to a plurality of broken or segmented metal2 GBLs, such as GBL_1, GBL_2, through GBL_J in one of the 3D HiNAND with a one-end SA scheme. The capacitance of each piece-wise, broken GBL_J line is only 1/J of capacitance of traditional long GBL line. For example, if the right-most broken GBL_J is the one that is connected to the SA at the right end, then the GBL capacitor, C_{GBL_J}, is a nearest one connected to the corresponding SA at right end. By contrast, the left-most C_{GBL_1} capacitor would become the farthest one connected to the SA at the right end.

The newly inserted devices in between two adjacent broken C_{GBL_J} and C_{GBL_J-1} capacitors is a paired transistors of NMOS HV MLBLp with two gates tied to a common signal of DIV_EN line such as DIV_EN[1] to enable and disable the selection of the corresponding broken GBL_1, and DIV_EN[2] to enable and disable the selection of GBL_2 and lastly DIV_[J−1] to enable and disable the selection of the corresponding broken GBL_J−1. The last one of the broken GBL_J is directly connected to its corresponding SA without going through any MLBLp transistor.

In this 3D HiNAND2 operation, both DIV_[1]=DIV_[2]= . . . =DIV_[J−1]=Vread to allow the selection of GBL_1. The Vread is preferably set to be about 6V to reduce the on-resistance of each MGBLp transistor to reduce the RC delays of precharge and discharge operations. Note, the GBL_1 precharge and discharge times are the slowest with the highest power-consumption for this 3D HiNAND2 Read scheme due to the largest RC from each one-end SA sensing viewpoint. Several scenario are shown below:

A) For reading GBL_1, the largest RC=[(J−1)×R(MLBLp)]×[J×C_{GBL}],

B) For reading GBL_2, the RC=[(J−2)×R(MLBLp)]×[(J−1)×C_{GBL}],

C) For reading GBL_J−1, the RC=1×R(MLBLp)]×[2×C_{GBL}],

D) For reading GBL_J, the RC=1×C_{GBL} with zero R(MLBLp). The smallest RC from right-end N-bit SA viewpoint.

More details of comparison between traditional 3D NAND with unbroken GBL and the 3D HiNAND2 of the present invention (see FIG. **16**) with broken GBL for 1-WL Read charge-sharing operation are summarized in the following Table 8.

TABLE 8

1-WL and All-GBL Read charge-sharing operation

Read comparison	3D NAND	3D HiNAND2	Comment
Each broken GBL with each unbroken LBL line	unbroken GBL	J broken GBL	J = 16
C_{GBL} loading to precharge Jth memory Block near SA	16 C_{GBL}s	1 C_{GBL}	1/16 power
C_{GBL} loading to precharge 15th memory Block	16 C_{GBL}s	2 C_{GBL}s	1/8 power
C_{GBL} loading to precharge 2nd memory Block	16 C_{GBL}s	15 C_{GBL}s	15/16 power
C_{GBL} loading to precharge 1st memory Block	16 C_{GBL}s	16 C_{GBL}s	16/16 = 1, i.e., same power

The above explanation of the 3D HiNAND2 array is to show how to read one WL by one WL from different broken GBL and impact of charge-sharing if the similar DRAM-like Latch-type SA is used for this 3D HiNAND2 Read operation for one WL.

More comparison between traditional 3D NAND with unbroken GBL and the 3D HiNAND2 of the present invention (see FIG. **16**) with broken GBL for Multiple J WLs All-GBL simultaneous Read charge-sharing operation is illustrated below in Table 9.

TABLE 9

J-WL and All-GBL Read charge-sharing operation

Read comparison for	3D NAND	3D HiKAND2
Each broken GBL with each unbroken LBL line	unbroken GBL	J broken GBL (J = 16)
Precharge time of all GBL lines and LBLs in 16 memory Blocks	16X One memory Block by one memory Block, thus 16 times for 1 GBL	1X Simultaneously on 16 memory Blocks one time only
V_R on selected WLs	16 V_Rs for 16 WLs	1 V_R for 16 WLs
# of LBL & GBL discharged	16 times 1WL-by-1WL for 16 WLs	one time for 16-WL

In above 3D HiNAND2 flash array with broken-GBL but with non-broken LBL scheme, it allows the Multiple-WL simultaneous Read, Program, and Program-Verify operations to be performed within multiple memory Blocks. However, for traditional 3D NAND flash array, the Multiple-WL simultaneous Read, Program, and Program-Verify operations cannot be performed even within only one memory Block.

For the 3D HiNAND2 flash array, it includes J broken metal2 GBL lines and K broken metal1 LBL lines. The values of J and K can be different or same. There are two

major advantages to change one unbroken LBL into K broken LBL lines per one broken GBL line is for the preferred low-power, simultaneous, fast, multiple-WL Program and Program-Verify operations. In an embodiment, the scheme of one of K broken LBL lines consumes only 1/K of $V_{inhibit}$ precharge current of the whole unbroken LBL line. As explained in 2D HiNAND2 array with a broken LBL structure, each of the K broken LBLs would have only 1/K capacitance of whole unbroken LBL capacitor. In a preferred Non-SBPI method of the present invention, only 1/K power is required to precharge each selected broken LBL capacitor to $V_{inhibit}$ voltage, which is about 7V. In another embodiment, the scheme of the K broken LBL lines allows K-WL and All GBL simultaneous Read, Program, and Program-Verify operations to be performed in only one small MB, rather than multiple big MBs. Thus, this scheme provides more fine multiple-WL & All-GBL Program.

There is a disadvantage with the K broken LBL structure for Kth broken LBL would be associated with only 1/K capacitance of whole unbroken LBL capacitor. Due to the required charge-sharing scheme for the preferred Multiple-WL Read and Program-Verify operation, the 3D HiNAND2 array with broken-LBL structure still has its application for multiple-WL Read except the MB of GBL_J. The results for one-end SA 3D HiNAND2 scheme are summarized in Table 10 below.

TABLE 10

16-WL and All-GBL Read charge-sharing operation

Comparison	3D HiNAND2	3D HiNAND2
For one-end SA	Broken GBL but non-broken LBL scheme	Broken GBL & broken LBL scheme
16-WL simultaneous program in 16 memory Blocks?	Yes but consumes 16X $V_{inhibit}$ power	Yes but consumes 1X $V_{inhibit}$ power
16-WL simultaneous program in one memory Block?	No	Yes
Multiple-WL & All-GBL Read in 16 memory Blocks?	Yes	Yes
Multiple-WL & All-GBL Read in one memory Block?	No	Yes on GBL_16 only

In an alternative embodiment, a 3D HiNAND2 scheme with two-ended N-bit SA on each GBL including a first N-bit SA placed at the right end and a second N-bit SA placed at left end. For example, in a 3D HiNADN2 with 16 broken GBL scheme and two-ended SA, there are two nearest and two farthest GBL capacitors per one metal2 GBL. In particular, two nearest GBL capacitors are GBL_1 from the far-left SA viewpoint and GBL_16 from the far-right SA viewpoint, and two farthest GBL capacitors are GBL_8 from the far-left SA viewpoint and GBL_9 from the far-right SA viewpoint, here J=16. The detailed operations of this two-ended SA associated with the 3D HiNAND2 array with broken GBL and broken LBL or unbroken LBL schemes would be similar to the one-ended SA associated with the same 3D HiNAND2 array explained previously and the corresponding descriptions are then skipped here for simplicity.

FIG. **17** is a simplified circuit diagram showing a 3D HiNAND2 array with 3-transistor divided-GBL/LBL device and U-shaped vertical String according to another embodiment of the present invention. It is a second embodiment of 3D HiNAND2 circuit with divided GBL devices for the broken GBLs and broken LBLs. The divided GBL devices include one paired NMOS transistors of MGBLp with a common gate connected to DIV_EN and one Back-gate NMOS transistor of MC with its gate tied to BG. Similarly, the divided LBL devices are comprised of one paired transistors of MLBLp with a common gate tied to DI_1 and one back-gate NMOS transistor, MC, with gate tied to BG_[1].

Besides the one divided device is added in between two adjacent broken GBL capacitors and two adjacent broken LBL capacitors, there are additional devices are added at one end of each LBL and each GBL. These devices are like the above said devices for the Divided or broken LBL and GBL.

For example, these devices include one-paired MLBLps with the common gate tied to PRE_1_1[1] to PRE_1_n[1] with power line of LBLps_1-1[1] to LBLps_1-n[1]. Similarly, the same MGBLps transistor can be added to each broken GBL line for precharging or discharging the $V_{inhibit}$ or Vss. But in order to save one the transistors and power line, GBLps, is not added into each broken GBL.

The differences between the embodiment in FIG. **16** and the embodiment in FIG. **17** is to add one extra back-gate transistor MC in series with the paired 2-transistor GBL-divided device MGBLp to form a 3-transistor GBL-divided device, and similarly, add one back-gate transistor MC in series with the paired 2-transistor LBL-divided device MDBLp. Each added transistor MC has its gate respectively tied to a signal BG. All other circuits such as two-sided SA and 3D NAND Strings are kept the same as a traditional U-shaped vertical NAND flash technology.

FIG. **18** is a simplified circuit diagram showing a 3D HiNAND2 array with 1-transistor divided-GBL/LBL device and with U-shaped vertical-channel String according to yet another embodiment of the present invention. It is a third embodiment of 3D HiNAND2 flash array circuit. As shown, it includes both broken metal2 GBL lines and broken metal1 LBL lines. The divided devices do not include one paired transistors but one back-gate transistor (such as MGBLp, or MDBLp). For example, between two adjacent broken divided metal2 GBL lines of GBL_J−1 and GBL_J, a GBL-divided transistor is a 1-poly NMOS transistor MGBLp with its gate tied to DIV_EN[J−1]. A LBL-divided 1-poly NMOS transistor MDBLp with its gate tied to DI_1_1[N] is to connect two adjacent broken metal1 LBL lines, LBL_1_1_1 and LBL_1_1_2. To precharge or discharge each LBL line or capacitor, it goes through each corresponding LBLps line through a 3D NMOS transistor of MLBLs. All other circuits such as two-sided SA and 3D NAND Strings are kept the same as the traditional U-shaped vertical NAND flash technology.

FIG. **19** is a simplified circuit diagram showing a 3D HiNAND2 array with 1-transistor divided-GBL/LBL device and with straight vertical-channel String according to still another embodiment of the present invention. As shown, the 3D HiNAND2 array with broken GBL and broken LBL scheme has a different MU String structure. The two String-select transistors with one on top and one on bottom. But the way of dividing GBL and LBL are similar to previous embodiments shown in FIG. **17** and FIG. **18**.

In this embodiment, both GBL and LBL divided devices are made of 1-poly NMOS transistors such as MGBLp and MDBLp. The 1-poly MGBLp transistor has its gate tied to signal DIV_EN for forming a broken metal2 GBL structure and the 1-poly MDBLp transistor has its gate tied to DI_1 for forming a broken metal1 LBL structure.

As shown, the second String-source select transistor is not at the top of String, Instead, it is formed at the bottom of the

String with its gate tied to signal GSL[1] and its source tied to signal CSL[1]. In this case, the number of memory cells MC in this 3D HiNAND String is halved as compared to the String sizes shown in FIGS. **16-18**.

FIG. **20** is a simplified circuit diagram showing a 3D HiNAND2 array compatible with vertical-gate NAND cell string scheme according to an alternative specific embodiment of the present invention. As shown, the 3D HiNAND2 array circuit includes a similar 2-level segmented or broken GBL and LBL structure based on a vertical-gate 3D NAND flash technology. Examples of traditional vertical-gate lateral-channel 3D NAND architecture can be referred to U.S. Pat. No. 8,148,763, U.S. Pat. No. 8,437,192, and U.S. Patent Application Publication No. 2012/0051137 A1, incorporated all for references.

Similarly, the broken LBL uses the same 8-transistor divided LBL device with their 8 gates tied to each common DI_1_1 signal line. As shown in FIG. **20**, each long GBL has been divided into a plurality of broken GBLs (such as GBL_1 to GBL_J for total J broken GBL lines) or capacitors by inserting eight 1-poly NMOS transistors, MGBLp, in a vertical column in parallel with drain and source connected to two adjacent GBL lines or capacitors and with 8 gates commonly tied to a signal DIV_EN_[J−1]. This is implemented similar to but slightly different from the previous embodiment shown in FIG. **19**. In this embodiment, the vertical-gate 3D structure is adopted, thus multiple-layer of transistors are easier to stack on top of one another for eight stories than the previous embodiment with vertical-channel 3D structure. In a specific embodiment, the 3D HiNAND array with vertical-gate can be implemented by using traditional platform without process changes. Simply, the GBL divided devices of MGBLp associated with the novel 3D HiNAND array are also made of compatible vertical-gate structure on the same silicon die.

Since eight MGBLp transistors are formed in parallel between two adjacent GBL_J lines or capacitors, thus the effective resistance of total eight MGBLp becomes ⅛ of one MGBLp. As a result, the RC delay for each divided GBL becomes smaller 1/J as compared to one long unbroken GBL line when gate signal voltage of DIV_EN_J=Vread=6V or higher. As a result, the total RC delay of connecting all J GBL capacitors and J−1 resistors of MGBLp is almost same without degradation of using this broken GBL scheme as one long GBL capacitance without MGBLp resistance used in a prior-art 3D NAND. But if the accessed MBs are near SA in physical layout, then the RC delay is much less than prior-art 3D NAND. As a result, a superior 3D HiNAND performance can be achieved based on a conventional vertical-gate 3D NAND design when the preferred broken 3D GBL structure is adopted therein.

Similarly, a broken LBL scheme can be also used for this 3D HiNAND Flash array with a vertical-gate platform. In particular the broken LBL line can be achieved by using 8-Transistor LBL-divided devices MDBLp connected in parallel with their 8 gates tied to respective common signal DI_1_1[L−1].

Besides, one end of each broken LBL is connected to one corresponding power line of LBLps_1_n though eight MLBLs with eight gates tied to one common signal of PRE_1_n. Similarly, one end of each broken GBL can also be connected to a corresponding power line of a GBLps bus. Alternatively, because each broken GBL capacitor voltage can be precharged or discharged through the corresponding LBLps_1_n, in this 3D HiNAND2 structure with vertical-gate platform. This GBLps line can be saved to reduce the silicon area.

In addition, each preferred broken GBL is connected to two SA placed in far-left and far-right ends. As explained in 2D NAND Flash with two-ended SA per one broken GBL, the fastest and lowest power-consumption GBLs are two, rather than one. Thus more flexibility of the 3D HiNAND2 array can be planned for faster and superior reliability NAND operation.

All the basic 3D HiNAND cell Program, Erase, and Read conditions in this vertical-gate technology are fully compatible with traditional 3D NAND operating conditions. The major attributions of this vertical-gate 3D HiNAND array are to use short and light broken-GBL and broken-LBL schemes to replace long and heavy un-broken GBL and LBL so that fast simultaneous Multiple-WL and All-BL Program, Read, and Program-Verify operations can be achieved.

FIG. **21** is a diagram showing six decoding logics for eight layers of the vertical String-selected transistors of the 3D vertical-gate HiNAND2 array structure of FIG. **20** according to a specific embodiment of the present invention. As shown, the GBL decoding scheme is executed through six GBL-select NMOS transistor connected in series with their six common gates tied to six control logics such as SS1B, SS1, SS2B, SS2, SS3B, SS3, and SS4B, SS4. These gate logic assignments are designed for 8-layer vertical-gate 3D NAND Strings GBL selections. The detail description of these gate logic assignments is kept the same as traditional ones for the vertical-gate 3D NAND architecture which can be found in U.S. Pat. No. 8,437,192, incorporated fully as references. Thus, the 3D HiNAND2 broken-GBL and broken LBL preferred schemes according to an embodiment of the present invention can still be implemented without change in the GBL-select scheme based on the traditional 3D NAND technology. Regardless of any new design approaches of GBL-select circuit, the 3D HiNAND2 scheme of the present invention can still be applied.

Throughout the specification, all the 3D HiNAND2 arrays proposed above (FIGS. **16-20**) have 2-sided SA and multiple-level broken-BL hierarchical structures. However, all of them can be turned into 3D HINAND2 arrays with 1-sided SA and multiple-level hierarchical BL structures so that a faster and less-power consumption of the preferred Charge-sharing, Precharge and Discharge Read and Verify operations can be performed.

The detailed operations of the vertical-gate 3D NAND flash using the HiNAND2 BL-hierarchical structure of the present invention for Multiple-WL and All-BL Read, Program and Program-Verify operations would be same as the previous descriptions for the 2D HiNAND2 flash array and the 3D HINAND2 array with U-shaped vertical-channel String.

Although the above has been illustrated according to specific embodiments, there can be other modifications, alternatives, and variations. It is understood that the examples and embodiments described herein are for illustrative purposes only and that various modifications or changes in light thereof will be suggested to persons skilled in the art and are to be included within the spirit and purview of this application and scope of the appended claims.

What is claimed is:

1. A high-density NAND (HiNAND) flash memory array with 1-level broken-bit-line hierarchical architecture for performing multiple-WL All-BL simultaneous Program, Program-Verify, and Read operations, the HiNAND flash memory array comprising:

a NAND memory array arranged in a first plurality of Groups per N columns respectively associated with N global bit lines (GBLs) parallel to each other cascaded

in a row, the N GBLs being respectively divided into the first plurality of broken-GBLs separated/connected from/to each other correspondingly by a row of N Group-divided devices, each Group being further divided into a second plurality of Segments such that the N broken-GBLs associated with the Group are respectively divided into the second plurality of N segmented-GBLs separated/connected from/to each other correspondingly by a row of N Segment-divided devices, each Segment including multiple Blocks, each Block including M Pages of NAND memory cells forming into N Strings, each String having M NAND memory cells connected in series capped by a first String-select device coupled to the corresponding segmented-GBL and a second String-select device coupled to a common source line in parallel to a word line (WL) of each Page;

a row of N precharge pull-down devices per Segment with N individual drains and sources respectively coupled between the N segmented-GBLs associated to the Segment and a precharge-power line in parallel to the common source line connected to a voltage decoder for precharging and discharging all the N segmented-GBLs in the Segment selected from any Group independent from other Segments in all Groups;

a page buffer having N-bit ports to couple with the N GBLs, the page buffer comprising at least a first Data Register coupled with a first Cache Register located at a first end of the first plurality of columns near a first one of the first plurality of Groups of the array;

wherein each row of N Group-divided devices is commonly gated by one of first control signals, each row of N Segment-divided devices is commonly gated by one of second control signals, each row of N precharge pull-down devices per Segment is commonly gated by one of third control signals, multiple Pages across the NAND memory array can be selected on one-page-per-block basis from multiple dispersed Blocks in multiple different Segments of one or more Groups for at least partially performing simultaneous Program, Program-Verify, and Read operations.

2. The HiNAND flash memory array of claim **1** wherein each Group-divided device, each Segment-divided device, each precharge pull-down device, each first String-select device, and each second String-select device are substantially a same type transistor as an 1-poly NMOS low-voltage (LV) transistor operating under a low-voltage Vdd precharge scheme.

3. The HiNAND flash memory array of claim **1** wherein each Group-divided device, each Segment-divided device, each precharge pull-down device, each first String-select device, and each second String-select device are substantially a same type transistor as an 1-poly NMOS medium-high-voltage (MHV) transistor operating under a MHV $V_{inhibit}$ ~7V precharge scheme.

4. The HiNAND flash memory array of claim **1** wherein M is selected from 8, 32, 64, or other integer numbers depending on NAND design density and N is 65,536 for 8 KB Page size and upgradeable for a larger Page size.

5. The HiNAND flash memory array of claim **1** wherein each NAND memory cell is configured to store 2-state SLC, or 4-state MLC, or 8-state TLC, or 16-state XLC, or even 256-state analog values.

6. The HiNAND flash memory array of claim **1** wherein each broken-GBL comprises a metal line having a parasitic capacitor served as a unit for storing precharged voltages during all-GBL Read operation using a charge-sharing scheme or storing GBL program and program-inhibit voltages during All-GBL program operation.

7. The HiNAND flash memory array of claim **3** wherein each precharge-power line is a metal line laid in parallel to the common source line at a same level below the GBL and is configured for precharging each corresponding segmented-GBL to a voltage level of low-voltage Vdd up to a MHV $V_{inhibit}$ of ~7V or discharging to a designated voltage level below the precharged voltage level.

8. The HiNAND flash memory array of claim **1** wherein multiple precharge-power lines respectively associated with multiple Segments from one or more Groups are configured to perform a simultaneous precharge operation independently by setting corresponding first control signals, corresponding second control signals, and corresponding third control signals to predetermined voltages for performing simultaneous multiple-WL and all-BL Read operation on the basis of one Page per one Segment per one Group.

9. The HiNAND flash memory array of claim **1** wherein each segmented-GBL comprises a metal line parasitic capacitor unit configured to be a dynamic cache register for storing temporary program page data during simultaneous multiple-WL and all-BL Program operation.

10. The HiNAND flash memory array of claim **9** wherein multiple segmented-GBL metal line parasitic capacitor units associated with dispersed Blocks in different Segments of one or more Groups are configured to independently latch and trap a LV system-operation voltage Vdd for program-inhibit and a Vss voltage or a voltage less than Vdd-Vt for program by directly coupling via the N GBLs from the page buffer with one WL page data pattern of Vdd for program-inhibit and Vss or a voltage less than Vdd-Vt for program, wherein Vt is a threshold voltage of the precharge pull-down device, for executing a simultaneous All-GBL Program operation based on a self-boosting-program-inhibit scheme.

11. The HiNAND flash memory array of claim **10** wherein multiple segmented-GBL metal line parasitic capacitor units associated with dispersed Blocks in different Segments of one or more Groups are configured to independently latch and trap a $V_{inhibit}$ voltage above Vdd up to about 7V for program-inhibit and Vss voltage or a voltage less than Vdd-Vt for program by precharging each of N Segmented-GBLs to the $V_{inhibit}$ voltage from the precharge-power line for each selected Segment, and coupling via the N GBLs from the page buffer with a WL page data pattern of Vdd for program-inhibit and Vss or a voltage less than Vdd-Vt for program, for executing a simultaneous All-GBL Program operation on multiple selected Pages respectively in the multiple dispersed Blocks based on the corresponding one WL page data pattern using a non-self-boosting-program-inhibit scheme.

12. The HiNAND flash memory array of claim **1** comprising a 3D flash array structure with each String of memory cells being stacked in a third direction in a straight vertical-channel configuration, or U-shaped vertical-channel configuration, or vertical-gate lateral-channel configuration, the third direction being perpendicular to both the first direction and the second direction, wherein each Group-divided device, each Segment-divided device, each pull-down device, each first String-select device, and each second String-select device associated with a vertical-channel 3D NAND String configuration is selected from a one-transistor device of a same type NMOS 1-poly transistor, a two-transistor device having two NMOS 1-poly transistors with a common gate, and a three-transistor device having two NMOS 1-poly transistors with a common gate plus a third NMOS 2-poly transistor.

13. A high-density NAND (HiNAND) flash memory array with 2-level broken-bit-line hierarchical architecture for performing multiple-WL All-BL simultaneous Program, Program-Verify, and Read operations, the HiNAND flash memory array comprising:

a NAND memory array arranged in a first plurality of Groups per N columns respectively associated with N global bit lines (GBLs) laid in parallel at a first level through all Groups and N local bit lines (LBLs) laid at a second level below the first level parallel to the GBLs through only a Segment of each Group, the N GBLs being respectively divided into the first plurality of N broken-GBLs separated/connected from/to each other correspondingly by a row of N Group-divided devices, each Group comprising a second plurality of Segments with each Segment being divided into a third plurality of Sub-segments such that the N LBLs per Segment are respectively divided into the third plurality of N broken-LBLs separated/connected from/to each other correspondingly by a row of N Segment-divided devices, each Sub-segment including multiple Blocks, each Block including M Pages of NAND memory cells forming into N Strings, each String having M NAND memory cells connected in series capped by a first String-select device coupled to a broken-LBL associated with the Sub-segment and a second String-select device coupled to a common source line in parallel to a word line (WL) of each Page;

a row of N Segment-select devices respectively coupled the N broken-GBLs per Group at the first level to the N LBLs per Segment in the Group at the second level;

a row of N precharge pull-down devices respectively coupled the N broken-LBLs per Sub-segment to a precharge-power line laid at a third level below the second level for precharging and discharging all the N broken-LBLs in the Sub-segment selected from any Segment of any Group independent from other Segments in all Groups; and

a page buffer having N-bit ports to couple with the N GBLs, the page buffer comprising at least a first Data Register coupled with a first Cache Register located a first one of the first plurality of Groups;

wherein each row of N GBL-divided devices is gated by one of first control signals, each row of N Segment-divided devices is gated by one of second control signals, each row of N Segment-select devices is controlled by one of third control signals, each row of N precharge pull-down devices is controlled by one of fourth control signals, multiple Pages with respective multiple WLs and all GBLs across the array can be selected on one-page-per-block basis from multiple dispersed Blocks in multiple different Sub-segments of one or more Segments of one or more Groups for at least partially performing simultaneous Program, Program-Verify, and Read operations.

14. The HiNAND flash memory array of claim 13 wherein each Group-divided device, each Segment-divided device, and each Segment-select device, and each precharge pull-down device are substantially a same type transistor as an 1-poly NMOS low-voltage (LV) transistor operating under a low-voltage Vdd precharge scheme.

15. The HiNAND flash memory array of claim 13 wherein each Group-divided device, each Segment-divided device, and each Segment-select device, and each precharge pull-down device are substantially a same type transistor as an 1-poly NMOS medium-high-voltage (MHV) transistor operating under a MHV $V_{inhibit}$ ~7V precharge scheme.

16. The HiNAND flash memory array of claim 13 wherein each NAND memory cell is configured to store 2-state SLC, or 4-state MLC, or 8-state TLC, or 16-state XLC, or even 256-state analog values.

17. The HiNAND flash memory array of claim 15 wherein each precharge-power line associated with each Sub-Segment in a Segment is commonly connected to a metal line coupled to a voltage decoder for precharging all or partial N broken-LBLs of the selected Sub-segment of a Segment simultaneously to a voltage level of a low-voltage Vdd up to medium-high-voltage $V_{inhibit}$ of ~7V or discharging to a designated voltage level below the precharged voltage level.

18. The HiNAND flash memory array of claim 13 wherein multiple precharge-power lines respectively associated with multiple Sub-segments from multiple Segments of one or more Groups are configured to perform a simultaneous precharge operation independently by setting corresponding first control signals, corresponding second control signals, corresponding third control signals, and corresponding fourth control signals to predetermined voltages for performing simultaneous multiple-WL and all-BL Read operation on the basis of one Page per one Group.

19. The HiNAND flash memory array of claim 13 wherein each broken-LBL comprises a metal line parasitic capacitor unit configured to be a dynamic cache register for storing temporary program page data during simultaneous multiple-WL and all-BL Program operation.

20. The HiNAND flash memory array of claim 13 wherein multiple broken-LBL metal line parasitic capacitor units associated with multiple dispersed Sub-segments in one or more Segments in one or more Groups are configured to be precharged simultaneously to a predetermined voltage above a system voltage Vdd up to 7V for performing multiple-WL All-BL simultaneous Program, Program-Verify, and Read operations rather than charging through a full length of the GBL from the page buffer.

21. The HiNAND flash memory array of claim 13 wherein multiple broken-LBL metal line parasitic capacitor units associated with multiple dispersed Blocks in different Sub-segments of one or more Segments of one or more Groups are configured to independently latch and trap a LV system-operation voltage Vdd for program-inhibit and a Vss voltage or a voltage less than Vdd-Vt for program by directly coupling via the N GBLs from the page buffer with one WL page data pattern of Vdd for program-inhibit and Vss or a voltage less than Vdd-Vt for program, wherein Vt is a threshold voltage of the precharge pull-down device, for executing a simultaneous All-GBL Program operation based on a self-boosting-program-inhibit scheme.

22. The HiNAND flash memory array of claim 13 wherein multiple broken-LBL metal line parasitic capacitor units associated with multiple dispersed Blocks in different Segments of one or more Groups are configured to independently latch and trap a $V_{inhibit}$ voltage above Vdd up to about 7V for program-inhibit and Vss voltage or a voltage less than Vdd-Vt for program by precharging each of N broken-LBLs to the $V_{inhibit}$ voltage from the precharge-power line for each selected Sub-segment, and coupling via the N GBLs from the page buffer with a WL page data pattern of Vdd for program-inhibit and Vss or a voltage less than Vdd-Vt for program, for executing a simultaneous All-GBL Program operation on multiple selected Pages respectively in the multiple dispersed Blocks based on the corresponding one WL page data pattern using a non-self-boosting-program-inhibit scheme.

23. The HiNAND flash memory array of claim **13** comprising a 3D flash array structure with each String of memory cells being stacked in a third direction in a straight vertical-channel configuration, or U-shaped vertical-channel configuration, or vertical-gate lateral-channel configuration, the third direction being perpendicular to both the first direction and the second direction, wherein each Group-divided device, each Segment-divided device, each pull-down device, each first String-select device, and each second String-select device associated with a vertical-channel 3D NAND String configuration is selected from a one-transistor device of a same type NMOS 1-poly transistor, a two-transistor device having two NMOS 1-poly transistors with a common gate, and a three-transistor device having two NMOS 1-poly transistors with a common gate plus a third NMOS 2-poly transistor.

24. The HiNAND flash memory array of claim **23** wherein each Group-divided device, each Segment-divided device, each pull-down device, each second String-select device associated with a n-layer vertical-gate 3D NAND String configuration is a n-transistor device having n NMOS 1-poly MHV transistors connected in parallel where n is number of cell layers of the vertical-gate 3D NAND String configuration in the third direction.

25. The HiNAND flash memory array of claim **23** wherein one or more dispersed Pages from K Blocks in different Segments of one or more Groups of the 3D flash array structure are configured to flexibly subject to a simultaneous Erase operation by at least setting all first control signals, all second control signals, all third control signals, and corresponding precharge-power line to Vdd voltage and turning on both the first String-select device and the second String-select device corresponding to each selected Block, then ramping those signals from the Vdd to a Vers voltage of 20V to use a gate-induced drain leakage (GIDL) scheme to induce hot-hole to erase trapped electrons in each memory cell of the whole corresponding Page, wherein K is selected from 16, 32, 64, or any integer number.

* * * * *