US009589978B1

(12) **United States Patent**
Yip

(10) **Patent No.: US 9,589,978 B1**
(45) **Date of Patent: Mar. 7, 2017**

(54) **MEMORY DEVICES WITH STAIRS IN A STAIRCASE COUPLED TO TIERS OF MEMORY CELLS AND TO PASS TRANSISTORS DIRECTLY UNDER THE STAIRCASE**

(71) Applicant: **MICRON TECHNOLOGY, INC.**, Boise, ID (US)

(72) Inventor: **Aaron S. Yip**, Los Gatos, CA (US)

(73) Assignee: **Micron Technology, Inc.**, Boise, ID (US)

(*) Notice: Subject to any disclaimer, the term of this patent is extended or adjusted under 35 U.S.C. 154(b) by 0 days.

(21) Appl. No.: **15/053,291**

(22) Filed: **Feb. 25, 2016**

(51) **Int. Cl.**
H01L 27/108 (2006.01)
H01L 27/115 (2006.01)
H01L 23/528 (2006.01)

(52) **U.S. Cl.**
CPC ***H01L 27/11573*** (2013.01); ***H01L 23/528*** (2013.01); ***H01L 27/11526*** (2013.01); ***H01L 27/11556*** (2013.01); ***H01L 27/11582*** (2013.01)

(58) **Field of Classification Search**
CPC H01L 27/11524; H01L 27/11529; H01L 27/1157; H01L 27/11273; H01L 27/2454; H01L 27/1153; H01L 29/66833; H01L 29/792
USPC 257/296, 314, 324, 260, 261, 300; 438/137, 138, 156, 192, 216, 266, 287
See application file for complete search history.

(56) **References Cited**

U.S. PATENT DOCUMENTS

2015/0001613 A1* 1/2015 Yip H01L 27/115 257/329

* cited by examiner

Primary Examiner — Jarrett Stark
Assistant Examiner — Shahed Ahmed
(74) *Attorney, Agent, or Firm* — Dicke, Billig & Czaja, PLLC

(57) **ABSTRACT**

In an example, a memory device includes a staircase comprising a flight of stairs and a plurality of pass transistors directly under the staircase. The stairs of the flight of stairs are respectively coupled to different tiers of memory cells, and a different pass transistor of the plurality of pass transistors is coupled to each of the stairs of the flight of stairs.

26 Claims, 12 Drawing Sheets

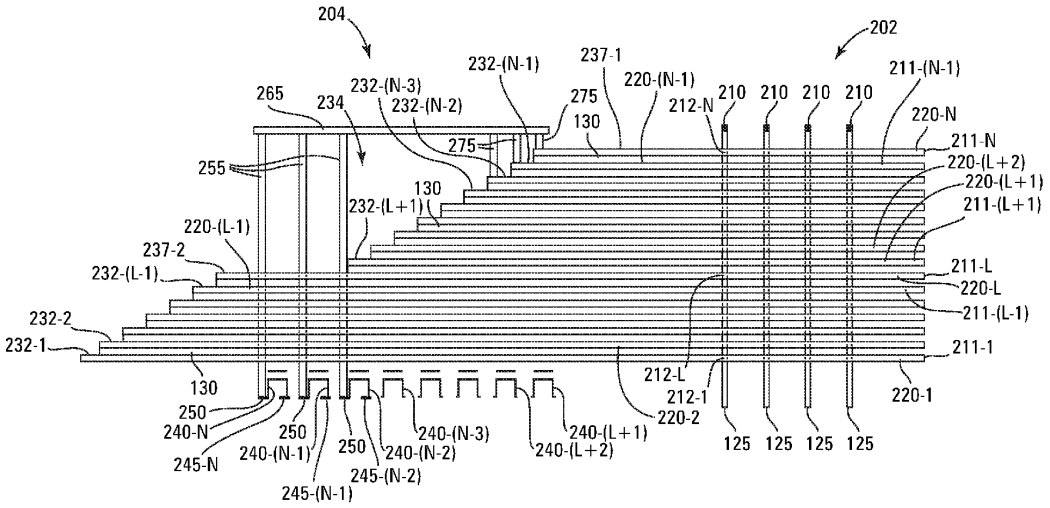

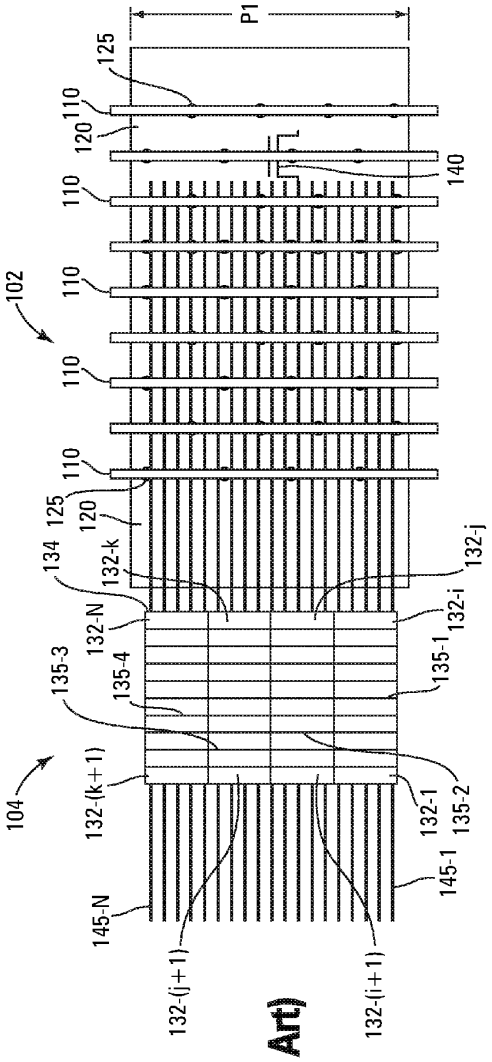

FIG. 1A
(Background Art)

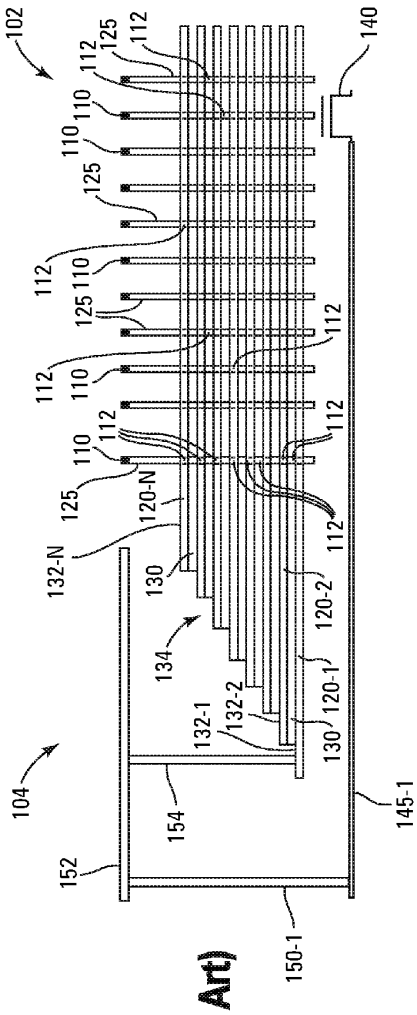

FIG. 1B
(Background Art)

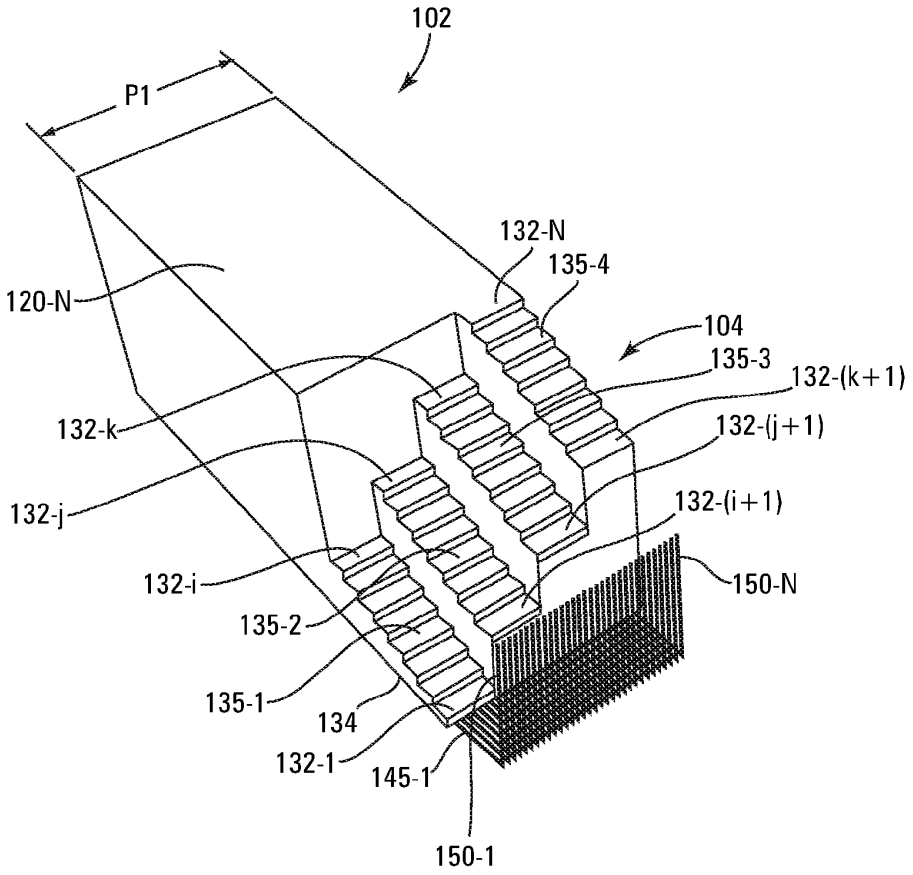

FIG. 1C
(Background Art)

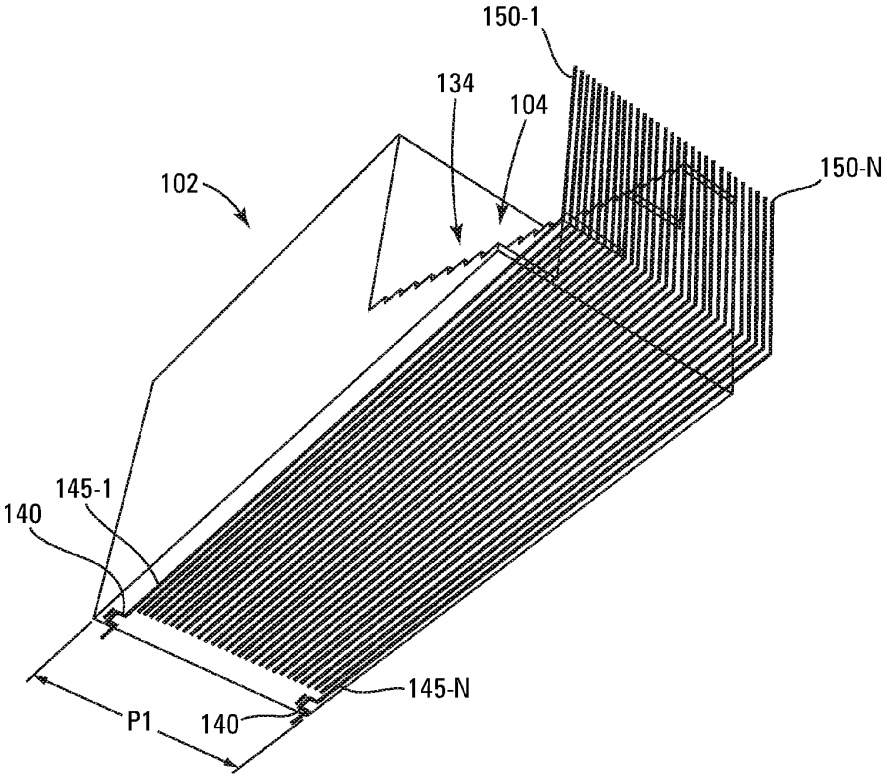

FIG. 1D
(Background Art)

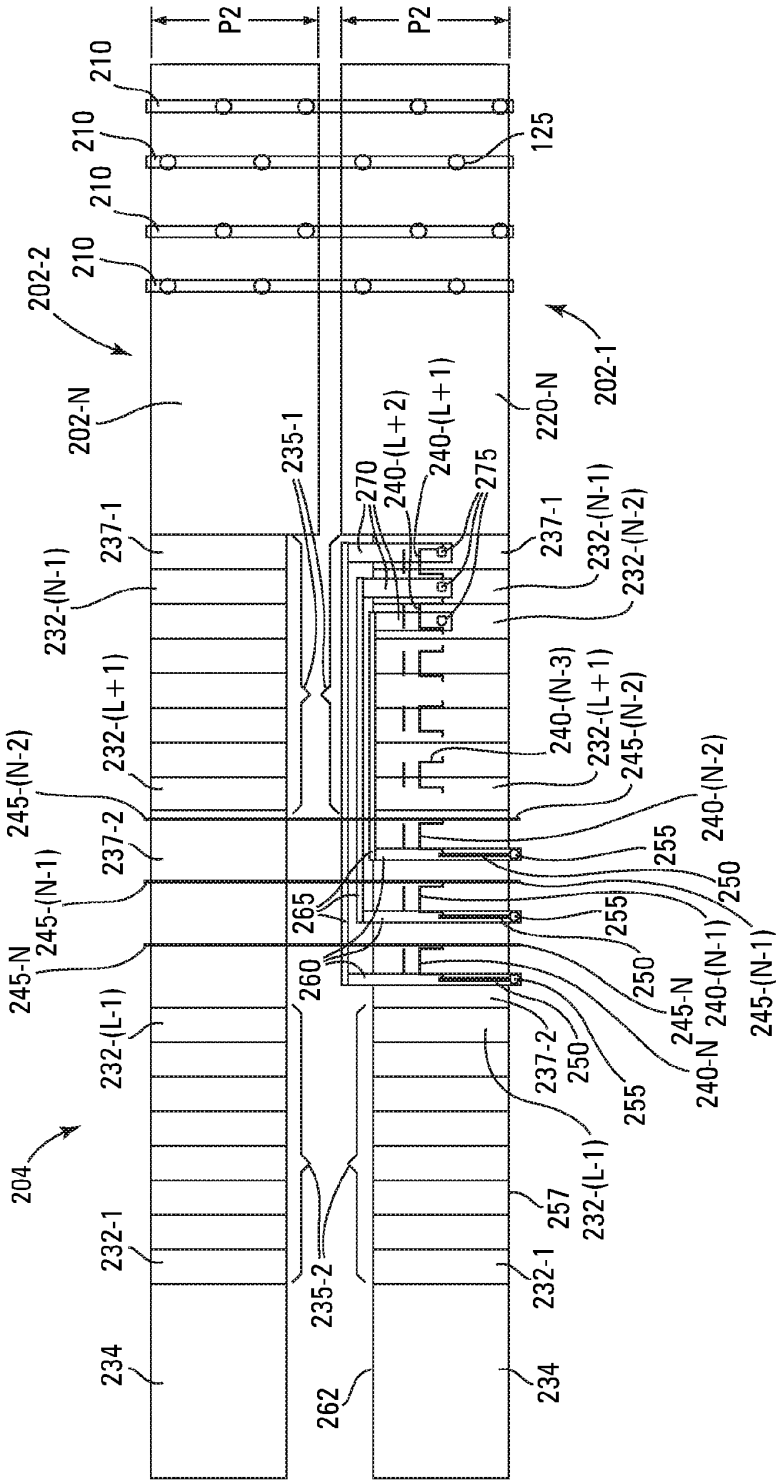
P2
P2
210
210
210
210
125
202-2
202-1
202-N
220-N
235-1
270
240-(L+2)
240-(L+1)
275
237-1
237-1
232-(N-1)
232-(N-2)
232-(N-1)
232-(L+1)
240-(N-3)
232-(L+1)
245-(N-2)
245-(N-2)
240-(N-2)
237-2
255
245-(N-1)
250
265
255
245-N
260
250
240-(N-1)
245-(N-1)
232-(L-1)
245-N
237-2
250
240-N
255
204
232-(L-1)
257
232-1
232-1
235-2
234
234
262

FIG. 2A

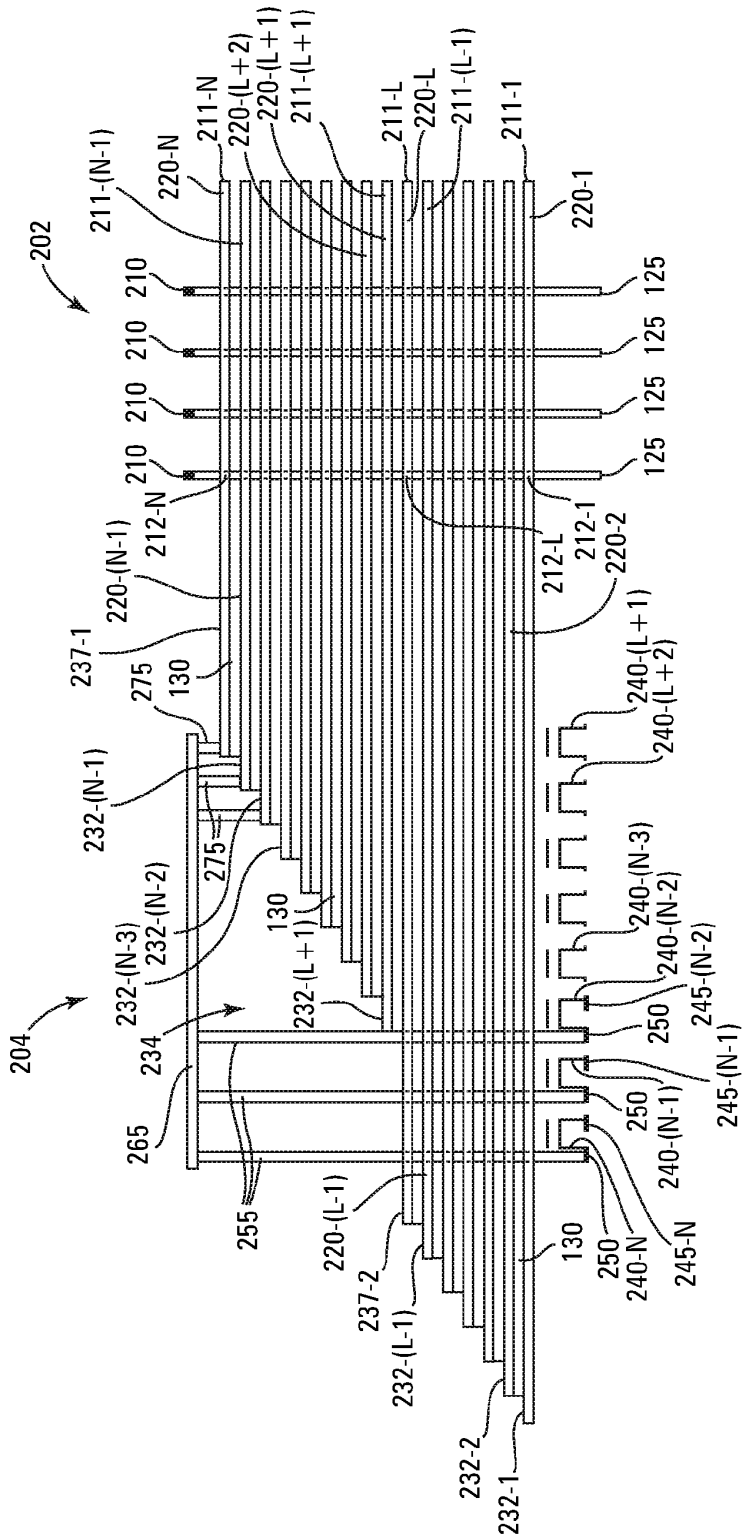
202
204
211-(N-1)
220-N
211-N
220-(L+2)
220-(L+1)
211-(L+1)
211-L
220-L
211-(L-1)
211-1
220-1
210
210
210
210
125
125
125
125
212-N
212-L
212-1
220-2
220-(N-1)
237-1
130
275
232-(N-1)
275
232-(N-2)
232-(N-3)
130
232-(L+1)
234
265
255
220-(L-1)
237-2
232-(L-1)
232-2
232-1
130
240-(L+1)
240-(L+2)
240-(N-3)
240-(N-2)
245-(N-2)
250
245-(N-1)
250
240-(N-1)
250
240-N
245-N

FIG. 2B

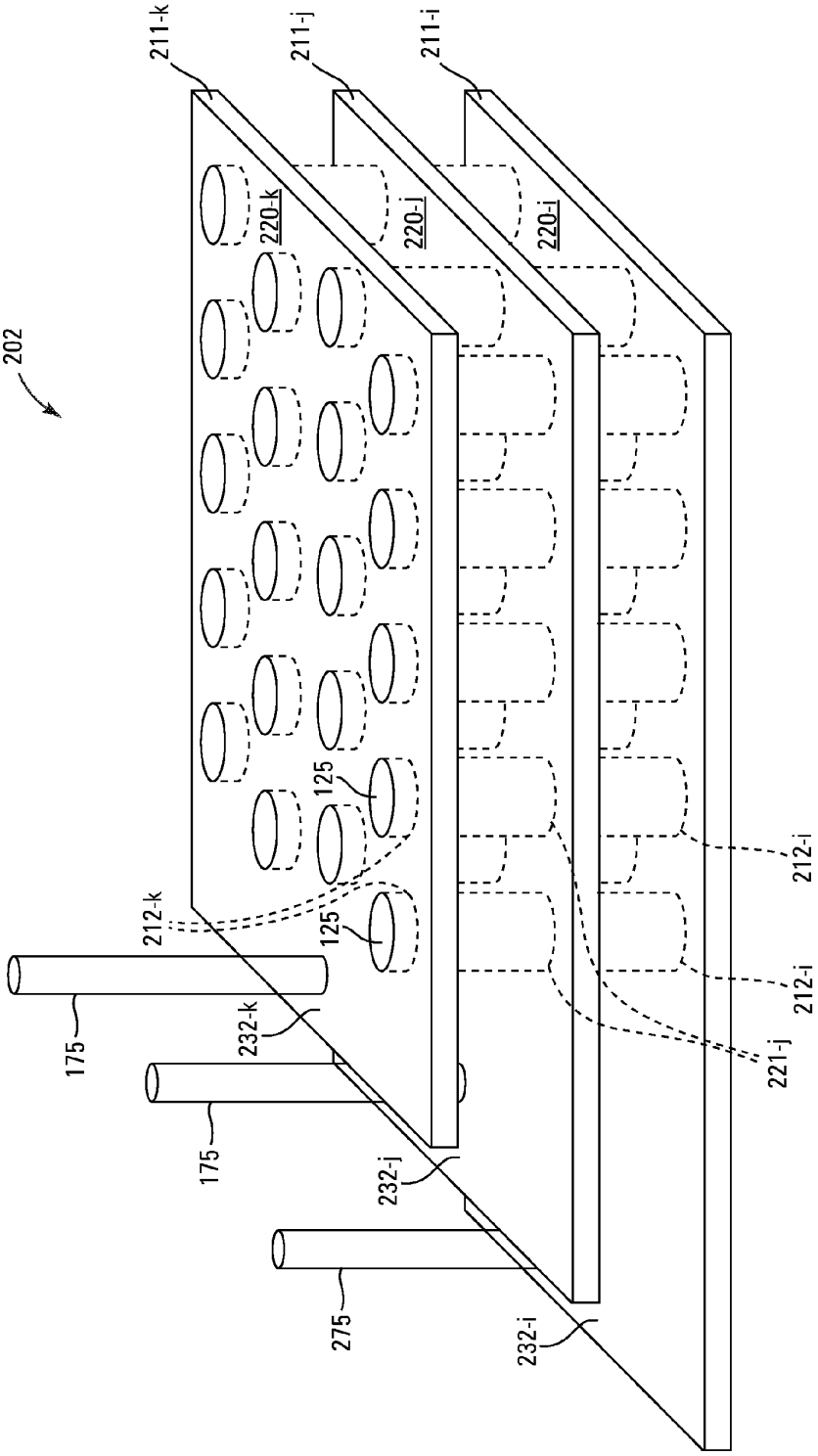
202
211-k
211-j
211-i
220-k
220-j
220-i
125
125
212-k
212-i
212-i
221-j
175
175
275
232-k
232-j
232-i

FIG. 2C

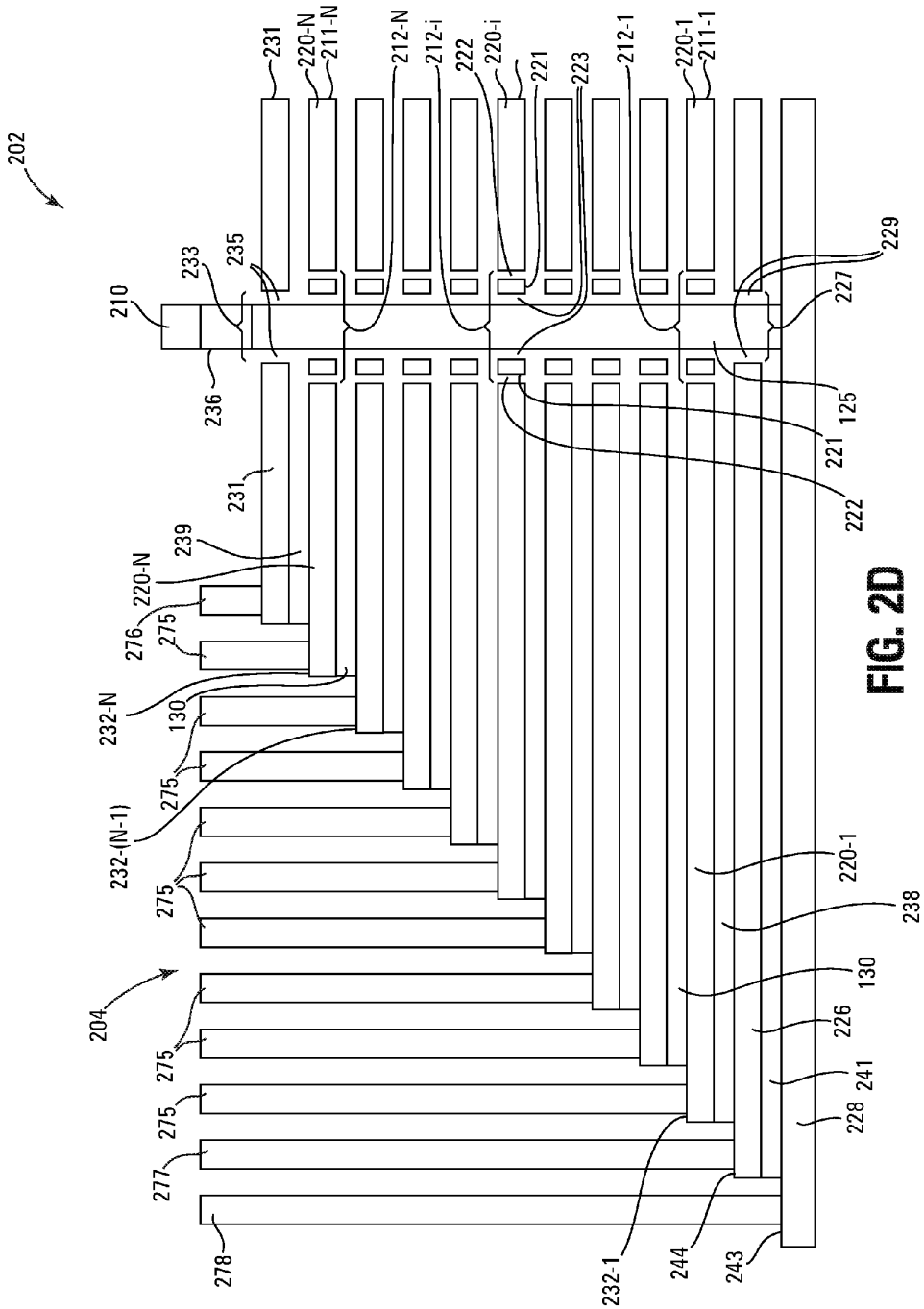
202
210
231
220-N
211-N
212-N
212-i
222
220-i
221
223
212-1
220-1
211-1
229
227
233
235
236
125
239
276
275
232-N
130
232-(N-1)
204
277
278
232-1
244
243
228
241
226
238

FIG. 2D

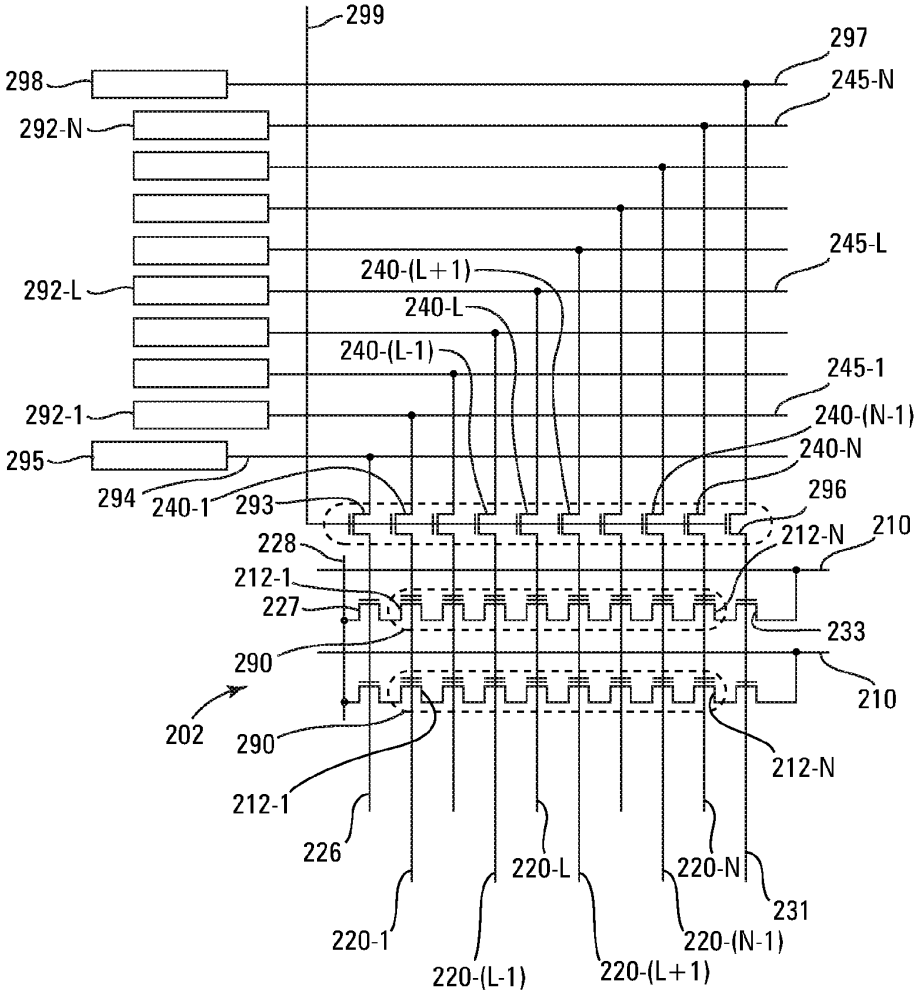
299
297
298
245-N
292-N
245-L
240-(L+1)
292-L
240-L
240-(L-1)
245-1
292-1
240-(N-1)
295
240-N
294
240-1
293
296
228
212-N
210
212-1
227
233
290
210
202
290
212-N
212-1
226
220-L
220-N
231
220-1
220-(N-1)
220-(L-1)
220-(L+1)

FIG. 2E

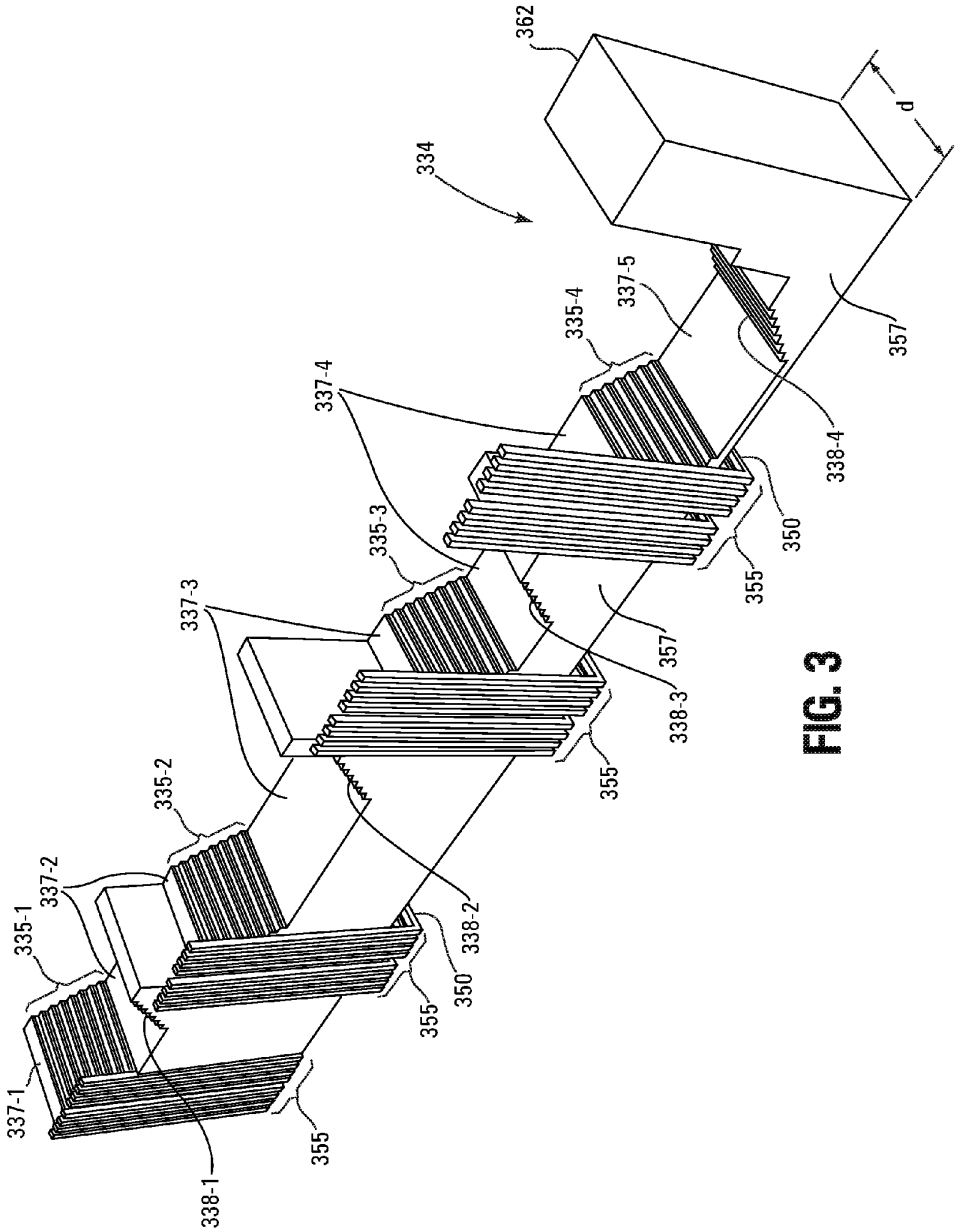
362
d
334
337-5
335-4
337-4
335-3
337-3
335-2
337-2
335-1
337-1
338-1
338-2
338-3
338-4
350
355
357

FIG. 3

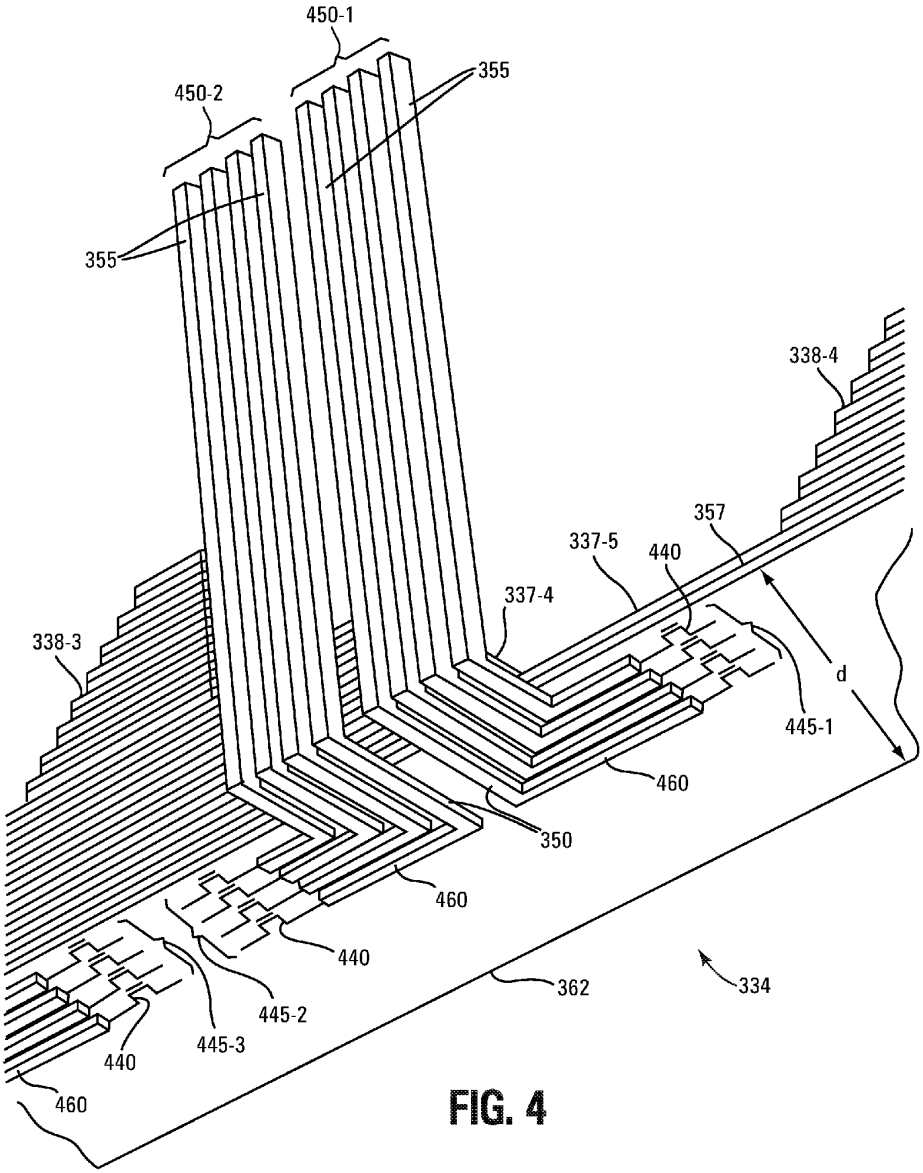
450-1
450-2
355
355
338-4
357
337-5
440
337-4
338-3
d
445-1
460
350
460
440
445-2
445-3
440
460
362
334

FIG. 4

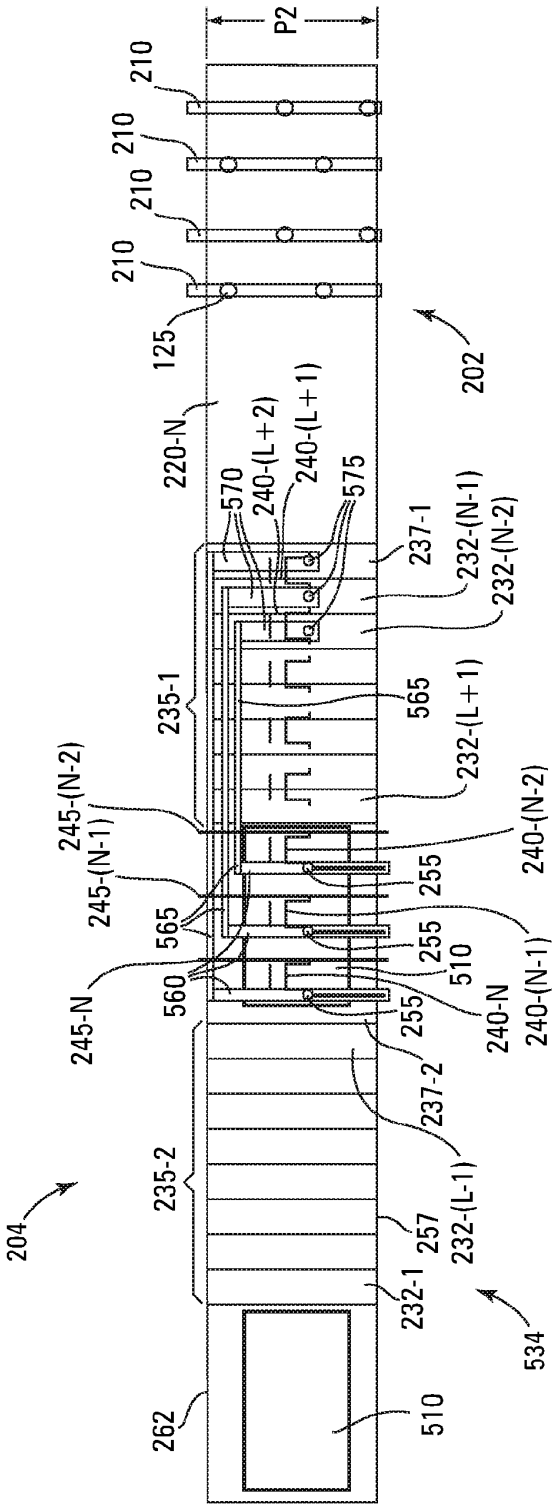
P2
210
210
210
210
125
202
220-N
570
240-(L+2)
240-(L+1)
575
237-1
232-(N-1)
232-(N-2)
235-1
565
232-(L+1)
245-(N-2)
240-(N-2)
245-(N-1)
255
565
255
510
240-(N-1)
245-N
560
240-N
255
237-2
235-2
232-(L-1)
204
257
232-1
534
262
510

FIG. 5

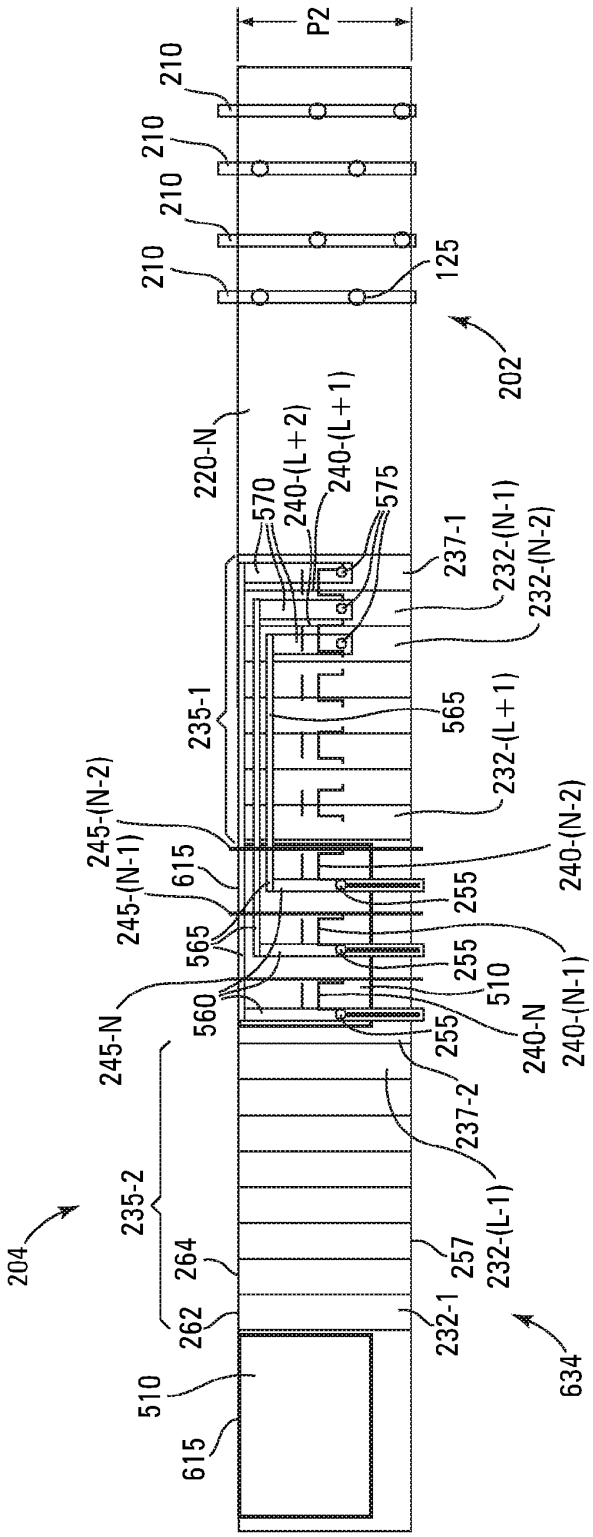
P2
210
210
210
210
125
202
220-N
570
240-(L+2)
240-(L+1)
575
237-1
232-(N-1)
232-(N-2)
235-1
565
232-(L+1)
245-(N-2)
240-(N-2)
245-(N-1)
615
255
245-(N-1)
565
255
510
245-N
560
240-N
240-(N-1)
255
237-2
235-2
232-(L-1)
204
264
257
262
232-1
634
510
615

FIG. 6

MEMORY DEVICES WITH STAIRS IN A STAIRCASE COUPLED TO TIERS OF MEMORY CELLS AND TO PASS TRANSISTORS DIRECTLY UNDER THE STAIRCASE

FIELD

The present disclosure relates generally to, memory devices, and, in particular, the present disclosure relates to memory devices with stairs in a staircase coupled to tiers of memory cells and to pass transistors directly under the staircase.

BACKGROUND

Memory devices are typically provided as internal, semiconductor, integrated circuits in computers or other electronic devices. There are many different types of memory, including random-access memory (RAM), read only memory (ROM), dynamic random access memory (DRAM), synchronous dynamic random access memory (SDRAM), and flash memory.

Flash memory devices (e.g., NAND, NOR, etc.) have developed into a popular source of non-volatile memory for a wide range of electronic applications. Non-volatile memory is memory that can retain its data values for some extended period without the application of power. Flash memory devices typically use a one-transistor memory cell that allows for high memory densities, high reliability, and low power consumption. Changes in threshold voltage of the cells, through programming (which is sometimes referred to as writing) of charge-storage structures (e.g., floating gates or charge traps) or other physical phenomena (e.g., phase change or polarization), determine the data value of each cell. Common uses for flash memory and other non-volatile memory include personal computers, personal digital assistants (PDAs), digital cameras, digital media players, digital recorders, games, appliances, vehicles, wireless devices, mobile telephones, and removable memory modules, and the uses for non-volatile memory continue to expand.

A NAND flash memory device is a common type of flash memory device, so called for the logical form in which the basic memory cell configuration is arranged. Typically, the array of memory cells for NAND flash memory devices is arranged such that the control gate of each memory cell of a row of the array is connected together to form an access line, such as a word line. Columns of the array include strings (often termed NAND strings) of memory cells connected together in series, source to drain, between a pair of select transistors, e.g., a source select transistor and a drain select transistor. Each source select transistor is connected to a source line, while each drain select transistor is connected to a data line, such as column bit line. A "column" refers to a group of memory cells that are commonly coupled to a local data line, such as a local bit line. It does not require any particular orientation or linear relationship, but instead refers to the logical relationship between memory cell and data line.

To meet the demand for higher capacity memories, designers continue to strive for increasing memory density (e.g., the number of memory cells in a given area of an integrated circuit die). One way to increase the density of memory devices is to form stacked memory arrays, e.g., often referred to as three-dimensional memory arrays.

The memory cells at a common location (e.g., at a common vertical level) in a stacked memory array, for example, may form a tier of memory cells. The memory cells in each tier might be coupled to one or more access lines, such as local access lines (e.g., local word lines), that are in turn selectively coupled to drivers by transistors, such as pass transistors. In some examples, the memory cells in each tier might be commonly coupled to a common assess line that might be referred to as an access plate.

Each access plate commonly coupled to a respective tier of memory cells may be coupled to a pass transistor by a routing line. For example, the pass transistors and routing lines coupled to the respective access plates might be under the stacked memory array. However, as the number of tiers, and thus the number of access plates, increases so does the number of pass transistors and routing lines. For example, the number of pass transistors and routing lines might increase until there is not enough room under stacked memory array to accommodate all of the pass transistors and routing lines, at which point the size of the stacked memory array might need to be increased to accommodate the extra pass transistors and routing lines thereunder.

For the reasons stated above, and for other reasons stated below which will become apparent to those skilled in the art upon reading and understanding the present specification, there is a need in the art for alternatives to existing pass transistor and/or routing circuitry configurations in memory devices with stacked memory arrays.

BRIEF DESCRIPTION OF THE DRAWINGS

FIG. **1**A is a top-down view of an example of staircase in a memory device that includes a stacked memory array, according to background art.

FIG. **1**B is an elevation view of an example of a portion of staircase in a memory device that includes a stacked memory array, according to background art.

FIG. **1**C is a top perspective view of an example of a staircase of a memory device, according to background art.

FIG. **1**D is a bottom perspective view of an example showing pass transistors under a stacked memory array, according to background art.

FIG. **2**A is a top-down view of an example of staircases in a memory device that includes a stacked memory array.

FIG. **2**B is an elevation view of an example of staircases in a memory device that includes a stacked memory array.

FIG. **2**C is perspective view of an example of a portion of a stacked memory block.

FIG. **2**D is a cross-sectional elevation view of an example of a portion of a stacked memory block and a staircase.

FIG. **2**E is a schematic diagram of an example illustrating circuitry that includes pass transistors.

FIG. **3** is a top perspective view of an example of a staircase of a memory device that includes a stacked memory array.

FIG. **4** is a bottom perspective view of an example of a portion of a staircase of a memory device.

FIG. **5** is a top-down view of another example of a portion of a staircase of a memory device that includes a stacked memory array.

FIG. **6** is a top-down view of another example of a staircase of a memory device that includes a stacked memory array.

DETAILED DESCRIPTION

In the following detailed description, reference is made to the accompanying drawings that form a part hereof, and in which is shown, by way of illustration, specific examples. In

the drawings, like numerals describe substantially similar components throughout the several views. Other examples may be utilized and structural, logical, and electrical changes may be made without departing from the scope of the present disclosure. The following detailed description is, therefore, not to be taken in a limiting sense.

The term semiconductor can refer to, for example, a layer of material, a wafer, or a substrate, and includes any base semiconductor structure. "Semiconductor" is to be understood as including silicon-on-sapphire (SOS) technology, silicon-on-insulator (SOI) technology, thin film transistor (TFT) technology, doped and undoped semiconductors, epitaxial layers of a silicon supported by a base semiconductor structure, as well as other semiconductor structures well known to one skilled in the art. Furthermore, when reference is made to a semiconductor in the following description, previous process steps may have been utilized to form regions/junctions in the base semiconductor structure, and the term semiconductor can include the underlying layers containing such regions/junctions.

FIG. **1**A is a top-down view of an example of a portion of a memory device that includes a stacked (e.g., three-dimensional) memory array, according to background art. For example, the memory array might include a block **102** of memory cells, e.g., that may be erased concurrently, and a periphery **104**. As used herein, multiple acts being performed concurrently will mean that each of these acts is performed for a respective time period, and each of these respective time periods overlaps, in part or in whole, with each of the remaining respective time periods. In other words, those acts are concurrently performed for at least some period of time.

FIG. **1**B is an elevation view of an example of a portion of a memory device, e.g., taken along a direction of data lines **110**, e.g., bit lines, in FIG. **1**A, according to background art. FIG. **1**C is a top perspective view of an example of a portion of a memory device, according to background art. FIG. **1**D is a bottom perspective view of an example of a portion of a memory device, according to background art.

Block **102** may include a plurality of tiers of memory cells **112** (FIG. **1**B), where the tiers of memory cells **112** are respectively a different levels, e.g., vertical levels. The term "vertical" may be defined, for example, as a direction that is perpendicular to a base structure, such as a surface of an integrated circuit die. It should be recognized the term vertical takes into account variations from "exactly" vertical due to routine manufacturing and/or assembly variations and that one of ordinary skill in the art would know what is meant by the term vertical.

The memory cells **112** in each tier may be at a common vertical level and may be commonly coupled to an access plate **120**, such as a word-line plate, at that common vertical level. For example, the memory cells **112** in respective ones of the tiers respectively at the different levels may be respectively commonly coupled to respective ones of access plates **120-1** to **120**-N. An access plate **120** might include a planar conductor to which the memory cells **112** in a corresponding tier are commonly coupled. Alternatively, an access plate **120** might refer to a plurality of shorted-together access lines (e.g., word lines), where respective portions (e.g., groupings) of the memory cells **112** in a corresponding tier are commonly coupled to respective ones of the shorted-together access lines.

The memory cells **112** in a tier may be located at intersections of the access plate **120** for that tier and a plurality of structures (e.g., vertical structures) **125**. Each structure **125** might include a vertical semiconductor (e.g., forming a core of the respective structure **125**), such as a pillar, and a charge-storage structure adjacent to (e.g., on) the semiconductor. Note that an access plate **120** may be coupled to or include a control gate of a memory cell **112** at each intersection of that access plate **120** and a structure **125**.

In some examples, the semiconductor might include silicon that might be conductively doped to have a p-type conductivity or an n-type conductivity, and the charge-storage structure might include a charge trap or a floating gate. Other structures capable of indicating a data state through changes in threshold voltage might also be used.

A plurality of access plates **120** intersecting a structure **125** at different vertical levels might define a vertical string of series-coupled memory cells **112**. That is, for example, the memory cells **112** in a string may respectively be at the vertical levels of the access plates **120**. For example, a string of series-coupled memory cells **112** might include one memory cell from each tier coupled to one of the access plates **120** corresponding to that tier. A string of memory cells **112** might be selectively coupled to a data line **110**, e.g., by a select transistor, such as a drain select transistor (not shown), that is coupled to an end of the string of memory cells **112** and to the data line **110**. The string of memory cells **112** might also be selectively coupled to a source (not shown), e.g., by a select transistor, such as a source select transistor (not shown), that is coupled to an opposite end of the string of memory cells **112** and to the source. The number of access plates **120** may be equal to the number of memory cells in a string of series-coupled memory cells **112**, for example.

The access plates **120** might be electrically isolated and separated from each other, for example. That is, for example, a dielectric **130**, such as oxide and/or nitride, might be between the access plates **120**, as shown in FIG. **1**B.

Access plates **120-1** to **120**-N may respectively extend into periphery **104** by different distances, as shown in FIG. **1**B. For example, the distance by which an access plate **120** extends into periphery **104** may decrease as the vertical level of the access plate **120** increases. For example, the distances by which access plates **120-1** to **120**-N extend into periphery **104** may respectively decrease.

A portion of an access plate that extends beyond an end of the access plate at the next vertical level defines a step **132**, e.g., a landing pad for a contact. For example, the portion of access plate **120-1** that extends beyond the end of access plate **120-2** defines a step **132-1**. Each access plate **120**, for example, may have a portion (e.g., an extension) that forms (e.g., corresponds to) a step (e.g., a stair) **132**. For example, the steps **132-1** to **132**-N shown in FIGS. **1**A, **1**B, and **1**C may respectively be portions of access plates **120-1** to **120**-N. For example, a staircase **134** may include the steps **132-1** to **132**-N, and periphery **104** may include staircase **134**.

As shown in FIGS. **1**A and **1**C, steps (e.g., stairs) **132-1** to **132**-*i* may form a group **135-1** of the steps **132-1** to **132**-*i*, such as a flight of stairs **132-1** to **132**-*i*; steps **132**-(*i*+1) to **132**-*j* may form a group **135-2** of the steps **132**-(*i*+1) to **132**-*j*, such as a flight of stairs **132**-(*i*+1) to **132**-*j*; steps **132**-(*j*+1) to **132**-*k* may form a group **135-3** of the steps **132**-(*j*+1) to **132**-*k*, such as a flight of stairs **132**-(*j*+1) to **132**-*k*; and steps **132**-(*k*+1) to **132**-N may form a group **135-4** of the steps **132**-(*k*+1) to **132**-N, such as a flight of stairs **132**-(*k*+1) to **132**-N. For example, the groups **135-1** to **135-4** may be distributed, e.g., side by side, across a pitch P**1** of block **102**, as shown in FIGS. **1**A and **1**C, where the pitch P**1** (e.g., the block pitch P**1**) is a distance across the block in the direction of the data lines **110**, as shown in FIG. **1**A.

Since the number of access plates **120** may be equal to the number of memory cells **112** in a string of series-coupled memory cells **112**, as the number of memory cells **112** in a string of series-coupled memory cells **112** increases, the number of steps may increase accordingly. However, the block pitch P**1** may be insufficient to accommodate the increased number of steps, e.g., in the side-by-side arrangement shown in FIG. **1**C. Therefore, for example, the block pitch P**1**, and thus the size of block **102**, might need to be increased. Such an increase, could cause the size of the access plates **120** to increase, e.g., causing the capacitance of access plates **120** to increase. This could result in increased power requirements for driving the access plates **120** that could impede performance of the memory device.

Each of the steps **132**, and thus each of the access plates **120**, may be coupled to a pass transistor **140** by a routing line **145**, where representative pass transistors **140** are shown in FIGS. **1**A, **1**B, and **1**D. For example, respective ones of the steps **132**, and thus respective ones of the access plates **120**, may be respectively coupled to respective ones of a plurality pass transistors **140** by respective ones of a plurality routing lines **145**. For example, respective ones of the routing lines **145-1** to **145**-N may be respectively coupled to respective ones of the access plates **120-1** to **120**-N at respective ones of the steps **132-1** to **132**-N. Respective ones of the routing lines **145-1** to **145**-N may be respectively coupled to respective ones of the plurality pass transistors **140**.

Routing lines **145-1** to **145**-N may extend in a direction that is transverse (e.g., perpendicular) to the direction of data lines **110**, as shown in FIG. **1**A. It should be recognized the term perpendicular takes into account variations from "exactly" perpendicular due to routine manufacturing and/or assembly variations and that one of ordinary skill in the art would know what is meant by the term perpendicular.

A routing line **145**, such as the routing line **145-1**, may be coupled to a respective one of the steps **132-1** to **132**-N, such as step **132-1**, and thus a respective one of the access plates **120-1** to **120**-N, such as access plate **120-1**, by a vertical contact **150-1**, a connector **152**, and a contact **154**, as shown in FIG. **1**B. For example, contact **150-1** may be coupled to access plate **120-1** and to connector **152** that may be at the same vertical level as the data lines **110**. That is, for example, contact **150-1** may extend (e.g., vertically) between routing line **145-1** and connector **152**. Connector **152** may be coupled to contact **154** that may extend (e.g., vertically) between connector **152** and step **132-1**. Contact **154** may be coupled to step **132-1**. Vertical contacts **150-1** to **150**-N may be respectively coupled to routing lines **145-1** to **145**-N, as shown in FIG. **1**D.

Connector **152** may extend in a direction that is perpendicular to the direction of data lines **110**, as is apparent from FIG. **1**B that shows that connector **152** is parallel to routing line **145-1**. It should be recognized the term parallel takes into account variations from "exactly" parallel due to routine manufacturing and/or assembly variations and that one of ordinary skill in the art would know what is meant by the term parallel.

The pass transistors **140** may be coupled to drivers, such as access-line drivers, e.g., word-line drivers, (not shown). That is, for example, each pass transistor **140** may be configured to selectively couple a driver to an access plate **120**, and thus the tier of memory cells **112** commonly coupled to that access plate **120**.

The routing lines **145-1** to **145**-N may be under the memory block **102**, and thus the memory array, as shown in FIG. **1**D. For example, routing lines **145-1** to **145**-N may be distributed across the block pitch P**1** of block **102**, as shown in FIGS. **1**A and **1**D. That is, for example, routing lines **145-1** to **145**-N may be distributed across block **102** in a direction of the data lines **110**. Routing lines **145-1** to **145**-N may extend in a direction that is perpendicular to the direction of data lines **110**, as shown in FIG. **1**A. Vertical contacts **150-1** to **150**-N may be distributed across the block pitch P**1** in a direction of the data lines **110**, for example. As shown in FIGS. **1**C and **1**D.

A pass transistor **140** may be coupled to the end of each of the routing lines **145-1** to **145**-N as shown for representative pass transistors in FIGS. **1**A, **1**B, and **1**D. The pass transistors **140** may also be under the memory block **102**, and thus the memory array, as shown in FIGS. **1**B and **1**D. For example, pass transistors **140** may be distributed across the pitch P**1** of block **102**, e.g., across block **102** in the direction of the data lines **110**.

Since the number of access plates **120** may be equal to the number of memory cells **112** in a string of series-coupled memory cells **112**, the number of routing lines **145**, the number of vertical contacts **150**, and the number of pass transistors **140** may be equal to the number of memory cells **112** in a string of series-coupled memory cells **112**, for example. Therefore, as the number of memory cells **112** in a string of series-coupled memory cells **112** increases, the number of routing lines **145**, the number of vertical contacts **150**, and the number of pass transistors **140** that are distributed across the block pitch P**1** may increase proportionally. However, the block pitch P**1** may be insufficient to accommodate the increased number of routing lines **145**, vertical contacts **150**, and pass transistors **140**, and the block pitch P**1**, and thus the size of block **102**, might need to be increased.

FIG. **2**A is a top-down view of an example of a portion of a memory device that includes a stacked (e.g., three-dimensional) memory array. For example, the memory array might include a block (e.g., a memory block) **202-1** of memory cells, e.g., that may be erased concurrently, a block (e.g., a memory block) **202-2** of memory cells, e.g., that may be erased concurrently, and a periphery **204**. Blocks **201-2** and **201-2** might be mirror images of each other, for example. FIG. **2**B is an elevation view of an example of a portion of a memory device taken along a direction of the data lines **210**, e.g., bit lines, in FIG. **2**A.

FIG. **2**B illustrates a representative block **202** of memory cells that may include block **202-1** or block **202-2**, for example. Block **202** may include a plurality of tiers **211** (e.g., tiers **211-1** to **211**-N) of memory cells **212** (FIG. **2**B), such as non-volatile memory cells, where tiers **211-1** to **211**-N are respectively at different levels, e.g., vertical levels. The memory cells **212** in a respective one of the tiers **211-1** to **211**-N may be at a common vertical level and may be commonly coupled to a respective access plate **220**, such as a word-line plate, at that common vertical level.

For example, the memory cells **212** in respective ones of the tiers **211-1** to **211**-N respectively at the different levels may be respectively commonly coupled to respective ones of access plates **220-1** to **220**-N. An access plate **220** might include a planar conductor to which the memory cells **212** in a corresponding tier are commonly coupled. Alternatively, an access plate **220** might refer to a plurality of shorted-together access lines (e.g., word lines), where respective portions (e.g., groupings) of the memory cells **212** in a corresponding tier **211** are commonly coupled to respective ones of the shorted-together access lines.

FIG. **2**C is a perspective view of an example of a portion of a stacked memory block, such as a portion of the representative memory block **202** in FIG. **2**B. FIG. **2**C

shows tiers **211**-*i* to **211**-*k* of the tiers **211-1** to **211**-N. The memory cells **212**-*i* in tier **211**-*i* may be commonly coupled to access plate **220**-*i*; the memory cells **212**-*j* in tier **211**-*j* may be commonly coupled to access plate **220**-*j*; and memory cells **212**-*k* in tier **211**-*k* may be commonly coupled to access plate **220**-*k*.

The memory cells **212** in a tier **211** may be located at intersections of the access plate **220** for that tier **211** and the plurality of structures **125**. Note that an access plate **220** may be coupled to or include a control gate of a memory cell **212** at each intersection of that access plate **220** and a structure **125**. For example, as shown in FIG. **2**C, the memory cells **212**-*i* in tier **211**-*i* may be located at the intersections of access plate **220**-*i* and the structures **125**; the memory cells **212**-*j* in tier **211**-*j* may be located at the intersections of access plate **220**-*j* and the structures **125**; and the memory cells **212**-*k* in tier **211**-*k* may be located at the intersections of access plate **220**-*k* and the structures **125**.

A plurality of access plates **220** intersecting a structure **125** at different vertical levels (FIG. **2**B) might define a string (e.g., vertical string), such as a NAND string, of series-coupled memory cells **212**. That is, for example, the memory cells **212-1** to **212**-N in a string may respectively be at the vertical levels of the access plates **220-1** to **220**-N. For example, a string of series-coupled memory cells **212** might include one memory cell **212** from each tier **211** coupled to one of the access plates **220** corresponding to that tier **211**. For example, the memory cells **212-1** to **212**-N in a string might be respectively in tiers **211-1** to **211**-N. That is, for example, a number of the access plates **220** may be equal to the number of memory cells in a string of series-coupled memory cells **212**.

In FIG. **2**C, the access plates **220**-*i* to **220**-*k* intersecting a structure **125** might define a portion of a string of series-coupled memory cells. For example, the memory cells **212**-*i*, **212**-*j*, and **212**-*k* respectively at the intersections of access plates **220**-*i* to **220**-*k* and a structure **125** may be coupled in series and may form a portion of a string of series-coupled memory cells **212-1** to **212**-N. Note that the access plates **220**-*i* to **220**-*k* and thus the memory cells **212**-*i*, **212**-*j*, and **212**-*k* may wrap (e.g., completely) around a structure **125**, as shown in FIG. **2**C.

FIG. **2**D is a cross-sectional elevation view of an example of a portion of a stacked memory block, such as a portion of the representative memory block **202** in FIG. **2**B, illustrating additional detail of the memory cells **212-1** to **212**-N. Each of memory cells **212-1** to **212**-N may include a control gate, e.g., that might be a portion of or coupled to a respective access plate **220**. For example, in FIG. **2**D, access plates **220-1** to **220**-N may respectively include the control gates of memory cells **212-1** to **212**-N so that the control gates of memory cells **212-1** to **212**-N may be respectively represented by access plates **220-1** to **220**-N.

Each of memory cells **212-1** to **212**-N may include a charge-storage structure **221**, such as a charge trap or a floating gate, e.g., at the intersection of structure **125** and a respective access plate **220**. Each of memory cells **212-1** to **212**-N may include a dielectric **222**, such as a blocking dielectric, that may be between a respective access plate **220** and a respective charge-storage structure **221**. For example, a dielectric **222** of memory cell **212**-*i* may be between access plate **220**-*i* and the charge-storage structure **221** of memory cell **212**-*i*. Each of memory cells **212-1** to **212**-N may include a dielectric **223**, such as a tunnel dielectric, that may be between a respective charge-storage structure **221** and a structure **125**. For example, a dielectric **223** of memory cell **212**-*i* may be between the charge-storage structure **221** of memory cell **212**-*i* and structure **125**. Dielectric **222**, charge-storage structure **221**, and dielectric **223** may wrap completely around structure **125**, for example, and may be at the intersection of an access plate of the access plates **220-1** to **220**-N and a structure **125**.

A select plate **226**, such as a source-select plate, might be located at a vertical level that is below the lowermost tier **211-1** of memory cells and the lowermost access plate **220-1**. For example, select plate **226** might be between access plate **220-1** and a source **228** that is at a vertical level below select plate **226** and that may be in contact (e.g., direct physical contact) with an end of structure **125**.

A select transistor **227**, such as a source select transistor, may be at an intersection of select plate **226** and structure **125** and may be coupled to source **228**. For example, select plate **226** may intersect each of the structures **125** in FIG. **2**B, and there may be a select transistor **227** at each intersection, so that the select transistors **227** are commonly coupled to select plate **226**. A select transistor **227** may include a control gate that is coupled to or that is a portion of select plate **226**. For example, in FIG. **2**D, the control gate of select transistor **227** may be included in select plate **226**. A dielectric **229**, such as a gate dielectric, of a select transistor **227** may be between select plate **226** and a structure **125**. A select plate **226**, and thus a dielectric **229** and a select transistor **227**, may wrap completely around a structure **125**, for example.

A select plate **231**, such as a drain select plate, might be located at a vertical level that is above the uppermost tier **211**-N of memory cells and the uppermost access plate **220**-N. For example, select plate **231** might be between access plate **220**-N and a data line **210** that is at a vertical level above select plate **231**.

A select transistor **233**, such as a drain select transistor, may be at an intersection of select plate **231** and structure **125**. For example, select plate **231** may intersect each of the structures **125** in FIG. **2**B, and there may be a select transistor **233** at each intersection, so that the select transistors **233** are commonly coupled to select plate **231**. A select transistor **233** may include a control gate that is coupled to or that is a portion of select plate **231**. For example, in FIG. **2**D, the control gate of select transistor **233** may be included in select plate **231**. A dielectric **235**, such as a gate dielectric, of select transistor **233** may be between select plate **231** and structure **125**. A select plate **231**, and thus a dielectric **235** and a select transistor **233**, may wrap completely around structure **125**, for example. A data line **210** may be coupled to an end of structure **125**, and thus to select transistor **233**, by a contact **236**, for example.

The memory cells **212-1** to **212**-N form a string of series-coupled memory cells **212-1** to **212**-N. An end of the string of series-coupled memory cells **212-1** to **212**-N may be coupled in series to select transistor **227**, and an opposite end of the string of series-coupled memory cells **212-1** to **212**-N may be coupled in series to select transistor **233**. Select transistor **233** may be configured to selectively couple the string of series-coupled memory cells **212-1** to **212**-N to data line **210**, and select transistor **227** may be configured to selectively couple the string of series-coupled memory cells **212-1** to **212**-N to source **228**.

The access plates **220** might be electrically isolated and separated from each other, for example. That is, for example, dielectric **130** might be between the access plates **220**, as shown in FIGS. **2**B and **2**D. A dielectric **238** might be between access plate **220-1** and select plate **226**; a dielectric

239 might be between access plate 220-N and select plate 231; and a dielectric 241 might be between select plate 226 and source 228.

Access plates 220-1 to 220-N may respectively extend into periphery 204 by different distances, as shown in FIGS. 2B and 2D. The distance by which an access plate 220 extends into periphery 204 (e.g., in a direction that is perpendicular to data lines 210) may decrease as the vertical level of the access plate 220 increases. For example, the distances by which access plates 220-1 to 220-N extend into periphery 204 respectively decrease.

A portion of an access plate 220 that extends beyond an end of the access plate at the next vertical level (e.g., the next higher access plate) may define a step (e.g., a stair) 232, e.g., a landing pad for a contact. For example, in the example of FIG. 2B, the portions of access plates 220-1 to 220-(L−1) that respectively extend beyond the ends of access plates 220-2 to 220-L respectively define steps 232-1 to 232-(L−1), e.g., that are respectively at the vertical levels of tiers 211-1 to 211-(L−1), and the portions of access plates 220-(L+1) to 220-(N−1) that respectively extend beyond the ends of access plates 220-(L+2) to 220-N respectively define steps 232-(L+1) to 232-(N−1), e.g., that are respectively at the vertical levels of tiers 211-(L+1) to 211-(N−1). Note that the portions of the access plates 220-*i* and 220-*j* that respectively extend beyond the ends of access plates 220-*j* and 220-*k* may respectively define steps 232-*i* and 232-*j* in FIG. 2C. The step 232-*k* may be defined by the portion of access plate 220-*k* extends beyond an access plate (not shown in FIG. 2C) immediately above access plate 220-*k*, for example.

In the examples of FIGS. 2*a* and 2B, a staircase 234 may include the steps 232-1 to 232-(L−1) and the steps 232-(L+1) to 232-(N−1), and periphery 204 may include a staircase 234, e.g., that may sometimes be called a stadium. Staircase 234 may extend in a direction perpendicular to data lines 210 away from a memory block 202 of memory cells.

Staircase 234 may include groups of the steps, such as flights of steps (e.g., stairs) 232. For example, as shown in FIG. 2A, steps 232-(L+1) to 232-(N−1) may form a group 235-1 of the steps 232-(L+1) to 232-(N−1), such as a flight, e.g., a flight of stairs 232-(L+1) to 232-(N−1), and steps 232-1 to 232-(L−1) may form a group 235-2 of the steps 232-1 to 232-(L−1), such as a flight, e.g., a flight of stairs 232-1 to 232-(L−1). For example, the steps 232-1 to 232-(L−1) of group 235-2 respectively correspond to (e.g., are respectively for) tiers 211-1 to 211-(L−1), and the steps 232-(L+1) to 232-(N−1) of group 235-1 respectively correspond to tiers 211-(L+1) to 211-(N−1).

In some examples, the number of steps in group 235-1 may or may not be the same as the number of steps in group 235-2. In some examples, a group (e.g., a flight) might include only one step. For example, a group might include one or more steps.

The portion of access plate 220-L that extends beyond access plate 220-(L+1) may form a landing 237-2 (e.g., sometimes called a crest) of staircase 234 between the group 235-2 of the steps 232-1 to 232-(L−1) and the group 235-1 of the steps 232-(L+1) to 232-(N−1), as shown in FIGS. 2A and 2B. For example, landing 237-2 may serve as a landing pad for a contact. Note that landing 237-2 corresponds to (e.g., is at the vertical level of) tier 211-L. A portion of access plate 220-N may form a landing 237-1 (FIGS. 2A and 2B) that corresponds to (e.g., is at the vertical level of) tier 211-N and may serve as a landing pad for a contact.

A step may extend beyond the steps and/or landings at levels above it in a direction that is perpendicular to data lines 210 in the example of FIG. 2B. For example, step 232-1 extends beyond steps 232-2 to 232-(L−1), landing 237-2, steps 232-(L+1) to 232-(N−1), and landing 237-1 in a direction that is perpendicular to data lines 210. Landing 237-2, for example, extends beyond steps 232-(L+1) to 232-(N−1) and landing 237-1 in a direction that is perpendicular to data lines 210.

Note that the example of FIG. 2D shows that the access plates 220-1 to 220-N might form a single group (e.g., flight) of steps. For example, respective ones of the access plates 220-1 to 220-N may respectively define respective ones of the steps 232-1 to 232-N with no landings. For example, respective ones of the steps 232-1 to 232-N in FIG. 2D are respectively coupled to respective ones of tiers 211-1 to 211-N of memory cells. In the example of FIG. 2D, a portion of source 228 extends beyond select plate 226 to form a step 243; a portion select plate 226 extends beyond access plate 232-1 to form a step 244 that is coupled to select transistor 227; and a portion of access plate 220-N extends beyond select plate 231 to form the step 232-N.

A plurality of pass transistors 240 may be located (e.g., only) under (e.g., directly vertically under) the staircase 234, as shown in FIG. 2B. For example, respective ones of the plurality of transistors 240 may be respectively coupled to respective ones of the steps 232 and landings 237, and thus respective ones of the of access plates 220, and may be respectively coupled to respective ones of a plurality of global access lines (e.g., global word lines), such as the global access lines 245 exemplified in FIGS. 2A and 2B. As such, for example, the respective ones of the plurality of transistors 240 may be configured to respectively selectively couple the respective ones of a plurality of global access lines 245 to the respective ones of the steps 232 and landings 237.

In some examples, the plurality of pass transistors 240 may include a plurality of groups of pass transistors, where respective ones of at least some of the pass transistors 240 in a group may be respectively coupled respective ones of the steps of a group of the steps. For example, as exemplified in FIGS. 2A and 2B, respective ones of the pass transistors 240-(N−2) and 240-(N−1) of the group of pass transistors 240-(L+1) to 240-N may be respectively coupled to respective ones of steps 232-(N−2) and 232-(N−1). Moreover, pass transistor 240-N may be coupled to landing 237-1. Although not shown, respective ones of the pass transistors 240-(L+1) to 240-(N−3) of the group of pass transistors 240-(L+1) to 240-N may be respectively coupled to respective ones of steps 232-(L+1) to 232-(N−3).

Respective ones of the steps 232-1 to 232-(L−1) may be respectively coupled to respective ones of a plurality of pass transistors (not shown in FIG. 2B) under (e.g., directly vertically under) staircase 234, where the respective ones of those pass transistors may be respectively coupled to respective ones of a plurality of global access lines (not shown). Moreover, landing 237-2 might be coupled to a pass transistor (not shown in FIG. 2B) that may be coupled to a global access line (not shown in FIG. 2B) and that may be under (e.g., directly vertically under) staircase 234.

At least some of the group of pass transistors 240-(L+1) to 240-N may be in a region below staircase 234 that is directly vertically below the landing 237-2 that is between the consecutive groups 235-1 and 235-2 of steps. That is, for example, as exemplified in FIG. 2B, pass transistors 240-(N−1) and 240-N may be under staircase 234 in a region that is between the consecutive groups 235-1 and 235-2 of steps and that is directly vertically below landing 237-2.

As exemplified in FIG. **2**A, pass transistors **240**-(N−2) to **240**-N may be below (e.g., directly vertically below) the landing **237-2**. As exemplified in FIGS. **2**A and **2**B, pass transistors **240**-(L+2) to **240**-(N+3) may be below (e.g., directly vertically below) the group **235-1** of steps **232**-(L+1) to **232**-(N−1), and pass transistor **240**-(L+1) might be under (e.g., directly vertically below) landing **237-1**. In some examples, the pass transistors **240**-(L+1) to **240**-N may be distributed (e.g., aligned) along a direction that is perpendicular to data lines **210**, and thus in a direction that is parallel to the direction which the steps and/or landings extend beyond steps and/or landings above them.

The pass transistors **240**-(N−2) and **240**-(N−1) shown in the examples of FIGS. **2**A and **2**B may be configured to respectively selectively couple global access lines **245**-(N−2) and **245**-(N−1) to steps **232**-(N−2) and **232**-(N−1), and pass transistor **240**-N may be configured to selectively couple global access line **232**-N to landing **237-1**.

In the examples of FIGS. **2**A and **2**B, respective ones of pass transistors **240**-(N−2) to **240**-N (e.g., that may be directly vertically under landing **237-2** in the example of FIG. **2**A) may be respectively coupled respective ones of lines **250**. The respective ones of lines **250** may pass under staircase **234** (e.g., in a direction parallel to data lines **210**) respectively from the respective ones of pass transistors **240**-(N−2) to **240**-N to past a sidewall **257** of staircase **234** that extends from block **202-1** in a direction perpendicular to data lines **210**. For example, lines **250** may extend to a location on the outside of sidewall **257**, and thus on the outside of staircase **234**.

Respective ones of lines **250** may be respectively coupled to (e.g., by direct contact with) respective ones of vertical contacts **255** (e.g., that may be referred to as deep contacts). Contacts **255**, for example, might be located on the outside of and adjacent to sidewall **257**, as shown in FIG. **2**A. Contacts **255** may be distributed (e.g., aligned) along a direction that is perpendicular to the data lines **210**. For example, contacts **255** may be distributed along the length of sidewall **257** in a direction parallel to sidewall **257**, and thus in a direction perpendicular to the data lines **210**. That is, for example, contacts **255** may be aligned with a line that is perpendicular to the data lines **210**. For example, contacts **255** may be distributed (e.g., aligned) along a direction that is parallel to the direction which the steps and/or landings extend beyond steps and/or landings above them.

The respective ones of vertical contacts **255** may extend vertically upward from the respective ones of the lines **250** respectively to respective ones of lines **260**, e.g., that might be at the vertical level of data lines **210**. The respective ones of vertical contacts **255** may be respectively coupled to (e.g., by direct contact with) the respective ones of the lines **260**.

In FIG. **2**A, the respective ones of lines **260** may extend over landing **237-2** (e.g., in a direction parallel to data lines **210**) respectively from the respective ones of vertical contacts **255** and past a sidewall **262** of staircase **234**, e.g., that is opposite and parallel to sidewall **257** and that extends from block **202-1** in a direction perpendicular to data lines **210**. For example, lines **260** might extend to a location that is outside of sidewall **262**, and thus of staircase **234**. Note that the opposing sidewalls **257** and **262** may include opposing sidewalls of the access plates **220** and the opposing sidewalls of the dielectric **130** between the access plates **220**, for example.

In FIG. **2**A, the respective ones of lines **260** may, for example, respectively extend to respective ones of lines **265** and may be respectively coupled to (e.g., by direct contact with) the respective ones of lines **265**, e.g., where lines **265** might be at the vertical level of data lines **210**. Lines **265** might be located outside of sidewall **262**.

The respective ones of the lines **265** might respectively extend from the respective ones of lines **260** in a direction parallel to sidewall **262** and perpendicular to data lines **210** respectively to respective ones of lines **270**, in FIG. **2**A. The respective ones of the lines **265** might be respectively coupled to (e.g., by direct contact with) respective ones of lines **270**, e.g., that might be at the vertical level of data lines **210**.

The respective ones of lines **270** may respectively extend from respective ones of lines **265** respectively over at least a portion of respective ones of step **232**-(N−2), step **232**-(N−1), and landing **237-1** (e.g., in a direction parallel to data lines **210**) respectively to respective ones of vertical contacts **275**, as shown in FIG. **2**A. The respective ones of lines **270** may be respectively coupled to (e.g., by direct contact with) the respective ones of vertical contacts **275**. The respective ones of the vertical contacts **275** may respectively extend vertically downward from the respective ones of lines **270** respectively to and may be respectively coupled to (e.g., by direct contact with) the respective ones of step **232**-(N−2), step **232**-(N−1), and landing **237-1**, as shown in FIG. **2**B. In the example of FIG. **2**C, a vertical contact **275** may be coupled to (e.g., by direct contact with) each of steps **232**-*i* to **232**-*j*. Each vertical contact **275**, and thus each of the steps **232**-*i* to **232**-*j*, may be coupled to a pass transistor **240**.

In some examples, a plurality of vertical contacts **275** might be coupled between and to a respective line **270** and a respective step **232** and/or between and to a respective line **270** and a respective landing **237**. This may reduce resistance compared to coupling a single contact **275** between and to a respective line **270** and a respective step **232** and/or between and to a respective line **270** and a respective landing **237** and can provide redundancy. Respective pluralities of vertical contacts **275** may extend vertically downward from the respective ones of lines **270** respectively to and may be respectively coupled to (e.g., by direct contact with) the respective ones of step **232**-(N−2), step **232**-(N−1), and landing **237-1**, for example, as shown in FIG. **2**B.

Respective ones of the steps **232-1** to **232**-(L−1) may be respectively coupled to respective ones of a plurality of pass transistors (not shown in FIGS. **2**A and **2**B) under (e.g., directly vertically under) staircase **234**, where the respective ones of those pass transistors may be respectively coupled to respective ones of a plurality of global access lines (not shown in FIGS. **2**A and **2**B). For example, the respective ones of the steps **232-1** to **232**-(L−1) might be respectively coupled to respective ones of a plurality of vertical contacts that may be respectively coupled to the respective ones of the plurality of pass transistors. Moreover, landing **237-2** might be coupled to a pass transistor (not shown in FIGS. **2**A and **2**B) that may be coupled to a global access line (not shown in FIGS. **2**A and **2**B) and that may be under (e.g., directly vertically under) staircase **234**. For example, landing **237-2** might be coupled to a vertical contact that is coupled the pass transistor. The vertical contacts coupled to the respective ones of the steps **232-1** to **232**-(L−1) and the landing **237-2** may be distributed (e.g., aligned) along a direction that is perpendicular to the data lines **210**, and thus may be distributed (e.g., aligned) along a direction that is parallel to the direction which the steps and/or landings extend beyond steps and/or landings above them. For example, those vertical contacts may be outside of sidewall **257** and may be distributed along the length of sidewall **257** in the direction parallel to sidewall **257**.

Group **235-1** of the steps **232**-(L+1) to **232**-(N−1) and group **235-2** of the steps **232-1** to **232**-(L−1) may be in tandem. That is, for example, group **235-1** may be between group **235-2** and a block **202**. For example, group **235-2** may be after a group **235-1** in a direction that is away from block **202-1**, that is perpendicular to data lines **210**, and that is parallel to the direction which the steps and/or landings extend beyond steps and/or landings above them.

The steps **232-1** to **232**-(L−1), the steps **232**-(L+1) to **232**-(N−1), and landings **237-1** and **237-2** may span the entire distance (e.g., that is a direction parallel to data lines **210**) between the sidewalls **257** and **262** of a staircase **234**, which distance, for example, may be less than or equal to a block pitch P**2** (FIG. **2**A) of memory array **202-1**, where the block pitch P**2** is a distance across block **202-1** in the direction of the data lines **110**. Note, for example, that contacts **255** may be distributed along a distance that is perpendicular to block pitch P**2**, and thus along a distance that is parallel to a direction that a step and/or a landing extends beyond the steps or a landing above it.

In some examples, a plurality of pass transistors **240** might be coupled to a step **232** and/or a landing **237**. For example, a plurality of pass transistors **240** might be coupled to each step **232** and to each landing **237**. In an example, a plurality of transistors **240**-(N−2) and a plurality of transistors **240**-(N−1) might be respectively coupled to respective ones of steps **232**-(N−2) and **232**-(N−1), and a plurality of transistors **240**-N might be coupled to landing **237-1**. Respective pluralities of the pass transistors **240**-(L+1) to **240**-(N−3) may be respectively coupled to respective ones of steps **232**-(L+1) to **232**-(N−3), for example.

For some examples, a plurality of pass transistors **240** coupled to a single step **232** or a single landing **237** might be coupled to a single global access line. For example, the plurality of transistors **240**-(N−2) coupled to step **232**-(N−2) might be coupled to global access line **245**-(N−2); the plurality of transistors **240**-(N−1) coupled to step **232**-(N−1) might be coupled to global access line **245**-(N−1); and the plurality of transistors **240**-N coupled to landing **237-1** might be coupled to global access line **245**-N.

For other examples, respective ones of the plurality of pass transistors **240** coupled to a single step **232** or single landing **237** might be respectively coupled to different global access lines. For example, there might be a plurality of different global access lines **245**-(N−2), a plurality of different global access lines **245**-(N−1), and a plurality of different global access lines **245**-N. For example, respective ones of the plurality of transistors **240**-(N−2) coupled to step **232**-(N−2) might be respectively coupled to respective ones of the plurality of different global access lines **245**-(N−2); respective ones of the plurality of transistors **240**-(N−1) coupled to step **232**-(N−1) might be respectively coupled to respective ones of the plurality of different global access lines **245**-(N−1); and respective ones of the plurality of transistors **240**-N coupled to landing **237-1** might be respectively coupled to respective ones of the plurality of different global access lines **245**-N.

FIG. **2**E is a schematic diagram of an example illustrating the coupling of pass transistors to access and select plates. For example, respective ones of the access plates **220-1** to **220**-N may be respectively coupled to respective ones of the memory cells **212-1** to **212**-N each of the strings **290** of memory cells **212-1** to **212**-N. For example, the strings **290** may correspond to the vertical strings of memory cells **212-1** to **212**-N in FIGS. **2**B and **2**D. Respective ones of the access plates **220-1** to **220**-N may be respectively coupled to respective ones of the pass transistors **240-1** to **240**-N, e.g., that include the pass transistors **240**-(L+1) to **240**-N in FIGS. **2**A and **2**B. For example, pass transistors **240-1** to **240**-N may be located (e.g., only) under (e.g., directly vertically under) the staircase **234** in FIG. **2**B or the staircase in FIG. **2**D.

Respective ones of the steps **232-1** to **232**-N respectively of the respective ones of the access plates **220-1** to **220**-N in FIG. **2**D may be respectively coupled to respective ones of the pass transistors **240-1** to **240**-N, for example. Alternatively, respective ones of the steps **232-1** to **232**-(L−1) respectively of the respective ones of access plates **220-1** to **220**-(L−1) in FIG. **2**B may be respectively coupled to respective ones of pass transistors **240-1** to **240**-(L−1); landing **237-2** in FIG. **2**B of access plate **232**-L may be coupled to pass transistor **240**-L; respective ones of the steps **232**-(L+1) to **232**-(N−1) respectively of the respective ones of the access plates **220**-(L+1) to **220**-(N−1) in FIG. **2**B may be respectively coupled to respective ones of pass transistors **240**-(L+1) to **240**-(N−1); and landing **237-1** in FIG. **2**B may be coupled to pass transistor **240**-N.

Respective ones of the global access **245-1** to **245**-N in FIG. **2**E, e.g., that include the global access lines **245**-(N−2) to **245**-N in FIG. **2**B, may be respectively coupled to respective ones of pass transistors **240-1** to **240**-N. Respective ones of access-line drivers **292-1** to **292**-N may be respectively coupled to respective ones of global access lines **245-1** to **245**-N. A pass transistor **293** might be coupled to select plate **226** (also shown in FIG. **2**D) and to a global select line **294** that is coupled to a select-line driver **295**, such as a source select-line driver. A pass transistor **296** might be coupled to select plate **231** (also shown in FIG. **2**D) and to a global select line **297** that is coupled to a select-line driver **298**, such as a drain select-line driver. Pass transistors **293** and **296** may be located (e.g., only) under (e.g., directly vertically under) the staircase **234** in FIG. **2**B or the staircase in FIG. **2**D.

Control gates of pass transistors **240-1** to **240**-N and pass transistors **293** and **296** might be commonly coupled to a block select line **299**. Pass transistors **240-1** to **240**-N and pass transistors **293** and **296** may be concurrently activated in response to the control gates of pass transistors **240-1** to **240**-N and pass transistors **293** and **296** concurrently receiving a signal over block select line **299** that selects block **202**. For example, respective ones of pass transistors **240-1** to **240**-N may be configured to respectively selectively couple respective ones of the global access lines **245-1** to **245**-N respectively to respective ones of access plates **220-1** to **220**-N in response to receiving the signal over block select line **299** that selects block **202**, and respective ones of pass transistors **293** and **296** may be configured to respectively selectively couple respective ones of the select plates **226** and **231** to respective ones of the global select lines **294** and **297** in response to receiving the signal over block select line **299** that selects block **202**. Note that the global access lines **245-1** to **245**-N and the global select lines **294** and **297** may be coupled to pass transistors for another block that are configured to couple the global access lines **245-1** to **245**-N and the global select lines **294** and **297** to access plates and select plates in the other block in response to receiving another signal over another block select line that selects the other block.

Note that, in some examples, a plurality of pass transistors **240** might be coupled to each of the access plates **220-1** to **220**-N. For example, a plurality of pass transistors **240-1** to a plurality of pass transistors **240**-N might be respectively coupled to respective ones of the access plates **220-1** to **220**-N. There might be a plurality of global access lines

245-1 to a plurality of global access lines 245-N and a plurality of different access-line drivers 292-1 to a plurality of different access-line drivers 292-1. For example, the plurality of pass transistors 240-1 to the plurality of pass transistors 240-N might be respectively coupled to the plurality of global access lines 245-1 to the plurality of global access lines 245-N that may be respectively coupled to the plurality of access-line drivers 292-1 to the plurality of access-line drivers 292-1. That is, for example, respective ones of the plurality of pass transistors 240-1 coupled to access plate 220-1 might be respectively coupled to respective ones of the plurality of global access lines 245-1 that are respectively coupled to different ones of the plurality of access-line drivers 292-1; . . . respective ones of the plurality of pass transistors 240-L coupled to access plate 220-L might be respectively coupled to respective ones of the plurality of global access lines 245-L that are respectively coupled to different ones of the plurality of access-line drivers 292-L; . . . respective ones of the plurality of pass transistors 240-N coupled to access plate 220-N might be respectively coupled to respective ones of the plurality of global access lines 245-N that are respectively coupled to different ones of the plurality of access-line drivers 292-N.

In some examples, a plurality of pass transistors 293 might be coupled to select plate 226 and a plurality of pass transistors 296 coupled to select plate 231. Respective ones of the plurality of pass transistors 293 coupled to select plate 226 might be respectively coupled to respective ones of a plurality of global select lines 294 that might be respectively coupled to respective ones of a plurality of different select-line drivers 295, and respective ones of the plurality of pass transistors 296 coupled to select plate 231 might be respectively coupled to respective ones of a plurality of global select lines 297 that might be respectively coupled to respective ones of a plurality of different select-line drivers 298.

For the example of FIG. 2D, one or more of the vertical contacts 275 might be coupled to (e.g., by direct contact with) each of the steps 232-1 to 232-N. The one or more vertical contacts 275 coupled to a respective step of each of the steps 232-1 to 232-N, for example, might be coupled to respective single pass transistor 240. For example, the one or more vertical contacts 275 coupled to step 232-1 might be coupled to a single pass transistor 240-1 (FIG. 2E); . . . the one or more vertical contacts 275 coupled to step 232-N might be coupled to a single pass transistor 240-N (FIG. 2E).

Alternatively, respective ones of the one or more vertical contacts 275 coupled to each of the steps 232-1 to 232-N might be respectively coupled to respective ones of one or more corresponding pass transistors 240. Respective ones of the one or more vertical contacts 275 coupled to a respective step of each of the steps 232-1 to 232-N, for example, might be respectively coupled to respective ones of one or more pass transistors 240 for the respective step of each of the steps 232-1 to 232-N. For example, respective ones of the one or more vertical contacts 275 coupled to step 232-1 might be respectively coupled to respective ones of one or more pass transistors 240-1; . . . respective ones of the one or more vertical contacts 275 coupled to step 232-N might be respectively coupled to respective ones of one or more of pass transistors 240-N.

One or more vertical contacts 276 in the example of FIG. 2D might be coupled to select plate 231. For example, the one or more vertical contacts 276 may be coupled to a single pass transistor 296 (FIG. 2E), or respective ones of the one or more vertical contacts 276 may be respectively coupled to respective ones of one or more pass transistors 296.

One or more vertical contacts 277 in the example of FIG. 2D might be coupled to step 244. For example, the one or more vertical contacts 277 may be coupled to a single pass transistor 293 (FIG. 2E), or respective ones of the one or more vertical contacts 277 may be respectively coupled to respective ones of one or more pass transistors 293. In some examples, one or more vertical contacts 278 in the example of FIG. 2D might be coupled to step 243.

FIG. 3 is a top perspective view of an example staircase 334 that may extend in a direction perpendicular to the data lines of a memory array away from a memory block of memory cells of the memory array, e.g., in a manner similar to (e.g., the same as) described above for staircase 234 in conjunction with FIGS. 2A and 2B. For example, the staircase 334 may include a plurality of groups (e.g., flights) 335 of steps (e.g., stairs), such as groups 335-1 to 335-4, e.g., in tandem. For example, groups 335-1, 335-2, 335-3, and 335-4 may respectively be consecutive groups in the direction away from the memory block.

For example, the memory block 202-2 in FIG. 2A may be located at the outside of the landing 337-1 in FIG. 3. The steps 232-(L+1) to 232-(N−1) in FIG. 2A might correspond to the steps of group 335-1 in FIG. 3. The landing 237-2 in FIG. 2A may correspond to the landing 337-2 in FIG. 3. The steps 232-1 to 232 (L−1) in FIG. 2A correspond to the steps of group 335-2 in FIG. 3.

Arranging the groups of steps in tandem in a direction away from a memory array, as in FIGS. 2A and 3, for example, allows groups of steps to be added without increasing a distance d from a sidewall 357 to an opposing sidewall 362 of staircase 334, e.g., in a direction parallel to the data lines of the memory block, such as the data lines 210 in FIG. 2A.

Sidewalls 357 and 362 may be parallel and may extend from the memory block in a direction perpendicular to data lines, such as data lines 210 in FIG. 2A, e.g., in a manner similar to (e.g., the same as) for sidewalls 257 and 262 of staircase 234, as described above in conjunction with FIG. 2A. In some examples, the distance d might be less than or equal to the block pitch, such as the block pitch P2 in FIG. 2A. Therefore, groups of steps may be added without increasing the block pitch, for example.

A step, for example, may be a portion of an access plate that extends beyond an end of the access plate at the next higher vertical level (e.g., the next higher access plate). A landing 337 may extend beyond a lowermost step of a group steps and may terminate above the next consecutive group of steps, in the direction away from the memory block, so that an uppermost step of the next consecutive group of steps is below and extends beyond the landing 337. For example, landing 337-2 may extend beyond the lowermost step of group 335-1 and may terminate above the uppermost step of group 335-2 so that the uppermost step of group 335-2 extends beyond landing 337-2; landing 337-3 may extend beyond the lowermost step of group 335-2 and may terminate above the uppermost step of group 335-3 so that the uppermost step of group 335-3 extends beyond landing 337-3; etc. Landing 337-1, for example, may be a portion of an access plate that is commonly coupled to an uppermost tier of memory cells and may terminate above the uppermost step of group 335-1 so that the uppermost step of group 335-1 extends beyond landing 337-1.

Groups 338-1 to 338-4 of dummy steps might be respectively mirror images of the groups 335-1 to 335-4, and groups 338-1 to 338-4 of dummy steps might be respectively formed while the groups 335-1 to 335-4 are formed. For example, groups 335-1 and 338-1 might be mirror images of

each other; groups **335-2** and **338-2** might be mirror images of each other; etc. For example, the dummy steps might not be electrically coupled to a tier of memory cells.

A group of dummy steps might be between consecutive groups of steps. For example, group **338-1** might be between the consecutive groups **335-1** and **335-2**; group **338-2** might be between the consecutive groups **335-2** and **335-3**; etc.

A landing **337** may pass under a group of dummy steps. For example, a landing **337** that might extend beyond a lowermost step of a group of steps **335** and that might terminate above the next consecutive group **335** of steps, in the direction away from the memory block, might pass under the group of dummy steps between those consecutive groups **335** of steps. For example, landing **337-2** might extend under the group **338-1**; landing **337-3** might extend under the group **338-2**; etc.

The example of FIG. **3** shows that vertical contacts **355** may be adjacent to and outside of sidewall **357** of staircase **334**. Vertical contacts **355** may be coupled to (e.g., by direct contact with) lines **350** that might extend under staircase **334** and might be respectively coupled to pass transistors under staircase **334**. Vertical contacts **355** may be may be distributed (e.g., aligned) along a direction that is perpendicular to the data lines, such as data lines **210** in FIG. **2**A. For example, vertical contacts **355** may be distributed along the length of sidewall **357** in a direction parallel to sidewall **357**, and thus in a direction perpendicular to the data lines. That is, for example, vertical contacts **355** may be aligned with a line that is perpendicular to the data lines. For example, contacts **355** may be distributed (e.g., aligned) along a direction that is parallel to the direction which the steps and/or landings extend beyond steps and/or landings above them.

Respective ones of the vertical contacts **355** may be respectively coupled to respective ones of the steps of the groups **335-1** to **335-4** and respective ones of the landings **337-1** to **337-5**. For example, the vertical contacts **355** may be coupled to lines (not shown in FIG. **3**), e.g., that are at the level of the data lines, that are in turn coupled to the steps and landings by vertical contacts (not shown in FIG. **3**) that extend vertically downward from the lines to (e.g. into direct contact with) the steps and landings.

FIG. **4** is a bottom perspective view of a portion of the staircase **334**. In the example of FIG. **4**, groups of the vertical contacts **355** might be coupled to groups of pass transistors **440**. For example, the pass transistors **440** of groups **445-1** and **445-2** might be respectively coupled to the vertical contacts **355** of groups **450-1** and **450-2**. The pass transistors **440** might span the distance d (e.g., in a direction parallel to data lines, such as the data lines **210** in FIG. **2**A) from the sidewall **357** of staircase **334** to the sidewall **362** of staircase **334**.

Group **445-1** of pass transistors **440** might be located directly vertically under a landing, such as landing **337-5**. Group **445-2** of pass transistors **440** might be located directly vertically under a group of dummy steps, such as the group **338-3** of dummy steps.

Respective ones of the pass transistors **440** in a group **445** might be respectively coupled to respective ones of the vertical contacts **355** in a group **450**. For example, respective ones of the pass transistors **440** in group **445-1** might be respectively coupled to respective ones of the vertical contacts **355** in group **450-1**, and respective ones of the pass transistors **440** in group **445-2** might be respectively coupled to respective ones of the vertical contacts **355** in group **450-2**. For example, the number of vertical contacts **355** in a group **450** might be equal to the number of pass transistors **440** in a group **445**.

In some examples, the number of pass transistors **440** in a group might be limited to the number of pass transistors **440** that can be fit into the distance d, e.g., and thus ultimately by the block pitch. However, this does not limit the number of pass transistors, in that there can be multiple groups of pass transistors **440**, such as the groups **445-1** to **445-3** in the example of FIG. **4**. For example, the groups **445-1** to **445-3** may be respectively at different locations distributed along the length of staircase **334** in a direction parallel to sidewalls **357** and **362**, and thus in a direction perpendicular to the data lines and the block pitch, where the pass transistors in each of the groups **445-1** to **445-3** may be aligned along a direction that perpendicular to sidewalls **357** and **362**, and thus in a direction parallel to the data lines. For example, the groups **445-1** to **445-3** may be respectively at different locations along a direction that is parallel to the direction which the steps and/or landings extend beyond steps and/or landings above them. Therefore, the number of pass transistors **440** and the number of contacts **355** can be increased by increasing the length of staircase **334** without increasing the distance d or the block pitch.

A pass transistor **440** might be coupled to (e.g., by direct contact with) a line **460** that may be under (e.g., directly vertically under) staircase **334** and may be parallel to sidewalls **357** and **362**, as shown in FIG. **4**. A line **460** may be coupled to (e.g., by direct contact with) a line **350** that may be perpendicular to the line **460** and that may extend past and outside of sidewall **357** and be coupled to (e.g., by direct contact with) a vertical contact **355**.

In some examples, the number of pass transistors that can fit in the distance d might be fewer than the number of steps in a group of steps. Therefore, different portions of the steps in a group of steps may be coupled to different groups of pass transistors that may be at different locations distributed along the length of staircase **334**, e.g., in a direction perpendicular to the data lines and parallel to the direction that the steps and/or landings extend beyond steps and/or landings above them.

Respective ones of the pass transistors in group **445-1** might be respectively coupled to respective ones of the vertical contacts **355** of group **450-1** that may be respectively coupled to respective ones of a portion of the steps in group **335-4**, and respective ones of the pass transistors in group **445-2** might be respectively coupled to respective ones of the vertical contacts **355** of group **450-2** that may be respectively coupled to respective ones of a remaining portion of the steps in group **335-4**. Alternatively, for example, respective ones of the pass transistors in group **445-1** might be respectively coupled to respective ones of the vertical contacts **355** of group **450-1** that may be respectively coupled to landing **337-5** and a portion of the steps in group **335-4**, and respective ones of the pass transistors in group **445-2** might be respectively coupled to respective ones of the vertical contacts **355** of group **450-2** that may be respectively coupled to respective ones of landing **337-4** and a remaining portion of the steps in group **335-4**.

FIG. **5** is a top-down view of an example of a portion of a memory device that includes a memory block **202**, such as described above in conjunction with FIGS. **2**A and **2**B. Common numbering is used in FIG. **5** and FIGS. **2**A and **2**B to denote similar (e.g., the same components) in FIG. **5** and

FIGS. **2**A and **2**B, e.g., such commonly numbered components may be as described above in conjunction with FIGS. **2**A and **2**B.

In the example of FIG. **5**, a dielectric **510** may be in a landing, such as in landing **237-2**, e.g., between the sidewalls **257** and **262**. For example, an upper surface of dielectric **510** might be at the level (e.g., flush with) the upper surface of landing **237-2**, and a bottom surface of dielectric **510**, might be flush with (e.g., might form a portion of) a bottom surface of staircase **534**. Dielectric **510** may be generally formed of one or more dielectric materials, such as oxide and/or nitride. The oxide and nitride might be stacked and might alternate in some examples.

The vertical contacts **255** may extend vertically through the dielectric **510**, and thus through the landings, such as landing **237-2**, from respective ones of the pass transistors **240**-(N−2) to **240**-N respectively to respective ones of lines **560**, e.g., that might be at the vertical level of data lines **210**. The respective ones of vertical contacts **255** may be respectively coupled to (e.g., by direct contact with) respective ones of the lines **560**. Respective ones of lines **560** may extend over landing **237-2** (e.g., in a direction parallel to data lines **210**) respectively from the respective ones of vertical contacts **255** respectively to respective ones of lines **565**. The respective ones of lines **560** may be respectively coupled to (e.g., by direct contact with) the respective ones of lines **565**. Lines **565**, for example, might be at the vertical level of data lines **210** and might pass over landing **237-2** and at least a portion of the group **235-1** of steps, e.g., in a direction perpendicular to data lines **210**.

The respective ones of lines **565** may respectively extend, e.g., in a direction perpendicular to data lines **210**, respectively from the respective ones of lines **560** respectively to respective ones of lines **570**. The respective ones of lines **565** may be respectively coupled to (e.g., by direct contact with) the respective ones of lines **570**, e.g., that may be at the vertical level of data lines **210**.

The respective ones of lines **570** may respectively extend over respective ones of step **232**-(N−2), step **232**-(N−1), and landing **237-1** (e.g., in a direction parallel to data lines **210**) respectively from the respective ones of lines **565** respectively to respective ones of vertical contacts **575**. The respective ones of lines **570** may be respectively coupled to (e.g., by direct contact with) the respective ones of vertical contacts **575**. The respective ones of the vertical contacts **575** may respectively extend vertically downward from the respective ones of lines **570** respectively to the respective ones of step **232**-(N−2), step **232**-(N−1), and landing **237-1**. The respective ones of the vertical contacts **575** may be respectively coupled to (e.g., by direct contact with) the respective ones of step **232**-(N−2), step **232**-(N−1), and landing **237-1**.

In the example of FIG. **5**, the line **565** coupled to landing **237-1** may extend over the steps between landing **237-1** and landing **237-2** to a respective line **570**; the line **565** coupled to step **232**-(N−1) may extend over the steps between landing **237-2** and step **232**-(N−1) to a respective line **570**; and the line **565** coupled to step **232**-(N−2) may extend over the steps between landing **237-2** and step **232**-(N−2) to a respective line **570**.

FIG. **6** is a top-down view of an example of a portion of a memory device that includes a memory block **202**, such as described above in conjunction with FIGS. **2**A and **2**B. Common numbering is used in FIGS. **2**A, **2**B, **5**, and **6** to denote similar (e.g., the same components) in FIGS. **2**A, **2**B, **5**, and **6**. For example, such commonly numbered components may be as described above in conjunction with FIGS. **2**A, **2**B, and **5**. For example, staircase **634** in FIG. **6** might be as described for the staircase **534** in FIG. **5**, but for a difference between the location of dielectric **510** in staircase **634** and the location of dielectric **510** in staircase **534**.

In staircase **634**, for example, dielectric **510** might extend to the sidewall **262** of staircase **634**. That is, for example, an outside surface **615** of a sidewall of dielectric **510** might be flush with an outside surface **264** of sidewall **262**. Dielectric **510** might form a portion of sidewall **262**, for example.

CONCLUSION

Although specific embodiments have been illustrated and described herein, it will be appreciated by those of ordinary skill in the art that any arrangement that is calculated to achieve the same purpose may be substituted for the specific embodiments shown. Many adaptations of the embodiments will be apparent to those of ordinary skill in the art. Accordingly, this application is intended to cover any adaptations or variations of the embodiments.

What is claimed is:

1. A memory device, comprising:

a staircase comprising a flight of stairs, wherein stairs of the flight of stairs are respectively coupled to different tiers of memory cells;

a plurality of pass transistors directly under the staircase; and

wherein a different pass transistor of the plurality of pass transistors is coupled to each of the stairs of the flight of stairs; and

wherein the flight of stairs is between a first landing coupled to a tier of memory cells that is below the different tiers of memory cells to which the stairs of the flight of stairs are respectively coupled and a second landing coupled to a tier of memory cells that is above the different tiers of memory cells to which the stairs of the flight of stairs are respectively coupled.

2. The memory device of claim **1**, wherein the pass transistors of the plurality of pass transistors are aligned along a direction that a first stair in the flight of stairs extends beyond a second stair in the flight of stairs that is above the first stair.

3. The memory device of claim **1**, wherein a first portion of the plurality of pass transistors and a second portion of the plurality of pass transistors are respectively at different locations distributed along a direction that a first stair in the flight of stairs extends beyond a second stair in the flight of stairs that is above the first stair.

4. The memory device of claim **3**, wherein a different pass transistor of the plurality of pass transistors being coupled to each of the stairs of the flight of stairs comprises a different pass transistor of the first portion of the plurality of pass transistors being coupled to each vertical contact of a first group of vertical contacts, a different vertical contact of the first group of vertical contacts coupled to each stair of a first group of the stairs of the flight of stairs, and a different pass transistor of the second portion of the plurality of pass transistors being coupled to each vertical contact of a second group of vertical contacts, a different vertical contact of the second group of vertical contacts coupled to each stair of a second group of the stairs of the flight of stairs.

5. The memory device of claim **4**, wherein the first group of vertical contacts and the second group of vertical contacts are distributed along a direction that the first stair in the flight of stairs extends beyond the second stair in the flight of stairs that is above the first stair.

6. The memory device of claim 1, wherein a respective pass transistor of the plurality of pass transistors is coupled to a respective stair in the flight of stairs by a first vertical contact that is coupled to the respective pass transistor and that is coupled to a line that is above the staircase, wherein the line is coupled to one or more second vertical contacts that are between the line and the respective stair in the flight of stairs and that are coupled to the respective stair in the flight of stairs.

7. The memory device of claim 1, wherein a different pass transistor of the plurality of pass transistors being coupled to each of the stairs of the flight of stairs comprises one or more pass transistors of the plurality pass transistors being coupled to each of the stairs of the flight of stairs.

8. The memory device of claim 7, wherein the one or more pass transistors of the plurality pass transistors being coupled to each of the stairs of the flight of stairs comprises respective ones of the one or more pass transistors that are coupled to a respective stair of the flight of stairs being respectively coupled to respective ones of a plurality of global access lines or the one or more pass transistors that are coupled to the respective stair of the flight of stairs being coupled to a single global access line.

9. A memory device, comprising:

a staircase comprising a flight of stairs, wherein stairs of the flight of stairs are respectively coupled to different tiers of memory cells;

a plurality of pass transistors directly under the staircase; and

wherein a different pass transistor of the plurality of pass transistors is coupled to each of the stairs of the flight of stairs; and

wherein a pass transistor of the plurality of pass transistors is coupled to a respective stair of the flight of stairs by a vertical contact that passes through a landing, wherein the landing is coupled to a tier of memory cells other than the different tiers of memory cells to which the stairs of the flight of stairs are respectively coupled.

10. The memory device of claim 9, wherein the landing is below the flight of stairs and the tier of memory cells to which the landing is coupled is below the different tiers of memory cells to which the stairs of the flight of stairs are respectively coupled.

11. The memory device of claim 9, wherein the landing is coupled to another pass transistor that is under the staircase.

12. The memory device of claim 9, wherein a pass transistor of the plurality of pass transistors that is coupled to a stair of the flight of stairs is directly vertically under the landing.

13. The memory device of claim 9, wherein the vertical contact that passes through the landing passes through a dielectric selected from the group consisting of the dielectric being between sidewalls of the staircase and the dielectric forming a portion of a sidewall of the staircase.

14. The memory device of claim 1, wherein the plurality of pass transistors comprise a plurality of first pass transistors, and further comprising a second pass transistor directly under the first landing and coupled to a vertical contact that passes through the first landing and that is coupled to the second landing.

15. The memory device of claim 1, wherein the pass transistors of the plurality of pass transistors are configured to selectively couple the stairs of the flight of stairs to which the pass transistors of the plurality of pass transistors are coupled to global access lines.

16. The memory device of claim 1, wherein the stairs of the flight of stairs are respectively portions of access plates that are respectively coupled to the different tiers of memory cells.

17. A memory device, comprising:

a data line selectively coupled to a string of memory cells comprising a memory cell in a first tier of memory cells and a memory cell in a second tier of memory cells;

a staircase comprising a first flight comprising a first step at a first level coupled to the first tier of memory cells and a second flight comprising a second step at a second level coupled to the second tier of memory cells;

a first pass transistor under the staircase and coupled to a first vertical contact that is coupled to the first step;

a second pass transistor under the staircase and coupled to a second vertical contact that is coupled to the second step;

a landing between the first and second flights and coupled to a third tier of memory cells and coupled to a third pass transistor that is under the staircase;

wherein the first and second vertical contacts are distributed along a direction that is perpendicular to the data line.

18. The memory device of claim 17, wherein the first and second vertical contacts are outside of sidewalls of the staircase that are perpendicular to the data line.

19. The memory device of claim 17, wherein the first and second vertical contacts being distributed along the direction that is perpendicular to the data line comprises the first and second vertical contacts being distributed along a sidewall of the staircase that is perpendicular to the data line.

20. The memory device of claim 17, wherein the landing being coupled to the third pass transistor comprises the landing being coupled to a third vertical contact that is coupled to the third pass transistor, wherein the third vertical contact is aligned with the first and second vertical contacts along the direction that is perpendicular to the data line.

21. The memory device of claim 20, wherein the landing passes under a flight of dummy steps between the first and second flights.

22. The memory device of claim 17, wherein the first and second tiers are respectively at the first and second levels.

23. A memory device, comprising:

a staircase, comprising:

a first group of steps, the steps of the first group of steps respectively coupled to tiers of memory cells that are respectively at different vertical levels;

a landing above the first group of steps and coupled to a tier of memory cells that is above the tiers of memory cells coupled to the first group of steps; and

a second group of steps above the landing, the steps of the second group of steps respectively coupled to tiers of memory cells that are respectively at different vertical levels above the tier of memory cells coupled to the landing;

a plurality of vertical contacts distributed along a direction that the landing extends beyond the steps of the second group of steps; and

a plurality of pass transistors under staircase;

wherein the vertical contacts of the plurality of vertical contacts are respectively coupled to the steps in the first and second groups of steps and the landing, and are respectively coupled to the pass transistors of the plurality of pass transistors.

24. The memory device of claim **23**, wherein the first group of steps has a different number of steps than the second group of steps.

25. The memory device of claim **23**, wherein a pass transistor of the plurality of pass transistors that is coupled to a vertical contact coupled to a step in the second group of steps is directly under the landing.

26. The memory device of claim **23**, wherein the landing is a first landing, the plurality of pass transistors are a plurality of first pass transistors, and further comprising:

a second landing above the second group of steps and coupled to a tier of memory cells above the tiers of memory cells coupled to the second group of steps; and

a second pass transistor directly under the first landing that is coupled to the second landing.

* * * * *