US 20200168276A1

(19) United States

(12) Patent Application Publication

(10) Pub. No.: US 2020/0168276 A1

(43) Pub. Date: May 28, 2020

Yang

(54) **PRE-CHARGE VOLTAGE FOR INHIBITING UNSELECTED NAND MEMORY CELL PROGRAMMING**

(71) Applicant: **SanDisk Technologies LLC**, Addison, TX (US)

(72) Inventor: **Xiang Yang**, Santa Clara, CA (US)

(73) Assignee: **SanDisk Technologies LLC**, Addison, TX (US)

(21) Appl. No.: **16/200,007**

(22) Filed: **Nov. 26, 2018**

Publication Classification

(51) **Int. Cl.**

G11C 16/04	(2006.01)
G11C 16/10	(2006.01)
G11C 16/12	(2006.01)
G11C 16/34	(2006.01)

(52) **U.S. Cl.**

CPC ***G11C 16/0433*** (2013.01); ***G11C 16/045*** (2013.01); ***G11C 16/3459*** (2013.01); ***G11C 16/107*** (2013.01); ***G11C 16/12*** (2013.01); ***G11C 16/0466*** (2013.01)

(57) **ABSTRACT**

Techniques are provided for pre-charging NAND strings during a programming operation. The NAND strings are in a block that is divided into vertical sub-blocks. During a pre-charge phase of a programming operation, an overdrive voltage is applied to some memory cells and a bypass voltage is applied to other memory cells. The overdrive voltage allows the channel of an unselected NAND string to adequately charge during the pre-charge phase. Adequate charging of the channel helps the channel voltage to boost to a sufficient level to inhibit programming of an unselected memory cell during a program phase. Thus, program disturb is prevented, or at least reduced. The technique allows, for example, programming of memory cells in a middle vertical sub-block without causing program disturb of memory cells that are not to receive programming.

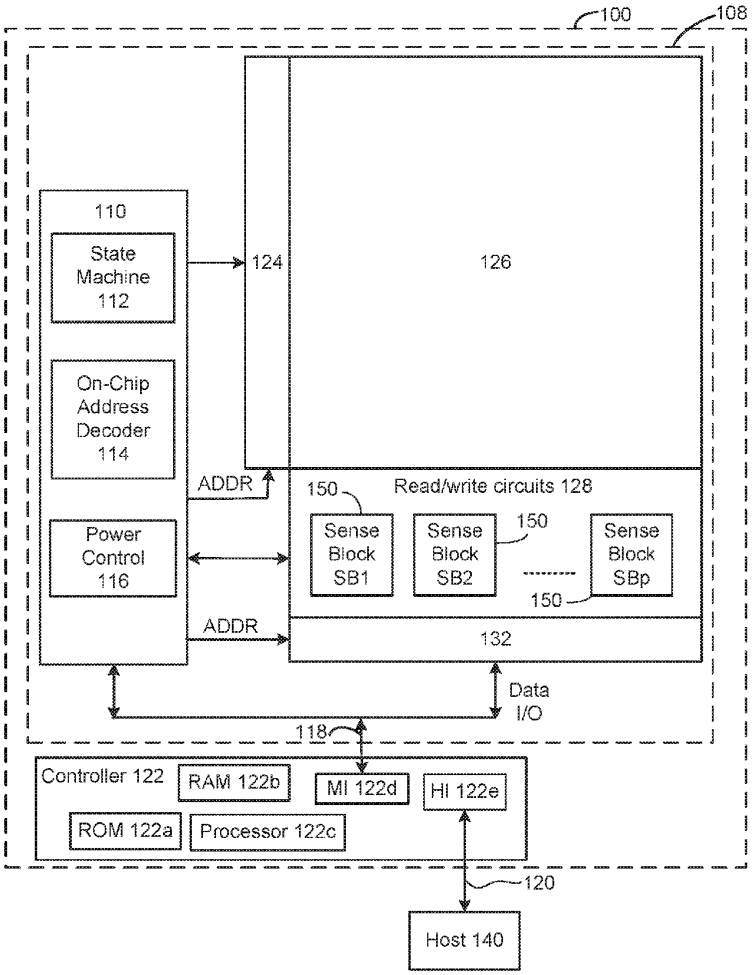

Fig. 1

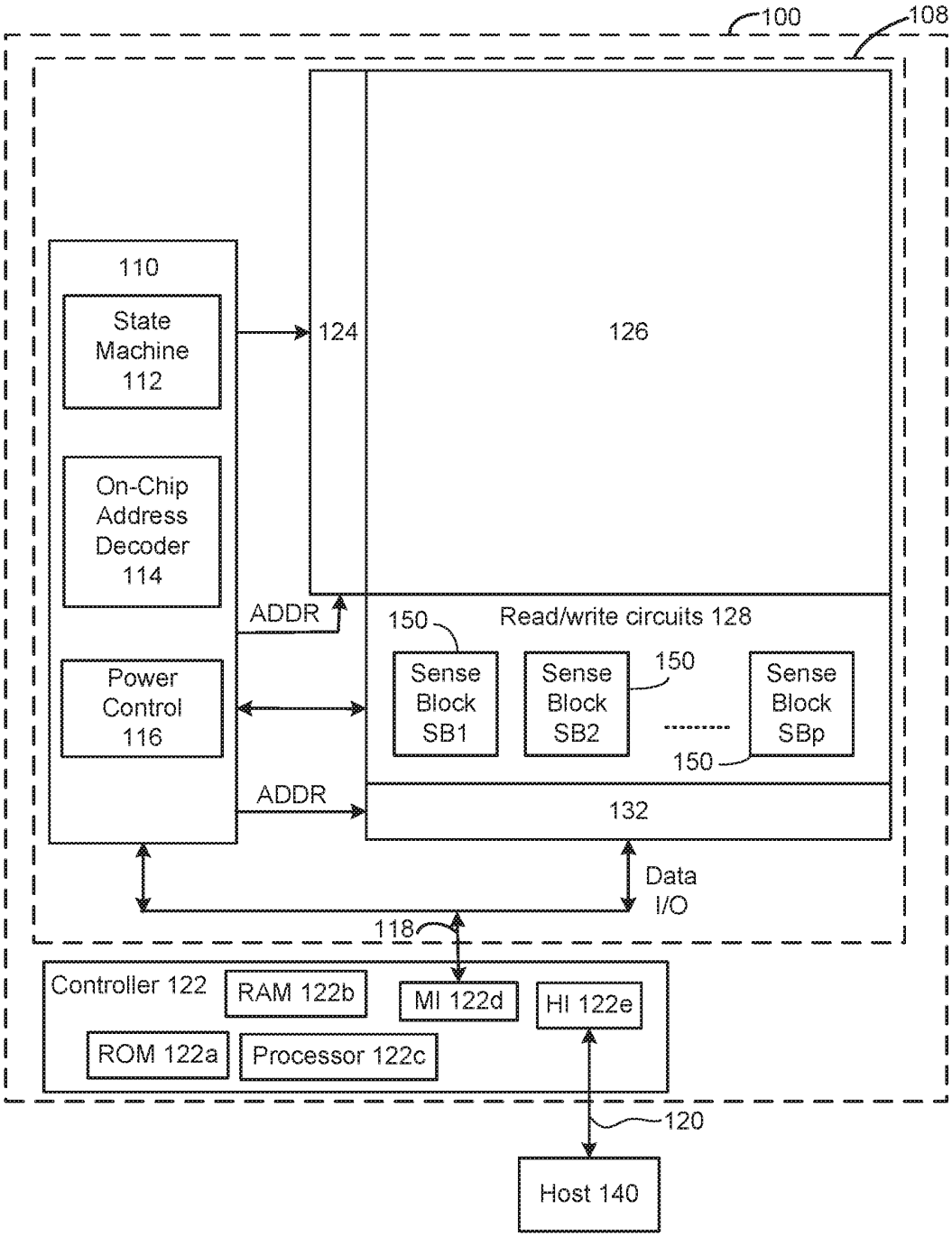
100
108
110
State Machine 112
On-Chip Address Decoder 114
Power Control 116
124
126
ADDR
150
Read/write circuits 128
Sense Block SB1
Sense Block SB2
Sense Block SBp
150
150
ADDR
132
Data I/O
118
Controller 122
RAM 122b
MI 122d
HI 122e
ROM 122a
Processor 122c
120
Host 140

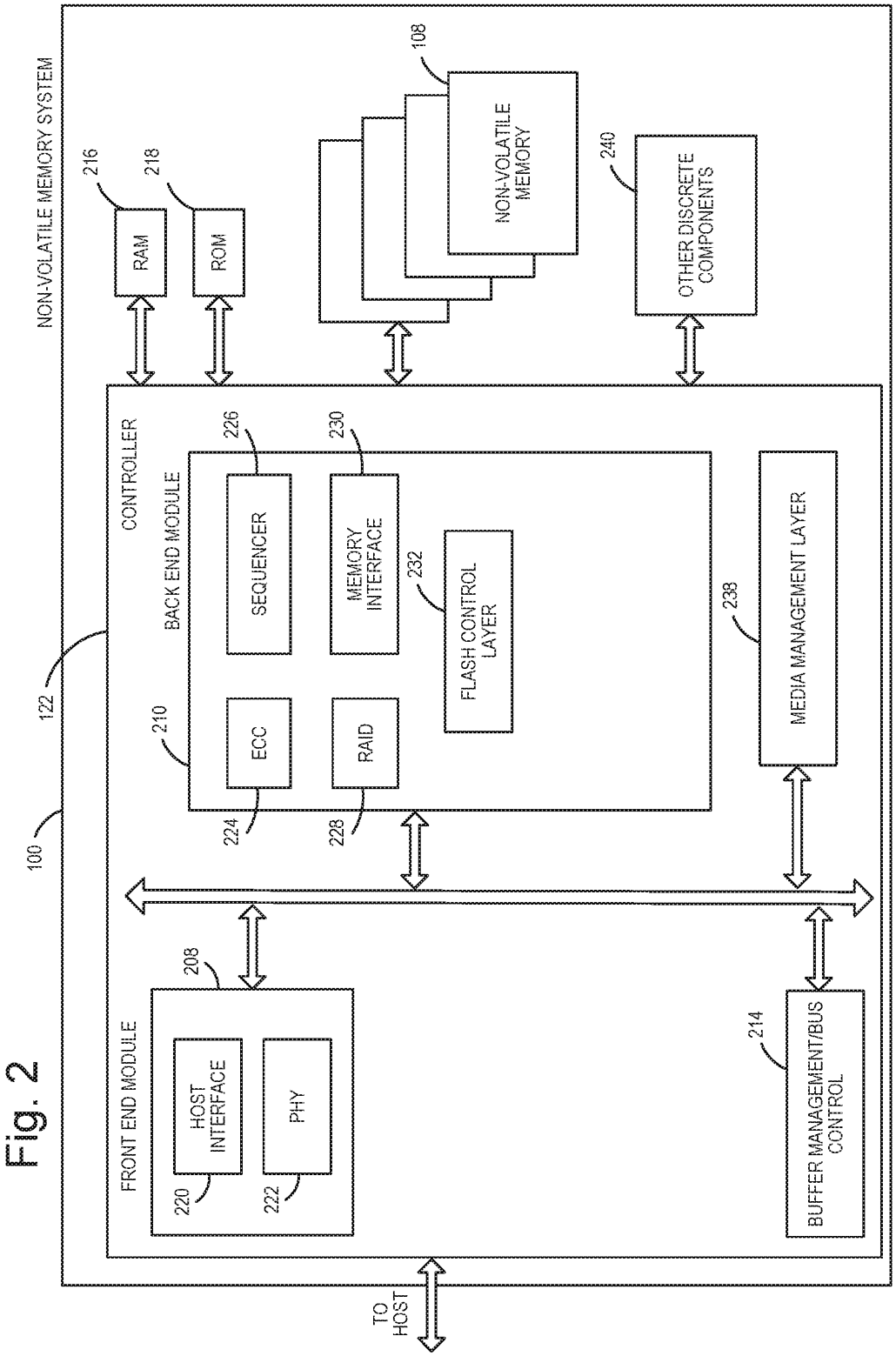
NON-VOLATILE MEMORY SYSTEM
100
122
CONTROLLER
BACK END MODULE
210
SEQUENCER
226
MEMORY INTERFACE
230
FLASH CONTROL LAYER
232
ECC
224
RAID
228
MEDIA MANAGEMENT LAYER
238
RAM
216
ROM
218
NON-VOLATILE MEMORY
108
OTHER DISCRETE COMPONENTS
240
FRONT END MODULE
208
HOST INTERFACE
220
PHY
222
BUFFER MANAGEMENT/BUS CONTROL
214
TO HOST

Fig. 2

Figure 3

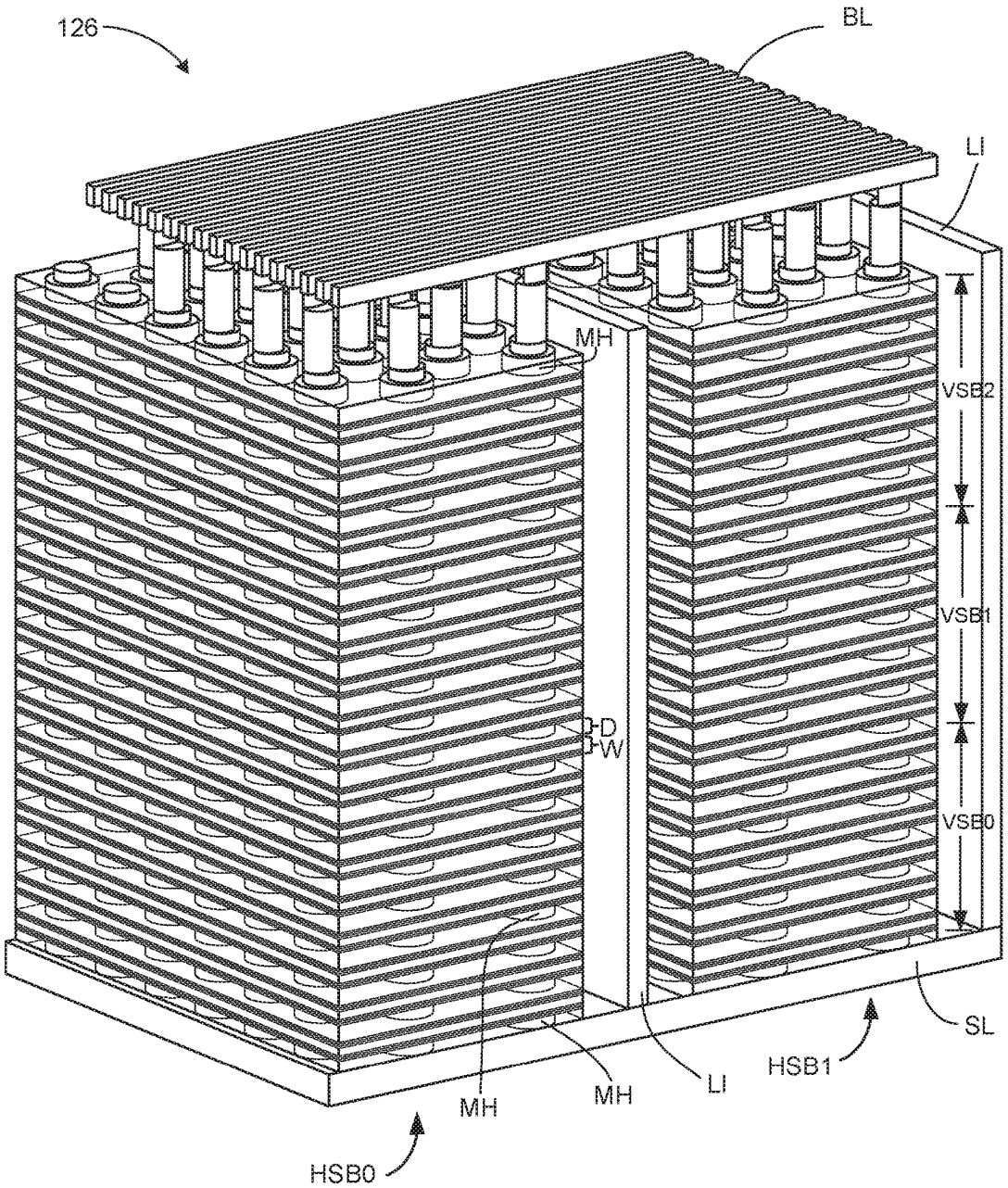

Figure 4A

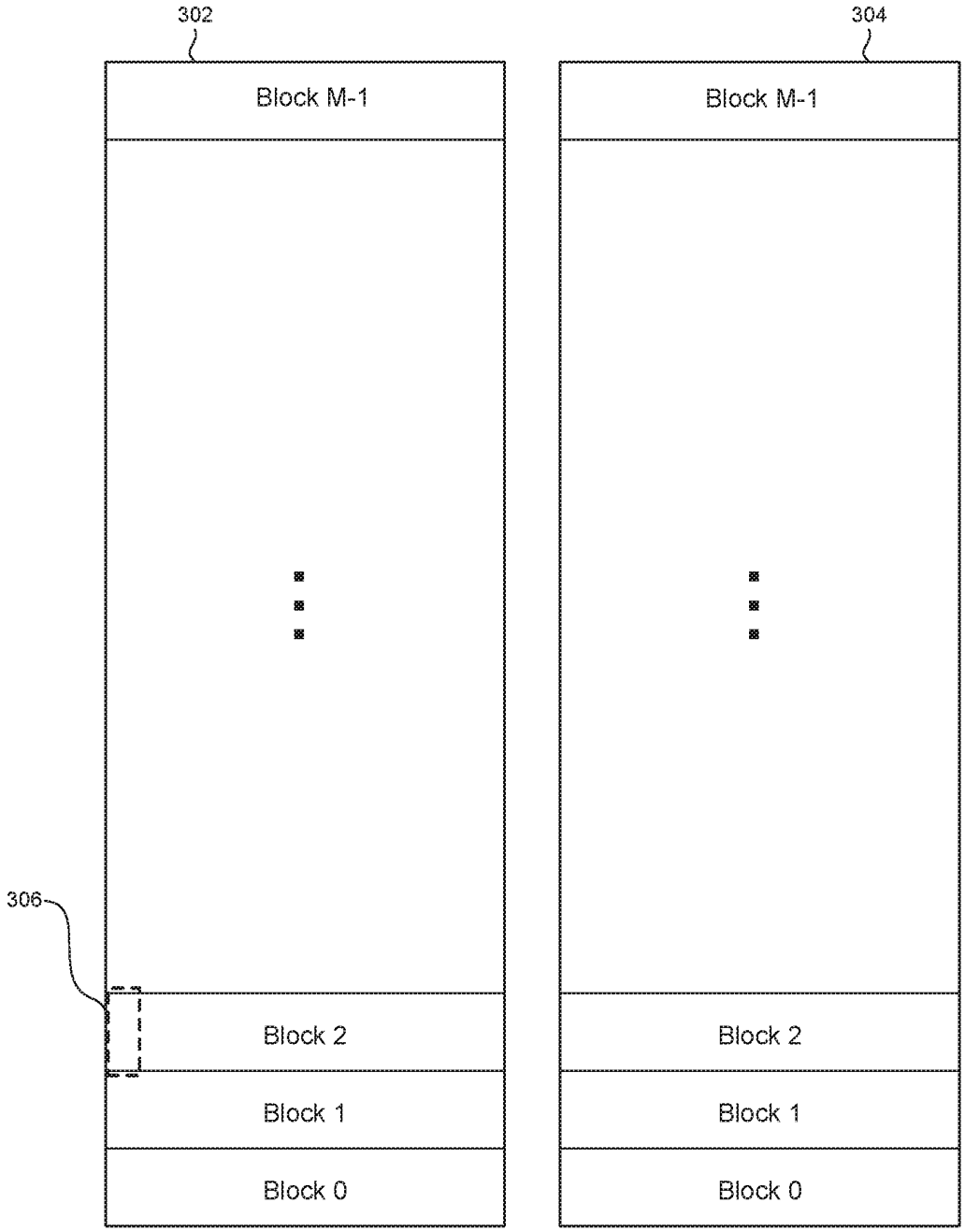
302
304
Block M-1
Block M-1
306
Block 2
Block 2
Block 1
Block 1
Block 0
Block 0

Figure 4B

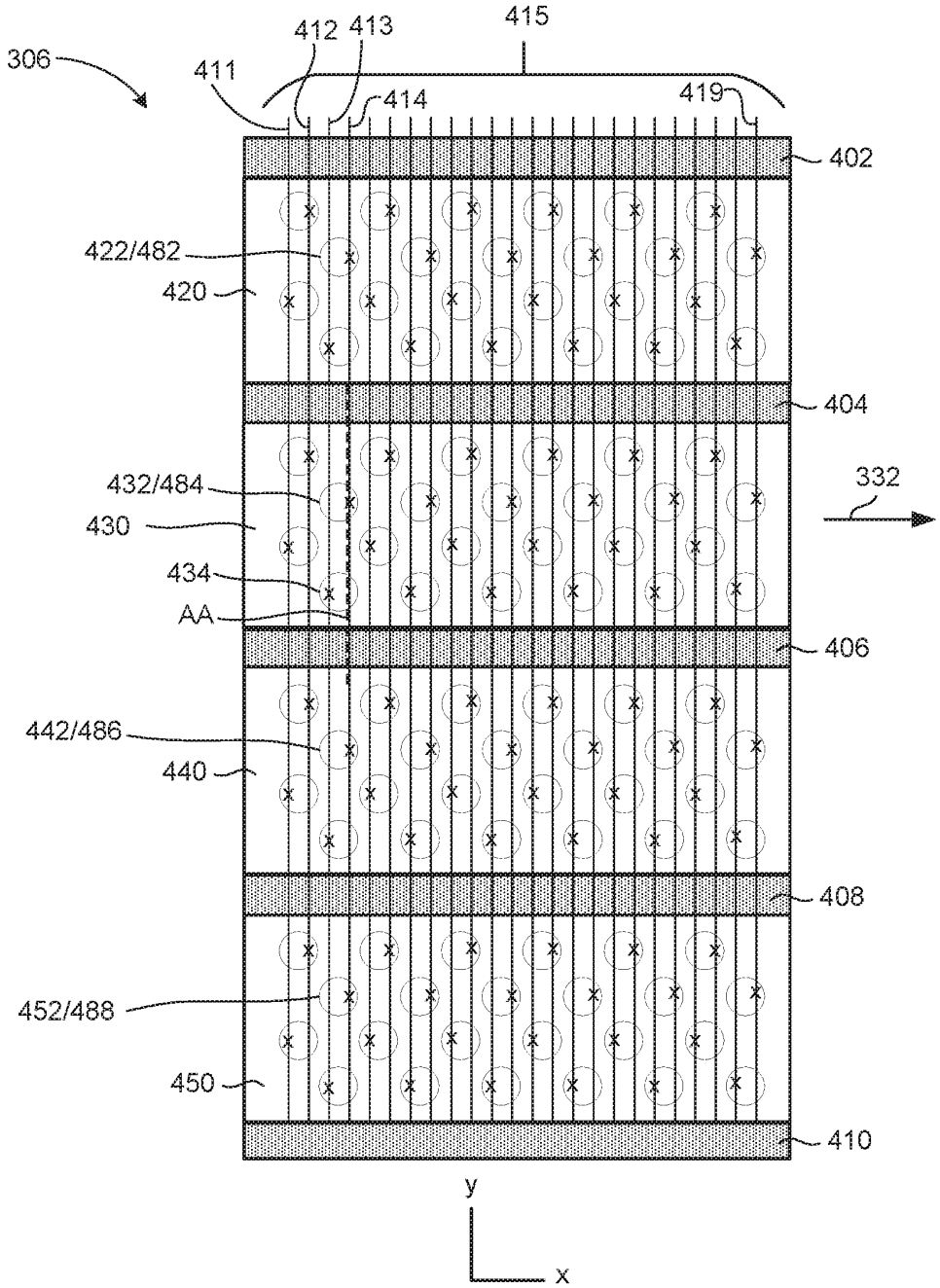
306
411
412
413
414
415
419
402
422/482
420
404
432/484
430
332
434
AA
406
442/486
440
408
452/488
450
410
y
x

Fig. 4C

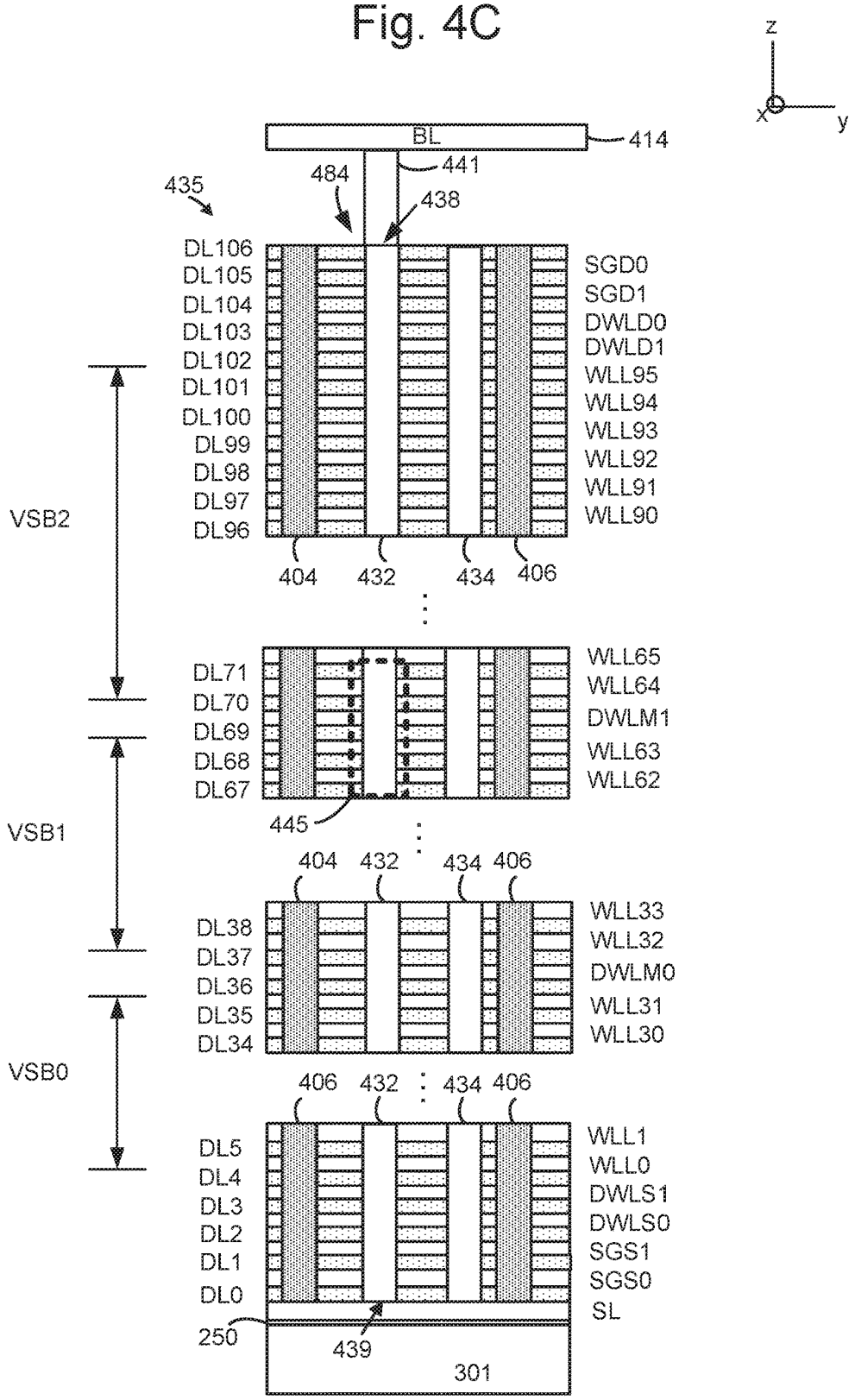
z
x
y
BL
414
441
484
438
435
DL106
DL105
DL104
DL103
DL102
DL101
DL100
DL99
DL98
DL97
DL96
SGD0
SGD1
DWLD0
DWLD1
WLL95
WLL94
WLL93
WLL92
WLL91
WLL90
VSB2
404
432
434
406
DL71
DL70
DL69
DL68
DL67
WLL65
WLL64
DWLM1
WLL63
WLL62
VSB1
445
404
432
434
406
DL38
DL37
DL36
DL35
DL34
WLL33
WLL32
DWLM0
WLL31
WLL30
VSB0
406
432
434
406
DL5
DL4
DL3
DL2
DL1
DL0
WLL1
WLL0
DWLS1
DWLS0
SGS1
SGS0
SL
250
439
301

Fig. 4D

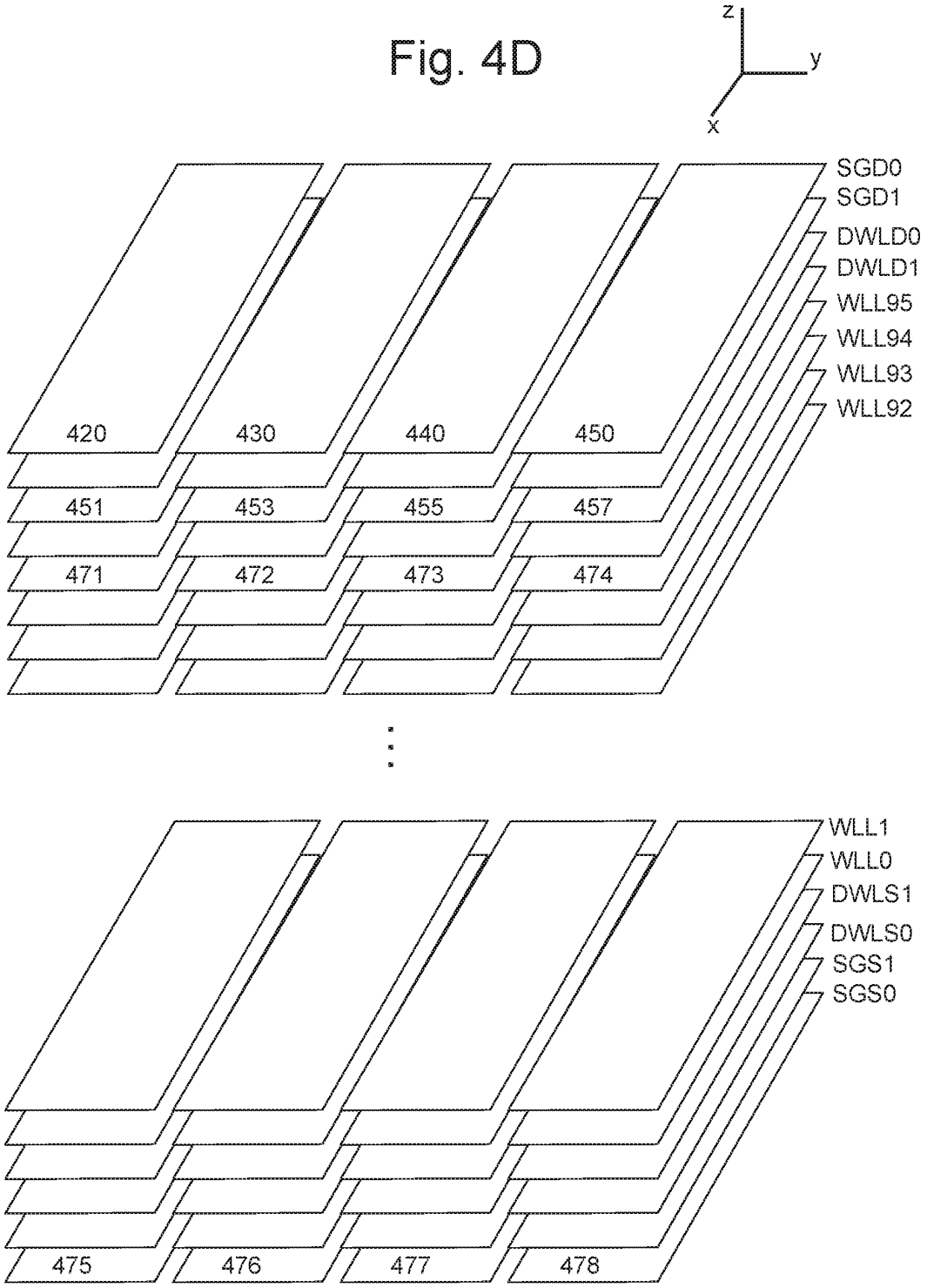
z
y
x
SGD0
SGD1
DWLD0
DWLD1
WLL95
WLL94
WLL93
WLL92
420
430
440
450
451
453
455
457
471
472
473
474
WLL1
WLL0
DWLS1
DWLS0
SGS1
SGS0
475
476
477
478

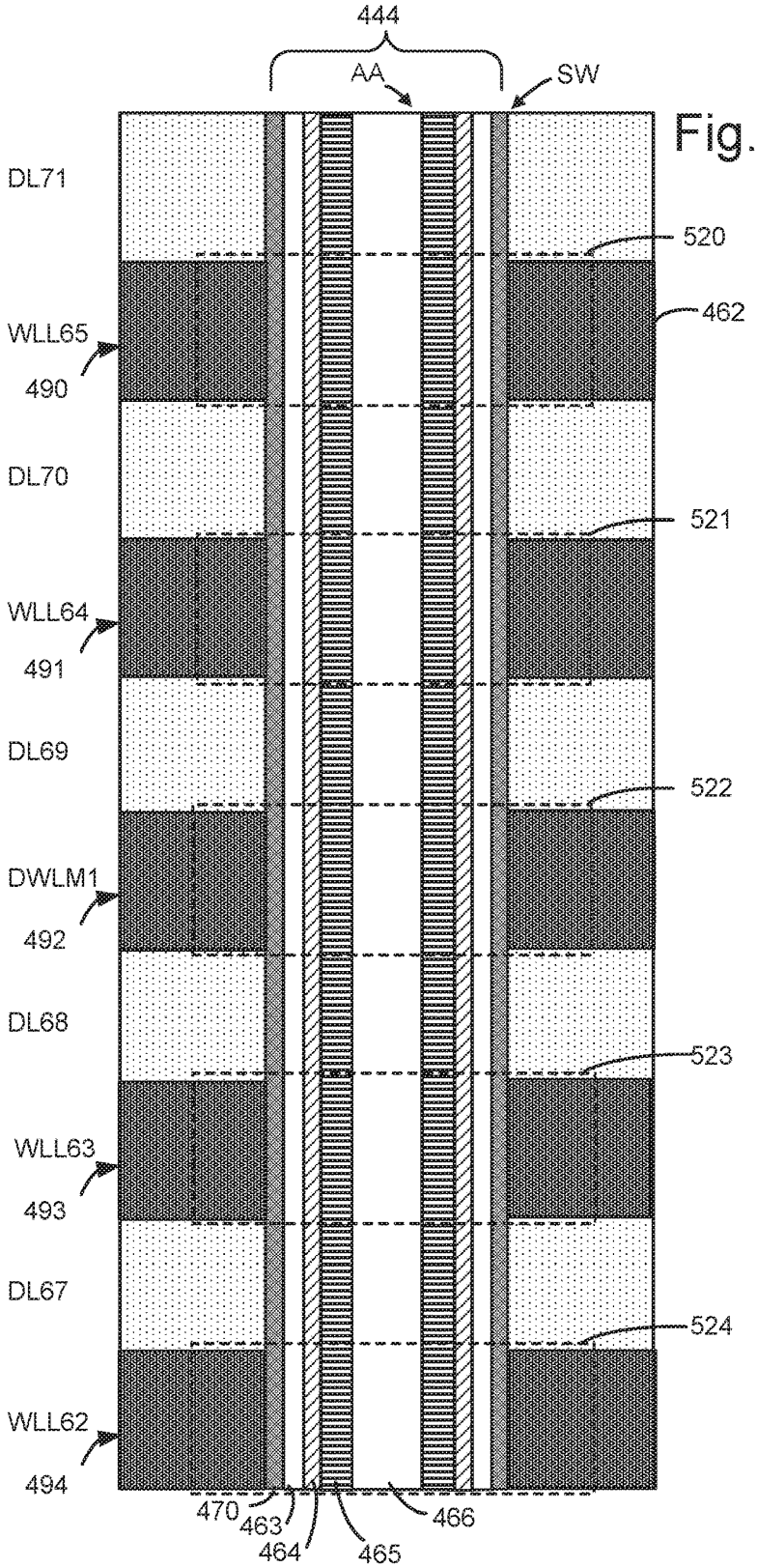
444
AA
SW
DL71
520
462
WLL65
490
DL70
521
WLL64
491
DL69
522
DWLM1
492
DL68
523
WLL63
493
DL67
524
WLL62
494
470
463
464
465
466

Fig. 4E

Figure 4F

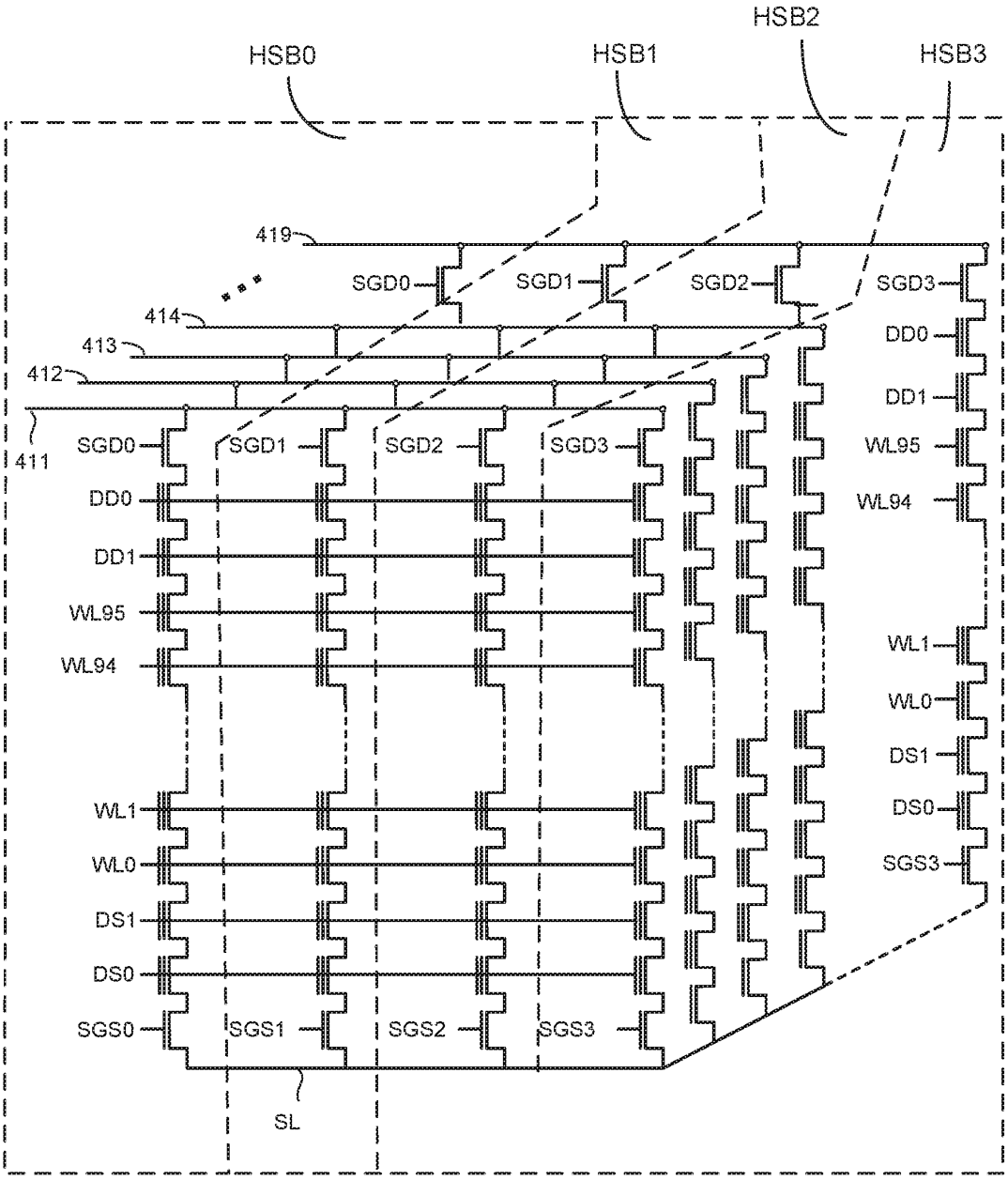
HSB0
HSB1
HSB2
HSB3
419
414
413
412
411
SGD0
SGD1
SGD2
SGD3
DD0
DD1
WL95
WL94
WL1
WL0
DS1
DS0
SGS0
SGS1
SGS2
SGS3
SL

Figure 4G

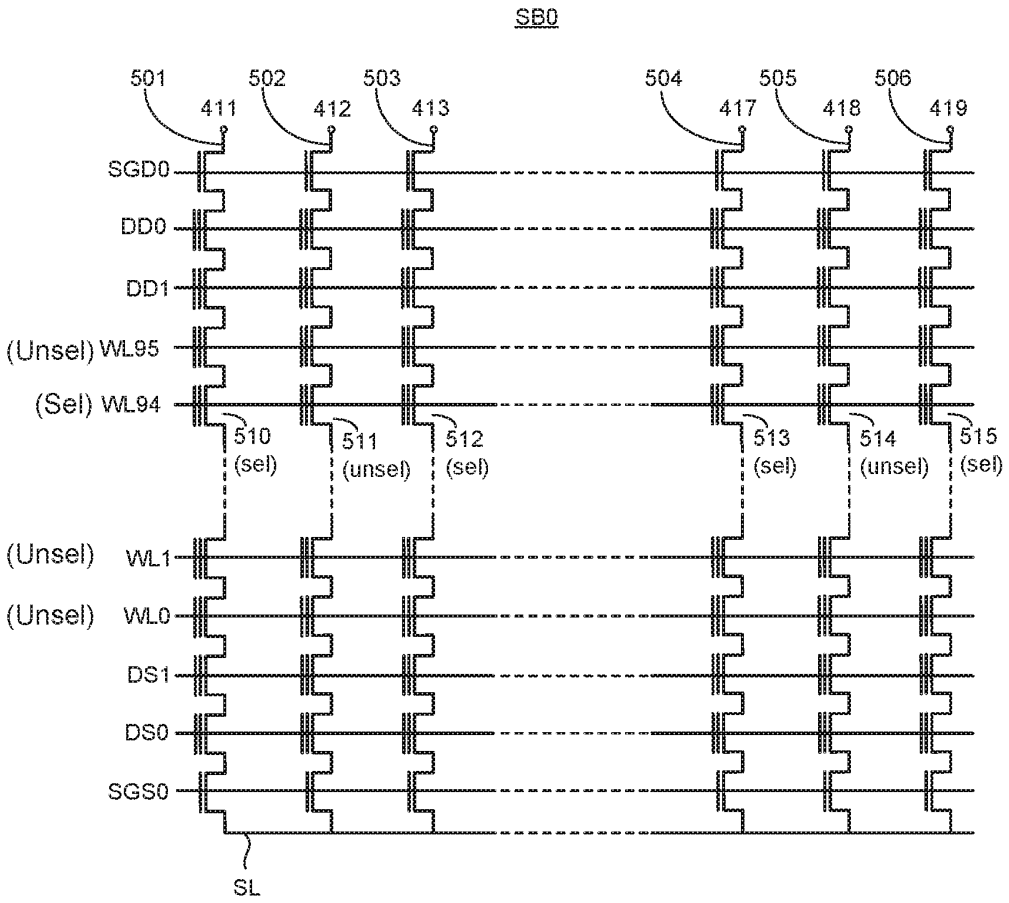
SB0
501
502
503
504
505
506
411
412
413
417
418
419
SGD0
DD0
DD1
(Unsel) WL95
(Sel) WL94
510 (sel)
511 (unsel)
512 (sel)
513 (sel)
514 (unsel)
515 (sel)
(Unsel) WL1
(Unsel) WL0
DS1
DS0
SGS0
SL

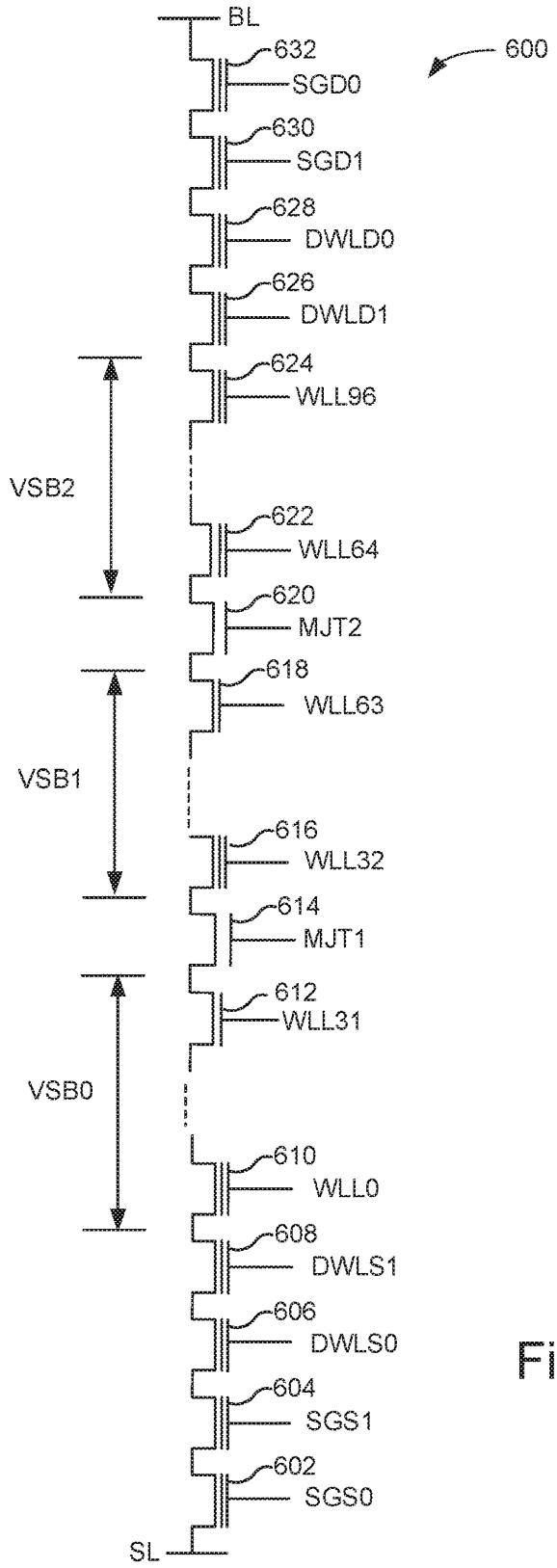
BL
632
SGD0
600
630
SGD1
628
DWLD0
626
DWLD1
624
WLL96
VSB2
622
WLL64
620
MJT2
618
WLL63
VSB1
616
WLL32
614
MJT1
612
WLL31
VSB0
610
WLL0
608
DWLS1
606
DWLS0
604
SGS1
602
SGS0
SL

Fig. 4H

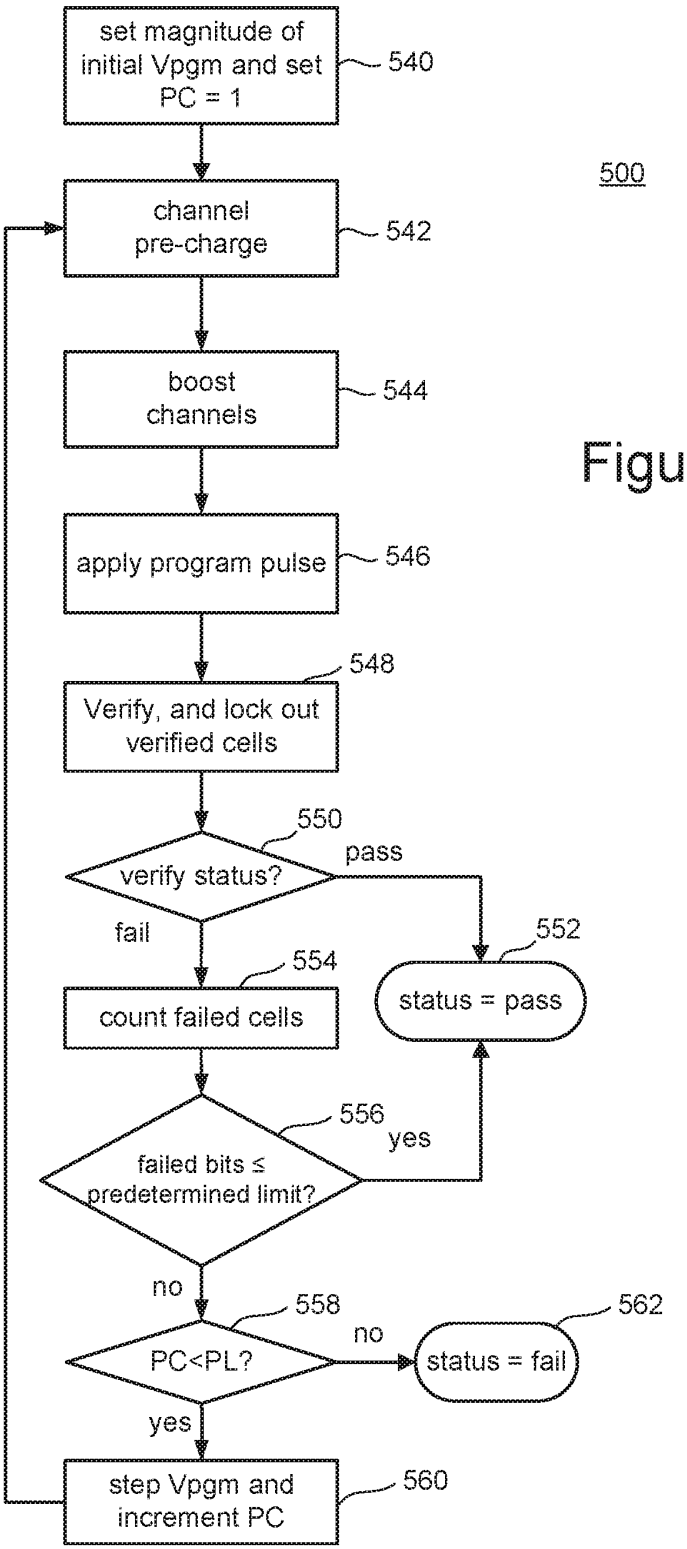
set magnitude of initial Vpgm and set PC = 1
540
500
channel pre-charge
542
boost channels
544
apply program pulse
546
548
Verify, and lock out verified cells
550
verify status?
pass
fail
552
status = pass
554
count failed cells
556
yes
failed bits ≤ predetermined limit?
no
558
562
no
PC<PL?
status = fail
yes
step Vpgm and increment PC
560

Figure 5

Figure 6

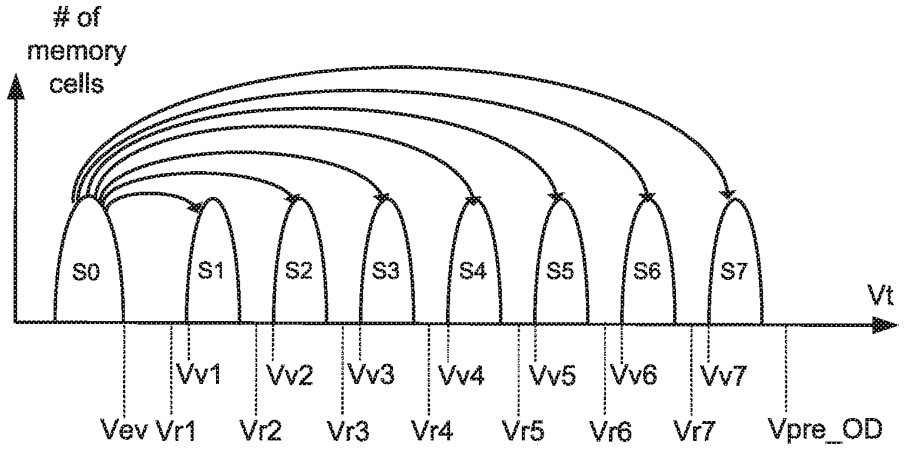
# of memory cells
S0
S1
S2
S3
S4
S5
S6
S7
Vt
Vv1
Vv2
Vv3
Vv4
Vv5
Vv6
Vv7
Vev
Vr1
Vr2
Vr3
Vr4
Vr5
Vr6
Vr7
Vpre_OD

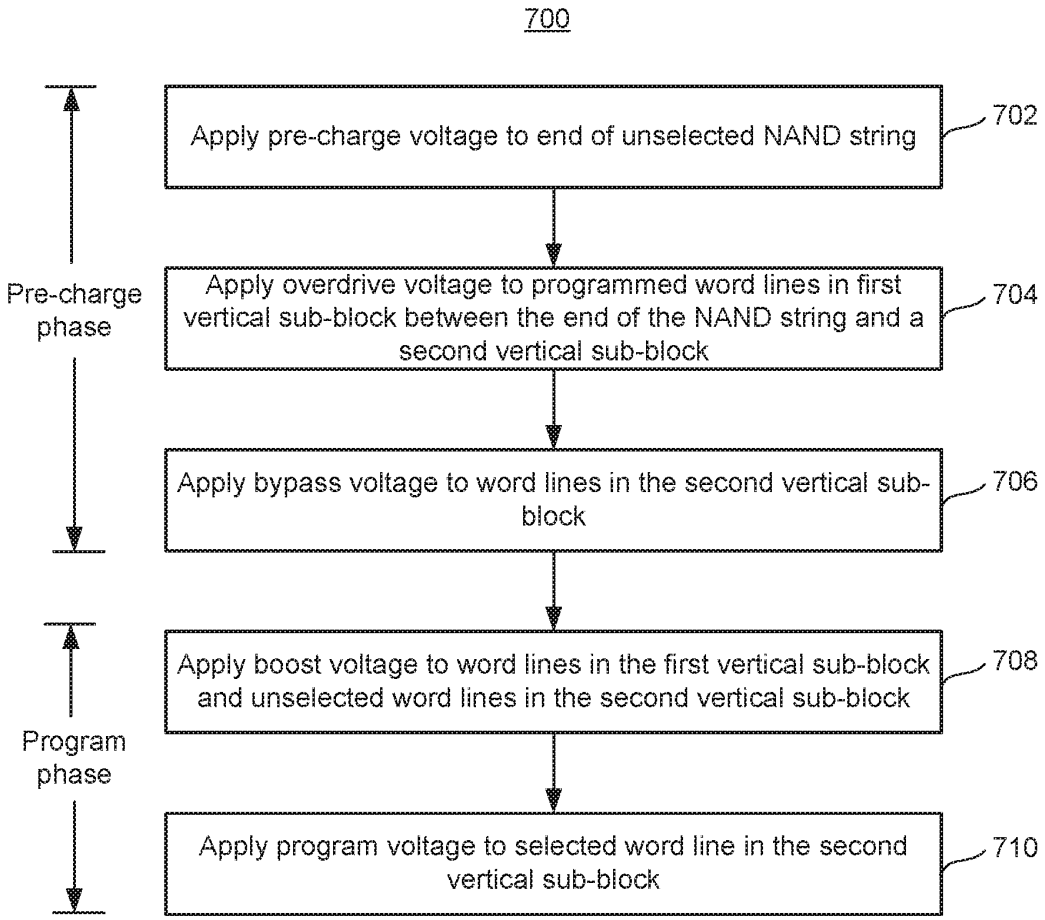
700
Pre-charge phase
Program phase
Apply pre-charge voltage to end of unselected NAND string
702
Apply overdrive voltage to programmed word lines in first vertical sub-block between the end of the NAND string and a second vertical sub-block
704
Apply bypass voltage to word lines in the second vertical sub-block
706
Apply boost voltage to word lines in the first vertical sub-block and unselected word lines in the second vertical sub-block
708
Apply program voltage to selected word line in the second vertical sub-block
710

Figure 7

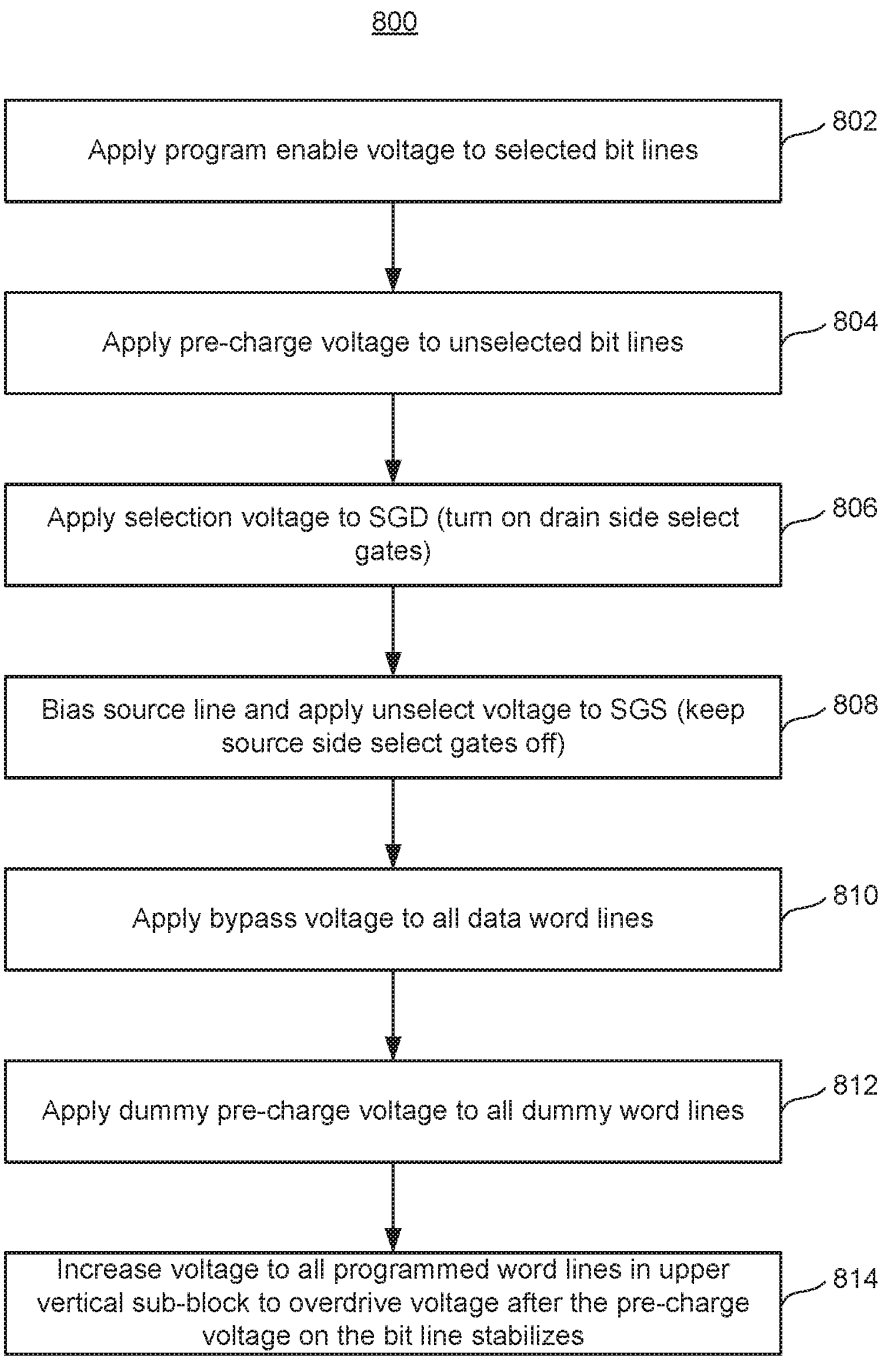
800
Apply program enable voltage to selected bit lines
802
Apply pre-charge voltage to unselected bit lines
804
Apply selection voltage to SGD (turn on drain side select gates)
806
Bias source line and apply unselect voltage to SGS (keep source side select gates off)
808
Apply bypass voltage to all data word lines
810
Apply dummy pre-charge voltage to all dummy word lines
812
Increase voltage to all programmed word lines in upper vertical sub-block to overdrive voltage after the pre-charge voltage on the bit line stabilizes
814

Figure 8A

FIG. 8B

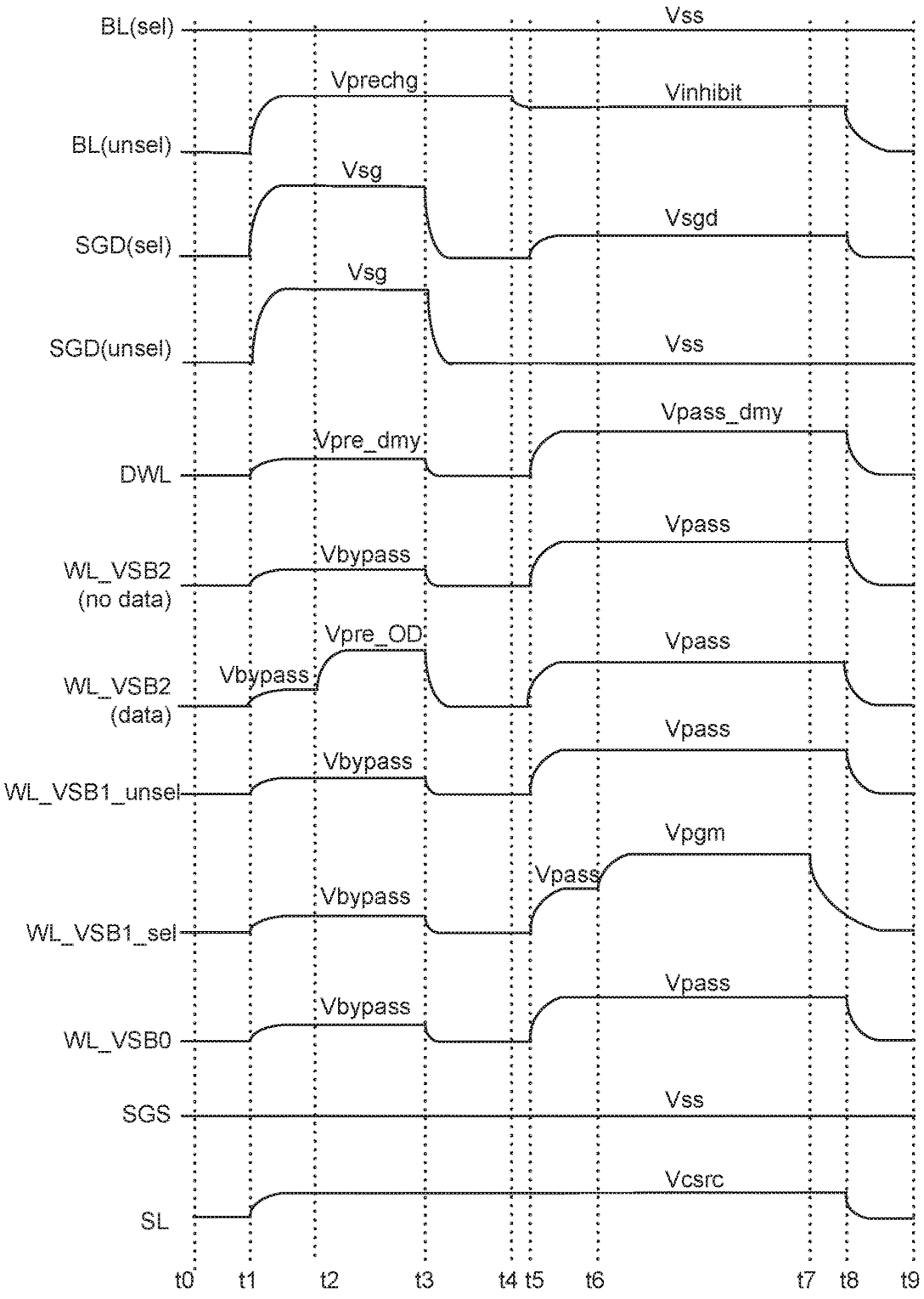
BL(sel)
Vss
BL(unsel)
Vprechg
Vinhibit
SGD(sel)
Vsg
Vsgd
SGD(unsel)
Vsg
Vss
DWL
Vpre_dmy
Vpass_dmy
WL_VSB2
(no data)
Vbypass
Vpass
WL_VSB2
(data)
Vbypass
Vpre_OD
Vpass
WL_VSB1_unsel
Vbypass
Vpass
WL_VSB1_sel
Vbypass
Vpass
Vpgm
WL_VSB0
Vbypass
Vpass
SGS
Vss
SL
Vcsrc
t0
t1
t2
t3
t4
t5
t6
t7
t8
t9

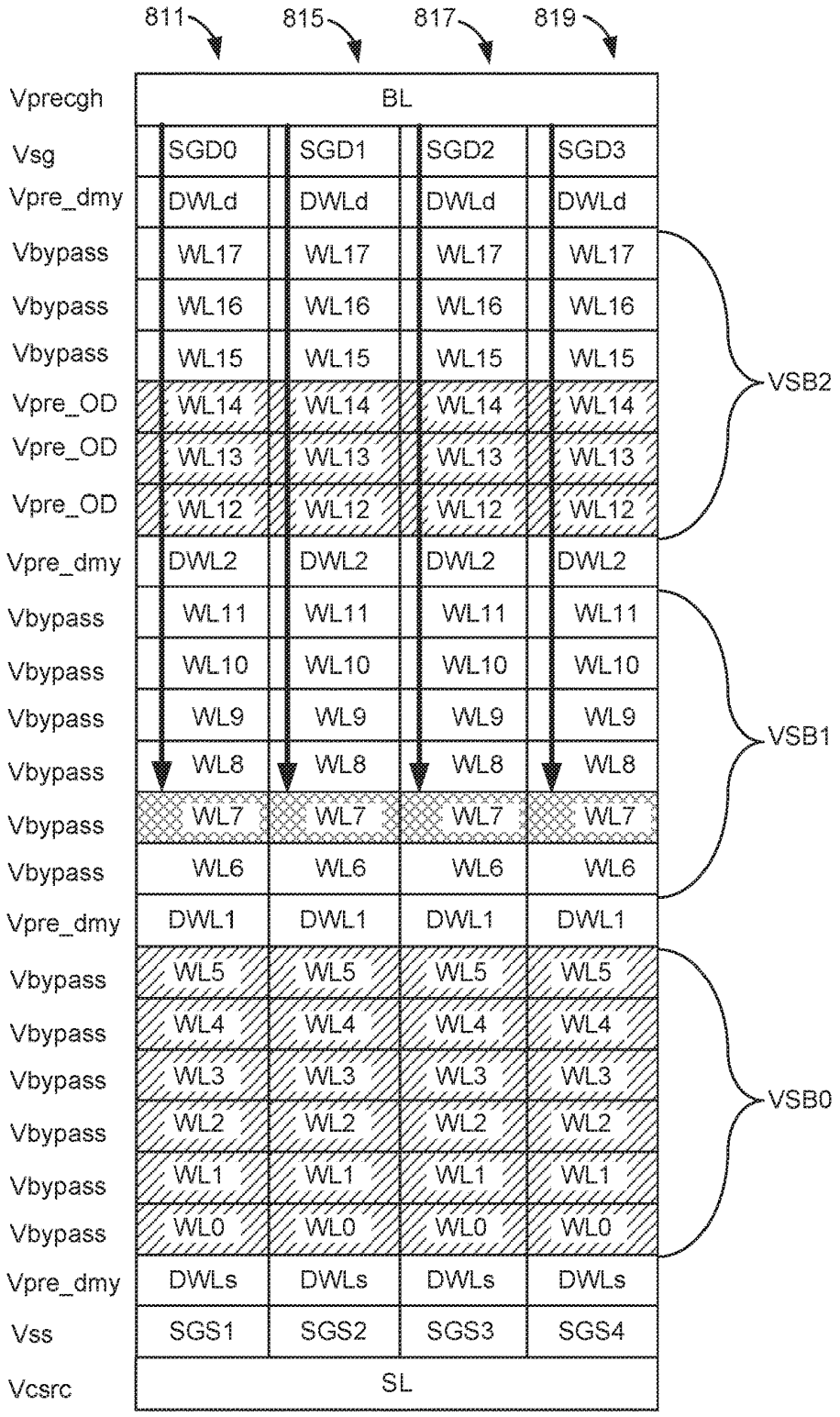
811
815
817
819
Vprecgh
BL
Vsg
SGD0
SGD1
SGD2
SGD3
Vpre_dmy
DWLd
Vbypass
WL17
WL16
WL15
Vpre_OD
WL14
WL13
WL12
VSB2
DWL2
WL11
WL10
WL9
WL8
WL7
WL6
DWL1
VSB1
WL5
WL4
WL3
WL2
WL1
WL0
VSB0
DWLs
Vss
SGS1
SGS2
SGS3
SGS4
Vcsrc
SL

FIG. 8C

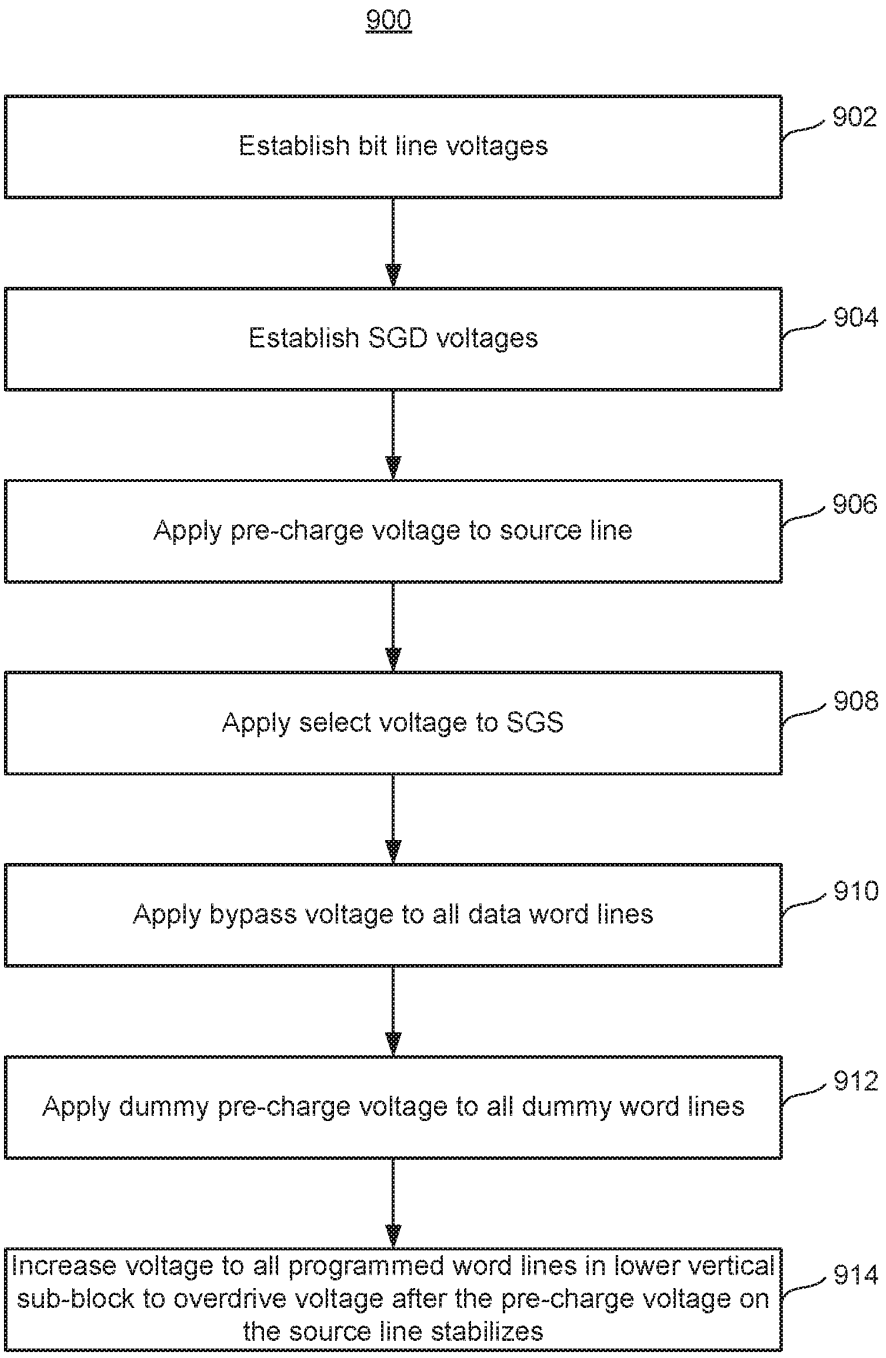
900
Establish bit line voltages
902
Establish SGD voltages
904
Apply pre-charge voltage to source line
906
Apply select voltage to SGS
908
Apply bypass voltage to all data word lines
910
Apply dummy pre-charge voltage to all dummy word lines
912
Increase voltage to all programmed word lines in lower vertical sub-block to overdrive voltage after the pre-charge voltage on the source line stabilizes
914

Figure 9A

Figure 9B

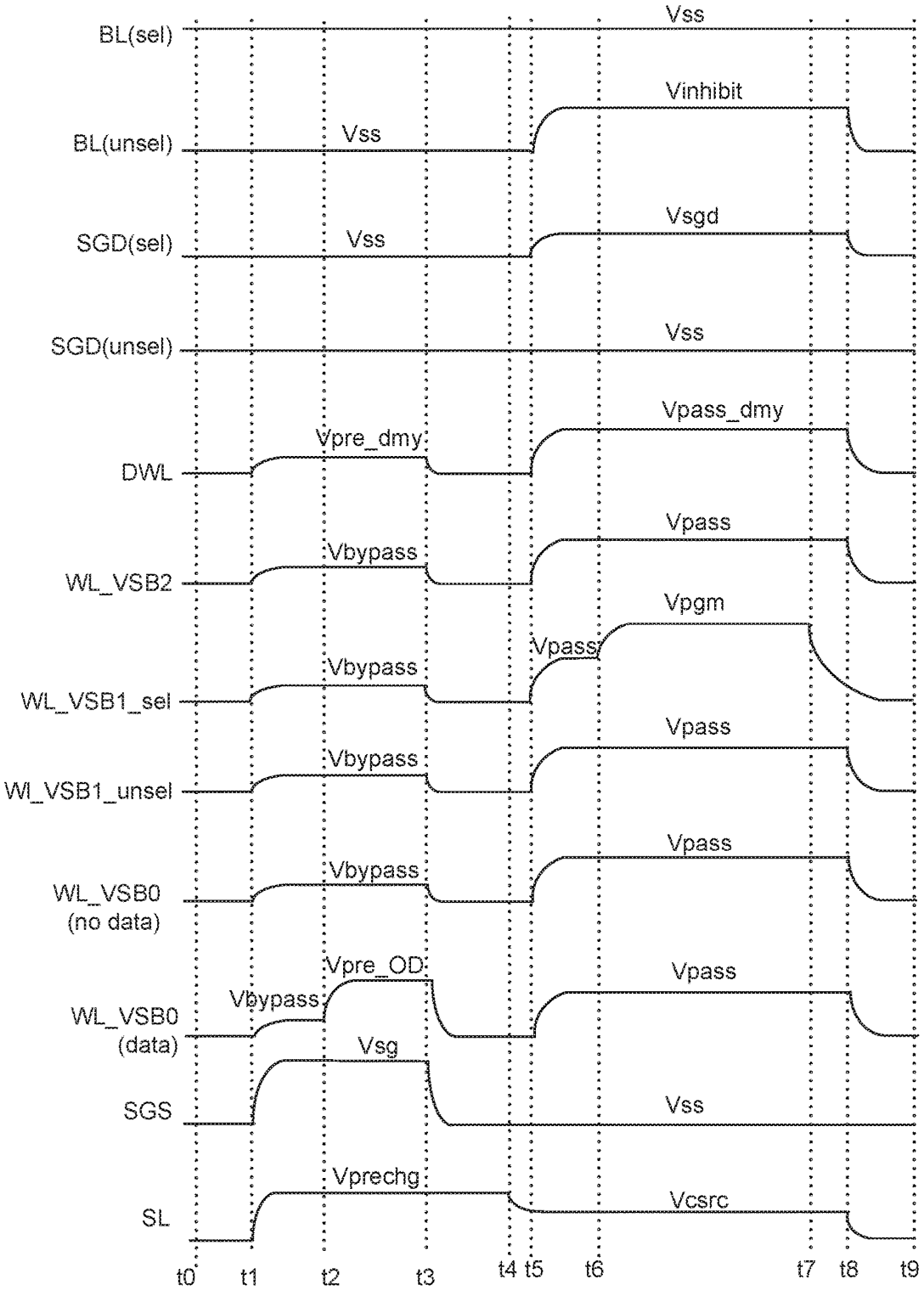
BL(sel)
Vss
BL(unsel)
Vss
Vinhibit
SGD(sel)
Vss
Vsgd
SGD(unsel)
Vss
DWL
Vpre_dmy
Vpass_dmy
WL_VSB2
Vbypass
Vpass
WL_VSB1_sel
Vbypass
Vpass
Vpgm
Wl_VSB1_unsel
Vbypass
Vpass
WL_VSB0
(no data)
Vbypass
Vpass
WL_VSB0
(data)
Vbypass
Vpre_OD
Vpass
SGS
Vsg
Vss
SL
Vprechg
Vcsrc
t0
t1
t2
t3
t4
t5
t6
t7
t8
t9

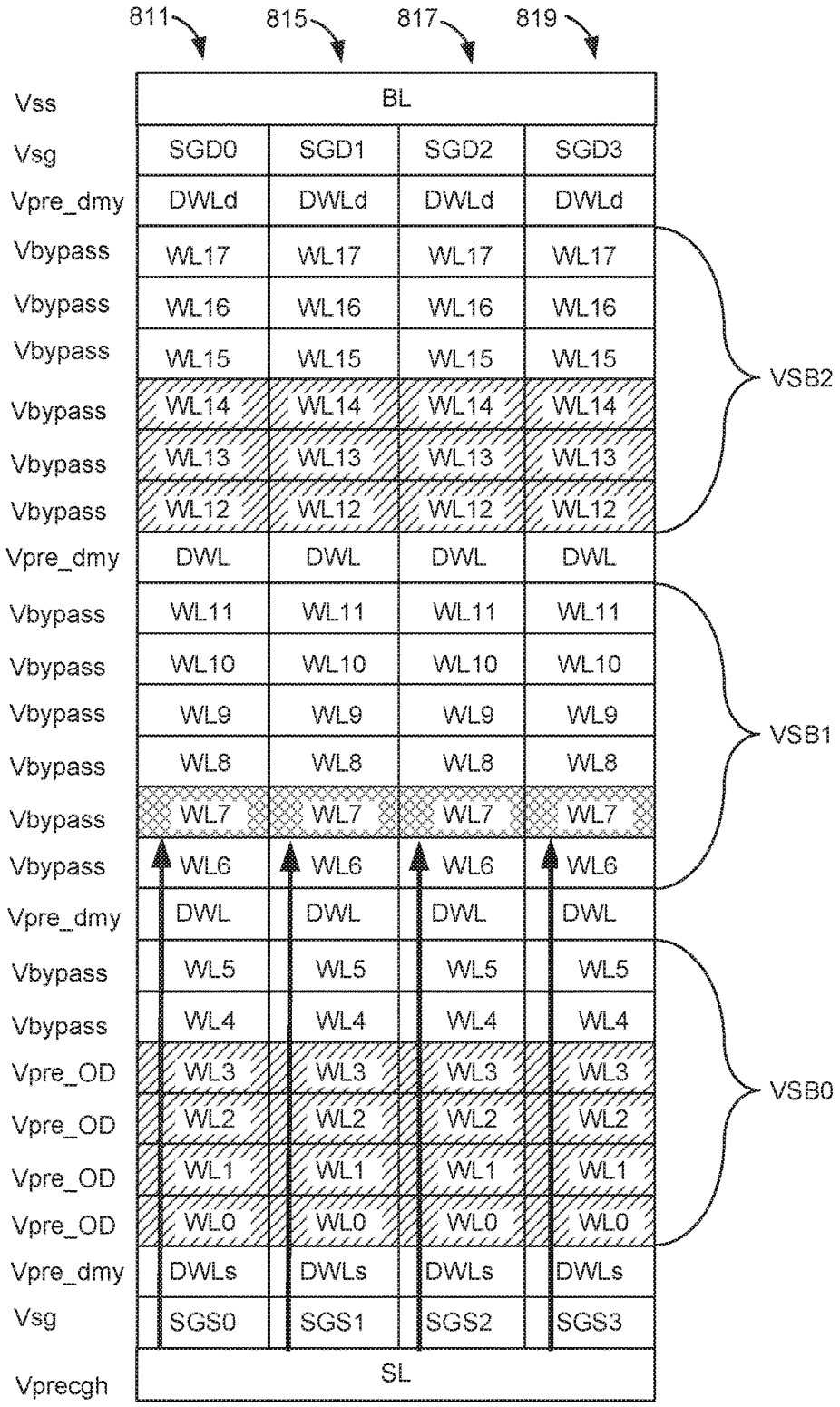
811
815
817
819
Vss
BL
Vsg
SGD0
SGD1
SGD2
SGD3
Vpre_dmy
DWLd
Vbypass
WL17
WL16
WL15
WL14
WL13
WL12
VSB2
Vpre_dmy
DWL
WL11
WL10
WL9
WL8
WL7
WL6
VSB1
Vpre_dmy
DWL
WL5
WL4
Vpre_OD
WL3
WL2
WL1
WL0
VSB0
Vpre_dmy
DWLs
Vsg
SGS0
SGS1
SGS2
SGS3
Vprecgh
SL

Figure 9C

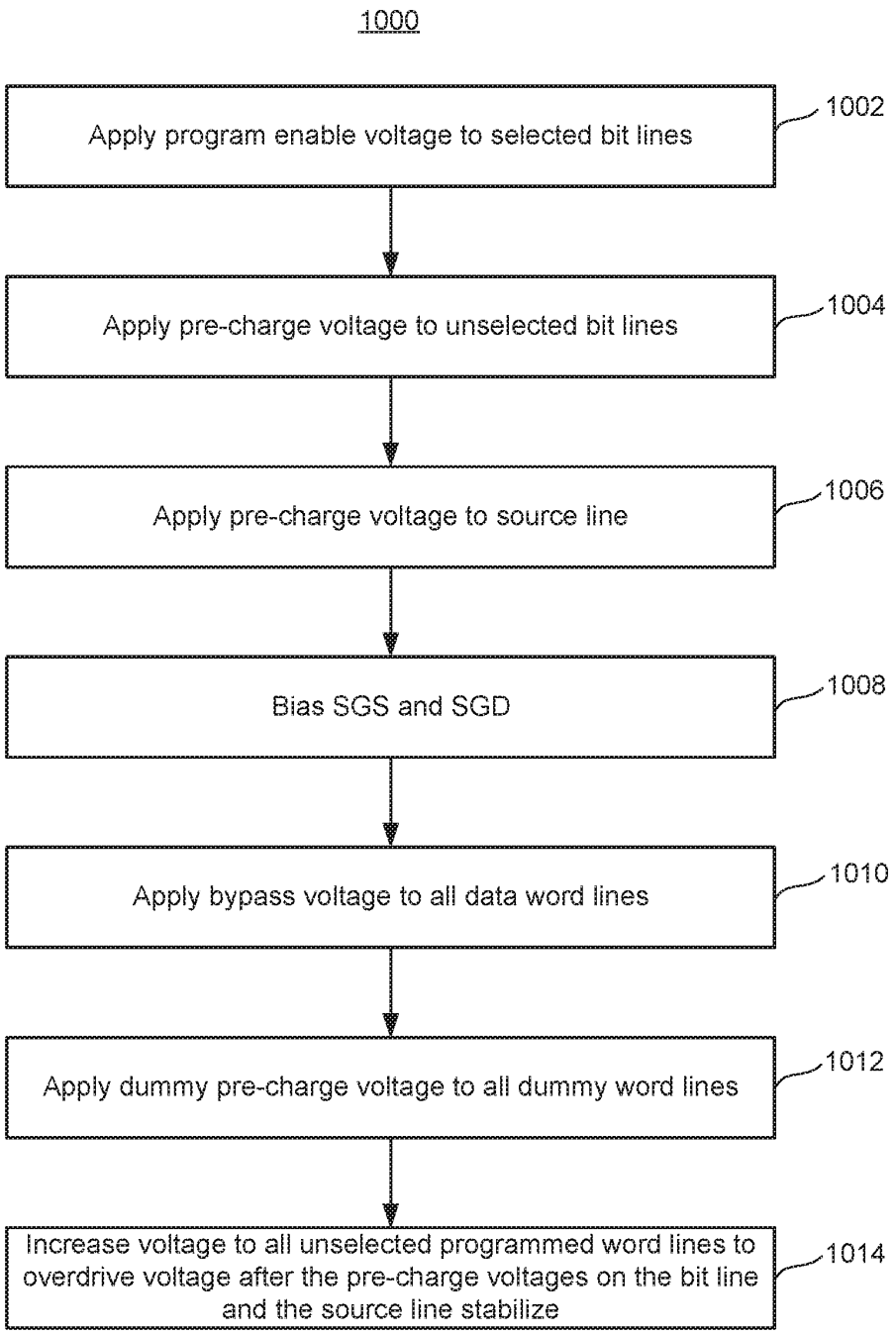
1000
Apply program enable voltage to selected bit lines
1002
Apply pre-charge voltage to unselected bit lines
1004
Apply pre-charge voltage to source line
1006
Bias SGS and SGD
1008
Apply bypass voltage to all data word lines
1010
Apply dummy pre-charge voltage to all dummy word lines
1012
Increase voltage to all unselected programmed word lines to overdrive voltage after the pre-charge voltages on the bit line and the source line stabilize
1014

Figure 10A

FIG. 10B

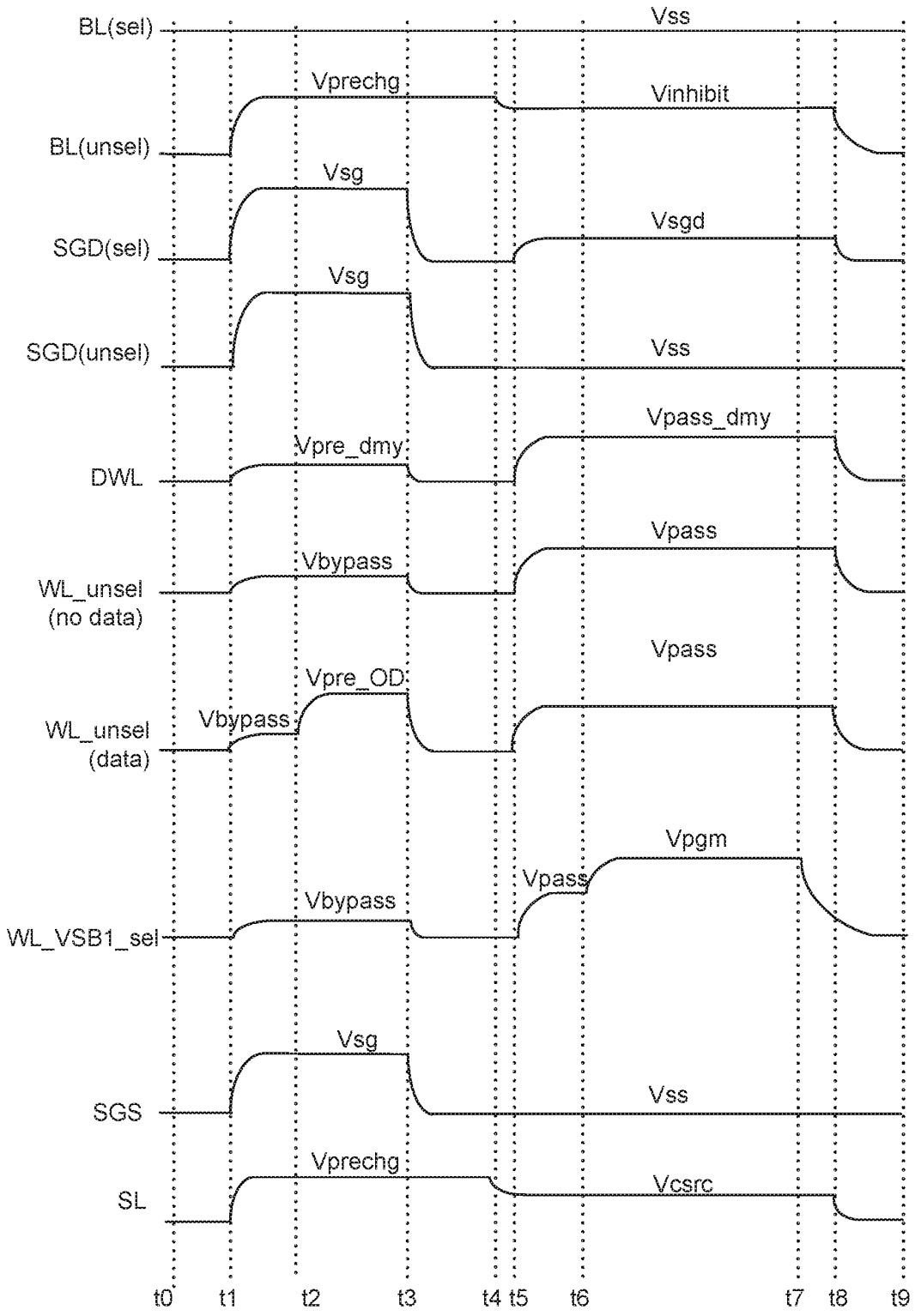
BL(sel)
Vss
Vprechg
Vinhibit
BL(unsel)
Vsg
Vsgd
SGD(sel)
Vsg
SGD(unsel)
Vss
Vpass_dmy
Vpre_dmy
DWL
Vpass
Vbypass
WL_unsel
(no data)
Vpass
Vpre_OD
Vbypass
WL_unsel
(data)
Vpgm
Vpass
Vbypass
WL_VSB1_sel
Vsg
Vss
SGS
Vprechg
Vcsrc
SL
t0
t1
t2
t3
t4
t5
t6
t7
t8
t9

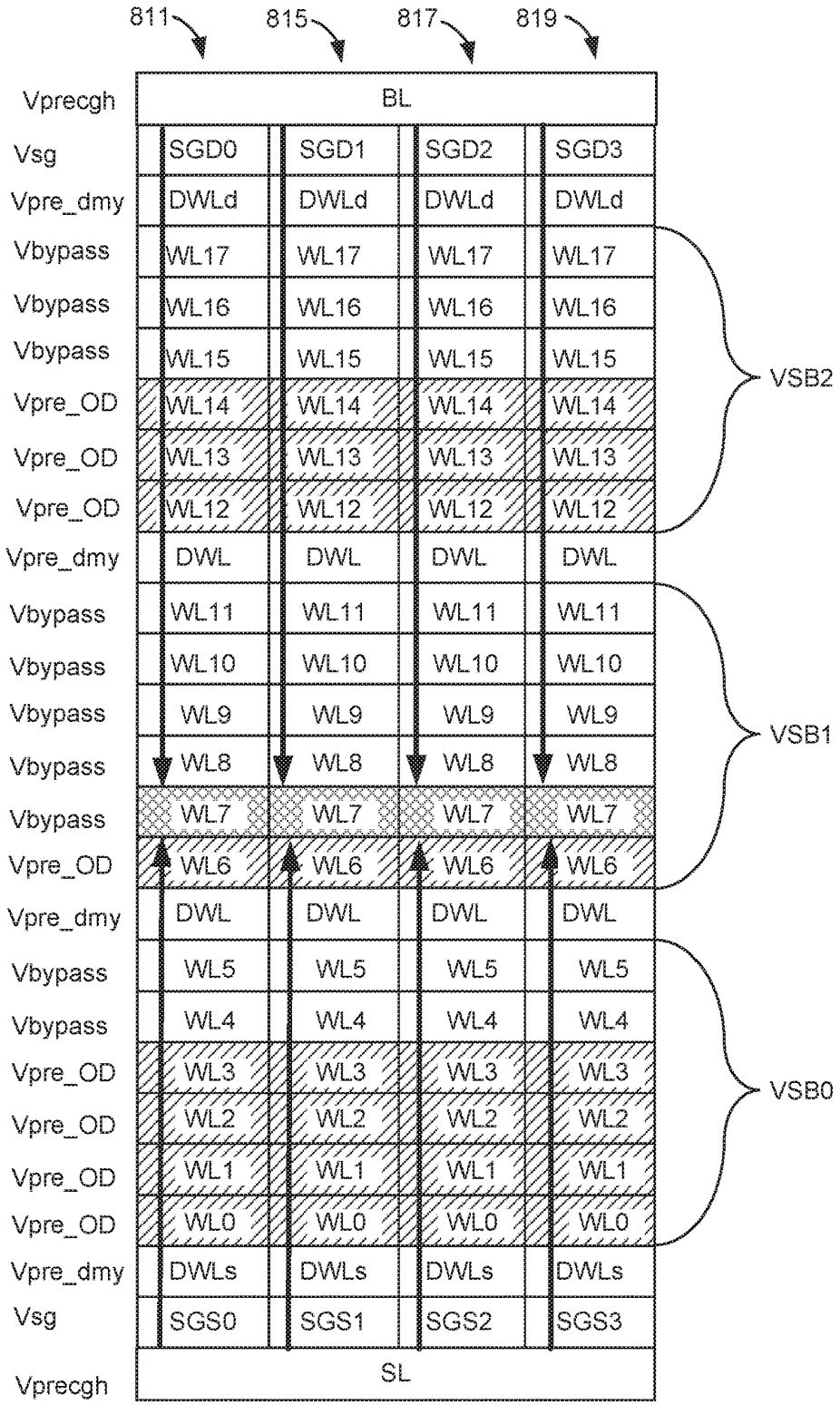
811
815
817
819
Vprecgh
BL
Vsg
SGD0
SGD1
SGD2
SGD3
Vpre_dmy
DWLd
Vbypass
WL17
WL16
WL15
Vpre_OD
WL14
WL13
WL12
VSB2
DWL
WL11
WL10
WL9
WL8
WL7
WL6
VSB1
WL5
WL4
WL3
WL2
WL1
WL0
VSB0
DWLs
Vsg
SGS0
SGS1
SGS2
SGS3
Vprecgh
SL

Figure 10C

PRE-CHARGE VOLTAGE FOR INHIBITING UNSELECTED NAND MEMORY CELL PROGRAMMING

BACKGROUND

[0001] Semiconductor memory is widely used in various electronic devices such as cellular telephones, digital cameras, personal digital assistants, medical electronics, mobile computing devices, servers, solid state drives, non-mobile computing devices and other devices. Semiconductor memory may comprise non-volatile memory or volatile memory. A non-volatile memory allows information to be stored and retained even when the non-volatile memory is not connected to a source of power (e.g., a battery).

[0002] One type of non-volatile memory has strings of non-volatile memory cells that have a select transistor at each end of the string. Typically, such strings are referred to as NAND strings. A NAND string may have a drain side select transistor at one end that connects the string to a bit line. A NAND string may have a source side select transistor at one end that connects the string to a source line. The non-volatile memory cells may also be referred to as non-volatile memory cell transistors, with the channels of the non-volatile memory cell transistors collectively being referred to as a NAND string channel.

BRIEF DESCRIPTION OF THE DRAWINGS

[0003] Like-numbered elements refer to common components in the different figures.

[0004] FIG. **1** is a functional block diagram of a memory device.

[0005] FIG. **2** is a block diagram depicting one embodiment of a memory system.

[0006] FIG. **3** is a perspective view of a portion of one embodiment of a monolithic three dimensional memory structure.

[0007] FIG. **4**A is a block diagram of a memory structure having two planes.

[0008] FIG. **4**B depicts a top view of a portion of a block of memory cells.

[0009] FIG. **4**C depicts an embodiment of a stack showing a cross-sectional view along line AA of FIG. **4**B.

[0010] FIG. **4**D depicts an alternative view of the select gate layers and word line layers of the stack **435** of FIG. **4**C.

[0011] FIG. **4**E depicts a view of the region **445** of FIG. **4**C.

[0012] FIG. **4**F is a schematic of a plurality of NAND strings showing multiple horizontal sub-blocks.

[0013] FIG. **4**G is a schematic of a plurality of NAND strings showing one horizontal sub-block.

[0014] FIG. **4**H is a schematic diagram of a NAND string.

[0015] FIG. **5** is a flowchart describing one embodiment of a process for programming.

[0016] FIG. **6** illustrates example threshold voltage distributions for the memory array when each memory cell stores three bits of data.

[0017] FIG. **7** is a flowchart of one embodiment of a process of inhibiting non-selected memory cells from programming during a programming operation.

[0018] FIG. **8**A is a flowchart of one embodiment of a process of a pre-charge phase of a program operation in which pre-charge is from a bit line.

[0019] FIG. **8**B shows timing of voltages during one embodiment of programming NAND having multiple vertical sub-blocks in which pre-charge is from a bit line.

[0020] FIG. **8**C is a block diagram to illustrate one embodiment of pre-charging the channels of unselected NAND strings from the bit line.

[0021] FIG. **9**A is a flowchart of one embodiment of a process of a pre-charge phase of a program operation in which pre-charge is from a source line.

[0022] FIG. **9**B shows timing of voltages during one embodiment of programming NAND having multiple vertical sub-blocks in which pre-charge is from a source line.

[0023] FIG. **9**C is a block diagram to illustrate one embodiment of pre-charging the channels of unselected NAND strings from a source line.

[0024] FIG. **10**A is a flowchart of one embodiment of a process of a pre-charge phase of a program operation in which pre-charge is from both a bit line and a source line.

[0025] FIG. **10**B shows timing of voltages during one embodiment of programming NAND having multiple vertical sub-blocks in which pre-charge is from both a bit line and a source line.

[0026] FIG. **10**C is a block diagram to illustrate one embodiment of pre-charging the channels of unselected NAND strings from both a bit line and a source line.

DETAILED DESCRIPTION

[0027] Techniques are provided for pre-charging NAND strings during a programming operation. A NAND string comprises a number of memory cells connected in series between one or more drain-side select transistors (or SGD transistors), on a drain-end of the NAND string which is connected to a bit line, and one or more source-source select transistors (or SGS transistors), on a source-end of the NAND string which is connected to a source line. A NAND string may have a number of data memory cells and may have dummy memory cells. A data memory cell is used to store user or system data. A dummy memory cell is not used to store user or system data.

[0028] During a programming operation involving a group of NAND strings, some memory cells are to receive programming (e.g., "selected memory cells"), whereas other memory cells are not to be subjected to programming (e.g., "unselected memory cells"). Program disturb is the unintended programming of an unselected memory cell while performing a programming process for selected memory cells.

[0029] A programming operation has a channel pre-charge phase followed by a programming phase in which a programming voltage is applied to a selected word line and boosting voltages are applied to unselected word lines, in one embodiment. A "selected word line" in the context of a programming operation, is a word line that is connected to at least one memory cell (e.g., selected memory cell) that is to receive programming. An "unselected word line" in the context of a programming operation, is a word line that is not connected to any memory cells that are to receive programming. Note that the selected word line may be connected to both selected memory cells and unselected memory cells.

[0030] The boosting voltages boost the voltage of the channel of a NAND string (e.g., "unselected NAND string") that does not have a memory cell that is selected for programming to prevent or at least reduce program disturb of one or more memory cells coupled to the unselected

NAND string. If the channel of the unselected NAND string is not adequately pre-charged during the pre-charge phase, the NAND channel may fail to boost to a sufficient voltage during the programming phase to adequately prevent program disturb. For example, the unselected NAND string may have an unselected memory cell that is connected to a selected word line. If the channel of this unselected memory cell is not adequately pre-charged during the pre-charge phase, the channel of this unselected memory cell may fail to boost to a sufficient voltage during the programming phase to adequately prevent program disturb of this unselected memory.

[0031] The NAND strings are in a block that is divided into vertical sub-blocks, in one embodiment. The NAND strings run vertically through a stack of alternating horizontal conductive layers and horizontal dielectric layers, in one embodiment. The stack comprises tiers (also referred to as vertical sub-blocks), in one embodiment. Thus, each NAND string in the block resides in multiple vertical sub-blocks, in one embodiment. In one embodiment, there are at least three vertical sub-blocks. For the sake of discussion these will be referred to as a lower, middle, and upper vertical sub-blocks.

[0032] The different vertical sub-blocks can be treated as separate units for erase/program purposes, in one embodiment. For example, the memory cells in one vertical sub-block can be erased while leaving valid data in the other vertical sub-blocks. Then, memory cells in the erased vertical sub-block can be programmed while valid data remains in the other vertical sub-blocks. In some cases, memory cells in the middle vertical sub-block are programmed while there is valid data in the lower and/or the upper vertical sub-block. Programming the memory cells in middle vertical sub-block presents challenges due to the valid data in the other vertical sub-blocks. One challenge is to be able to prevent program disturb in an unselected memory cell in the middle vertical sub-block that is connected to a selected word line.

[0033] In one embodiment, during a pre-charge phase of a programming operation, an overdrive voltage is applied to some memory cells and a bypass voltage is applied to other memory cells. An overdrive voltage is defined herein as a voltage having a magnitude such that when applied to a control gate of a memory cell during a pre-charge phase of a programming operation, the memory cell will operate as a pass gate (e.g., conduct a current) whether the memory cell is in a programmed state or an erased state. The overdrive voltage allows the channel of an unselected NAND string to adequately charge during the pre-charge phase, such that program disturb is prevented, or at least reduced. A bypass voltage is defined herein as a voltage having a magnitude such that when applied to a control gate of a memory cell during a pre-charge phase of a programming operation, the memory cell will operate as a pass gate if the memory cell is in an erased state, but will not act as a pass gate for at least one programmed state. The technique allows, for example, programming of memory cells in a middle vertical sub-block without causing program disturb of unselected memory cells that are not to receive programming. In general, there may be two or more vertical sub-blocks. In one embodiment, there are two vertical sub-blocks. In one embodiment, there are more than three vertical sub-blocks.

[0034] FIG. **1**-FIG. **4**H describe one example of a memory system that can be used to implement the technology proposed herein. FIG. **1** is a functional block diagram of an example memory system **100**. The components depicted in FIG. **1** are electrical circuits. Memory system **100** includes one or more memory dies **108**. The one or more memory dies **108** can be complete memory dies or partial memory dies. In one embodiment, each memory die **108** includes a memory structure **126**, control circuitry **110**, and read/write circuits **128**. Memory structure **126** is addressable by word lines via a row decoder **124** and by bit lines via a column decoder **132**. The read/write/erase circuits **128** include multiple sense blocks **150** including SB**1**, SB**2**, . . . , SBp (sensing circuitry) and allow a page of memory cells to be read or programmed in parallel. Also, many strings of memory cells can be erased in parallel.

[0035] In some systems, a controller **122** is included in the same package (e.g., a removable storage card) as the one or more memory die **108**. However, in other systems, the controller can be separated from the memory die **108**. In some embodiments the controller will be on a different die than the memory die **108**. In some embodiments, one controller **122** will communicate with multiple memory die **108**. In other embodiments, each memory die **108** has its own controller. Commands and data are transferred between a host **140** and controller **122** via a data bus **120**, and between controller **122** and the one or more memory die **108** via lines **118**. In one embodiment, memory die **108** includes a set of input and/or output (I/O) pins that connect to lines **118**.

[0036] Control circuitry **110** cooperates with the read/write circuits **128** to perform memory operations (e.g., write, read, erase and others) on memory structure **126**, and includes state machine **112**, an on-chip address decoder **114**, and a power control circuit **116**. In one embodiment, control circuitry **110** includes buffers such as registers, ROM fuses and other storage devices for storing default values such as base voltages and other parameters.

[0037] The on-chip address decoder **114** provides an address interface between addresses used by host **140** or controller **122** to the hardware address used by the decoders **124** and **132**. Power control circuit **116** controls the power and voltages supplied to the word lines, bit lines, and select lines during memory operations. The power control circuit **116** includes voltage circuitry, in one embodiment. Power control circuit **116** may include charge pumps for creating voltages. The sense blocks include bit line drivers. The power control circuit **116** executes under control of the state machine **112**, in one embodiment.

[0038] State machine **112** and/or controller **122** (or equivalently functioned circuits), in combination with all or a subset of the other circuits depicted in FIG. **1**, can be considered a control circuit that performs the functions described herein. The control circuit can include hardware only or a combination of hardware and software (including firmware). For example, a controller programmed by firmware to perform the functions described herein is one example of a control circuit. A control circuit can include a processor, PGA (Programmable Gate Array, FPGA (Field Programmable Gate Array), ASIC (Application Specific Integrated Circuit), integrated circuit or other type of circuit.

[0039] The (on-chip or off-chip) controller **122** (which in one embodiment is an electrical circuit) may comprise one or more processors **122***c*, ROM **122***a*, RAM **122***b*, a memory interface (MI) **122***d* and a host interface (HI) **122***e*, all of which are interconnected. The storage devices (ROM **122***a*, RAM **122***b*) store code (software) such as a set of instructions (including firmware), and one or more processors **122***c*

is/are operable to execute the set of instructions to provide the functionality described herein. Alternatively or additionally, one or more processors **122***c* can access code from a storage device in the memory structure, such as a reserved area of memory cells connected to one or more word lines. RAM **122***b* can be to store data for controller **122**, including caching program data (discussed below). Memory interface **122***d*, in communication with ROM **122***a*, RAM **122***b* and processor **122***c*, is an electrical circuit that provides an electrical interface between controller **122** and one or more memory die **108**. For example, memory interface **122***d* can change the format or timing of signals, provide a buffer, isolate from surges, latch I/O, etc. One or more processors **122***c* can issue commands to control circuitry **110** (or another component of memory die **108**) via Memory Interface **122***d*. Host interface **122***e* provides an electrical interface with host **140** data bus **120** in order to receive commands, addresses and/or data from host **140** to provide data and/or status to host **140**.

[0040] In one embodiment, memory structure **126** comprises a three-dimensional memory array of non-volatile memory cells in which multiple memory levels are formed above a single substrate, such as a wafer. The memory structure may comprise any type of non-volatile memory that are monolithically formed in one or more physical levels of arrays of memory cells having an active area disposed above a silicon (or other type of) substrate. In one example, the non-volatile memory cells comprise vertical NAND strings with charge-trapping material.

[0041] In another embodiment, memory structure **126** comprises a two-dimensional memory array of non-volatile memory cells. In one example, the non-volatile memory cells are NAND flash memory cells utilizing floating gates. Other types of memory cells (e.g., NOR-type flash memory) can also be used.

[0042] The exact type of memory array architecture or memory cell included in memory structure **126** is not limited to the examples above. Many different types of memory array architectures or memory technologies can be used to form memory structure **126**. No particular non-volatile memory technology is required for purposes of the new claimed embodiments proposed herein. Other examples of suitable technologies for memory cells of the memory structure **126** include ReRAM memories, magnetoresistive memory (e.g., MRAM, Spin Transfer Torque MRAM, Spin Orbit Torque MRAM), phase change memory (e.g., PCM), and the like. Examples of suitable technologies for memory cell architectures of the memory structure **126** include two-dimensional arrays, three-dimensional arrays, cross-point arrays, stacked two-dimensional arrays, vertical bit line arrays, and the like.

[0043] One example of a ReRAM, or PCMRAM, cross point memory includes reversible resistance-switching elements arranged in cross point arrays accessed by X lines and Y lines (e.g., word lines and bit lines). In another embodiment, the memory cells may include conductive bridge memory elements. A conductive bridge memory element may also be referred to as a programmable metallization cell. A conductive bridge memory element may be used as a state change element based on the physical relocation of ions within a solid electrolyte. In some cases, a conductive bridge memory element may include two solid metal electrodes, one relatively inert (e.g., tungsten) and the other electrochemically active (e.g., silver or copper), with a thin film of the solid electrolyte between the two electrodes. As temperature increases, the mobility of the ions also increases causing the programming threshold for the conductive bridge memory cell to decrease. Thus, the conductive bridge memory element may have a wide range of programming thresholds over temperature.

[0044] Magnetoresistive memory (MRAM) stores data by magnetic storage elements. The elements are formed from two ferromagnetic plates, each of which can hold a magnetization, separated by a thin insulating layer. One of the two plates is a permanent magnet set to a particular polarity; the other plate's magnetization can be changed to match that of an external field to store memory. A memory device is built from a grid of such memory cells. In one embodiment for programming, each memory cell lies between a pair of write lines arranged at right angles to each other, parallel to the cell, one above and one below the cell. When current is passed through them, an induced magnetic field is created.

[0045] Phase change memory (PCM) exploits the unique behavior of chalcogenide glass. One embodiment uses a GeTe—Sb2Te3 super lattice to achieve non-thermal phase changes by simply changing the co-ordination state of the Germanium atoms with a laser pulse (or light pulse from another source). Therefore, the doses of programming are laser pulses. The memory cells can be inhibited by blocking the memory cells from receiving the light. Note that the use of "pulse" in this document does not require a square pulse, but includes a (continuous or non-continuous) vibration or burst of sound, current, voltage light, or other wave.

[0046] A person of ordinary skill in the art will recognize that the technology described herein is not limited to a single specific memory structure, but covers many relevant memory structures within the spirit and scope of the technology as described herein and as understood by one of ordinary skill in the art.

[0047] FIG. **2** is a block diagram of example memory system **100**, depicting more details of one embodiment of controller **122**. The controller in FIG. **2** is a flash memory controller, but note that the non-volatile memory **108** is not limited to flash. Thus, the controller **122** is not limited to the example of a flash memory controller. As used herein, a flash memory controller is a device that manages data stored on flash memory and communicates with a host, such as a computer or electronic device. A flash memory controller can have various functionality in addition to the specific functionality described herein. For example, the flash memory controller can format the flash memory to ensure the memory is operating properly, map out bad flash memory cells, and allocate spare memory cells to be substituted for future failed cells. Some part of the spare cells can be used to hold firmware to operate the flash memory controller and implement other features. In operation, when a host needs to read data from or write data to the flash memory, it will communicate with the flash memory controller. If the host provides a logical address to which data is to be read/written, the flash memory controller can convert the logical address received from the host to a physical address in the flash memory. (Alternatively, the host can provide the physical address). The flash memory controller can also perform various memory management functions, such as, but not limited to, wear leveling (distributing writes to avoid wearing out specific blocks of memory that would otherwise be repeatedly written to) and garbage collection

(after a block is full, moving only the valid pages of data to a new block, so the full block can be erased and reused).

[0048] The interface between controller **122** and non-volatile memory die **108** may be any suitable flash interface, such as Toggle Mode **200**, **400**, or **800**. In one embodiment, memory system **100** may be a card-based system, such as a secure digital (SD) or a micro secure digital (micro-SD) card. In an alternate embodiment, memory system **100** may be part of an embedded memory system. For example, the flash memory may be embedded within the host. In other example, memory system **100** can be in the form of a solid state drive (SSD).

[0049] In some embodiments, non-volatile memory system **100** includes a single channel between controller **122** and non-volatile memory die **108**, the subject matter described herein is not limited to having a single memory channel. For example, in some memory system architectures, 2, 4, 8 or more channels may exist between the controller and the memory die, depending on controller capabilities. In any of the embodiments described herein, more than a single channel may exist between the controller and the memory die, even if a single channel is shown in the drawings.

[0050] As depicted in FIG. **2**, controller **122** includes a front end module **208** that interfaces with a host, a back end module **210** that interfaces with the one or more non-volatile memory die **108**, and various other modules that perform functions which will now be described in detail.

[0051] The components of controller **122** depicted in FIG. **2** may take the form of a packaged functional hardware unit (e.g., an electrical circuit) designed for use with other components, a portion of a program code (e.g., software or firmware) executable by a (micro) processor or processing circuitry that usually performs a particular function of related functions, or a self-contained hardware or software component that interfaces with a larger system, for example. For example, each module may include an application specific integrated circuit (ASIC), a Field Programmable Gate Array (FPGA), a circuit, a digital logic circuit, an analog circuit, a combination of discrete circuits, gates, or any other type of hardware or combination thereof. Alternatively or in addition, each module may include software stored in a processor readable device (e.g., memory) to program a processor for controller **122** to perform the functions described herein. The architecture depicted in FIG. **2** is one example implementation that may (or may not) use the components of controller **122** depicted in FIG. **1** (i.e. RAM, ROM, processor, interface).

[0052] Referring again to modules of the controller **122**, a buffer manager/bus control **214** manages buffers in random access memory (RAM) **216** and controls the internal bus arbitration of controller **122**. A read only memory (ROM) **218** stores system boot code. Although illustrated in FIG. **2** as located separately from the controller **122**, in other embodiments one or both of the RAM **216** and ROM **218** may be located within the controller. In yet other embodiments, portions of RAM and ROM may be located both within the controller **122** and outside the controller. Further, in some implementations, the controller **122**, RAM **216**, and ROM **218** may be located on separate semiconductor die.

[0053] Front end module **208** includes a host interface **220** and a physical layer interface (PHY) **222** that provide the electrical interface with the host or next level storage controller. The choice of the type of host interface **220** can depend on the type of memory being used. Examples of host interfaces **220** include, but are not limited to, SATA, SATA Express, SAS, Fibre Channel, USB, PCIe, and NVMe. The host interface **220** typically facilitates transfer for data, control signals, and timing signals.

[0054] Back end module **210** includes an error correction code (ECC) engine **224** that encodes the data bytes received from the host, and decodes and error corrects the data bytes read from the non-volatile memory. A command sequencer **226** generates command sequences, such as program and erase command sequences, to be transmitted to non-volatile memory die **108**. A RAID (Redundant Array of Independent Dies) module **228** manages generation of RAID parity and recovery of failed data. The RAID parity may be used as an additional level of integrity protection for the data being written into the non-volatile memory system **100**. In some cases, the RAID module **228** may be a part of the ECC engine **224**. Note that the RAID parity may be added as an extra die or dies as implied by the common name, but it may also be added within the existing die, e.g. as an extra plane, or extra block, or extra WLs within a block. A memory interface **230** provides the command sequences to non-volatile memory die **108** and receives status information from non-volatile memory die **108**. In one embodiment, memory interface **230** may be a double data rate (DDR) interface, such as a Toggle Mode **200**, **400**, or **800** interface. A flash control layer **232** controls the overall operation of back end module **210**.

[0055] Additional components of system **100** illustrated in FIG. **2** include media management layer **238**, which performs wear leveling of memory cells of non-volatile memory die **108**. System **100** also includes other discrete components **240**, such as external electrical interfaces, external RAM, resistors, capacitors, or other components that may interface with controller **122**. In alternative embodiments, one or more of the physical layer interface **222**, RAID module **228**, media management layer **238** and buffer management/bus controller **214** are optional components that are not necessary in the controller **122**.

[0056] The Flash Translation Layer (FTL) or Media Management Layer (MML) **238** may be integrated as part of the flash management that may handle flash errors and interfacing with the host. In particular, MML may be a module in flash management and may be responsible for the internals of NAND management. In particular, the MML **238** may include an algorithm in the memory device firmware which translates writes from the host into writes to the memory **126** of die **108**. The MML **238** may be needed because: 1) the memory may have limited endurance; 2) the memory **126** may only be written in multiples of pages; and/or 3) the memory **126** may not be written unless it is erased as a block (or a tier within a block in some embodiments). The MML **238** understands these potential limitations of the memory **126** which may not be visible to the host. Accordingly, the MML **238** attempts to translate the writes from host into writes into the memory **126**.

[0057] Controller **122** may interface with one or more memory dies **108**. In one embodiment, controller **122** and multiple memory dies (together comprising non-volatile storage system **100**) implement a solid state drive (SSD), which can emulate, replace or be used instead of a hard disk drive inside a host, as a NAS device, in a laptop, in a tablet, in a server, etc. Additionally, the SSD need not be made to work as a hard drive.

[0058] Some embodiments of a non-volatile storage system will include one memory die **108** connected to one controller **122**. However, other embodiments may include multiple memory die **108** in communication with one or more controllers **122**. In one example, the multiple memory die can be grouped into a set of memory packages. Each memory package includes one or more memory die in communication with controller **122**. In one embodiment, a memory package includes a printed circuit board (or similar structure) with one or more memory die mounted thereon. In some embodiments, a memory package can include molding material to encase the memory dies of the memory package. In some embodiments, controller **122** is physically separate from any of the memory packages.

[0059] FIG. **3** is a perspective view of a portion of one example embodiment of a monolithic three dimensional memory array that can comprise memory structure **126**, which includes a plurality non-volatile memory cells. For example, FIG. **3** shows a portion of one block of memory. The structure depicted includes a set of bit lines BL positioned above a stack of alternating dielectric layers and conductive layers. For example purposes, one of the dielectric layers is marked as D and one of the conductive layers (also called word line layers) is marked as W. The number of alternating dielectric layers and conductive layers can vary based on specific implementation requirements. One set of embodiments includes between 108-300 alternating dielectric layers and conductive layers. One example embodiment includes 96 data word line layers, 8 select layers, 6 dummy word line layers and 110 dielectric layers. More or less than 108-300 layers can also be used. Data word line layers have data memory cells. Dummy word line layers have dummy memory cells. As will be explained below, the alternating dielectric layers and conductive layers are divided into four "fingers" by local interconnects LI. FIG. **3** shows two fingers and two local interconnects LI. Below the alternating dielectric layers and word line layers is a source line layer SL. Memory holes are formed in the stack of alternating dielectric layers and conductive layers. For example, one of the memory holes is marked as MH. Note that in FIG. **3**, the dielectric layers are depicted as see-through so that the reader can see the memory holes positioned in the stack of alternating dielectric layers and conductive layers. In one embodiment, NAND strings are formed by filling the memory hole with materials including a charge-trapping material to create a vertical column of memory cells. Each memory cell can store one or more bits of data. More details of the three dimensional monolithic memory array that comprises memory structure **126** is provided below with respect to FIG. **4**A-**4**H.

[0060] One of the local interconnects LI separates the block into two horizontal sub-blocks HSB**0**, HSB**1**. The block comprises multiple vertical sub-blocks VSB**0**, VSB**1**, VSB**2**. The vertical sub-blocks VSB**0**, VSB**1**, VSB**2** can also be referred to as "tiers." Each vertical sub-block extends across the block, in one embodiment. Each horizontal sub-block HSB**0**, HSB**1** in the block is a part of vertical sub-block VSB**0**. Likewise, each horizontal sub-block HSB**0**, HSB**1** in the block is a part of vertical sub-block VSB**1**. Likewise, each horizontal sub-block HSB**0**, HSB**1** in the block is a part of vertical sub-block VSB**2**. For purpose of discussion, vertical sub-block VSB**0** will be referred to as a lower vertical sub-block, vertical sub-block VSB**1** will be referred to as a middle vertical sub-block, and VSB**2** will be referred to as an upper vertical sub-block. In one embodiment, there are two vertical sub-blocks in a block. There could be four or more vertical sub-blocks in a block.

[0061] A memory operation for a vertical sub-block may be performed on memory cells in one or more horizontal sub-blocks. For example, a programming operation of memory cells in vertical sub-block VSB**0** may include: programming memory cells in horizontal sub-block HSB**0** but not horizontal sub-block HSB**1**; programming memory cells in horizontal sub-block HSB**1** but not horizontal sub-block HSB**0**; or programming memory cells in both horizontal sub-block HSB**0** and horizontal sub-block HSB**1**.

[0062] The different vertical sub-blocks VSB**0**, VSB**1**, VSB**2** are treated as separate units for erase/program purposes, in one embodiment. For example, the memory cells in one vertical sub-block can be erased while leaving valid data in the other vertical sub-blocks. Then, memory cells in the erased vertical sub-block can be programmed while valid data remains in the other vertical sub-blocks. In some cases, memory cells in the middle vertical sub-block VSB**1** are programmed while there is valid data in the lower vertical sub-block VSB**0** and/or the upper vertical sub-block VSB**2**. Programming the memory cells in middle vertical sub-block VSB**1** presents challenges due to the valid data in the other vertical sub-blocks VSB**0**, VSB**2**. One challenge is to be able to prevent program disturb in a memory cell in the middle vertical sub-block VSB**1** that is connected to a selected word line, but that is not to receive programming.

[0063] In one embodiment, during a pre-charge phase of a programming operation of a selected memory cell in vertical sub-block VSB**1**, an overdrive voltage is applied to programmed memory cells in vertical sub-block VSB**2**, while applying a bypass voltage to one or more unprogrammed memory cells of vertical sub-block VSB**1**, and while applying a pre-charge voltage to a bit line (BL) connected to an unselected NAND string. The foregoing allows the channel of the unselected NAND string to adequately charge. During a programming phase, boosting voltages may be applied to word lines to boost the channel voltage of the unselected NAND string to thereby prevent program disturb of an unselected memory cell on the unselected NAND string when a program voltage is applied to a selected word line. The foregoing allows memory cells in the middle vertical sub-block VSB**1** to be programmed while valid data exists in the upper vertical sub-block VSB**2**. The foregoing allows memory cells in the middle vertical sub-block VSB**1** to be programmed even if valid data exists in the both the lower vertical sub-block VSB**0** and the upper vertical sub-block VSB**2**.

[0064] In one embodiment, during a pre-charge phase of a programming operation of a selected memory cell in vertical sub-block VSB**1**, an overdrive voltage is applied to programmed memory cells in vertical sub-block VSB**0**, while applying a bypass voltage to one or more unprogrammed memory cells of vertical sub-block VSB**1**, and while applying a pre-charge voltage to a source line (SL) connected to an unselected NAND string. The foregoing allows the channel of the unselected NAND string to adequately charge. During a programming phase, boosting voltages may be applied to word lines to boost the channel voltage of the unselected NAND string to thereby prevent program disturb of an unselected memory cell on the unselected NAND string when a program voltage is applied to a selected word line. The foregoing allows memory cells in

the middle vertical sub-block VSB**1** to be programmed while valid data exists in the lower vertical sub-block VSB**0**. The foregoing allows memory cells in the middle vertical sub-block VSB**1** to be programmed even if valid data exists in the both the lower vertical sub-block VSB**0** and the upper vertical sub-block VSB**2**.

[0065] In one embodiment, the channel of the unselected NAND string is pre-charged from both the bit line and the source line. The foregoing allows the channel of the unselected NAND string to adequately charge. The foregoing allows memory cells in the middle vertical sub-block VSB**1** to be programmed even if valid data exists in the both the lower vertical sub-block VSB**0** and the upper vertical sub-block VSB**2**.

[0066] FIG. **4**A is a block diagram explaining one example organization of memory structure **126**, which is divided into two planes **302** and **304**. Each plane is then divided into M blocks. In one example, each plane has about 2000 blocks. However, different numbers of blocks and planes can also be used. In on embodiment, a block of memory cells is a unit of erase. That is, all memory cells of a block are erased together. In other embodiments, memory cells can be grouped into blocks for other reasons, such as to organize the memory structure **126** to enable the signaling and selection circuits. In some embodiments, a block represents a groups of connected memory cells as the memory cells of a block share a common set of word lines.

[0067] FIGS. **4**B-**4**F depict an example three dimensional ("3D") NAND structure that corresponds to the structure of FIG. **3** and can be used to implement memory structure **126** of FIG. **2**. FIG. **4**B is a block diagram depicting a top view of a portion of one block from memory structure **126**. The portion of the block depicted in FIG. **4**B corresponds to portion **306** in block **2** of FIG. **4**A. As can be seen from FIG. **4**B, the block depicted in FIG. **4**B extends in the direction of **332**. In one embodiment, the memory array has many layers; however, FIG. **4**B only shows the top layer.

[0068] FIG. **4**B depicts a plurality of circles that represent the vertical columns. Each of the vertical columns include multiple select transistors (also referred to as a select gate or selection gate) and multiple memory cells. In one embodiment, each vertical column implements a NAND string. For example, FIG. **4**B depicts vertical columns **422**, **432**, **442** and **452**. Vertical column **422** implements NAND string **482**. Vertical column **432** implements NAND string **484**. Vertical column **442** implements NAND string **486**. Vertical column **452** implements NAND string **488**. More details of the vertical columns are provided below. Since the block depicted in FIG. **4**B extends in the direction of arrow **332**, the block includes more vertical columns than depicted in FIG. **4**B.

[0069] FIG. **4**B also depicts a set of bit lines **415**, including bit lines **411**, **412**, **413**, **414**, . . . **419**. FIG. **4**B shows twenty-four bit lines because only a portion of the block is depicted. It is contemplated that more than twenty-four bit lines connected to vertical columns of the block. Each of the circles representing vertical columns has an "x" to indicate its connection to one bit line. For example, bit line **414** is connected to vertical columns **422**, **432**, **442** and **452**.

[0070] The block depicted in FIG. **4**B includes a set of local interconnects **402**, **404**, **406**, **408** and **410** that connect the various layers to a source line below the vertical columns. Local interconnects **402**, **404**, **406**, **408** and **410** also serve to divide each layer of the block into four regions; for example, the top layer depicted in FIG. **4**B is divided into regions **420**, **430**, **440** and **450**, which are referred to as fingers. In the layers of the block that implement memory cells, the four regions are referred to as word line fingers that are separated by the local interconnects. In one embodiment, the word line fingers on a common level of a block connect together to form a single word line. In another embodiment, the word line fingers on the same level are not connected together. In one example implementation, a bit line only connects to one vertical column in each of regions **420**, **430**, **440** and **450**. In that implementation, each block has sixteen rows of active columns and each bit line connects to four rows in each block. In one embodiment, all of four rows connected to a common bit line are connected to the same word line (via different word line fingers on the same level that are connected together); therefore, the system uses the source side selection lines and the drain side selection lines to choose one (or another subset) of the four to be subjected to a memory operation (program, verify, read, and/or erase).

[0071] Although FIG. **4**B shows each region having four rows of vertical columns, four regions and sixteen rows of vertical columns in a block, those exact numbers are an example implementation. Other embodiments may include more or less regions per block, more or less rows of vertical columns per region and more or less rows of vertical columns per block.

[0072] FIG. **4**B also shows the vertical columns being staggered. In other embodiments, different patterns of staggering can be used. In some embodiments, the vertical columns are not staggered.

[0073] FIG. **4**C depicts an embodiment of a stack **435** showing a cross-sectional view along line AA of FIG. **4**B. Two SGD layers (SGD**0**, SDG**1**), two SGS layers (SGS**0**, SGS**1**) and six dummy word line layers DWLD**0**, DWLD**1**, DWLM**1**, DWLM**0**, DWLS**0** and DWLS**1** are provided, in addition to the data word line layers WLL**0**-WLL**95**. Each NAND string has a drain side select transistor at the SGD**0** layer and a drain side select transistor at the SGD**1** layer. In operation, the same voltage may be applied to each layer (SGD**0**, SGD**1**), such that the control terminal of each transistor receives the same voltage. Each NAND string has a source side select transistor at the SGS**0** layer and a drain side select transistor at the SGS**1** layer. In operation, the same voltage may be applied to each layer (SGS**0**, SGS**1**), such that the control terminal of each transistor receives the same voltage. Also depicted are dielectric layers DL**0**-DL**106**.

[0074] Columns **432**, **434** of memory cells are depicted in the multi-layer stack. The stack includes a substrate **301**, an insulating film **250** on the substrate, and a portion of a source line SL. A portion of the bit line **414** is also depicted. Note that NAND string **484** is connected to the bit line **414**. NAND string **484** has a source-end **439** at a bottom of the stack and a drain-end **438** at a top of the stack. The source-end **439** is connected to the source line SL. A conductive via **441** connects the drain-end **438** of NAND string **484** to the bit line **414**. The metal-filled slits **404** and **406** from FIG. **4**B are also depicted.

[0075] The stack **435** is divided into three vertical sub-blocks (VSB**0**, VSB**1**, VSB**2**). Vertical sub-block VSB**0** includes WLL**0**-WLL**31**. The following layers could also be considered to be a part of vertical sub-block VSB**0** (SGS**0**, SGS**1**, DWLS**0**, DWLS**1**). Vertical sub-block VSB**1** includes WLL**32**-WLL**63**. Vertical sub-block VSB**2**

includes WLL**64**-WLL**95**. The following layers could also be considered to be a part of vertical sub-block VSB**2** (SGD**0**, SGD**1**, DWLD**0**, DWLD**1**). Each NAND string has a set of data memory cells in each of the vertical sub-blocks. Dummy word line layer DMLM**0** is between vertical sub-block VSB**0** and vertical sub-block VSB**1**. Dummy word line layer DMLM**1** is between vertical sub-block VSB**1** and vertical sub-block VSB**2**. The dummy word line layers have dummy memory cell transistors that may be used to electrically isolate a first set of memory cell transistors within the memory string (e.g., corresponding with vertical sub-block VSB**0** word lines WLL**0**-WLL**31**) from a second set of memory cell transistors within the memory string (e.g., corresponding with the vertical sub-block VSB**1** word lines WLL**32**-WLL**63**) during a memory operation (e.g., an erase operation or a programming operation).

[0076] In another embodiment, one or more middle junction transistor layers are used to divide the stack **435** into vertical sub-blocks. A middle junction transistor layer contains junction transistors, which do not necessarily contain a charge storage region. Hence, a junction transistor is typically not considered to be a dummy memory cell. Both a junction transistor and a dummy memory cell may be referred to herein as a "non-data transistor." A non-data transistor, as the term is used herein, is a transistor on a NAND string, wherein the transistor is either configured to not store user or system data or operated in such a way that the transistor is not used to store user data or system data. A word line that is connected to non-data transistors is referred to herein as a non-data word line. Examples of non-data word lines include, but are not limited to, dummy word lines, and a select line in a middle junction transistor layer.

[0077] The stack **435** may have more than three vertical sub-blocks. For example, the stack **435** may be divided into four, five or more vertical sub-blocks. Each of the vertical sub-block contains at least one data memory cell. There may additional layers similar to the middle dummy word line layers DWLM in order to divide the stack **435** into the additional vertical sub-blocks. In one embodiment, the stack has two vertical sub-blocks.

[0078] FIG. **4**D depicts an alternative view of the SG layers and word line layers of the stack **435** of FIG. **4**C. The SGD layers SGD**0** and SGD**0** (the drain-side SG layers) each includes parallel rows of SG lines associated with the drain-side of a set of NAND strings. For example, SGD**0** includes drain-side SG regions **420**, **430**, **440** and **450**, consistent with FIG. **4**B.

[0079] Below the SGD layers are the drain-side dummy word line layers. Each dummy word line layer represents a word line, in one approach, and is connected to a set of dummy memory cells at a given height in the stack. For example, DWLD**0** comprises word line layer regions **451**, **453**, **455** and **457**. A dummy memory cell, also referred to as a non-data memory cell, does not store data and is ineligible to store data, while a data memory cell is eligible to store data. Moreover, the Vth of a dummy memory cell is generally fixed at the time of manufacturer or may be periodically adjusted, while the Vth of the data memory cells changes more frequently, e.g., during erase and programming operations of the data memory cells.

[0080] Below the dummy word line layers are the data word line layers. For example, WLL**95** comprises word line layer regions **471**, **472**, **473** and **474**.

[0081] Below the data word line layers are the source-side dummy word line layers.

[0082] Below the source-side dummy word line layers are the SGS layers. The SGS layers SGS**0** and SGS**1** (the source-side SG layers) each includes parallel rows of SG lines associated with the source-side of a set of NAND strings. For example, SGS**0** includes source-side SG lines **475**, **476**, **477** and **478**. Each SG line can be independently controlled, in one approach. Or, the SG lines can be connected and commonly controlled.

[0083] FIG. **4**E depicts a view of the region **445** of FIG. **4**C. Data memory cell transistors **520** and **521** are above dummy memory cell transistor **522**. Below dummy memory cell transistor **522** are \data memory cell transistors **523** and **524**. A number of layers can be deposited along the sidewall (SW) of the memory hole **444** and/or within each word line layer, e.g., using atomic layer deposition. For example, each column (e.g., the pillar which is formed by the materials within a memory hole) can include a blocking oxide/block high-k material **470**, charge-trapping layer or film **463** such as SiN or other nitride, a tunneling layer **464**, a polysilicon body or channel **465**, and a dielectric core **466**. A word line layer can include a conductive metal **462** such as Tungsten as a control gate. For example, control gates **490**, **491**, **492**, **493** and **494** are provided. In this example, all of the layers except the metal are provided in the memory hole. In other approaches, some of the layers can be in the control gate layer. Additional pillars are similarly formed in the different memory holes. A pillar can form a columnar active area (AA) of a NAND string.

[0084] When a data memory cell transistor is programmed, electrons are stored in a portion of the charge-trapping layer which is associated with the data memory cell transistor. These electrons are drawn into the charge-trapping layer from the channel, and through the tunneling layer. The Vth of a data memory cell transistor is increased in proportion to the amount of stored charge. During an erase operation, the electrons return to the channel.

[0085] Non-data transistors (e.g., select transistors, dummy memory cell transistors) may also include the charge trapping layer **463**. In FIG. **4**E, dummy memory cell transistor **522** includes the charge trapping layer **463**. Thus, the threshold voltage of at least some non-data transistors may also be adjusted by storing or removing electrons from the charge trapping layer **463**. It is not required that all non-data transistors have an adjustable Vth. For example, the charge trapping layer **463** is not required to be present in every select transistor.

[0086] Each of the memory holes can be filled with a plurality of annular layers comprising a blocking oxide layer, a charge trapping layer, a tunneling layer and a channel layer. A core region of each of the memory holes is filled with a body material, and the plurality of annular layers are between the core region and the WLLs in each of the memory holes.

[0087] In some cases, the tunneling layer **464** can comprise multiple layers such as in an oxide-nitride-oxide configuration.

[0088] FIG. **4**F is a schematic diagram of a portion of the memory depicted in FIGS. **3**-**4**E. FIG. **4**F shows physical word lines WLL**0**-WLL**95** running across the entire block. The structure of FIG. **4**F corresponds to portion **306** in Block **2** of FIGS. **4**A-E, including bit lines **411**, **412**, **413**, **414**, . . . **419**. Within the block, each bit line is connected to four

NAND strings. Drain side selection lines SGD**0**, SGD**1**, SGD**2** and SGD**3** are used to determine which of the four NAND strings connect to the associated bit line(s). Source side selection lines SGS**0**, SGS**1**, SGS**2** and SGS**3** are used to determine which of the four NAND strings connect to the common source line. The block can also be thought of as divided into four horizontal sub-blocks HSB**0**, HSB**1**, HSB**2** and HSB**3**. Horizontal sub-block HSB**0** corresponds to those vertical NAND strings controlled by SGD**0** and SGS**0**, Horizontal sub-block HSB**1** corresponds to those vertical NAND strings controlled by SGD**1** and SGS**1**, Horizontal sub-block HSB**2** corresponds to those vertical NAND strings controlled by SGD**2** and SGS**2**, and Horizontal sub-block HSB**3** corresponds to those vertical NAND strings controlled by SGD**3** and SGS**3**.

[0089] FIG. **4**G is a schematic of horizontal sub-block HSB**0**. Horizontal sub-blocks HSB**1**, HSB**2** and HSB**3** have similar structures. FIG. **4**G shows physical word lines WL**0**-WL**95** running across the entire sub-block S**0**. All of the NAND strings of sub-block S**0** are connected to SGD**0** and SGS**0**. FIG. **4**G only depicts six NAND stings **501**, **502**, **503**, **504**, **505** and **506**; however, horizontal sub-block HSB**0** will have thousands of NAND strings (e.g., 15,000 or more).

[0090] FIG. **4**G is being used to explain the concept of a selected memory cell. A memory operation is an operation designed to use the memory for its purpose and includes one or more of reading data, writing/programming data, erasing memory cells, refreshing data in memory cells, and the like. During any given memory operation, a subset of the memory cells will be identified to be subjected to one or more parts of the memory operation. These memory cells identified to be subjected to the memory operation are referred to as selected memory cells. Memory cells that have not been identified to be subjected to the memory operation are referred to as unselected memory cells. Depending on the memory architecture, the memory type, and the memory operation, unselected memory cells may be actively or passively excluded from being subjected to the memory operation.

[0091] As an example of selected memory cells and unselected memory cells, during a programming process, the set of memory cells intended to take on a new electrical characteristic (or other characteristic) to reflect a changed programming state are referred to as the selected memory cells while the memory cells that are not intended to take on a new electrical characteristic (or other characteristic) to reflect a changed programming state are referred to as the unselected memory cells. In certain situations, unselected memory cells may be connected to the same word line as selected memory cells. Unselected memory cells may also be connected to different word lines than selected memory cells. Similarly, during a reading process, the set of memory cells to be read are referred to as the selected memory cells while the memory cells that are not intended to be read are referred to as the unselected memory cells.

[0092] To better understand the concept of selected memory cells and unselected memory cells, assume a programming operation is to be performed and, for example purposes only, that word line WL**94** and horizontal sub-block HS**0** are selected for programming (see FIG. **4**G). That means that all of the memory cells connected to WL**94** that are in horizontal sub-blocks HSB**1**, HSB**2** and HSB**3** (the other horizontal sub-blocks) are unselected memory cells. Some of the memory cells connected to WL**94** in horizontal sub-block HS**0** are selected memory cells and some of the memory cells connected to WL**94** in horizontal sub-block HS**0** are unselected memory cells depending on how the programming operation is performed and the data pattern being programmed. For example, those memory cells that are to remain in the erased state S**0** will be unselected memory cells, because their programming state will not change in order to store the desired data pattern, while those memory cells that are intended to take on a new electrical characteristic (or other characteristic) to reflect a changed programming state (e.g., programmed to states S**1**-S**7**) are selected memory cells. Looking at FIG. **4**G, assume for example purposes, that memory cells **511** and **514** (which are connected to word line WL**94**) are to remain in the erased state; therefore, memory cells **511** and **514** are unselected memory cells (labeled unsel in FIG. **4**G). Additionally, assume for example purposes that memory cells **510**, **512**, **513** and **515** (which are connected to word line WL**94**) are to be programmed to any of the data states S**1**-S**7**; therefore, memory cells **510**, **512**, **513** and **515** are selected memory cells (labeled sel in FIG. **4**G).

[0093] **4**H is a schematic diagram of a NAND string. The NAND string **600** is similar to the NAND string **484** in FIG. **4**C, but has middle junction transistors to separate vertical sub-blocks. The NAND string **600** comprises a first portion of the NAND string (e.g., corresponding with vertical sub-block VSB**0**), a second portion of the NAND string (e.g., corresponding with vertical sub-block VSB**1**), a third portion of the NAND string (corresponding with vertical sub-block VSB**2**), middle junction transistor (MJT**1**) **614** arranged between the first portion of the NAND string and the second portion of the NAND string, and middle junction transistor (MJT**2**) **620** arranged between the second portion of the NAND string and the third portion of the NAND string.

[0094] The first portion of the NAND string has memory cells **610**-**612** connected to word lines WLL**0**-WLL**31**. The second portion of the NAND string has memory cells **616**-**618** connected to word lines WLL**32**-WLL**63**. The third portion of the NAND string has memory cells **622**-**624** connected to word lines WLL**64**-WLL**96**. Not all memory cells of NAND string **600** are depicted in FIG. **4**H. Also included on the NAND string **600** is a first source-side select gate transistor **602** connected to SGS**0**, a second source-side select gate transistor **604** connected to SGS**1**, two dummy memory cell transistors **606**, **608** connected respectively to DWLS**0** and DWLS**1**, two dummy memory cell transistors **626**, **628** connected respectively to DWLD**0** and DWLD**1**, a drain-side select gate transistor **630** connected to SGD**1**, a drain-side select gate transistor **632** connected to SGD**0**. Drain-side select gate transistor **632** is connected to a bit line (BL). First source-side select gate transistor **602** is connected to a source line (SL). In one embodiment, there is a dummy memory cell transistor on each side of each middle junction transistor **614**, **618**.

[0095] According to different embodiments, each middle junction transistor **614**, **618** may be a programmable transistor, such as a floating gate transistor or a charge trap transistor, or a non-programmable transistor, such as an NMOS transistor or a PMOS transistor. Each middle junction transistor **614**, **618** may comprise an NMOS transistor without a charge trap layer between the channel of the NMOS transistor and the gate of the NMOS transistor. In certain embodiments, one middle junction transistor **614**,

618 may comprise a programmable transistor and another middle junction transistor **614**, **618** may comprise a non-programmable transistor. Each middle junction transistor **614**, **618** may have a transistor channel length that is different from the transistor channel lengths used for the memory cell transistors. The channel length may be greater than any of the transistor channel lengths used for the memory cell transistors. For example, the channel length may be three times greater than the transistor channel lengths used for the memory cell transistors. Each middle junction transistors **614**, **618** may electrically isolate the memory cell transistors in different vertical sub-blocks when the middle junction transistor is set into a non-conducting state.

[0096] Although the example memory system of FIGS. **3**-**4**H is a three dimensional memory structure that includes vertical NAND strings with charge-trapping material, other (2D and 3D) memory structures can also be used with the technology described herein.

[0097] FIG. **5** is a flowchart describing one embodiment of a process **500** for programming NAND strings of memory cells organized into an array. In one example embodiment, the process of FIG. **5** is performed on memory die **108** using the control circuit discussed above. For example, the process of FIG. **5** can be performed at the direction of state machine **112**. The process can be used to program a selected word line in a vertical sub-block. Memory cells in other vertical sub-blocks may store valid data when programming the selected word line. In some cases, there is at least one vertical sub-block between the vertical sub-block having the selected word line and the bit line. In some cases, there is at least one vertical sub-block between the vertical sub-block having the selected word line and the source line. In some cases, there is at least one vertical sub-block between the vertical sub-block having the selected word line and the bit line, and there is also at least one vertical sub-block between the vertical sub-block having the selected word line and the source line.

[0098] Typically, the program voltage applied to the control gates (via a selected word line) during a program operation is applied as a series of program pulses. Between programming pulses are a set of verify pulses to perform verification. In many implementations, the magnitude of the program pulses is increased with each successive pulse by a predetermined step size. In step **540** of FIG. **5**, the programming voltage (Vpgm) is initialized to the starting magnitude (e.g., ~12-16V or another suitable level) and a program counter PC maintained by state machine **112** is initialized at 1.

[0099] In one embodiment, the group of memory cells selected to be programmed (referred to herein as the selected memory cells) are programmed concurrently and are all connected to the same word line (the selected word line). There will likely be other memory cells that are not selected for programming (unselected memory cells) that are also connected to the selected word line. That is, the selected word line will also be connected to memory cells that are supposed to be inhibited from programming. For example, when data is written to a set of memory cells, some of the memory cells will need to store data associated with state S**0** (see FIG. **6**) so they will not be programmed. Additionally, as memory cells reach their intended target data state, they will be inhibited from further programming. Those NAND strings (e.g., unselected NAND strings) that include memory cells connected to the selected word line that are to be inhibited from programming have their channels boosted to inhibit programming. When a channel has a boosted voltage, the voltage differential between the channel and the word line is not large enough to cause programming. To assist in the boosting, in step **542** the memory system will pre-charge channels of NAND strings that include memory cells connected to the selected word line that are to be inhibited from programming. In some embodiments, the channel is pre-charged from the drain end of the NAND string. By "drain end" it is meant the end of the NAND string connected to the bit line. In some embodiments, the channel is pre-charged from the source end. By "source end" it is meant the end of the NAND string connected to the source line. In some embodiments, the channel is pre-charged from both the drain end and the source end.

[0100] In one embodiment, during the channel pre-charge phase, an overdrive voltage is applied to some memory cells and a bypass voltage is applied to other memory cells while a pre-charge voltage is applied to one or both ends of an unselected NAND string. The overdrive voltage helps to assure that the pre-charge voltage is passed to the channel of the unselected NAND string. Therefore, channel boosting (at step **544**) is more effective, and program disturb is reduced or prevented.

[0101] In step **544**, NAND strings that include memory cells connected to the selected word line that are to be inhibited from programming have their channels boosted to inhibit programming. In one embodiment, the unselected word lines receive one or more boosting voltages (e.g., ~7-11 volts) to perform boosting schemes.

[0102] In step **546**, a program pulse of the program signal Vpgm is applied to the selected word line (the word line selected for programming). If a memory cell should be programmed, then the corresponding bit line is grounded, in one embodiment. On the other hand, if the memory cell should remain at its current threshold voltage, then the corresponding bit line is connected to Vdd to inhibit programming, in one embodiment. In step **546**, the program pulse is concurrently applied to all memory cells connected to the selected word line so that all of the memory cells connected to the selected word line are programmed concurrently. That is, they are programmed at the same time or during overlapping times (both of which are considered concurrent). In this manner all of the memory cells connected to the selected word line will concurrently have their threshold voltage change, unless they are inhibited from programming.

[0103] In step **546**, the appropriate memory cells are verified using the appropriate set of verify reference voltages to perform one or more verify operations. In one embodiment, the verification process is performed by testing whether the threshold voltages of the memory cells selected for programming have reached the appropriate verify reference voltage.

[0104] In step **548**, it is determined whether all the memory cells have reached their target threshold voltages (pass). If so, the programming process is complete and successful because all selected memory cells were programmed and verified to their target states. A status of "PASS" is reported in step **552**. If, in **550**, it is determined that not all of the memory cells have reached their target threshold voltages (fail), then the programming process continues to step **554**.

[0105] In step **554**, the memory system counts the number of memory cells that have not yet reached their respective target threshold voltage distribution. That is, the system counts the number of memory cells that have, so far, failed the verify process. This counting can be done by the state machine, the controller **122**, or other logic. In one implementation, each of the sense blocks will store the status (pass/fail) of their respective cells. In one embodiment, there is one total count, which reflects the total number of memory cells currently being programmed that have failed the last verify step. In another embodiment, separate counts are kept for each data state.

[0106] In step **556**, it is determined whether the count from step **554** is less than or equal to a predetermined limit. In one embodiment, the predetermined limit is the number of bits that can be corrected by error correction codes (ECC) during a read process for the page of memory cells. If the number of failed cells is less than or equal to the predetermined limit, than the programming process can stop and a status of "PASS" is reported in step **552**. In this situation, enough memory cells programmed correctly such that the few remaining memory cells that have not been completely programmed can be corrected using ECC during the read process. In some embodiments, the predetermined limit used in step **556** is below the number of bits that can be corrected by error correction codes (ECC) during a read process to allows for future/additional errors. When programming less than all of the memory cells for a page, or comparing a count for only one data state (or less than all states), than the predetermined limit can be a portion (pro-rata or not pro-rata) of the number of bits that can be corrected by ECC during a read process for the page of memory cells. In some embodiments, the limit is not predetermined. Instead, it changes based on the number of errors already counted for the page, the number of program-erase cycles performed or other criteria.

[0107] If number of failed memory cells is not less than the predetermined limit, than the programming process continues at step **558** and the program counter PC is checked against the program limit value (PL). Examples of program limit values include 6, 12, 16, 20 and 30; however, other values can be used. If the program counter PC is not less than the program limit value PL, then the program process is considered to have failed and a status of FAIL is reported in step **562**. If the program counter PC is less than the program limit value PL, then the process continues at step **560** during which time the Program Counter PC is incremented by 1 and the program voltage Vpgm is stepped up to the next magnitude. For example, the next pulse will have a magnitude greater than the previous pulse by a step size (e.g., a step size of 0.1-0.4 volts). After step **560**, the process loops back to step **542** and another program pulse is applied to the selected word line so that another iteration (steps **542-560**) of the programming process of FIG. **5** is performed.

[0108] At the end of a successful programming process (with verification), the threshold voltages of the memory cells should be within one or more distributions of threshold voltages for programmed memory cells or within a distribution of threshold voltages for erased memory cells, as appropriate. FIG. **6** illustrates example threshold voltage distributions for the memory array when each memory cell stores three bits of data. Other embodiments, however, may use other data capacities per memory cell (e.g., such as one, two, four, or five bits of data per memory cell). FIG. **6** shows eight threshold voltage distributions, corresponding to eight data states. The first threshold voltage distribution (data state) S**0** represents memory cells that are erased. The other seven threshold voltage distributions (data states) S**1**-S**7** represent memory cells that are programmed and, therefore, are also called programmed states. Each threshold voltage distribution (data state) corresponds to predetermined values for the set of data bits. The specific relationship between the data programmed into the memory cell and the threshold voltage levels of the cell depends upon the data encoding scheme adopted for the cells. In one embodiment, data values are assigned to the threshold voltage ranges using a Gray code assignment so that if the threshold voltage of a memory erroneously shifts to its neighboring physical state, only one bit will be affected.

[0109] FIG. **6** shows seven read reference voltages, Vr**1**, Vr**2**, Vr**3**, Vr**4**, Vr**5**, Vr**6**, and Vr**7** for reading data from memory cells. By testing (e.g., performing sense operations) whether the threshold voltage of a given memory cell is above or below the seven read reference voltages, the system can determine what data state (i.e., S**0**, S**1**, S**2**, S**3**, . . .) a memory cell is in.

[0110] FIG. **6** also shows seven verify reference voltages, Vv**1**, Vv**2**, Vv**3**, Vv**4**, Vv**5**, Vv**6**, and Vv**7**. When programming memory cells to data state S**1**, the system will test whether those memory cells have a threshold voltage greater than or equal to Vv**1**. When programming memory cells to data state S**2**, the system will test whether the memory cells have threshold voltages greater than or equal to Vv**2**. When programming memory cells to data state S**3**, the system will determine whether memory cells have their threshold voltage greater than or equal to Vv**3**. When programming memory cells to data state S**4**, the system will test whether those memory cells have a threshold voltage greater than or equal to Vv**4**. When programming memory cells to data state S**5**, the system will test whether those memory cells have a threshold voltage greater than or equal to Vv**5**. When programming memory cells to data state S**6**, the system will test whether those memory cells have a threshold voltage greater than or equal to Vv**6**. When programming memory cells to data state S**7**, the system will test whether those memory cells have a threshold voltage greater than or equal to Vv**7**. FIG. **6** also shows Vev, which is a voltage level to test whether a memory cell has been properly erased.

[0111] In one embodiment, known as full sequence programming, memory cells can be programmed from the erased data state S**0** directly to any of the programmed data states S**1**-S**7**. For example, a population of memory cells to be programmed may first be erased so that all memory cells in the population are in erased data state S**0**. Then, a programming process is used to program memory cells directly into data states S**1**, S**2**, S**3**, S**4**, S**5**, S**6**, and/or S**7**. For example, while some memory cells are being programmed from data state S**0** to data state S**1**, other memory cells are being programmed from data state S**0** to data state S**2** and/or from data state S**0** to data state S**3**, and so on. The arrows of FIG. **6** represent the full sequence programming. In some embodiments, data states S**1**-S**7** can overlap, with controller **122** relying on error correction to identify the correct data being stored.

[0112] The technology described herein can also be used with other types of programming in addition to full sequence programming (including, but not limited to, multiple stage/

phase programming). In one embodiment of multiple stage/phase programming, all memory cell to end up in any of data states S**4**-S**7** are programmed to an intermediate state that is no higher than S**4** in a first phase. Memory cells to end up in any of data states S**0**-S**3** do not receive programming in the first phase. In a second phase, memory cells to end up in either data state S**2** or S**3** are programmed to a state that is no higher than S**2**; memory cells to end up in either data state S**6** or S**7** are programmed to a state that is no higher than S**6**. In at third phase, the memory cells are programmed to their final states. In one embodiment, a first page is programmed in the first phase, a second page is programmed in the second phase, and a third page is programmed in the third phase. Herein, once on page has been programmed into a group of memory cells, the memory cells can be read back to retrieve the page. Hence, the intermediate states associated with multi-phase programming are considered herein to be programmed states.

[0113] In general, during verify operations and read operations, the selected word line is connected to a voltage (one example of a reference signal), a level of which is specified for each read operation (e.g., see read compare levels Vr**1**, Vr**2**, Vr**3**, Vr**4**, Vr**5**, Vr**6**, and Vr**7**, of FIG. **6**) or verify operation (e.g. see verify target levels Vv**1**, Vv**2**, Vv**3**, Vv**4**, Vv**5**, Vv**6**, and Vv**7** of FIG. **6**) in order to determine whether a threshold voltage of the concerned memory cell has reached such level. After applying the word line voltage, the conduction current of the memory cell is measured to determine whether the memory cell turned on (conducted current) in response to the voltage applied to the word line. If the conduction current is measured to be greater than a certain value, then it is assumed that the memory cell turned on and the voltage applied to the word line is greater than the threshold voltage of the memory cell. If the conduction current is not measured to be greater than the certain value, then it is assumed that the memory cell did not turn on and the voltage applied to the word line is not greater than the threshold voltage of the memory cell. During a read or verify process, the unselected memory cells are provided with one or more read pass voltages (also referred to as bypass voltages) at their control gates so that these memory cells will operate as pass gates (e.g., conducting current regardless of whether they are programmed or erased).

[0114] There are many ways to measure the conduction current of a memory cell during a read or verify operation. In one example, the conduction current of a memory cell is measured by the rate it discharges or charges a dedicated capacitor in the sense amplifier. In another example, the conduction current of the selected memory cell allows (or fails to allow) the NAND string that includes the memory cell to discharge a corresponding bit line. The voltage on the bit line is measured after a period of time to see whether it has been discharged or not. Note that the technology described herein can be used with different methods known in the art for verifying/reading. Other read and verify techniques known in the art can also be used.

[0115] FIG. **6** also shows an overdrive voltage Vpre_OD, which may be applied to control gates of data memory cells in step **542**. The overdrive voltage is above all of the data states. Therefore, the overdrive voltage Vpre_OD will be above the threshold voltage of a data memory cell that is in any of the data states S**0**-S**7**. Thus, the overdrive voltage, when applied to a control gate of a data memory cell during a pre-charge phase of a programming operation, will cause the memory cell to operate as a pass gate (e.g., conduct a current) whether the memory cell is in a programmed state or an erased state.

[0116] The system uses a "bypass voltage" during the pre-charge phase of step **542**, in one embodiment. The bypass voltage is at least Vev, but no greater than Vv**7**, in one embodiment. For example, the bypass voltage could be Vr**1**, Vv**1**, Vv**2**, etc. Thus, the bypass voltage, when applied to a control gate of a data memory cell during a pre-charge phase of a programming operation, will cause the memory cell to operate as a pass gate if the memory cell is in an erased state, but not act as a pass gate for at least one programmed state.

[0117] FIG. **7** is a flowchart of one embodiment of a process **700** of inhibiting memory cells from programming during a programming operation. Process **700** may be performed once during each program loop of process **500**. However, process **700** is not limited to use in process **500**. The process **700** may be used to program selected memory cells of group of NAND strings. In particular, the NAND strings are connected to group of word lines, with one of the word lines being selected for programming. Some of the memory cells ("selected memory cells") connected to the selected word line are to be programmed, but other memory cells ("unselected memory cells") connected to the selected word line are to be inhibited from programming.

[0118] The process **700** can be used to program a selected word line in a vertical sub-block. Memory cells in other vertical sub-blocks may store valid data when programming the selected word line. In some cases, there is at least one vertical sub-block between the vertical sub-block having the selected word line and the bit line. In some cases, there is at least one vertical sub-block between the vertical sub-block having the selected word line and the source line. In some cases, there is at least one vertical sub-block between the vertical sub-block having the selected word line and the bit line, and there is also at least one vertical sub-block between the vertical sub-block having the selected word line and the source line. The process **700** will be described with respect to a first vertical sub-block and a second vertical sub-block. There is at least a third vertical sub-block, in one embodiment. In one embodiment, the first vertical sub-block is VSB**2** and the second vertical sub-block is VSB**1**. In one embodiment, the first vertical sub-block is VSB**0** and the second vertical sub-block is VSB**1**.

[0119] Process **700** is divided into a pre-charge phase and a program phase. The pre-charge phase (steps **702**-**706**) may be performed in step **542** of process **500**. Steps **702**-**706** may overlap in time. The program phase includes step **708** (which may be performed in step **544** of process **500**) and step **710** (which may be performed in step **546** of process **500**). The pre-charge phase is defined herein as a phase of a program operation of selected memory cells connected to a selected word line in which channels of unselected NAND strings connected to the selected word line are pre-charged to a desired voltage level. The program phase is defined herein as a phase of the program operation in which selected memory cells connected to the selected word line are programmed and unselected memory cells connected to the selected word line are inhibited from programming.

[0120] Step **702** includes applying a pre-charge voltage to an end of an unselected NAND string. The pre-charge voltage is a voltage that is used to pre-charge the channel of the unselected NAND string prior to boosting the channel. An example magnitude for the pre-charge voltage is 2.5V.

Step **702** may include increasing a voltage at a first end of the unselected NAND string to a pre-charge voltage. In one embodiment, the pre-charge voltage is applied to a bit line connected to a drain side select transistor at one end of the unselected NAND string. In one embodiment, the pre-charge voltage is applied to a source line connected to a source side select transistor at the other end of the unselected NAND string. In one embodiment, a pre-charge voltage is applied to both the bit line and to the source line. These two pre-charge voltages could have the same magnitude, but that is not required.

[0121] Step **704** includes applying an over-drive voltage to programmed data word lines in a first vertical sub-block that is between the end of the NAND string to which the pre-charge voltage was applied and a second vertical sub-block. The over-drive voltage is applied while the first end of the NAND string is at the pre-charge voltage in step **702**. In one embodiment, the over-drive voltage is applied to all programmed word in the first vertical sub-block. Herein, a "programmed data word line" refers to a word line having at least one memory cell that is in a programmed state. With reference to FIG. **4**C, the first vertical sub-block may be VSB**2** and the second vertical sub-block may be VSB**1**. With reference to FIG. **4**C, the first vertical sub-block may be VSB**0** and the second vertical sub-block may be VSB**1**. Process **700** is not limited to these examples.

[0122] In one embodiment, step **704** includes increasing the voltage on programmed data word lines in the first vertical sub-block and the second vertical sub-block to the overdrive voltage after the voltage on the first end of the unselected NAND string stabilizes at the pre-charge voltage. Waiting until the pre-charge voltage stabilizes may help to prevent or reduce effects such as hot electron injection disturb. This type of disturb may arise if the potential gradient in a region of the NAND channel is large enough to create electron/hole generation. Hot electrons which are created from the electron/hole generation can be injected into the charge trapping region of a memory cell, thereby causing program disturb.

[0123] Step **706** includes applying a bypass voltage to data word lines in the second vertical sub-block. The bypass voltage is applied while the first end of the NAND string is at the pre-charge voltage in step **702**. The bypass voltage is applied while the overdrive voltage is being applied in step **704**. In one embodiment, the bypass voltage is applied to all data word lines in the second vertical sub-block. The second vertical sub-block has one selected data word line and one or more unselected data word lines. The unselected data word lines may be programmed (e.g., one or more memory cells in a programmed state) or unprogrammed. An unprogrammed data word line refers to one in which all memory cells connected to the word line are in the erased state.

[0124] Step **708** includes applying a boost voltage to data word lines in the first vertical sub-block and unselected data word lines in the second vertical sub-block. A boost voltage can be applied to other data word lines as well. A different magnitude of boost voltage can be used for different word lines. Boost voltages may also be applied to dummy word lines. Step **708** boosts the voltage of the channel of the unselected NAND string after pre-charging the channel. Step **708** boosts the voltage of the channel of the unselected memory cell after pre-charging the channel of the unselected memory cell, in one embodiment. In one embodiment, step **708** raises voltage at the unselected memory cell from the pre-charge voltage to an inhibit voltage during the program phase in a program voltage (see step **710**) is applied to the unselected memory cell. The inhibit voltage is defined as a voltage in the channel of the unselected memory cell configured to inhibit programming of the unselected memory cell.

[0125] Step **710** includes applying a program voltage to a selected word line in the second vertical sub-block. The program voltage is applied after the boost voltage has been applied to data word lines, and while the boost voltage continues to be applied to unselected data word lines. Thus, the program voltage is applied to the selected word line while maintaining the channel of the unselected NAND string at an inhibit (or "boosted") voltage. As noted above, the control gate of the unselected memory cell (on the unselected NAND string) is connected to the selected word line. Thus, the program voltage is applied to the control gate of the unselected memory cell while maintaining the channel of the unselected memory cell at an inhibit (or "boosted") voltage.

[0126] FIG. **8**A is a flowchart of one embodiment of a process **800** of a pre-charge phase of a program operation. In process **800**, the channels of unselected NAND strings are pre-charged from the bit line. Process **800** may be used in step **542** of process **500**. Process **800** provides details of one embodiment of the pre-charge phase (e.g., steps **702**-**706**) of process **700**. Process **800** will be described with respect to an upper vertical sub-block (e.g., VSB**2**), a middle vertical sub-block (e.g., VSB**1**), and a lower vertical sub-block VSB**0**, but is not limited thereto. The process **800** could be applied with just two vertical sub-blocks, or with more than three vertical sub-blocks. Process **800** will be described with respect to times t**1**-t**4** of the timing diagram of FIG. **8**B. FIG. **8**B shows timing of voltages during one embodiment of programming NAND having multiple vertical sub-blocks. In general, times t**1**-t**4** correspond to one embodiment of a pre-charge phase, and times t**5**-t**9** correspond to one embodiment of a program phase.

[0127] In step **802**, a program enable voltage is applied to selected bit lines. A selected bit line refers to a bit line that is connected to at least one NAND string having a memory cell to receive programming. The voltage on the selected bit line may be kept at this program enable voltage throughout the pre-charge phase, as well as during a program phase. The program enable voltage will enable programming of a selected memory cell during the programming phase. With reference to FIG. **8**A, the voltage on the selected bit line (BL(sel)) is kept at Vss from time t**0** to t**9**. Vss is 0V, in one embodiment.

[0128] In step **804**, a pre-charge voltage is applied to unselected bit lines. An unselected bit line refers to a bit line for which each NAND string has a memory cell that is to be inhibited from programming. With reference to FIG. **8**B, at time t**1**, the voltage on the unselected bit line (BL(unsel)) is raised towards the pre-charge voltage (Vprechg). An example of Vprechg is about 2.5V. The pre-charge voltage is maintained on the unselected bit line until time t**4**.

[0129] In step **806**, a selection voltage is applied to a drain side select line (SGD) to turn on drain side select gates of NAND strings. The selection voltage may be applied to both selected and unselected SGD in a block. The SGD are used to select horizontal sub-blocks, in one embodiment. In a selected horizontal sub-block, at least one memory cell is selected for programming. In an unselected horizontal sub-

block, no memory cell is selected for programming. Thus, a selected SGD is connected to at least one NAND string having a memory cell to receive programming. With reference to FIG. **8**B, at time t**1**, the selected drain side select line(s) (SGD(sel)) are raised to Vsg (e.g., ~6 volts). With reference to FIG. **8**B, at time t**1**, the unselected drain side select line(s) (SGD(unsel)) are raised to Vsg (e.g., ~6 volts). Turning on a drain side select transistor will connect the channel of the NAND string to a bit line. The select line voltages are maintained at Vsg until time t**3**.

[0130] In step **808**, the source line is biased and an unselect voltage is applied to a source side selected line (SGS) to keep source side select gates off. With reference to FIG. **8**B, at time t**1**, the voltage on the source line is raised to Vcsrc (e.g. ~2.5-3.5 volts). The voltage on the source side select lines (SGS) is kept at Vss from time t**0** to t**9**.

[0131] In step **810**, a bypass voltage is applied to data word lines. The bypass voltage may be applied to all data word lines. FIG. **8**B shows voltages for data word lines in the upper vertical sub-block VSB**2** that are not programmed (WL_VSB**2**(no data)), data word lines in the upper vertical sub-block VSB**2** that are programmed (WL_VSB**2**(data)), data word lines in the middle vertical sub-block VSB**1** that are not selected for programming (WL_VSB**1**(unsel)), the selected data word lines in the middle vertical sub-block VSB**1** (WL_VSB**1**_*sel*), and data word lines in the lower vertical sub-block VSB**0**. At time t**1** all of these data word lines are raised to V_bypass. The bypass voltage is maintained until time t**3** for data word lines in VSB**2** that are not programmed (WL_VSB**2**(no data)), data word lines in VSB**1** that are not selected for programming (WL_VSB**1** (unsel)), the selected data word lines in VSB**1** (WL_VSB**1**_*sel*), and data word lines in VSB**0**.

[0132] In step **812**, a dummy pre-charge voltage is applied to dummy word lines. The dummy pre-charge voltage may be applied to all dummy word lines. The dummy pre-charge voltage has a magnitude such that the dummy memory cells will operate as a pass gate (e.g., conduct a current). The magnitude can differ for the different dummy word lines. With reference to FIG. **8**B, the voltage on the dummy word lines (WDL) is raised to Vpre_dmy at time t**1** and maintained until time t**3**. An example of Vpre_dmy is 5V, assuming that the threshold voltage is less than 5V.

[0133] In step **814**, the voltage on programmed word lines in the upper vertical sub-block VSB**2** is increased from the bypass voltage to an overdrive voltage after the pre-charge voltage on the bit line stabilizes. With reference to FIG. **8**B, at time t**2**, the voltage on WL_VSB**2**(data) is increased from V_bypass to Vpre_OD. Note that by time t**2**, the voltage on the unselected bit line has stabilized at Vprechg. Waiting until time t**2** allows the pre-charge voltage on the unselected bit line to stabilize. Thus, time t**2** is after the transient period in which the voltage on the unselected bit line increasing to Vprechg. Waiting until the pre-charge voltage stabilizes on the unselected bit line may help to prevent or reduce effects such as injection disturb. As discussed above, injection disturb can result in hot electrons being injected to the charge storage region of memory cells. Also, the overdrive voltage (Vpre_OD) is applied too soon, then the channel of the NAND string might not yet be conducting. Rather, the NAND string channel might be floating. Hence, by time t**2**, the NAND channel is conducting, in one embodiment.

[0134] Thus, with respect to FIG. **8**B, between time t**2** and t**3**, the channels of unselected NAND strings is pre-charged. FIG. **8**C is a block diagram to illustrate one embodiment of charging the channels of unselected NAND strings from the bit line. The diagram represents four example NAND strings **811**, **815**, **817**, and **819**. The NAND strings may be part of the same block. With reference to FIG. **4**F, each NAND string **811**, **815**, **817**, and **819** resides in a different horizontal sub-block, in one embodiment. For example, NAND string **811** may reside in HSB**0**, NAND string **815** may reside in HSB**1**, NAND string **817** may reside in HSB**2**, and NAND string **819** may reside in HSB**3**. The four NAND strings **811**, **815**, **817**, and **819** are connected to the same bit line (BL), and to the same source line (SL). For example, the four NAND strings **811**, **815**, **817**, and **819** might be connected to bit line **411**.

[0135] Each NAND string has memory cells in three vertical sub-blocks (VSB**0**, VSB**1**, VSB**2**). To simplify the drawing there are fewer memory cells per vertical sub-block in FIG. **8**C, relative to FIG. **4**F. The data word lines (WL**0**-WL**17**) and the dummy word lines (DWLs, DWL**1**, DWL**2**, DWLd) are shared by the four NAND strings **811**, **815**, **817**, and **819**, as well as with other NAND strings in the block. The drain side select lines (SGD**0**, SGD**1**, SGD**2**, SGD**3**) are not shared by the four NAND strings **811**, **815**, **817**, and **819**, but are shared with other NAND strings in the block. The source side select lines (SGS**0**, SGS**1**, SGS**2**, SGS**3**) are not shared by the four NAND strings **811**, **815**, **817**, and **819**, but are shared with other NAND strings in the block.

[0136] All of the word lines (WL**0**-WL**5**) in VSB**0** are programmed, in the example of FIG. **8**C. Note that it might be that the memory cell (connected to a programmed word line) on a given NAND string is in the erased state. However, there is at least one memory cell (and likely many memory cells) that is in a programmed state on a programmed word line. Three of the word lines (WL**12**-WL**14**) in VSB**2** are programmed, and three of the word lines (WL**15**-WL**17**) are unprogrammed. One of the word lines (WL**7**) in vertical sub-block VSB**1** is selected for programming. However, the memory cells in NAND strings **811**, **815**, **817**, and **819** connected to WL**7** are not selected for programming. Hence, these memory cells are to be inhibited from programming when a program voltage is applied to the selected word line. The other word lines in VSB**1** may be programmed or unprogrammed. In one embodiment, programming in VSB**1** proceeds from WL**6** to WL**11**. Thus, WL**6** is programmed and WL**8**-WL**11** are not yet programmed when WL**7** is selected for programming, in one embodiment.

[0137] FIG. **8**C shows the voltages that are applied between time t**2** and t**3** in the timing diagram in FIG. **8**B. These voltages result in the pre-charge voltage passing from the bit line at least as far as the memory cells (on NAND strings **811**, **815**, **817**, and **819**) at the selected word line (WL**7**) in VSB**1**.

[0138] As noted herein, after the pre-charge phase, there is a programming phase. With reference to FIG. **8**B, after time t**3**, the voltage on the SGD, DWL, and data word lines is brought down. However, the voltage on the unselected bit line may remain at the pre-charge voltage until time t**4**. At time t**4**, the voltage on the unselected bit line may be changed to an inhibit voltage. In one embodiment, the magnitude of Vinhibit and Vprechg are the same.

[0139] The time period of FIG. **8**B from t**5**-t**9** corresponds to a program phase in which channels of unselected NAND

strings are boosted and a program voltage is applied to a selected word line (see steps **708** and **710** of FIG. **7**). At time t**4**, the unselected bit lines are lowered from Vprecharge to Vinhibit (e.g. ~1-3.5 volts). Note that in some embodiments, Vprecharge and Vinhibit have the same magnitude. Vinhibit could be greater than Vprecharge. At time t**5**, the drain side selection line SGD(sel) connected to a selected horizontal sub-block is raised to Vsgd (e.g., ~3 volts), the selected word line WL_VSB**1**_*sel* is raised to a boosting voltage Vpass (e.g., 6-10 volts), the unselected data word lines (WL_VSB**2** (no data), WL_VSB**2**(data), and WL_VSB**1** unsel WL_VSB**0**) are raised to the boosting voltage Vpass. The dummy word lines (DWL) are raised to a boosting voltage (Vpass_dmy). In some embodiments, the data word line will receive the same boosting voltage Vpass. In other embodiments different word lines may receive a different boosting voltage. For example, the magnitude of the boosting voltage may depend on the vertical sub-block.

[0140] Because the bit lines of unselected NAND strings will be at Vinhibit, the select gates will cut off the connected bit line from the channel and the boosting voltages (e.g., Vpass) will cause the channel voltage to increase (boosted). Because the channel voltage increases, the differential between the channel voltage (of the unselected memory cell) and the selected word line (and hence control gate of unselected memory cell) will be too small to allow for programming of the unselected memory cell.

[0141] At time t**7**, the selected word line WLn is lowered to ground. At time t**8**, the unselected bit lines BL(unsel), drain side selection line SGD(sel) for selected sub-blocks, dummy word lines (DWL), unselected data word lines (WL_VSB**2** (no data), WL_VSB**2**(data), WL_VSB**1** unsel, WL_VSB**0**) are lowered to ground.

[0142] FIG. **9**A is a flowchart of one embodiment of a process **900** of a pre-charge phase of a program operation. In process **900** the channels of unselected NAND strings are pre-charged from the source line. Process **900** may be used in step **542** of process **500**. Process **900** provides details of one embodiment of the pre-charge phase (e.g., steps **702**-**706**) of process **700**. Process **900** will be described with respect to an upper vertical sub-block (e.g., VSB**2**), a middle vertical sub-block (e.g., VSB**1**), and a lower vertical sub-block VSB**0**, but is not limited thereto. The process **900** could be applied with just two vertical sub-blocks, or with more than three vertical sub-blocks. Process **900** will be described with respect to times t**1**-t**4** of the timing diagram of FIG. **9**B. FIG. **9**B shows timing of voltages during one embodiment of programming NAND having multiple vertical sub-blocks. In general, times t**1**-t**4** correspond to one embodiment of a pre-charge phase, and times t**5**-t**9** correspond to one embodiment of a program phase.

[0143] In step **902**, bit line voltages are established. With reference to FIG. **9**A, the voltage on both the selected bit line (BL(sel)) and the unselected bit lines (BL(unsel)) are kept at Vss throughout the pre-charge phase from time t**0** to t**4**. Vss is 0V, in one embodiment.

[0144] In step **904**, voltages to the SGD lines are established. With reference to FIG. **9**A, the voltage on both the SGD for selected horizontal sub-blocks (SGD(sel)) and the SGD for unselected horizontal sub-blocks (SGD(unsel)) are kept at Vss throughout the pre-charge phase from time t**0** to t**5**. Vss is 0V, in one embodiment.

[0145] In step **906**, a pre-charge voltage is applied to the source line. With reference to FIG. **9**B, at time t**1**, the source line (SL) are raised to Vprecharge (e.g., ~2.5 volts). The pre-charge voltage is maintained on the source line until time t**4**.

[0146] In step **908**, a selection voltage is applied to source side select lines (SGS) to turn on source side select gates of NAND strings. With reference to FIG. **9**B, at time t**1**, the source side select line(s) (SGS) are raised to Vsg (e.g., ~6 volts). Turning on a source side select transistor will connect the channel of the NAND string to a source line. The SGS lines are maintained at Vsg until time t**3**.

[0147] In step **910**, a bypass voltage is applied to data word lines. FIG. **9**B shows voltages for data word lines in the lower vertical sub-block VSB**0** that are not programmed (WL_VSB**0**(no data)), data word lines in the lower vertical sub-block VSB**0** that are programmed (WL_VSB**0**(data)), data word lines in the middle vertical sub-block VSB**1** that are not selected for programming (WL_VSB**1**(unsel)), the selected data word lines in the middle vertical sub-block VSB**1** (WL_VSB**1**_*sel*), and data word lines in the upper vertical sub-block VSB**2**. At time t**1** all of these data word lines are raised to V_bypass. The bypass voltage is maintained until time t**3** for word lines in the lower vertical sub-block VSB**0** that are not programmed (WL_VSB**0**(no data)), data word lines in the middle vertical sub-block VSB**1** that are not selected for programming (WL_VSB**1** (unsel)), the selected data word lines in the middle vertical sub-block VSB**1** (WL_VSB**1**_*sel*), and data word lines in the upper vertical sub-block VSB**2**.

[0148] In step **912**, a dummy pre-charge voltage is applied to all dummy word lines. This is a voltage that has a magnitude such that the dummy memory cells will operate as a pass gate (e.g., conduct a current). The magnitude can differ for the different dummy word lines. With reference to FIG. **9**B, the voltage on the dummy word lines (WDL) is raised to Vpre_dmy at time t**1** and maintained until time t**3**. An example of Vpre_dmy is 5V, assuming that the threshold voltage is less than 5V.

[0149] In step **914**, the voltage on programmed word lines in the lower vertical sub-block VSB**0** is increased from the bypass voltage to an overdrive voltage after the pre-charge voltage on the source line stabilizes. With reference to FIG. **9**B, at time t**2**, the voltage on WL_VSB**0**(data) is increased from V_bypass to Vpre_OD. Note that by time t**2**, the voltage on the source line has stabilized at Vprechg. Waiting until time t**2** allows the pre-charge voltage on the source line to stabilize. Thus, time t**2** is after the transient period in which the voltage on the source line increasing to Vprechg. Waiting until the pre-charge voltage stabilizes on the source line may help to prevent or reduce effects such as injection disturb. Also, the overdrive voltage (Vpre_OD) is applied too soon, then the channel of the NAND string might not yet be conducting. Rather, the NAND string channel might be floating. Hence, by time t**2**, the NAND channel is conducting, in one embodiment.

[0150] Thus, with respect to FIG. **9**B, between time t**2** and t**3**, the channel of unselected NAND strings is pre-charged. FIG. **9**C is a block diagram to illustrate one embodiment of charging the channels of unselected NAND strings from the source line. The diagram shows the four example NAND strings **811**, **815**, **817**, and **819** of FIG. **8**C, but under different conditions. Four of the word lines (WL**0**-WL**3**) in the lower vertical sub-block VSB**0** are programmed, and two of the word lines (WL**4**-WL**5**) are not programmed, in the example of FIG. **9**C. Three of the word lines (WL**12**-WL**14**)

in the upper vertical sub-block VSB**2** are programmed, and three of the word lines (WL**15**-WL**17**) are unprogrammed. One of the word lines (WL**7**) in the middle vertical sub-block VSB**1** is selected for programming. However, the memory cells in NAND strings **811**, **815**, **817**, and **819** connected to WL**7** are not selected for programming. Hence, these memory cells are to be inhibited from programming when a program voltage is applied to the selected word line. The other word lines in VSB**1** may be programmed or unprogrammed. In one embodiment, programming in the middle vertical sub-block VSB**1** proceeds from WL**11** to WL**6**. Thus, WL**11**-WL**8** are programmed and WL**6** is not yet programmed when WL**7** is selected for programming, in one embodiment.

[0151] FIG. **9**C shows the voltages that are applied between time t**2** and t**3** in the timing diagram in FIG. **9**B. These voltages result in the pre-charge voltage passing from the source line at least as far as the memory cells (on NAND strings **811**, **815**, **817**, and **819**) at the selected word line (WL**7**) in VSB**1**.

[0152] After the pre-charge phase, there is a programming phase. With reference to FIG. **9**B, the timing of the voltages between time t**5**-t**9** is similar to the timing of the voltages between time t**5**-t**9** in FIG. **8**B.

[0153] FIG. **10**A is a flowchart of one embodiment of a process **1000** of a pre-charge phase of a program operation. In process **1000** the channels of unselected NAND strings are pre-charged from both the bit line and the source line. Process **1000** may be used in step **542** of process **500**. Process **1000** provides details of one embodiment of the pre-charge phase (e.g., steps **702**-**706**) of process **700**. Process **1000** will be described with respect to times t**1**-t**4** of the timing diagram of FIG. **10**B. FIG. **10**B shows timing of voltages during one embodiment of programming NAND having multiple vertical sub-blocks. In general, times t**1**-t**4** correspond to one embodiment of a pre-charge phase, and times t**5**-t**9** correspond to one embodiment of a program phase.

[0154] In step **1002**, a program enable voltage is applied to selected bit lines. The voltage on the selected bit line may be kept at this program enable voltage throughout the pre-charge phase, as well as during a program phase. The program enable voltage will enable programming of a selected memory cell during the programming phase. With reference to FIG. **10**A, the voltage on the selected bit line (BL(sel)) is kept at Vss from time t**0** to t**9**. Vss is 0V, in one embodiment.

[0155] In step **1004**, a pre-charge voltage is applied to unselected bit lines. With reference to FIG. **10**B, at time t**1**, the voltage on the unselected bit line (BL(unsel)) is raised towards the pre-charge voltage (Vprechg). An example of Vprechg is about 2.5V. The pre-charge voltage is maintained on the unselected bit line until time t**4**.

[0156] In step **1006**, a pre-charge voltage is applied to the source line. With reference to FIG. **10**B, at time t**1**, the source line (SL) are raised to Vprecharge (e.g., ~2.5 volts). The pre-charge voltage is maintained on the source line until time t**4**.

[0157] In step **1008**, voltages to the SGD and SGS lines are established. With reference to FIG. **10**B, at time t**1**, the selected drain side select line(s) (SGD(sel)) are raised to Vsg (e.g., ~6 volts). With reference to FIG. **10**B, at time t**1**, the unselected drain side select line(s) (SGD(unsel)) are raised to Vsg (e.g., ~6 volts). Turning on a drain side select transistor will connect the channel of the NAND string to a bit line. With reference to FIG. **10**B, at time t**1**, the source side select line(s) (SGS) are raised to Vsg (e.g., ~6 volts). The select line voltages are maintained at Vsg until time t**3**.

[0158] In step **1010**, a bypass voltage is applied to data word lines. FIG. **10**B shows voltages for unselected data word lines that are not programmed (WL_unsel(no data)), unselected data word lines that are programmed (WL_unsel (data)), and the selected data word lines in VSB**1** (WL_VSB**1**_*sel*). At time t**1** all of these data word lines are raised to V_bypass. The bypass voltage is maintained until time t**3** for unselected data word lines that are not programmed (WL_unsel(no data)) and the selected data word lines in VSB**1** (WL_VSB**1**_*sel*).

[0159] In step **1012**, a dummy pre-charge voltage is applied to all dummy word lines. This is a voltage that has a magnitude such that the dummy memory cells will operate as a pass gate (e.g., conduct a current). The magnitude can differ for the different dummy word lines. With reference to FIG. **9**B, the voltage on the dummy word lines (WDL) is raised to Vpre_dmy at time t**1** and maintained until time t**3**. An example of Vpre_dmy is 5V, assuming that the threshold voltage is less than 5V.

[0160] In step **1014**, the voltage on unselected programmed word lines is increased from the bypass voltage to an overdrive voltage after the pre-charge voltage on both the bit line and source line stabilizes. With reference to FIG. **10**B, at time t**2**, the voltage on WL_unsel(data) is increased from V_bypass to Vpre_OD. Note that by time t**2**, the voltage on both the bit line and the source line has stabilized at Vprechg. Waiting until time t**2** allows the pre-charge voltages on the bit line and the source line to stabilize. Waiting until the pre-charge voltage stabilizes may help to prevent or reduce effects such as injection disturb. Also, the overdrive voltage (Vpre_OD) is applied too soon, then the channel of the NAND string might not yet be conducting. Rather, the NAND string channel might be floating. Hence, by time t**2**, the NAND channel is conducting, in one embodiment.

[0161] Thus, with respect to FIG. **10**B, between time t**2** and t**3**, the channel of unselected NAND strings is pre-charged. FIG. **10**C is a block diagram to illustrate one embodiment of charging the channels of unselected NAND strings from both the bit line and the source line. The diagram shows the four example NAND strings **811**, **815**, **817**, and **819** of FIGS. **8**C and **9**C, but under different conditions. Four of the word lines (WL**0**-WL**3**) in the lower vertical sub-block VSB**0** are programmed, and two of the word lines (WL**4**-WL**5**) are not programmed, in the example of FIG. **9**C. Three of the word lines (WL**12**-WL**14**) in the upper vertical sub-block VSB**2** are programmed, and three of the word lines (WL**15**-WL**17**) are unprogrammed. One of the word lines (WL**6**) in vertical sub-block VSB**1** is programmed. Four of the word lines (WL**8**-WL**11**) in the middle vertical sub-block VSB**1** are not yet programmed. One of the word lines (WL**7**) in vertical sub-block VSB**1** is selected for programming. However, the memory cells in NAND strings **811**, **815**, **817**, and **819** connected to WL**7** are not selected for programming. Hence, these memory cells are to be inhibited from programming when a program voltage is applied to the selected word line. In the example of FIG. **10**C, programming in VSB**1** proceeds from WL**6** to WL**11**. However, programming could be performed in a different order.

[0162] FIG. **10**C shows the voltages that are applied between time t**2** and t**3** in the timing diagram in FIG. **10**B. These voltages result in the pre-charge voltage passing from the bit line at least as far as the memory cells (on NAND strings **811**, **815**, **817**, and **819**) at the selected word line (WL**7**) in VSB**1**. These voltages also result in the pre-charge voltage passing from the source line at least as far as the memory cells (on NAND strings **811**, **815**, **817**, and **819**) at the selected word line (WL**7**) in VSB**1**.

[0163] A first embodiment disclosed herein includes an apparatus comprising a plurality of NAND strings of memory cells organized into an array. Each NAND string has a first set of memory cells between a first end of the NAND string and a second set of memory cells. The apparatus further includes a control circuit configured to apply a pre-charge voltage to the first end of an unselected NAND string during a pre-charge phase of a programming operation of a memory cell on a selected NAND string. The control circuit is further configured to apply an overdrive voltage to programmed memory cells of the first set while applying a bypass voltage to an unprogrammed memory cell of the second set and while applying the pre-charge voltage to the first end such that the pre-charge voltage charges a channel coupled to an unselected memory cell on the unselected NAND string. The unprogrammed memory cell is positioned between the first set of memory cells and the unselected memory cell. The control circuit is further configured to raise voltage at the unselected memory cell from the pre-charge voltage to an inhibit voltage during a program phase of the programming operation which applies a program voltage to the unselected memory cell.

[0164] In a second embodiment disclosed herein includes, and in furtherance of the first embodiment, the apparatus further comprises a bit line connected to the first end of the unselected NAND string. The control circuit is configured to apply the pre-charge voltage to bit line.

[0165] In a third embodiment disclosed herein includes, and in furtherance of the first embodiment, the apparatus further comprises a source line connected to the first end of the unselected NAND string. The control circuit is configured to apply the pre-charge voltage to source line.

[0166] In a fourth embodiment disclosed herein includes, and in furtherance of any of the first to third embodiments, the control circuit is further configured to apply the overdrive voltage to all programmed memory cells in a third set of memory cells between the second set of memory cells and a second end of the unselected NAND string while applying a pre-charge voltage to the second end of the unselected NAND string.

[0167] In a fifth embodiment disclosed herein includes, and in furtherance of the third embodiment, the unselected NAND string further comprises a first non-data transistor between the first set of memory cells and the second set of memory cells. The unselected NAND string further comprises a second non-data transistor between the second set of memory cells and the third set of memory cells.

[0168] In a sixth embodiment disclosed herein includes, and in furtherance of any of the first to fifth embodiments, the control circuit is further configured to apply the bypass voltage to unprogrammed memory cells in the first set of memory cells while applying the pre-charge voltage to the first end of the unselected NAND string.

[0169] In a seventh embodiment disclosed herein includes, and in furtherance of any of the first to sixth embodiments, the control circuit is further configured to apply the bypass voltage to all programmed memory cells in the first set of memory cells while initially applying the pre-charge voltage to the first end of the unselected NAND string. The control circuit is further configured to increase the voltage to the programmed memory cells in the first set of memory cells from the bypass voltage to the overdrive voltage after the pre-charge voltage has stabilized on the first end of the unselected NAND string.

[0170] One embodiment includes a method comprising pre-charging a channel of an unselected NAND string and inhibiting programming of an unselected memory cell on the unselected NAND string. Pre-charging the channel of the unselected NAND string comprises: increasing a voltage at a first end of the unselected NAND string to a pre-charge voltage; increasing the voltage on programmed word lines in a first vertical sub-block between a first end of the unselected NAND string and a second vertical sub-block to an overdrive voltage after the voltage on the first end stabilizes at the pre-charge voltage; and applying a bypass voltage to unprogrammed word lines in the second vertical sub-block while the first end is at the pre-charge voltage, the unprogrammed word lines between the programmed word lines and a selected word line in the second vertical sub-block. Inhibiting programming of an unselected memory cell on the unselected NAND string comprises: boosting the voltage of the channel of the unselected NAND string after pre-charging the channel; and maintaining the channel of the unselected NAND string at a boosted voltage while applying a program voltage to the selected word line.

[0171] One embodiment includes a non-volatile storage device comprising: a plurality of NAND strings of memory cells, a plurality of word lines connected to the memory cells, and a control circuit. Each NAND string has a first set of data memory cells, a second set of data memory cells, a third set of data memory cells, a first non-data transistor between the first set and the second set of data memory cells, and a second non-data transistor between the second set and the third set of data memory cells. The word lines comprise a first set of data word lines connected to the first set of data memory cells, and a second set of data word lines connected to the second set of data memory cells. The control circuit is configured to apply an overdrive voltage to all programmed data word lines in the first set while applying a bypass voltage to the second set of data word lines and while applying a pre-charge voltage to a first end of an unselected NAND string to pre-charge a channel of an unselected memory cell on the unselected NAND string connected to a selected word line. The selected word line is in the second set of data word lines. The control circuit is further configured to boost a voltage of the channel of the unselected memory cell after pre-charging the channel. The control circuit is further configured to apply a program voltage to the selected word line while the channel voltage of the unselected memory cell is boosted.

[0172] For purposes of this document, reference in the specification to "an embodiment," "one embodiment," "some embodiments," or "another embodiment" may be used to describe different embodiments or the same embodiment.

[0173] For purposes of this document, a connection may be a direct connection or an indirect connection (e.g., via one or more others parts). In some cases, when an element is referred to as being connected or coupled to another ele-

ment, the element may be directly connected to the other element or indirectly connected to the other element via intervening elements. When an element is referred to as being directly connected to another element, then there are no intervening elements between the element and the other element. Two devices are "in communication" if they are directly or indirectly connected so that they can communicate electronic signals between them.

[0174] For purposes of this document, the term "based on" may be read as "based at least in part on."

[0175] For purposes of this document, without additional context, use of numerical terms such as a "first" object, a "second" object, and a "third" object may not imply an ordering of objects, but may instead be used for identification purposes to identify different objects.

[0176] For purposes of this document, the term "set" of objects may refer to a "set" of one or more of the objects.

[0177] The foregoing detailed description has been presented for purposes of illustration and description. It is not intended to be exhaustive or to limit to the precise form disclosed. Many modifications and variations are possible in light of the above teaching. The described embodiments were chosen in order to best explain the principles of the proposed technology and its practical application, to thereby enable others skilled in the art to best utilize it in various embodiments and with various modifications as are suited to the particular use contemplated. It is intended that the scope be defined by the claims appended hereto.

1. An apparatus, comprising:

a plurality of NAND strings of memory cells organized into an array, each NAND string having a first set of memory cells and a second set of memory cells, the first set between a first end of the NAND string and the second set; and

a control circuit configured to:

apply a pre-charge voltage to the first end of an unselected NAND string during a pre-charge phase of a programming operation of a selected memory cell on a selected NAND string;

apply an overdrive voltage to control gates of programmed memory cells of the first set while applying a bypass voltage to a control gate of an unprogrammed memory cell of the second set and while applying the pre-charge voltage to the first end such that the pre-charge voltage charges a channel coupled to an unselected memory cell on the unselected NAND string to the pre-charge voltage, the unprogrammed memory cell positioned between the first set of memory cells and the unselected memory cell; and

raise the voltage at the channel of the unselected memory cell from the pre-charge voltage to an inhibit voltage during a program phase of the programming operation which applies a program voltage to a control gate of the unselected memory cell and to a control gate of the selected memory cell.

2. The apparatus of claim **1**, wherein:

the apparatus further comprises a bit line connected to the first end of the unselected NAND string; and

the control circuit is configured to apply the pre-charge voltage to the bit line.

3. The apparatus of claim **1**, wherein:

the apparatus further comprises a source line connected to the first end of the unselected NAND string; and

the control circuit is configured to apply the pre-charge voltage to the source line.

4. The apparatus of claim **1**, wherein the control circuit is further configured to:

apply the overdrive voltage to control gates of all programmed memory cells in a third set of memory cells between the second set of memory cells and a second end of the unselected NAND string while applying a pre-charge voltage to the second end of the unselected NAND string.

5. The apparatus of claim **4**, wherein the unselected NAND string further comprises:

a first non-data transistor between the first set of memory cells and the second set of memory cells; and

a second non-data transistor between the second set of memory cells and the third set of memory cells.

6. The apparatus of claim **1**, wherein:

the control circuit is further configured to apply the bypass voltage to control gates of unprogrammed memory cells in the first set of memory cells while applying the pre-charge voltage to the first end of the unselected NAND string.

7. The apparatus of claim **1**, wherein the control circuit is further configured to:

apply the bypass voltage to the control gates of the programmed memory cells in the first set of memory cells while initially applying the pre-charge voltage to the first end of the unselected NAND string; and

increase the voltage to the control gates of the programmed memory cells in the first set of memory cells from the bypass voltage to the overdrive voltage after the pre-charge voltage has stabilized on the first end of the unselected NAND string.

8. A method comprising:

pre-charging a channel of an unselected NAND string that resides in a first vertical sub-block and a second vertical sub-block to a pre-charge voltage comprising:

increasing a voltage at a first end of the unselected NAND string to the pre-charge voltage;

increasing the voltage on programmed word lines in the first vertical sub-block between the first end of the unselected NAND string and the second vertical sub-block to an overdrive voltage after the voltage on the first end stabilizes at the pre-charge voltage; and

applying a bypass voltage to unprogrammed word lines in the second vertical sub-block while the first end is at the pre-charge voltage, the unprogrammed word lines between the programmed word lines and a selected word line in the second vertical sub-block; and

inhibiting programming of an unselected memory cell on the unselected NAND string comprising:

boosting the voltage of the channel of the unselected NAND string after pre-charging the channel to the pre-charge voltage; and

maintaining the channel of the unselected NAND string at a boosted voltage while applying a program voltage to the selected word line, wherein the unselected memory cell is connected to the selected word line.

9. The method of claim **8**, wherein applying the pre-charge voltage to the first end of the unselected NAND string comprises:

applying the pre-charge voltage to a bit line connected to a select transistor on the unselected NAND string.

10. The method of claim **8**, wherein applying the pre-charge voltage to the first end of the unselected NAND string comprises:

applying the pre-charge voltage to a source line connected to a select transistor on the unselected NAND string.

11. The method of claim **8**, further comprising:

turning on non-data transistors connected to a non-data word line between the first vertical sub-block and the second vertical sub-block while applying the pre-charge voltage to the first end of the unselected NAND string to allow the pre-charge voltage to pass to channels of memory cells of the unselected NAND in the second vertical sub-block.

12. The method of claim **8**, further comprising:

applying the bypass voltage on the programmed word lines in the first vertical sub-block while increasing the voltage at the first end of the unselected NAND string to the pre-charge voltage.

13. The method of claim **8**, further comprising:

applying the pre-charge voltage to a second end of the unselected NAND string; and

applying the overdrive voltage to all programmed word lines in a third vertical sub-block between the second end of the unselected NAND string and the second vertical sub-block after the pre-charge voltage on the second end of the unselected NAND string has stabilized to pass the pre-charge voltage from the second end to the channel of the unselected NAND string.

14. The method of claim **8**, further comprising:

applying the bypass voltage to unprogrammed word lines in the first vertical sub-block while applying the pre-charge voltage to the first end of the unselected NAND string.

15. A non-volatile storage device comprising:

a plurality of NAND strings of memory cells, each NAND string having a first set of data memory cells, a second set of data memory cells, a third set of data memory cells, a first non-data transistor between the first set of data memory cells and the second set of data memory cells, and a second non-data transistor between the second set of data memory cells and the third set of data memory cells;

a plurality of word lines connected to the plurality of NAND strings of memory cells, the word lines comprising a first set of data word lines connected to the first set of data memory cells, and a second set of data word lines connected to the second set of data memory cells; and

a control circuit configured to:

apply an overdrive voltage to all programmed data word lines in the first set of data word lines while applying a bypass voltage to the second set of data word lines and while applying a pre-charge voltage to a first end of an unselected NAND string to pre-charge a channel of an unselected memory cell on the unselected NAND string to the pre-charge voltage, wherein the unselected memory cell is connected to a selected word line, wherein the selected word line is in the second set of data word lines;

boost a voltage of the channel of the unselected memory cell to an inhibit voltage after pre-charging the channel to the pre-charge voltage; and

apply a program voltage to the selected word line while the channel voltage of the unselected memory cell is boosted to the inhibit voltage.

16. The non-volatile storage device of claim **15**, wherein the control circuit is further configured to:

turn on the first non-data transistor of the unselected NAND string while applying the pre-charge voltage to the first end of the unselected NAND string.

17. The non-volatile storage device of claim **15**, wherein:

the non-volatile storage device further comprises a bit line connected to the first end of the unselected NAND string; and

the control circuit is configured to apply the pre-charge voltage to bit line.

18. The non-volatile storage device of claim **15**, wherein:

the non-volatile storage device further comprises a source line connected to the first end of the unselected NAND string; and

the control circuit is configured to apply the pre-charge voltage to the source line.

19. The non-volatile storage device of claim **15**, wherein the control circuit is further configured to:

apply the bypass voltage to the data word lines in the first set having programmed memory cells while initially applying the pre-charge voltage to the first end of the unselected NAND string; and

increase the voltage on the data word lines in the first set of data word lines having programmed memory cells from the bypass voltage to the overdrive voltage after the pre-charge voltage to the first end of the unselected NAND string has stabilized.

20. The non-volatile storage device of claim **15**, wherein:

each NAND string further comprises a fourth set of data memory cells and a third non-data transistor, the third non-data transistor between the third set of data memory cells and the fourth set of data memory cells;

the plurality of word lines further comprise a third set of data word lines connected to the third set of data memory cells; and

the control circuit is further configured to:

apply the overdrive voltage to all programmed data word lines in the first set of data word lines and the second set of data word lines while applying the bypass voltage to the third set of data word lines and while applying the pre-charge voltage to the first end of the unselected NAND string to pre-charge a channel of an unselected memory cell on the unselected NAND string to the pre-charge voltage, wherein the unselected memory cell is connected to a selected word line in the third set of data word lines; and

apply a program voltage to the selected word line in the third set of data word lines after pre-charging the channel of the unselected memory cell.

* * * * *