Trials@uspto.gov
571-272-7822

Paper 35
Date: January 13, 2026

UNITED STATES PATENT AND TRADEMARK OFFICE

BEFORE THE PATENT TRIAL AND APPEAL BOARD

JUNIPER NETWORKS, INC.,
Petitioner,

v.

PORTSMOUTH NETWORK CORP.,
Patent Owner.

IPR2024-00913
Patent 8,014,394 B2[1]

Before ST. JOHN COURTENAY III, JUSTIN T. ARBES, and CHARLES J. BOUDREAU, *Administrative Patent Judges.*

ARBES, *Administrative Patent Judge*.

JUDGMENT
Final Written Decision
Determining Some Challenged Claims Unpatentable
35 U.S.C. § 318(a)

---

[1] IPR2024-00989 has been consolidated with IPR2024-00913.

I. INTRODUCTION

A. Background and Summary

Petitioner Juniper Networks, Inc. filed two Petitions, collectively requesting *inter partes* review of claims 1, 2, 4, 6–12, 14, and 16–18 of U.S. Patent No. 8,014,394 B2 (Ex. 1001, "the '394 patent") pursuant to 35 U.S.C. § 311(a), as listed in the following chart.[2]

Case Number	Challenged Claims	Petition
IPR2024-00913	1, 2, 4, 6, 7, 11, 12, 14, 16, 17	Paper 2 ("Pet.")
IPR2024-00989	8–10, 18	Paper 2 ("-989 Pet.")

On January 15, 2025, the Board instituted an *inter partes* review as to all challenged claims on all grounds of unpatentability asserted in the Petitions and exercised authority under 35 U.S.C. § 315(d) to consolidate the two proceedings and conduct them as one trial. Paper 8 ("Decision on Institution" or "Dec. on Inst."). Patent Owner Portsmouth Network Corp. filed a Patent Owner Response (Paper 20, "PO Resp."), Petitioner filed a Reply (Paper 26, "Reply"), and Patent Owner filed a Sur-Reply (Paper 30, "Sur-Reply"). An oral hearing was held on October 16, 2025, and a transcript of the hearing is included in the record (Paper 34, "Tr.").

We have jurisdiction under 35 U.S.C. § 6. This Final Written Decision is issued pursuant to 35 U.S.C. § 318(a). For the reasons that follow, we determine that Petitioner has shown, by a preponderance of the evidence, that claims 1, 2, 4, 6, 7, 11, 12, 14, 16, and 17 of the '394 patent are unpatentable but has not shown, by a preponderance of the evidence, that

[2] Unless otherwise noted, references herein are to the exhibits filed in IPR2024-00913.

claims 8–10 and 18 of the ’394 patent are unpatentable based on the asserted grounds in this proceeding.

B. Related Matters

1. District Court Cases

The parties indicate that the ’394 patent was the subject of *Portsmouth Network Corp. v. Cisco Systems, Inc.*, No. 23-cv-00441 (E.D. Tex.), which has been dismissed, and is the subject of *Portsmouth Network Corp. v. Juniper Networks, Inc.*, 23-cv-12201 (D. Mass), which has been stayed. *See* Pet. 5; Paper 22, 2.

2. Inter Partes *Review Proceedings*

Petitioner filed a petition challenging another patent asserted in the district court cases in IPR2024-00893 (instituted).

A different petitioner, Cisco Systems, Inc. (“Cisco”), filed a petition challenging claims 1, 2, 4–12, and 14–18 of the ’394 patent in IPR2024-00506 (“the Cisco IPR”). On October 1, 2025, the Board issued a final written decision in the Cisco IPR determining that claims 1, 2, 4–12, and 14–18 of the ’394 patent are unpatentable. IPR2024-00506, Paper 38. On December 3, 2025, Patent Owner appealed the Board’s decision to the U.S. Court of Appeals for the Federal Circuit. IPR2024-00506, Paper 39. That appeal is currently pending.

Cisco also filed petitions challenging other patents asserted in the district court cases in IPR2024-00503 (instituted), IPR2024-00505 (instituted), IPR2024-00954 (denied), and IPR2024-01450 (instituted).

3. Reexamination

The ’394 patent was the subject of an *ex parte* reexamination, Control No. 90/019,441, in which the Office issued a reexamination certificate confirming claims 1–18 on July 14, 2025.

In this proceeding, the parties address one document filed in the reexamination, a declaration from Patent Owner’s expert (Ex. 1027), who also submitted a declaration in this proceeding (Ex. 2005). *See* Reply 1, 3–5, 10; Sur-Reply 2, 8. The parties do not otherwise discuss the reexamination in their papers. Also, in a General Order entered on September 19, 2025, the parties were ordered to

> keep the Board apprised of developments regarding adjudication of validity or patentability of the challenged patent claims, or substantially similar patent claims, such as claim construction, findings of fact, or conclusions of law, in “any other judicial or administrative matter that would affect, or be affected by, a decision in the proceeding” and is identified as a related matter under 37 C.F.R. § 42.8(b)(2).

Paper 31, 1–2. Neither party requested a conference call or sought to file any additional documents or submit any additional briefing following the General Order. *See id.* at 2 (ordering that, “after Board consultation, the parties shall file in the docket of this proceeding relevant materials from the related matter(s)”).

We have reviewed the record of the reexamination. The request for reexamination, filed on March 5, 2024, involved five prior art references (identified as Naik, Reader, Deng, Ramanathan, and Schulter) which are different than the prior art references asserted in this consolidated proceeding (Blease, Weyman, Deng, and Rao). *See* Ex. 1019, 16. We note the “Deng” reference asserted in this proceeding (Ex. 1008) is a continuation

of the "Deng" reference at issue in the reexamination (U.S. Patent Application Publication No. 2005/0232272 A1). *See* Pet. 71 n.23; -989 Pet. 72 n.22. Hu was identified as a secondary reference in the reexamination request and is asserted by Petitioner as a secondary reference in this proceeding. The sole Office Action in the reexamination rejecting claims 1–18, dated December 17, 2024, involved only the prior art submitted with the request for reexamination.

Patent Owner filed Information Disclosure Statements on June 18, 2024, and March 25, 2025, identifying over 180 documents. Certain papers and exhibits from the Cisco IPR and this proceeding (including the asserted references) were identified, but it does not appear that any of those materials, including the references that we have considered in this proceeding (other than Hu), were cited or relied upon by the Examiner during the reexamination.

The Examiner ultimately determined, in a Notice of Intent to Issue Ex Parte Reexamination Certificate dated May 8, 2025, that

> [t]he combination of limitations presented in the independent claims of the '394 patent . . . describes and claims a router with a distributed architecture, which, among other things, requires its line card processing units: *(1) store a list indicating all multicast packet streams that are permitted for forwarding by the router; and (2) distribute any received client request to all other processing units in the router*. The '394 patent claims require that the line card processing units perform both tasks which is performed using a processor on each line card that do the processing to handle incoming multicast packets using a distributed router architecture. The patentability of all reexamined claims are confirmed because of the distributed network of the '394 patent in contrast to the centralized system of Naik which additionally does not disclose "storing in each processing unit a respective list, each list indicating all of one or more multicast packet streams that are permitted for forwarding

> by the network element." The examiner acknowledges the 3/17/2025 Oliver Declaration that discloses that Naik's route processors cannot be used to satisfy the '394 patent limitations assigned to the line card processing unit. Accordingly the claims are confirmed based on the distributed processing network of the '394 patent and that the prior art references do not disclose "storing in each processing unit a respective list, each list indicating all of one or more multicast packet streams that are permitted for forwarding by the network element."

The Examiner thus referenced two limitations of the '394 patent's independent claims: (1) limitations pertaining to "storing" lists (identified as limitations 1[b], 8[b], 11[b.v], and 18[b.v] in this proceeding), and (2) limitations pertaining to "distributing" a request (identified as limitations 1[d], 8[d], 11[b.vii.α], and 18[c.i] in this proceeding). As explained below, we find those limitations in claims 1 and 11 are taught by the combination of Blease and Weyman, neither of which were part of the request for reexamination. *See infra* Sections II.D.4.d–e, II.D.5; Pet. 37–44, 58–59.

Given the above differences between this proceeding and the reexamination, we conclude that a different outcome as to certain claims is warranted. For the reasons set forth herein, we find Petitioner has met its burden to prove, by a preponderance of the evidence, that claims 1, 2, 4, 6, 7, 11, 12, 14, 16, and 17 of the '394 patent are unpatentable, but has not done so with respect to claims 8–10 and 18 based on the asserted grounds in this proceeding.

C. The '394 Patent

The '394 patent, titled "High-Speed Processing of Multicast Content Requests," issued September 6, 2011, from U.S. Patent Application No. 12/369,011, filed on February 11, 2009. Ex. 1001, codes (21), (22),

(45), (54). The '394 patent relates to delivery of multicast traffic streams over a communication network through a "network element." *Id.* at code (57). The goal of the '394 patent is to enable the fast delivery of multicast content with minimal latency for processing events associated with changing the multicast forwarding configuration. *Id.* at col. 4, ll. 58–62.

More specifically, the '394 patent describes:

> Some multicast content applications are highly sensitive to the response time to changes in the forwarding configuration. For example, in an Internet Protocol Television (IPTV) application, when a user switches ("zaps") from one television channel to another, the user's set-top box initiates a process of stopping to receive one multicast packet stream and starting to receive another multicast stream. The zapping time, i.e., the time from the moment the user switches the channel in his or her set-top box until the new channel is displayed, is determined by the time needed by the network to apply this forwarding change. Fast zapping time is particularly difficult to achieve when the rate of change requests is high, such as during a commercial break in which a large number of users switch channels almost simultaneously.
>
> Embodiments of the present invention provide improved methods and systems for performing selective multicast forwarding in packet networks. The disclosed methods and systems are particularly effective in adapting rapidly to requests to change the multicast forwarding configuration.

Ex. 1001, col. 4, ll. 44–62.

The network element described in the '394 patent to accomplish this is illustrated in Figure 1, which is reproduced below.

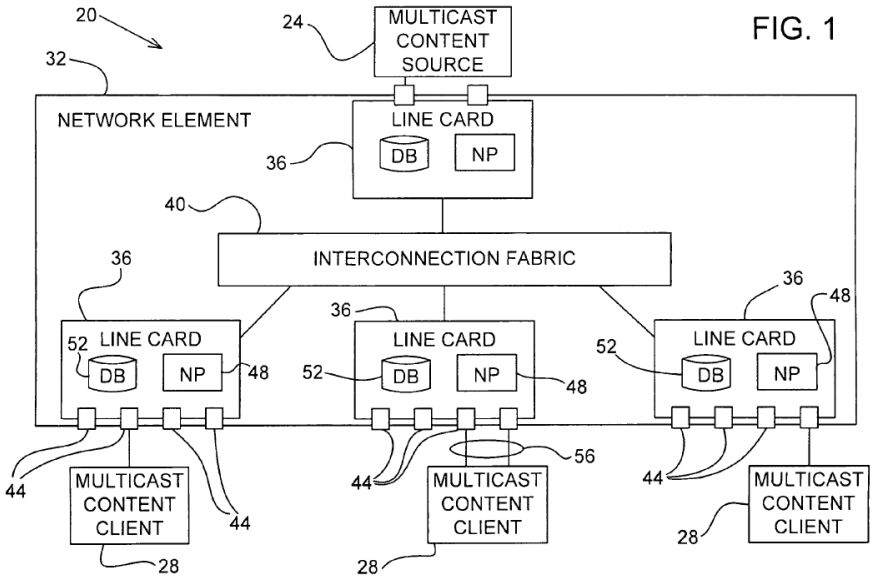

Figure 1 shows network element 32, which processes communication packets received on its ports 44 from packet network 20. Ex. 1001, col. 5, ll. 57–64. The network element has line cards 36, each of which has a network processor (NP) 48, a database 52, and ports 44. *Id.* at col. 6, ll. 23–46. "The line cards are interconnected by an interconnection switch fabric 40." *Id.* at col. 6, ll. 24–25. Once packets are received on a port in a line card, the corresponding network processor 48 responsible for that port processes them. *Id.* at col. 6, ll. 32–35. "Each line card 36 further comprises a filtering database 52, which holds a list of multicast streams that are permitted for forwarding by the network element . . . ." *Id.* at col. 6, ll. 35–38.

Figure 1 also shows a multicast content source 24, such as live IP Television (IPTV), connected to the top line card through its left port. Ex. 1001, col. 5, l. 64–col. 6, l. 3. Three multicast content clients 28 are shown on the bottom of Figure 1, one connected to each of the bottom three

line cards. *Id.* at col. 6, ll. 4–6. "In an IPTV application, the multicast clients may comprise set-top boxes." *Id.* at col. 6, ll. 15–17. For some multicast streams, "two or more ports 44 are aggregated to form a high-capacity port 56, in order to provide high traffic capacity and redundancy to a certain content client or content source." *Id.* at col. 6, ll. 61–64. A common communication protocol used to broadcast and receive multicast streams is Internet Group Management Protocol (IGMP). *Id.* at col. 1, ll. 21–24.

"In order to avoid unnecessary congestion and processing load, network element 32 forwards multicast streams from source 24 to clients 28 selectively, rather than flooding . . . all ports." Ex. 1001, col. 7, ll. 10–13. "For this purpose, filtering database 52 in each line card 36 holds a list of multicast streams, which are permitted for forwarding by the network element." *Id.* at col. 7, ll. 13–16. "[T]he filtering databases also indicate the specific port or ports to which each permitted multicast stream is to be forwarded." *Id.* at col. 7, ll. 16–18. "When the network element receives a given multicast stream from source 24, NP 48 in a given line card 36 forwards this stream to the designated ports only if the stream appears in its filtering database." *Id.* at col. 7, ll. 18–21.

"The filtering databases in the different line cards are updated by monitoring request messages, which are sent by the multicast clients in order to start or stop receiving certain multicast content." Ex. 1001, col. 7, ll. 23–26.

Figure 2, which shows how the databases are updated when a request for new multicast content is received, is reproduced below.

FIG. 2

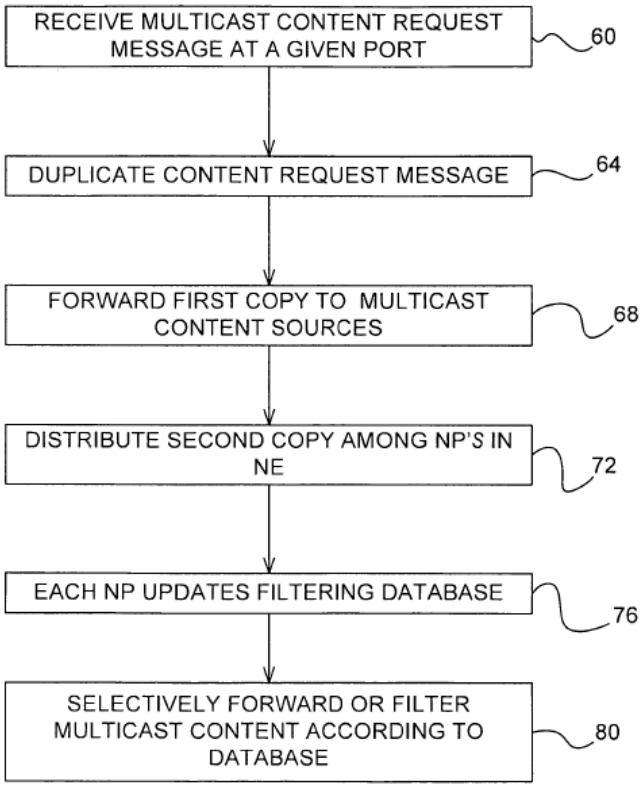

Figure 2 "is a flow chart that schematically illustrates a method for updating databases 52 based on multicast content requests." Ex. 1001, col. 7, ll. 27–29. As shown on the top of the flowchart, "network element 32 receive[s] a multicast content request message, at a request reception step 60." *Id.* at col. 7, ll. 30–32. "The request is sent from a given multicast client 28, is addressed to a certain multicast source and arrives at one or ports 44 of the network element." *Id.* at col. 7, ll. 34–36. "The multicast content request may comprise, for example, a request to join a certain multicast service (i.e., to start receiving certain multicast content) or to leave a certain multicast service (i.e., to stop receiving certain multicast content)."

Id. at col. 7, ll. 40–43. "For example, in an IPTV application, when a multicast client 28 (e.g., a set-top box) switches ('zaps') from one television channel to another, the client sends a request to stop receiving the content of the previous channel and to start receiving the content of the new channel." *Id.* at col. 7, ll. 46–50.

Next, step 64 in the flowchart shows that the "line card duplicates the request." Ex. 1001, col. 7, ll. 53–54. In step 68, "[t]he first copy of the request is forwarded to the appropriate multicast sources." *Id.* at col. 7, ll. 54–56. At step 72, a "second copy of the request is forwarded to all the NPs in the network element." *Id.* at col. 7, ll. 56–58. At step 76, "[e]ach NP receiving the distributed copy updates its respective database 52." *Id.* at col. 7, ll. 63–65. "[T]he distributed copy comprises an indication of the ingress port, i.e., the port via which the request arrived at the network element." *Id.* at col. 8, ll. 3–5. "If the request comprises a request to receive a certain multicast stream, the NPs update their filtering databases to permit forwarding of the requested multicast stream. . . . to [the ingress] port [of the request]." *Id.* at col. 8, ll. 9–18. "If the request comprises a request to stop receiving a certain multicast stream, the NPs remove the corresponding entry from their filtering databases." *Id.* at col. 8, ll. 22–24. Finally, at step 80, "[t]he network element selectively forwards incoming multicast streams in accordance with the updated filtering databases," i.e., by sending them out of the ingress port where the request came from, which is now stored in the filtering databases. *Id.* at col. 8, ll. 25–27.

The '394 patent also describes how limits can be placed on the number of streams allowed on a given port. Ex. 1001, col. 8, ll. 36–59. "In some embodiments, the network element allows only a limited number of multicast streams to be forwarded over any given port, so as not to exceed

the maximum bandwidths of the ports. For example, a maximum allowed number of multicast streams may be set to each port." *Id.* at col. 8, ll. 36–40. "In these embodiments, filtering databases 52 hold port counters, which are indicative of the number of multicast streams that are permitted for forwarding over each port . . . ." *Id.* at col. 8, ll. 41–45.

> Typically, the port counter of a given port is initialized to the maximum allowed number of [multicast streams]. The counter is decremented when a new multicast stream is permitted for forwarding to the port, and is incremented when an existing multicast stream is removed from the port. Thus, a port counter that is equal to zero indicates that the maximum allowed number of streams have already been permitted for this port.

Id. at col. 8, ll. 51–58.

D. Illustrative Claims

Challenged claims 1, 8, 11, and 18 of the '394 patent are independent. Claims 2, 4, 6, and 7 depend from claim 1, claims 9 and 10 depend from claim 8, and claims 12, 14, 16, and 17 depend from claim 11. Claims 1 and 8 recite (with letter designations used in the Petition to refer to the various limitations):

> 1. A method for communication, comprising:
>
> [a.i] operating a network element, wherein the network element further comprises multiple interconnected processing units and multiple ports, [a.ii] wherein each processing unit is assigned to a different subset of the multiple ports of the network element, and wherein each processing unit contains a processor for processing packets communicated over the different subset of the multiple ports to which the processing unit is assigned;
>
> [b] storing in each processing unit a respective list, each list indicating all of one or more multicast packet streams that are permitted for forwarding by the network element, and further

indicating which of the one or more ports each multicast packet stream is permitted to be forwarded to;

[c] receiving from a client a request relating to reception of a given multicast packet stream;

[d] distributing the request among the multiple processing units within the network element, and updating the respective list in each processing unit responsively to the request; and

[e] selectively forwarding multicast packets associated with the given multicast packet stream by the processing units in accordance with the respective updated lists,

[f] wherein operating the network element comprises aggregating two or more of the ports to form a high-capacity port, and

[g.i] wherein aggregating the ports comprises setting an upper limit on a number of the multicast packet streams that are permitted for forwarding over the high-capacity port, [g.ii] wherein the request indicates that the given multicast packet stream is to be forwarded over the high-capacity port, and [g.iii] wherein updating the list comprises modifying the list to indicate that the given multicast packet stream is permitted for forwarding over the high-capacity port only when the number of the multicast packet streams that are permitted for forwarding over the high-capacity port, including the given multicast packet stream, does not exceed the upper limit.

8. A method for communication, comprising:

[a.i] operating a network element, wherein the network element further comprises multiple interconnected processing units and multiple ports, [a.ii] wherein each processing unit is assigned to a different subset of the multiple ports of the network element, and wherein each processing unit contains a processor for processing packets communicated over the different subset of the multiple ports to which the processing unit is assigned;

[b] storing in each processing unit a respective list, each list indicating all of one or more multicast packet streams that are permitted for forwarding by the network element, and further indicating which of the one or more ports each multicast packet stream is permitted to be forwarded to;

[c] receiving from a client a request relating to reception of a given multicast packet stream;

[d] distributing the request among the multiple processing units within the network element, and updating the respective list in each processing unit responsively to the request; and

[e] selectively forwarding multicast packets associated with the given multicast packet stream by the processing units in accordance with the respective updated lists,

[f.i] wherein operating the network element comprises initializing a new processing unit added to the network element by:

[f.ii] deactivating the ports to which the new processing unit is assigned;

while the ports to which the new processing unit is assigned are deactivated, sending a multicast status request, receiving multicast membership reports sent by multicast clients in response to the multicast status request, constructing the list by the new processing unit based on the received multicast membership reports; and

after constructing the list, activating the ports to which the new processing unit is assigned.

E. Evidence

The pending grounds of unpatentability in the instant *inter partes* review are based on the following prior art:

U.S. Patent No. 7,983,205 B1, filed Feb. 28, 2005, issued July 19, 2011 (Ex. 1005, "Blease");

U.S. Patent No. 8,068,416 B2, filed Sept. 20, 2007, issued Nov. 29, 2011 (Ex. 1007, "Hu");

U.S. Patent No. 8,102,848 B1, filed Nov. 19, 2008, issued Jan. 24, 2012 (Ex. 1024, "Rao");

U.S. Patent Application Publication No. 2005/0041665 A1, published Feb. 24, 2005 (Ex. 1006, "Weyman"); and

U.S. Patent Application Publication No. 2009/0290585 A1, filed Aug. 4, 2009, published Nov. 26, 2009, continuation of application filed June 15, 2005 (Ex. 1008, "Deng").

Petitioner filed declarations from Tal Lavian, Ph.D. (Exs. 1003, 1103) with its Petitions. Patent Owner filed a declaration from James Olivier, Ph.D. (Ex. 2005) with its Response. Also submitted as evidence is the transcript of the deposition of Dr. Olivier (Ex. 1026).

F. Asserted Grounds

Petitioner asserts that claims 1, 2, 4, 6–12, 14, and 16–18 of the '394 patent would have been obvious on the basis of prior art patents and printed publications under 35 U.S.C. § 103(a):[3]

Petition	Claim(s) Challenged	35 U.S.C. §	References/Basis
IPR2024-00913	1, 2, 4, 6, 7, 11, 12, 14, 17	103(a)	Blease, Weyman, Hu
IPR2024-00913	16	103(a)	Blease, Weyman, Hu, Deng
IPR2024-00989	8, 18	103(a)	Blease, Weyman
IPR2024-00989	9	103(a)	Blease, Weyman, Hu
IPR2024-00989	10	103(a)	Blease, Weyman, Deng[4]

[3] The Leahy-Smith America Invents Act, Pub. L. No. 112-29, 125 Stat. 284 (2011) ("AIA"), amended 35 U.S.C. § 103. Because the challenged claims of the '394 patent have an effective filing date before the effective date of the applicable AIA amendment, we refer to the pre-AIA version of 35 U.S.C. § 103. *See* Ex. 1001, code (22).

[4] Petitioner lists an asserted ground as based on "Blease in view of Weyman and Deng" (-989 Pet. 7), but lists "Blease, Weyman, Hu, and Deng" (*id.* at 58) and "Blease in view of Chen, Hu, and Deng" (*id.* at 60) in the headings for the applicable section of the Petition. We understand the section

Petition	Claim(s) Challenged	35 U.S.C. §	References/Basis
IPR2024-00989	8, 18	103(a)	Blease, Weyman, Rao
IPR2024-00989	9	103(a)	Blease, Weyman, Rao, Hu
IPR2024-00989	10	103(a)	Blease, Weyman, Rao, Deng

II. ANALYSIS

A. Level of Ordinary Skill in the Art

In determining the level of ordinary skill in the art for a challenged patent, we look to "1) the types of problems encountered in the art; 2) the prior art solutions to those problems; 3) the rapidity with which innovations are made; 4) the sophistication of the technology; and 5) the educational level of active workers in the field." *Ruiz v. A.B. Chance Co.*, 234 F.3d 654, 666–67 (Fed. Cir. 2000). "Not all such factors may be present in every case, and one or more of them may predominate." *Id.* at 667.

Petitioner argues that at the time of the application for the '394 patent (February 2009), a person of ordinary skill in the art would have had "a bachelor's degree in computer science, computer or electrical engineering, or a related field, and approximately two or more years of experience in computer and networking technology," where "[e]ducation could substitute for professional experience, and vice versa." Pet. 13 (citing Ex. 1003 ¶¶ 74–82); -989 Pet. 13. In the Decision on Institution, the Board agreed with and applied Petitioner's proposed definition. Dec. on Inst.

---

headings to be typographical errors, as Petitioner's substantive arguments refer to modifying "the system of Blease and Weyman" based on Deng. *See id.* at 58–62.

20–21. Patent Owner uses Petitioner's proposed definition for its Response. PO Resp. 8. Neither party made any further argument regarding the level of ordinary skill in the art in its papers during trial.

In the Cisco IPR, we adopted a similar definition, determining that a person of ordinary skill in the art would have had "a bachelor's degree in computer science, computer engineering, electrical engineering, or an equivalent field, or approximately two years of experience working in the field of information technology and networking," where "[l]ack of professional experience can be substituted by additional education, and vice versa." IPR2024-00506, Paper 38 at 16 (alteration in original). Based on the full record developed during trial, including our review of the '394 patent and the types of problems and solutions described in the '394 patent and cited prior art, we adopt the same definition of the level of ordinary skill in the art as the Cisco IPR and apply it for purposes of this Decision, but note that our decision would be the same even applying Petitioner's similar proposed definition in this proceeding.

B. Claim Interpretation

We interpret the claims of the challenged patent

> using the same claim construction standard that would be used to construe the [claims] in a civil action under 35 U.S.C. 282(b), including construing the [claims] in accordance with the ordinary and customary meaning of such [claims] as understood by one of ordinary skill in the art and the prosecution history pertaining to the patent.

37 C.F.R. § 42.100(b). Petitioner asserts that the claim terms should be given their "ordinary and customary meaning as understood by a [person of ordinary skill in the art] in light of the specification and prosecution history,"

but does not propose any express interpretations. Pet. 13; -989 Pet. 13. Patent Owner similarly states that it "appl[ies] the ordinary and customary meaning to the '394 [p]atent's claim terms" and "does not provide any specific claim constructions." PO Resp. 7–8. The Board did not interpret any terms in the Decision on Institution or in the Cisco IPR. *See* Dec. on Inst. 21; IPR2024-00506, Paper 38 at 16–17. We conclude, based on the full trial record, that no term requires express interpretation to determine whether Petitioner has met its burden to prove unpatentability of the challenged claims. *See Nidec Motor Corp. v. Zhongshan Broad Ocean Motor Co.*, 868 F.3d 1013, 1017 (Fed. Cir. 2017) ("Because we need only construe terms 'that are in controversy, and *only to the extent necessary* to resolve the controversy,' we need not construe [a particular claim limitation] where the construction is not 'material to the . . . dispute.'" (emphasis added) (citation omitted)).

C. Legal Standards

To prevail in its challenge to the patentability of claims 1, 2, 4, 6–12, 14, and 16–18 of the '394 patent, Petitioner must demonstrate that the claims are unpatentable by a preponderance of the evidence. 35 U.S.C. § 316(e). "In an [*inter partes* review], the petitioner has the burden from the onset to show with particularity why the patent it challenges is unpatentable." *Harmonic Inc. v. Avid Tech., Inc.*, 815 F.3d 1356, 1363 (Fed. Cir. 2016). This burden of persuasion never shifts to Patent Owner. *Dynamic Drinkware, LLC v. Nat'l Graphics, Inc.*, 800 F.3d 1375, 1378 (Fed. Cir. 2015); *see also In re Magnum Oil Tools Int'l, Ltd.*, 829 F.3d 1364, 1376 (Fed. Cir. 2016) ("Where, as here, the only question presented is whether

due consideration of the four *Graham* factors renders a claim or claims obvious, no burden shifts from the patent challenger to the patentee.”).

A claim is unpatentable for obviousness if, to one of ordinary skill in the pertinent art, “the differences between the subject matter sought to be patented and the prior art are such that the subject matter as a whole would have been obvious at the time the invention was made.” *KSR Int’l Co. v. Teleflex Inc.*, 550 U.S. 398, 406 (2007) (quoting 35 U.S.C. § 103(a)). The question of obviousness is resolved on the basis of underlying factual determinations, including “the scope and content of the prior art”; “differences between the prior art and the claims at issue”; and “the level of ordinary skill in the pertinent art.” *Graham v. John Deere Co.*, 383 U.S. 1, 17–18 (1966). Additionally, objective indicia of nonobviousness, such as “commercial success, long felt but unsolved needs, failure of others, etc., might be utilized to give light to the circumstances surrounding the origin of the subject matter sought to be patented. As indicia of obviousness or nonobviousness, these inquiries may have relevancy.”[5] *Id.* When conducting an obviousness analysis, we consider a prior art reference “not only for what it expressly teaches, but also for what it fairly suggests.” *Bradium Techs. LLC v. Iancu*, 923 F.3d 1032, 1049 (Fed. Cir. 2019).

A patent claim “is not proved obvious merely by demonstrating that each of its elements was, independently, known in the prior art.” *KSR*, 550 U.S. at 418. An obviousness determination based on a combination of references requires finding “both ‘that a skilled artisan would have been motivated to combine the teachings of the prior art references to achieve the

[5] Patent Owner does not present any evidence of objective indicia of nonobviousness in this proceeding.

claimed invention, and that the skilled artisan would have had a reasonable expectation of success in doing so.'" *Intelligent Bio-Sys., Inc. v. Illumina Cambridge Ltd.*, 821 F.3d 1359, 1367–68 (Fed. Cir. 2016) (quoting *Kinetic Concepts, Inc. v. Smith & Nephew, Inc.*, 688 F.3d 1342, 1360 (Fed. Cir. 2012)); *see KSR*, 550 U.S. at 418 (for an obviousness analysis, "it can be important to identify a reason that would have prompted a person of ordinary skill in the relevant field to combine the elements in the way the claimed new invention does").

"Although the *KSR* test is flexible, the Board 'must still be careful not to allow hindsight reconstruction of references . . . without any explanation as to *how* or *why* the references would be combined to produce the claimed invention.'" *TriVascular, Inc. v. Samuels*, 812 F.3d 1056, 1066 (Fed. Cir. 2016) (quoting *Kinetic Concepts*, 688 F.3d at 1368) (alteration in original). Further, an assertion of obviousness "cannot be sustained by mere conclusory statements; instead, there must be some articulated reasoning with some rational underpinning to support the legal conclusion of obviousness." *KSR*, 550 U.S. at 418 (quoting *In re Kahn*, 441 F.3d 977, 988 (Fed. Cir. 2006)); *accord In re NuVasive, Inc.*, 842 F.3d 1376, 1383 (Fed. Cir. 2016) (stating that "conclusory statements" amount to an "insufficient articulation[] of motivation to combine"; "instead, the finding must be supported by a 'reasoned explanation'" (quoting *In re Lee*, 277 F.3d 1338, 1342 (Fed. Cir. 2002))); *Magnum Oil*, 829 F.3d at 1380 ("To satisfy its burden of proving obviousness, a petitioner cannot employ mere conclusory statements. The petitioner must instead articulate specific reasoning, based on evidence of record, to support the legal conclusion of obviousness.").

D. Obviousness Ground Based on Blease, Weyman, and Hu (Claims 1, 2, 4, 6, 7, 11, 12, 14, and 17)

1. Blease

Blease is a U.S. patent titled "Outgoing Interface Mapping for Multicast Traffic." Ex. 1005, code (54). Similar to the '394 patent, Blease describes a "network device [that] transmits multicast traffic to . . . subscriber devices." *Id.* at code (57).

> In particular, the network device may receive membership requests for a multicast group from the subscriber devices via the network switch on a first interface, i.e., a mapping interface. The network device sends a multicast stream associated with the multicast group to the network switch on a second interface, i.e. an outgoing interface (OIF). Upon receiving a membership request, the network device maps the membership request to an OIF dedicated to the multicast group. In this way, when multiple subscriber devices connected to the same switch request the same multicast stream, each membership request will map to the same OIF. The network device sends one copy of the multicast stream to the network switch on the dedicated OIF.

Id.

Figure 1 of Blease is reproduced below.

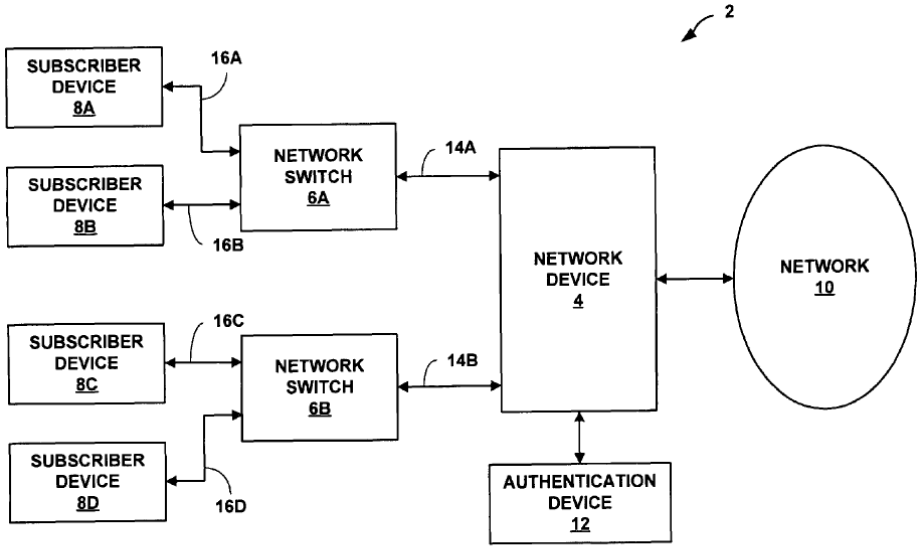

FIG. 1

Figure 1 depicts network device 4, which provides multicast traffic (e.g., IPTV) from network 10 to subscriber devices 8A–8D, via network switches 6A and 6B. Ex. 1005, col. 3, ll. 43–55. "Subscriber devices 8 request multicast streams, e.g., IPTV channels, by sending a membership request for a specific multicast group to network device 4" (e.g., using IGMP). *Id.* at col. 3, ll. 55–61.

> When network device 4 receives membership requests from subscriber device 8A and subscriber device 8B for the same multicast group, network device 4 maps both membership requests to the same OIF. Network device 4 then sends one copy of the multicast stream to network switch 6A on the mapped OIF. Network switch 6A replicates and forwards the multicast stream to subscriber device 8A and subscriber device 8B.

Id. at col. 4, ll. 10–17.

Figure 4 of Blease shows an example of such a network device, described as a router, and is set forth below.

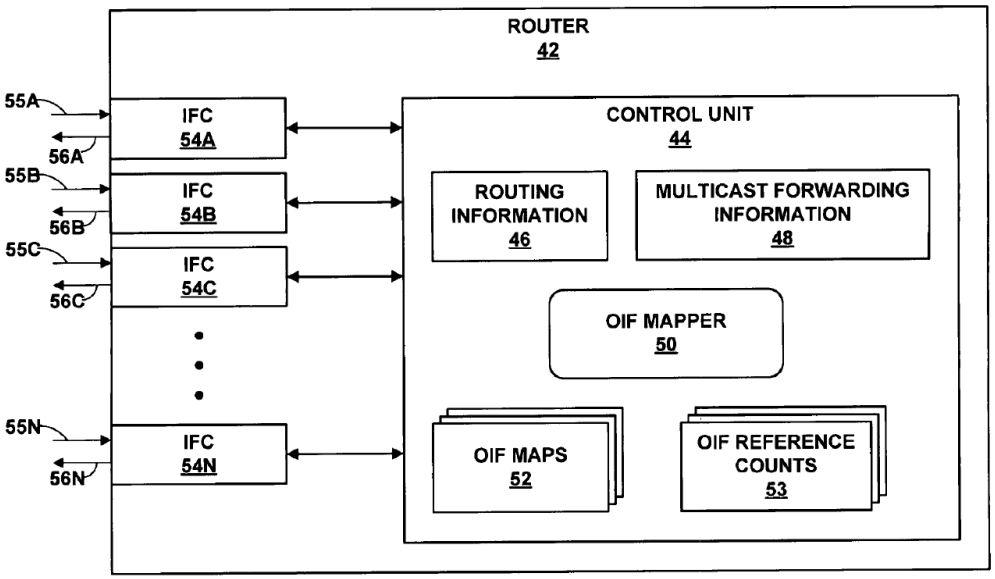

FIG. 4

Figure 4 shows "a block diagram illustrating an exemplary router 42," which "may operate substantially similar to network device 4" in Figure 1.

Ex. 1005, col. 8, ll. 39–43. "Router 42 may provide subscriber devices access to a network . . . ." *Id.* at col. 8, ll. 43–44. "In general, router 42 is capable of receiving membership requests for multicast groups on a first interface and sending multicast streams associated with the multicast groups on a second interface that may be dedicated to a network switch servicing the subscriber device from which the requests may be received." *Id.* at col. 8, ll. 46–52.

Blease describes how this is accomplished, stating that "[a]fter control unit 44 authenticates the user information, an interface profile is created which may contain access filters to permit or deny the subscriber device from requesting certain multicast groups." Ex. 1005, col. 9, ll. 11–14. "For example, the subscriber device may comprise a set-top box for IPTV. In that case, the requested multicast group . . . comprises an IPTV channel that a subscriber wants to receive." *Id.* at col. 9, ll. 14–17. "[R]outer 42 receives a membership request for a multicast group from a subscriber device via a network switch on an interface of one of IFCs 54." *Id.* at col. 10, ll. 6–8. "OIF mapper 50 is capable of interfacing with the [multicast protocol] used to signal the membership request." *Id.* at col. 10, ll. 14–15. "OIF mapper 50 identifies which of OIF maps 52 is configured for the mapping interface." *Id.* at col. 10, ll. 20–22.

> When the membership request matches an entry in the identified one of OIF maps 52, OIF mapper 50 maps the membership request to the OIF given in the identified OIF map. In this way, when two or more subscriber devices connected to the same network switch and request the same multicast stream, OIF mapper 50 maps both of the membership requests to the same OIF. If the identified one of OIF maps 52 contains no entries or if the OIF map configured for the mapping interface does not exist, OIF mapper 50 does not map any membership requests.

Id. at col. 10, ll. 39–48.

Once the mapping is finished, "OIF mapper 50 then accesses multicast forwarding information 48." Ex. 1005, col. 10, ll. 49–50. "Multicast forwarding information 48 controls replication and forwarding of multicast packets to subscriber devices." *Id.* at col. 10, ll. 50–52. "Control unit 44 updates multicast forwarding information 48 based on messages received from the subscriber devices that indicate a desire to join or leave multicast groups, i.e., to receive or stop receiving multicast streams." *Id.* at col. 10, ll. 52–55.

"In response to a join request, OIF mapper 50 determines whether multicast forwarding information 48 indicates [whether the stream] is currently forwarded to the network switch, i.e., whether another subscriber device connected to the same network switch is currently receiving the requested multicast stream." Ex. 1005, col. 10, ll. 55–61. If it is not, then "OIF mapper 50 adds the mapped OIF to multicast forwarding information 48" and "initializes the one of OIF reference counts 53 associated with the mapped OIF." *Id.* at col. 10, ll. 62–67. "If the multicast is already forwarded to the network switch, the entry in multicast forwarding information 48 remains unchanged. OIF mapper 50 increments a corresponding one of OIF reference counts 53 . . . ." *Id.* at col. 10, l. 67–col. 11, l. 4. "In this manner, OIF reference counts 53 keep track of the number of subscriber devices currently receiving the associated multicast streams for each OIF." *Id.* at col. 11, ll. 5–6.

Once the membership is established, "[w]hen router 42 receives a multicast packet via one of inbound links 55, control unit 44 forwards the packet on a set of outbound links 56 in accordance with multicast forwarding information 48." Ex. 1005, col. 8, ll. 64–67.

Blease also states that a server application using the invention "may aggregate output from switches" into "a higher-speed uplink" to the network device. Ex. 1005, col. 4, ll. 24–26.

2. Weyman

Weyman is a published U.S. patent application titled "System and Method for Distributed Multicast Routing." Ex. 1006, code (54). Similar to the '394 patent, Weyman describes a "distributed router composed of individual units" that "appears to be a single network entity" for communicating multicast packets. *Id.* at code (57).

Figure 5 in Weyman illustrates a distributed router with multiple units and is reproduced below.

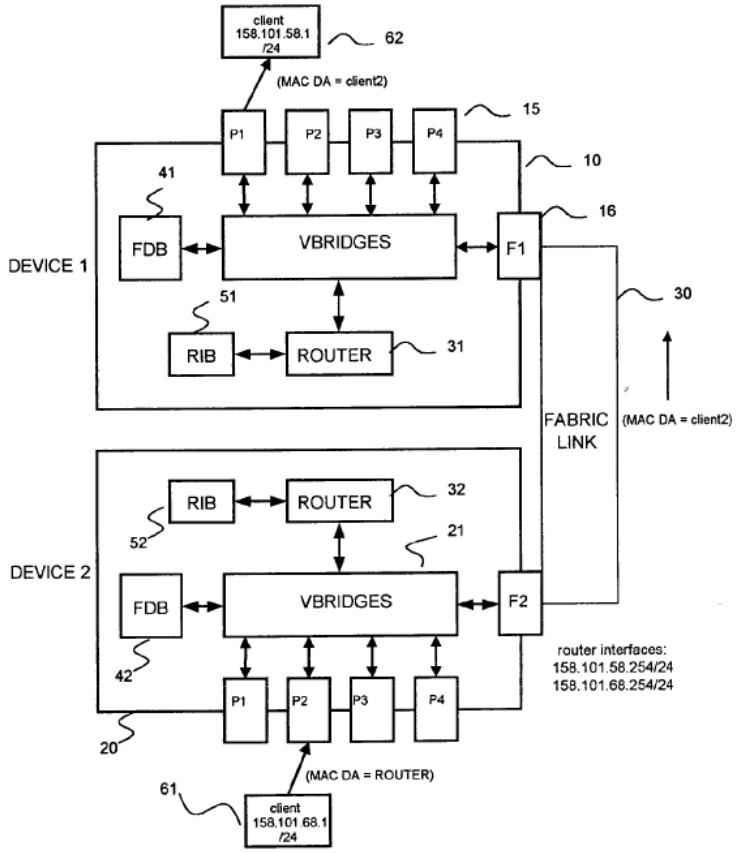

FIG.5

Figure 5 shows how two units, Device 1 (labeled 10) and Device 2 (labeled 20), are connected to each other by a Fabric Link 30 via ports F1 and F2 to form one distributed router. Ex. 1006 ¶ 64. Each unit (device) has four user ports P1–P4 (collectively labeled 15 on device 1) that can connect to other devices in the network such as routers and clients. *Id.* Each unit also has a bridge, labeled Vbridge 21 on device 2, and a forwarding database (FDB) used by the bridge, labeled 41 and 42 on devices 1 and 2, respectively. *Id.* Each bridge also has a router, labeled 31 and 32, and a routing information base (RIB), labeled 51 and 52. *Id.* All of the individual routers in a distributed router have the same RIB that causes them to collectively operate as one distributed router. *Id.* ¶¶ 65–71.

Weyman's distributed router can handle multicast streams. Ex. 1006 ¶¶ 65–71. Figure 11 helps illustrate how this works and is reproduced below.

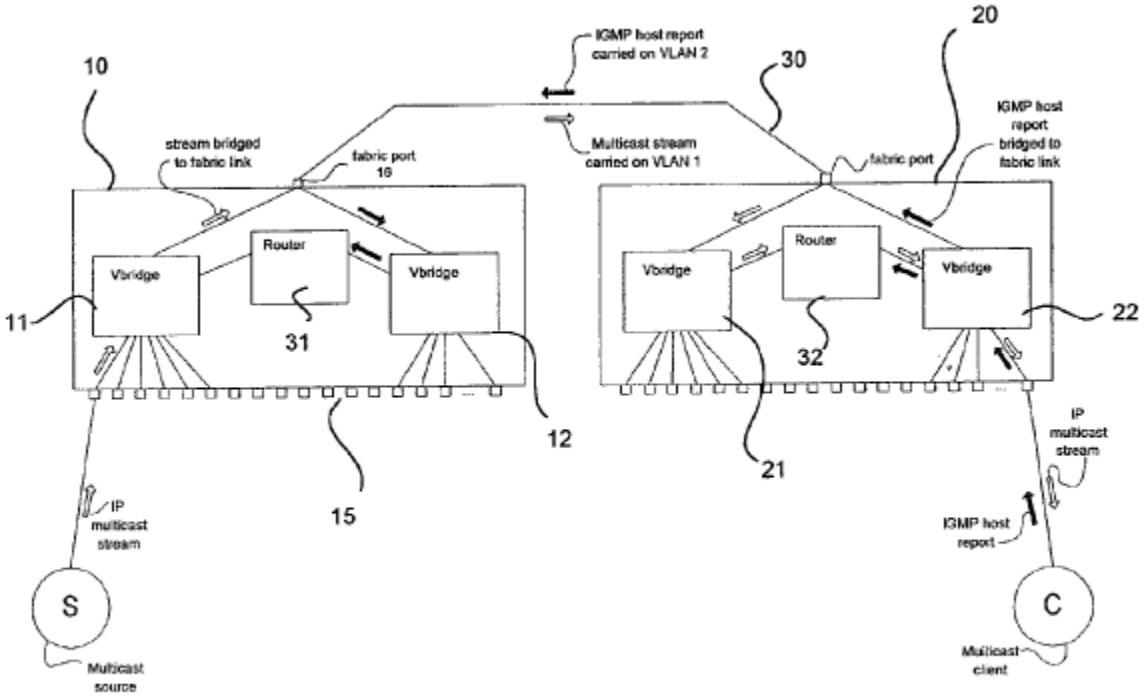

FIG.11

Figure 11 helps show how a multicast client, shown connected to the rightmost user port of unit 20, can request a multicast stream from the source connected to the leftmost port in unit 10. *Id.* ¶ 136. When client C wants to join the multicast stream, it sends a request, referred to as an IGMP host report, to unit 20. *Id.* ¶¶ 137, 162. Unit 20 sends the request to its internal router 32 and also to the fabric port for forwarding to router 31 in unit 10. *Id.* Then "the router[s] in both units would snoop the IGMP report and would use the report in the construction of the multicast forwarding tables." *Id.* ¶ 139. In this way, all RIBs have the same entries. *Id.* ¶¶ 65, 162. The Vbridge forwarding databases, FDBs, are populated in a similar way from the addresses of the packets involved in the IGMP request message. *Id.* ¶¶ 45–46. Once the forwarding information has been created, the Vbridges and routers will coordinate to deliver the multicast stream from the source to the client. *Id.* ¶¶ 103, 127.

Weyman also teaches that a unit's ports can be combined to form an "aggregated link" in order to provide "resilience in a distributed router." Ex. 1006 ¶¶ 50, 86. An aggregated link "comprises a multiplicity of physical connections [i.e., ports] constituting a single logical connection." *Id.* ¶¶ 50, 88–89.

3. Hu

Hu is a U.S. patent titled "System and Method of Communicating a Media Stream." Ex. 1007, code (54). Similar to Blease and Weyman, Hu discloses using communication devices to deliver multicast content. *Id.* at col. 2, ll. 13–19.

In Hu, multicast streams are managed using a "Content Switch," which is illustrated in Figure 1, reproduced below.

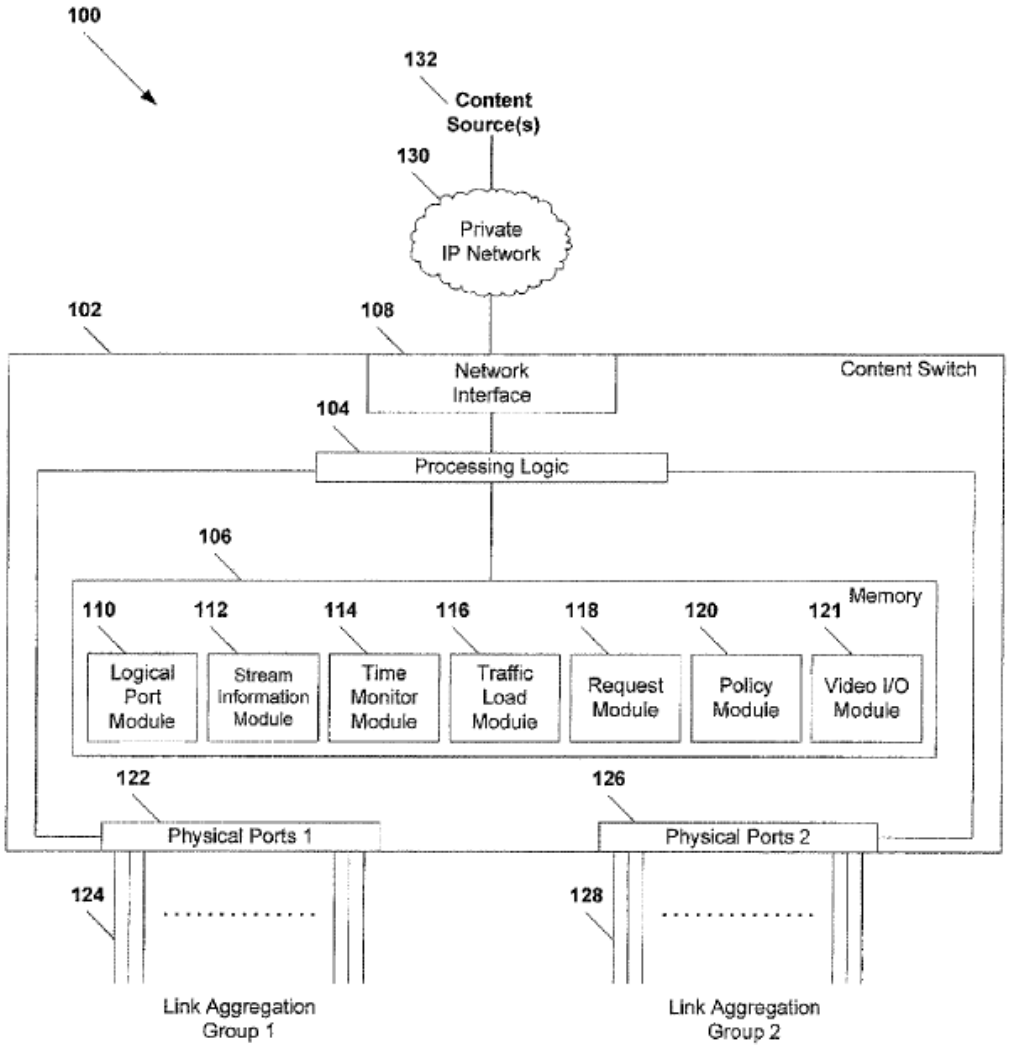

FIG. 1

Figure 1 shows content switch 102, which "communicates with a plurality of content sources 132." Ex. 1007, col. 2, ll. 56–63. "[C]ontent switch 102 can include processing logic 104" and "a network interface 108 to communicate with the private IP network 130." *Id.* at col. 3, ll. 7–12. It can also include "multiple physical ports, which may be logically grouped as illustrated by

a first plurality of physical ports 122 and a second plurality of physical ports 126." *Id.* at col. 3, ll. 12–16. "Each plurality of physical ports [122 and 126] is associated with a link aggregation group [(LAG)] and can be treated by the content switch 102 as a single logical port . . . ." *Id.* at col. 3, ll. 16–19. "A link aggregation group refers to a set or group of physical ports, such as the first plurality of physical ports 122, which are logically grouped to form a single logical port to provide the high-bandwidth link." *Id.* at col. 3, ll. 23–26.

> For example, the first plurality of physical ports 122 can be associated with a first link aggregation group 124 and can be treated by the content switch 102 as a first logical port. Similarly, the second plurality of physical ports 126 can be associated with a second link aggregation group 128 and can be treated by the content switch 102 as a second logical port.

Id. at col. 3, ll. 27–32.

In the embodiment shown in Figure 1, "the memory 106 can include a policy module 120 that stores data indicating threshold video traffic loads." Ex. 1007, col. 5, ll. 14–16. "The policy module 120 can . . . compare the video data traffic load at each of the first plurality of physical ports 122 with a pre-defined threshold." *Id.* at col. 5, ll. 16–19. "If video traffic loads at all of the first plurality of physical ports 122 exceed the pre-defined threshold, policy module 120 can . . . reject the request for the video stream." *Id.* at col. 5, ll. 19–22. Alternatively, even if the traffic load exceeds the threshold, the "system determines whether an existing data stream can be dropped at any of the ports associated with the link aggregation group, such that a total traffic load at the port at which the existing data stream is dropped is lower than the pre-defined threshold." *Id.* at col. 6, l. 65–col. 7, l. 3. "If such a

data stream can be dropped, . . . the requested video stream can be assigned to the port at which the existing data stream is dropped." *Id.* at col. 7, ll. 3–6.

4. Independent Claim 1

Petitioner argues that Blease, Weyman, and Hu collectively teach all of the limitations of claim 1, and that it would have been obvious to combine the references' teachings to achieve the method of claim 1, relying on the testimony of Dr. Lavian as support. Pet. 14–54 (citing Ex. 1003). Specifically, Petitioner relies on a combination with Weyman for certain limitations pertaining to "distributed" processing (limitations 1[a.i] and 1[d]) and a further combination with Hu for limitations pertaining to "[a]ggregating ports and limiting streams on those ports" (limitations 1[f] and 1[g]). *Id.* at 22–29. Consistent with the parties' briefing, we begin by addressing the parties' arguments regarding the asserted combination of references, then address the parties' arguments regarding individual claim limitations.

a) Motivation to Combine

(1) Modifying the Method of Blease Based on the Teachings of Weyman

Petitioner explains why and how a person of ordinary skill in the art would have been motivated to combine the teachings of Weyman with those of Blease. *See* Pet. 22–26, 28–29. As shown in Figure 4 above, Blease teaches router 42 comprising control unit 44, which interconnects multiple IFCs 54 and "is configured to determine, maintain, and use routing information to forward multicast streams to subscribers in response to subscriber requests." *Id.* at 22–23. Petitioner argues that, while Figure 4

depicts control unit 44 separately from IFCs 54, Blease states that router 42 may be configured in a "variety of ways," one of which is that "control unit 44 and its corresponding functionality may be *distributed* within IFCs 54." *Id.* at 23 (quoting Ex. 1005, col. 11, ll. 54–57) (emphasis added). According to Petitioner, Blease "leaves implementation details" regarding such distribution to a person of ordinary skill in the art, including, for example, "whether to interconnect the distributed control units 44" and "how and what information to pass between the distributed control units 44 when analyzing received requests." *Id.* at 24. Petitioner asserts that an ordinarily skilled artisan, therefore, would have looked to a reference like Weyman, which similarly pertains to delivery of multicast content over a communication network and uses a distributed architecture. *Id.* at 22–25. Specifically, Petitioner argues that a person of ordinary skill in the art would have been motivated, based on Weyman's teachings regarding a fabric link and symmetrical operation among interconnected units, to "implement[] Blease's control unit and functionality in each of the IFCs, connect[] the IFCs (*e.g.*, through a fabric), and synchronize[] their multicast distribution information (*e.g.*, in response to IGMP reports)." *Id.* at 25 (citing Ex. 1006 ¶¶ 24, 122, 159–162).

Petitioner asserts that a person of ordinary skill in the art would have been motivated to combine the references' teachings in that manner for a number of reasons. Petitioner contends that configuring a system as a set of units connected by a fabric link has "several beneficial abilities, such as appearing to other entities as a single entity, sharing of workloads between units, gaining data forwarding performance, and minimizing dependence on any one unit within the fabric." Pet. 25 (citing Ex. 1006 ¶ 24). Petitioner further argues that "by distributing Blease's control units and synchronizing

multicast distribution information across all units in the fabric, the system [would] benefit[] from redundancy and [be] better able to recover if any one component fails." *Id.* (citing Ex. 1006 ¶¶ 52, 72–75, 86, 93, 162). And Petitioner argues that the asserted modification to Blease would have been

> the application of known techniques (*e.g.*, Weyman's teaching of distributed multicasting including a fabric and functions of distributing requests and/or request analysis results) to a known system teaching this very implementation (*e.g.*, Blease's network device disclosed as being configurable with [a] distributed . . . control unit but lacking *explicit* details) to yield predictable results (*e.g.*, operating control units at each of Blease's IFCs and processing requests received among the IFCs).

Id. at 25–26.

Lastly, Petitioner argues that a person of ordinary skill in the art would have had a reasonable expectation of success in combining the references' teachings as described above because Blease states that router 42 can be configured in different ways and "specifically suggests distributing control unit 44 to IFCs 54," and the asserted modification "merely require[s] techniques well-known to, and within the ordinary skill of," a person of ordinary skill in the art, such as the well-known use of a "fabric." Pet. 28–29 (citing Ex. 1006 ¶ 2). Petitioner's contentions regarding a motivation to combine and reasonable expectation of success are supported by testimony from Dr. Lavian. *See* Ex. 1003 ¶¶ 87–91.

Patent Owner makes a number of arguments in response. Patent Owner first argues that "Blease's global port control technique is incompatible with Weyman's local port control technique." PO Resp. 14–21 (citing Ex. 2005 ¶¶ 38–39, 47, 50–58, 63–66, 69). According to Patent Owner, Petitioner incorrectly reads the sentence in Blease stating that control unit 44 and its corresponding functionality may be "distributed"

within IFCs 54 to mean "replicating or copying the control unit functionality within each of the IFCs." *Id.* at 15. Patent Owner argues that "distributed" in Blease instead means "spread across" the IFCs, citing three dictionary definitions in support. *Id.* at 16; Sur-Reply 3; *see* Exs. 2003, 2004, 2006.

Patent Owner further contends that each processing unit in Weyman "only manages ports local to" that processing unit, so if Blease were modified based on Weyman's teachings, "Blease's IFCs would only contain a portion of multicast pairings." PO Resp. 16–19. Patent Owner provides the following annotated version of Weyman's Figure 10 to illustrate its position (*id.* at 19).

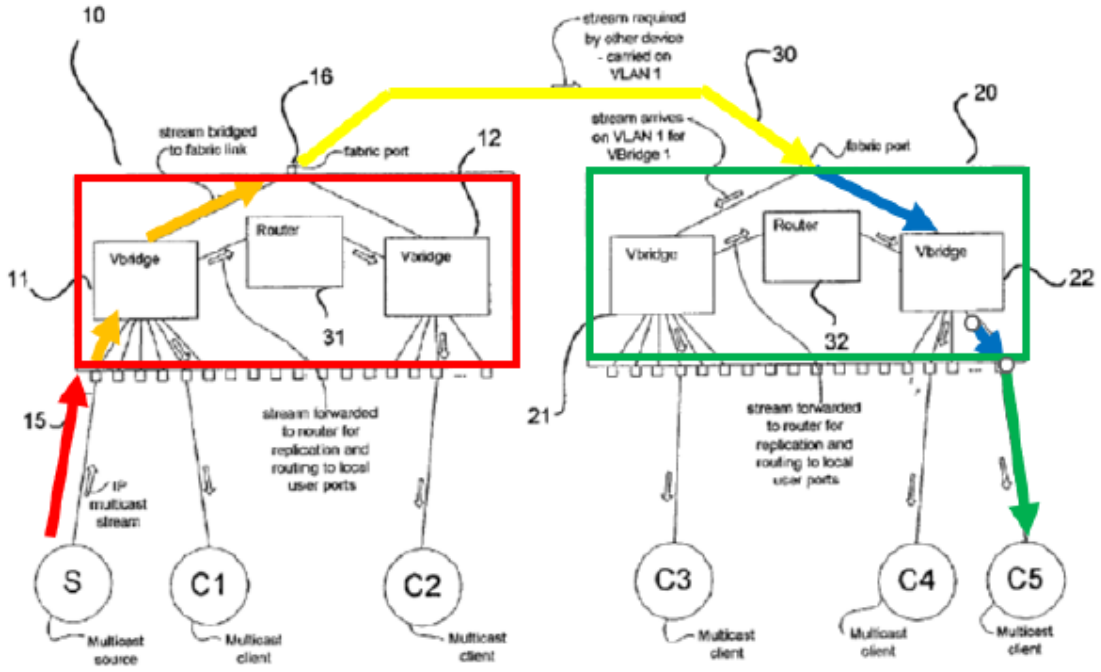

The modified figure above shows multicast traffic from a multicast source (red arrow) destined for multicast client C5 being sent to processing unit 10, and Vbridge 11 sending it over the fabric link (orange and yellow arrows) to processing unit 20 for communication to multicast client C5 (blue and green arrows) because processing unit 10 "does not manage the egress ports local to [p]rocessing [u]nit 20." *Id.* at 18.

Patent Owner asserts that a person of ordinary skill in the art would not have been motivated to combine the references' teachings because Weyman discloses multiple processing units that each "manage[] local ports" as shown above (i.e., a "distributed" system), whereas Blease discloses a central control unit that "globally manages ports" and is not concerned with synchronization between individual units (i.e., a "centralized" system). PO Resp. 19–20. Similarly, Patent Owner argues that Blease's multicast technique is "incompatible" with Weyman's technique because Blease "sends multicast streams on a different interface from the interface that received the request," whereas Weyman involves "subscribers receiv[ing] multicast streams via the same interface that receives requests for multicast streams." *Id.* at 21–22 (citing Ex. 1006, Fig. 11; Ex. 2005 ¶¶ 48–49); Sur-Reply 5–6. According to Patent Owner, an ordinarily skilled artisan would have found the references incompatible based on these "fundamental architectural differences." Sur-Reply 5–9.

Given Petitioner's reliance on it, an important issue we must resolve is how a person of ordinary skill in the art would have understood Blease's use of the term "distributed." We look to the full passage in context. Blease states the following:

> The architecture of router 42 illustrated in FIG. 4 is shown for exemplary purposes only. The invention is not limited to this architecture. In other embodiments, router 42 may be configured in a variety of ways. In one embodiment, for example, control unit 44 and its corresponding functionality may be *distributed* within IFCs 54. In another embodiment, control unit 44 may include a routing engine that performs routing functions and maintains a routing information base (RIB), e.g., routing information 46, and a forwarding engine that performs packet forwarding based on a forwarding information base (FIB) generated in accordance with the RIB.

Ex. 1005, col. 11, ll. 52–62 (emphasis added). Blease thus makes clear that the embodiment shown in Figure 4 is merely "exemplary" and router 42 may be configured in other "ways." *See id.* One of those ways is for control unit 44 and its corresponding functionality to be "distributed" within IFCs 54. *See id.* Also, the introductory sentences of the paragraph above refer to the "architecture" of router 42 and state that the invention is not limited to "this architecture" (i.e., the one shown in Figure 4). *See id.* The last two sentences then describe two other exemplary architectures: one where control unit 44 and its corresponding functionality is "distributed" within IFCs 54, and another where control unit 44 includes a routing engine and forwarding engine. *See id.* Based on the surrounding sentences in Blease, therefore, a person of ordinary skill in the art would have understood that when stating that control unit 44 and its control functionality may be "distributed" within IFCs 54, Blease was referring to a distributed routing architecture. *See* Reply 2, 7.

The next issue is what exactly constitutes a distributed architecture. Petitioner points to the testimony of Dr. Olivier in the reexamination as relevant on that point, and we agree. *See* Reply 3–7. Dr. Olivier testified that "[t]here are three basic router architectures: (1) centralized, (2) decentralized,[6] and (3) distributed." Ex. 1027 ¶ 32. As to a centralized architecture, he explained that

---

[6] The parties' dispute focuses on whether Blease teaches a "distributed" architecture or is limited to a "centralized" architecture. Accordingly, we need not discuss further the third architecture of "decentralized," which Dr. Olivier describes as a "hybrid between the two architectures." *See* Reply 2–7; Sur-Reply 1–4; Ex. 1027 ¶ 34; Tr. 26:8–16, 27:2–17 (acknowledging that the parties' dispute is over "centralized versus distributed router architectures in this case").

> [a]s the name implies, a *centralized router architecture* centralizes decision-making regarding handling the multicast packets. The entire router has a single (central) processor and a single (central) database. There are no processors in the line card, only interface logic for the ports. Every client request the router receives is sent to the central database, which updates its list of instructions for how to handle incoming multimedia packets. When the router receives a multimedia packet, the central processor decides where to send the packet based on the instructions stored in the central database.

Id. Dr. Olivier cited Hu as an example of a centralized architecture. *Id.* (citing Figure 1 of Hu, which shows a single "Processing Logic" 104). As to a distributed architecture, Dr. Olivier testified that

> [w]hile centralized router architectures maximize consistency, they run the risk of overburdening the central processor and database as the number of interfaces and ports increases. The *distributed router architecture* minimizes the risk of overburdening by replacing the central processor and database with processors and databases distributed to each line card. . . .
>
> While the distributed router architecture solves the overburdening problem, it creates a new risk of inconsistent treatment of packets. A distributed router architecture *must have some mechanism to make sure that each line card processing unit has the same instructions as all the other line card processing units in the router.* Otherwise, the line cards will behave inconsistently and multicast packets will be delivered to the wrong destinations. . . .
>
> . . .
>
> Another feature *required* for one architecture but unnecessary or counterproductive for other architectures is *the distribution of client requests among the line card processing units*. The distributed router architecture of the '394 patent requires each line card processing unit must distribute "the request among the multiple processing units within the network element" so that the other line card processing units can update their list of multicast packet streams permitted for forwarding. Without distributing every client request to every other line card

> processing unit, the line card processing units cannot update their lists and ensure consistent treatment of incoming packets.

Id. ¶¶ 33–36 (second and third emphases added). Dr. Olivier cited Figure 1 of the '394 patent, showing three line cards 36, each with a filtering database, as an example of a distributed architecture. *Id.* ¶ 33.

Dr. Olivier thus distinguished a distributed architecture from a centralized architecture on the basis that a distributed architecture has functionality duplicated at each of the processing units, and requests are distributed among those processing units to ensure synchronization. *See* Ex. 1027 ¶¶ 32–36. That understanding is consistent with the disclosure of Weyman, for example, which both parties agree describes a distributed architecture. *See* Ex. 1006, codes (54) ("System and Method for Distributed Multicast Routing"), (57), ¶¶ 24 ("When several individual data switching units are connected to form a fabric, their functionalities may be distributed among the individual units in the fabric. It is generally important to allow this distribution to occur so that the entire fabric appears to other entities as if it were a single entity."), 30–31 ("The bridging of data traffic through a distributed fabric has to appear identical to the bridging of data traffic through a single bridging unit."), 76, 162 ("Any changes to the multicast distribution tree must be kept synchronized for all the units in the fabric."), Figs. 10, 11; PO Resp. 19–20 ("Weyman discloses a distributed system"); Reply 5.

We view Dr. Olivier's testimony as more relevant than the dictionary definitions cited by Patent Owner because it specifically addresses *routing architectures* in the context of computer networks, whereas the dictionary definitions are for the term "distributed" (or "distribute") in general. *Compare* Ex. 1027 ¶¶ 32–36, *with* Exs. 2003, 2004, 2006. Patent Owner

argues that Dr. Olivier's reexamination testimony pertained to "the '394 [p]atent's distributed architecture" only, but we disagree. Sur-Reply 8. Dr. Olivier stated that "[t]here are three basic router architectures," then proceeded to describe the properties of each one, pointing to examples from the prior art (Hu and Naik) as well as the '394 patent. Ex. 1027 ¶¶ 32–36. Further, the portion of his declaration quoted above appears in a "Background" section of the declaration, prior to another section titled "Overview of the '394 Patent." *Id.* at 9, 14. Thus, we find Dr. Olivier's testimony probative as to what a person of ordinary skill in the art would have understood the "distributed" architecture referenced in Blease to be—namely, an architecture in which functionality is duplicated and incoming requests are distributed to ensure synchronization (rather than functionality being "spread across" or "divid[ed]" among the IFCs, as Patent Owner contends). *See id.* ¶¶ 32–36; PO Resp. 15–16; Sur-Reply 3.

Patent Owner's arguments that Blease and Weyman are incompatible with each other are largely premised on its position that Blease is limited to a centralized architecture. *See* PO Resp. 14–21; Sur-Reply 6. Patent Owner is correct that Figure 4 of Blease depicts a centralized architecture, but Blease expressly states that it is not limited to that type and that control unit 44 and its functionality instead may be "distributed" within IFCs 54. Ex. 1005, col. 11, ll. 52–57. Blease does not provide implementation details for that arrangement, so a person of ordinary skill in the art would have been motivated to look to a reference like Weyman, which describes a distributed architecture for multicast routing. *See, e.g.*, *Nera Innovations Ltd. v. Squires*, No. 2024-1079, 2025 WL 2992576, at *2 (Fed. Cir. Oct. 24, 2025) (nonprecedential) (finding substantial evidence for a motivation to combine where a person of ordinary skill in the art "would have looked to

[a secondary reference] for details as to how to implement [a primary reference's] charger"). The fact that Blease's centralized architecture embodiment globally manages ports (unlike Weyman's local control) and is not concerned with synchronization (unlike Weyman) does not mean that the references are incompatible, given Blease's express statement that it can use a "distributed" architecture.

Nor does the fact that Blease uses different interfaces for receiving and sending (unlike Weyman, which uses the same interface) mean that the references are incompatible. Petitioner's asserted combination is not based on incorporating all aspects of Weyman's disclosure, including its interfaces—just distributing the functionality of control unit 44. *See* Pet. 25 (asserting that, based on Weyman, a person of ordinary skill in the art "would have implemented Blease's control unit and functionality in each of the IFCs, connected the IFCs (*e.g.*, through a fabric), and synchronized their multicast distribution information (*e.g.*, in response to IGMP reports)").[7]

---

[7] In its Sur-Reply, Patent Owner also argues for the first time that Blease has three "core principles" (i.e., "[m]apping membership requests to a dedicated OIF via a centralized map," "[s]ending one copy of the multicast stream to the switch," and "[r]elying on the switch—not the router—for replication") and that replicating Blease's control unit 44 functionality in the IFCs would "contradict[]" those principles. Sur-Reply 4. Patent Owner cites pages 11–12 of its Response for that argument, but those pages merely provide an "Overview of Blease." Patent Owner's new argument, therefore, is not entitled to consideration. *See* 37 C.F.R. § 42.23(b); Patent Trial and Appeal Board Trial Practice Guide § II.I, *available at* https://www.uspto.gov/patents/ptab/trial-practice-guide ("TPG") ("Generally, a reply or sur-reply may only respond to arguments raised in the preceding brief. . . . 'Respond,' in the context of 37 C.F.R. § 42.23(b), does not mean proceed in a new direction with a new approach as compared to the positions taken in a prior filing."). Regardless, we disagree with Patent Owner's new argument

Finally, Patent Owner argues that Petitioner has not established that a person of ordinary skill in the art would have had a reasonable expectation of success in modifying Blease to distribute control unit 44 functionality at the IFCs and interconnect them via a fabric, arguing that "Petitioner's only support" is its arguments regarding a motivation to combine. PO Resp. 25; Sur-Reply 15 n.11. We disagree. In addition to Petitioner's motivation to combine analysis explaining how Blease discloses a "distributed" variation of its router but lacks implementation details for that arrangement, Petitioner asserts that it was well-known and within the skill of a person of ordinary skill in the art to connect network devices over a fabric. *See* Pet. 23–26, 28–29. That assertion is supported by the disclosure of Weyman. *See* Ex. 1006 ¶ 2 ("It is known, particularly for network switches, to interconnect a multiplicity of network units into a switching 'fabric' so that in effect, and particularly in relation to the external network, the units act as a single network entity."); *Elekta Ltd. v. ZAP Surgical Sys., Inc.*, 81 F.4th 1368, 1377 (Fed. Cir. 2023) ("Evidence of a reasonable expectation of success, just like

---

because the cited process of sending only one copy of a multicast stream and relying on the downstream switch for replication pertains to what happens at the network switches (e.g., network switches 6A and 6B in Figure 1) *after* the network device (e.g., network device 4 in Figure 1) performs its functionality. *See* Sur-Reply 4; Ex. 1005, col. 2, ll. 23–35 (disclosing that "[t]he network device sends one copy of the multicast stream to the network switch" and "[t]he network switch is then responsible for replicating and forwarding the multicast stream to the requesting subscriber devices"), Fig. 1. Petitioner's asserted combination with Weyman does not change that functionality; it only involves distributing the functionality *at* the network device (i.e., router 42 with control unit 44 and IFCs 54A–54N). *See* Pet. 23–25; Ex. 1005, col. 8, ll. 41–43 ("Router 42 [with control unit 44] may operate substantially similar to network device 4 in FIG. 1 . . . ."), Figs. 1, 4; Tr. 10:8–11:13.

evidence of a motivation to combine, 'may flow from the prior art references themselves, the knowledge of one of ordinary skill in the art, or, in some cases, from the nature of the problem to be solved.'"). We find that a person of ordinary skill in the art would have had a reasonable expectation of success in combining the teachings of Blease and Weyman to implement a "distributed" architecture in Blease.

Based on the full trial record, we conclude that Petitioner has shown sufficiently that a person of ordinary skill in the art would have been motivated to modify Blease's method based on the teachings of Weyman and would have had a reasonable expectation of success in doing so. An ordinarily skilled artisan would have been motivated to look to a reference like Weyman for implementation details and, based on the teachings of Weyman, distribute Blease's control unit and functionality within the IFCs. *See* Pet. 22–26, 28–29. Doing so would have provided various benefits, such as sharing of workload between units, improved performance, redundancy and minimized dependence on any one unit, and easier recovery if a single component fails. *See id.* We credit the testimony of Dr. Lavian in that regard, as it is explained in sufficient detail and supported by specific disclosures in Blease and Weyman, as explained above. *See* Ex. 1003 ¶¶ 87–91.

(2) Modifying the Method of Blease and Weyman Based on the Teachings of Hu

Petitioner further explains why and how a person of ordinary skill in the art would have been motivated to combine the teachings of Blease and Weyman with Hu. *See* Pet. 22–23, 26–29. Petitioner contends that Blease teaches outputs from network switch 6 (shown in Figure 1) being

"aggregated to form a high-speed link," but to the extent the reference does not similarly describe router 42 as having "aggregated outputs, links, or ports," a person of ordinary skill in the art "would have been motivated to modify router 42's links, such as one or more of inbound links 55A–55N and outbound[] links 56A–56N, to include aggregated ports that form one or more high-capacity ports and to place limits on those ports, as taught by Hu." *Id.* at 26 (citing Ex. 1005, col. 4, ll. 18–27, col. 8, ll. 41–43). Petitioner argues that Hu teaches aggregation of ports into a single logical port as a LAG, and "[h]igh-bandwidth ports increase the utility of the ports because they are able to carry more streams and/or higher bitrate streams." *Id.* at 26–27 (citing Ex. 1007, col. 1, ll. 30–39, col. 3, ll. 10–32). Aggregation also allows balance among the ports, "increas[ing] overall utilization efficiency of network components and quality of service to end-users," according to Petitioner. *Id.* (quoting Ex. 1007, col. 1, ll. 13–15; citing Ex. 1007, col. 1, ll. 30–35).

Petitioner also relies on Hu's teaching of "using pre-defined thresholds to limit the number of streams using a particular LAG." Pet. 27. Petitioner notes that Hu recognizes the importance of limiting the number of streams on a LAG to maintain quality of service, particularly where there are "fluctuations from variable video bitrates." *Id.* (citing Ex. 1007, col. 1, ll. 16–29, 58–62, col. 5, ll. 13–22, col. 6, ll. 39–50). Thus, in Petitioner's view, a person of ordinary skill in the art would have had reason "to aggregate Blease's ports into [a] LAG and to limit the . . . number of streams permitted over those groups to transfer more data (e.g., accommodating more streams or providing higher quality streams) and to do so efficiently without exceeding the bandwidth limits of the groups." *Id.* Petitioner also contends that the asserted modification based on Hu would have been

> the application of a known technique (*e.g.*, Hu's teaching of port aggregation with limits) to a known system ready for improvement (*e.g.*, enhancing Blease's output links 56 of router 42) to yield predictable results (*e.g.*, to provide high-bandwidth links and benefits from load balancing among the aggregated ports).

Id. at 28.

Lastly, Petitioner argues that a person of ordinary skill in the art would have had a reasonable expectation of success in combining the references' teachings as described above because Blease already describes aggregating outputs and the asserted modification "merely require[s] techniques well-known to, and within the ordinary skill of," a person of ordinary skill in the art, i.e., the use of "known aggregation techniques" and "basic decision-making steps using measurable communication statistics." Pet. 28–29. Petitioner's contentions regarding a motivation to combine and reasonable expectation of success are supported by testimony from Dr. Lavian. *See* Ex. 1003 ¶¶ 87, 92–95.

In response, Patent Owner argues that, contrary to Petitioner's contention, Blease does not actually describe "an aggregated link to form a high-speed link." PO Resp. 23. Patent Owner's argument does not account for the combination asserted by Petitioner, however. Blease discloses that "[a] Broadband Remote Access Server (BRAS) application may aggregate output from switches 6 into a higher-speed uplink to network device 4." Ex. 1005, col. 4, ll. 24–27. Blease thus teaches aggregation of outputs into a "higher-speed uplink," but in a different context—i.e., aggregation of outputs from the *network switch* to the network device (e.g., router 42)—than what is claimed. *See id.* Petitioner's contention is that, based on the teachings of Hu, a person of ordinary skill in the art would have modified

Blease's system to aggregate ports for the outputs of *router 42* (i.e., one or more of the ports connected to links 55A–55N and 56A–56N). Pet. 26, 45–46. Because Petitioner relies on that combination with Hu, not Blease alone, Patent Owner's argument that the "higher-speed uplink" mentioned in Blease itself does not teach the claimed aggregation is inapposite.

Patent Owner further argues that a person of ordinary skill in the art would not have made Petitioner's asserted modification because of various "incompatibilities and system differences" between Blease and Hu. PO Resp. 22–24 (citing Ex. 2005 ¶¶ 56–57, 71–76); Sur-Reply 11–13. Patent Owner contends that Blease uses a "stream-by-stream approach to managing traffic where, if the Control Unit receives a join request, new traffic flow is not established unless it is the first request for that stream," whereas Hu's "request-by-request" approach "uses a complex system which analyzes in real time the load on ports to determine if each join request's traffic load can be accommodated." PO Resp. 22–23. Patent Owner also argues that "the network switch in Blease is connected to the network device over a single physical connection, not a link aggregation group, or LAG," as in Hu. *Id.* at 23–24.

We disagree that the differences Patent Owner points out between Blease and Hu mean that a person of ordinary skill in the art would not have been motivated to combine their teachings. Petitioner's position is not that all aspects of Hu would be incorporated into Blease's system, but rather that a person of ordinary skill in the art, based on the teachings of Hu, would have made two modifications: (1) aggregating *Blease's* disclosed ports of router 42 into a high-capacity port, and (2) limiting the number of streams over that group of ports. *See* Pet. 22–23, 26–29; *KSR*, 550 U.S. at 418–420 (holding that it is often necessary to "look to interrelated teachings of

multiple patents" to determine whether there was a reason to combine known elements in the manner claimed, as "in many cases a person of ordinary skill will be able to fit the teachings of multiple patents together like pieces of a puzzle"); *Axonics, Inc. v. Medtronic, Inc.*, 73 F.4th 950, 957 (Fed. Cir. 2023) ("[T]he claim defines the invention whose obviousness is being assessed and . . . a skilled artisan may be motivated to combine particular features of different references . . . even when bodily incorporation would be impossible or inadvisable."); *Allied Erecting & Dismantling Co. v. Genesis Attachments, LLC*, 825 F.3d 1373, 1381 (Fed. Cir. 2016) (obviousness does not require incorporating all teachings of one reference into another); *In re Mouttet*, 686 F.3d 1322, 1332–33 (Fed. Cir. 2012) ("It is well-established that a determination of obviousness based on teachings from multiple references does not require an actual, physical substitution of elements. . . . Rather, the test for obviousness is what the combined teachings of the references would have suggested to those having ordinary skill in the art."). We do not see any reason why those modifications would not be technically possible due to any incompatibility between the two references' systems.

In addition, Blease's disclosure is not limited to the features cited by Patent Owner as allegedly incompatible with Hu. Dr. Olivier testifies, for example, that Blease teaches that its "network switch is connected to the network device such as a [digital subscriber line access multiplexer (DSLAM)] over *a single physical connection*, which cannot be a high-speed port as described in the '394 patent." Ex. 2005 ¶ 58 (citing Ex. 1005, col. 5, ll. 24–25 ("In the illustrated embodiment, network switch 22 may comprise[] a DSLAM. Network device 24 is connected to network switch 22 via a single physical connection."), col. 7, ll. 24–25 ("Network device 38 is

connected to network switch 36 via a single physical connection.”)). Blease’s description of a DSLAM, though, is merely an exemplary embodiment; the reference expressly contemplates other technologies (e.g., Ethernet). *See, e.g.*, Ex. 1005, col. 1, ll. 39–43 (“For example, multiple subscriber devices may connect to a router via a network switch, e.g., a digital subscriber line access multiplexer (DSLAM) or an Ethernet switch, maintained by the ISP.”), col. 2, ll. 12–15 (“Multiple subscriber devices may be connected to a network device via one or more network switches, such as digital subscriber line access multiplexers (DSLAMs) or Ethernet switches.”), col. 4, ll. 18–20 (“Network switches 6A and 6B . . . may comprise digital subscriber line access multiplexers (DSLAMs), Ethernet switches, or other devices.”). Therefore, we disagree that a person of ordinary skill in the art would have been dissuaded from the combination by any incompatibility with Blease’s DSLAM embodiment.

Next, Patent Owner disputes Petitioner’s asserted combination with Hu to “solve congestion problems” because, to the extent more data needs to be transferred, a person of ordinary skill in the art “would have simply modified the single physical link disclosed in Blease . . . into a higher speed link instead of adding the complexities of a LAG” (as in Hu). PO Resp. 24 (citing Ex. 2005 ¶ 71); Sur-Reply 14–15. Also, according to Patent Owner, “Blease does not suffer from congestion that a typical multicast system would,” as it “already described a solution to the problem of congestion, which includes only transmitting traffic for every unique multicast stream.” PO Resp. 24 (citing Ex. 2005 ¶¶ 73–76).

Obviousness, however, “does not require that a particular combination must be the preferred, or the most desirable, combination described in the prior art in order to provide motivation for the current invention.”

Honeywell Int'l Inc. v. 3G Licensing, S.A., 124 F.4th 1345, 1355 (Fed. Cir. 2025). Petitioner only needs to show that "'there is something in the prior art as a whole to suggest the *desirability* . . . of making the combination,' not whether there is something in the prior art as a whole to suggest that the combination is the *most desirable* combination available." *In re Fulton*, 391 F.3d 1195, 1200 (Fed. Cir. 2004); *see also Intel Corp. v. Qualcomm Inc.*, 21 F.4th 784, 800 (Fed. Cir. 2021) ("[It is] not necessary to show that a combination is 'the *best* option, only that it be a *suitable* option.'"); *Mouttet*, 686 F.3d at 1334 ("just because better alternatives exist in the prior art does not mean that an inferior combination is inapt for obviousness purposes"). Therefore, whether a person of ordinary skill in the art might instead have found it better in certain respects to simply change Blease's link to be a higher-speed link does not defeat the asserted combination.

Petitioner explains sufficiently the benefits of aggregating ports and limiting streams on an aggregated group of ports—namely, efficient use of available bandwidth, "increased quality of service," and "accommodation for variable video bitrates." *See* Pet. 27; Reply 17. Those alleged benefits are supported by evidence in the record, including Hu. *See, e.g.*, Ex. 1007, col. 1, ll. 11–19 (stating that "[l]oad balancing among servers and links can increase overall utilization efficiency of network components and quality of service to end-users" and "the variable nature of video content rates . . . can prevent accurate estimation of data traffic," increasing the need for load balancing), 30–35 ("[L]ink aggregation allows multiple physical links of a switch/router to be combined into a logical port that provides much higher bandwidth via lower speed ports and enables distribution of network traffic across the aggregated ports to achieve load balancing."); Ex. 1009, col. 5, ll. 47–59 (describing aggregation of two ports into a communication link

that "may have a greater bandwidth than either port . . . could provide alone" and which permits packets to "be shared or balanced among" the aggregated ports); *Intel Corp. v. PACT XPP Schweiz AG*, 61 F.4th 1373, 1379 (Fed. Cir. 2023) ("The motivation-to-combine analysis is a flexible one. '*[A]ny* need or problem known in the field of endeavor at the time of invention and addressed by the patent can provide a reason for combining the elements in the manner claimed.'"). We see no reason why these benefits would not be achieved if Blease were modified to use a LAG like in Hu. Nor do we agree that the additional cost or complexity of aggregating Blease's ports would have counseled a person of ordinary skill in the art to instead simply change Blease's link into a higher-speed link (which itself would have had additional cost), as Patent Owner asserts.

Finally, Patent Owner again argues that Petitioner has not established that a person of ordinary skill in the art would have had a reasonable expectation of success in modifying Blease's method based on Weyman and Hu. PO Resp. 25; Sur-Reply 15 n.11. We disagree for similar reasons to those explained above. *See supra* Section II.D.4.a.(1). Petitioner explains that it was well-known and would have been within the skill of a person of ordinary skill in the art to aggregate outputs as recited in claim 1, citing support in the record. *See* Pet. 28–29 & n.4 (noting that Hu describes the same known IEEE link aggregation standard as the '394 patent) (citing Ex. 1001, col. 6, l. 64–col. 7, l. 4; Ex. 1007, col. 1, ll. 36–39); *Elekta*, 81 F.4th at 1377 (a reasonable expectation of success may be evidenced by "the prior art references themselves"). We find that a person of ordinary skill in the art would have had a reasonable expectation of success in combining the teachings of Hu with those of Blease and Weyman to

aggregate ports and limit streams on the ports in Blease's "distributed" architecture.

Based on the full trial record, we conclude that Petitioner has shown sufficiently that a person of ordinary skill in the art would have been motivated to further modify the combined Blease-Weyman method based on the teachings of Hu and would have had a reasonable expectation of success in doing so. An ordinarily skilled artisan would have been motivated to look to a reference like Hu for implementation details and, based on the teachings of Hu, aggregate ports and limit streams on those ports to, for example, efficiently use available bandwidth, increase quality of service, and better accommodate variable video bitrates. *See* Pet. 22–23, 26–29. We credit the testimony of Dr. Lavian in that regard, as it is explained in sufficient detail and supported by specific disclosures in Blease, Weyman, and Hu, as explained above. *See* Ex. 1003 ¶¶ 87, 92–95.

b) Undisputed Limitations

Certain limitations of claim 1 are undisputed by Patent Owner in this proceeding. The preamble of claim 1 recites a "method for communication." Petitioner shows that Blease teaches such a method, regardless of whether the preamble is limiting. *See* Pet. 29–31.

Limitation 1[a.ii] recites that "each processing unit is assigned to a different subset of the multiple ports of the network element" and "each processing unit contains a processor for processing packets communicated over the different subset of the multiple ports to which the processing unit is assigned." Petitioner relies on Blease's teaching of each processing unit for processing packets (IFCs 54A–54N) being assigned to multiple ports (inbound links 55A–55N and outbound links 56A–56N) in router 42 shown

in Figure 4. Pet. 36–37 (citing Ex. 1005, col. 8, ll. 39–67, col. 9, ll. 25–42, col. 10, ll. 6–13, Fig. 4).

Limitation 1[c] recites "receiving from a client a request relating to reception of a given multicast packet stream." Petitioner contends that Blease teaches receiving a client request for a multicast stream, such as a membership request for an IPTV channel. Pet. 39–40 (citing Ex. 1005, col. 3, ll. 53–58, col. 8, ll. 53–67, col. 9, ll. 14–24, col. 10, ll. 6–12, col. 14, ll. 3–5).

Limitation 1[g.i] recites that "aggregating the ports comprises setting an upper limit on a number of the multicast packet streams that are permitted for forwarding over the high-capacity port." Petitioner argues that Hu teaches setting an upper limit on the number of multicast streams that are permitted for forwarding over a port. Pet. 48–51 (citing Ex. 1007, col. 3, ll. 10–32, col. 5, ll. 13–22, col. 5, l. 30–col. 6, l. 3, col. 6, l. 39–col. 7, l. 8, col. 13, ll. 8–10). According to Petitioner, Hu teaches "aggregating ports and responding to requests for streams using a pre-defined threshold for video traffic loads," where "[t]he pre-defined threshold is used, *e.g.*, to reject a request for another multicast stream if loads on a LAG would exceed the pre-defined threshold." *Id.* at 48.

Limitation 1[g.ii] recites that "the request indicates that the given multicast packet stream is to be forwarded over the high-capacity port." Petitioner argues that Blease teaches the port on which the request is received being the port that forwards the multicast stream, and a person of ordinary skill in the art would have been motivated to modify Blease's method based on Hu "to aggregate two or more links to form a high-bandwidth port for forwarding packets" (as discussed above in the analysis of Petitioner's asserted motivation to combine with Hu), noting that

Hu describes "reception of a request on a link of a LAG indicating that the LAG will be used for forwarding streams." Pet. 51 (citing Ex. 1007, col. 4, ll. 14–40, col. 6, l. 10–col. 7, l. 8); *see supra* Section II.D.4.a.(2).

Limitation 1[g.iii] recites that

> updating the list comprises modifying the list to indicate that the given multicast packet stream is permitted for forwarding over the high-capacity port only when the number of the multicast packet streams that are permitted for forwarding over the high-capacity port, including the given multicast packet stream, does not exceed the upper limit.

Petitioner cites Hu's teaching that, "responsive to a request, requests will only be granted, and streams will only be forwarded on the LAG, if the pre-defined threshold for the number of streams on the LAG is not exceeded," and contends that a person of ordinary skill in the art would have been motivated to modify Blease's method "to only modify the lists if the pre-defined threshold is not exceeded, as taught by Hu, to, *e.g.*, ensure that a certain quality of service is maintained" (as discussed above in the analysis of Petitioner's asserted motivation to combine with Hu). Pet. 51–54 (citing Ex. 1007, col. 5, ll. 31–56, col. 6, l. 26–col. 7, l. 8); *see supra* Section II.D.4.a.(2).

Patent Owner, in its Response, does not dispute that Blease, Weyman, and Hu teach the above limitations of claim 1. Petitioner's analysis for each of the limitations, supported by the testimony of Dr. Lavian, which we credit, is persuasive. *See* Pet. 29–31, 36–37, 39–40, 48–54; Ex. 1003 ¶¶ 97–101, 109–111, 116–118, 135–136, 140–146.

c) Limitation 1[a.i]

Turning to the limitations disputed by Patent Owner, limitation 1[a.i] recites "operating a network element, wherein the network element further comprises multiple interconnected processing units and multiple ports." Petitioner contends that Blease teaches operating a router (router 42), which has interconnected interface cards (IFCs 54A–54N) and multiple ports (links 55A–55N and 56A–56N), where "each IFC 54 includes control unit 44 and is a processing unit." Pet. 31–33. Petitioner relies on the combination with Weyman for the requirement that the processing units be "interconnected," arguing that a person of ordinary skill in the art "would have been motivated to implement Blease's disclosure of distributed control based on Weyman's teachings, wherein distributed control units for processing multicast traffic are interconnected by a fabric link for communication and are kept synchronized." *Id.* at 25, 33 (citing Ex. 1005, col. 11, ll. 54–57; Ex. 1006 ¶¶ 122, 162, Fig. 10). Specifically, Weyman discloses a distributed router with multiple units that process IGMP messages and multicast streams, where the units have multiple ports and are interconnected by a fabric link to maintain synchronization. *Id.* at 18–20, 33.

In response, Patent Owner disputes Petitioner's understanding of the term "distributed" in Blease. PO Resp. 25–26 (citing Ex. 2005 ¶ 53); Sur-Reply 16. As explained above, we find that a person of ordinary skill in the art would have understood Blease's disclosure to refer to a distributed routing architecture, and Weyman provides details regarding one such architecture. *See supra* Section II.D.4.a.(1).

Patent Owner also argues that Petitioner fails to explain "how a [person of ordinary skill in the art] would interconnect Blease's IFCs with the fabric link disclosed in Weyman." PO Resp. 26 (citing Ex. 2005 ¶ 79);

Sur-Reply 16–17. Patent Owner's argument is unavailing. Petitioner explains the specific modification it alleges a person of ordinary skill in the art would have made to Blease based on Weyman, i.e., "implement[ing] Blease's control unit and functionality in each of the IFCs, connect[ing] the IFCs (*e.g.*, through a fabric), and synchroniz[ing] their multicast distribution information (*e.g.*, in response to IGMP reports)." *See* Pet. 25, 33; Ex. 1003 ¶¶ 90, 107. And we agree with Petitioner that the IFCs would be connected to each other to maintain synchronization (as is required for a distributed architecture). *See supra* Section II.D.4.a.(1).

Petitioner's explanation regarding the combination of Blease and Weyman for limitation 1[a.i], supported by the testimony of Dr. Lavian, which we credit, is persuasive. *See* Pet. 31–36; Ex. 1003 ¶¶ 102–108. Based on the full trial record, we find that Blease and Weyman teach limitation 1[a.i].

d) Limitation 1[b]

Limitation 1[b] recites "storing in each processing unit a respective list, each list indicating all of one or more multicast packet streams that are permitted for forwarding by the network element, and further indicating which of the one or more ports each multicast packet stream is permitted to be forwarded to." Petitioner argues that OIF mapper 50 in Blease uses multicast forwarding information 48, which has entries that "indicate the multicast streams that router 42 is forwarding to subscribers based on received requests" and "further includes mapped OIF information that indicates which OIF is used to stream the multicast stream." Pet. 37–38 (citing Ex. 1005, col. 8, ll. 64–67, col. 10, ll. 49–52, col. 14, ll. 50–57, col. 11, ll. 5–17, 34–51). Petitioner asserts that "[m]ulticast forwarding

information 48, including individual readable entries describing multicast packet streams and related forwarding information, is . . . a list of that information." *Id.* at 38 (citing Ex. 1005, col. 6, ll. 62–63, col. 8, ll. 29–30). As to the requirement of limitation 1[b] that lists be stored "in each processing unit," Petitioner relies on the asserted modification to Blease based on Weyman, where "control unit 44 and its functionality is distributed within IFCs 54, and multicast distribution information—*i.e.*, routing and forwarding information—is kept synchronized." *Id.*

Patent Owner makes four arguments in response. First, Patent Owner argues that "in the proposed combination the multicast forwarding information (i.e., the alleged respective list) is stored in the Control Unit 44, which is centralized and not replicated in each IFC." PO Resp. 27–28 (citing Ex. 2005 ¶¶ 80–83); Sur-Reply 17. We disagree for the reasons explained above, as Petitioner has sufficiently established a combination that is a distributed (rather than centralized) architecture. *See supra* Section II.D.4.a.(1).

Second, Patent Owner argues that Weyman only "discloses divided, and not copied, functionality," where "each processing unit only learns about its local user ports" and "all other ports in the network element are associated with a fabric port." PO Resp. 28 (citing Ex. 2005 ¶¶ 63–64); Sur-Reply 17–18. Patent Owner contends that "because Weyman does not teach that each processing unit stores a list of *all* the MAC addresses, Weyman is not teaching a list containing *all* of the learned MAC addresses in the network element." PO Resp. 28 (emphasis added). According to Patent Owner, the asserted references do not teach storing lists indicating "all of one or more multicast packet streams that are permitted for forwarding by the network element." *Id.* But incorporation of all aspects of

Weyman's disclosure, including its forwarding databases, is not required. *See Axonics*, 73 F.4th at 957; *Allied Erecting*, 825 F.3d at 1381; *Mouttet*, 686 F.3d at 1332–33. Petitioner's position is that, based on the teachings of Weyman, a person of ordinary skill in the art would have modified Blease's system to distribute the functionality of control unit 44 (including its existing multicast forwarding information 48 used by OIF mapper 50). *See* Pet. 23–26, 38; *Fleming v. Cirrus Design Corp.*, 28 F.4th 1214, 1222 (Fed. Cir. 2022) ("That the proposed *combination* of [two references]—rather than one of the individual references—discloses the disputed claim limitations does not defeat the Board's conclusion of obviousness. In this case, it is sufficient that a person of ordinary skill in the art would have been motivated to combine the prior art in a way such that the combination discloses the claim limitations.").

Regardless, Weyman's disclosure is not as narrow as Patent Owner suggests. Patent Owner relies on testimony from Dr. Olivier referring to paragraph 41 of Weyman, which discloses that

> Each forwarding database within each unit in a fabric needs to contain, for each MAC address, the identity of the port on which that MAC address was learned, and being the port to which to forward any traffic destined for that MAC address. *Within each unit's forwarding database, the port against which a MAC address is learned may be either a user port or a fabric port.* If it be a fabric port, at least one other unit in the fabric would have to further forward any traffic destined to that MAC address towards an ultimate user port. In this way, traffic destined for a particular MAC address may be forwarded by several Vbridges within several units, all but the last of the Vbridges in the path being directed by the forwarding database to forward the traffic to a fabric port. Ultimately, the last unit in the path must forward the traffic to a user port and so its forwarding database would have the appropriate user port learned against the MAC address.

Ex. 1006 ¶ 41 (emphasis added); *see* Ex. 2005 ¶ 63. The next paragraph of Weyman, though, explains that other products

> have hardware support for the learning of MAC addresses directly against any user port within the fabric, regardless of the unit on which the user port is located. In these circumstances, *it would not be necessary to reference the fabric ports in the forwarding databases. An identifier for the user port may be used instead*, this identifier being unique within the entire distributed fabric.

Ex. 1006 ¶ 42 (emphasis added). We agree with Petitioner that paragraph 41 describes an example in which Weyman's forwarding databases use fabric ports, but "Weyman is not limited to that example and specifically states [in paragraph 42] that user ports (*i.e.*, the device's ports for external connections) are used instead." *See* Reply 9.

Third, Dr. Lavian testifies that "[w]hile Blease does not illustrate an example of multicast forwarding information 48, a person of ordinary skill in the art would have recognized that multicast forwarding information 48 is a 'list' because it includes a structure in which entries are added, removed, and processed as individual items." Ex. 1003 ¶ 114; *see* Pet. 38. Patent Owner disputes whether those features mean that multicast forwarding information 48 is a "list." PO Resp. 28–30; Sur-Reply 18–19 & n.13 (arguing that Blease "requires complex multi-field mapping tables" rather than "simple lists for routing and traffic management"). Patent Owner cites Dr. Olivier's testimony that there are other structures with entries that can be added, removed, and processed that would not be considered a "list," such as "a tree data structure (e.g., forwarding tree)," "hash data structures," or "stack data structures." PO Resp. 29–30 (citing Ex. 2005 ¶¶ 85–86). Patent Owner also points out that Blease uses the word "listed" elsewhere in its

disclosure, but does not refer to multicast forwarding information 48 as a "list." *Id.* at 30 n.7 (citing Ex. 1005, col. 6, ll. 62–63, col. 8, ll. 29–30).

Neither party proposes an interpretation for the term "list" in claim 1, and Patent Owner does not explain in any detail what is necessary to make certain data a "list." Limitation 1[b] merely requires that each list "indicat[e]" two items of data ("all of one or more multicast packet streams that are permitted for forwarding by the network element" and "which of the one or more ports each multicast packet stream is permitted to be forwarded to"). The claim does not specify any particular format or level of detail for the recited "list." Thus, to the extent Patent Owner contends that multicast forwarding information 48 is not a "list" because it is *more* complex, or contains *more* information, than is necessary, that argument is unavailing.

We credit Dr. Lavian's explanation as to how multicast forwarding information 48 indicates the two items of data and constitutes a "list," as it is supported by various disclosures in Blease describing the information as having individual "entries" that can be added and deleted. *See* Ex. 1003 ¶¶ 112–115; Ex. 1005, col. 10, ll. 50–55 ("Multicast forwarding information 48 controls replication and forwarding of multicast packets to subscriber devices. Control unit 44 updates multicast forwarding information 48 based on messages received from the subscriber devices that indicate a desire to join or leave multicast groups, i.e., to receive or stop receiving multicast streams."), col. 10, l. 62–col. 11, l. 16 (referencing individual "entr[ies] in multicast forwarding information 48," and adding and deleting an entry for a mapped OIF), col. 11, ll. 34–51 (similar), col. 14, ll. 14–17, 50–54 (similar). Further, contrary to Patent Owner's argument, we view the fact that Blease discloses information being "listed" in the OIF map as supporting Dr. Lavian's view that a person of ordinary skill in the art would

have similarly understood multicast forwarding information 48 to be a list, given that both the OIF map and multicast forwarding information store data as individual entries that can be processed, added, and removed. *See* Ex. 1005, col. 2, ll. 23–25, col. 5, ll. 60–63, col. 8, ll. 29–38, col. 10, l. 14–col. 11, l. 51, col. 14, ll. 10–57.

Fourth, Patent Owner argues that multicast forwarding information 48 does not indicate "all of one or more multicast packet streams that are permitted for forwarding by the network element," as recited in limitation 1[b]. PO Resp. 30–31 (citing Ex. 2005 ¶¶ 54–55, 86); Sur-Reply 19–20. Patent Owner asserts that in Blease, "if a stream is requested that is already being forwarded, the multicast forwarding information . . . is not updated," which "is at odds with the updating recited in the '394 patent, which occurs every time a stream is received, not just the first time." PO Resp. 31 (citing Ex. 1005, col. 10, l. 67–col. 11, l. 2, col. 14, ll. 52–54).

Limitation 1[b] only requires that each list indicate "all of *one or more* multicast packet streams that are permitted for forwarding by the network element" (emphasis added) and thus would be satisfied by a single stream permitted for forwarding. For example, in the portions of Blease cited by Patent Owner, an individual requested multicast stream may be "not currently forwarded," in which case a new entry would be added to multicast forwarding information 48. *See* Ex. 1005, col. 10, ll. 62–67, col. 14, ll. 46–51. Further, limitations 1[c] and 1[d] recite a single step of receiving a "request" and "updating the respective list in each processing unit responsively to the request." We do not see any requirement in the claim language that an update occur "every time" a request is received, as Patent

Owner contends.[8] *See* Tr. 31:18–20 (acknowledging that the claimed method may be satisfied by a single "request").

Petitioner's explanation regarding the combination of Blease and Weyman for limitation 1[b], supported by the testimony of Dr. Lavian, which we credit, is persuasive. *See* Pet. 37–39; Ex. 1003 ¶¶ 112–115. Based on the full trial record, we find that Blease and Weyman teach limitation 1[b].

e) Limitation 1[d]

Limitation 1[d] recites "distributing the request among the multiple processing units within the network element, and updating the respective list in each processing unit responsively to the request." Petitioner first cites Blease's teaching of a membership request being received at an IFC and forwarded to control unit 44. Pet. 41 (citing Ex. 1005, col. 10, ll. 12–13). Petitioner then argues that, in the asserted combination with Weyman, "control unit 44 and its functionality is distributed within IFCs 54, and multicast distribution information—*i.e.*, routing and forwarding information—is kept synchronized." *Id.* Petitioner points to paragraph 162 of Weyman, which discloses that

> [a]ny changes to the multicast distribution tree must be kept synchronised for all the units in the fabric. One possibility is to cause merely one unit to process the IGMP report and to send updates to the remainder of the units in the fabric. Alternatively the IGMP message could be delivered to every unit in the fabric for processing.

[8] Blease's disclosure regarding updating multicast forwarding information 48 is discussed further below in connection with limitation 1[e] of selectively forwarding multicast packets "in accordance with the respective updated lists." *See infra* Section II.D.4.f.

Ex. 1006 ¶ 162; *see* Pet. 41. Petitioner then makes alternative arguments based on those two options, arguing that a person of ordinary skill in the art would have configured the IFCs in Blease so that either "(1) the request is distributed to each control unit 44 in each IFC 54 for processing, or (2) the request is processed by the control unit 44 of the IFC 54 that received the request, and result[s] are distributed accordingly." Pet. 41.

We conclude that Petitioner has made a sufficient showing for its first argument. In the first modification, "each control unit 44 of each IFC 54 will analyze the request and update its own stored multicast forwarding information 48." Pet. 41. For example, OIF mapper 50 of one control unit 44 would analyze an incoming request and, "in some cases, decide[] that the interface on which the request is received will be the interface used to forward the requested multicast to the subscriber . . . and update[] multicast forwarding information 48 accordingly." *Id.* at 41–42 (citing Ex. 1005, col. 6, l. 62–col. 7, l. 3, col. 14, ll. 10–20). In other words, OIF mapper 50 would operate as is disclosed in Blease, with the only difference being that, based on the teachings of Weyman, requests are distributed to each control unit in the distributed architecture to maintain synchronization. That modification is consistent with the disclosure of Weyman, which describes delivering a request "to every unit in the fabric for processing." *See* Ex. 1006 ¶¶ 135–139 (describing forwarding an IGMP host report to other units over the fabric link and each unit "us[ing] the report in the construction of the respective forwarding table in the router"), 162; Ex. 1029, 35:1–36:23 (Dr. Olivier agreeing in the Cisco IPR that, as described in paragraph 162 of Weyman, "when one of the units in the distributed router receives an IGMP host report, the IGMP host report is shared with all the units in the distributed router").

Patent Owner makes a number of arguments focusing on Blease or Weyman individually. *See* PO Resp. 32–33 (citing Ex. 2005 ¶¶ 54, 84–86). For example, Patent Owner contends that "Blease discloses distributing the request to the Control Unit (e.g., the processor) and not the IFCs (e.g., the processing units)." *Id.* at 33. But that ignores the asserted modification to Blease, where an incoming request is distributed among the control units in the distributed architecture. *See* Pet. 40–42. Conversely, focusing on Weyman, Patent Owner argues that "[s]ynchronizing a multicast distribution tree [in Weyman] is not the same as updating the respective list in each processing unit" because "[a] tree data structure is not a list." PO Resp. 34. But Blease is relied upon for the alleged "list" (i.e., multicast forwarding information 48), not Weyman. *See supra* Section II.D.4.d. "Where, as here, the grounds for obviousness are based on a specific combination of references, arguments that 'attack the disclosures of the two references individually' lack merit. . . . [References asserted in an obviousness combination] must be read together, not in isolation." *Palo Alto Networks, Inc. v. Centripetal Networks, LLC*, 122 F.4th 1378, 1386 (Fed. Cir. 2024).

Patent Owner also makes various arguments directed to Petitioner's second argument, including that Petitioner allegedly broadened the claim term "request" to be "results of processing the request" and incorrectly relied on arguments for dependent claims 4 and 14. *See* PO Resp. 32–33; Sur-Reply 20–21. We need not decide those issues, though, as we are persuaded by Petitioner's first argument.

Petitioner's explanation regarding the combination of Blease and Weyman for limitation 1[d], supported by the testimony of Dr. Lavian, which we credit, is persuasive. *See* Pet. 40–42; Ex. 1003 ¶¶ 119–124.

Based on the full trial record, we find that Blease and Weyman teach limitation 1[d].

f) Limitation 1[e]

Limitation 1[e] recites "selectively forwarding multicast packets associated with the given multicast packet stream by the processing units in accordance with the respective updated lists." Petitioner argues that in Blease, once multicast forwarding information 48 is updated, a multicast stream will only be forwarded in accordance with that information (i.e., "the multicast stream is pushed to a network switch over the mapped OIF that was mapped by OIF mapper 50 in multicast forwarding information 48"). Pet. 44–45 (citing Ex. 1005, col. 8, ll. 64–67, col. 10, ll. 49–52, col. 14, ll. 50–57, Fig. 6B (step 82)).

Patent Owner responds that Petitioner's arguments regarding Blease are conclusory and incorrect because "when a request is received for a non-unique multicast flow, the multicast forwarding information remains unchanged" and, therefore, "the multicast packets cannot be identified in the multicast forwarding information." PO Resp. 35. As Petitioner points out, though, "[j]ust as 'an accused product that sometimes, but not always, embodies a claimed method nonetheless infringes,' . . . a prior art product that sometimes, but not always, embodies a claimed method nonetheless teaches that aspect of the invention." *Hewlett-Packard Co. v. Mustek Sys., Inc.*, 340 F.3d 1314, 1326 (Fed. Cir. 2003); *see* Reply 22. Patent Owner's assertion that multicast forwarding information is not changed in one circumstance (i.e., when the request is for a "non-unique multicast flow") means that the information *is* changed in at least one other situation (i.e., when the request is for a "unique multicast flow"). *See* PO Resp. 35;

Ex. 2005 ¶ 90 (Dr. Olivier similarly opining that "[i]n this case" of a request for a non-unique multicast flow, the multicast forwarding information would remain unchanged). Blease teaches that "OIF mapper 50 determines whether the multicast stream associated with the requested multicast group is already being forwarded" and, if not, OIF mapper 50 "adds the mapped OIF to multicast forwarding information 48" and "pushes the multicast stream to the network switch over the mapped OIF." Ex. 1005, col. 10, ll. 55–67, col. 14, ll. 38–51. Multicast forwarding information 48, therefore, is updated in that circumstance, and is used to forward multicast packets. *See id.* at col. 8, ll. 64–67, col. 10, ll. 50–52 ("Multicast forwarding information 48 controls replication and forwarding of multicast packets to subscriber devices.").

Patent Owner also argues that multicast packets are not forwarded "in accordance with the respective updated lists," as recited in limitation 1[e], because Petitioner fails to show that multicast forwarding information 48 is a "list." PO Resp. 36 (citing Ex. 2005 ¶ 90); Sur-Reply 20. We disagree that Blease does not teach the recited "lists" for the reasons explained above. *See supra* Section II.D.4.d.

Petitioner's explanation regarding the disclosure of Blease for limitation 1[e], supported by the testimony of Dr. Lavian, which we credit, is persuasive. *See* Pet. 44–45; Ex. 1003 ¶¶ 129–131. Based on the full trial record, we find that Blease teaches limitation 1[e].

g) Limitation 1[f]

Limitation 1[f] recites that "operating the network element comprises aggregating two or more of the ports to form a high-capacity port."

Petitioner contends that Hu teaches "aggregating ports 122, 126 of a switch to form LAGs 124, 128 that each provide high-bandwidth links." Pet. 46–48 (citing Ex. 1007, col. 3, ll. 10–32, which refer to the ports on switch 102 in Figure 1 of Hu). Petitioner asserts that a person of ordinary skill in the art "would have been motivated to modify Blease to include aggregated ports in or among links 55A–55N and 56A–56N to, *e.g.*, form high-bandwidth links and provide the ability to balance packets among aggregated ports." *Id.* at 46 (citing Ex. 1003 ¶ 133). Patent Owner does not dispute that Hu teaches aggregating ports to form a high-capacity port, but argues that a person of ordinary skill in the art would not have been motivated to "modify Blease to include the LAGs disclosed in Hu" and instead "would have added a higher capacity link," referring to its earlier arguments regarding a motivation to combine. PO Resp. 36–37. We disagree with those arguments for the reasons explained above. *See supra* Section II.D.4.a.(2). Petitioner's explanation regarding the combination of Blease with Hu for limitation 1[f], supported by the testimony of Dr. Lavian, which we credit, is persuasive. *See* Pet. 45–48; Ex. 1003 ¶¶ 132–134. Based on the full trial record, we find that Blease and Hu teach limitation 1[f].

h) Conclusion

Petitioner has shown sufficiently that Blease, Weyman, and Hu collectively teach all of the limitations of claim 1 and that a person of ordinary skill in the art would have been motivated to combine the references' disclosures to arrive at the method of claim 1 with a reasonable expectation of success. *See* Pet. 14–42, 44–54; Ex. 1003 ¶¶ 85–124,

129–136, 140–146. Based on all of the evidence of record, we determine that Petitioner has proven, by a preponderance of the evidence, that claim 1 would have been obvious based on Blease, Weyman, and Hu under 35 U.S.C. § 103(a).

5. Independent Claim 11

Independent claim 11 is similar to claim 1, but recites a network element rather than a method. Petitioner largely refers to its earlier arguments regarding claim 1. *See* Pet. 57–61. Patent Owner likewise argues the two claims together, referring to limitations 1[a.i], 1[b], 1[d], 1[e], and 1[f] together with limitations 11[b.i], 11[b.v], 11[b.vii.α], 11[b.vii.β], and 11[c.1], respectively. PO Resp. 14–37. We disagree with Patent Owner's arguments for the reasons explained above. *See supra* Section II.D.4. In view of those reasons and in light of Petitioner's arguments and supporting evidence, we are persuaded that Petitioner has proven, by a preponderance of the evidence, that claim 11 also would have been obvious based on Blease, Weyman, and Hu under 35 U.S.C. § 103(a). *See* Pet. 57–61; Ex. 1003 ¶¶ 85–124, 129–136, 140–146.

6. Dependent Claims 2, 4, 6, 7, 12, 14, and 17

Patent Owner does not argue dependent claims 2, 6, 7, 12, and 17 separately from their respective parent claims 1 and 11. *See* PO Resp. 37 (arguing that Petitioner failed to establish unpatentability of claims 2 and 12 "for the same reasons" argued for parent claims 1 and 11). We disagree with Patent Owner's arguments regarding parent claims 1 and 11 for the reasons explained above. *See supra* Sections II.D.4–5.

Regarding claims 4 and 14, Patent Owner argues that "Petitioner and Dr. Lavian provide nothing more than a conclusory statement that dependent claims 4 and 14 are disclosed by Blease in view of Weyman and a cite to claim 1[d]." PO Resp. 38. Although Petitioner refers to its earlier arguments for limitation 1[d], Petitioner provides a non-conclusory, persuasive explanation accounting for the language of claims 4 and 14, and cites specific support in Blease and the testimony of Dr. Lavian for its position. *See* Pet. 55–56, 61–62. Claim 4, for example, recites that "distributing the request comprises distributing among the multiple processing units an identity of an ingress port over which the request was received at the network element" and "updating the list comprises causing the list to indicate that the given multicast packet stream is permitted for forwarding over the ingress port." Petitioner explains that the combination of Blease and Weyman teaches that "distributing the request and updating the list responsive to the request results in updating multicast forwarding information 48 in each IFC 54 to include the identity of the interface that received the request—*i.e.*, the ingress port over which the request was received at router 42." Pet. 55–56 (citing Ex. 1005, col. 6, l. 62–col. 7, l. 3, col. 14, ll. 10–20; Ex. 1003 ¶¶ 152–153). Therefore, according to Petitioner, "the information distributed from the receiving IFC 54 identifies the ingress port over which the request was received for adding to multicast forwarding information 48." *Id.* We also disagree with Patent Owner's arguments regarding limitation 1[d] for the reasons explained above. *See supra* Section II.D.4.e.

We have reviewed Petitioner's contentions and supporting evidence, including the testimony of Dr. Lavian, and are persuaded that Petitioner has proven, by a preponderance of the evidence, that claims 2, 4, 6, 7, 12, 14,

and 17 would have been obvious based on Blease, Weyman, and Hu under 35 U.S.C. § 103(a), for the reasons stated by Petitioner. *See* Pet. 54–57, 61–62; Ex. 1003 ¶¶ 147–159.

7. Dependent Claim 9

Claim 9 depends from claim 8. Petitioner relies on Hu for certain additional limitations of claim 9 and not for limitation 8[f.ii] (for which it relies solely on Weyman). *See* -989 Pet. 49–58. Accordingly, for the reasons explained below regarding parent claim 8, Petitioner has not proven, by a preponderance of the evidence, that claim 9 would have been obvious based on Blease, Weyman, and Hu under 35 U.S.C. § 103(a).[9] *See infra* Section II.F.

E. Obviousness Ground Based on Blease, Weyman, Hu, and Deng (Claim 16)

1. Deng

Deng is a published U.S. patent application titled "Data Link Layer Switch [w]ith Multicast Capability." Ex. 1008, code (54). Deng teaches a switch that is used with multicast streams. *Id.* at code (57). In Deng, requests to join a multicast group are stored in a multicast address table, and a timer is started. *Id.* ¶¶ 18, 31, 35–36. When the timer expires, the address is removed from the table. *Id.* ¶ 36. In this way, the multicast address table is kept up to date so that packets will only be sent to the hosts that have currently joined a multicast group. *Id.* ¶ 17.

[9] In the Cisco IPR, we determined that Cisco had proven claim 9 to be unpatentable based on a different combination of references (identified as Weyman, Jain, LeMaire, and Li). IPR2024-00506, Paper 38 at 75–77.

2. Claim 16

Claim 16 depends from claim 11 and recites two additional limitations. Limitation 16[a.i] recites that "the processing units are configured to track a use of a permission to forward a certain multicast packet stream over a certain port by monitoring requests relating to the certain multicast packet stream that are received at the network element." Petitioner relies on Hu's teaching of tracking incoming requests and determining, before rejecting the request, "whether an existing [data] stream can be dropped at any of the ports associated with the link aggregation group, such that a total traffic load at the port at which the existing data stream is dropped is lower than the pre-defined threshold." Pet. 63 (quoting Ex. 1007, col. 6, l. 65–col. 7, l. 8).

Limitation 16[a.ii] recites that "the processing units are configured . . . to remove the permission from the respective lists responsively to determining that the permission is aged." Petitioner relies on a combination with Deng, arguing that Deng teaches "storing the address of a host joining a multicast group in a multicast address table," "associating a timer with the added address," and "removing the address from the multicast address table when the timer expires." Pet. 63–64 (citing Ex. 1008 ¶¶ 18, 31, 35–36). Petitioner asserts that a person of ordinary skill in the art would have been motivated to apply the teachings of Deng to the method of Blease (as modified in view of Weyman and Hu) for a number of reasons. *Id.* at 64–66. For example, Petitioner argues that Hu teaches comparing statistics to a threshold but "leaves to the [person of ordinary skill in the art] what statistics or conditions to monitor for dropping existing streams," and Deng teaches "a particular policy to automatically drop streams: to track multicast addresses and remove them after expiration of a timer." *Id.* at 64–65.

According to Petitioner, incorporating Deng's removal process would "provide a simple time-based method for maintaining sufficient bandwidth and overhead for streams, thereby increasing the quality of service of multicast streams." *Id.* at 65. Petitioner's contentions regarding a motivation to combine and reasonable expectation of success are supported by testimony from Dr. Lavian. *See* Ex. 1003 ¶¶ 160–168.

Patent Owner responds that an ordinarily skilled artisan would not have been motivated to make the asserted modification because "Hu already discloses dropping streams if the video traffic is below a threshold" and the artisan "would understand that Hu's technique . . . is better than the technique disclosed in Deng." PO Resp. 38–39 (citing Ex. 1007, col. 5, ll. 44–49; Ex. 2005 ¶¶ 102–103). According to Patent Owner, Hu describes "duplicative and more efficient functionality" to Deng, so "Petitioner's proposed modification offers no discernible benefits and introduces drawbacks like duplicative functionality, wasted processing resources, added system complexity, and degraded user experience." Sur-Reply 21–22.

Patent Owner's argument that Hu's technique is "better" than Deng's is inapposite because, again, obviousness "does not require that a particular combination must be the preferred, or the most desirable, combination described in the prior art in order to provide motivation for the current invention." *See Honeywell*, 124 F.4th at 1355; PO Resp. 39. Further, we do not view the functionality of Hu and Deng as duplicative. Hu describes a process in which, when a multicast request is received, the system checks whether an existing stream on the LAG can be dropped so that the total video traffic load would not exceed a "pre-defined threshold" if the new stream is added. Ex. 1007, col. 6, ll. 10–60, Fig. 2 (steps 202–214); *see* Pet. 63; PO Resp. 39. If so, the existing stream is dropped and the new

data stream is assigned to the identified port; if not, the request is rejected. Ex. 1007, col. 6, l. 60–col. 7, l. 8, Fig. 2 (steps 215–220). Deng teaches a different process of starting a timer upon joining a multicast group and removing the address from a table when that timer expires. Ex. 1008 ¶¶ 35–36. Thus, Hu looks at current video traffic load to determine whether it exceeds a pre-defined threshold, whereas Deng looks at time to see whether the timer has expired and a list address (e.g., for a particular multicast request) is no longer appropriate and can be removed. Given Hu's concern for efficient usage of bandwidth, and dropping existing streams when needed to free bandwidth, we agree with Petitioner that utilizing a timer to determine whether an existing stream can be removed in the combined system of Blease, Weyman, and Hu would have been a "simple" way to "maintain[] sufficient bandwidth and overhead for streams, thereby increasing the quality of service of multicast streams." *See* Pet. 65; Ex. 1007, col. 1, ll. 11–19 ("Load balancing among servers and links can increase overall utilization efficiency of network components and quality of service to end-users."), col. 6, l. 10–col. 7, l. 8.

Patent Owner also disputes Petitioner's asserted combination, arguing that Blease is incompatible with Hu and Deng because "Blease does not keep track of individual multicast streams while Hu or Deng both apply to individual multicast streams." PO Resp. 39. We disagree that Blease is incompatible with the other references for the reasons explained above. *See supra* Section II.D.4.a.

Petitioner has shown sufficiently that Blease, Weyman, Hu, and Deng collectively teach all of the limitations of claim 16 and that a person of ordinary skill in the art would have been motivated to combine the references' disclosures to arrive at the method of claim 16 with a reasonable

expectation of success. *See* Pet. 62–66; Ex. 1003 ¶¶ 160–168. Based on all of the evidence of record, we determine that Petitioner has proven, by a preponderance of the evidence, that claim 16 would have been obvious based on Blease, Weyman, Hu, and Deng under 35 U.S.C. § 103(a).

F. Obviousness Ground Based on Blease and Weyman (Claims 8 and 18)

1. Claim 8

Petitioner argues that claims 8 and 18 are unpatentable over Blease and Weyman under 35 U.S.C. § 103(a).[10] -989 Pet. 14–49. For limitations 8[a.i]–[e], Petitioner's arguments are similar to those discussed above for limitations 1[a.i]–[e] and the combination of Blease and Weyman. *See id.* at 20–24, 26–43; *supra* Section II.D.4.

Next, limitation 8[f.i] recites that "operating the network element comprises initializing a new processing unit added to the network element." Petitioner argues that "Weyman teaches a process of adding a processing unit to a router fabric by, *e.g.*, updating the processing unit's configuration," citing paragraph 69 of Weyman, which states that "[i]f the system can accommodate the addition or removal of units, then when a unit with a

[10] In the Cisco IPR, we determined that Cisco had proven claims 8 and 18 to be unpatentable based on a different combination of references (identified as Weyman, Jain, and LeMaire), finding that limitation 8[f.ii] was taught by Jain and LeMaire. IPR2024-00506, Paper 38 at 58–77. As explained herein, we are not persuaded by Petitioner's arguments in this proceeding that limitation 8[f.ii] is taught or suggested by Weyman. Also, in the Decision on Institution in this proceeding, the Board found that there were questions as to Petitioner's showing for limitation 8[f.ii] and declined to reach a conclusion on whether Petitioner had shown a reasonable likelihood of prevailing on its asserted ground based on Blease and Weyman. Dec. on Inst. 43.

default configuration joins the fabric, it needs to update its configuration to that of the distributed router." -989 Pet. 43–44 (quoting Ex. 1006 ¶ 69) (emphasis omitted).

Limitation 8[f.ii] recites a three-step initialization process for a new processing unit:

> [f.ii] deactivating the ports to which the new processing unit is assigned;
>
> while the ports to which the new processing unit is assigned are deactivated, sending a multicast status request, receiving multicast membership reports sent by multicast clients in response to the multicast status request, constructing the list by the new processing unit based on the received multicast membership reports; and
>
> after constructing the list, activating the ports to which the new processing unit is assigned.

Limitation 8[f.ii] thus requires (1) an initial step of "deactivating" newly assigned ports, followed by (2) a second step of "sending" a multicast status request, "receiving" multicast membership reports in response, and "constructing" the list, all of which must be performed "while the ports . . . are deactivated" (i.e., in between deactivating and reactivating the ports of the new processing unit), and then finally (3) "activating" the ports (which takes place "after constructing the list").

Petitioner has not shown sufficiently that Blease and Weyman teach or suggest limitation 8[f.ii].[11] *See* PO Resp. 2–3, 42–43. As to the second step, Petitioner argues that Weyman teaches "determining multicast group memberships by sending query messages from a router, receiving client reports in response, and then maintaining a multicast distribution tree based

[11] Given this determination, we need not address Patent Owner's other arguments regarding claim 8. *See* PO Resp. 40–43; Sur-Reply 22–24.

on the reports," and a person of ordinary skill in the art "would have been motivated to operate Blease's router to accommodate an additional unit or IFC and to update its configuration via a multicast membership query, in view of Weyman, to, *e.g.*, replace a disabled unit." -989 Pet. 44 (citing Ex. 1006 ¶¶ 160–162; Ex. 1103 ¶¶ 138–139).

As to the requirement that the second step actions take place in between the "deactivating" and "activating" of the ports, Petitioner argues that a person of ordinary skill in the art

> would have been motivated to configure the configuration update to be performed while the processing unit (and its ports) is deactivated (*i.e.*, deactivating the ports to which the new processing unit is assigned as claimed) and activate the processing unit once it is updated (*i.e.*, after constructing the list, activating the ports to which the new processing unit is assigned, as claimed), to ensure that it is operating with information relevant to the router in which it is installed.

-989 Pet. 44. Petitioner further argues that an ordinarily skilled artisan

> would have recognized that a new unit (and its ports) would be deactivated and not be activated until it has had a chance to create and/or update its forwarding tables with the current state of multicast memberships. As Weyman explains, a newly added unit may have a "default configuration." . . . It would not be reasonable to a [person of ordinary skill in the art] to use a component's default configuration, which may have been set at manufacture or set in a prior installation and contain information that is likely irrelevant or, worse, that conflicts with the other processing units of the router.

Id. at 25 (citing Ex. 1006 ¶ 69; Ex. 1103 ¶ 94). Importantly, Petitioner cites no disclosure in Weyman (or Blease) of activating or deactivating ports, or performing any actions while certain ports are "deactivated" and then later

"activating" those ports once certain processing is completed.[12] *See id.* at 25, 44. Weyman's disclosure of a processing unit having a "default" configuration, for instance, pertains only to the request to join the fabric and does not say anything about the timing or sequence of events in which that joining occurs. *See* Ex. 1006 ¶¶ 69, 156, 161–162.

Instead of pointing to supporting disclosure in Weyman, Petitioner relies *solely* on the testimony of Dr. Lavian that a person of ordinary skill in the art would have been motivated to modify Weyman's method to deactivate ports before the disclosed processing and activate them again afterwards. *See* -989 Pet. 25, 44 (citing Ex. 1103 ¶¶ 93–94, 139). Dr. Lavian testifies, with respect to the claimed deactivating-activating sequence, that

> a person of ordinary skill in the art would not expect a processing unit being put into service to be immediately and accurately configured to operate in the current state of any particular multicast network. The processing unit may have a configuration from being installed in a different or prior-in-time network, or perhaps may never have been put into service and instead have a "default" configuration, as described by Weyman . . . . A processing unit having an incorrect or unknown configuration would thus unpredictably process packets or drop packets completely. Therefore, a person of ordinary skill would ensure that the processing unit is deactivated prior to being updated for use in the current multicast network—such that it is neither sending nor receiving packets on any of its ports—and then activate the processing unit after updating—so that it may begin the normal operation of forwarding packets to the correct ports according to the current state of the multicast network.

---

[12] The Cisco IPR, by contrast, involved a different prior art reference (Jain) that expressly disclosed "Link Down" and "Link Up" conditions set on ports of a network node to deactivate and activate the ports. *See* IPR2024-00506, Paper 38 at 63–64, 67–68.

Ex. 1103 ¶ 94. Like the Petition, Dr. Lavian's declaration does not cite any disclosure in Weyman (or Blease) for deactivating and activating ports, or performing certain actions in the time between such actions. Again, the only portion of Weyman cited pertains to a request to join the fabric from a processing unit having a "default" configuration, which does not relate to the timing or sequence of events in initialization. *See* Ex. 1006 ¶¶ 69, 156, 161–162; Ex. 1103 ¶¶ 93–94. Nor does Dr. Lavian point to any other evidence in the record supporting his conclusion that a person of ordinary skill in the art would have "ensure[d] that the processing unit is deactivated prior to being updated for use . . . and then activate[d] the processing unit after updating." *See* Ex. 1103 ¶ 94.

Accordingly, we give little weight to Dr. Lavian's conclusory opinion regarding the claimed deactivating-activating sequence. *See* 37 C.F.R. § 42.65(a); *Xerox Corp. v. Bytemark, Inc.*, IPR2022-00624, Paper 9 at 15 (PTAB Aug. 24, 2022) (precedential) ("*Xerox*") (concluding that where an expert did "not cite to any additional supporting evidence or provide any technical reasoning to support his statement," the expert's testimony "is conclusory and unsupported, adds little to the conclusory assertion for which it is offered to support, and is entitled to little weight"); PO Resp. 42 (arguing that Dr. Lavian "fails to provide any support in the prior art that establishes that the[] claim limitations are disclosed"). The Board's Trial Practice Guide further provides that

> [e]xpert testimony . . . cannot take the place of a disclosure in a prior art reference, when that disclosure is required as part of the unpatentability analysis. . . . [I]n an obviousness analysis, conclusory assertions from a third party about general knowledge in the art cannot, without supporting evidence of record, supply a limitation that is not evidently and indisputably within the common knowledge of those skilled in the art.

> *K/S Himpp v. Hear-Wear Techs., LLC*, 751 F.3d 1362, 1365 (Fed. Cir. 2014). Furthermore, because an *inter partes* review may only be requested "on the basis of prior art consisting of patents or printed publications," 35 U.S.C. § 311(b), expert testimony cannot take the place of disclosure from patents or printed publications. In other words, expert testimony may explain "patents and printed publications," but is not a substitute for disclosure in a prior art reference itself.

TPG § I.G. Petitioner and Dr. Lavian have not pointed to, and we do not find, sufficient disclosure in Weyman alone for the three-step initialization process recited in limitation 8[f.ii].

Finally, to the extent Petitioner relies on "common sense" as a basis for the three-step process of limitation 8[f.ii], we are not persuaded. *See* -989 Pet. 4, 25. "[C]ommon sense is typically invoked to provide a known motivation to combine, not to supply a missing claim limitation." *Arendi S.A.R.L. v. Apple Inc.*, 832 F.3d 1355, 1361 (Fed. Cir. 2016) (emphasis omitted). In cases "in which common sense was invoked to supply a limitation that was admittedly missing from the prior art, the limitation in question was unusually simple and the technology particularly straightforward." *Id.* at 1362 (emphasis omitted). The specific, three-step process of limitation 8[f.ii] is not unusually simple or directed to particularly straightforward technology. Regardless, "references to 'common sense' . . . cannot be used as a wholesale substitute for reasoned analysis and evidentiary support, especially when dealing with a limitation missing from the prior art references specified." *Id.* As explained above, Dr. Lavian's testimony lacks sufficient explanation and evidentiary support.

Based on the arguments and evidence submitted in this proceeding, we determine that Petitioner has not proven, by a preponderance of the

evidence, that claim 8 would have been obvious based on Blease and Weyman under 35 U.S.C. § 103(a).

2. Claim 18

Independent claim 18 is similar to claim 8, but recites a network element rather than a method. Petitioner refers to its earlier arguments regarding claim 1. *See* -989 Pet. 45–49; Ex. 1103 ¶¶ 97–140. Patent Owner argues claims 8 and 18 together. PO Resp. 40–43. Petitioner has not made a sufficient showing for limitation 8[f.ii] (or, therefore, for similar limitation 18[d.ii]) for the reasons explained above. *See supra* Section II.F.1. Accordingly, Petitioner has not proven, by a preponderance of the evidence, that claim 18 would have been obvious based on Blease and Weyman under 35 U.S.C. § 103(a).

G. Obviousness Ground Based on Blease, Weyman, and Rao (Claims 8 and 18)

1. Rao

Rao is a U.S. patent titled "Multicast High Availability Enhancements for Faster Convergence." Ex. 1024, code (54). It relates to "multicast data packet forwarding internal to a router or switch, and more particularly to router management failover behavior for multicast data packets." *Id.* at col. 1, ll. 8–11.

Figure 3 of Rao is reproduced below.

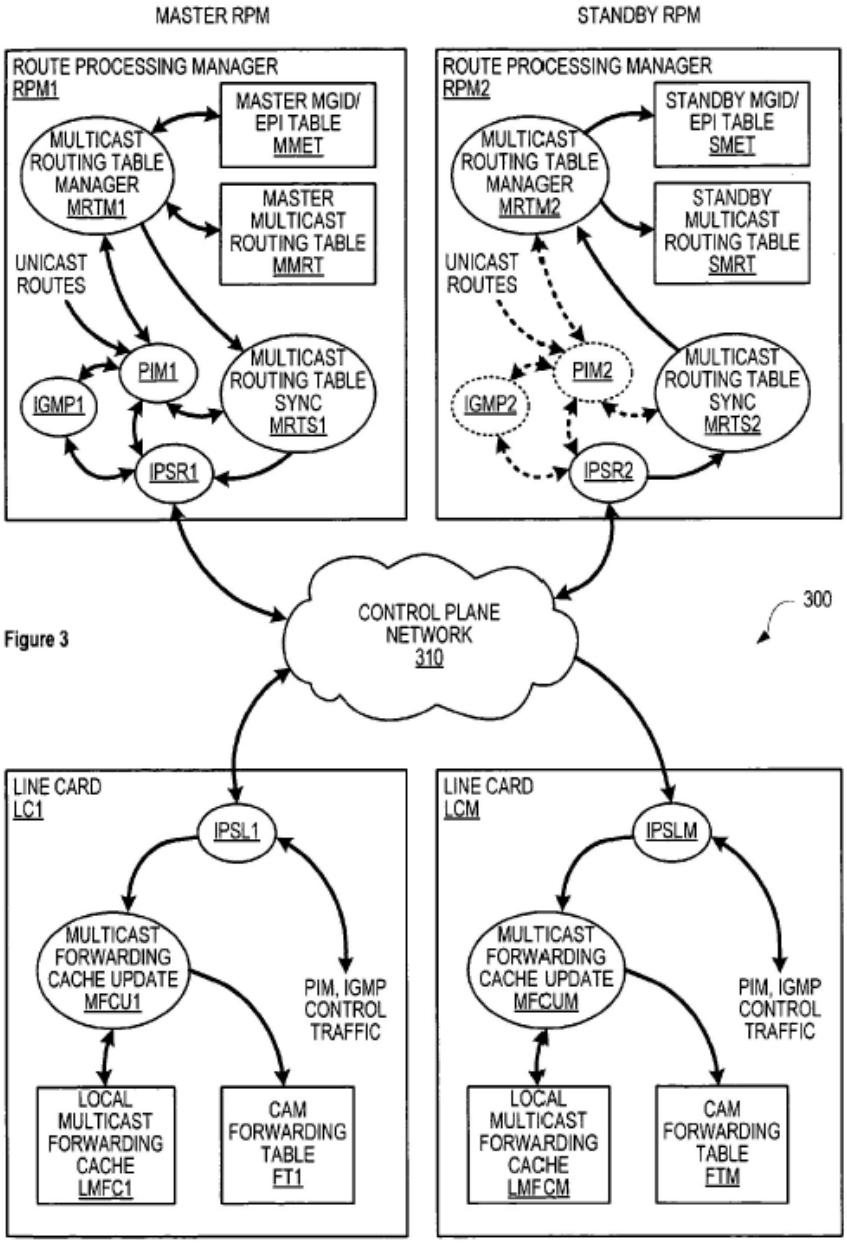

Figure 3 depicts router 300 with two route processing managers RPM1 and RPM2, designated as the "master" RPM and "standby" RPM, respectively, and connected to line cards LC1 and LCM via control plane network 310. Ex. 1024, col. 7, ll. 44–51. Figure 3 shows various processes as "bubbles" and storage in memory (i.e., "a table or information base") as rectangles. *Id.* at col. 7, ll. 51–57.

Rao teaches a method for switching to a standby route processor manager card (RPM) when a card in a router that is forwarding multicast data fails. Ex. 1024, col. 9, ll. 3–17. This involves "generat[ing] Host Membership Queries on . . . connected networks to solicit membership information from attached IGMP hosts" and starting a "configuration delay timer." *Id.* Once all responses have been received, or if the delay timer runs out, "[a]ny remaining standby routes and associated [multicast information] are declared stale and pruned," thereby ensuring that the entries in the replacement card are current. *Id.* at col. 9, ll. 47–65. Rao discloses, once this process finishes, "activating the internal router path IP multicast forwarding information for data path forwarding within" the replacement card. *Id.* at col. 9, ll. 57–59 ("the current multicast state is pushed to the line cards, and the [protocol-independent multicast (PIM)] process begins normal master operation"), col. 11, ll. 20–22.

Figure 4 of Rao is reproduced below.

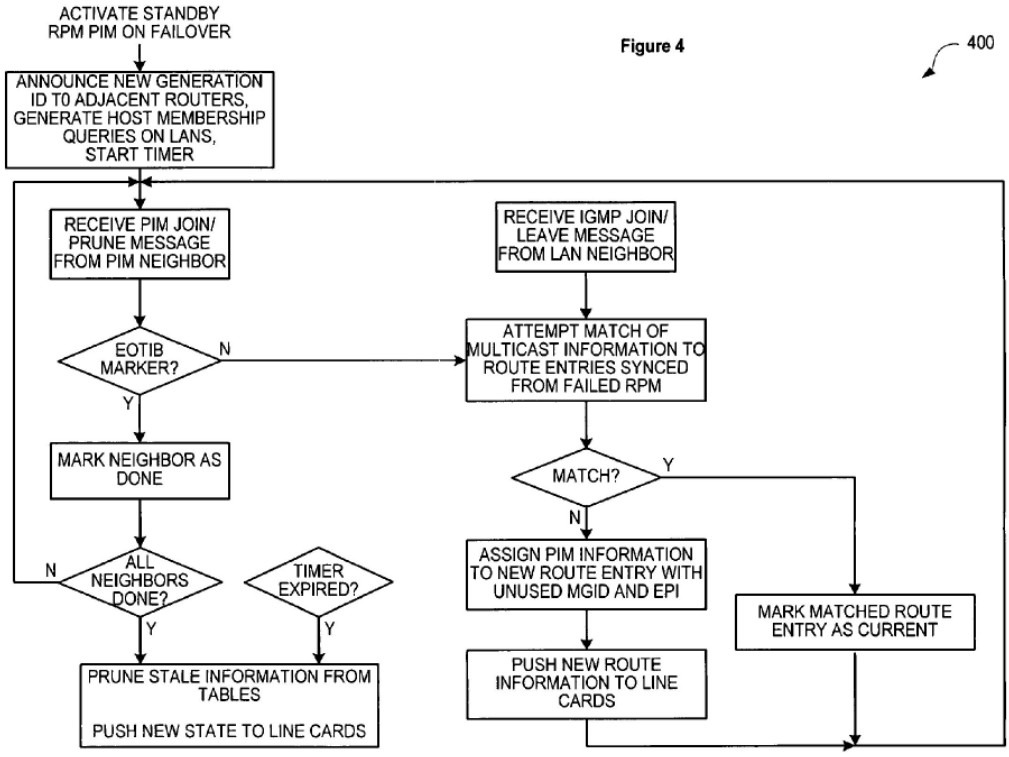

Figure 4 shows the disclosed method "for the standby RPM when failover causes the standby RPM to become the master RPM." Ex. 1024, col. 9, ll. 3–5.

2. Claim 8

Petitioner argues that claims 8 and 18 are unpatentable over Blease, Weyman, and Rao under 35 U.S.C. § 103(a).[13] -989 Pet. 62–66. Petitioner relies on its earlier arguments regarding the combination of Blease and Weyman for limitations 8[a.i]–[e], and a combination with Rao for limitations 8[f.i]–[f.ii]. *Id.*

Petitioner argues that Rao teaches initializing a new RPM by querying IGMP hosts and starting a timer, and once the timer runs out, pruning the old entries from the RPM being replaced, and then "activat[ing] the internal router path IP multicast forwarding information for data path forwarding." -989 Pet. 62–63 (quoting Ex. 1024, col. 11, ll. 20–22; citing Ex. 1024, col. 9, ll. 3–65, col. 11, ll. 29–44). Petitioner contends that Rao teaches "initializ[ing] a processing unit by activating the processing unit only after multicast membership information is solicited and a period for reply has elapsed." *Id.* at 63. Petitioner acknowledges that "Rao does not explicitly state to first" deactivate newly assigned ports, but argues that

> because Rao teaches that the RPM being initialized was a "standby RPM" to a master RPM that failed, and because the

[13] Again, in the Cisco IPR, we determined that Cisco had proven claims 8 and 18 to be unpatentable based on a different combination of references (identified as Weyman, Jain, and LeMaire), finding that certain limitations were taught by Jain and LeMaire. IPR2024-00506, Paper 38 at 58–77. As explained herein, we are not persuaded by Petitioner's arguments in this proceeding that those limitations are taught or suggested by Weyman and Rao.

> RPM's "internal router path IP multicast forwarding information" is "activat[ed]" after constructing table entries, . . . a [person of ordinary skill in the art] would have recognized that the RPM and its ports would have been "deactivated" prior to being ready for normal operations.

Id. (citing Ex. 2005 ¶ 175).

Petitioner also asserts that a person of ordinary skill in the art would have been motivated to combine Rao with Blease and Weyman because they are all in the same field and all relate to using a router for multicast data packet processing and forwarding. -989 Pet. 63. Petitioner further argues that an ordinarily skilled artisan "would have been motivated to look to known implementation procedures, such as those taught by Rao, in implementing the procedure of adding a processing unit to a router, as taught by Blease and Weyman." *Id.* at 64. And Petitioner repeats its reasoning regarding Weyman's "default" configuration, stating that "[i]t would not be reasonable . . . to use a component's default configuration, which may have been set at manufacture or set in a prior installation" and may contain irrelevant or conflicting information. *Id.* at 64–65 (citing Ex. 1006 ¶ 69). According to Petitioner, "Rao makes this clear: a new processing unit should not operate in an inconsistent manner with respect to the multicast state prior to its activation, and therefore it should assess the current state through membership queries prior to activation." *Id.* at 65 (citing Ex. 1024, col. 9, l. 66–col. 10, l. 7; Ex. 2005 ¶¶ 169, 175). Finally, Petitioner asserts that the modification based on Rao would have been "the use of a known technique (*e.g.*, Rao's teachings of querying memberships and updating tables prior to activation) to improve similar devices (*e.g.*, improving Blease's router 42 by initializing a new processing unit) in the same way (*e.g.*, to initialize the processing unit according to the current multicast state)." *Id.* at 65–66.

Petitioner has not shown sufficiently that Blease, Weyman, and Rao teach or suggest the three-step initialization process of limitation 8[f.ii].[14] *See* PO Resp. 2–3, 45–46; Sur-Reply 24–25. As to the first step in limitation 8[f.ii] of "deactivating," similar to its arguments regarding Weyman that we address above, *see supra* Section II.F.1, Petitioner cites no disclosure in Rao of "deactivating" ports. Indeed, Petitioner acknowledges that "Rao does not explicitly state" that any ports are deactivated. -989 Pet. 63.

As to the third step of "activating," Petitioner points to Rao's disclosure in its claim 1 (and dependent claims 2 and 3) of activating the standby RPM's "internal router path IP multicast forwarding information for data path forwarding [within the standby RPM]." -989 Pet. 62–63 (arguing that Rao teaches "initializ[ing] a processing unit by activating the processing unit" after the delay timer expires). Limitation 8[f.ii], however, recites "activating the *ports* to which the new processing unit is assigned" (emphasis added). The relied upon portion of Rao does not mention any ports, or state that ports, or the standby RPM or line card as a whole, are activated.[15] It only states that "internal router path IP multicast forwarding information" is activated. We do not see, and Petitioner does not explain sufficiently, what it means to "activat[e]" information in Rao, or why such activation amounts to activation of ports.

Moreover, we disagree with Petitioner's reading of Rao. Petitioner's position is that because Rao later discloses activation of the standby RPM's "internal router path IP multicast forwarding information," a person of

---

[14] Given this determination, we need not address Patent Owner's other arguments regarding claim 8. *See* PO Resp. 44–45; Sur-Reply 24.

[15] Rao discusses ports in other contexts. *See, e.g.*, Ex. 1024, col. 8, ll. 44–47, col. 9, ll. 22–35.

ordinary skill in the art would have understood that the standby RPM would have been deactivated and then initialized to act as the new master RPM going forward. *See* -989 Pet. 63. Rao, however, discloses that a multicast routing table sync process MRTS1 in the master RPM "sends multicast routing information from [a master multicast routing table (MMRT)] to a sync process MRTS2 on the standby RPM" for storage in the standby RPM's standby multicast routing table (SMRT). Ex. 1024, col. 8, ll. 59–65. "The standby RPM does not . . . construct table information independently—it merely caches multicast routing . . . information computed by the master RPM." *Id.* at col. 8, l. 66–col. 9, l. 2. Thus, the standby RPM is not "initialized" as Petitioner contends, but instead remains active and continually receives updates from the master RPM to ensure synchronization. *See id.* at col. 6, l. 29–col. 7, l. 43, col. 8, l. 59–col. 9, l. 2; -989 Pet. 63.

We also note that the first step of Figure 4 of Rao above, shown in the upper-left corner, is to "*Activate* Standby RPM PIM on Failover." Ex. 1024, Fig. 4 (emphasis added). Rao discloses that at the start of the method, i.e., "when failover causes the standby RPM to become the master RPM,"

> [t]he PIM process PIM2 and IGMP process IGMP2 are *activated* on RPM2 when RPM2 becomes the master. Upon *activation*, process PIM2 sends PIM 'hello' messages to adjacent routers, including a generation ID that is different than the one previously advertised by the prior master RPM. . . . At the same time, the new master RPM IGMP router process may also generate Host Membership Queries on its connected networks to solicit membership information from attached IGMP hosts.

Id. at col. 9, ll. 3–16 (emphasis added). We do not see how the standby RPM (and associated ports) could be considered "deactivated" as Petitioner contends, when Rao states that processes on the standby RPM are

"activated."[16] And upon "activation," PIM "hello" messages and "Host Membership Queries" are generated and sent. *See id.* Also, to the extent Petitioner relies on Rao's "delay timer," Petitioner does not explain sufficiently why starting the timer and waiting for it to expire means that the standby RPM was "deactivated" and then "activat[ed]." *See* -989 Pet. 62–63; Ex. 1103 ¶¶ 168, 174.

We credit the testimony of Dr. Olivier, who opines that a person of ordinary skill in the art would have understood that "the standby RPM is never initialized, instead it is kept alive and receives updates from the master. In fact, initializing the RPM would cause it to lose all of its current information." Ex. 2005 ¶ 113. In Rao, "the standby processor's database is synchronized with the master['s] database so it is never in an initialization state." *Id.* (citing Ex. 1024, col. 8, l. 59–col. 9, l. 2). Also, "Rao never teaches that the links are set to inactive, nor could they [be] as doing so may prevent the line card from sending the . . . PIM hellos or Host membership queries as taught by Rao." *Id.* ¶¶ 113–114. And Rao "does not teach that the links would be re-activated after the timer has expired." *Id.* ¶ 113. Dr. Olivier's explanation is consistent with the disclosures of Rao discussed above and is persuasive.[17]

We do not find persuasive the testimony of Dr. Lavian that "[a] standby processor would not be expected to actively analyze and forward multicast stream packets, and so a person of ordinary skill in the art would have recognized that the processor is placed in a deactivate state prior

[16] Neither party proposes an interpretation for the terms "deactivating" and "activating" in claim 8.

[17] Petitioner does not offer any additional declarant testimony with its Reply responding to Dr. Olivier's testimony.

to initialization." *See* Ex. 1103 ¶ 175. Dr. Lavian does not point to any disclosure in Rao indicating that the standby RPM is placed in a different "state." *See In re Am. Acad. Of Sci. Tech Ctr.*, 367 F.3d 1359, 1368 (Fed. Cir. 2004) ("the Board is entitled to weigh the declarations and conclude that the lack of factual corroboration warrants discounting the opinions expressed in the declarations"); *Xerox*, Paper 9 at 15 (expert testimony unsupported by evidence or technical reasoning is entitled to little weight); TPG § I.G (expert testimony cannot take the place of prior art disclosure). If anything, Figure 4 and its accompanying description indicate that standby RPM processes are "activated" at the beginning before generating the queries and starting the timer, as explained above. Dr. Lavian also refers to his earlier analysis regarding Weyman and opines that "a person of ordinary skill in the art would not be motivated to put a processing unit into operation with incorrect forwarding information" and "the reasonable course of action would be to prevent the processing unit from forwarding packets until it is updated to the current multicast state, by deactivating and activating the processing unit." Ex. 1103 ¶ 175. We do not find that argument persuasive for the reasons explained above. *See supra* Section II.F.1.

Absent persuasive explanation and evidence from Petitioner, the preponderance of the evidence before us does not support Petitioner's assertion that Blease, Weyman, and Rao teach or suggest limitation 8[f.ii]. Based on the arguments and evidence submitted in this proceeding, we determine that Petitioner has not proven, by a preponderance of the evidence, that claim 8 would have been obvious based on Blease, Weyman, and Rao under 35 U.S.C. § 103(a).

3. Claim 18

Independent claim 18 is similar to claim 8, but recites a network element rather than a method. Petitioner and Patent Owner argue claims 8 and 18 together. *See* -989 Pet. 62–66; PO Resp. 44–46; Ex. 1103 ¶¶ 171–177. Petitioner has not made a sufficient showing for limitation 8[f.ii] (or, therefore, for similar limitation 18[d.ii]) for the reasons explained above. *See supra* Section II.G.2. Accordingly, Petitioner has not proven, by a preponderance of the evidence, that claim 18 would have been obvious based on Blease, Weyman, and Rao under 35 U.S.C. § 103(a).

H. Additional Obviousness Grounds Based on Blease, Weyman, and Other References (Claims 9 and 10)

Petitioner contends, under 35 U.S.C. § 103(a), that claim 9 is unpatentable over Blease, Weyman, Rao, and Hu; claim 10 is unpatentable over Blease, Weyman, and Deng; and claim 10 is unpatentable over Blease, Weyman, Rao, and Deng.[18] -989 Pet. 58–62, 66–67. Claims 9 and 10 depend from claim 8. Petitioner relies on Hu and Deng for the additional limitations of claims 9 and 10, and does not rely on the references for limitation 8[f.ii]. *See id.* Accordingly, Petitioner has not proven, by a preponderance of the evidence, that claims 9 and 10 are unpatentable based on the asserted grounds in this proceeding. *See supra* Sections II.F.1, II.G.2.

[18] In the Cisco IPR, we determined that Cisco had proven claims 9 and 10 to be unpatentable based on different references (identified as Weyman, Jain, LeMaire, and Li for claim 9, and Weyman, Jain, LeMaire, and Pitcher for claim 10). IPR2024-00506, Paper 38 at 75–77.

III. CONCLUSION[19]

Petitioner has demonstrated, by a preponderance of the evidence, that claims 1, 2, 4, 6, 7, 11, 12, 14, 16, and 17 of the '394 patent are unpatentable on the bases set forth in the following table, but has not demonstrated, by a preponderance of the evidence, that claims 8–10 and 18 of the '394 patent are unpatentable based on the asserted grounds in this proceeding.

In summary:

Claim(s)	35 U.S.C. §	Reference(s)/ Basis	Claim(s) Shown Unpatentable	Claim(s) Not Shown Unpatentable
1, 2, 4, 6, 7, 9, 11, 12, 14, 17	103(a)	Blease, Weyman, Hu[20]	1, 2, 4, 6, 7, 11, 12, 14, 17	9
16	103(a)	Blease, Weyman, Hu, Deng	16	
8, 18	103(a)	Blease, Weyman		8, 18

[19] Should Patent Owner wish to pursue amendment of the challenged claims in a reissue or reexamination proceeding subsequent to the issuance of this Decision, we draw Patent Owner's attention to the April 2019 *Notice Regarding Options for Amendments by Patent Owner Through Reissue or Reexamination During a Pending AIA Trial Proceeding.* *See* 84 Fed. Reg. 16,654 (Apr. 22, 2019). If Patent Owner chooses to file a reissue application or a request for reexamination of the challenged patent, we remind Patent Owner of its continuing obligation to notify the Board of any such related matters in updated mandatory notices. *See* 37 C.F.R. §§ 42.8(a)(3), 42.8(b)(2).

[20] Petitioner's asserted grounds challenging claims 1, 2, 4, 6, 7, 11, 12, 14, 16, and 17 were asserted in IPR2024-00913, and the asserted grounds challenging claims 8–10 and 18 were asserted in IPR2024-00989, which has been consolidated with IPR2024-00913.

Claim(s)	35 U.S.C. §	Reference(s)/ Basis	Claim(s) Shown Unpatentable	Claim(s) Not Shown Unpatentable
10	103(a)	Blease, Weyman, Deng		10
8, 18	103(a)	Blease, Weyman, Rao		8, 18
9	103(a)	Blease, Weyman, Rao, Hu		9
10	103(a)	Blease, Weyman, Rao, Deng		10
Overall Outcome			1, 2, 4, 6, 7, 11, 12, 14, 16, 17	8–10, 18

IV. ORDER

In consideration of the foregoing, it is hereby:

ORDERED that claims 1, 2, 4, 6, 7, 11, 12, 14, 16, and 17 of the ’394 patent are determined to be unpatentable;

FURTHER ORDERED that claims 8–10 and 18 of the ’394 patent are not determined to be unpatentable; and

FURTHER ORDERED that, because this is a Final Written Decision, parties to the proceeding seeking judicial review of the decision must comply with the notice and service requirements of 37 C.F.R. § 90.2.

FOR PETITIONER:

Scott A. McKeown
Michael N. Rader
Victor Cheung
WOLF, GREENFIELD & SACKS, P.C.
smckeown-ptab@wolfgreenfield.com
mrader-ptab@wolfgreenfield.com
vcheung-ptab@wolfgreenfield.com

FOR PATENT OWNER:

James R. Nuttall
Katherine D. Cappaert
Sadaf Misbah
James Winn
STEPTOE LLP
jnuttall@steptoe.com
kcappaert@steptoe.com
smisbah@steptoe.com
jwinn@steptoe.com