US011016456B2

(12) **United States Patent**
Henson et al.

(10) **Patent No.: US 11,016,456 B2**
(45) **Date of Patent: *May 25, 2021**

(54) **METHOD AND SYSTEM FOR DYNAMIC POWER DELIVERY TO A FLEXIBLE DATACENTER USING UNUTILIZED ENERGY SOURCES**

(71) Applicant: **Lancium LLC**, The Woodlands, TX (US)

(72) Inventors: **David Henson**, The Woodlands, TX (US); **Michael McNamara**, The Woodlands, TX (US); **Raymond Cline**, The Woodlands, TX (US)

(73) Assignee: **LANCIUM LLC**, Houston, TX (US)

(*) Notice: Subject to any disclaimer, the term of this patent is extended or adjusted under 35 U.S.C. 154(b) by 0 days.

This patent is subject to a terminal disclaimer.

(21) Appl. No.: **16/482,495**

(22) PCT Filed: **Feb. 13, 2018**

(86) PCT No.: **PCT/US2018/017950**
§ 371 (c)(1),
(2) Date: **Jul. 31, 2019**

(87) PCT Pub. No.: **WO2019/139632**
PCT Pub. Date: **Jul. 18, 2019**

(65) **Prior Publication Data**

US 2020/0379537 A1 Dec. 3, 2020

Related U.S. Application Data

(60) Provisional application No. 62/616,348, filed on Jan. 11, 2018.

(51) **Int. Cl.**
G05B 19/042 (2006.01)
G06F 1/3203 (2019.01)
(Continued)

(52) **U.S. Cl.**
CPC ***G05B 19/042*** (2013.01); ***A01G 9/18*** (2013.01); ***A01G 9/243*** (2013.01); ***A01G 9/246*** (2013.01);
(Continued)

(58) **Field of Classification Search**
CPC G05B 19/042; G05B 2219/2639; H02J 13/00002; H02J 3/381; H02J 13/00;
(Continued)

(56) **References Cited**

U.S. PATENT DOCUMENTS

6,288,456 B1 9/2001 Cratty
6,633,823 B2 10/2003 Bartone et al.
(Continued)

FOREIGN PATENT DOCUMENTS

CN 103163904 A 6/2013
KR 20090012523 A 2/2009
(Continued)

OTHER PUBLICATIONS

Advisory Action dated Nov. 13, 2020 for U.S. Appl. No. 16/529,360, filed Aug. 1, 2019, 182 pages.
(Continued)

Primary Examiner — Michael J Brown
(74) *Attorney, Agent, or Firm* — Barnes & Thornburg LLP

(57) **ABSTRACT**

A flexible datacenter includes a mobile container, a behind-the-meter power input system, a power distribution system, a datacenter control system, a plurality of computing systems, and a climate control system. The datacenter control system modulates power delivery to the plurality of computing systems based on unutilized behind-the-meter power availability or an operational directive. A method of dynamic power delivery to a flexible datacenter using unutilized behind-the-meter power includes monitoring unuti-
(Continued)

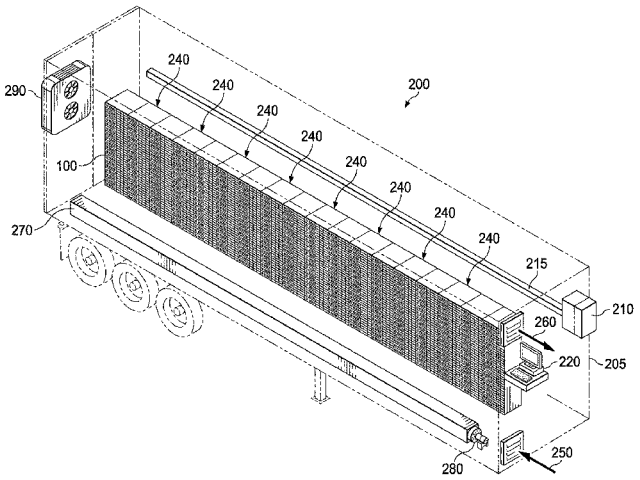

lized behind-the-meter power availability, determining when a datacenter ramp-up condition is met, enabling behind-the-meter power delivery to one or more computing systems when the datacenter ramp-up condition is met, and directing the one or more computing systems to perform predetermined computational operations.

30 Claims, 8 Drawing Sheets

(51) **Int. Cl.**

H02J 3/38	(2006.01)
H02J 13/00	(2006.01)
H02S 40/32	(2014.01)
A01G 9/24	(2006.01)
A01G 9/18	(2006.01)
A01G 9/26	(2006.01)
G06F 9/48	(2006.01)

(52) **U.S. Cl.**
CPC ***A01G 9/247*** (2013.01); ***A01G 9/249*** (2019.05); ***A01G 9/26*** (2013.01); ***G06F 1/3203*** (2013.01); ***G06F 9/4856*** (2013.01); ***H02J 3/381*** (2013.01); ***H02J 3/383*** (2013.01); ***H02J 3/386*** (2013.01); ***H02J 13/00*** (2013.01); ***H02J 13/00002*** (2020.01); ***H02J 13/0017*** (2013.01); ***H02S 40/32*** (2014.12); *G05B 2219/2639* (2013.01); *H02J 2300/24* (2020.01); *H02J 2300/28* (2020.01)

(58) **Field of Classification Search**
CPC H02J 3/383; H02J 3/386; H02J 13/0017; H02J 2300/28; H02J 2300/24; G06F 1/3203; G06F 9/4856; H02S 40/32; H02S 10/00; A01G 9/249; A01G 9/18; A01G 9/243; A01G 9/246; A01G 9/247; A01G 9/26; A01G 9/24; A01G 31/06; Y02E 10/76; Y02E 10/56; Y02P 60/21; Y02P 60/12; Y02A 40/25
USPC 713/300, 310, 320, 330
See application file for complete search history.

(56) **References Cited**

U.S. PATENT DOCUMENTS

7,143,300	B2	11/2006	Potter et al.
7,647,516	B2	1/2010	Ranganathan et al.
7,702,931	B2	4/2010	Goodrum et al.
7,779,276	B2	8/2010	Bolan et al.
7,861,102	B1	12/2010	Ranganathan et al.
7,921,315	B2	4/2011	Langgood et al.
7,970,561	B2	6/2011	Pfeiffer
8,001,403	B2	8/2011	Hamilton et al.
8,006,108	B2	8/2011	Brey et al.
8,214,843	B2	7/2012	Boss et al.
8,374,928	B2	2/2013	Gopisetty et al.
8,447,993	B2	5/2013	Greene et al.
8,571,820	B2	10/2013	Pfeiffer
8,627,123	B2	1/2014	Jain et al.
8,639,392	B2	1/2014	Chassin
8,700,929	B1	4/2014	Weber et al.
8,789,061	B2	7/2014	Pavel et al.
8,799,690	B2	8/2014	Dawson et al.
9,003,211	B2	4/2015	Pfeiffer
9,003,216	B2	4/2015	Sankar et al.
9,026,814	B2	5/2015	Aasheim et al.
9,207,993	B2	12/2015	Jain
9,218,035	B2	12/2015	Li et al.
9,552,234	B2	1/2017	Boldyrev et al.
9,645,596	B1	5/2017	Lee et al.
9,994,118	B2	6/2018	Williams et al.
10,367,353	B1	7/2019	Mcnamara
10,367,535	B2	7/2019	Corse et al.
10,444,818	B1	10/2019	McNamara et al.
10,452,127	B1 *	10/2019	McNamara G06F 1/3206
10,497,072	B2	12/2019	Hooshmand et al.
10,608,433	B1	3/2020	McNamara et al.
10,618,427	B1	4/2020	McNamara et al.
10,637,353	B2	4/2020	Ohyama et al.
2002/0072868	A1	6/2002	Bartone et al.
2002/0158749	A1	10/2002	Ikeda et al.
2003/0074464	A1	4/2003	Bohrer et al.
2004/0117330	A1	6/2004	Ehlers et al.
2005/0203761	A1	9/2005	Barr et al.
2006/0161765	A1	7/2006	Cromer et al.
2008/0030078	A1	2/2008	Whitted et al.
2008/0094797	A1	4/2008	Coglitore et al.
2009/0055665	A1	2/2009	Maglione et al.
2009/0070611	A1	3/2009	Bower, III et al.
2009/0078401	A1	3/2009	Cichanowicz
2009/0089595	A1	4/2009	Brey et al.
2010/0211810	A1	8/2010	Zacho
2010/0235004	A1	9/2010	Thind
2010/0280675	A1	11/2010	Tate, Jr. et al.
2010/0328849	A1	12/2010	Ewing et al.
2011/0072289	A1	3/2011	Kato
2011/0238342	A1	9/2011	Pfeiffer
2012/0000121	A1	1/2012	Swann
2012/0072745	A1	3/2012	Ahluwalia et al.
2012/0300524	A1	11/2012	Fornage et al.
2012/0306271	A1	12/2012	Kuriyama
2012/0324259	A1	12/2012	Aasheim et al.
2013/0006401	A1	1/2013	Shan
2013/0063991	A1	3/2013	Xiao et al.
2013/0086404	A1	4/2013	Sankar et al.
2013/0187464	A1	7/2013	Smith et al.
2013/0227139	A1	8/2013	Suffling
2013/0306276	A1	11/2013	Duchesneau
2014/0070756	A1	3/2014	Kearns et al.
2014/0137468	A1	5/2014	Ching
2014/0180886	A1	6/2014	Forbes, Jr.
2014/0379156	A1	12/2014	Kamel et al.
2015/0012113	A1	1/2015	Celebi
2015/0121113	A1	4/2015	Ramamurthy et al.
2015/0155712	A1	6/2015	Mondal
2015/0212122	A1	7/2015	Sobotka et al.
2015/0229227	A1	8/2015	Aeloiza et al.
2015/0277410	A1	10/2015	Gupta et al.
2015/0278968	A1	10/2015	Steven et al.
2015/0288183	A1	10/2015	Villanueva, Jr. et al.
2015/0372538	A1	12/2015	Siegler et al.
2016/0006066	A1	1/2016	Robertson
2016/0011617	A1	1/2016	Liu et al.
2016/0043552	A1	2/2016	Villanueva, Jr. et al.
2016/0126783	A1	5/2016	Cheng et al.
2016/0170469	A1	6/2016	Sehgal et al.
2016/0172900	A1	6/2016	Welch, Jr.
2016/0187906	A1	6/2016	Bodas et al.
2016/0198656	A1	7/2016	McNamara et al.
2016/0212954	A1	7/2016	Argento
2016/0324077	A1	11/2016	Frantzen et al.
2017/0023969	A1	1/2017	Shows et al.
2017/0104336	A1	4/2017	Elbsat et al.
2017/0261949	A1	9/2017	Hoffmann et al.
2017/0373500	A1	12/2017	Shafi et al.
2018/0026478	A1	1/2018	Peloso
2018/0144414	A1	5/2018	Lee et al.
2018/0202825	A1	7/2018	You et al.
2018/0240112	A1	8/2018	Castinado et al.
2018/0366978	A1	12/2018	Matan et al.
2018/0367320	A1	12/2018	Montalvo
2019/0052094	A1	2/2019	Pmsvvsv et al.
2019/0168630	A1	6/2019	Mrlik et al.
2019/0258307	A1	8/2019	Shaikh et al.
2019/0280521	A1	9/2019	Lundstrom et al.
2019/0318327	A1	10/2019	Sowell et al.

(56) **References Cited**

U.S. PATENT DOCUMENTS

2019/0324820 A1 10/2019 Krishnan et al.
2020/0073466 A1 3/2020 Walsh

FOREIGN PATENT DOCUMENTS

WO 2015199629 A1 12/2015
WO WO-2019139633 A1 7/2019

OTHER PUBLICATIONS

Advisory Action dated Oct. 22, 2020 for U.S. Appl. No. 16/528,348, filed Jul. 31, 2019, 3 pages.
Bakar.N et al., "Microgrid and Load Shedding Scheme During Islanded Mode: a Review," Elsevier, May 26, 2020, vol. 71, pp. 161-169. https://www.sciencedirect.com/science/article/pii/S1364032116311030.
Choi.Y et al., "Optimal Load Shedding for Maximizing Satisfaction in an Islanded Microgrid," Energies, 2017, vol. 10, pp. 45. doi: 10.3390/en10010045.
Final Office Action dated Jul. 23, 2020 on for U.S. Appl. No. 16/132,062, filed Sep. 14, 2018, 26 pages.
Final Office Action dated May 19, 2020 for U.S. Appl. No. 16/809,111, filed Mar. 4, 2020, 36 pages.
Final Office Action dated Jun. 3, 2020 for U.S. Appl. No. 16/528,348, filed Jul. 31, 2019, 33 pages.
Final Office Action dated May 28, 2020 for U.S. Appl. No. 16/132,098, filed Sep. 14, 2018, 24 pages.
Final Office Action dated Jul. 29, 2020 for U.S. Appl. No. 16/132,092, filed Sep. 14, 2018, 5 pages.
Gao.H et al., "Dynamic Load Shedding for an Islanded Microgrid With Limited Generation Resources," IET Generation, Transmission & Distribution, Sep. 2016, vol. 10(12), pp. 2953-2961. doi: 10.1049/iet-gtd.2015.1452.
International Search Report and Written Opinion of PCT Application No. PCT/US2020/044536, dated Aug. 26, 2020, 24 pages.
International Search Report and Written Opinion of PCT Application No. PCT/US2020/044539, dated Aug. 26, 2020, 7 pages.
John, "Stem and CPower to Combine Behind-the-Meter Batteries and Demand Response," Energy Storage, Aug. 8, 2017, 1 page.
Lim.Y et al., "Distributed Load-shedding System for Agent-based Autonomous Microgrid Operations," Energies, 2014, vol. 7(1), pp. 385-401. doi: 10.3390/en7010385.
Liu.W et al., "Improved Average Consensus Algorithm Based Distributed Cost Optimization for Loading Shedding of Autonomous Microgrids," International Journal of Electrical Power & Energy Systems, Dec. 2015, vol. 73, pp. 89-96. doi: 10.1016/j.ijepes.2015.04.006.
Mousavizadeh.S et al., "A Linear Two-stage Method for Resiliency Analysis in Distribution Systems Considering Renewable Energy and Demand Response Resources," Elsevier, 2017, pp. 443-460. doi: 10.1016/j.apenergy.2017.11.067.
Non-Final Office Action dated Jun. 12, 2020 for U.S. Appl. No. 16/803,109, filed Dec. 27, 2020, 31 pages.
Non-Final Office Action dated May 14, 2020 on for U.S. Appl. No. 16/834,987, filed Mar. 30, 2020, 30 pages.
Notice of Allowance dated Oct. 13, 2020 on for U.S. Appl. No. 16/132,098, filed Sep. 14, 2018, 5 pages.
Notice of Allowance dated Jun. 12, 2020 on for U.S. Appl. No. 16/834,987, filed Mar. 30, 2020, 9 pages.
Notice of Allowance dated Jan. 13, 2021 on for U.S. Appl. No. 16/175,246, filed Oct. 30, 2018, 5 pages.
Notice of Allowance dated Sep. 17, 2020 on for U.S. Appl. No. 16/175,246, filed Oct. 30, 2018, 5 pages.
Notice of Allowance dated Nov. 19, 2020 on for U.S. Appl. No. 16/132,062, filed Sep. 14, 2018, 7 pages.
Notice of Allowance dated Jan. 27, 2021 on for U.S. Appl. No. 16/132,092, filed Sep. 14, 2018, 8 pages.
Notice of Allowance dated Jul. 29, 2020 on for U.S. Appl. No. 16/132,011, filed Sep. 14, 2018, 5 pages.
Notice of Allowance dated Oct. 29, 2020 on for U.S. Appl. No. 16/132,092, filed Sep. 14, 2018, 8 pages.
Notice of Allowance dated Jan. 25, 2021 on for U.S. Appl. No. 16/132,098, filed Sep. 14, 2018, 5 pages.
Pashajavid.E et al., "A Multimode Supervisory Control Scheme for Coupling Remote Droop-Regulated Microgrids," IEEE Transactions on Smart Grid, May 26, 2020, vol. 9(5), pp. 5381-5392. https://ieeexplore.ieee.org/abstract/document/7888570/.
Pashajavid.E et al., "Frequency Support for Remote Microgrid Systems With Intermittent Distributed Energy Resources—A Two-level Hierarchical Strategy," IEEE Systems Journal, May 26, 2020, vol. 12(3), pp. 2760-2771. https://ieeexplore.ieee.org/abstract/document/7862156/.
Rudez.U and Mihalic.R, "Predictive Underfrequency Load Shedding Scheme for Islanded Power Systems With Renewable Generation," Electric Power Systems Research, May 2015, vol. 126, pp. 21-28. doi: 10.1016/j.epsr.2015.04.017.
Wilson, "Utility-Scale Deployment Project of Behind-the-Meter Energy Storage for Use in Ancillary Services, Energy Resiliency, Grid Infrastructure Investment Deferment, and Demand-Response Integration," Portland State University Thesis, 154 pages (Jun. 9, 2016).
Xu.Q et al., "Distributed Load Shedding for Microgrid With Compensation Support via Wireless Network," IET Generation, Transmission & Distribution, May 2018, vol. 12(9), pp. 2006-2018. doi: 10.1049/iet-gtd.2017.1029.
Zhou.Q et al., "Two-Stage Load Shedding for Secondary Control in Hierarchical Operation of Islanded Microgrids," IEEE Transactions on Smart Grid, May 2019, vol. 10(3), pp. 3103-3111. doi: 10.1109/TSG.2018.2817738.
Final Office Action dated Apr. 17, 2020 for U.S. Appl. No. 16/529,402, filed Aug. 1, 2019, 59 pages.
Hayes, Adam S., "A Cost of Production Model for Bitcoin," Department of Economics, The New School for Social Research, Mar. 2015, 5 pages.
Non-Final Office Action dated Feb. 20, 2020 for U.S. Appl. No. 16/702,894, filed Dec. 4, 2019, 30 pages.
Non-Final Office Action dated Apr. 2, 2020 on for U.S. Appl. No. 16/132,011, filed Sep. 14, 2018, 5 pages.
Non-Final Office Action dated Mar. 30, 2020 for U.S. Appl. No. 16/132,092, filed Sep. 14, 2018, 46 pages.
Notice of Allowance dated Mar. 2, 2020, for U.S. Appl. No. 16/596,190, filed Oct. 8, 2019, 15 pages.
Notice of Allowance dated Apr. 6, 2020, for U.S. Appl. No. 16/175,246, filed Oct. 30, 2018, 12 pages.
Final Office Action dated Oct. 1, 2019 for U.S. Appl. No. 16/175,246, filed Oct. 30, 2018, 18 pages.
Notice of Allowance dated Aug. 15, 2019, for U.S. Appl. No. 16/175,146, filed Oct. 30, 2018, 17 pages.
Wilson, J., "A Utility-Scale Deployment Project of Behind-the-Meter Energy Storage for Use in Ancillary Services, Energy Resiliency, Grid Infrastructure Investment Deferment, and Demand-Response Integration," Portland State University, 2016.
International Search Report and Written Opinion of PCT Application No. PCT/US20/57686, dated Feb. 22, 2021, 67 pages.
ISO, "Distributed Energy Resources Roadmap for New York's Wholesale Electricity Markets," Distributed Energy Resource Roadmap, Jan. 2017, pp. 1-39. [retrieved on Dec. 15, 2020], Retrieved from the Internet:< url:< a="" "" href="https://www.nyiso.com/documents/20142/1391862/Distributed_Energy_Resources_Roadmap.pdf/ec0b3b64-4de2-73e0-ffef-49a4b8b1">https://www.nyiso.com/documents/20142/1391862/Distributed_Energy_Resources_Roadmap.pdf/ec0b3b64-4de2-73e0-ffef-49a4b8b1 b3ca.</url:>.
Non-Final Office Action dated Feb. 4, 2021 on for U.S. Appl. No. 16/284,610, filed Feb. 25, 2019, 9 pages.
Non-Final Office Action dated Feb. 12, 2021 on for U.S. Appl. No. 16/528,348, filed Jul. 31, 2019, 54 pages.
Notice of Allowance dated Feb. 8, 2021 on for U.S. Appl. No. 16/132,062, filed Sep. 14, 2018, 21 pages.
Notice of Allowance dated Feb. 8, 2021 on for U.S. Appl. No. 16/803,109, filed Feb. 27, 2020, 29 pages.

(56) **References Cited**

OTHER PUBLICATIONS

Notice of Allowance dated Feb. 8, 2021 on for U.S. Appl. No. 16/834,987, filed Mar. 30, 2020, 180 pages.
Notice of Allowance dated Jan. 25, 2021 on for U.S. Appl. No. 16/702,894, filed Dec. 4, 2019, 24 pages.
Co-pending U.S. Appl. No. 16/132,092, filed Sep. 14, 2018.
Co-pending U.S. Appl. No. 16/175,246, filed Oct. 30, 2018.
Notice of Allowance dated Jan. 27, 2020, for U.S. Appl. No. 16/702,931, filed Dec. 4, 2019, 23 pages.
Ghamkhari et al., "Optimal Integration of Renewable Energy Resources in Data Centers with Behind-the-Meter Renewable Generator," Department of Electrical and Computer Engineering Texas Tech University, 2012, pp. 3340-3444.
Non-Final Office Action dated Dec. 5, 2019 for U.S. Appl. No. 16/529,360, filed Aug. 1, 2019, 72 pages.
Non-Final Office Action dated Dec. 10, 2019 for U.S. Appl. No. 16/596,190, filed Oct. 8, 2019, 72 pages.
Non-Final Office Action dated Nov. 14, 2019 for U.S. Appl. No. 16/132,098, filed Sep. 14, 2018, 25 pages.
Non-Final Office Action dated Nov. 21, 2019 for U.S. Appl. No. 16/529,402, filed Aug. 1, 2019, 57 pages.
Non-Final Office Action dated Dec. 11, 2019 on for U.S. Appl. No. 16/132,062, filed Sep. 14, 2018, 17 pages.
Non-Final Office Action dated Dec. 10, 2019 for U.S. Appl. No. 16/528,348, filed Oct. 8, 2019, 33 pages.
Rahimi, Farrokh, "Using a Transactive Energy Framework," IEEE Electrification Magazine, Dec. 2016, pp. 23-29.
Bird L., et al., "Wind and Solar Energy Curtailment: Experience and Practices in the United States," National Renewable Energy Lab (NREL), Technical Report NREL/TP-6A20-60983, Mar. 2014, 58 pages.
EPEX Spot, "How They Occur, What They Mean," https://www.epexspot.com/en/company-info/basics_of_the_power_market/negative_prices, 2018, 2 pages.
International Search Report and Written Opinion of PCT Application No. PCT/US2018/017955, dated Apr. 30, 2018, 22 pages.
International Search Report and Written Opinion of PCT Application No. PCT/US2018/017950, dated May 31, 2018, 15 pages.
Notice of Allowance dated Apr. 2, 2019, for U.S. Appl. No. 16/175,335, filed Oct. 30, 2018, 12 pages.
Notice of Allowance dated Jul. 29, 2019, for U.S. Appl. No. 16/245,532, filed Jan. 11, 2019, 13 pages.
Soluna., "Powering the Block Chain," Aug. 2018, version 1.1, 29 pages.

* cited by examiner

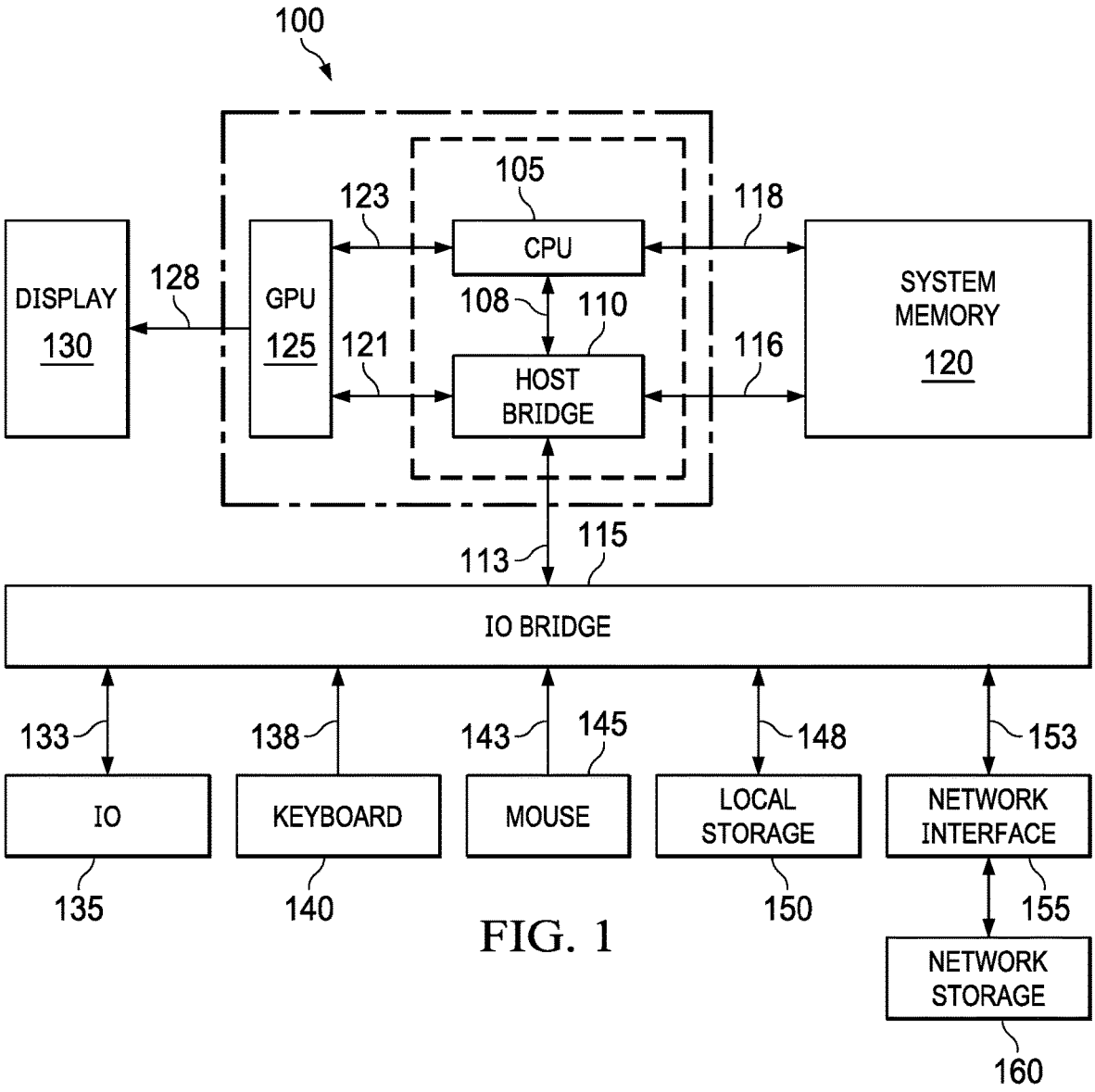
100
105
123
118
CPU
DISPLAY
130
128
GPU
125
108
110
121
116
HOST
BRIDGE
SYSTEM
MEMORY
120
113
115
IO BRIDGE
133
138
143
145
148
153
IO
KEYBOARD
MOUSE
LOCAL
STORAGE
NETWORK
INTERFACE
135
140
150
155
NETWORK
STORAGE
160

FIG. 1

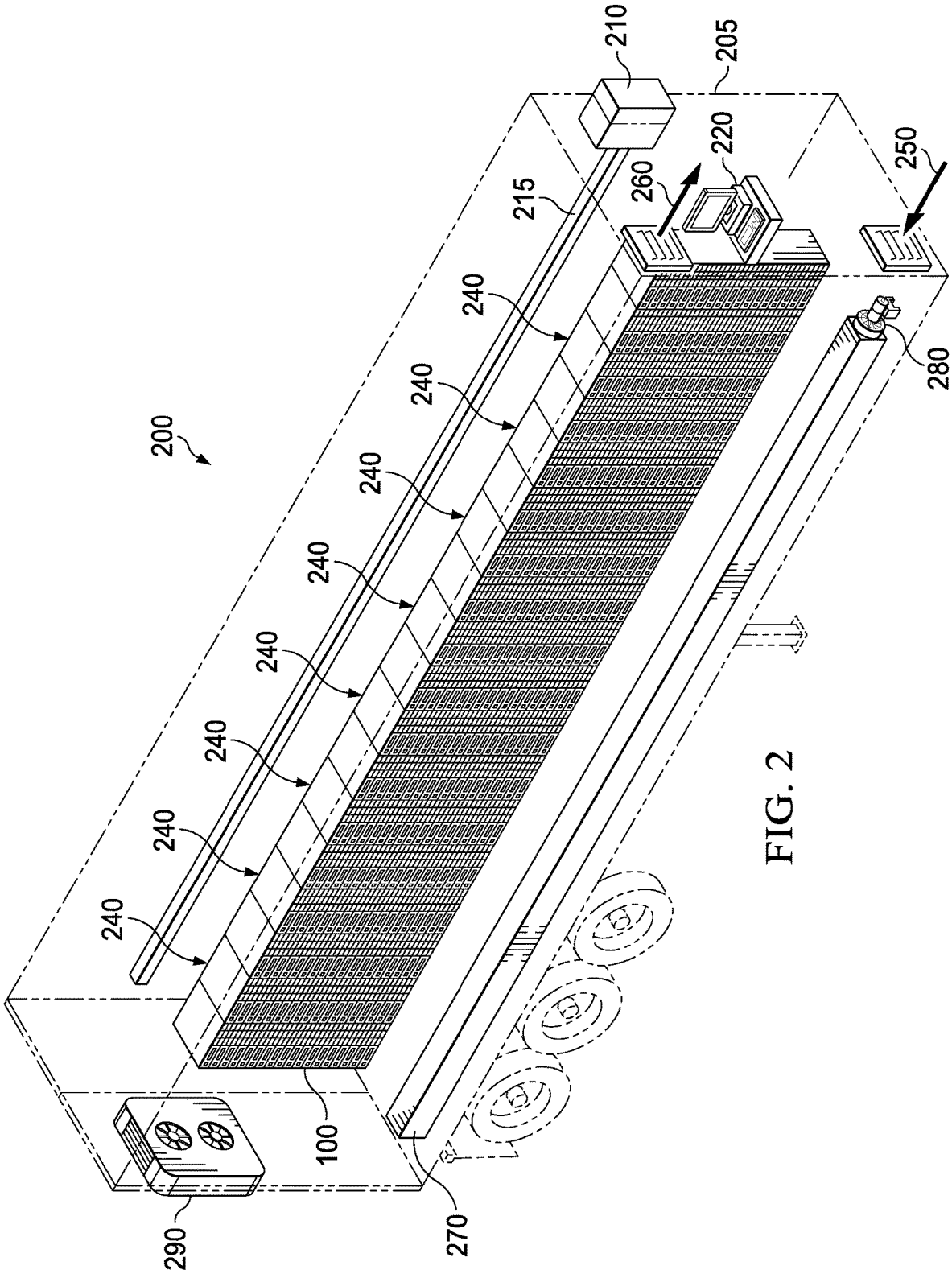
200
210
205
215
220
250
260
280
240
240
240
240
240
240
240
240
100
290
270

FIG. 2

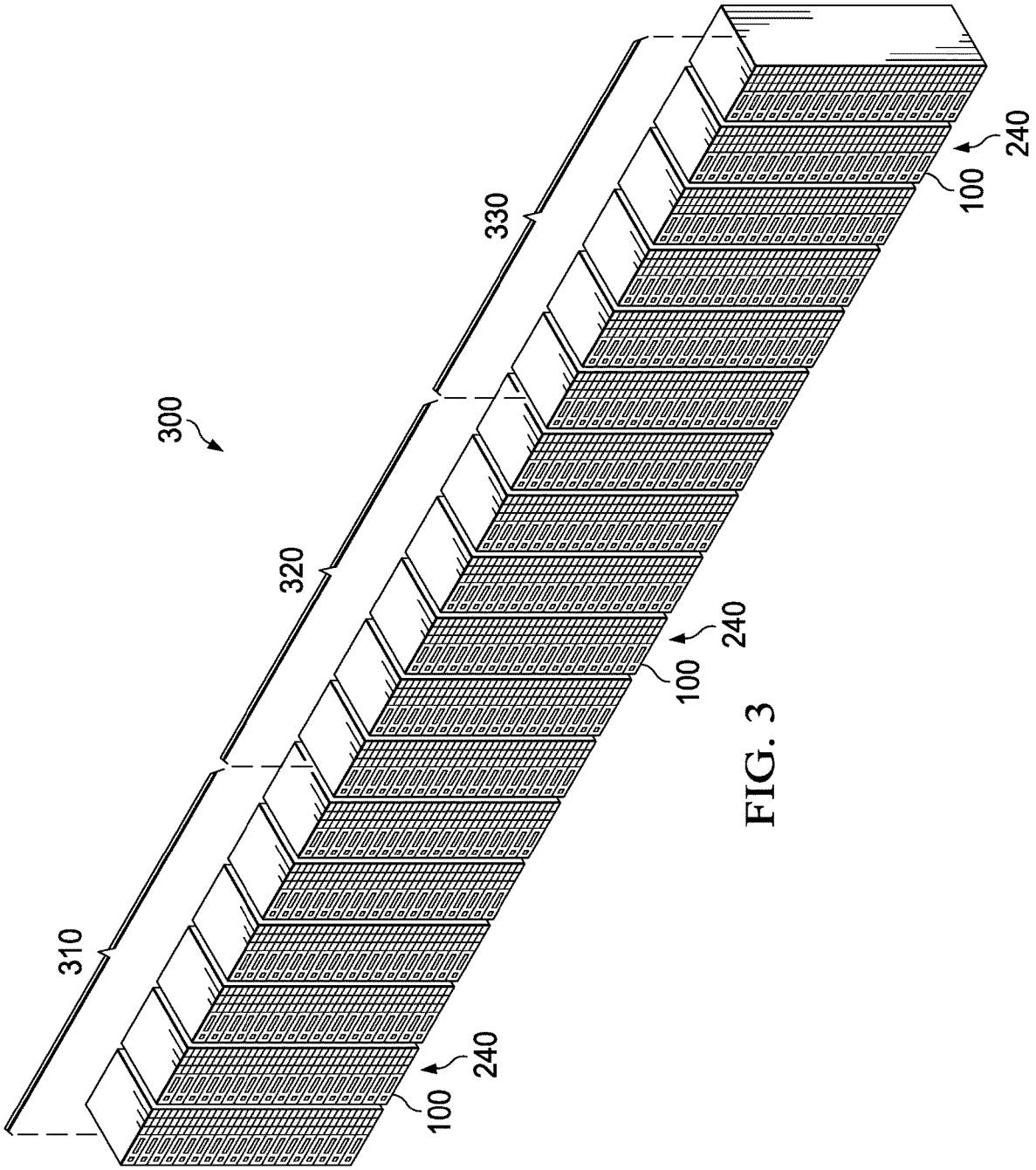

FIG. 3

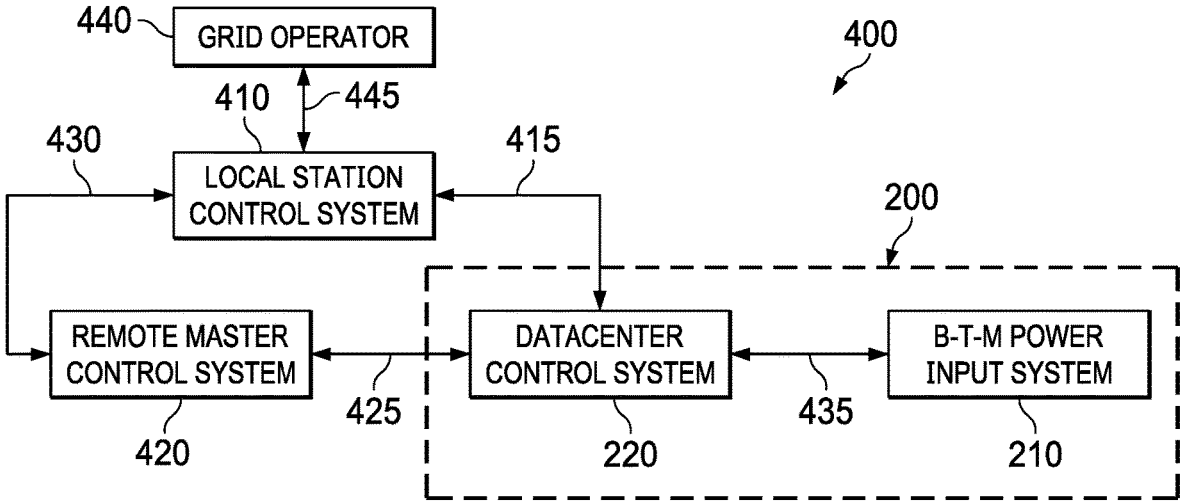
440
GRID OPERATOR
400
410
445
430
415
LOCAL STATION CONTROL SYSTEM
200
REMOTE MASTER CONTROL SYSTEM
DATACENTER CONTROL SYSTEM
B-T-M POWER INPUT SYSTEM
425
435
420
220
210

FIG. 4

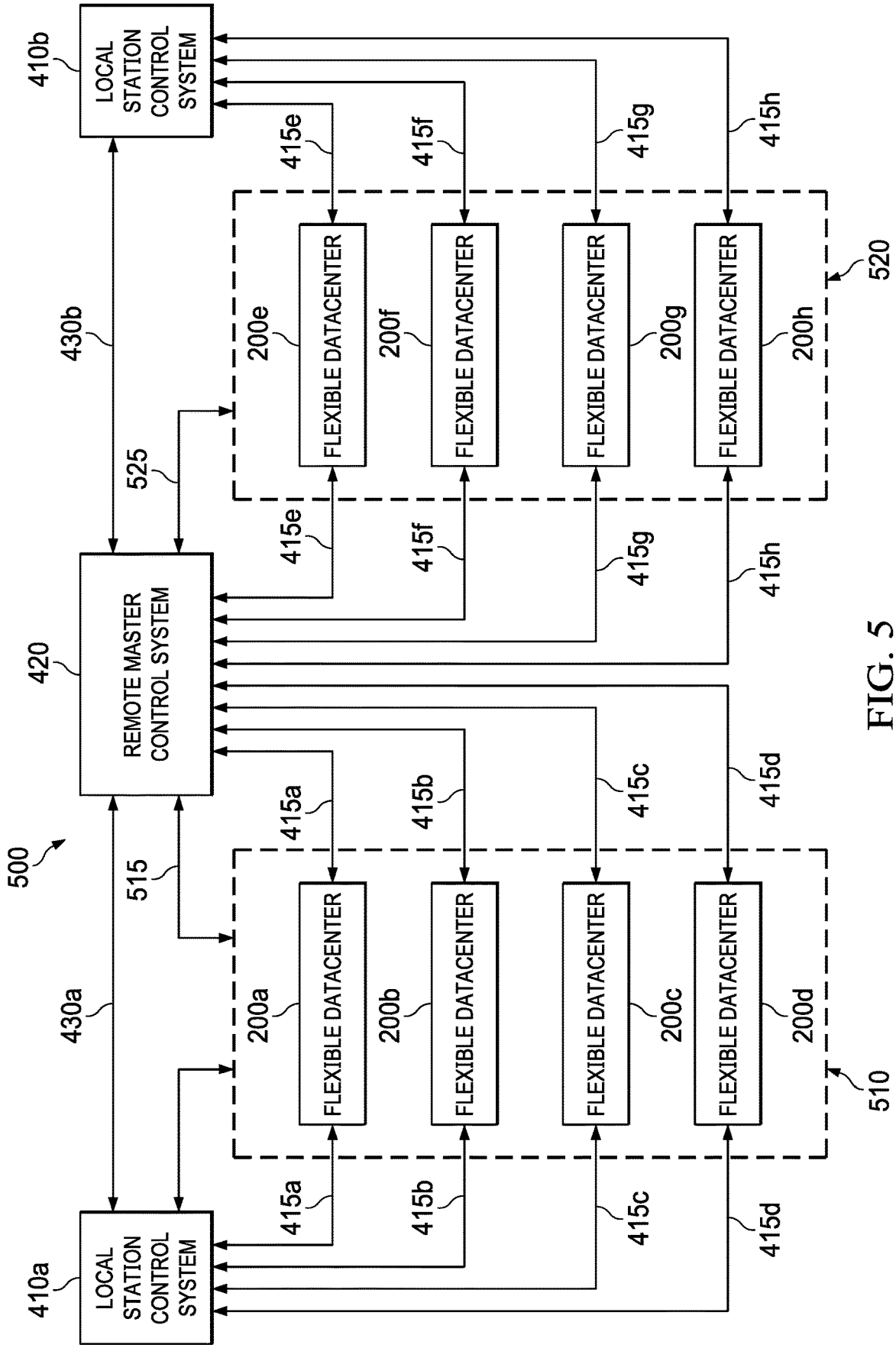
500
410a
LOCAL STATION CONTROL SYSTEM
410b
LOCAL STATION CONTROL SYSTEM
420
REMOTE MASTER CONTROL SYSTEM
430a
430b
515
525
510
520
200a
200b
200c
200d
200e
200f
200g
200h
FLEXIBLE DATACENTER
415a
415b
415c
415d
415e
415f
415g
415h

FIG. 5

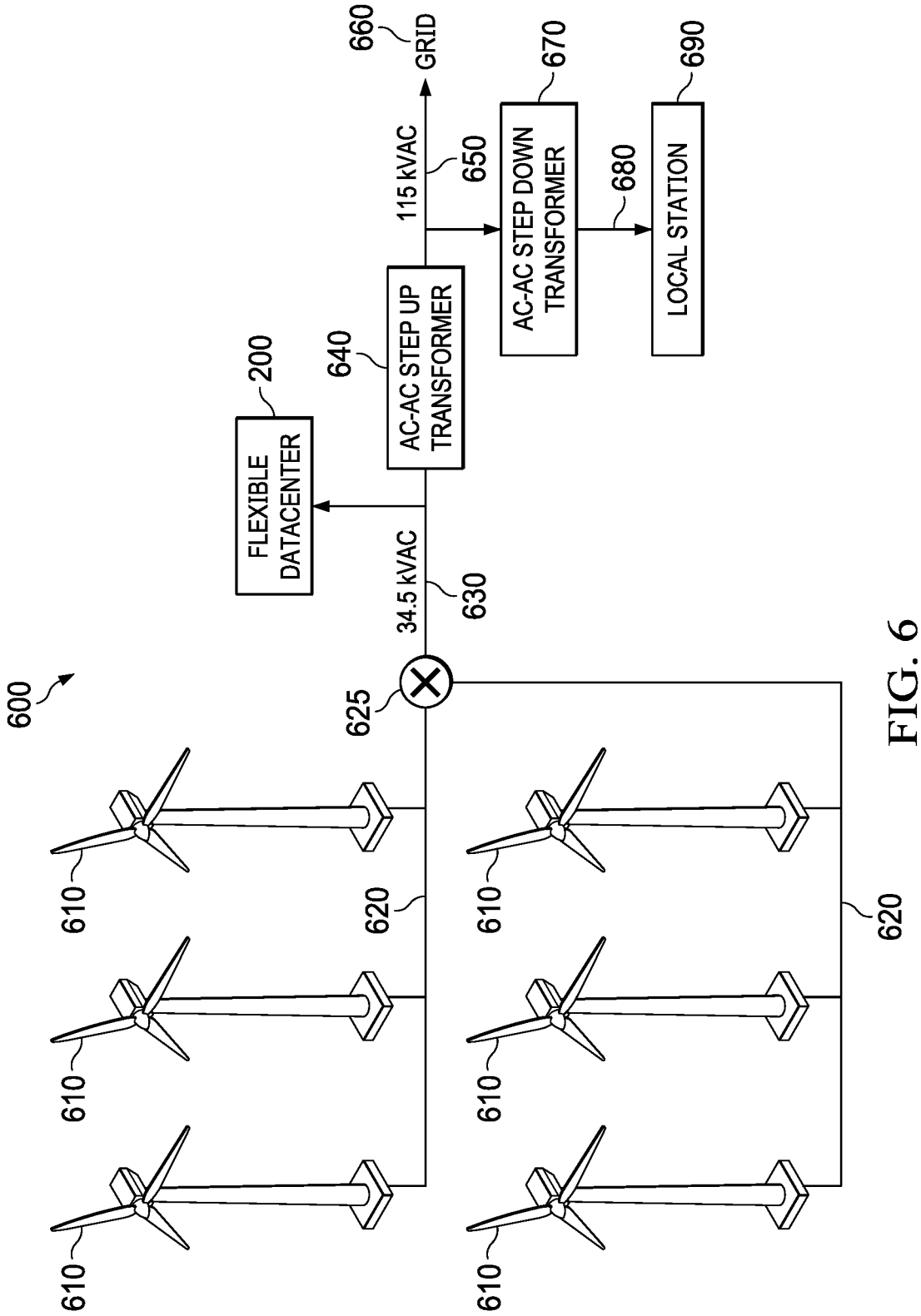
600
610
610
610
610
610
610
620
620
625
630
34.5 kVAC
200
FLEXIBLE DATACENTER
640
AC-AC STEP UP TRANSFORMER
650
115 kVAC
660
GRID
670
AC-AC STEP DOWN TRANSFORMER
680
690
LOCAL STATION

FIG. 6

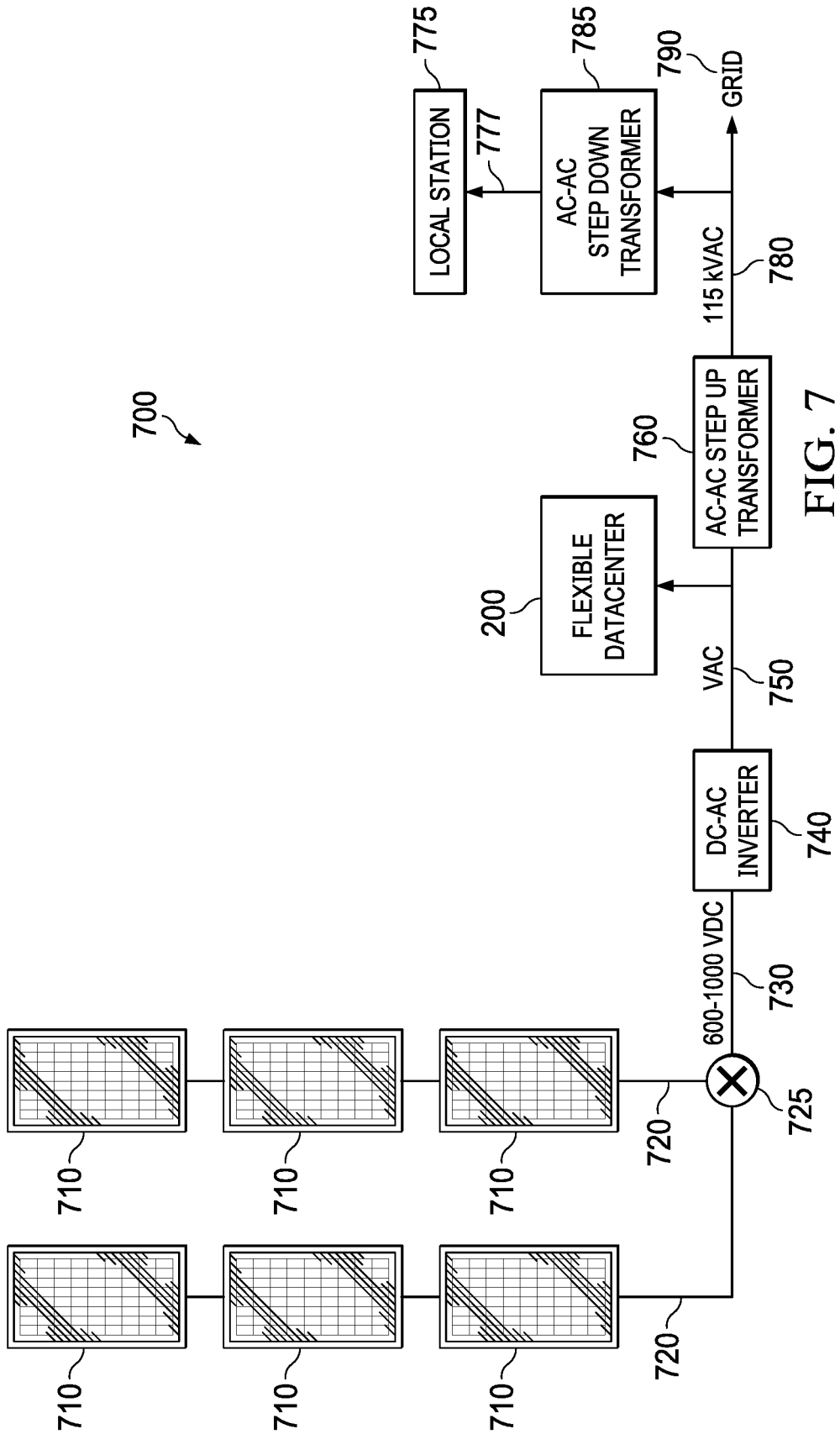
700
710
710
710
710
710
710
720
720
725
600-1000 VDC
730
DC-AC INVERTER
740
VAC
750
FLEXIBLE DATACENTER
200
AC-AC STEP UP TRANSFORMER
760
115 kVAC
780
LOCAL STATION
775
777
AC-AC STEP DOWN TRANSFORMER
785
790
GRID

FIG. 7

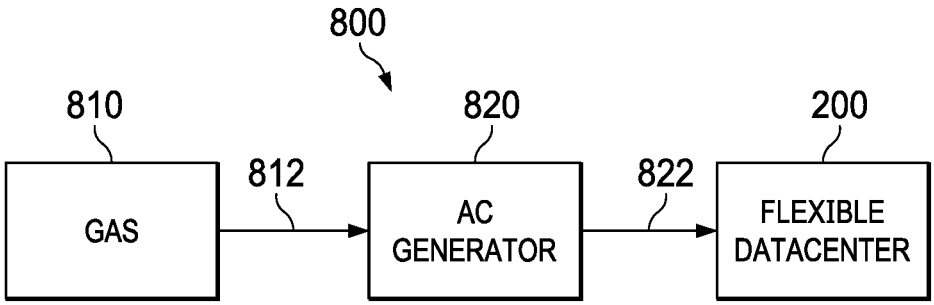
800
810
GAS
812
820
AC GENERATOR
822
200
FLEXIBLE DATACENTER

FIG. 8

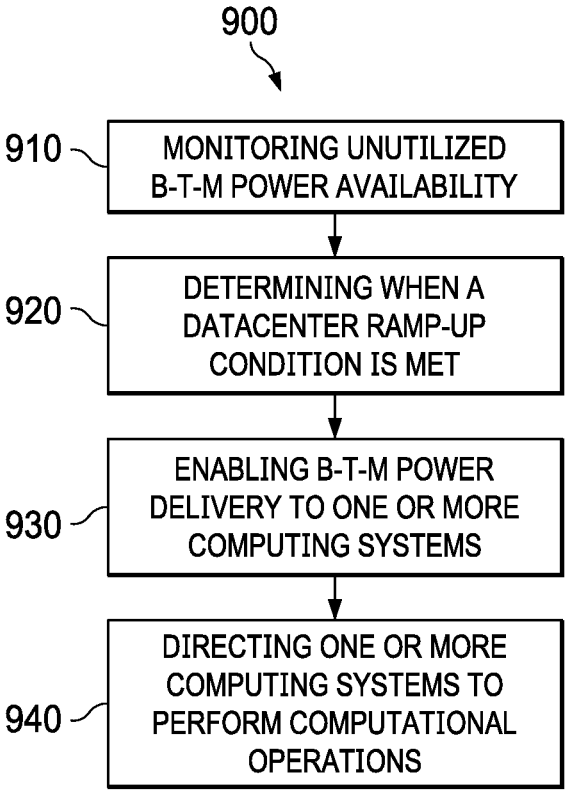
900
910
MONITORING UNUTILIZED B-T-M POWER AVAILABILITY
920
DETERMINING WHEN A DATACENTER RAMP-UP CONDITION IS MET
930
ENABLING B-T-M POWER DELIVERY TO ONE OR MORE COMPUTING SYSTEMS
940
DIRECTING ONE OR MORE COMPUTING SYSTEMS TO PERFORM COMPUTATIONAL OPERATIONS

FIG. 9

METHOD AND SYSTEM FOR DYNAMIC POWER DELIVERY TO A FLEXIBLE DATACENTER USING UNUTILIZED ENERGY SOURCES

CROSS-REFERENCE TO RELATED APPLICATIONS

This application is a U.S. national phase application under 35 USC 371 of International Patent Application no. PCT/US2018/017950, filed Feb. 13, 2018, which claims the benefit of U.S. Patent Application No. 62/616,348, filed Jan. 11, 2018.

BACKGROUND OF THE INVENTION

Blockchain technology was originally conceived of as an open and distributed system for securely conducting transactions with cryptographic currency. However, the foundational principle of blockchain technology is the ability to securely transact information of any type or kind between anonymous parties without intermediaries or a centralized trust authority. As such, blockchain technology finds application outside the realm of cryptocurrency and is widely considered one of the more robust and secure means of transacting information in the computer sciences.

In typical blockchain implementations, each participating party creates a digital identity, or wallet, which includes a pair of cryptographic keys used to transact information securely and anonymously with the blockchain. The blockchain may be thought of as a constantly growing database of all prior transaction information that is securely and coherently replicated across all nodes of a peer-to-peer blockchain network. The blockchain includes a sequence of blocks, where each block includes a bundle of transactions and other data including a hash of the prior block in the chain. As such, each block in the blockchain is mathematically related to the prior block, protecting the integrity of the blockchain from the most recently added block to the genesis block in the chain. Because anyone may participate in the curation of the blockchain, once a block is added, it becomes a permanent and immutable part of the blockchain. Thus, the blockchain stores transactions in a manner that prevents the transactions from being altered or otherwise corrupted, unless all subsequent blocks in the blockchain are also altered. The immutability of the blockchain makes the malicious alteration of a block exceptionally difficult, if not impossible, and at the very least makes it easy to detect and deter any such attempt before being accepted and replicated across the blockchain network.

Each transacting party of the blockchain uses a pair of cryptographic keys to anonymously transact information. The private key is a random number maintained in secrecy by the party holder that is used to derive a public key and sign information. The private key and the public key are mathematically related such that anyone holding the public key may verify that information signed with the private key originated from the holder of the private key. When an initiating party wishes to transact information, the information is signed with the initiating party's private key and broadcast to the blockchain network. A blockchain miner uses the initiating party's public key to verify that the initiating party initiated, or signed, the transaction. Once the initiating party's signature is validated, the transaction is validated, added to the next block in the blockchain, and replicated across all nodes.

The computational overhead of the blockchain is largely due to hashing functions used by blockchain miners to discover new blocks. While computationally intensive, the work performed by miners is critically important to the functionality of the blockchain. When an initiating party's transaction request has been lodged and the signatures validated, the transaction request is pooled in the blockchain network. Blockchain miners validate transactions and compete to discover a new block to be added to the blockchain. In order to add a newly discovered block to the blockchain, the blockchain miner must provide a cryptographic proof of the discovered block. To create the proof, the miner inputs the hash value of the prior block in the blockchain, the candidate block to be added, and a random number, commonly referred to as the nonce, to a hash function. The hash function takes input of any length and outputs an alphanumeric string of fixed length, commonly referred to as a hash, which uniquely identifies the input. However, the blockchain algorithm requires that the hash start with a certain number of leading zeros as determined by the current level of prescribed difficulty. The blockchain network modulates the level of difficulty for block discovery, by varying the number of leading zeros required in the calculated hash, based on the amount of computing power in the blockchain network.

As more computational capacity has come online, the hash rate has increased dramatically. In an effort to keep the block discovery time constant, the blockchain network modulates difficulty every 2016 blocks discovered. If the blockchain network hash rate is too high and the amount of time taken to discover a new block is less than 10 minutes, the difficulty is increased proportionally to increase the block discovery time to 10 minutes. Similarly, if the blockchain hash rate is too low and the amount of time taken to discover a new block is more than 10 minutes, the difficulty is increased proportionally to reduce the block discovery time to 10 minutes. Because there is no way to predict what hash value a given set of input data will generate, miners often have to execute the hash function a substantial number of times, each time inputting a new nonce, to generate a new hash value. When a miner is the first to obtain a hash value having the correct number of leading zeros, they broadcast the newly discovered block to the blockchain network and the blockchain is replicated across all nodes.

BRIEF SUMMARY OF THE INVENTION

According to one aspect of one or more embodiments of the present invention, a flexible datacenter includes a mobile container, a behind-the-meter power input system, a power distribution system, a datacenter control system, a plurality of computing systems, and a climate control system. The datacenter control system modulates power delivery to the plurality of computing systems based on unutilized behind-the-meter power availability or an operational directive.

According to one aspect of one or more embodiments of the present invention, a method of dynamic power delivery to a flexible datacenter using unutilized behind-the-meter power includes monitoring unutilized behind-the-meter power availability, determining when a datacenter ramp-up condition is met, enabling behind-the-meter power delivery to one or more computing systems when the datacenter ramp-up condition is met, and directing the one or more computing systems to perform predetermined computational operations.

Other aspects of the present invention will be apparent from the following description and claims.

BRIEF DESCRIPTION OF THE DRAWINGS

FIG. **1** shows a computing system in accordance with one or more embodiments of the present invention.

FIG. **2** shows a flexible datacenter in accordance with one or more embodiments of the present invention.

FIG. **3** shows a three-phase power distribution of a flexible datacenter in accordance with one or more embodiments of the present invention.

FIG. **4** shows a control distribution scheme of a flexible datacenter in accordance with one or more embodiments of the present invention.

FIG. **5** shows a control distribution scheme of a fleet of flexible datacenters in accordance with one or more embodiments of the present invention.

FIG. **6** shows a flexible datacenter powered by one or more wind turbines in accordance with one or more embodiments of the present invention.

FIG. **7** shows a flexible datacenter powered by one or more solar panels in accordance with one or more embodiments of the present invention.

FIG. **8** shows a flexible datacenter powered by flare gas in accordance with one or more embodiments of the present invention.

FIG. **9** shows a method of dynamic power delivery to a flexible datacenter using unutilized behind-the-meter power in accordance with one or more embodiments of the present invention.

DETAILED DESCRIPTION OF THE INVENTION

One or more embodiments of the present invention are described in detail with reference to the accompanying figures. For consistency, like elements in the various figures are denoted by like reference numerals. In the following detailed description of the present invention, specific details are set forth in order to provide a thorough understanding of the present invention. In other instances, well-known features to one having ordinary skill in the art are not described to avoid obscuring the description of the present invention.

Blockchain miners are typically compensated for their efforts through either a discovery fee or a fee paid by one or more of the transacting parties. Consequently, more and more computing resources are coming online to compete for these fees. As the number of computing resources increases, the blockchain network modulates the difficulty level, requiring hash values with more leading zeros. In essence, the increased difficulty means more hashing operations are required to find a valid hash. As such, there is an increasing number of computing resources executing an increasing number of hash functions that do not result in the discovery of a valid hash, yet still consume a substantial amount of power.

The intensive computational demand of blockchain applications makes the widespread adoption of blockchain technology inefficient and unsustainable from an energy and environmental perspective. In certain blockchain applications, with limited participation, roughly 5 quintillion 256-bit cryptographic hashes are created each and every second of every day. While it is difficult to determine how much energy is required for that computational task, it is estimated to be in excess of 500 megawatts, the vast majority of which is sourced from fossil fuels. The majority of blockchain mining operations are currently being conducted in the People's Republic of China and powered by coal-fired energy. As blockchain technology proliferates, there is concern that the energy required to sustain such blockchain applications could exceed that of a developed country.

While future versions of blockchain technology may improve power consumption for various blockchain operations, including hashing functions, industry efforts have focused on the development of central processing units ("CPUs"), graphics processing units ("GPUs"), and application specific integrated circuits ("ASICs") that are specifically designed to perform blockchain operations in a more efficient manner. While such efforts are beneficial, the issue remains, the widespread adoption of blockchain technology will require substantially more power than is economically and environmentally feasible.

Accordingly, in one or more embodiments of the present invention, a method and system for dynamic power delivery to a flexible datacenter uses unutilized behind-the-meter power sources without transmission and distribution costs. The flexible datacenter may be configured to modulate power delivery to one or more computing systems based on the availability of unutilized behind-the-meter power or an operational directive. For example, the flexible datacenter may ramp-up to a fully online status, ramp-down to a fully offline status, or dynamically reduce power consumption, act a load balancer, or adjust the power factor. Advantageously, the flexible datacenter may perform computational operations, such as blockchain hashing operations, with little to no energy costs, using clean and renewable energy that would otherwise be wasted.

FIG. **1** shows a computing system **100** in accordance with one or more embodiments of the present invention. Computing system **100** may include one or more central processing units (singular "CPU" or plural "CPUs") **105**, host bridge **110**, input/output ("IO") bridge **115**, graphics processing units (singular "GPU" or plural "GPUs") **125**, and/or application-specific integrated circuits (singular "ASIC or plural "ASICs") (not shown) disposed on one or more printed circuit boards (not shown) that are configured to perform computational operations. Each of the one or more CPUs **105**, GPUs **125**, or ASICs (not shown) may be a single-core (not independently illustrated) device or a multi-core (not independently illustrated) device. Multi-core devices typically include a plurality of cores (not shown) disposed on the same physical die (not shown) or a plurality of cores (not shown) disposed on multiple die (not shown) that are collectively disposed within the same mechanical package (not shown).

CPU **105** may be a general purpose computational device typically configured to execute software instructions. CPU **105** may include an interface **108** to host bridge **110**, an interface **118** to system memory **120**, and an interface **123** to one or more IO devices, such as, for example, one or more GPUs **125**. GPU **125** may serve as a specialized computational device typically configured to perform graphics functions related to frame buffer manipulation. However, one of ordinary skill in the art will recognize that GPU **125** may be used to perform non-graphics related functions that are computationally intensive. In certain embodiments, GPU **125** may interface **123** directly with CPU **125** (and interface **118** with system memory **120** through CPU **105**). In other embodiments, GPU **125** may interface **121** with host bridge **110** (and interface **116** or **118** with system memory **120** through host bridge **110** or CPU **105** depending on the application or design). In still other embodiments, GPU **125** may interface **133** with IO bridge **115** (and interface **116** or

118 with system memory 120 through host bridge 110 or CPU 105 depending on the application or design). The functionality of GPU 125 may be integrated, in whole or in part, with CPU 105.

Host bridge 110 may be an interface device configured to interface between the one or more computational devices and IO bridge 115 and, in some embodiments, system memory 120. Host bridge 110 may include an interface 108 to CPU 105, an interface 113 to IO bridge 115, for embodiments where CPU 105 does not include an interface 118 to system memory 120, an interface 116 to system memory 120, and for embodiments where CPU 105 does not include an integrated GPU 125 or an interface 123 to GPU 125, an interface 121 to GPU 125. The functionality of host bridge 110 may be integrated, in whole or in part, with CPU 105. IO bridge 115 may be an interface device configured to interface between the one or more computational devices and various IO devices (e.g., 140, 145) and IO expansion, or add-on, devices (not independently illustrated). IO bridge 115 may include an interface 113 to host bridge 110, one or more interfaces 133 to one or more IO expansion devices 135, an interface 138 to keyboard 140, an interface 143 to mouse 145, an interface 148 to one or more local storage devices 150, and an interface 153 to one or more network interface devices 155. The functionality of IO bridge 115 may be integrated, in whole or in part, with CPU 105 or host bridge 110. Each local storage device 150, if any, may be a solid-state memory device, a solid-state memory device array, a hard disk drive, a hard disk drive array, or any other non-transitory computer readable medium. Network interface device 155 may provide one or more network interfaces including any network protocol suitable to facilitate networked communications.

Computing system 100 may include one or more network-attached storage devices 160 in addition to, or instead of, one or more local storage devices 150. Each network-attached storage device 160, if any, may be a solid-state memory device, a solid-state memory device array, a hard disk drive, a hard disk drive array, or any other non-transitory computer readable medium. Network-attached storage device 160 may or may not be collocated with computing system 100 and may be accessible to computing system 100 via one or more network interfaces provided by one or more network interface devices 155.

One of ordinary skill in the art will recognize that computing system 100 may be a conventional computing system or an application-specific computing system. In certain embodiments, an application-specific computing system may include one or more ASICs (not shown) that are configured to perform one or more functions, such as hashing, in a more efficient manner. The one or more ASICs (not shown) may interface directly with CPU 105, host bridge 110, or GPU 125 or interface through IO bridge 115. Alternatively, in other embodiments, an application-specific computing system may be reduced to only those components necessary to perform a desired function in an effort to reduce one or more of chip count, printed circuit board footprint, thermal design power, and power consumption. The one or more ASICs (not shown) may be used instead of one or more of CPU 105, host bridge 110, IO bridge 115, or GPU 125. In such systems, the one or more ASICs may incorporate sufficient functionality to perform certain network and computational functions in a minimal footprint with substantially fewer component devices.

As such, one of ordinary skill in the art will recognize that CPU 105, host bridge 110, IO bridge 115, GPU 125, or ASIC (not shown) or a subset, superset, or combination of functions or features thereof, may be integrated, distributed, or excluded, in whole or in part, based on an application, design, or form factor in accordance with one or more embodiments of the present invention. Thus, the description of computing system 100 is merely exemplary and not intended to limit the type, kind, or configuration of component devices that constitute a computing system 100 suitable for performing computing operations in accordance with one or more embodiments of the present invention.

One of ordinary skill in the art will recognize that computing system 100 may be a stand alone, laptop, desktop, server, blade, or rack mountable system and may vary based on an application or design.

FIG. 2 shows a flexible datacenter 200 in accordance with one or more embodiments of the present invention. Flexible datacenter 200 may include a mobile container 205, a behind-the-meter power input system 210, a power distribution system 215, a climate control system (e.g., 250, 260, 270, 280, and/or 290), a datacenter control system 220, and a plurality of computing systems 100 disposed in one or more racks 240. Datacenter control system 220 may be a computing system (e.g., 100 of FIG. 1) configured to dynamically modulate power delivery to one or more computing systems 100 disposed within flexible datacenter 200 based on unutilized behind-the-meter power availability or an operational directive from a local station control system (not shown), a remote master control system (not shown), or a grid operator (not shown).

In certain embodiments, mobile container 205 may be a storage trailer disposed on wheels and configured for rapid deployment. In other embodiments, mobile container 205 may be a storage container (not shown) configured for placement on the ground and potentially stacked in a vertical manner (not shown). In still other embodiments, mobile container 205 may be an inflatable container, a floating container, or any other type or kind of container suitable for housing a mobile datacenter 200.

Flexible datacenter 200 may be rapidly deployed on site near a source of unutilized behind-the-meter power generation. Behind-the-meter power input system 210 may be configured to input power to flexible datacenter 200. Behind-the-meter power input system 210 may include a first input (not independently illustrated) configured to receive three-phase behind-the-meter alternating current ("AC") voltage. In certain embodiments, behind-the-meter power input system 210 may include a supervisory AC-to-AC step-down transformer (not shown) configured to step down three-phase behind-the-meter AC voltage to single-phase supervisory nominal AC voltage or a second input (not independently illustrated) configured to receive single-phase supervisory nominal AC voltage from the local station (not shown) or a metered source (not shown). Behind-the-meter power input system 210 may provide single-phase supervisory nominal AC voltage to datacenter control system 220, which may remain powered at almost all times to control the operation of flexible datacenter 200. The first input (not independently illustrated) or a third input (not independently illustrated) of behind-the-meter power input system 210 may direct three-phase behind-the-meter AC voltage to an operational AC-to-AC step-down transformer (not shown) configured to controllably step down three-phase behind-the-meter AC voltage to three-phase nominal AC voltage. Datacenter control system 220 may controllably enable or disable generation or provision of three-phase nominal AC voltage by the operational AC-to-AC step-down transformer (not shown).

Behind-the-meter power input system **210** may provide three phases of three-phase nominal AC voltage to power distribution system **215**. Power distribution system **215** may controllably provide a single phase of three-phase nominal AC voltage to each computing system **100** or group **240** of computing systems **100** disposed within flexible datacenter **200**. Datacenter control system **220** may controllably select which phase of three-phase nominal AC voltage that power distribution system **215** provides to each computing system **100** or group **240** of computing systems **100**. In this way, datacenter control system **220** may modulate power delivery by either ramping-up flexible datacenter **200** to fully operational status, ramping-down flexible datacenter **200** to offline status (where only datacenter control system **220** remains powered), reducing power consumption by withdrawing power delivery from, or reducing power to, one or more computing systems **100** or groups **240** of computing systems **100**, or modulating a power factor correction factor for the local station by controllably adjusting which phases of three-phase nominal AC voltage are used by one or more computing systems **100** or groups **240** of computing systems **100**.

Flexible datacenter **200** may include a climate control system (e.g., **250**, **260**, **270**, **280**, **290**) configured to maintain the plurality of computing systems **100** within their operational temperature range. In certain embodiments, the climate control system may include an air intake **250**, an evaporative cooling system **270**, a fan **280**, and an air outtake **260**. In other embodiments, the climate control system may include an air intake **250**, an air conditioner or refrigerant cooling system **290**, and an air outtake **260**. In still other embodiments, the climate control system may include a computer room air conditioner system (not shown), a computer room air handler system (not shown), or an immersive cooling system (not shown). One of ordinary skill in the art will recognize that any suitable heat extraction system (not shown) configured to maintain the operation of the plurality of computing systems **100** within their operational temperature range may be used in accordance with one or more embodiments of the present invention.

Flexible datacenter **200** may include a battery system (not shown) configured to convert three-phase nominal AC voltage to nominal DC voltage and store power in a plurality of storage cells. The battery system (not shown) may include a DC-to-AC inverter configured to convert nominal DC voltage to three-phase nominal AC voltage for flexible datacenter **200** use. Alternatively, the battery system (not shown) may include a DC-to-AC inverter configured to convert nominal DC voltage to single-phase nominal AC voltage to power datacenter control system **220**.

One of ordinary skill in the art will recognize that a voltage level of three-phase behind-the-meter AC voltage may vary based on an application or design and the type or kind of local power generation. As such, a type, kind, or configuration of the operational AC-to-AC step down transformer (not shown) may vary based on the application or design. In addition, the frequency and voltage level of three-phase nominal AC voltage, single-phase nominal AC voltage, and nominal DC voltage may vary based on the application or design in accordance with one or more embodiments of the present invention.

FIG. **3** shows a three-phase power distribution of a flexible datacenter **200** in accordance with one or more embodiments of the present invention. Flexible datacenter **200** may include a plurality of racks **240**, each of which may include one or more computing systems **100** disposed therein. As discussed above, the behind-the-meter power input system (**210** of FIG. **2**) may provide three phases of three-phase nominal AC voltage to the power distribution system (**215** of FIG. **2**). The power distribution system (**215** of FIG. **2**) may controllably provide a single phase of three-phase nominal AC voltage to each computing system **100** or group **240** of computing systems **100** disposed within flexible datacenter **200**. For example, a flexible datacenter **200** may include eighteen racks **240**, each of which may include eighteen computing systems **100**. The power distribution system (**215** of FIG. **2**) may control which phase of three-phase nominal AC voltage is provided to one or more computing systems **100**, a rack **240** of computing systems **100**, or a group (e.g., **310**, **320**, or **330**) of racks **240** of computing systems **100**.

In the figure, for purposes of illustration only, eighteen racks **240** are divided into a first group of six racks **310**, a second group of six racks **320**, and a third group of six racks **330**, where each rack contains eighteen computing systems **100**. The power distribution system (**215** of FIG. **2**) may, for example, provide a first phase of three-phase nominal AC voltage to the first group of six racks **310**, a second phase of three-phase nominal AC voltage to the second group of six racks **320**, and a third phase of three-phase nominal AC voltage to the third group of six racks **330**. If the flexible datacenter (**200** of FIG. **2**) receives an operational directive from the local station (not shown) to provide power factor correction, the datacenter control system (**220** of FIG. **2**) may direct the power distribution system (**215** of FIG. **2**) to adjust which phase or phases of three-phase nominal AC voltage are used to provide the power factor correction required by the local station (not shown) or grid operator (not shown). One of ordinary skill in the art will recognize that, in addition to the power distribution, the load may be varied by adjusting the number of computing systems **100** operatively powered. As such, the flexible datacenter (**200** of FIG. **2**) may be configured to act as a capacitive or inductive load to provide the appropriate reactance necessary to achieve the power factor correction required by the local station (not shown).

FIG. **4** shows a control distribution scheme of a flexible datacenter **200** in accordance with one or more embodiments of the present invention. Datacenter control system **220** may independently, or cooperatively with one or more of local station control system **410**, remote master control system **420**, and grid operator **440**, modulate power delivery to flexible datacenter **200**. Specifically, power delivery may be dynamically adjusted based on conditions or operational directives.

Local station control system **410** may be a computing system (e.g., **100** of FIG. **1**) that is configured to control various aspects of the local station (not independently illustrated) that generates power and sometimes generates unutilized behind-the-meter power. Local station control system **410** may communicate with remote master control system **420** over a networked connection **430** and with datacenter control system **220** over a networked or hardwired connection **415**. Remote master control system **420** may be a computing system (e.g., **100** of FIG. **1**) that is located offsite, but connected via a network connection **425** to datacenter control system **220**, that is configured to provide supervisory or override control of flexible datacenter **200** or a fleet (not shown) of flexible datacenters **200**. Grid operator **440** may be a computing system (e.g., **100** of FIG. **1**) that is configured to control various aspects of the grid (not independently illustrated) that receives power from the local station (not independently illustrated). Grid operator **440** may commu-

nicate with local station control system **440** over a networked or hardwired connection **445**.

Datacenter control system **220** may monitor unutilized behind-the-meter power availability at the local station (not independently illustrated) and determine when a datacenter ramp-up condition is met. Unutilized behind-the-meter power availability may include one or more of excess local power generation, excess local power generation that the grid cannot accept, local power generation that is subject to economic curtailment, local power generation that is subject to reliability curtailment, local power generation that is subject to power factor correction, situations where local power generation is prohibitively low, start up situations, transient situations, or testing situations where there is an economic advantage to using locally generated behind-the-meter power generation, specifically power available at little to no cost and with no associated transmission or distribution costs.

The datacenter ramp-up condition may be met if there is sufficient behind-the-meter power availability and there is no operational directive from local station control system **410**, remote master control system **420**, or grid operator **440** to go offline or reduce power. As such, datacenter control system **220** may enable **435** behind-the-meter power input system **210** to provide three-phase nominal AC voltage to the power distribution system (**215** of FIG. **2**) to power the plurality of computing systems (**100** of FIG. **2**) or a subset thereof. Datacenter control system **220** may optionally direct one or more computing systems (**100** of FIG. **2**) to perform predetermined computational operations. For example, if the one or more computing systems (**100** of FIG. **2**) are configured to perform blockchain hashing operations, datacenter control system **220** may direct them to perform blockchain hashing operations for a specific blockchain application, such as, for example, Bitcoin, Litecoin, or Ethereum. Alternatively, one or more computing systems (**100** of FIG. **2**) may be configured to independently receive a computational directive from a network connection (not shown) to a peer-to-peer blockchain network (not shown) such as, for example, a network for a specific blockchain application, to perform predetermined computational operations.

Remote master control system **420** may specify to datacenter control system **220** what sufficient behind-the-meter power availability constitutes, or datacenter control system **220** may be programmed with a predetermined preference or criteria on which to make the determination independently. For example, in certain circumstances, sufficient behind-the-meter power availability may be less than that required to fully power the entire flexible datacenter **200**. In such circumstances, datacenter control system **220** may provide power to only a subset of computing systems (**100** of FIG. **2**), or operate the plurality of computing systems (**100** of FIG. **2**) in a lower power mode, that is within the sufficient, but less than full, range of power that is available.

While flexible datacenter **200** is online and operational, a datacenter ramp-down condition may be met when there is insufficient, or anticipated to be insufficient, behind-the-meter power availability or there is an operational directive from local station control system **410**, remote master control system **420**, or grid operator **440**. Datacenter control system **220** may monitor and determine when there is insufficient, or anticipated to be insufficient, behind-the-meter power availability. As noted above, sufficiency may be specified by remote master control system **420** or datacenter control system **220** may be programmed with a predetermined preference or criteria on which to make the determination independently. An operational directive may be based on current dispatchability, forward looking forecasts for when unutilized behind-the-meter power is, or is expected to be, available, economic considerations, reliability considerations, operational considerations, or the discretion of the local station **410**, remote master control **420**, or grid operator **440**. For example, local station control system **410**, remote master control system **420**, or grid operator **440** may issue an operational directive to flexible datacenter **200** to go offline and power down. When the datacenter ramp-down condition is met, datacenter control system **220** may disable power delivery to the plurality of computing systems (**100** of FIG. **2**). Datacenter control system **220** may disable **435** behind-the-meter power input system **210** from providing three-phase nominal AC voltage to the power distribution system (**215** of FIG. **2**) to power down the plurality of computing systems (**100** of FIG. **2**), while datacenter control system **220** remains powered and is capable of rebooting flexible datacenter **200** when unutilized behind-the-meter power becomes available again.

While flexible datacenter **200** is online and operational, changed conditions or an operational directive may cause datacenter control system **220** to modulate power consumption by flexible datacenter **200**. Datacenter control system **220** may determine, or local station control system **410**, remote master control system **420**, or grid operator **440** may communicate, that a change in local conditions may result in less power generation, availability, or economic feasibility, than would be necessary to fully power flexible datacenter **200**. In such situations, datacenter control system **220** may take steps to reduce or stop power consumption by flexible datacenter **200** (other than that required to maintain operation of datacenter control system **220**). Alternatively, local station control system **410**, remote master control system **420**, or grid operator **440**, may issue an operational directive to reduce power consumption for any reason, the cause of which may be unknown. In response, datacenter control system **220** may dynamically reduce or withdraw power delivery to one or more computing systems (**100** of FIG. **2**) to meet the dictate. Datacenter control system **220** may controllably provide three-phase nominal AC voltage to a smaller subset of computing systems (**100** of FIG. **2**) to reduce power consumption. Datacenter control system **220** may dynamically reduce the power consumption of one or more computing systems (**100** of FIG. **2**) by reducing their operating frequency or forcing them into a lower power mode through a network directive.

One of ordinary skill in the art will recognize that datacenter control system **220** may be configured to have a number of different configurations, such as a number or type or kind of computing systems (**100** of FIG. **2**) that may be powered, and in what operating mode, that correspond to a number of different ranges of sufficient and available unutilized behind-the-meter power availability. As such, datacenter control system **220** may modulate power delivery over a variety of ranges of sufficient and available unutilized behind-the-meter power availability.

FIG. **5** shows a control distribution of a fleet **500** of flexible datacenters **200** in accordance with one or more embodiments of the present invention. The control distribution of a flexible datacenter **200** shown and described with respect to FIG. **4** may be extended to a fleet **500** of flexible datacenters **200**. For example, a first local station (not independently illustrated), such as, for example, a wind farm (not shown), may include a first plurality **510** of flexible datacenters **200***a* through **200***d*, which may be collocated or distributed across the local station (not shown). A second

local station (not independently illustrated), such as, for example, another wind farm or a solar farm (not shown), may include a second plurality **520** of flexible datacenters **200***e* through **200***h*, which may be collocated or distributed across the local station (not shown). One of ordinary skill in the art will recognize that the number of flexible datacenters **200** deployed at a given station and the number of stations within the fleet may vary based on an application or design in accordance with one or more embodiments of the present invention.

Remote master control system **420** may provide supervisory control over fleet **500** of flexible datacenters **200** in a similar manner to that shown and described with respect to FIG. **4**, with the added flexibility to make high level decisions with respect to fleet **500** that may be counterintuitive to a given station. Remote master control system **420** may make decisions regarding the issuance of operational directives to a given local station based on, for example, the status of each local station where flexible datacenters **200** are deployed, the workload distributed across fleet **500**, and the expected computational demand required for the expected workload. In addition, remote master control system **420** may shift workloads from a first plurality **510** of flexible datacenters **200** to a second plurality **520** of flexible datacenters **200** for any reason, including, for example, a loss of unutilized behind-the-meter power availability at one local station and the availability of unutilized behind-the-meter power at another local station.

FIG. **6** shows a flexible datacenter **200** powered by one or more wind turbines **610** in accordance with one or more embodiments of the present invention. A wind farm **600** typically includes a plurality of wind turbines **610**, each of which intermittently generates a wind-generated AC voltage. The wind-generated AC voltage may vary based on a type, kind, or configuration of farm **600**, turbine **610**, and incident wind speed. The wind-generated AC voltage is typically input into a turbine AC-to-AC step-up transformer (not shown) that is disposed within the nacelle (not independently illustrated) or at the base of the mast (not independently illustrated) of turbine **610**. The turbine AC-to-AC step up transformer (not shown) outputs three-phase wind-generated AC voltage **620**. Three-phase wind-generated AC voltage **620** produced by the plurality of wind turbines **610** is collected **625** and provided **630** to another AC-to-AC step-up transformer **640** that steps up three-phase wind-generated AC voltage **620** to three-phase grid AC voltage **650** suitable for delivery to grid **660**. Three-phase grid AC voltage **650** may be stepped down with an AC-to-AC step-down transformer **670** configured to produce three-phase local station AC voltage **680** provided to local station **690**. One of ordinary skill in the art will recognize that the actual voltage levels may vary based on the type, kind, or number of wind turbines **610**, the configuration or design of wind farm **600**, and grid **660** that it feeds into.

The output side of AC-to-AC step-up transformer **640** that connects to grid **660** may be metered and is typically subject to transmission and distribution costs. In contrast, power consumed on the input side of AC-to-AC step-up transformer **640** may be considered behind-the-meter and is typically not subject to transmission and distribution costs. As such, one or more flexible datacenters **200** may be powered by three-phase wind-generated AC voltage **620**. Specifically, in wind farm **600** applications, the three-phase behind-the-meter AC voltage used to power flexible datacenter **200** may be three-phase wind-generated AC voltage **620**. As such, flexible datacenter **200** may reside behind-the-meter, avoid transmission and distribution costs, and may be dynamically powered when unutilized behind-the-meter power is available.

Unutilized behind-the-meter power availability may occur when there is excess local power generation. In high wind conditions, wind farm **600** may generate more power than, for example, AC-to-AC step-up transformer **640** is rated for. In such situations, wind farm **600** may have to take steps to protect its equipment from damage, which may include taking one or more turbines **610** offline or shunting their voltage to dummy loads or ground. Advantageously, one or more flexible datacenters **200** may be used to consume power on the input side of AC-to-AC step-up transformer **640**, thereby allowing wind farm **600** to operate equipment within operating ranges while flexible datacenter **200** receives behind-the-meter power without transmission or distribution costs. The local station control system (not independently illustrated) of local station **690** may issue an operational directive to the one or more flexible datacenters **200** or to the remote master control system (**420** of FIG. **4**) to ramp-up to the desired power consumption level. When the operational directive requires the cooperative action of multiple flexible datacenters **200**, the remote mater control system (**420** of FIG. **4**) may determine how to power each individual flexible datacenter **200** in accordance with the operational directive or provide an override to each flexible datacenter **200**.

Another example of unutilized behind-the-meter power availability is when grid **660** cannot, for whatever reason, take the power being produced by wind farm **600**. In such situations, wind farm **600** may have to take one or more turbines **610** offline or shunt their voltage to dummy loads or ground. Advantageously, one or more flexible datacenters **200** may be used to consume power on the input side of AC-to-AC step-up transformer **640**, thereby allowing wind farm **600** to either produce power to grid **660** at a lower level or shut down transformer **640** entirely while flexible datacenter **200** receives behind-the-meter power without transmission or distribution costs. The local station control system (not independently illustrated) of local station **690** or the grid operator (not independently illustrated) of grid **660** may issue an operational directive to the one or more flexible datacenters **200** or to the remote master control system (**420** of FIG. **4**) to ramp-up to the desired power consumption level. When the operational directive requires the cooperative action of multiple flexible datacenters **200**, the remote master control system (**420** of FIG. **4**) may determine how to power each individual flexible datacenter **200** in accordance with the operational directive or provide an override to each flexible datacenter **200**.

Another example of unutilized behind-the-meter power availability is when wind farm **600** is selling power to grid **660** at a negative price that is offset by a production tax credit. In certain circumstances, the value of the production tax credit may exceed the price wind farm **600** would have to pay to grid **660** to offload their generated power. Advantageously, one or more flexible datacenters **200** may be used to consume power behind-the-meter, thereby allowing wind farm **600** to produce and obtain the production tax credit, but sell less power to grid **660** at the negative price. The local station control system (not independently illustrated) of local station **690** may issue an operational directive to the one or more flexible datacenters **200** or to the remote master control system (**420** of FIG. **4**) to ramp-up to the desired power consumption level. When the operational directive requires the cooperative action of multiple flexible datacenter **200**, the remote master control system (**420** of FIG. **4**)

may determine how to power each individual flexible datacenter **200** in accordance with the operational directive or provide an override to each flexible datacenter **200**.

Another example of unutilized behind-the-meter power availability is when wind farm **600** is selling power to grid **660** at a negative price because grid **660** is oversupplied or is instructed to stand down and stop producing altogether. The grid operator (not independently illustrated) may select certain power generation stations to go offline and stop producing power to grid **660**. Advantageously, one or more flexible datacenters **200** may be used to consume power behind-the-meter, thereby allowing wind farm **600** to stop producing power to grid **660**, but making productive use of the power generated behind-the-meter without transmission or distribution costs. The local station control system (not independently illustrated) of the local station **690** or the grid operator (not independently illustrated) of grid **660** may issue an operational directive to the one or more flexible datacenters **200** or to the remote master control system (**420** of FIG. **4**) to ramp-up to the desired power consumption level. When the operational directive requires the cooperative action of multiple flexible datacenters **200**, the remote master control system (**420** of FIG. **4**) may determine how to power each individual flexible datacenter **200** in accordance with the operational directive or provide an override to each flexible datacenter **200**.

Another example of unutilized behind-the-meter power availability is when wind farm **600** is producing power to grid **660** that is unstable, out of phase, or at the wrong frequency, or grid **660** is already unstable, out of phase, or at the wrong frequency for whatever reason. The grid operator (not independently illustrated) may select certain power generation stations to go offline and stop producing power to grid **660**. Advantageously, one or more flexible datacenters **200** may be used to consume power behind-the-meter, thereby allowing wind farm **600** to stop producing power to grid **660**, but make productive use of the power generated behind-the-meter without transmission or distribution costs. The local station control system (not independently illustrated) of local station **690** may issue an operational directive to the one or more flexible datacenters **200** or to the remote master control system (**420** of FIG. **4**) to ramp-up to the desired power consumption level. When the operational directive requires the cooperative action of multiple flexible datacenters **200**, the remote master control system (**420** of FIG. **4**) may determine how to power each individual flexible datacenter **200** in accordance with the operational directive or provide an override to each flexible datacenter **200**.

Further examples of unutilized behind-the-meter power availability is when wind farm **600** experiences low wind conditions that make it not economically feasible to power up certain components, such as, for example, the local station (not independently illustrated), but there may be sufficient behind-the-meter power availability to power one or more flexible datacenters **200**. Similarly, unutilized behind-the-meter power availability may occur when wind farm **600** is starting up, or testing, one or more turbines **610**. Turbines **610** are frequently offline for installation, maintenance, and service and must be tested prior to coming online as part of the array. One or more flexible datacenters **200** may be powered by one or more turbines **610** that are offline from farm **600**. The above-noted examples of when unutilized behind-the-meter power is available are merely exemplary and are not intended to limit the scope of what one of ordinary skill in the art would recognize as unutilized behind-the-meter power availability. Unutilized behind-the-meter power availability may occur anytime there is power available and accessible behind-the-meter that is not subject to transmission and distribution costs and there is an economic advantage to using it.

One of ordinary skill in the art will recognize that wind farm **600** and wind turbine **610** may vary based on an application or design in accordance with one or more embodiments of the present invention.

FIG. **7** shows a flexible datacenter **200** powered by one or more solar panels **710** in accordance with one or more embodiments of the present invention. A solar farm **700** typically includes a plurality of solar panels **710**, each of which intermittently generates a solar-generated DC voltage **720**. Solar-generated DC voltage **720** may vary based on a type, kind, or configuration of farm **700**, panel **710**, and incident sunlight. Solar-generated DC voltage **720** produced by the plurality of solar panels **710** is collected **725** and provided **730** to a DC-to-AC inverter that converts solar-generated DC voltage into three-phase solar-generated AC voltage **750**. Three-phase solar-generated AC voltage **750** is provided to an AC-to-AC step-up transformer **760** that steps up three-phase solar-generated AC voltage to three-phase grid AC voltage **790**. Three-phase grid AC voltage **790** may be stepped down with an AC-to-AC step-down transformer **785** configured to produce three-phase local station AC voltage **777** provided to local station **775**. One of ordinary skill in the art will recognize that the actual voltage levels may vary based on the type, kind, or number of solar panels **710**, the configuration or design of solar farm **700**, and grid **790** that it feeds into.

The output side of AC-to-AC step-up transformer **760** that connects to grid **790** may be metered and is typically subject to transmission and distribution costs. In contrast, power consumed on the input side of AC-to-AC step-up transformer **760** may be considered behind-the-meter and is typically not subject to transmission and distribution costs. As such, one or more flexible datacenters **200** may be powered by three-phase solar-generated AC voltage **750**. Specifically, in solar farm **700** applications, the three-phase behind-the-meter AC voltage used to power flexible datacenter **200** may be three-phase solar-generated AC voltage **750**. As such, flexible datacenter **200** may reside behind-the-meter, avoid transmission and distribution costs, and may be dynamically powered when unutilized behind-the-meter power is available.

Unutilized behind-the-meter power availability may occur when there is excess local power generation. In high incident sunlight situations, solar farm **700** may generate more power than, for example, AC-to-AC step-up transformer **760** is rated for. In such situations, solar farm **700** may have to take steps to protect its equipment from damage, which may include taking one or more panels **710** offline or shunting their voltage to dummy loads or ground. Advantageously, one or more flexible datacenters **200** may be used to consume power on the input side of AC-to-AC step-up transformer **760**, thereby allowing solar farm **700** to operate equipment within operating ranges while flexible datacenter **200** receives behind-the-meter power without transmission or distribution costs. The local station control system (not independently illustrated) of local station **775** may issue an operational directive to the one or more flexible datacenters **200** or to the remote master control system (**420** of FIG. **4**) to ramp-up to the desired power consumption level. When the operational directive requires the cooperative action of multiple flexible datacenters **200**, the remote mater control system (**420** of FIG. **4**) may determine how to

power each individual flexible datacenter **200** in accordance with the operational directive or provide an override to each flexible datacenter **200**.

Another example of unutilized behind-the-meter power availability is when grid **790** cannot, for whatever reason, take the power being produced by solar farm **700**. In such situations, solar farm **700** may have to take one or more panels **710** offline or shunt their voltage to dummy loads or ground. Advantageously, one or more flexible datacenters **200** may be used to consume power on the input side of AC-to-AC step-up transformer **760**, thereby allowing solar farm **700** to either produce power to grid **790** at a lower level or shut down transformer **760** entirely while flexible datacenter **200** receives behind-the-meter power without transmission or distribution costs. The local station control system (not independently illustrated) of local station **775** or the grid operator (not independently illustrated) of grid **790** may issue an operational directive to the one or more flexible datacenters **200** or to the remote master control system (**420** of FIG. **4**) to ramp-up to the desired power consumption level. When the operational directive requires the cooperative action of multiple flexible datacenters **200**, the remote master control system (**420** of FIG. **4**) may determine how to power each individual flexible datacenter **200** in accordance with the operational directive or provide an override to each flexible datacenter **200**.

Another example of unutilized behind-the-meter power availability is when solar farm **700** is selling power to grid **790** at a negative price that is offset by a production tax credit. In certain circumstances, the value of the production tax credit may exceed the price solar farm **700** would have to pay to grid **790** to offload their generated power. Advantageously, one or more flexible datacenters **200** may be used to consume power behind-the-meter, thereby allowing solar farm **700** to produce and obtain the production tax credit, but sell less power to grid **790** at the negative price. The local station control system (not independently illustrated) of local station **775** may issue an operational directive to the one or more flexible datacenters **200** or to the remote master control system (**420** of FIG. **4**) to ramp-up to the desired power consumption level. When the operational directive requires the cooperative action of multiple flexible datacenter **200**, the remote master control system (**420** of FIG. **4**) may determine how to power each individual flexible datacenter **200** in accordance with the operational directive or provide an override to each flexible datacenter **200**.

Another example of unutilized behind-the-meter power availability is when solar farm **700** is selling power to grid **790** at a negative price because grid **790** is oversupplied or is instructed to stand down and stop producing altogether. The grid operator (not independently illustrated) may select certain power generation stations to go offline and stop producing power to grid **790**. Advantageously, one or more flexible datacenters **200** may be used to consume power behind-the-meter, thereby allowing solar farm **700** to stop producing power to grid **790**, but making productive use of the power generated behind-the-meter without transmission or distribution costs. The local station control system (not independently illustrated) of the local station **775** or the grid operator (not independently illustrated) of grid **790** may issue an operational directive to the one or more flexible datacenters **200** or to the remote master control system (**420** of FIG. **4**) to ramp-up to the desired power consumption level. When the operational directive requires the cooperative action of multiple flexible datacenters **200**, the remote master control system (**420** of FIG. **4**) may determine how to power each individual flexible datacenter **200** in accordance with the operational directive or provide an override to each flexible datacenter **200**.

Another example of unutilized behind-the-meter power availability is when solar farm **700** is producing power to grid **790** that is unstable, out of phase, or at the wrong frequency, or grid **790** is already unstable, out of phase, or at the wrong frequency for whatever reason. The grid operator (not independently illustrated) may select certain power generation stations to go offline and stop producing power to grid **790**. Advantageously, one or more flexible datacenters **200** may be used to consume power behind-the-meter, thereby allowing solar farm **700** to stop producing power to grid **790**, but make productive use of the power generated behind-the-meter without transmission or distribution costs. The local station control system (not independently illustrated) of local station **775** may issue an operational directive to the one or more flexible datacenters **200** or to the remote master control system (**420** of FIG. **4**) to ramp-up to the desired power consumption level. When the operational directive requires the cooperative action of multiple flexible datacenters **200**, the remote master control system (**420** of FIG. **4**) may determine how to power each individual flexible datacenter **200** in accordance with the operational directive or provide an override to each flexible datacenter **200**.

Further examples of unutilized behind-the-meter power availability is when solar farm **700** experiences intermittent cloud cover such that it is not economically feasible to power up certain components, such as, for example local station **775**, but there may be sufficient behind-the-meter power availability to power one or more flexible datacenters **200**. Similarly, unutilized behind-the-meter power availability may occur when solar farm **700** is starting up, or testing, one or more panels **710**. Panels **710** are frequently offline for installation, maintenance, and service and must be tested prior to coming online as part of the array. One or more flexible datacenters **200** may be powered by one or more panels **710** that are offline from farm **700**. The above-noted examples of when unutilized behind-the-meter power is available are merely exemplary and are not intended to limit the scope of what one of ordinary skill in the art would recognize as unutilized behind-the-meter power availability. Behind-the-meter power availability may occur anytime there is power available and accessible behind-the-meter that is not subject to transmission and distribution costs and there is an economic advantage to using it.

One of ordinary skill in the art will recognize that solar farm **700** and solar panel **710** may vary based on an application or design in accordance with one or more embodiments of the present invention.

FIG. **8** shows a flexible datacenter **200** powered by flare gas **800** in accordance with one or more embodiments of the present invention. Flare gas **800** is combustible gas produced as a product or by-product of petroleum refineries, chemical plants, natural gas processing plants, oil and gas drilling rigs, and oil and gas production facilities. Flare gas **800** is typically burned off through a flare stack (not shown) or vented into the air. In one or more embodiments of the present invention, flare gas **800** may be diverted **812** to a gas-powered generator that produces three-phase gas-generated AC voltage **822**. This power may be considered behind-the-meter and is not subject to transmission and distribution costs. As such, one or more flexible datacenters **200** may be powered by three-phase gas-generated AC voltage. Specifically, the three-phase behind-the-meter AC voltage used to power flexible datacenter **200** may be three-phase gas-generated AC voltage **822**. Accordingly,

flexible datacenter **200** may reside behind-the-meter, avoid transmission and distribution costs, and may be dynamically powered when unutilized behind-the-meter power is available.

FIG. **9** shows a method of dynamic power delivery to a flexible datacenter (**200** of FIG. **2**) using unutilized behind-the-meter power **900** in accordance with one or more embodiments of the present invention. In step **910**, the datacenter control system (**220** of FIG. **4**), or the remote master control system (**420** of FIG. **4**), may monitor unutilized behind-the-meter power availability. In certain embodiments, monitoring may include receiving information or an operational directive from the local station control system (**410** of FIG. **4**) or the grid operator (**440** of FIG. **4**) corresponding to unutilized behind-the-meter power availability.

In step **920**, the datacenter control system (**220** of FIG. **4**), or the remote master control system (**420** of FIG. **4**), may determine when a datacenter ramp-up condition is met. In certain embodiments, the datacenter ramp-up condition may be met when there is sufficient behind-the-meter power availability and there is no operational directive from the local station to go offline or reduce power. In step **930**, the datacenter control system (**220** of FIG. **4**) may enable behind-the-meter power delivery to one or more computing systems (**100** of FIG. **2**). In step **940**, once ramped-up, the datacenter control system (**220** of FIG. **4**) or the remote master control system (**420** of FIG. **4**) may direct one or more computing systems (**100** of FIG. **2**) to perform predetermined computational operations. In certain embodiments, the predetermined computational operations may include the execution of one or more hashing functions.

While operational, the datacenter control system (**220** of FIG. **4**), or the remote master control system (**420** of FIG. **4**), may receive an operational directive to modulate power consumption. In certain embodiments, the operational directive may be a directive to reduce power consumption. In such embodiments, the datacenter control system (**220** of FIG. **4**) or the remote master control system (**420** of FIG. **4**) may dynamically reduce power delivery to one or more computing systems (**100** of FIG. **2**) or dynamically reduce power consumption of one or more computing systems. In other embodiments, the operational directive may be a directive to provide a power factor correction factor. In such embodiments, the datacenter control system (**220** of FIG. **4**) or the remote master control system (**420** of FIG. **4**) may dynamically adjust power delivery to one or more computing systems (**100** of FIG. **2**) to achieve a desired power factor correction factor. In still other embodiments, the operational directive may be a directive to go offline or power down. In such embodiments, the datacenter control system (**220** of FIG. **4**) may disable power delivery to one or more computing systems (**100** of FIG. **2**).

The datacenter control system (**220** of FIG. **4**), or the remote master control system (**420** of FIG. **4**), may determine when a datacenter ramp-down condition is met. In certain embodiments, the datacenter ramp-down condition may be met if there is insufficient or anticipated to be insufficient behind-the-meter power availability or there is an operational directive from the local station to go offline or reduce power. The datacenter control system (**220** of FIG. **4**) may disable behind-the-meter power delivery to one or more computing systems (**100** of FIG. **2**). Once ramped-down, the datacenter control system (**220** of FIG. **4**) remains powered and in communication with the remote master control system (**420** of FIG. **4**) so that it may dynamically power the flexible datacenter (**200** of FIG. **2**) when conditions change.

One of ordinary skill in the art will recognize that a datacenter control system (**220** of FIG. **4**) may dynamically modulate power delivery to one or more computing systems (**100** of FIG. **2**) of a flexible datacenter (**200** of FIG. **2**) based on unutilized behind-the-meter power availability or an operational directive. The flexible datacenter (**200** of FIG. **2**) may transition between a fully powered down state (while the datacenter control system remains powered), a fully powered up state, and various intermediate states in between. In addition, flexible datacenter (**200** of FIG. **2**) may have a blackout state, where all power consumption, including that of the datacenter control system (**220** of FIG. **4**) is halted. However, once the flexible datacenter (**200** of FIG. **2**) enters the blackout state, it will have to be manually rebooted to restore power to datacenter control system (**220** of FIG. **4**). Local station conditions or operational directives may cause flexible datacenter (**200** of FIG. **2**) to ramp-up, reduce power consumption, change power factor, or ramp-down.

Advantages of one or more embodiments of the present invention may include one or more of the following:

In one or more embodiments of the present invention, a method and system for dynamic power delivery to a flexible datacenter using unutilized energy sources provides a green solution to two prominent problems: the exponential increase in power required for growing blockchain operations and the unutilized and typically wasted energy generated from renewable energy sources.

In one or more embodiments of the present invention, a method and system for dynamic power delivery to a flexible datacenter using unutilized energy sources allows for the rapid deployment of mobile datacenters to local stations. The mobile datacenters may be deployed on site, near the source of power generation, and receive unutilized behind-the-meter power when it is available.

In one or more embodiments of the present invention, a method and system for dynamic power delivery to a flexible datacenter using unutilized energy sources allows for the power delivery to the datacenter to be modulated based on conditions or an operational directive received from the local station or the grid operator.

In one or more embodiments of the present invention, a method and system for dynamic power delivery to a flexible datacenter using unutilized energy sources may dynamically adjust power consumption by ramping-up, ramping-down, or adjusting the power consumption of one or more computing systems within the flexible datacenter.

In one or more embodiments of the present invention, a method and system for dynamic power delivery to a flexible datacenter using unutilized energy sources may be powered by unutilized behind-the-meter power that is free from transmission and distribution costs. As such, the flexible datacenter may perform computational operations, such as hashing function operations, with little to no energy cost.

In one or more embodiments of the present invention, a method and system for dynamic power delivery to a flexible datacenter using unutilized energy sources provides a number of benefits to the hosting local station. The local station may use the flexible datacenter to adjust a load, provide a power factor correction, to offload power, or operate in a manner that invokes a production tax credit.

While the present invention has been described with respect to the above-noted embodiments, those skilled in the art, having the benefit of this disclosure, will recognize that

other embodiments may be devised that are within the scope of the invention as disclosed herein. Accordingly, the scope of the invention should be limited only by the appended claims.

What is claimed is:

1. A flexible datacenter comprising:

a behind-the-meter (BTM) power input system, wherein the BTM power input system is configured to receive power from a power generation station prior to the power undergoing step-up transformation for transmission to a power grid;

a power distribution system;

a plurality of computing systems; and

a datacenter control system configured to modulate power delivery to the plurality of computing systems based on an operational directive.

2. The flexible datacenter of claim **1**, wherein the datacenter control system is configured to receive the operational directive from a remote master control system.

3. The flexible datacenter of claim **2**, wherein the operational directive depends on BTM power availability at the flexible datacenter.

4. The flexible datacenter of claim **3**, wherein the remote master control system is positioned remotely from the flexible datacenter.

5. The flexible datacenter of claim **3**, wherein BTM power availability comprises:

one or more of excess local power generation at a local station level, local power generation subject to economic curtailment, local power generation subject to reliability, curtailment, local power generation subject to power factor correction, low local power generation, start up local power generation situations, transient local power generation situations, or testing local power generation situations where there is an economic advantage to using local BTM power generation to power the flexible datacenter.

6. The flexible datacenter of claim **3**, wherein BTM power availability comprises:

excess local power generation at a local station level.

7. The flexible datacenter of claim **3**, wherein BTM power availability comprises:

local power generation subject to economic curtailment.

8. The flexible datacenter of claim **3**, wherein BTM power availability comprises:

local power generation subject to reliability curtailment.

9. The flexible datacenter of claim **3**, wherein BTM power availability comprises:

local power generation c to power factor correction.

10. The flexible datacenter of claim **3**, wherein BTM power availability comprises:

low local power generation.

11. The flexible datacenter of claim **3**, wherein BTM power availability comprises:

start up local power generation situations.

12. The flexible datacenter of claim **3**, wherein BTM power availability comprises:

transient local power generation situations.

13. The flexible datacenter of claim **3**, wherein BTM power availability comprises:

testing local power generation situations where there is an economic advantage to using local BTM power generation to power the flexible datacenter.

14. The flexible datacenter of claim **1**, wherein the datacenter control system is further configured to modulate power delivery to the plurality computing systems based on BTM power availability at the BTM power input system.

15. The flexible datacenter of claim **1**, wherein the BTM power input system comprises:

an input configured to receive three-phase BTM AC voltage from the power generation station.

16. The flexible datacenter of claim **15**, wherein the BTM power input system is configured to provide a single-phase AC voltage to the datacenter control system.

17. The flexible datacenter of claim **1**, wherein the datacenter control system controllably enables or disables power delivery to respective computing systems of the plurality of computing systems.

18. The flexible datacenter of claim **1**, herein the datacenter control system is positioned remotely from the plurality of computing systems.

19. The flexible datacenter of claim **1**, wherein the operational directive is a workload directive based on a current BTM power availability and a projected BTM power availability at the flexible datacenter.

20. The flexible datacenter of claim **1**, wherein the datacenter control system is collocated with the plurality of computing systems.

21. The flexible datacenter of claim **1**, wherein the datacenter control system is further configured to transfer a workload from the plurality of computing systems to a second plurality of computing systems, and wherein the second plurality of computing systems is positioned at a second flexible datacenter.

22. The flexible datacenter of claim **21**, wherein the flexible datacenter is coupled to a first power generation station such that the plurality of computing systems operates using BTM power from the first power generation station; and

wherein the second flexible datacenter is coupled to a second power generation station such that the second plurality of computing systems operates using BTM power from the second power generation station.

23. The flexible datacenter of claim **22**, wherein the datacenter control system is configured to transfer the workload from the plurality of computing systems to the second plurality of computing systems in response to detecting a change in BTM power availability at the plurality of computing systems.

24. The flexible datacenter of claim **23**, wherein the datacenter control system is a remote master control system that is positioned remotely from the flexible datacenter and the second flexible datacenter.

25. A system comprising:

a first flexible datacenter that comprises:

a behind-the-meter (BTM) power input system, wherein the BTM power input system is configured to receive power from a power generation station prior to the power undergoing step-up transformation for transmission to a power grid;

a power distribution system; and

a plurality of computing systems configured to receive power from the BTM power input system via the power distribution system;

a second flexible datacenter; and

a routing control system configured to modulate power delivery to the first flexible datacenter and the second flexible datacenter.

26. The system of claim **25**, wherein the routing control system is configured to transfer a workload from the plurality of computing systems to a second plurality of computing systems at the second flexible datacenter in response to detecting a change in BTM power availability at the first flexible datacenter.

27. The system of claim **25**, wherein the routing control system is positioned remotely from the first flexible datacenter and the second flexible datacenter, and wherein the routing control system is configured to modulate power delivery to the first flexible datacenter and the second flexible datacenter based on BTM power availability at the first flexible datacenter and the second flexible datacenter.

28. A method of dynamic power delivery to a flexible datacenter using behind-the-meter (BTM) power comprising:

monitoring, by a control system, BTM power availability at the flexible datacenter, wherein the flexible datacenter includes a BTM power input system configured to receive power from a power generation station prior to the power undergoing step-up transformation for transmission to a power grid;

determining that a ramp-up condition is met, wherein the ramp-up condition depends on BTM power availability at the flexible datacenter; and

based on determining that the ramp-up condition is met, providing an operational directive to a datacenter control system at the flexible datacenter, wherein the operational directive instructs the datacenter control system to enable BTM power delivery to one or more computing systems at the flexible datacenter.

29. The method of claim **28**, further comprising:

determining that a ramp-down condition is met, wherein the ramp-down condition depends on BTM power availability at the flexible datacenter; and

based on determining that the ramp-down condition is met, providing a second operational directive to the datacenter control system at the flexible datacenter, wherein the second operational directive instructs the datacenter control system to disable BTM power delivery to one or more computing systems at the flexible datacenter.

30. The method of claim **28**, wherein the control system is positioned remotely from the flexible datacenter.

* * * * *