US 20030005336A1

(19) United States

(12) Patent Application Publication (10) Pub. No.: US 2003/0005336 A1

Poo et al. (43) Pub. Date: Jan. 2, 2003

(54) PORTABLE DEVICE HAVING BIOMETRICS-BASED AUTHENTICATION CAPABILITIES

(76) Inventors: **Teng Pin Poo**, Singapore (SG); **Lay Chuan Lim**, Singapore (SG)

Correspondence Address:
White and Case LLP
Attn: Patent Department
1155 Avenue of the Americas
New York, NY 10036 (US)

(21) Appl. No.: **09/898,310**

(22) Filed: **Jul. 3, 2001**

(30) **Foreign Application Priority Data**

Jun. 28, 2001 () PCT/SG01/00135

Publication Classification

(51) **Int. Cl.**[7] **H04L 9/32**

(52) **U.S. Cl.** **713/202**

(57) **ABSTRACT**

Apparatus and method for implementing biometrics-based access control to a restricted resource. In a preferred embodiment, the present invention is realized using a portable device. Specifically, in one embodiment, the portable device includes a microprocessor, a non-volatile memory coupled thereto, and a biometrics-based authentication module controlled by the microprocessor. Preferably, the biometrics technology used is fingerprint authentication technology. The authentication module is capable of registering a fingerprint upon first use of the portable device, storing an encoded version of the fingerprint in the non-volatile memory. Subsequently, the authentication module can read a person's fingerprint and reliably determine whether the fingerprint matches the registered fingerprint stored in the non-volatile memory. If a match is found, access to the restricted resource is granted to that person; otherwise, access is denied. Embodiments of the present invention thus provide a highly convenient, secured and reliable method and system for user authentication and access control which was not achievable in prior art password-based authentication approaches.

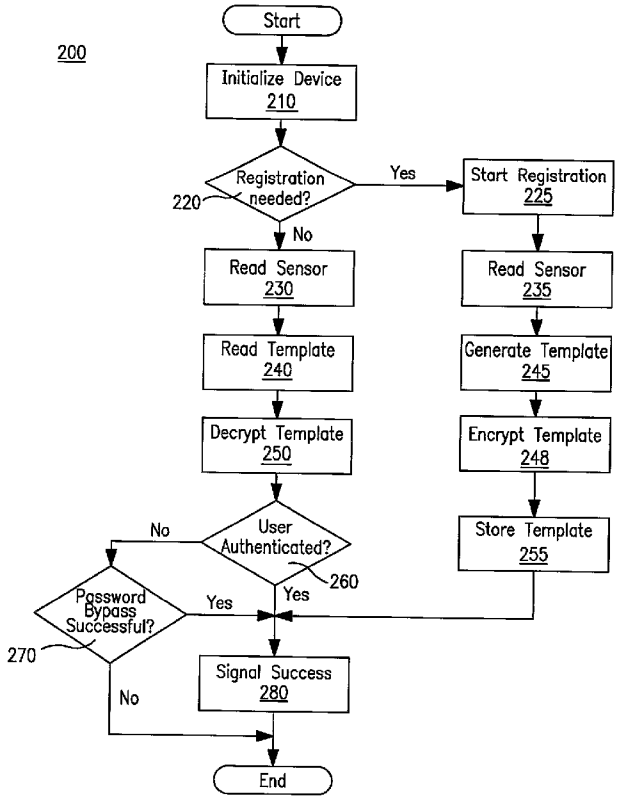

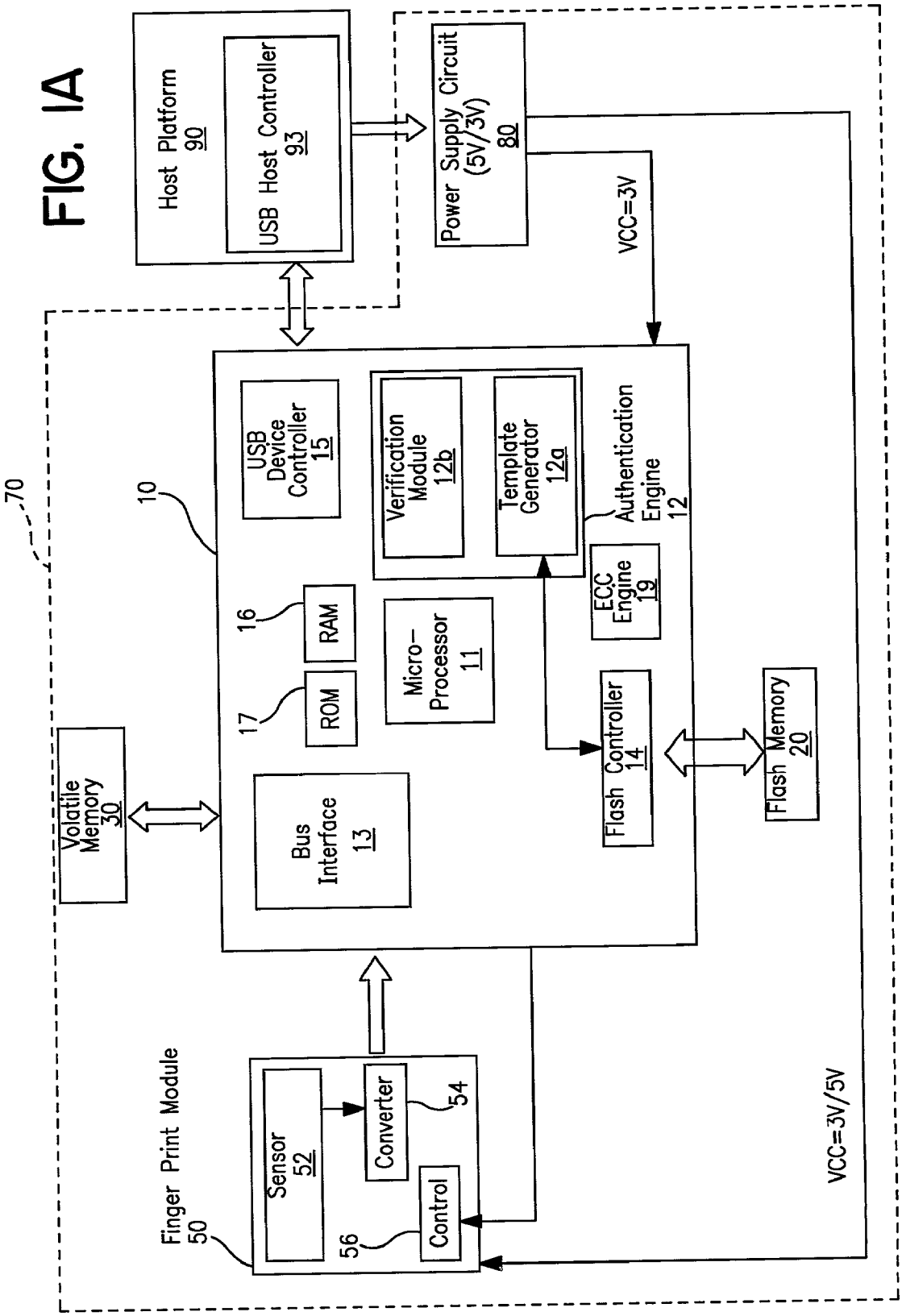
Host Platform
90
USB Host Controller
93
Power Supply Circuit
(5V/3V)
80
VCC=3V
70
10
USB Device Controller
15
Verification Module
12b
Template Generator
12a
Authentication Engine
12
ECC Engine
19
16
RAM
17
ROM
Micro-Processor
11
Volatile Memory
30
Bus Interface
13
Flash Controller
14
Flash Memory
20
Finger Print Module
50
Sensor
52
Converter
54
Control
56
VCC=3V/5V

FIG. 1A

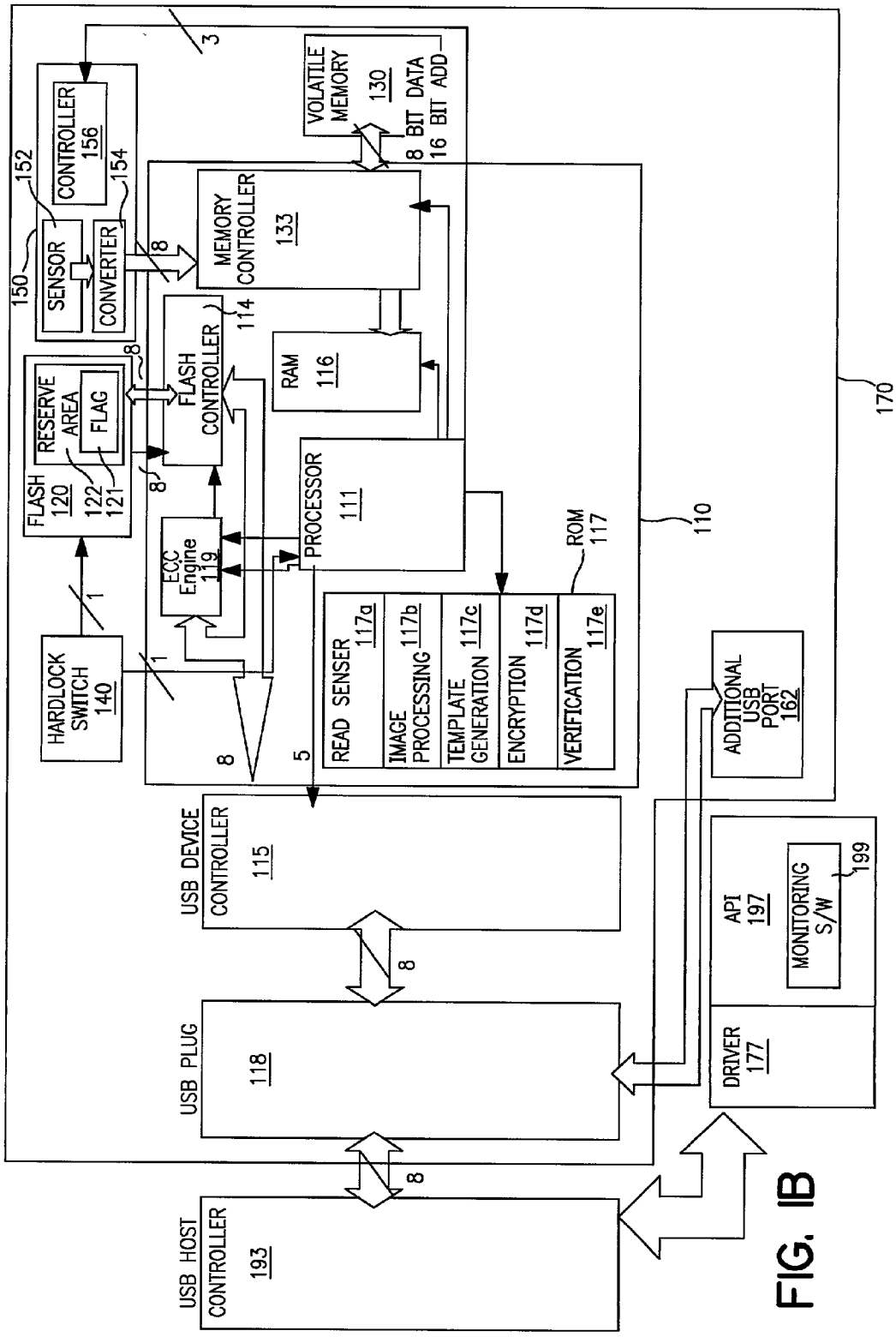
170
110
3
VOLATILE MEMORY 130
8 BIT DATA
16 BIT ADD
CONTROLLER 156
152
154
150
SENSOR
CONVERTER
8
MEMORY CONTROLLER 133
114
FLASH CONTROLLER
RAM 116
FLASH 120
RESERVE AREA
FLAG
122
121
8
PROCESSOR 111
ECC Engine 119
1
HARDLOCK SWITCH 140
ROM 117
READ SENSER 117a
IMAGE PROCESSING 117b
TEMPLATE GENERATION 117c
ENCRYPTION 117d
VERIFICATION 117e
5
ADDITIONAL USB PORT 162
USB DEVICE CONTROLLER 115
USB PLUG 118
API 197
MONITORING S/W
199
DRIVER 177
USB HOST CONTROLLER 193

FIG. 1B

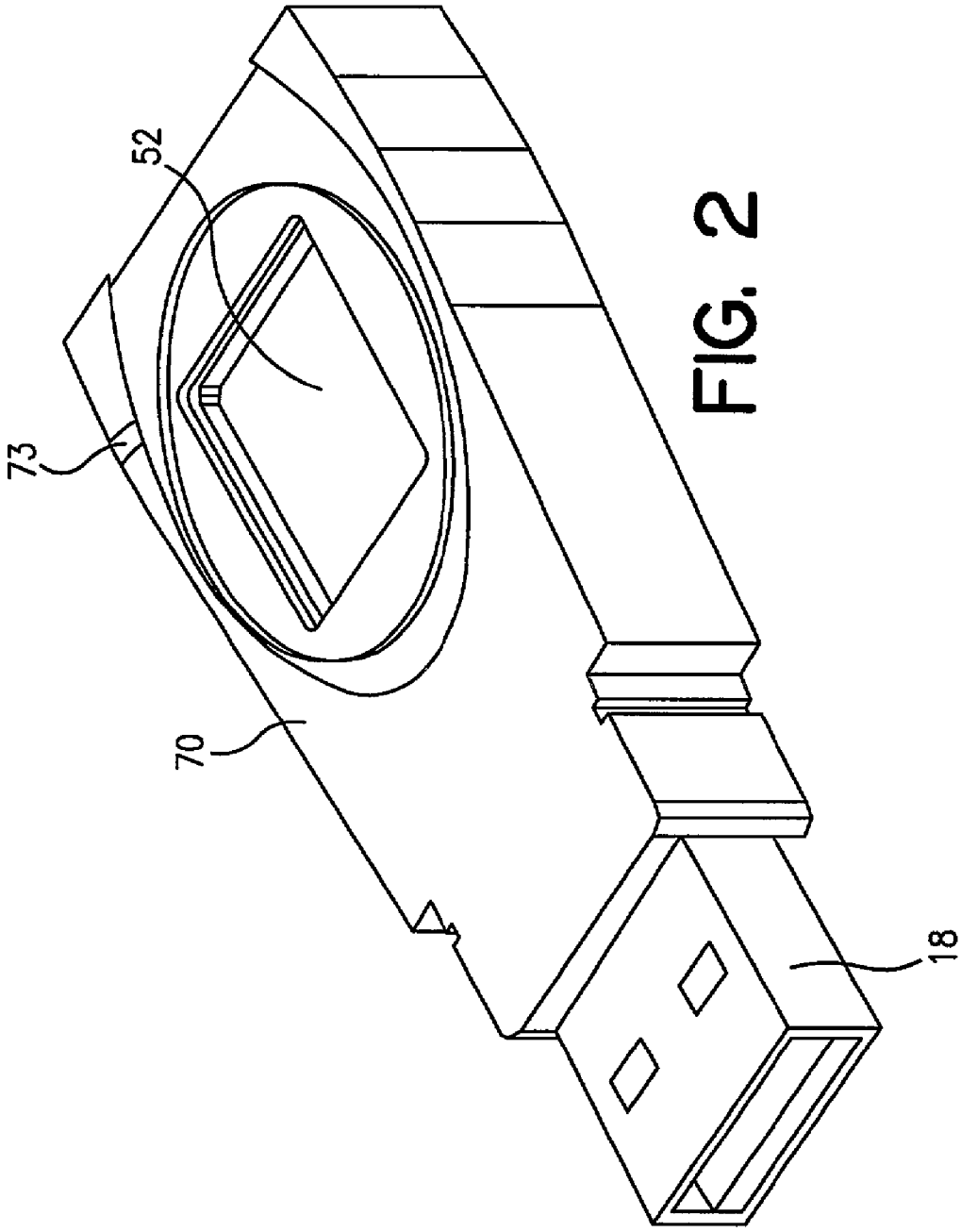

FIG. 2

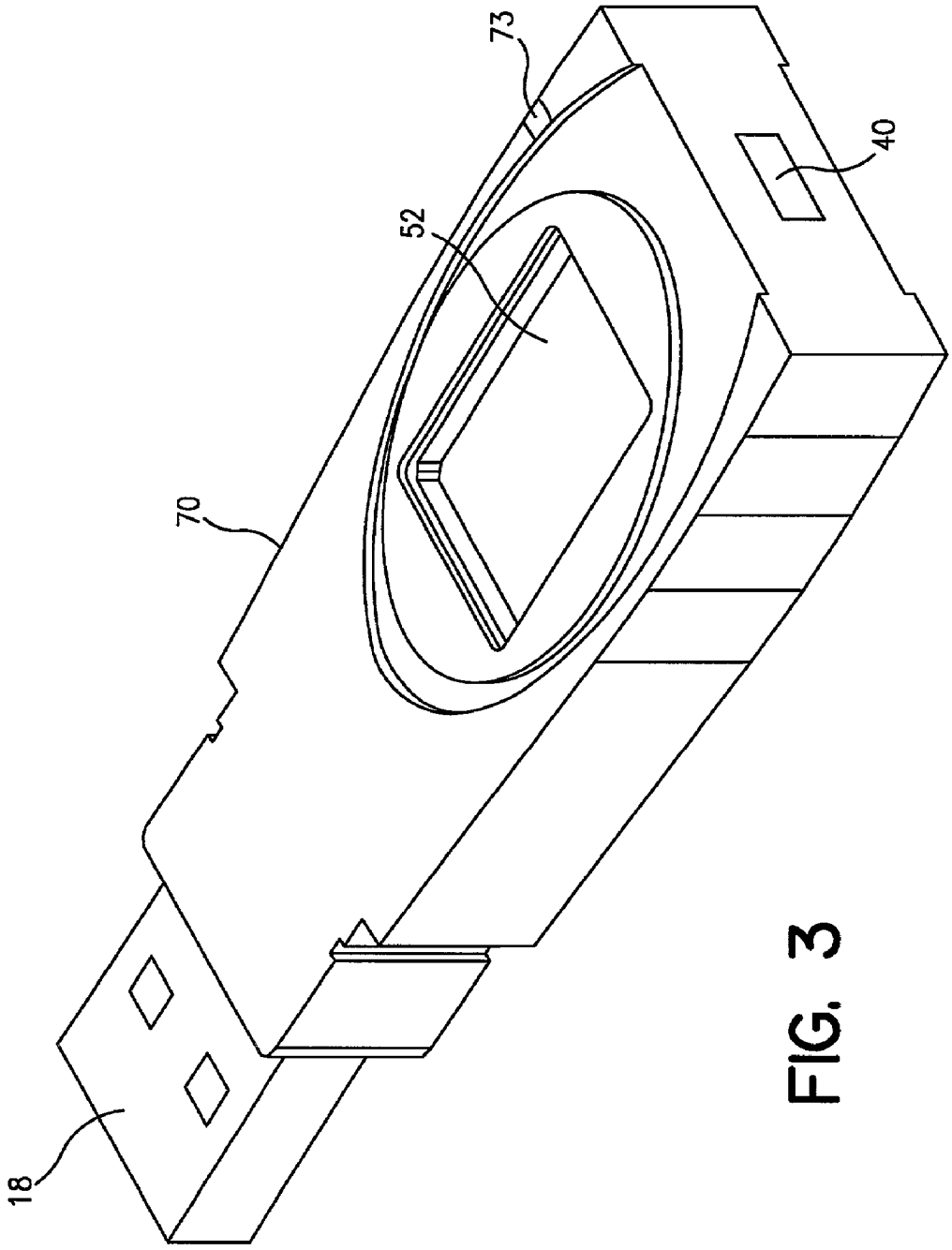

FIG. 3

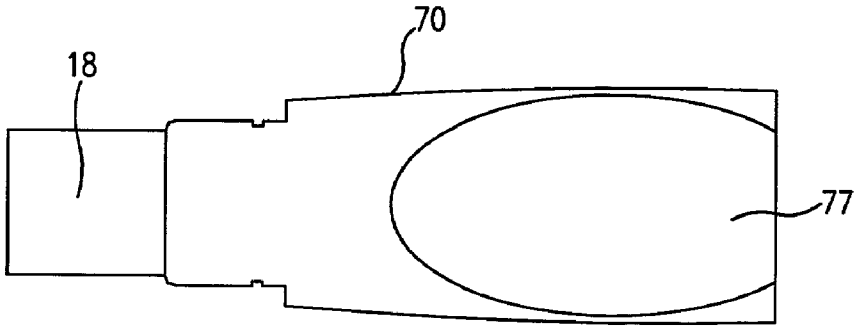

FIG. 4

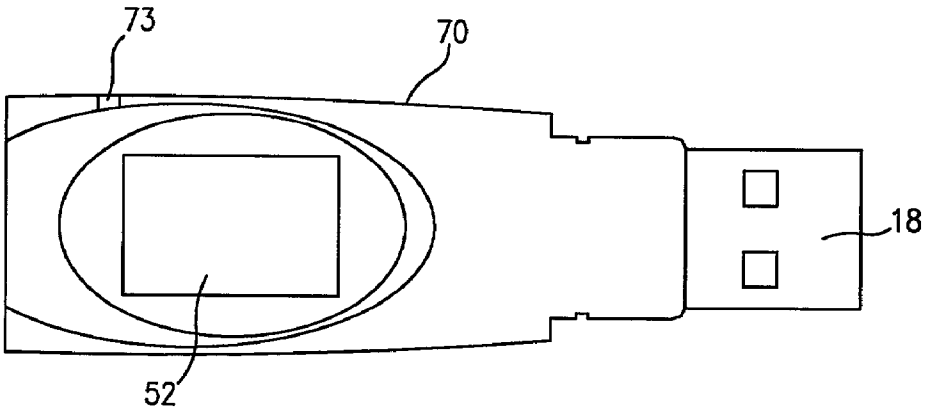

FIG. 5

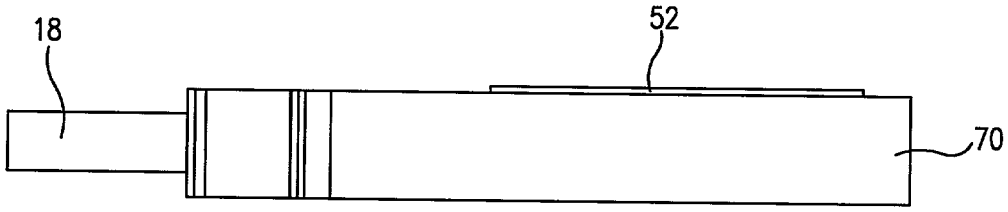

FIG. 6

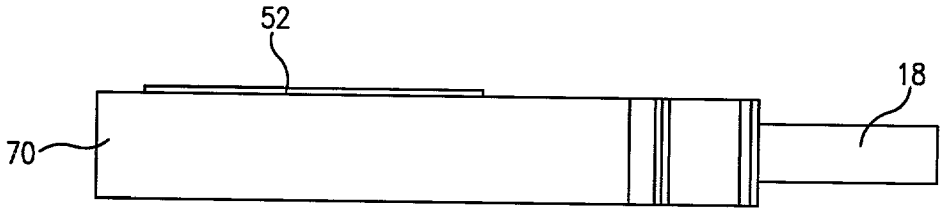

FIG. 7

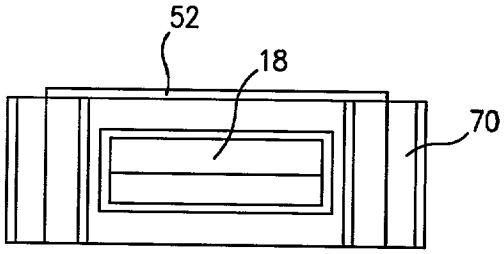

FIG. 8

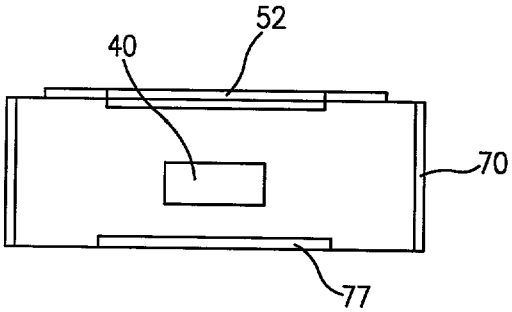

FIG. 9

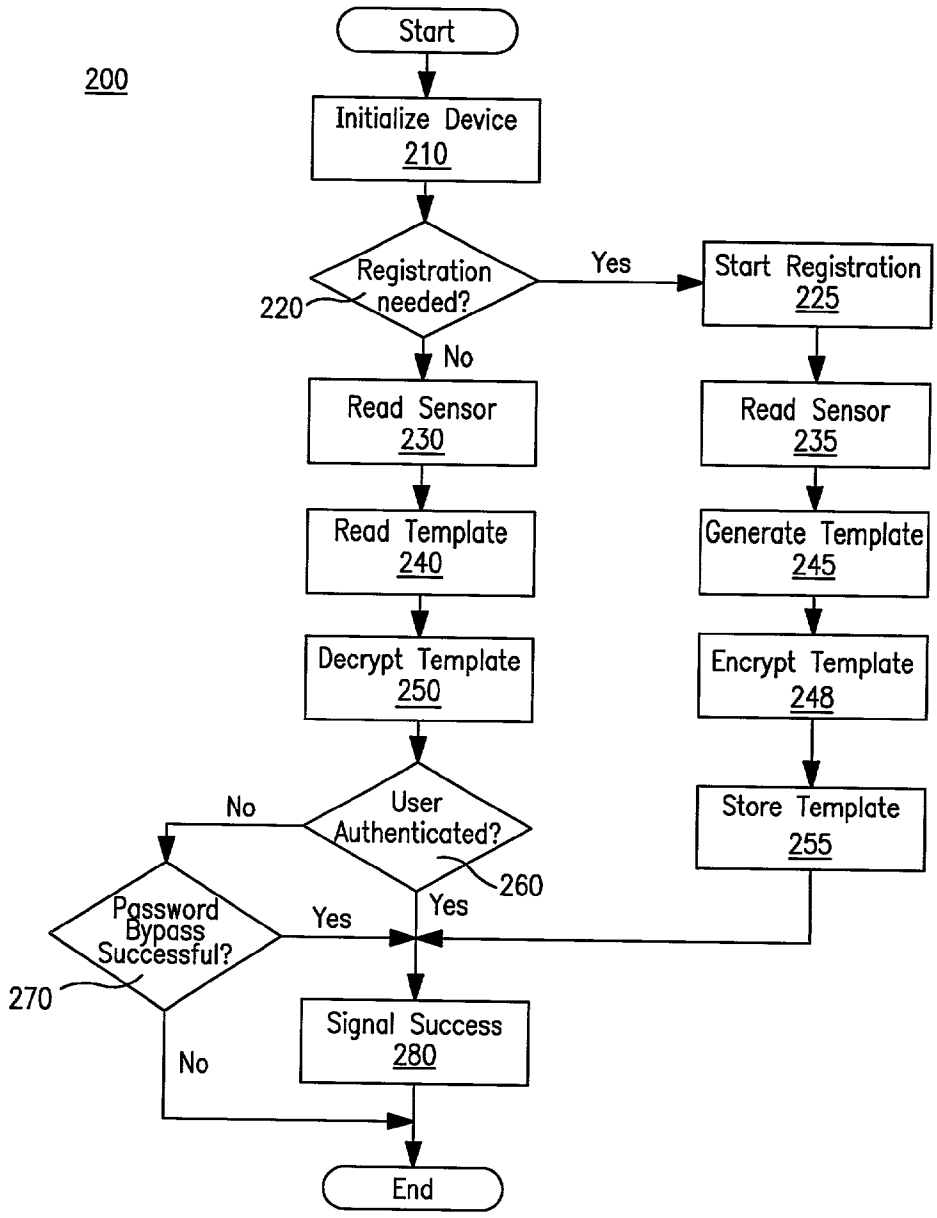
200
Start
Initialize Device
210
Registration needed?
220
Yes
Start Registration
225
No
Read Sensor
230
Read Sensor
235
Read Template
240
Generate Template
245
Decrypt Template
250
Encrypt Template
248
User Authenticated?
260
No
Store Template
255
Password Bypass Successful?
270
Yes
Yes
Signal Success
280
No
End

FIG. 10

PORTABLE DEVICE HAVING BIOMETRICS-BASED AUTHENTICATION CAPABILITIES

FIELD OF THE INVENTION

[0001] The present invention relates to a portable device, and in particular, a portable data storage and access control device having biometrics-based authentication capabilities.

DESCRIPTION OF THE RELATED ART

[0002] Portable data storage devices have become a class of indispensable peripherals that are widely utilized in business, educational and home computing. These devices are generally not permanently fitted to a particular host platform, such as a personal computer (PC). Rather, they can be conveniently removed from and attached to any computer having the appropriate connection port (e.g., a serial bus port like a USB port, an IEEE 1394 ("Firewire") port). Thus, these portable data storage devices enable a user to transfer data among different computers that are not otherwise connected. A popular type of portable storage device utilizes a non-volatile solid-state memory (e.g., flash memory) as the storage medium and so does not require moving parts or a mechanical drive mechanism for accessing the data. The absence of a drive mechanism enables these portable solid-state memory devices to be more compact than surface storage devices such as magnetic disks and CD-ROMs.

[0003] As portable storage devices become more widely used in various institutional and personal computing environments, preventing unauthorized users from accessing information stored on a portable or designated storage media is one of the most significant challenges in information technology today. For example, to secure confidential business information, personal information like medical and financial or other types of sensitive data, it is essential to have a reliable security measure that is simple to use, convenient and provides a level of protection appropriate for the type of information to be secured.

[0004] To date, most portable storage devices have resorted to user passwords as a security measure for protecting against unauthorized data access. While the use of passwords as an authentication mechanism provides some level of protection against unauthorized access, it is often regarded by users as cumbersome and inconvenient due to the need to remember the password and to key it in every time the user requests access. In many systems, a user is also required to periodically change his/her password as an added level of security. This further adds to the inconvenience. Moreover, since a typical user generally needs access to several computer systems and/or networks requiring access control, the user may have to memorize numerous different passwords because they are not necessarily identical on the different systems. Thus, it would be advantageous to provide a reliable authentication mechanism for preventing unauthorized access to information stored on a portable or designated storage media that is not cumbersome or inconvenient for the user.

[0005] In addition, passwords are not unique among different users and are also subject to hacking by many skilled hackers. Once a password has been compromised, whether by inadvertent disclosure by a bona fide user to an unauthorized party or by malicious hacking, confidential data that is supposed to be password-protected are no longer guarded. Indeed, unauthorized access to such information may go unnoticed for extended periods of time. Ongoing intrusions usually remains undeterred until the victimized user finally realizes that the data has been accessed and/or destroyed, or until the system administrator detects a pattern of suspicious activities. Therefore, it would also be advantageous to provide a secured access control mechanism for protection against unauthorized access to data stored in portable storage media and various computer systems which is not easily compromised by hacking and preferably provides a unique "access key" for each individual user.

SUMMARY OF THE INVENTION

[0006] Accordingly, the present invention provides a method and system which delivers a highly reliable and user-friendly authentication mechanism for preventing unauthorized access to information stored on a portable or designated storage media. Furthermore, embodiments of the present invention also provide a highly secure access control mechanism for protection against unauthorized access to stored data and computer resources as well as guarding against unauthorized entry to premises. Aspects of the present invention, which utilizes a unique biometrics marker as a basis for identity authentication and as an "access key" for each individual user, are described in detail herein.

[0007] Specifically, a preferred embodiment of the present invention provides a portable device which includes a microprocessor, a non-volatile memory coupled thereto, and a biometrics-based authentication module controlled by the microprocessor. Preferably, the biometrics technology used is fingerprint authentication technology, and flash memory is used as the non-volatile memory. In this embodiment, the fingerprint authentication module automatically prompts the user to register his/her fingerprint with the portable device upon its first use. In a currently preferred embodiment, a compact and encrypted version of the fingerprint is stored in the portable device's flash memory when the registration process is completed. Upon a subsequent use, the fingerprint authentication module reads the user's fingerprint, compares it with the registered fingerprint stored in the flash memory and reliably determines whether there is a match between the two. If a match is identified, authentication of the user's identity is successful, and the authenticated user is granted access to the restricted resource, the access to which is being safeguarded using the present access control system. On the other hand, if a match cannot be found between the user's fingerprint and the registered fingerprint, access to the restricted resource is denied. As such, this embodiment of the present invention delivers a highly convenient, secured and reliable system for user authentication and access control which is superior to password-based authentication approaches in prior art. The present invention appreciates that fingerprints, being unique signatures for an individual, have been legally and universally accepted for verifying identity for over a century, that they cannot be forgotten by a user, as passwords could, and further that they are almost impossible to alter, duplicate, or crack by hacking. As such, fingerprints and other biometrics-based techniques are well-suited for use as an authentication and/or access control solution, as embodied in the present invention.

[0008] Advantages of the invention will be set forth, in part, in the description that follows and, in part, will be understood by those skilled in the art from the description herein.

BRIEF DESCRIPTION OF THE DRAWINGS

[0009] The accompanying drawings, which are incorporated in and constitute a part of this specification, illustrate several embodiments of the invention and, together with the description, serves to explain the principles of the invention.

[0010] **FIG. 1A** is a block diagram illustrating functional blocks of one embodiment of the portable device of the present invention and an illustrative operational configuration thereof

[0011] **FIG. 1B** is a block diagram illustrating functional blocks of another embodiment of the portable device of the present invention.

[0012] **FIG. 2** is a front perspective view of a portable device with an integrated fingerprint module in accordance with one embodiment of the present invention.

[0013] **FIG. 3** is a rear perspective view of the portable device with an integrated fingerprint module as shown in **FIG. 2**.

[0014] **FIG. 4** is a bottom plan view of the portable device with an integrated fingerprint module as shown in **FIG. 2**.

[0015] **FIG. 5** is a top plan view of the portable device with an integrated fingerprint module as shown in **FIG. 2**.

[0016] **FIG. 6** is a left side elevation view of the portable device with an integrated fingerprint module as shown in **FIG. 2**.

[0017] **FIG. 7** is a right side elevation view of the portable device with an integrated fingerprint module as shown in **FIG. 2**.

[0018] **FIG. 8** is a front elevation view of the portable device with an integrated fingerprint module as shown in **FIG. 2**.

[0019] **FIG. 9** is a rear elevation view of the portable device with an integrated fingerprint module as shown in **FIG. 2**.

[0020] **FIG. 10** is a flow diagram illustrating steps of a user registration/authentication process using a portable device in accordance with one embodiment of the present invention.

DETAILED DESCRIPTION OF PREFERRED EMBODIMENTS

[0021] The present invention now will be described more fully with reference to the accompanying drawings, in which preferred embodiments of the invention are shown. The present invention may, however, be embodied in many different forms and should not be construed as being limited to the embodiments set forth herein; rather these embodiments are provided so that this disclosure will be thorough and complete and will fully convey the invention to those skilled in the art. Indeed, the invention is intended to cover alternatives, modifications and equivalents of these embodiments, which will be included within the scope and spirit of the invention as defined by the appended claims. Furthermore, in the following detailed description of the present invention, numerous specific details are set forth in order to provide a thorough understanding of the present invention. However, it will be clear to those of ordinary skill in the art that the present invention may be practiced without such specific details. In other instances, well known methods, procedures, components, and circuits have not been described in detail as not to unnecessarily obscure aspects of the present invention.

[0022] **FIG. 1A** is a block diagram illustrating functional blocks of one embodiment of the portable device of the present invention and an illustrative operational configuration thereof **FIG. 1A** shows a portable device **70** coupled to a host platform **90**. In this embodiment, host platform **90** is coupled to a power supply circuit **80** located in portable device **70**. Power supply circuit **80** draws power from host platform **90** and serves as a power source for various components of portable device **70**.

[0023] Referring still to **FIG. 1**A, portable device **70** further includes an integrated circuit **10**, a flash memory **20**, a volatile memory **30** and a fingerprint module **50**. Integrated circuit **10** can be conveniently implemented as an application-specific integrated circuit (ASIC). In a currently preferred embodiment, flash memory **20** can have a storage capacity between 8 MB and 512 MB, a portion of which can be used to store one or more templates generated in accordance with the present invention as described below. Moreover, in a preferred embodiment, the template(s) are stored in a reserved area of flash memory **20** which is specifically designated for this purpose and which is not otherwise accessible to the user. Additionally, as described in detail further below, a template is encrypted before it is stored in flash memory **20** in a currently preferred embodiment, thereby providing added security against hacking. In one embodiment, volatile memory **30** is external to integrated circuit **10** and can comprise either a dynamic random access memory (DRAM) or a static random access memory (SRAM). Among other uses, volatile memory **30** can serve as an initial storage and staging area for a fingerprint image captured in accordance with the present invention.

[0024] Integrated circuit **10** comprises a microprocessor **11** which, in one embodiment, is a RISC processor. In a currently preferred embodiment, an authentication engine **12** is included in integrated circuit **10**. Authentication engine **12** in turns comprises a template generator **12***a* and a verification module **12***b*. Template generator **12***a* is used to generate an encoded version of an image of a fingerprint. Within the scope of the present invention, such an encoded fingerprint image is referred to as a template. It should be appreciated that according to current biometrics technology, a fingerprint can be uniquely identified using between 8 and 13 distinct points in the raw image of the fingerprint. Fingerprint information can thus be conveniently stored in a condensed fashion as data pertaining to the 8 to 13 relevant data points. A preferred embodiment of the present invention advantageously stores a fingerprint in a compact format as a template referred to above. In this embodiment, a template has a size of 512 bytes. Other embodiments can use templates of different sizes. The other component of authentication engine **12**, verification module **12***b*, is used to compare a newly generated template against a stored template to validate the authenticity of a fingerprint provided by someone purporting to be an authorized user. Thus, authentication

engine **12** works in conjunction with fingerprint module **50**, described in greater detail below, to implement user authentication in accordance with the present invention.

[**0025**] It should be appreciated that authentication engine **12** is well-adapted to numerous implementations within the scope of the present invention. In one embodiment, authentication engine **12** is implemented as firmware stored in a non-volatile memory within portable device **70**. In another embodiment, authentication engine **12** is implemented as part of microprocessor **11**. In still another embodiment, authentication engine **12** is implemented as a processor separate from microprocessor **11**. In yet another embodiment, authentication engine **12** includes the same components and serves the same functions as described herein, but is located in host platform **90** rather than in portable device **70**. In other words, within the scope of the present invention, authentication engine **12** is not required to reside in portable device **70**. Instead, where authentication engine **12** is to be placed is a design choice, thus affording design flexibility to suit different applications in which the present invention can be utilized.

[**0026**] Referring still to **FIG. 1**A, in a preferred embodiment, integrated circuit **10** also comprises a bus interface **13** which facilitates communication between integrated circuit **10** and other components, such as volatile memory **30**. Integrated circuit **10** further includes a flash controller **14** for controlling access to flash memory **20**. In one embodiment, upon the successful generation of a template during user registration, flash controller **14** communicates with template generator **12***a* to store the newly generated template into flash memory **20** for use in subsequent user authentication. Moreover, in a currently preferred embodiment, portable device **70** is compatible with the universal serial bus (USB) standard and includes a USB connector (not shown). In this embodiment, integrated circuit **10** also includes a USB device controller **15**, which serves to control the communication between portable device **70** and host platform **90**, such as a USB-compatible personal computer (PC) having a USB host controller **93** therein.

[**0027**] With reference still to **FIG. 1**A, integrated circuit **10** also includes a volatile memory **16** and a non-volatile memory **17**. In a preferred embodiment, volatile memory **16** is a random access memory (RAM) that serves as a working memory for microprocessor **11** during its operation. Non-volatile memory **17** is a read-only memory (ROM) in this embodiment and can be used to store firmware that perform various functions of portable device **70**. Additionally, integrated circuit **10** includes an optional error checking (ECC) engine **19** for performing various error checking tasks during the operation of portable device **70**. It should be appreciated that ECC engine **19**, like authentication engine **12**, is well-suited to numerous implementations within the scope of the present invention. For example, ECC engine **19** can be implemented by software (e.g., firmware stored in a non-volatile memory), as part of microprocessor **11**, or as a processor unit separate from microprocessor **11**.

[**0028**] Referring again to **FIG. 1**A, fingerprint module **50** comprises a sensor **52** which is used to capture the fingerprint image of a finger being placed thereon. Fingerprint module **50** also comprises a converter **54**, which serves to convert a captured fingerprint image into electrical signals representing the image. In a currently preferred embodiment, a fingerprint print image is converted into 64 KB of data by converter **54** and sent to volatile memory **30** of portable device **70** for temporary storage. In other embodiments, converter **54** can produce image data of different sizes. Fingerprint module **50** further includes an optional control unit **56** which, in a currently preferred embodiment, is controlled via microprocessor **11** in portable device **70** and is used for checking the quality of fingerprint images captured by sensor **52** to determine whether a given image is acceptable or not. As described in more detail below, if it is determined that the quality of a captured image is unacceptable, the user will be prompted to place his/her finger on sensor **52** again so that a new image can be captured.

[**0029**] Reference is now made to **FIG. 1**B, which is a block diagram illustrating functional blocks of another embodiment of the portable device of the present invention. In this embodiment, portable device **170** is compatible with the USB standard and includes a USB plug **118** which, as **FIG. 1B** shows, is coupled to a USB host controller **193** of a host platform. Optionally, portable device **170** further includes an additional USB port **162** that is coupled to USB plug **118**. USB port **162** is provided as a convenient feature that can be used to couple other USB-compatible device(s) to the USB via portable device **170**. In this embodiment, portable device **170** also includes a USB device controller **115** for controlling the communication between portable device **170** and the host platform via USB host controller **193**. In one embodiment, a driver software **177** and an application programming interface (API) **197**, which in turn includes monitoring software **199**, reside in the host platform and communicate with USB host controller **193** to facilitate the operation of portable device **170**.

[**0030**] Portable device **170** further comprises an integrated circuit **110**, a flash memory **120** and a volatile memory **130**. Integrated circuit **110** can be conveniently implemented as an ASIC. In a preferred embodiment, a reserved area **122** of flash memory **120** is used to store one or more templates generated in accordance with the present invention. Furthermore, in this embodiment, reserved flash memory area **122** includes a status flag **121** which indicates whether or not portable device **170** has been previously registered in accordance with the present invention. Status flag **121** thus enables portable device **170** to automatically invoke a registration process upon its initial use, as described in detail further below. In one embodiment, volatile memory **130** comprises either a DRAM or a SRAM, which serves as an initial storage area for a fingerprint image captured in accordance with the present invention.

[**0031**] Referring still to **FIG. 1**B, integrated circuit **110** comprises a microprocessor **111** which preferably is a RISC processor. Integrated circuit **110** further includes a flash controller **114** for controlling access to flash memory **120** and a memory controller **133** for controlling access to volatile memory **130**. Integrated circuit **110** also includes a volatile memory **116** and a non-volatile memory **117**. Preferably, volatile memory **116** comprises a RAM for use as a working memory for microprocessor **111** during its operation, while non-volatile memory **117** comprises a ROM for storing firmware that perform various functions of portable device **170**. Specifically, in one embodiment, ROM **117** stores the following firmware code: firmware **117***a* for reading fingerprint sensor **152**, firmware **117***b* for processing fingerprint images, firmware **117***c* for generating templates,

firmware **117***d* for encrypting fingerprint images and/or templates, and firmware **117***e* for verifying fingerprint authenticity. Nevertheless, it should be appreciated that in an alternative embodiment of the present invention, such firmware can be stored in a non-volatile memory within the host platform rather than in portable device **170**.

[**0032**] Additionally, integrated circuit **110** includes an optional error checking (ECC) engine **119** for performing various error checking tasks during the operation of portable device **170**. It should be appreciated that ECC engine **119** can be implemented as software (e.g., firmware) or hardware (e.g., processor/processor module) within the scope of the present invention.

[**0033**] Referring still to **FIG.** 1B, fingerprint module **150** comprises a sensor **152**, a converter **154** and an optional controller **156**. In this embodiment, sensor **152** is used to capture the fingerprint image of a finger being placed thereon, converter **154** serves to convert a captured fingerprint image into electrical signals representing the image, and optional controller **156** is used to check the quality of fingerprint images captured by sensor **152** to determine whether a given image is acceptable or not. It should be appreciated that such image processing capabilities can be implemented using software (e.g., firmware) or hardware (e.g., processor/processor module) within the scope of the present invention.

[**0034**] In a currently preferred embodiment as illustrated in **FIG.** 1B, microprocessor **111** controls various components of portable device **170**, including flash controller **114**, USB device controller **115**, RAM **116**, ROM **117** (and execution of firmware code stored therein), ECC engine **119**, memory controller **133**, and controller **156** of fingerprint module **150**. In this embodiment, portable device **170** also includes a write-protection switch **140** which, when activated, triggers microprocessor **111** to disable write-access to flash memory **120**.

[**0035**] With reference next to **FIG. 2, a** front perspective view of a portable device with an integrated fingerprint module in accordance with one embodiment of the present invention is shown. In **FIG. 2**, portable device **70** is shown with USB connector **18** protruding from its front end. Fingerprint module **50** is shown as being structurally integrated with portable device **70** in a unitary construction, with sensor **52** disposed on the top side of portable device **70**. A light emitting diode (LED) **73** is also shown disposed near the edge of the top side of portable device **70**. In one embodiment, LED **73** flashes when data in portable device is being accessed, thus serving as an activity indicator. In another embodiment, LED **73** lights up to indicate that an authentication process is underway.

[**0036**] Referring next to **FIG. 3, a** rear perspective view of the portable device with an integrated fingerprint module as depicted in **FIG. 2** is shown. Again, portable device **70** is shown with USB connector **18** protruding from its front end, and fingerprint module **50** is shown as being structurally integrated with portable device **70** in a unitary construction, with sensor **52** disposed on the top side thereof LED **73** is again shown disposed near the edge of the top side of portable device **70**. Optional write protection switch **40** is also shown as being located at the rear end of portable device **70**.

[**0037**] Reference is now made to **FIG. 4**, which shows a bottom plan view of the portable device with an integrated fingerprint module as illustrated in **FIG. 2**. A substantially semicircular indentation **77**, an optional feature which allows a user to hold portable device **70** firmly while coupling or decoupling portable device **70** to/from host platform **90** (**FIG. 1A**), is shown on the bottom side of portable device **70** in **FIG. 4**. USB connector **18** is also shown.

[**0038**] Referring next to **FIG. 5, a** top plan view of the portable device with an integrated fingerprint module as shown in **FIG. 2** is depicted. Portable device **70** is shown with USB connector **18** protruding from its front end, and fingerprint module **50** is shown as being structurally integrated with portable device **70** in a unitary construction, with sensor **52** disposed on the top side thereof LED **73** is again shown disposed near the edge of the top side of portable device **70**.

[**0039**] Reference is now made to **FIG. 6**, which is a left side elevation view of the portable device with an integrated fingerprint module as shown in **FIG. 2**. USB connector **18** is shown protruding from the front of portable device **70**, and the periphery of sensor **52** is shown slightly raised from the top side of portable device **70**.

[**0040**] Next, **FIG. 7** is a right side elevation view of the portable device with an integrated fingerprint module as shown in **FIG. 2**. Once again, USB connector **18** is shown protruding from the front of portable device **70**, and the periphery of sensor **52** is shown slightly raised from the top side of portable device **70**.

[**0041**] Referring next to **FIG. 8, a** front elevation view of the portable device with an integrated fingerprint module as shown in **FIG. 2** is depicted. The insertion end of USB connector **18** is centrally depicted, and the periphery of sensor **52** is shown slightly raised from the top side of portable device **70**.

[**0042**] Reference is now made to **FIG. 9**, which is a rear elevation view of the portable device with an integrated fingerprint module as shown in **FIG. 2**. The periphery of sensor **52** is shown slightly raised from the top side of portable device **70**, and optional indentation **77** on the bottom side of portable device **70** is also visible. Optional write protection switch **40** is also shown as being located at the rear end of portable device **70**.

[**0043**] Referring next to **FIG. 10, a** flow diagram **200** illustrating steps of a user registration/authentication process using the portable device with an integrated fingerprint module in accordance with one embodiment of the present invention is shown. In the following description, various modules and components referred to have been described above with reference to **FIG. 1A** using the same reference numerals. In step **210**, upon being coupled to a host platform, portable device **70** undergoes an initialization procedure. In a currently preferred embodiment, the initialization procedure involves establishing communication with the host platform and ensuring the host platform is aware that portable device **70** has been coupled thereto.

[**0044**] In step **220**, portable device **70** determines whether a user registration is necessary. For example, if portable device **70** is being used for the first time and no template has yet been stored in flash memory **20**, portable device **70** will guide the user to complete a registration process (steps **225**, **235**, **245** and **255** as described below) via a user interface

(e.g., pop-up message windows) through the host platform. Thus, upon the first use of portable device **70** (e.g., immediately after purchase), a preferred embodiment automatically initiate the registration process to generate the first ("master") template. This is preferably accomplished by checking a status flag (e.g., flag **121** in flash memory **120** of **FIG. 1B**). Subsequent registration(s), as described below, can be activated by individual users via software on the host platform.

[**0045**] In one embodiment, portable device **70** supports more than one user. In another embodiment, the same user may register multiple fingerprints as separate templates. In yet another embodiment, the same user fingerprint may be registered multiple times as different templates. Thus, portable device **70** can facilitate the registration of additional user(s) and/or additional template(s) either by periodically (e.g., upon startup) inquiring whether a new user/template needs to be added or upon the user's request in step **220**. If an additional user/template is to be registered, the registration process will be invoked. If it is determined that no new registration is necessary, process **200** proceeds with an authentication process (steps **230**, **240** and **260** as described below).

[**0046**] It should be appreciated that within the scope of the present invention, software (e.g., a software driver) may need to be installed on the host platform prior to the first use of portable device **70** to enable its utilization of the host platform's user interface to communicate with the user. It should also be appreciated that if the operating system of the host platform has built-in support for such functionality, no additional software needs to be installed thereon.

[**0047**] Referring still to **FIG. 10**, the registration process is now described. In step **225**, the registration process is initiated. In one embodiment, this involves informing the user that a registration process will commence and prompting the user to place his/her finger on sensor **52**.

[**0048**] In step **235**, sensor **52** is read to capture an image of the fingerprint of the user's finger that has been placed thereon. In a currently preferred embodiment, step **235** also includes verifying that the captured image is of sufficient quality for further processing (e.g., template generation). This is preferably performed by control unit **56** as directed by microprocessor **11**. In one embodiment, step **235** will be repeated if the quality of the captured fingerprint image is unacceptable. Under such circumstances, the user will be prompted to place his/her finger on sensor **52** again so that a new image can be captured. Preferably, the number of retry is user-configurable.

[**0049**] Once an acceptable fingerprint image has been captured in step **235**, process **200** proceeds to step **245**, wherein a template is generated based on the captured fingerprint image. As described above, in a preferred embodiment, the captured image is converted into 64 KB of data, which is then used as input to template generator **12***a* for generating a 512-byte template.

[**0050**] In step **248**, the template generated in step **245** is encrypted. In one embodiment, the encryption is performed by firmware (e.g., encryption firmware **117***d* of **FIG. 1B**), thereby providing an added level of security against hacking.

[**0051**] In step **255**, the encrypted template is stored into flash memory **20**. In one embodiment, upon successful generation and encryption of a template, flash controller **14** is prompted by template generator **12***a* to store the newly generated and encrypted template into flash memory **20** for use in subsequent user authentication. Moreover, as described above, in a preferred embodiment, the template is stored in a reserved area of flash memory **20** which is specifically designated for storing template(s) and which is not otherwise accessible to the user.

[**0052**] In step **280**, a signal or message indicating the successful completion of the registration process is generated. In an embodiment where portable device **70** is used as a secure storage device, step **280** can also entail enabling portable device, i.e., granting the newly registered user access (e.g., read data therefrom and write data thereto) to portable device **70** and mapping portable device **70** to a valid drive letter on host platform **90**.

[**0053**] With reference still to **FIG. 10**, the authentication process is now described. In step **230**, sensor **52** is read to capture an image of the fingerprint of the user's finger that has been placed thereon. In a currently preferred embodiment, step **230** also includes a quality check of the captured image by control unit **56**, so that the image capture will be repeated if the quality of the captured fingerprint image is unacceptable for template generation. If a repeat capture is needed, the user will be so prompted. Preferably, the number of retry is user-configurable. In a currently preferred embodiment, step **230** also includes generating a template based on the captured fingerprint image and storing the resulting template into volatile memory **16**.

[**0054**] In step **240**, the stored template(s) are read from flash memory **20** for use as the basis of authenticating the identity of the user whose fingerprint image has been captured in step **230**. In a currently preferred embodiment, microprocessor **11** directs flash controller **14** to retrieve the registered template(s) from flash memory **20**.

[**0055**] In step **250**, the registered template(s) read from flash memory **20**, which are stored in encrypted form in a preferred embodiment, are decrypted. The decrypted template(s) are loaded into volatile memory **16** in one embodiment.

[**0056**] In step **260**, it is determined whether the user's fingerprint can be authenticated against the registered fingerprint template on record. In a currently preferred embodiment, verification module **12***b* compares the template pending verification against the registered template(s). If a match is detected, the user is authenticated; otherwise, authentication fails. In one embodiment, the user is allowed to reattempt the authentication process if an initial attempt fails (e.g., steps **230**, **240** and **250** are repeated). Preferably, the number of repeated attempts is user-configurable and can be set once an authorized user has been authenticated and granted access.

[**0057**] In one embodiment, when a user has failed to authenticated his/her identity as an authorized user, access to flash memory **20** will be blocked (e.g., in an embodiment where a software driver resides in host platform **90**, the software driver can forbid such access). In another embodiment, microprocessor **11** in portable device **70** will shut down or otherwise disable flash controller **14** upon such authentication failure. These actions serve as added security measures against potential hacking and other forms of

unauthorized access to the data stored in flash memory **20** and are triggered by repeated failed authentication attempts.

[**0058**] In one embodiment, optional step **270** is provided. In this embodiment, should verification module **12***b* malfunction and refuse to authenticate an authorized user whose fingerprint has been previously registered, the user is provided with an option to bypass the fingerprint authentication and provide a password to gain access instead. This embodiment affords the user the ability to avoid a helpless situation where access to contents of flash memory **20** cannot be had unless and until verification module **12***b* is fixed. If the bypass password is correctly entered, user authentication is deemed to be successful; otherwise, user authentication remains a failure. It should also be appreciated that if added security is desired, a password requirement can be implemented in addition to the fingerprint authentication even for normal routine authentication within the scope of the present invention.

[**0059**] In step **280**, a signal or message indicating the successful authentication is generated. In an embodiment where portable device **70** is used as a secure storage device, step **280** can also entail enabling portable device, i.e., granting the newly registered user access (e.g., read data therefrom and write data thereto) to portable device **70** and mapping portable device **70** to a valid drive letter on host platform **90**.

[**0060**] It should be appreciated that in an embodiment where authentication engine **12** is located in host platform **90**, appropriate modifications to the authentication process described above are needed. In particular, once a satisfactory fingerprint image has been obtained in step **230**, the image data is first encrypted and then transmitted to host platform **90**, wherein the steps to be performed by authentication engine **12** will be carried out. Thus, depending on the particular implementation or application, the information being transmitted from portable device **70** to host platform **90** can either be a simple notification of success upon successful authentication, or image data representing a user fingerprint that is pending authentication.

[**0061**] In a currently preferred embodiment, performance of various steps of process **200** are controlled by microprocessor **11** executing firmware code, which is preferably stored in nonvolatile memory **17** of portable device **70**.

[**0062**] Significantly, it should be appreciated that the present invention not only contemplates using portable device **70** as a secure data storage device but also as an access control device. In particular, within the scope of the present invention, portable device **70** can act as an "access key" to host platform **90** to which portable device **70** is coupled. More specifically, in one embodiment, in order to access any resource on host platform **90** (e.g., data, files, application programs, peripherals) and/or any resource attached thereto (e.g., network access, network printers and storage devices, electronic mail) a user is required to first successfully authenticate his/her identity as an authorized user using portable device **70** with integrated fingerprint module **50**. In accordance with this embodiment, such fingerprint authentication is used preferably in lieu of (or alternatively in addition to) conventional password-based authentication. Thus, the user inconvenience and less stringent security that is inherent in the prior art password-based authentication approach is advantageously eliminated in accordance with the present invention.

[**0063**] Beyond access control to various computer resources, the present invention can also be advantageously utilized in numerous other applications that require security clearance, such as entry into private homes, offices, hotel rooms, bank vaults and security deposit boxes, and so on. The present invention can also be beneficially applied to restrict the operation of machinery, such as factory machines and vehicles, to those who have been properly trained. In one embodiment, access control device **70** can be used as a house key to a private home or room key to a hotel room in place of conventional keys. In the first example, the home owner first registers his/her fingerprint when the biometrics-based lock is installed at the house. In the latter example, a hotel guest first registers his/her fingerprint upon check-in at a hotel. Thereafter, access to the house or hotel room is securely restricted to the respective key holder (home owner or hotel guest). These and other wide-ranging applications of the biometrics-based access device technology disclosed herein are all intended to be within the scope and spirit of the present invention.

[**0064**] Although embodiments of the present invention have been described herein as using fingerprint authentication technology to implement access control, it should be appreciated that the present invention is not limited thereto but rather encompasses the use of other biometrics-based authentication techniques. One such technique is iris scan technology. While such other biometrics-based techniques are not expressly described herein, their applicability to access control implementations using a portable device is within the scope and spirit of the present invention disclosed.

[**0065**] Moreover, while preferred embodiments of the present invention have been described herein as using flash memory as a storage media, it should be appreciated that other types of non-volatile memory, such as ferroelectric random access memory (FRAM) or magnetic random access memory (MRAM), can also be used within the scope of the present invention. In addition, while such preferred embodiments have been described herein as being compatible with the USB standard, the portable device of the present invention is not intended to be restricted thereto. Rather, the present invention is intended to encompass portable devices that support other communication protocols and/or bus standards, such as the IEEE 1394 ("Firewire") standard.

[**0066**] While preferred embodiments of the present invention, a method and system for implementing access control using biometrics-based technology, have been described, it is understood that those skilled in the art, both now and in the future, may make various improvements and enhancements which fall within the scope of the claims that follow. These claims should be construed to maintain the proper protection for the invention first disclosed herein.

What is claimed is:

1. A portable device comprising:

a microprocessor; and

a biometrics-based authentication module coupled to and controlled by the microprocessor, wherein access to a restricted resource, the restricted resource having a communication port communicatively coupled to the portable device, is granted to a user provided that the biometrics-based authentication module authenticates

the user's identity and wherein access to the restricted resource is denied to the user otherwise.

2. The portable device as recited in claim 1 wherein the biometrics-based authentication module is a fingerprint authentication module.

3. The portable device as recited in claim 1 which is communicatively coupled to the communication port of the restricted resource via a universal serial bus (USB).

4. The portable device as recited in claim 1 wherein the biometrics-based authentication module comprises a biometrics sensor fitted on one surface of the portable device.

5. The portable device as recited in claim 1 further comprising a non-volatile memory capable or storing biometrics information usable for authentication.

6. The portable device as recited in claim 1 wherein the microprocessor is configured to provide a bypass mechanism for authentication upon a determination of authentication failure by the biometrics-based authentication module.

7. The portable device as recited in claim 1 wherein the restricted resource comprises a host computer.

8. The portable device as recited in claim 1 wherein the restricted resource comprises a communication network.

9. The portable device as recited in claim 1 wherein the restricted resource is a real estate premises that imposes access restrictions.

10. The portable device as recited in claim 1 wherein the restricted resource is an operable machinery, the safe operation of which requires training.

11. A biometrics-based access control system for controlling access to a restricted resource, comprising:

a portable device which includes a non-volatile memory and a biometrics-based authentication module coupled thereto, wherein the biometrics-based authentication module is configured to (1) capture a first biometrics marker; (2) store the first biometrics marker in the non-volatile memory; (3) capture a second biometrics marker; and (4) determine whether the second biometrics marker can be authenticated against the first biometrics marker, and wherein access to the restricted resource is granted upon a determination of successful authentication and wherein access to the restricted resource is denied otherwise.

12. The biometrics-based access control system as recited in claim 11 wherein the biometrics-based authentication module is a fingerprint authentication module.

13. The biometrics-based access control system as recited in claim 11 wherein the portable device is communicatively coupled to a communication port of the restricted resource via a universal serial bus (USB).

14. The biometrics-based access control system as recited in claim 11 wherein the biometrics-based authentication module comprises a biometrics sensor which is structurally integrated with the portable device in a unitary construction, the biometrics sensor being disposed on one surface of the portable device.

15. The biometrics-based access control system as recited in claim 11 wherein the non-volatile memory of the portable device comprises flash memory.

16. The biometrics-based access control system as recited in claim 11 wherein a bypass mechanism for authentication is provided upon a determination of authentication failure by the biometrics-based authentication module.

17. A biometrics-based access control method for controlling access to a restricted resource and implemented using a portable device, the method comprising the steps of:

(a) obtaining a first biometrics marker from a user with a biometrics sensor installed on the portable device;

(b) retrieving a registered biometrics marker from a memory of the portable device, the registered biometrics marker having been stored therein during a registration process;

(c) comparing the first biometrics marker against the registered biometrics marker; and

(d) granting the user access to the restricted resource provided that a match is identified in said step (c).

18. The biometrics-based access control method as recited in claim 17 wherein the registered biometrics marker is a fingerprint.

19. The biometrics-based access control method as recited in claim 17 wherein the registered biometrics marker is stored in an encrypted format.

20. The biometrics-based access control method as recited in claim 17 further comprising the step of denying the user access to the restricted resource provided that a match is not identified in said step (c).

21. The biometrics-based access control method as recited in claim 17 further comprising the step of providing the user with a bypass authentication procedure provided that a match is not identified in said step (c).

* * * * *