US 20110038410A1

(19) United States

(12) Patent Application Publication

(10) Pub. No.: US 2011/0038410 A1

(43) Pub. Date: Feb. 17, 2011

Narroschke et al.

(54) **ADAPTIVE CODING OF A PREDICTION ERROR IN HYBRID VIDEO CODING**

(76) Inventors: **Matthias Narroschke**, Rodgau Dudenhofen (DE); **Hans-Georg Musmann**, Salzgitter (DE)

Correspondence Address:
SEED INTELLECTUAL PROPERTY LAW GROUP PLLC
701 FIFTH AVE, SUITE 5400
SEATTLE, WA 98104 (US)

(21) Appl. No.: **12/160,418**

(22) PCT Filed: **Dec. 22, 2006**

(86) PCT No.: **PCT/EP2006/012492**

§ 371 (c)(1), (2), (4) Date: **Nov. 1, 2010**

Related U.S. Application Data

(60) Provisional application No. 60/766,300, filed on Jan. 9, 2006.

Publication Classification

(51) **Int. Cl.**
H04N 11/04 (2006.01)
H04N 7/12 (2006.01)

(52) **U.S. Cl.** **375/240.03**; 375/240.02; 375/E07.126; 375/E07.127

(57) **ABSTRACT**

The present invention relates to a method for coding a video signal using hybrid coding, comprising: reducing temporal redundancy by block based motion compensated prediction in order to establish a prediction error signal, deciding whether to transform the prediction error signal into the frequency domain, or to maintain the prediction error signal in the spatial domain for encoding.

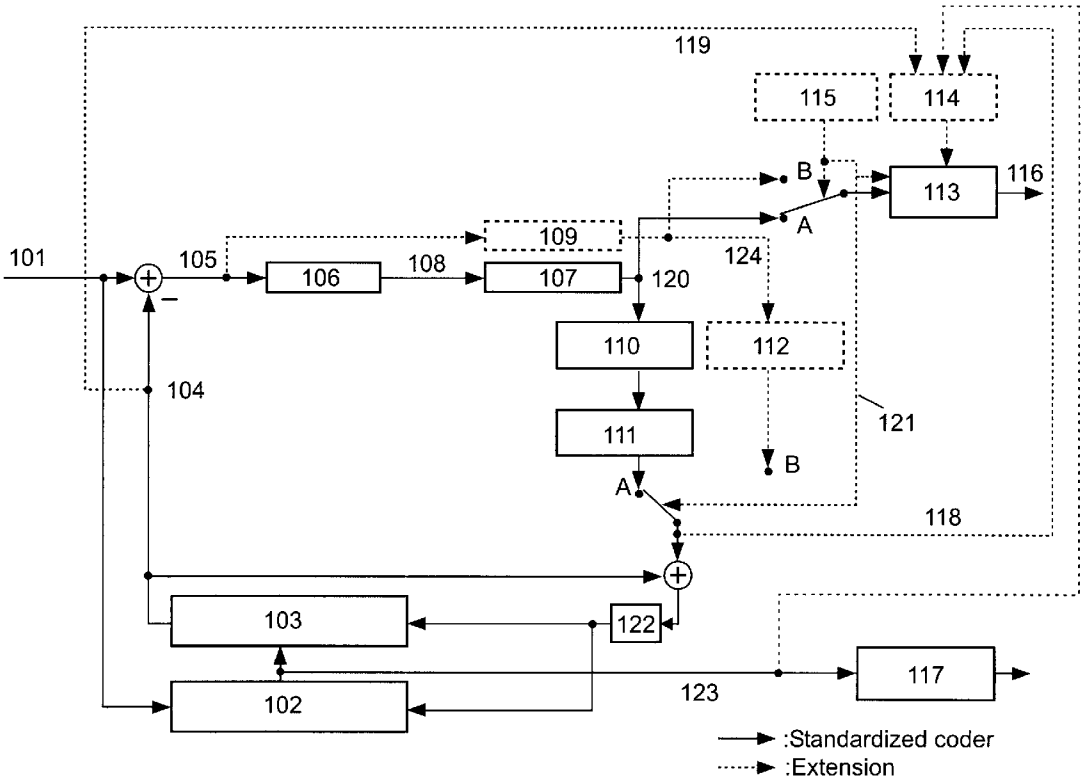

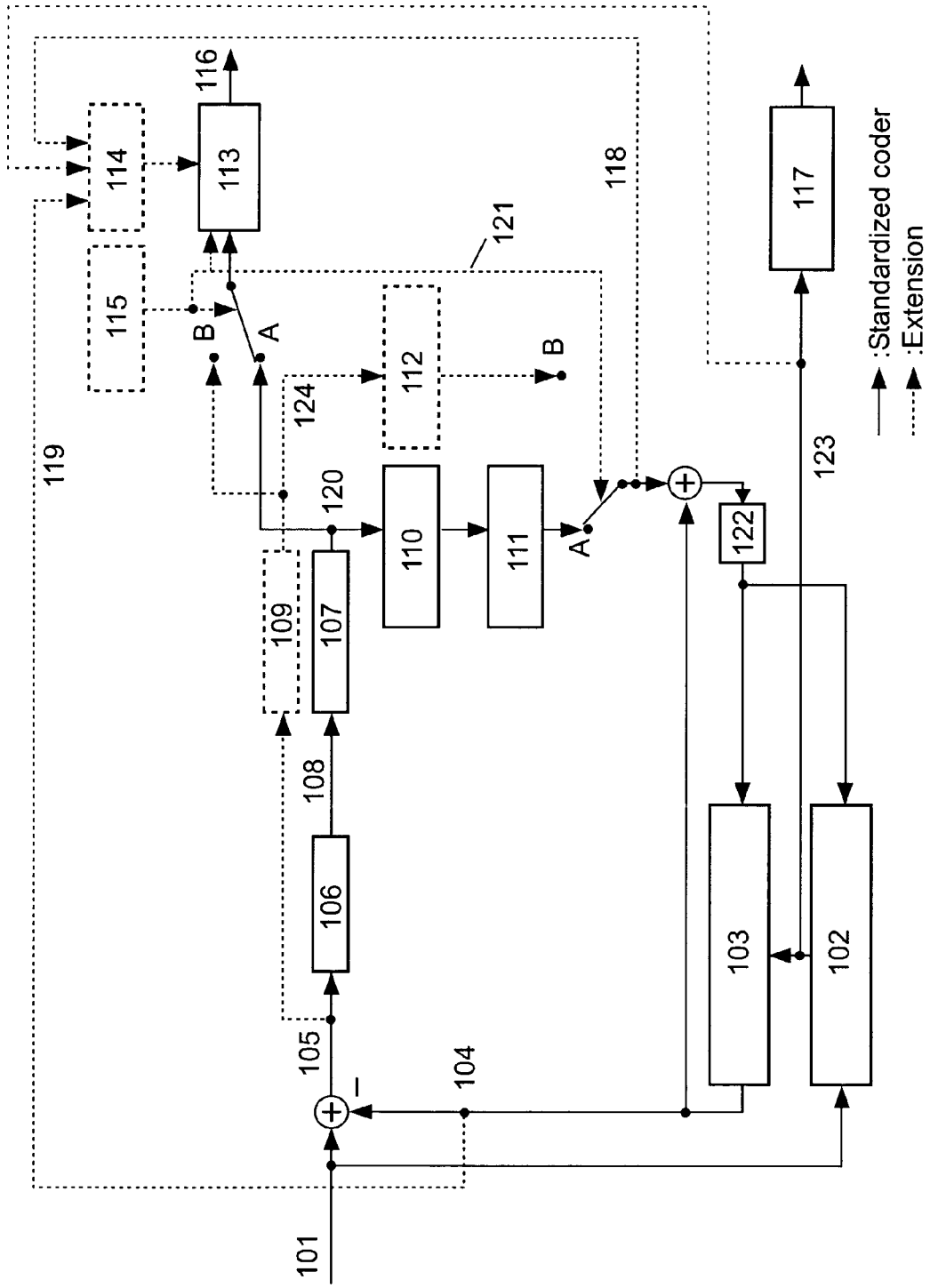
101
102
103
104
105
106
107
108
109
110
111
112
113
114
115
116
117
118
119
120
121
122
123
124
A
B
:Standardized coder
:Extension

Fig.1

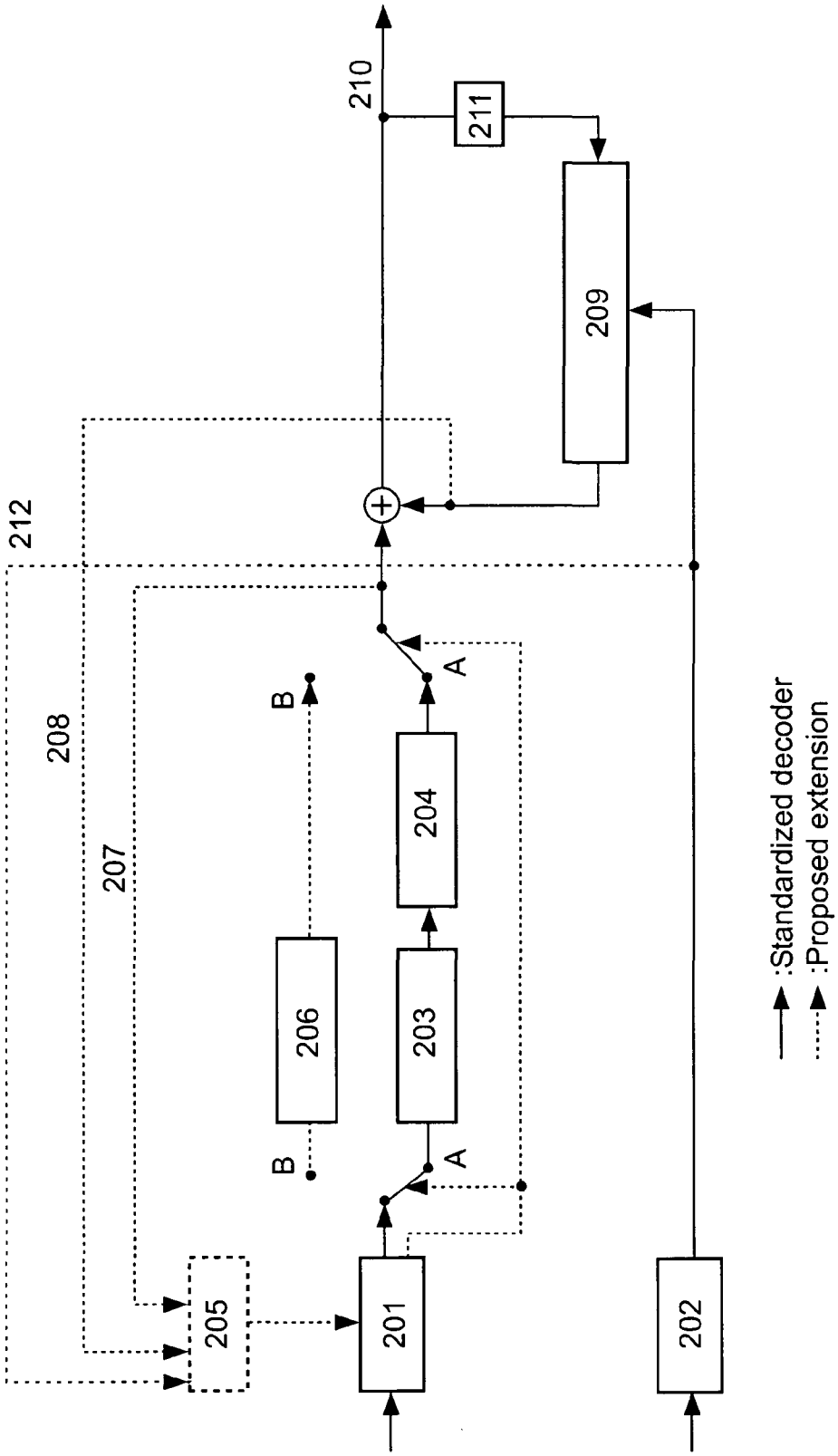
210
211
209
212
208
207
B
A
204
206
203
B
A
205
201
202
:Standardized decoder
:Proposed extension

Fig.2

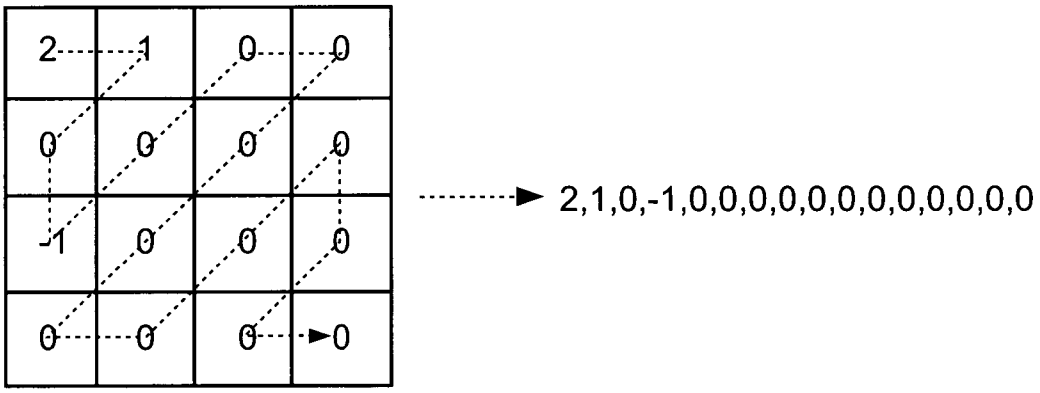

Fig.3

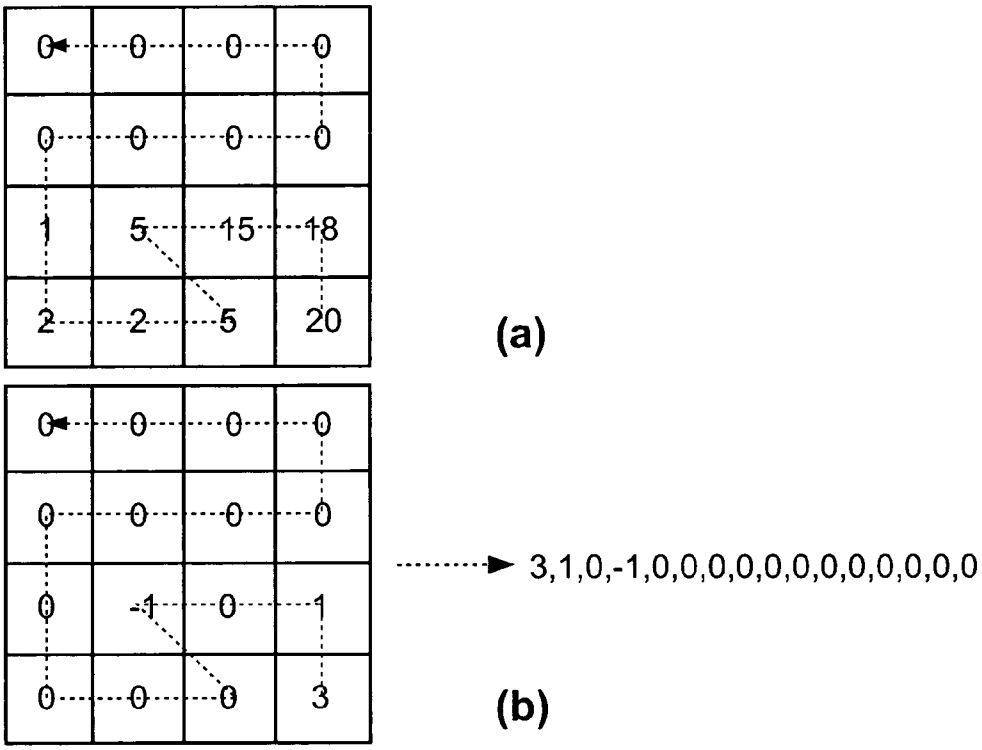
0 0 0 0
0 0 0 0
1 5 15 18
2 2 5 20
(a)
0 0 0 0
0 0 0 0
0 -1 0 1
0 0 0 3
(b)
3,1,0,-1,0,0,0,0,0,0,0,0,0,0,0,0

Fig.4

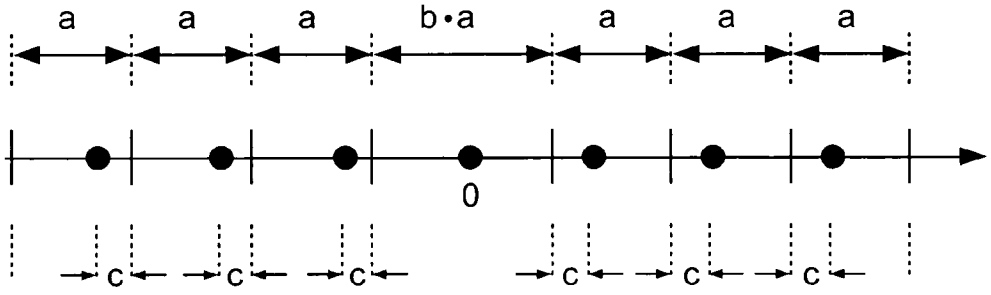
a a a b•a a a a
0
c c c c c c

Fig.5

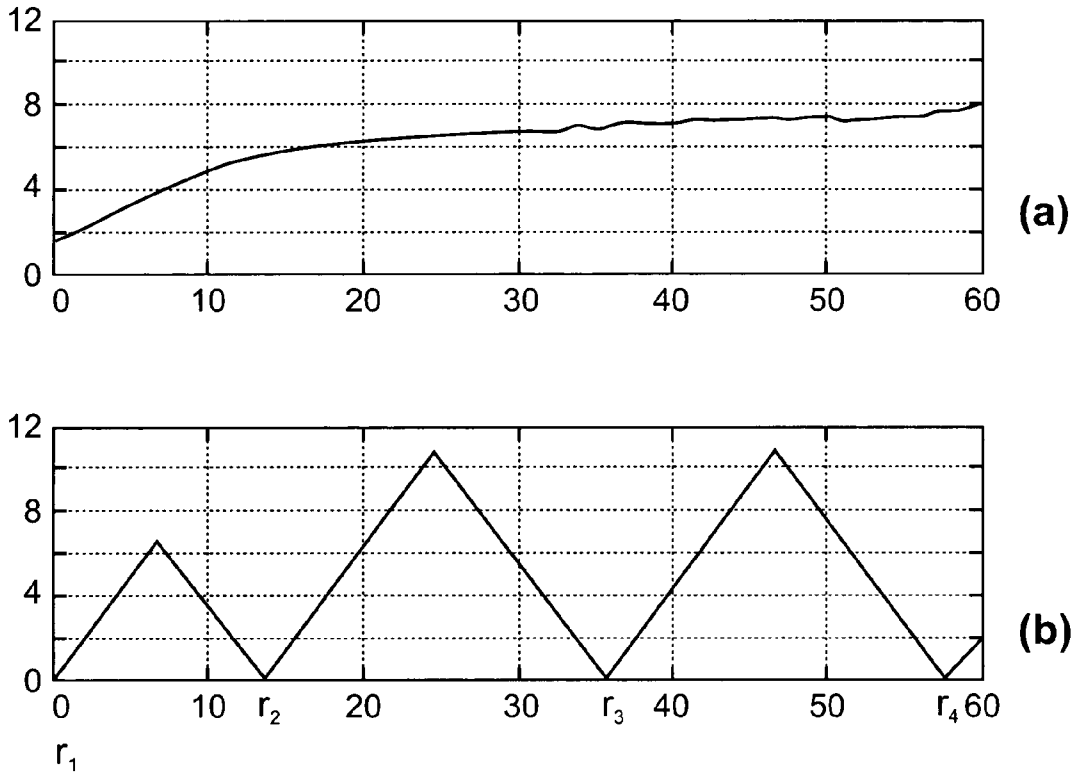

Fig.6

ADAPTIVE CODING OF A PREDICTION ERROR IN HYBRID VIDEO CODING

[0001] The invention relates to a method of coding and decoding, a coder and a decoder, and data signals using adaptive coding of the prediction error.

[0002] Up to date standardized video coding methods are based on hybrid coding. Hybrid coding provides a coding step in the time domain and a coding step in the spatial domain. First, the temporal redundancy of video signals is reduced by using a block based motion compensated prediction between the image block to be coded and a reference block from an image that has already been transmitted determined by a motion vector. The remaining prediction error samples are arranged in blocks and are transformed into the frequency domain resulting in a block of coefficients. These coefficients are quantised and scanned according to a fixed and well-known zigzag scanning scheme, which starts with the coefficient representing the DC value. According to a typical representation, this coefficient is positioned among the low frequency coefficients in the top left corner of a block. The zigzag scanning produces a one-dimensional array of coefficients, which are entropy-coded by a subsequent coder. The coder is optimised for an array of coefficients with decreasing energy. Since the order of coefficients within a block is predetermined and fixed, the zigzag scanning produces an array of coefficients of decreasing energy, if the prediction error samples are correlated. The subsequent coding step may then be optimised for such a situation. For this purpose, the latest standard H.264/AVC proposes Context-Based Adaptive Binary Arithmetic Coding (CABAC) or Context-Adaptive Variable-Length Coding (CAVLC). However, the coding efficiency of the transform only is high, if the prediction error samples are correlated. For samples being only marginally correlated in the spatial domain, the transform is less efficient.

[0003] It is an object of the present invention to provide a coding and decoding method, respective coders and decoders, data signals as well as corresponding systems and semantics for coding and decoding video signals being more efficient than the prior art.

[0004] According to an aspect of the present invention, a method for coding a video signal is provided being based on hybrid coding. The method comprises the steps of reducing temporal redundancy by block based motion compensated prediction in order to establish a prediction error signal, and deciding whether to transform the prediction error signal into the frequency domain, or to maintain the prediction error signal in the spatial domain.

[0005] According to a corresponding aspect of the present invention, a coder is provided, which is adapted to apply hybrid coding of a video signal. The coder includes means for reducing the temporal redundancy by block based motion compensated prediction in order to establish a prediction error signal, and means for deciding whether to transform the prediction error signal into the frequency domain, or to maintain the prediction error signal in the spatial domain. According to this aspect of the invention, a concept and corresponding apparatuses, signals and semantics are provided to decide adaptively whether to process the prediction error signal in the frequency or in the spatial domain. If the prediction error samples have only small correlation, the subsequent steps of coding the samples may be more efficient and they would lead to a reduced data rate compared to coding the coefficients in the frequency domain. Therefore, an adaptive deciding step and adaptive control means to make the decision are implemented by the present invention. Accordingly, in view of the prediction error signal, it is decided whether to use frequency domain transform or to maintain the prediction error signal in the spatial domain. The subsequent coding mechanisms may be the same as for the frequency domain, or they may be adapted especially to the needs of the samples in the spatial domain.

[0006] According to another aspect of the invention, the method for coding a video signal, and in particular the deciding step is based on a cost function. Generally, the decision whether to use the coefficients in the frequency domain or the samples in the spatial domain may be based on various kinds of deciding mechanisms. The decision may be made for all samples within a specific portion of a video signal at once, or e.g. even for a specific number of blocks, macroblocks, or slices. The decision may be based on a cost function, as for example a Lagrange function. The costs are calculated for both, coding in the frequency domain and coding in the spatial domain. The decision is made for the coding with lower costs.

[0007] According to another aspect of the present invention, the cost function includes the rate distortion costs for the coding in the spatial and in the frequency domain. According to still another aspect of the invention, the rate distortion costs may be calculated by the required rate and the resulting distortion weighted by a Lagrange parameter. Further, the distortion measure may be the mean square quantisation error or the mean absolute quantisation error.

[0008] According to an aspect of the present invention, the samples in the spatial domain may be coded by essentially the same methods as being used for the coefficients in the frequency domain. These methods may include the CABAC or CAVLC coding methods. Accordingly, only little or no adaption of the coding mechanisms is necessary, if the adaptive control means decide to switch between the frequency and the spatial domain. However, it might also be provided to use different coding schemes for the coefficients in the two domains.

[0009] According to another aspect of the invention, a method for coding a video signal is provided, which is based on hybrid coding. According to this aspect of the invention, the temporal redundancy is reduced by block based motion compensated prediction, and the samples of the prediction error signal are provided in the prediction error block in the spatial domain. The samples are scanned from the prediction error block in order to provide an array of samples in a specific order. According to this aspect of the invention it is provided that the scanning scheme is derived from a prediction error image or a prediction image. The scanning scheme according to this aspect of the invention takes account of the effect that the zigzag scan according to prior art for the frequency domain may not be the most efficient scanning order for the spatial domain. Therefore, an adaptive scanning scheme is provided, which takes account of the distribution of the samples and the magnitude of the samples in the spatial domain. The scanning scheme may preferably be based on a prediction error image or a prediction image. This aspect of the invention takes account of the most probable positions of the samples having the highest magnitude and samples being most probably zero. As the coding gain for the frequency domain is mainly based on the phenomenon that the low frequency components have larger magnitudes, and most of

the high frequency coefficients are zero, a very effective, variable code length coding scheme like CABAC or CAVLC may be applied. However, in the spatial domain, the samples having the highest magnitude may be located anywhere within a block. However, as the prediction error is usually the highest at the edges of a moving object, the prediction image or the prediction error image may be used to establish the most efficient scanning order.

[0010] According to an aspect of the present invention, the gradients of the prediction image may be used to identify the samples with large magnitudes. The scanning order follows the gradients within the prediction image in their order of magnitude. The same scanning order is then applied to the prediction error image, i.e. the samples in the prediction error image in the spatial domain.

[0011] Further, according to still another aspect of the present invention, the scanning scheme may be based on a motion vector in combination with the prediction error image of the reference block. The scan follows the magnitudes of the prediction error in decreasing order.

[0012] According to one aspect of the invention, the scanning scheme is derived from a linearcombination of the gradient of the prediction image and the prediction error image of the reference block in combination with a motion vector

[0013] According to another aspect of the present invention, a specific code for the coding mechanisms, as for example CABAC or the like is used based on separately determined probabilities for the coefficients in the frequency domain or the samples in the spatial domain. Accordingly, the well-known prior art coding mechanisms may be adapted at least slightly in order to provide the most efficient coding mechanism for the spatial domain. Accordingly, the switching mechanism being adaptively controlled in order to code either in the spatial or in the frequency domain may be further adapted to switch the subsequent coding steps for the samples or coefficients in the respective domains.

[0014] According to an aspect of the present invention, a method for coding a video signal is provided including a step of quantising the prediction error samples in the spatial domain by a quantiser, which has either subjectively weighted quantitation error optimisation or mean squared quantization error optimization. According to this aspect of the invention, the quantiser used for quantising the samples in the spatial domain may be adapted to take account of the subjectively optimal visual impression of a picture. The representative levels and decision thresholds of a quantiser may then be adapted based on corresponding subjective or statistical properties of the prediction error signal.

[0015] Further, the present invention relates also to a decoding method and a decoding apparatus in accordance with the aspects set out here above. According to an aspect of the present invention, a decoder is provided including adaptive control means for adaptively deciding whether an input stream of a coded video signal represents the prediction error signal of the coded video signal in the spatial domain or in the frequency domain. Accordingly, the decoder according to this aspect of the present invention is adapted to decide for an incoming data stream, i.e. whether the prediction error signal is coded in the frequency or in the spatial domain. Further, the decoder provides respective decoding means for each of the two domains, either the spatial or the frequency domain.

[0016] Further, according to still another aspect of the present invention, the decoder comprises a scan control unit for providing a scanning order based on a prediction signal or a prediction error signal. The scan control unit according to this aspect of the invention is adapted to retrieve the necessary information about the scanning order, in which the incoming samples of a block have been scanned during coding the video signals. Further, the decoder may comprise all means in order to inverse quantise and inverse transform the coefficients in the frequency domain or to inverse quantise the samples in the spatial domain. The decoder may also include a mechanism to provide motion compensation and decoding. Basically, the decoder may be configured to provide all means in order to implement the method steps corresponding to the coding steps explained here above.

[0017] According to still another aspect of the present invention, a data signal representing a coded video signal is provided, wherein the coded information of the prediction error signal in the data signal is partially coded in the spatial domain and partially coded in the frequency domain. This aspect of the invention relates to the coded video signal, which is a result of the coding mechanisms as set out above.

[0018] Further, according to still another aspect of the invention, the data signal may include side information indicating the domain in which a slice, a macroblock, or a block is coded, in particular information whether a slice, a macroblock or a block is coded in the spatial or in the frequency domain. As the adaptive control according to the present invention provides that the prediction error signal is either coded in the spatial domain or in the frequency domain, it is necessary to include corresponding information into the coded video signal. Therefore, the present invention provides also a specific information, which indicates the domain in which the specific portion, such as a slice, macroblock, or block has been coded.

[0019] Further, this aspect of the invention takes also account of the possibility that a whole macroblock or a whole slice may be coded only in one of the two domains. So, if for example an entire macroblock is coded in the spatial domain, this may be indicated by a single flag or the like. Further, even a whole slice may be coded only in the frequency or in the spatial domain, and a corresponding indicator could be included for the whole slice into the data stream. This results in a decreased data rate and a more efficient coding mechanism for the side information.

[0020] The aspects of the present invention are explained with respect to the preferred embodiments which are elucidated by reference to the accompanying drawings.

[0021] FIG. **1** shows a simplified block diagram of an encoder implementing aspects according to the present invention,

[0022] FIG. **2** shows a simplified block diagram of a decoder implementing aspects of the present invention,

[0023] FIG. **3** shows a scanning scheme according to the prior art,

[0024] FIG. **4** shows scanning schemes according to the present invention, and

[0025] FIG. **5** illustrates the parameters used for an optimised quantiser according to the present invention.

[0026] FIG. **1** shows a simplified block diagram of an encoder according to the present invention. Accordingly, the input signal **101** undergoes a motion estimation based on which a motion compensation prediction is carried out in order to provide a prediction signal **104**, which is subtracted from the input signal **101**. The resulting prediction error signal **105** is transformed into the frequency domain **106** and quantised by an optimised quantiser **107** for the frequency

related coefficients. The output signal **120** of the quantiser **107** is passed to an entropy coder **113** which provides the output signal **116** to be transmitted, stored, or the like. By means of an inverse quantisation block **110** and inverse transformation block **111**, the quantised prediction error signal **120** is further used for the next prediction step in the motion compensated prediction block **103**. The inverse quantised an inverse DCT transformed prediction error signal is added to the prediction signal and passed to frame memory **122** storing preceding images for the motion compensation prediction block **103** and the motion estimation block **102**. Generally, the present invention suggests to use in addition to the prior art an adaptively controlled mechanism **115** to switch between the frequency and the spatial domain for transforming the prediction error signal **105**. The adaptive control means **115** produce signals and parameters in order to control the adaptive change between the frequency and the spatial domain. Accordingly, an adaptive control information signal **121** is asserted to the two switches switching between the positions A and B. If the transformation is carried out in the frequency domain, the two switches are in position A. If the spatial domain is used, the switches are switched to position B. Further, the side information signal **121**, i.e. which of the domains has been used for the coding procedure of a picture is also passed to the entropy coder **113**. Accordingly, an appropriate information for the device is included into the data stream. Parallel to the frequency transform, via an alternative path, the prediction error signal **105** is passed to the quantiser **109**. This quantisation block **109** provides optimised quantisation for the prediction error signal **105** in the spatial domain. The quantised prediction error signal **124** in the spatial domain may be passed to a second inverse quantisation block **112** and further to the back connection to the motion compensation prediction block **103**. Additionally, there is a scan control block **114** receiving either the motion vector **123** and the inverse quantised prediction error signal **118**, or the prediction signal **104** via connection **119**. Block **117** serves to encode the motion information.

[0027] The adaption control block **115** decides whether a block is to be coded in the frequency or in the spatial domain, and it generates corresponding side information to indicate the domain. The decision made by the adaption control means is based on the rate distortion costs for the coding in the spatial and for coding in the frequency domain. The domain having the lower rate distortion costs is selected for coding. For example, the rate distortion costs C are calculated by the required rate R and the resulting distortion D weighted by a Lagrange parameter L: $C=L*R+D$. As a distortion measure, the mean squared quantisation error may be used, but also other measures are applicable, as for example the mean absolute quantisation error. As Lagrange parameter L, the commonly used Lagrange parameter for the coder control of H.264/AVC may be used $L=0.85*2^{((QP-12)/3)}$. Alternative methods for determining the rate distortion costs are possible.

[0028] The adaption control **115** can alternatively control the coding method. This may be done for example based on the prediction signal or based on the correlation in the prediction error, or based on the domain, the prediction error is coded in at a motion compensated position of already transmitted frames.

[0029] FIG. **2** shows a simplified block diagram of an architecture of a decoder according to aspects of the present invention. Accordingly, the coded video data is input to two entropy decoding blocks **201** and **202**. The entropy decoding block **202** decodes motion compensation information, such as motion vectors etc. The entropy decoding block **201** applies the inverse coding mechanism used in the coder, as for example decoding according to CABAC or CAVLC. If the encoder uses a different coding mechanism for the coefficients or the samples in the spatial domain, the corresponding decoding mechanism is to be used in the corresponding entropy decoding blocks. Accordingly, the entropy decoding block **201** produces the appropriate signals in order to switch between positions A and B in order to use either the appropriate inverse quantisation path for the spatial domain, i.e. the inverse quantisation operation block **206**, or the appropriate blocks according to switch position A, i.e. the inverse quantisation block **203** and the inverse transform block **204**. If the prediction error is represented in the frequency domain, inverse quantisation block **203** and inverse transformation block **204** apply the corresponding inverse operations. As the samples in the spatial domain have been arranged in a specific order in accordance with a scan mechanism according to aspects of the present invention, a scan control unit **205** provides the correct order of the samples for the entropy decoding block **201**. If the encoding has been carried out in the spatial domain, the inverse transform block **204** and the inverse quantization block **203** are bypassed by an inverse quantisation operation in block **206**. The switching mechanism, to switch between frequency and spatial domain (i.e. position A and B of the switches) is controlled by the side information sent in the bitstream and decoded by the entropy decoding block **201**. Further, the inverse quantised signal in the spatial domain, or the inverse quantized and inverse transformed signal in the frequency domain are summed with the motion compensated prediction picture in order to provide the decoded video signals **210**. The motion compensation is carried out in block **209** based on previously decoded video signal data (previous pictures) and motion vectors. The scan control unit **205** uses either the prediction image **208**, or the prediction error signal **207** in combination with the motion vector **212** to determine the correct scan sequence of the coefficients. The scan mechanism may also be based on both pictures, i.e. the prediction error picture and the prediction picture. As explained for the coding mechanism with respect to FIG. **1**, the scan sequence during coding may be based on a combination of the prediction error information **207** and the motion compensation vectors. Accordingly, the motion compensation vectors may be passed via a path **212** to the scan control unit **205**. Further, in correspondence to FIG. **1**, there is a frame memory **211** storing the necessary and previously decoded pictures.

[0030] FIG. **3** shows a simplified diagram in order to illustrate the zigzag scan order according to the prior art. Accordingly, the coefficients, which are the result of a transform to the frequency domain (for example DCT) are arranged in a predetermined order as shown in FIG. **3** for a four by four block. These coefficients are read out in a specific order, such that the coefficients representing the low frequency portions are located in the first left positions of a one-dimensional array. The more on the bottom right of the array, the higher the corresponding frequencies of the coefficients. As blocks to be coded often contain substantial low frequency coefficients, the high frequency coefficients, or at least a majority of high frequency coefficients are zero. This situation can effectively be used to reduce the data to transmit it by for example replacing large sequence of zeros by a single information about the number of zeros.

[0031] FIG. **4** shows a simplified illustrative example for a scan mechanism according to an aspect of the present invention. FIG. **4**(*a*) shows the magnitude of the gradients in the prediction image for one block. The values in each position of the block represent the gradient of the prediction image of the current block. The gradient itself is a vector consisting of a two components representing the gradient in horizontal and vertical direction. Each component may be determined by the difference of the two neighboring samples or it may be determined by the well-known Sobel-operator taking six neighboring samples into account. The magnitude of the gradient is the magnitude of the vector. If two values have the same magnitude, a fixed or predetermined scan order may be applied. The scanning order follows the magnitude of the gradient values in the block as indicated by the dotted line. Once the scanning order within the gradient prediction image is established, the same scanning order is applied to the quantised prediction error samples, which are shown in FIG. **4**(*b*). If the quantised samples in the spatial domain of the block shown in FIG. **4**(*b*) are arranged in a one-dimensional array as indicated on the left side of FIG. **4**(*b*) in accordance with the scanning order established based on the magnitude of the gradients in the prediction image, the samples having a high value are typically arranged first in the array, i.e. in the left positions. The right positions are filled with zeros as indicated in FIG. **4**(*b*).

[0032] Instead of a scan controlled by the gradient, also other scans as e.g. a predefined scan or a scan controlled by the quantised prediction error of already transmitted frames in combination with a motion vector, or combinations thereof can be applied (the scan control relates to blocks **114** or **205** as explained with respect to FIG. **1** and FIG. **2**). In the case of a scan controlled by the prediction error signal in combination with a motion vector, the scan follows the magnitudes of the quantized prediction error samples of the block, the motion vector of the current block refers to, in decreasing order.

[0033] If the motion vector points to fractional sample positions, the required quantized prediction error samples may be determined using an interpolation technique. This may be the same interpolation technique as used for the interpolation of the reference image in order to generate the prediction samples.

[0034] In the case the scan is controlled by the combination of the prediction image and the prediction error image in combination with a motion vector, linear combinations of the magnitudes of the gradients and of the quantized prediction error samples of the block, the motion vector of the current block refers to, are calculated. The scan follows the values of these linear combinations. In addition, the method for the scan determination can be signalled for segments of the sequence, e.g. for each frame or for each slice or for a group of blocks. According to the typical standard processing, the motion compensation vectors are already considered, while the prediction image is determined.

[0035] According to another aspect of the present invention, the scanning order may also be based on the prediction error picture in combination with a motion vector. Further, combinations of the gradient principle as explained above and the prediction error picture are conceivable.

[0036] FIG. **5** shows a simplified illustration being useful to illustrate the definition of an optimised quantiser according to aspects of the present invention. Accordingly, the three parameters a, b, and c are the parameters used to adapt the quantiser. According to the standard H.264/AVC, rate distortion optimised quantisers for the coefficients with two different distortion measures are applied. The first measure is the mean squared quantisation error, the second is the subjectively weighted quantisation error. According to the H.264/AVC standard, two quantisers for the prediction error samples are developed. Since the distribution of the prediction error is close to a Laplacian distribution, scalar a dead-zone plus uniform threshold quantiser is used in the case of mean squared quantisation error optimisation. FIG. **5** illustrates the parameters a, b, and c of the quantisation and inverse quantisation.

[0037] Table 1 shows the parameters a, b, and c, which may be advantageously used for the commonly used QPs (Quantisation Parameter) in the H.264/AVC coding scheme. The parameters a, b, c are the respective optimised parameters for mean square quantisation error optimisation. However, this is only an example, and different or additional parameters may be useful for different applications.

TABLE 1

	Mean squared quantisation error optimisation			Subjectively weighted quantisation error optimisation				
QP	a	b	c	r_1	r_2	r_3	r_4	r_5
23	9.6	1.6	2.7	0	11	28	46	66
26	14.8	1.4	4.8	0	14	36	58	110
29	22.2	1.4	6.9	0	20	54	92	148
32	30.2	1.4	9.3	0	28	76	130	220

[0038] For subjectively weighted quantisation error optimisation, a non-uniform quantiser is proposed with representative levels r_i, $-r_i$ and decision thresholds in the middle of adjacent r_i, which are also shown in table 1. If large prediction errors occur at the edges, visual masking may be exploited. Accordingly, large quantisation errors may be allowed at the edges and small ones if the image signal is flat. H.264/AVC may use more than 4 QPs as shown in Table 1. Then Table 1 has to be extended. H.264/AVC may use 52 different QPs. The basic idea for determining the appropriate representative values r_i, $-r_i$, is explained here below with respect to FIG. **6**.

[0039] FIG. **6** shows a simplified representation of the measured mean absolute reconstruction error of a picture element in the case of the subjectively weighted quantisation in the frequency domain in FIG. **6**(*a*) and in the spatial domain in FIG. **6**(*b*). The measured mean absolute reconstruction error of subjectively weighted quantisation in the frequency domain is shown as a function of the absolute value of the prediction error. For the absolute reconstruction error of subjectively weighted quantisation in the spatial domain, the representation levels r_i, are adjusted such that the mean absolute reconstruction error is the same for quantisation in the frequency and spatial domain with respect to the quantisation intervals in the spatial domain. Just as an example, the values r_1, r_2, r_3, and r_4 for QP=26 as indicated in table 1 are also present in FIG. **6**(*b*). As a rule of thumb, a representative levels r_i is approximately doubled if the value QP increases by 6. The quantiser design can also exploit other features of the visual system. Furthermore, quantisers can be used to create a quantisation error with properties different to those of the H.264/AVC quantisers.

Entropy Coding of the Quantised Samples in the Spatial Domain

[0040] According to an aspect of the present invention, entropy coding in the spatial domain may be based on the

same methods as for the quantised coefficients in the frequency domain. For the H.264/AVC standard, two preferred entropy coding methods are CABAC and CAVLC. However, according to this aspect of the present invention, instead of coding the quantised coefficients in the frequency domain, quantised samples in the spatial domain are coded by the above mentioned methods. As explained above, the scanning order may be changed in order to provide the same data reduction as for the frequency domain. As set out above, the scan in the spatial domain may be controlled by the magnitude of the gradient of the prediction image signal at the same spatial position. According to this principle, the samples to be coded are arranged in an order of decrease in gradients, as already explained with respect to FIG. **4**(*a*) and (*b*). Other scan mechanisms may also be applied as set out above. Further, separate codes, which means separate probability models in the case of CABAC, may be used for the spatial domain according to aspects of the present invention. The code and in the case of CABAC the initialisation of the probability models may be derived from the statistics of the quantised samples. The context modelling in the spatial domain may be done in the same way as in the frequency domain.

Coding of the Side Information

[0041] The adaptive control means explained with respect to FIG. **1** generates the information relating to the domain, in which a block is to be coded. The block size may be four by four or eight by eight picture elements according to the size of the transform. However, according to different aspects of the present invention, other block sizes independent of the size of the transform may be applied. According to an aspect of the present invention, the side information includes specific flags, which indicate whether the coding mechanism has adaptively been changed during coding. If for example all blocks of a slice are coded in the frequency domain, this may be indicated by a specific bit in the coded video data signal. This aspect of the invention may also relate to the blocks of a macroblock, which may all be coded in each of the two domains, or only in one domain. Further, the concept according to the present aspect of the invention may be applied to macroblocks and information may be included in the data stream which indicates whether at least one block of a macroblock is coded in the spatial domain. Accordingly, the flag Slice_FD_SD_coding_flag may be used to indicate whether all blocks of the current slice are coded in the frequency domain, or whether at least one block is coded in the spatial domain. This flag may be coded by a single bit. If at least one block of the slice is coded in the spatial domain, this may be indicated by the flag MB_FD_SD_coding_flag for each individual macroblock of the current slice, if all the blocks of the current macroblock are coded in the frequency domain, or if at least one block is coded in the spatial domain. This flag may be coded conditioned on the flags of the already coded neighbouring blocks to the top and to the left. If the last one of a macroblock is coded in the spatial domain, this may be indicated by the flag FD_or_SD-Flag for each block of the macroblock to be coded, if the current block is coded in the frequency or in the spatial domain. This flag may be coded conditioned on the flags of the already coded neighbouring blocks to the top and to the left. Alternatively, the side information may also be coded conditioned by the prediction signal or the prediction error signal in combination with a motion vector.

Syntax and Semantics

[0042] According to this aspect of the present invention, an exemplary syntax and semantics allowing the incorporation of the aspects of the present invention into the H.264/AVC coding scheme is presented. Accordingly, the flag Slice_FD_SD_coding_flag may be introduced in the slice_header as shown in table 2. The flag MB_FD_SD_coding_flag may be sent in each macroblock_layer as shown in table 3. In the residual_block_cabac it may be signalled by the flag FD_or_SD_flag if the frequency domain coding or spatial domain coding is supplied for the current block, this is shown in table 4 here below. A similar scheme may be applied in other video coding algorithms for the prediction error coding.

TABLE 2

slice_header( ){	C	Descriptor
.		
.		
.		
Slice_FD_SD_coding_flag	2	u(1)
.		
.		
.		

TABLE 3

Macroblock_layer( ){	C	Descriptor
.		
.		
.		
If (Slice_FD_SD_coding_flag == 1){		
MD_FD_SD_coding_flag	2	u(1), ae(v)
{		
.		
.		
.		

TABLE 4

residual_block_cabac{	C	Descriptor
.		
.		
.		
If (Slice_FD_SD_coding_flag == 1 && MB_FD_SD_Coding_flag == 1){		
FD_or_SD_flag	3/4	u(1), ae(v)
If (FD_or_SD_flag == 1)}		
Code_Prediction_error_in_spatial_domain		
}		
else{		
Code_Prediction_error_in_frequency_domain		
}		
}		
.		
.		
.		

1-22. (canceled)

23. A Method for coding a video signal using hybrid coding, comprising:

reducing temporal redundancy by block based motion compensated prediction in order to establish a prediction error signal,

deciding whether to transform the prediction error signal into the frequency domain, or to maintain the prediction error signal in the spatial domain for encoding.

24. The method according to claim **23**, wherein the step of deciding is based on a cost function.

25. The method according to claim **23**, wherein the cost function includes the rate distortion costs for the coding in the spatial and the coding in the frequency domain.

26. The method according to claim **25**, wherein the rate distortion costs are calculated by the required rate (R) and the resulting distortion (D) weighted by a Lagrange parameter.

27. The method according to claim **26**, wherein the distortion measure is the mean square quantization error or the mean absolute quantization error.

28. The method according to claim **23**, wherein the samples in the spatial domain are coded by the same method as the coefficients in the frequency domain.

29. The method of claim **28**, wherein the coding of the coefficients is carried out according to CABAC or CAVLC.

30. The method for coding a video signal using a hybrid coding, wherein the temporal redundancy is reduced by block based motion compensation prediction, the method comprising:

providing the samples of the prediction error signal in a prediction error block in the spatial domain,

scanning the samples in the prediction error block to provide an array of samples in a specific order, wherein the scanning scheme is derived from a prediction error image or a prediction image.

31. The method of claim **30**, wherein the scanning scheme is derived from the gradient of the prediction image, and/or

wherein the scanning scheme is based on a motion vector in combination with the prediction error image of the reference block, and/or

wherein the scanning scheme is derived from a linear combination of the gradient of the prediction image and the prediction error image of the reference block in combination with a motion vector.

32. The method according to claim **29**, wherein a specific code for CABAC is used having separate probabilities for the spatial domain, and/or

wherein a specific code for CAVLC is used for the spatial domain.

33. The method of claim **23** or **30**, comprising further quantizing the prediction error samples by a quantizer having subjectively weighted quantization error optimization or mean squared quantization error optimization in the spatial domain.

34. A Data signal representing a coded video signal, comprising coded information of a prediction error signal being partially coded in the spatial domain and partially coded in the frequency domain.

35. The data signal according to claim **34**, comprising information relating to the domain in which a slice, a macroblock, or a block is coded, in particular information whether a slice, macroblock, or block is coded in the spatial or in the frequency domain.

36. The data signal of claim **35**, comprising a slice_fd_sd_coding_flag, a mb_fd_sd_coding_flag, and/or a fd_or_sd_flag information relating to the coding used for a slice, a macroblock, or a block, respectively.

37. A Method for decoding a video signal using hybrid coding, comprising: decoding coded video data effectively in the frequency or the spatial domain, in accordance with the coding mechanism used for coding the video signal data.

38. The decoding method of claim **37**, wherein the positions of the prediction error signal samples received in a one-dimensional array are assigned to locations in a two-dimensional arrangement are determined based on a previously received prediction error signal or prediction image.

39. A Coder for coding a video signal using hybrid coding, comprising:

means for reducing the temporal redundancy by block based motion compensated prediction in order to establish a prediction error signal, and

adaptive control means for deciding whether to transform the prediction error signal into the frequency domain, or to maintain the prediction error signal in the spatial domain.

40. A Decoder for decoding a video signal being coded by use of hybrid coding, comprising adaptive control means (**201**) for adaptively deciding whether an input stream of a coded video signal represents the prediction error signal of the coded video signal in the spatial domain or in the frequency domain.

41. The decoder of claim **40** comprising further scanning control means for providing a scanning order based on a prediction signal or a prediction error signal or on a linear combination of both.

* * * * *