United States Patent [19]

Koga

[11] **Patent Number: 4,723,161**

[45] **Date of Patent: Feb. 2, 1988**

[54] **METHOD AND ARRANGEMENT OF CODING DIGITAL IMAGE SIGNALS UTILIZING INTERFRAME CORRELATION**

[75] Inventor: **Toshio Koga**, Tokyo, Japan

[73] Assignee: **NEC Corporation**, Japan

[21] Appl. No.: **841,175**

[22] Filed: **Mar. 19, 1986**

[30] **Foreign Application Priority Data**

Mar. 20, 1985 [JP] Japan 60-57336
Mar. 20, 1985 [JP] Japan 60-57338

[51] **Int. Cl.**[4] **H04N 7/12**
[52] **U.S. Cl.** **358/136**; 358/135
[58] **Field of Search** 358/136, 125, 135, 133

[56] **References Cited**

U.S. PATENT DOCUMENTS

4,077,053 2/1978 Ishiguro 358/136
4,591,909 5/1986 Kuroda et al. 358/136

OTHER PUBLICATIONS

"Some Experiments in Adaptive and Predictive Halamard Transform Coding of Pictures", Netravali et al.; Bell Technical Journal vol. 56, #8, Oct. 1977, pp. 1531-1547.

Primary Examiner—James J. Groody
Assistant Examiner—Victor R. Kostak
Attorney, Agent, or Firm—Ostrolenk, Faber, Gerb & Soffen

[57] **ABSTRACT**

In order to encode image signals using interframe correlation while maintaining high data compression as well as high resulting images, a motion compensated interframe prediction error is orthogonally transformed and then is subject to quantization. Thereafter, the quantized error signal undergoes inverse orthogonal transformation. In order to compensate for distortions caused by the quantization, a difference between the inversely orthogonally transformationed error signal and the original prediction error signal is quantized. By selecting the quantization characteristics, the influence or contribution of the orthogonal transformation can be controlled continuously.

4 Claims, 6 Drawing Figures

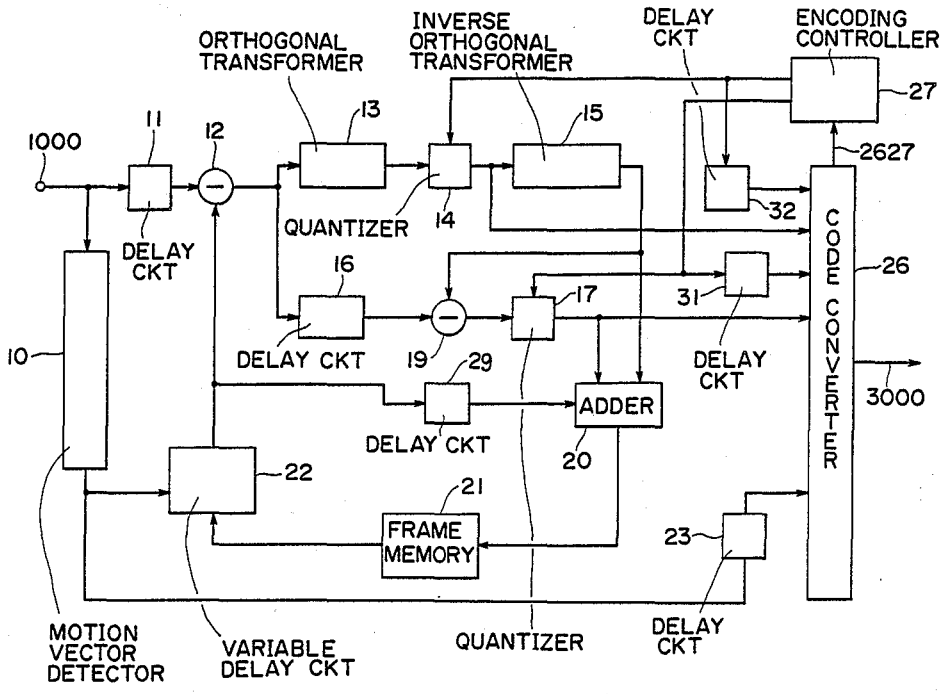

Amazon.com, Inc., Amazon.com Services LLC - Ex. 1004, Page 000001
IPR2024-00921 (Amazon.com, Inc., Amazon.com Services LLC v. Nokia Technologies Oy)

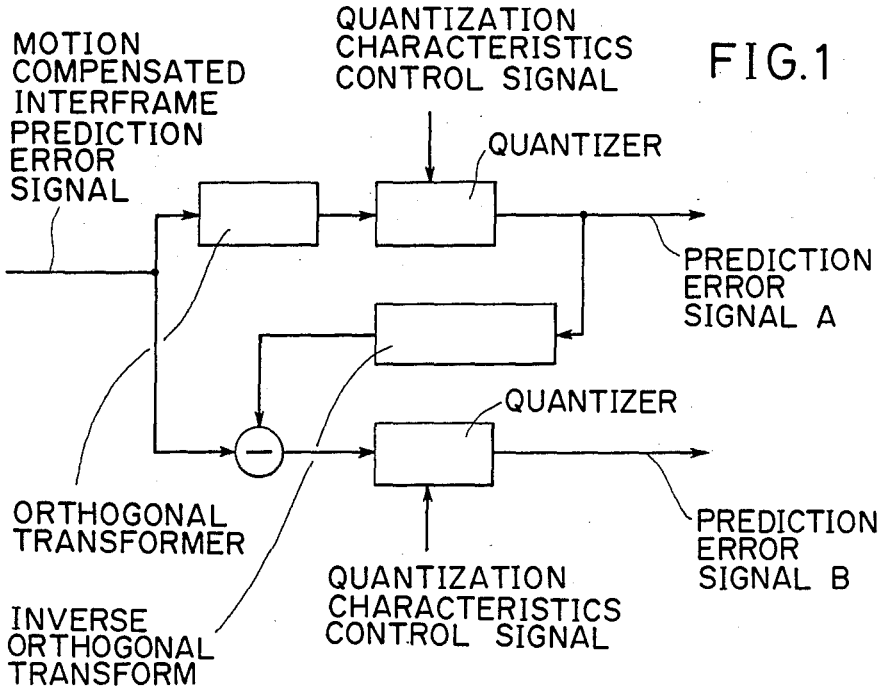
MOTION COMPENSATED INTERFRAME PREDICTION ERROR SIGNAL
QUANTIZATION CHARACTERISTICS CONTROL SIGNAL
QUANTIZER
PREDICTION ERROR SIGNAL A
QUANTIZER
ORTHOGONAL TRANSFORMER
INVERSE ORTHOGONAL TRANSFORM
QUANTIZATION CHARACTERISTICS CONTROL SIGNAL
PREDICTION ERROR SIGNAL B

FIG.1

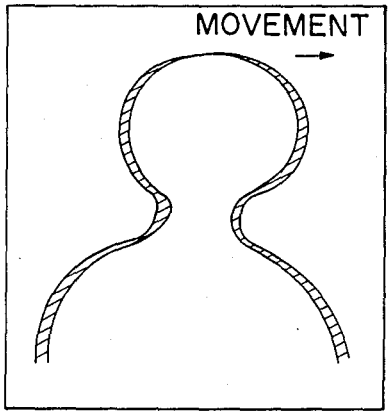
MOVEMENT

FIG.2

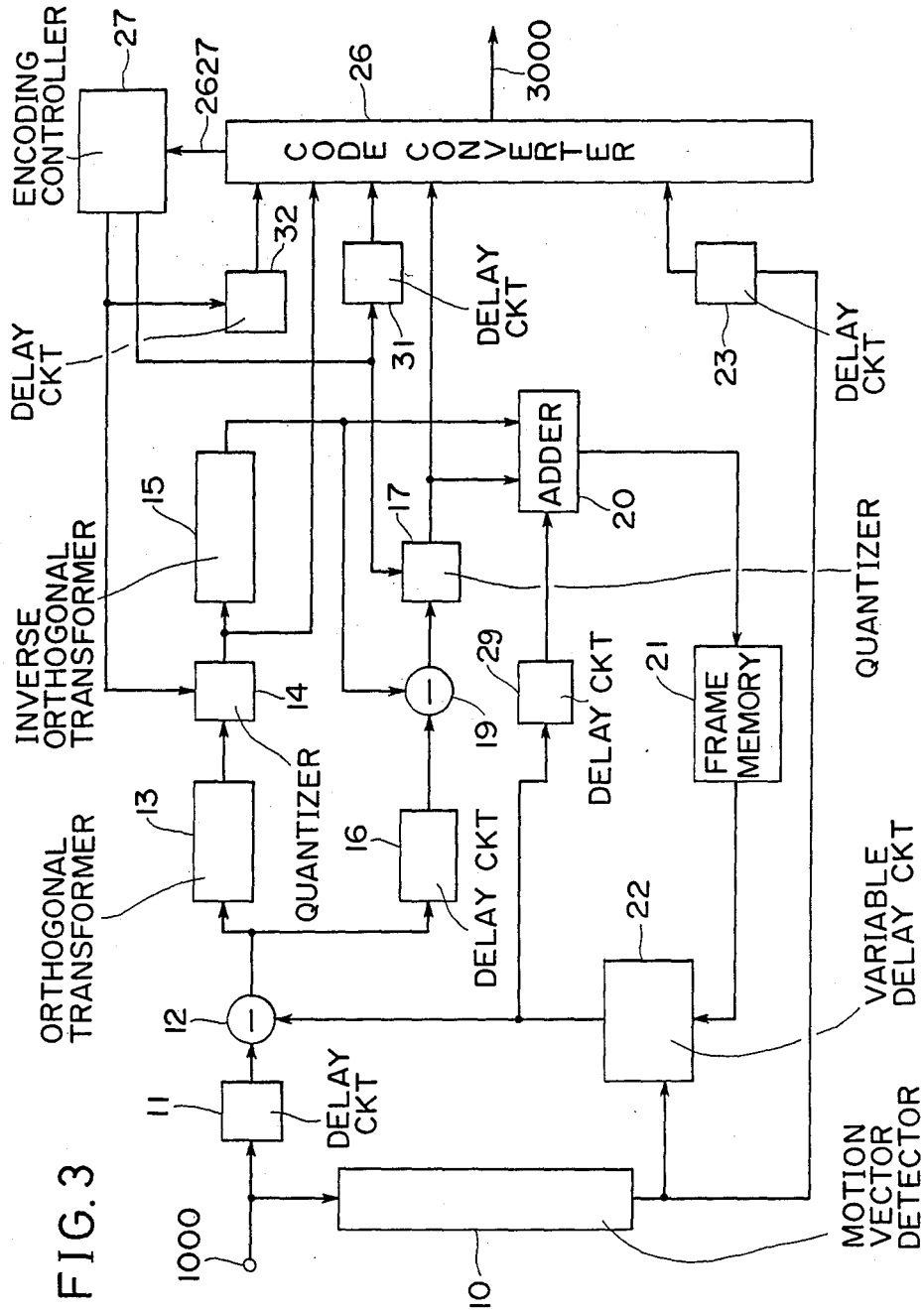
ENCODING CONTROLLER
27
2627
26
3000
CODE CONVERTER
32
DELAY CKT
31
DELAY CKT
23
DELAY CKT
15
INVERSE ORTHOGONAL TRANSFORMER
14
QUANTIZER
17
ADDER
20
QUANTIZER
13
ORTHOGONAL TRANSFORMER
16
DELAY CKT
19
29
DELAY CKT
21
FRAME MEMORY
22
VARIABLE DELAY CKT
12
11
DELAY CKT
1000
10
MOTION VECTOR DETECTOR

FIG. 3

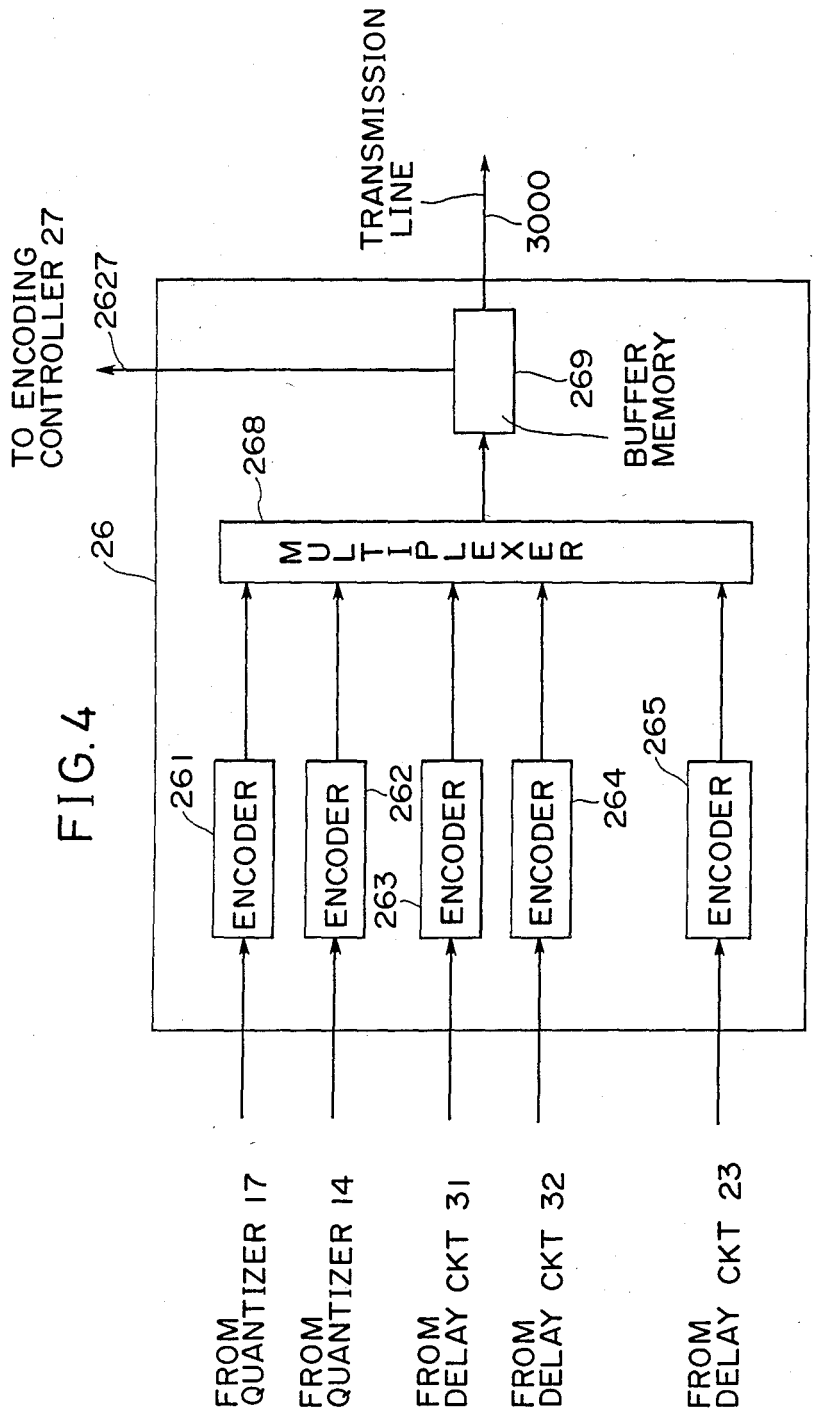
TRANSMISSION LINE
3000
TO ENCODING CONTROLLER 27
2627
269
BUFFER MEMORY
268
26
MULTIPLEXER
261
ENCODER
262
ENCODER
263
ENCODER
264
ENCODER
265
ENCODER
FROM QUANTIZER 17
FROM QUANTIZER 14
FROM DELAY CKT 31
FROM DELAY CKT 32
FROM DELAY CKT 23

FIG. 4

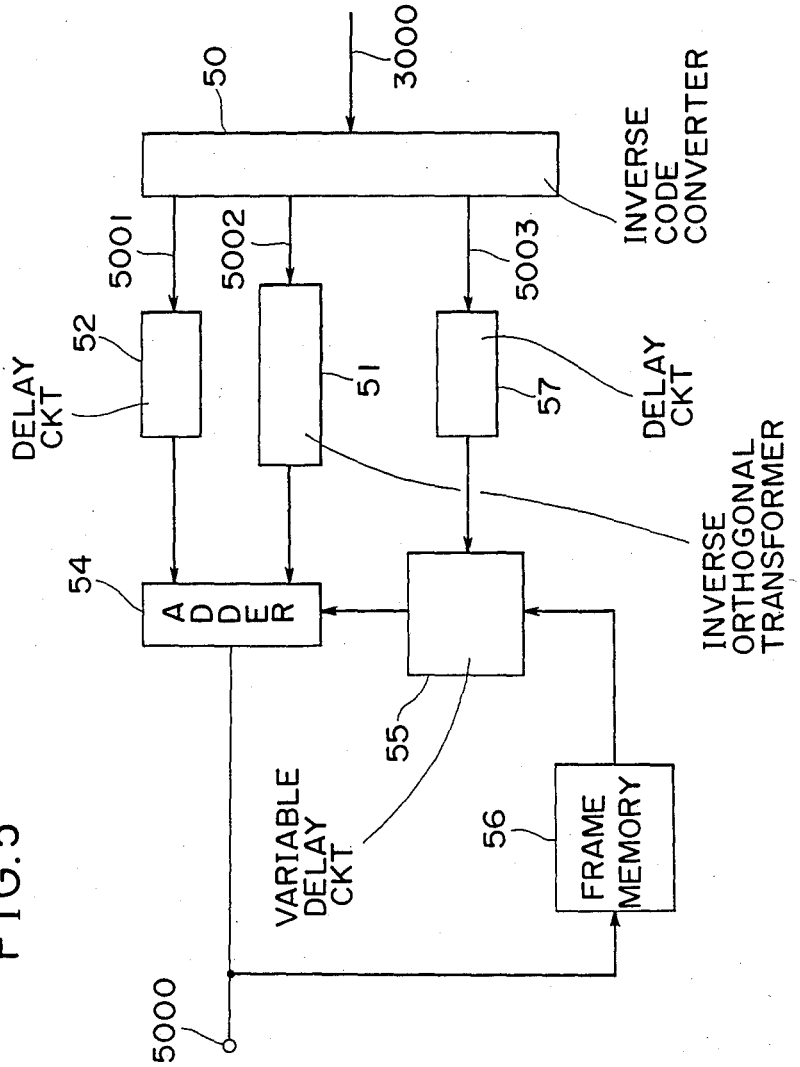
3000
50
INVERSE CODE CONVERTER
5001
5002
5003
52
DELAY CKT
51
57
DELAY CKT
INVERSE ORTHOGONAL TRANSFORMER
54
ADDER
55
VARIABLE DELAY CKT
56
FRAME MEMORY
5000

FIG. 5

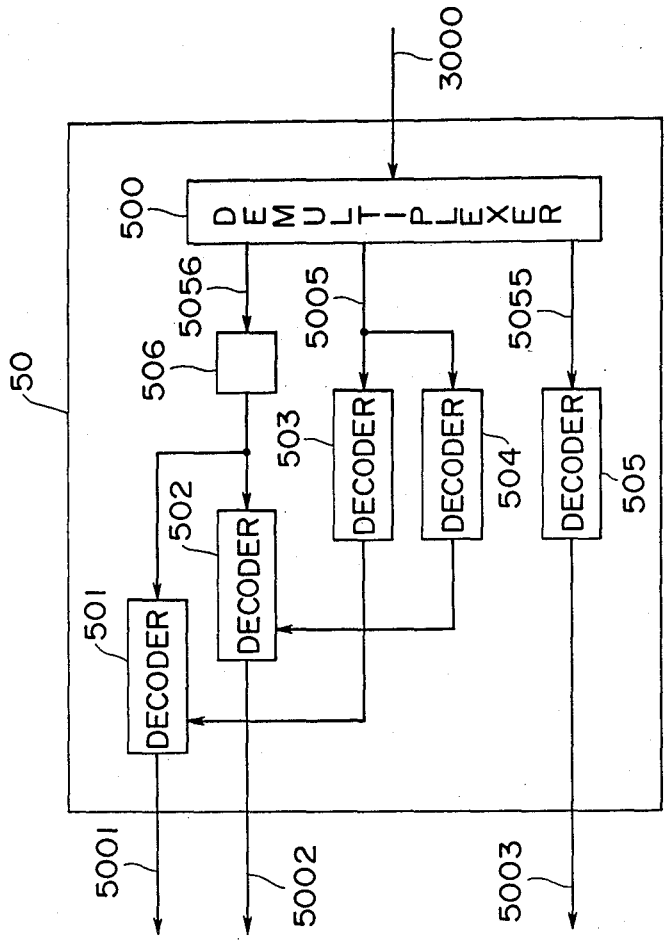
3000
500
DEMULTIPLEXER
5056
5005
5055
50
506
503
DECODER
DECODER
504
DECODER
505
502
DECODER
501
DECODER
5001
5002
5003

FIG. 6

METHOD AND ARRANGEMENT OF CODING DIGITAL IMAGE SIGNALS UTILIZING INTERFRAME CORRELATION

BACKGROUND OF THE INVENTION

1. Field of the Invention

This invention relates to a method and arrangement for prediction coding via correlation between consecutive frames of digital image signals for data compression or redundancy reduction of information to be transmitted, and more specifically to such a method and arrangement which feature high reproduction quality ranging from still pictures to very rapidly moving ones.

2. Description of the Prior Art

In order to compress digital images to be transmitted for the purposes of redundancy reduction, interframe prediction through correlation has been found effective. This prior art technique, when applied to still or relatively still images or pictures, is capable of realizing very high data compression as well as high reproduction quality.

The above-mentioned known technique, however, has encountered the problem that, when encoding images exhibiting rapid movement or displacement while maintaining high data compression, the reproduced pictures tend to degrade in quality. This is because the interframe correlation decreases with increase movement of an object between frames. A known approach to solving this problem is "motion compensation" technique, which utilizes intraframe movement or displacement (motion vector) to obtain high prediction probability. Motion compensation has found excellent applications in encoding image or picture signals of objects which are undergoing rapid movement, and hence high data compression as well as high fidelity of picture reproduction can be achieved. For further data relating to this motion compensation technique, reference should be had to an article entitled "Television Bandwidth Compression Transmission by Motion-Compensated Interframe Coding" (IEEE Communication Magazine, pp. 24–30, November 1982), and also to U.S. Pat. No. 4,077,053 issued on Feb. 28, 1978 in the name of Ishiguro.

The motion compensation, however, is not suitable in applying same to encoding signals of objects which are undergoing extremely rapid movement. More specifically, there exists the problem that the amount of encoded information becomes excessive due to inappropriate data compression and cannot be transmitted at the limited transmission rates available. In order to overcome the problem, viz., to reduce the information to be transmitted, the following approaches have been proposed: (a) changing the quantization characteristics from fine to coarse by increasing the quantization level, (b) reducing the number of pixels to be encoded (viz., subsampling), (c) reducing the number of fields to be encoded (viz., frame skipping), and (d) temporarily terminating the encoding itself. However, utilizing coarse quantization characteristics leads to impairment of reproduced pictures called "dirty window effect". That is, the reproduced pictures become dim as if viewed through a soiled window. On the other hand, the subsampling or frame skipping may cause temporary stoppage of reproduced pictures. This phenomenon tends to disturb the viewer rather than obscuring

the reproduced pictures due to lowering of spatial resolution.

In an effort to realize effective redundancy reduction in transmitting very rapid image signals, it has been proposed to apply orthogonal transformation to the prediction error signals derived from motion compensation. In connection with this prior art, reference should be had to "Displacement Measurement and Its Application in Interframe Image Coding" (IEEE Trans. Commun., Vol. COM-29 No. 12, pp. 1799–1808, December 1981). When applying this prior art to the case where encoded information is transmitted at a low transmission rate, most of the AC (alternate current) components of the orthogonal transformation coefficients should be neglected. In this case, it is usual to cut off or discard the coefficients corresponding to sophisticated patterns. Consequently, the reproduced complex pattern becomes somewhat dim. This however, causes no significant problem concerning visual sensation in that the viewer is not particularly sensitive to the obscurity of a very rapidly moving image.

It is understood that the orthogonal transformation contributes to effective data redundancy reduction if applied to encoding of pictures wherein the image is moving very rapidly. This stems from the fact that the correlation between consecutive frames is very high.

Contrarily, when encoding slow moving image information, the orthogonal transformation is no longer useful in that the interframe correlation is low. This can be illustrated by encoding the signals of slow or not extremely rapid moving images using the motion compensation, in the case of which the prediction errors occur isolately near the boundaries of a moving object. This means that the intraframe correlation of the prediction error signals is very low. As a result, if the orthogonal transformation is used in the above case, the reproduced picture quality is impaired to a considerable extent.

According to the prior art, however, there is no method or arrangement which enables the encoding of images ranging from still pictures to very rapidly moving pictures while maintaining high data compression as well as high reproduction quality.

SUMMARY OF THE INVENTION

Therefore, an object of this invention is to provide a method of encoding digitized images signals using correlation between consequtive frames for data compression or redundancy reduction.

Another object of this invention is to provide a method and arrangement for encoding digitized image signals via correlation between cosecutive frames, wherein resulting images or pictures of high quality can be obtained even though they contain from still to very rapidly moving content.

One aspect of this invention takes the form of a method of interframe prediction encoding an incoming image signal by correlating consecutive frames, comprising the steps: (a) producing an interframe prediction signal; (b) obtaining a prediction error signal by deriving a difference between the incoming image signal and the interframe prediction signal; (c) causing the prediction error signal to undergo orthogonal transformation on a block by block basis; (d) quantizing the resulting signal obtained at step (c) using a first quantization characteristics; (e) causing the quantized signal obtained at step (c) to undergo inverse orthogonal transformation; (f) deriving a difference between the prediction error signal and the signal resulting from the inverse

Amazon.com, Inc., Amazon.com Services LLC - Ex. 1004, Page 000007

orthogonal transformation; (g) quantizing the difference obtained at step (f) using a second quatization characteristics; and (h) code converting the results obtained at steps (d) and (g).

BRIEF DESCRIPTION OF THE DRAWINGS

The features and advantages of the present invention will become more clearly appreciated from the following description taken in conjunction with the accompanying drawings in which like blocks, circuits or circuit elements are denoted by like reference numerals and in which:

FIG. **1** is a block diagram showing the circuit arrangement which characterizes this invention;

FIG. **2** is a sketch illustrating prediction error zones which occur near the boundaries of a moving object image;

FIG. **3** shows in block diagram form an encoder according to this invention;

FIG. **4** is a block diagram showing in detail one block shown in FIG. **3**;

FIG. **5** shows in block diagram form a decoder according to this invention; and

FIG. **6** is a block diagram showing in detail one of the blocks shown in FIG. **5**.

DETAILED DESCRIPTION OF THE PREFERRED EMBODIMENTS

Before describing the preferred embodiments in detail, the principle underlying this invention will first be discussed with reference to FIGS. **1** and **2**.

This invention is found most effective when the motion compensation is concurrently applied, but is not restricted to such utilization.

FIG. **1** is a block diagram showing in simplified form the circuit arrangement which characterizes this invention, while FIG. **2** is a sketch of an image of a bust of a person (for example) which is moving horizontally. It is assumed that the moving speed is in a range during which the motion compensation is effectively carried out. FIG. **2** further illustrates, by hatching, prediction error zones which occur along or around the image boundary. In the case where such prediction errors undergo orthogonal transformation, most of resultant transformation coefficients assumes very small amplitudes. When these transformation coefficients undergo inverse orthogonal transformation, most of the resulting signals (viz., prediction errors) assume values close to zero.

In other words, the resulting or reproduced picture image includes distortions along the boundary. It follows therefore that the application of orthogonal transformation to such a case is liable to increase distortion of the resulting images, and hence should not be utilized. Contrarily, if the image to be encoded moves very rapidly, then the orthogonal transformation is useful for effective data compression as well as high quality of resulting images.

In order to take advantage of the merits of both methods, if the orthogonal transformation is selectively applied according to the displacement speed of an object image to be transmitted, then the picture image quality changes abruptly upon changing to a mode wherein orthogonal transformation is not used, and vice versa. As a consequence, this technique has not proven successful.

In order to overcome this problem, according to this invention, a motion compensated interframe prediction error is orthogonally transformed and then is subject to quantization. Thereafter, the quantized error signal undergoes inverse orthogonal transformation. In order to compensate for distortions caused by the quantization, a difference between the inversely orthogonally transformationed error signal and the original prediction error signal is quantized. By selecting the quantization characteristics, the influence or contribution of the orthogonal transformation can be controlled continuously.

More specifically, the orthogonal transformation is strongly suppressed as long as the motion compensation is effective. On the contrary, as the effect due to the motion compensation decreases, the orthogonal transformation is allowed to prevail. Thus, the distortions along the boundaries of resultant picture images due to the orthogonal transformation can be avoided. Further, the resulting picture images having intermediate range of moving speeds have picture quality which changes continuously or smoothly.

Whether or not the orthogonal transformation is utilized, is determined with ease by checking whether a detected motion vector exceeds a predetermined range of motion compensation. It should be noted that in a usual motion vector detection, the swift movement exceeding the motion compensating region is limited to the maximum value. In this case, although the value of actual motion vector can not be known, there is no problem in determining whether or not the orthogonal transformation is to be applied. Further, it should be noted that when the motion vector is transmitted, there is no need of transmitting the information for controlling the quantization characteristics.

FIG. **3** is a block diagram showing an encoder according to this invention, which includes a motion vector detector **10**, delay circuits **11**, **16**, **23**, **29**, **31** and **32**, subtracters **12** and **19**, an orthogonal transformer **13**, quantizers **14** and **17**, an inverse orthogonal transformer **15**, an adder **20**, a frame memory **21**, a variable delay circuit **22**, a code converter **26**, and an encoding controller **27**, all of which are coupled as shown.

Motion picture signals are applied, via an input terminal **1000**, to the motion vector detector **10** and the delay circuit **11**. The detector **10** is adapted to detect the magnitude of velocity and direction (viz., motion vector) of an object on a block by block basis, wherein each block is an N-line×M-pixel size (for example), and thence applies the motion vectors detected to the variable delay circuit **22** and the delay circuit **23**. The variable delay circuit **22** is suppied with a locally decoded signal from the frame memory **21**, and provides same with a delay according to the motion vector received, and then applies the output thereof (viz., prediction signal) to the subtracter **12** and the delay circuit **29**. It should be noted that the locally decoded signal applied to the variable delay circuit **22**, has already been delayed by about one frame. The delay circuit **11** provides the incoming motion picture signal with a delay corresponding to the time period required to detect the motion vector at the detector **10**, and applies the output thereof to the subtracter **12**. The subtracter **12** determines the difference between the two signals applied thereto, and outputs prediction error signals which are applied to the delay circuit **16**. The output of the subtracter **12** undergoes orthogonal transformation (Adamal transformation, discrete cosine transformation, etc.) at the orthogonal transformer **13** on a block by block basis, wherein the block size is preferably selected equal

to that of the block processed in the motion vector detector **10** and is preferably set $M=N=2^n$ (wherein n is a whole positive integer) in order to facilitate the data processing. The output of the orthogonal transformer **13** is then quantized at the quantizer **14**, and thereafter fed to the inverse orthogonal transformer **15** and the code converter **26**. The details of the code converter **26** will be discussed with reference to FIG. **4**. The output of the inverse orthogonal transformer **15** is applied to the adder **20**. On the other hand, the delay circuit **16** serves to delay the prediction error signal applied thereto by a time duration which the orthogonal transformer **13** requires to process the incoming prediction error signal. The subtracter **19** derives the difference between the outputs of the delay circuit **16** and the inverse orthogonal transformer **15**. The output of the subtracter **19** is quantized at the quantizer **17** which applies its output to the code converter **26** and to the adder **20**. The delay circuit **29** provides the prediction error signal, which is applied from the variable delay circuit **22**, with a delay corresponding to the time period which the blocks **13** and **15** require to process the incoming signals and to generate the outputs, and thereafter applies its output to the adder **20**.

The adder **20** is supplied with outputs from the inverse orthogonal transformer **15**, the quantizer **17** and the delay circuit **29**, and generates the locally decoded signal which is then fed to the frame memory **21** which stores approximately one frame data. As previously described, the variable delay circuit **22** provides the output of the frame memory **21** with a delay determined by the motion vector applied from the detector **10**, and thereafter produces its output as prediction signal. In the event that the motion vector assumes zero (viz., indicating no displacement of image in a given block), the total delay at the delay circuit **16**, the frame memory **21** and the variable delay circuit **22** is equal to one frame time. In this case, it is assumed that there exists no delay at each of the subtracter **12** and **19**, the quantizer **17** and the adder **20**.

The code converter **26** is supplied with the motion vector from the delay circuit **23** as well as the outputs of the quantizers **14** and **17**, and implements code conversion. The code converter **26** produces a monitor signal which is applied to the coding controller **27**. The monitor signal indicates, for example, the storage area left in a buffer memory within the code converter **26**. The coding controller **27** outputs two quantization characteristics control signals which are respectively supplied to the quantizers **14** and **17** in order to control the quantization characteristics of the quantizers **14** and **17**. The two quantization characteristics control signals are also fed back to the code converter **26** via the delay circuits **31** and **32**, each of which provides the incoming signal with a delay which is required at the inverse orthogonal transformer **15**. The detail of controlling the quantization characteristics is disclosed in U.S. Pat. No. 4,077,053 as referred to at the beginning paragraphs of this specfication.

The code converter **26** will be discussed in detail with reference to FIG. **4**. As shown in this figure, the code converter **26** includes (a) two encoders **261** and **262** which are respectively coupled to the quantizers **17** and **14**, (b) three encoders **263**, **264** and **265** which are respectively coupled to the delay circuits **31**, **32** and **23**, (c) a multiplexer **268** having the inputs thereof respectively coupled to the aforesaid five encoders, and (d) a buffer memory **269**. The buffer memory **269** has its input coupled to the output of the multiplexer **268**, and is coupled to the coding controller **27** (FIG. **3**) and also to a transmission line **3000**.

The output of the quantizer **17** is variable-word-length encoded at the encoder **261**, utilizing Huffmann codes (for example), and are converted into compressed image data, while the output of the equalizer **14** is also variable-word-length encoded at the encoder **262** utilizing Huffmann codes (for example). Similarly, the quatization characteristics control signals, applied from the delay circuits **31** and **32**, are also coded at the encoders **31** and **32**, respectively. On the other hand, the delayed motion vector is coded at the encoder **265**. It is easy to prepare Huffmann codes which corresponds to the distribution of motion vector. The outputs of the encoders **261**, **262**, **263**, **264** and **265** are combined at the multiplexer **268** into a predetermined order, and thereafter successively applied to the buffer memory **269**. This memory **269** is provided to temporarily store the coded information applied from the multiplexer **268** and to feed same into the transmission line **300** (or a suitable storage medium) at a defined rate. The buffer memory **269** applies the coding control signal, over a line **2627**, to the coding controller **27** (FIG. **3**). The coding control signal indicates buffer memory occupancy (viz., 0–100%).

Referring to FIG. **5**, wherein a decoder according to this invention is illustrated in block diagram form. The FIG. **5** arrangement includes an inverse code converter **50**, two delay circuits **52** and **57**, an inverse orthogonal transformer **51**, an adder **54**, a variable delay circuit **55**, and a frame memory **56**, all of which are coupled as shown.

Before describing the arrangement shown in FIG. **5**, detail reference is made to FIG. **6** which is a block diagram showing the details of the inverse code converter **50**. As shown, the converter **50** includes a demodulator **500**, a delay circuit **506**, and five decoders **501**, **502**, **503**, **504** and **505**. The demodulator **500** produces three kinds of outputs: (a) the results of the orthogonal transformations, and the difference between the prediction error and the result of the inverse orthogonal transformation (via a line **5056**), (b) the quantization characteristics control signals (via a line **5005**), and (c) the motion vector (via a line **5055**). The decoder **505** corresponds to the encoder **265**, and is adapted to inversely code convert the motion vector applied from the demultiplexer **500**. The decoded motion vector is applied to the delay circuit **57** (FIG. **5**) via a line **5003**.

The quantization characteristics control signals are decoded at the decoders **503** and **504**. More specifically, the decoder **503** is adapted to decode correctly the block signal wherein the prediction error signal (from the quantizer **17**) is encoded, while the decoder **504** serves to decode correctly the block signal wherein the result of the orthogonal transformation (from the quantizer **14**) is encoded. Otherwise, the decoders **503** and **504** do not function properly.

The outputs of the decoders **503** and **504** are fed to the decoders **501** and **502**, respectively. The decoders **501** and **502** codes the output of the delay circuit **506** using the quantization characteristics signals applied from **503** and **504**, respectively. It should be noted that the output of the delay circuit **506** is either the result of the orthogonal transformation or the difference between the prediction error signal and the inverse orthogonal transformation. The delay circuit **506** provides the input thereto with a delay which corresponds to the

Amazon.com, Inc., Amazon.com Services LLC - Ex. 1004, Page 000009

time for the decoder **503** or **504** to require for its processing.

Decodings at the decoders **501** and **502** will be decribed in detail. The decoder **501** decodes correctly an incoming block signal, if (a) the quantization characteristic signal from the decoder **503** is correctly decoded in connection with the incoming block signal and if (b) the difference between the prediction error signal and the inverse orthogonal transformation is to be decoded. On the other hand, similarly, the decoder **502** decodes correctly an incoming block signal, if (a) the quantization characteristic signal from the decoder **504** is correctly decoded in connection with the incoming block signal and if (b) the result of the orthogonal transform is to be decoded. Otherwise, the decoders **501** and **502** outputs zero. The output of the decoder **501** is fed to the delay circuit **52** via a line **5001**, while the output of the decoder **502** is applied to the inverse orthogonal transformer **51** via a line **5002**.

Returning to FIG. **5**, the block **51** inversely orthogonally transforms the decoded signal applied over the line **5002**, wherein there is no problem if a signal to be fed to the dealy cicuit **52** is present in the signal fed to the transformer **51**. Similarly, if the signal applied to the delay circuit **52** over the line **5001** includes a correctly decoded signal, then proper decoding operation is ensured. The input to the delay circuit **52** is delayed by a time which the inverse orthogonal transformer **51** requires for the operation thereof. The delay circuit **57** provides the decoded motion vector with the same delay as the delay circuit **52**. The variable delay ciruit **55** is supplied with the delayed motion vector and the output of the frame memory **56**, and produces a prediction signal using the delay vector. The prediction signal is applied to the adder **54**. The adder **54** further receives the outputs of the blocks **51** and **52***d*, and decodes the image signal which is applied to an outut terminal and also to the frame memory **56**. The frame memory **56** is sized to store one frame signal and outputs the preceding frame signal to the variable delay circuit **55**. The variable delay circuit is arranged is a similar manner as its counterpart provided in the encoder shown in FIG. **3**.

The foregoing description shows only preferred embodiments of the present invention. Various modifications are apparent to those skilled in the art without departing from the scope of the present invention. For example, in the case where the motion vector is used to control the quantizers **14** and **17** with respect to the quantization characteristics thereof, the delay circuit **23** is modified to have a tap coupled to the encoding controller **27**, wherein the delay at the tap is made equal to the total delay at the delay circuits **11** and **16**. In this case, if the motion vector reaches around the motion compensation limit, then the quantizer **17** is controlled to output zero, while, if the motion vector is zero or close to zero, the quantizer **14** is controlled to generate a signal with zero value, by way of example. On the other hand, in the case that the motion vector is in an intermediate range, the quantizers **14** and **17** are controlled, by moderate qunatization characteristics, to realize a medium picture quality as compared to the case where the quantizers **14** and **17** is utilized independently.

What is claimed is:

1. A method of interframe prediction encoding an incoming image signal by correlating consecutive frames, comprising the steps of:

(a) producing an interframe prediction signal;
(b) obtaining a prediction error signal by deriving a difference between said incoming image signal and said interframe prediction signal;
(c) causing said prediction error signal to undergo orthogonal transformation on a block by block basis;
(d) quantizing the resulting signal obtained at step (c) using a first quantizer;
(e) causing the quantized signal obtained at step (c) to undergo inverse orthogonal transformation;
(f) deriving a difference between said prediction error signal and the signal resulting from said inverse orthogonal transformation;
(g) quantizing the difference obtained at step (f) using a second quantizer; and
(h) code converting the results obtained at steps (d) and (g).

2. A method as claimed in claim **1**, further comprising a step for detecting a motion vector of said incoming image signal on a block by block basis, said motion vector being utilized to produce said interframe prediction signal.

3. An arrangement for prediction encoding an incoming image signal by correlating consecutive frames, said arrangement comprising:

a first means (**10**) for detecting a motion vector of said incoming image signal on a block by block basis;
a second means (**22**) for producing an interframe prediction signal by correlating consecutive frames via utilizing the output of said first means;
a third means (**12**) which receives said incoming image signal and said prediction signal to produce a prediction error signal by deriving a difference between the signals applied thereto;
a fourth means (**13**) for causing said prediction error signal to undergo orthogonal transformation on a block by block basis, said fourth means producing transformation coefficient signals;
a fifth means (**14**) for quantizing said transformation coefficient signals applied thereto from said fourth means;
a sixth means (**15**) for causing the quantized signal applied thereto from said fifth means to undergo inverse orthogonal transformation on a block by block basis;
a seventh means (**16**) which receives said prediction error signal and the output of said sixth means and which produces a difference between the two signals applied thereto;
an eighth means (**17**) for quantizing the output of said seventh means;
a ninth means (**20**) for adding said interframe prediction signal and the outputs of said sixth and eighth means, said ninth means generating a locally decoded signal;
a tenth means (**21**) for receiving said locally decoded signal, said tenth means providing said locally decoded signal with a delay corresponding to about one frame time; and
an eleventh means (**26**) for coding at least the outputs of said fifth and eighth means.

4. An arrangement for receiving a code converted signal from an encoder to interframe prediction decode a image signal, said code converted signal including at least two kinds of prediction error signals obtained by correlating two consecutive frames, said arrangement comprising:

a first means (**50**) for inverse code converting said two kinds of prediction error signals;

a second means (**51**) for causing one of the two inverse code converted prediction error signals to undergo inverse orthogonal transform;

a third means (**55**) for producing an interframe prediction signal using correlation between two consecutive frames;

a fourth means (**54**) for producing the decoded image signal, using said interframe prediction signal, the output of said second means and the other of the two inverse code converted prediction error signals, all of which are applied to said fourth means; and

a fifth means (**56**) for providing said decoded image signal having a delay corresponding to about one frame time, said fifth means applying the delayed signal to said third means.

* * * * *