US 20130211291A1

(19) United States

(12) Patent Application Publication

Tran

(10) Pub. No.: US 2013/0211291 A1

(43) Pub. Date: Aug. 15, 2013

(54) **PERSONAL EMERGENCY RESPONSE (PER) SYSTEM**

(71) Applicant: **Bao Tran**, Saratoga, CA (US)

(72) Inventor: **Bao Tran**, Saratoga, CA (US)

(21) Appl. No.: **13/792,040**

(22) Filed: **Mar. 9, 2013**

Related U.S. Application Data

(63) Continuation of application No. 13/338,266, filed on Dec. 28, 2011, now Pat. No. 8,461,988, which is a continuation of application No. 13/052,386, filed on Mar. 21, 2011, which is a continuation of application No. 12/770,553, filed on Apr. 29, 2010, which is a continuation of application No. 11/480,231, filed on Jun. 30, 2006, now Pat. No. 7,733,224, which is a continuation of application No. 11/252,279, filed on Oct. 16, 2005, now Pat. No. 7,420,472.

Publication Classification

(51) **Int. Cl.**

A61B 5/00	(2006.01)
A61B 5/0488	(2006.01)
A61B 7/04	(2006.01)
A61B 5/0205	(2006.01)
A61B 5/0476	(2006.01)
A61B 8/00	(2006.01)
A61B 5/01	(2006.01)
A61B 5/11	(2006.01)
A61B 5/0402	(2006.01)

(52) **U.S. Cl.**

CPC ***A61B 5/002*** (2013.01); ***A61B 5/1117*** (2013.01); ***A61B 5/1112*** (2013.01); ***A61B 5/0077*** (2013.01); ***A61B 5/0488*** (2013.01); ***A61B 7/045*** (2013.01); ***A61B 5/681*** (2013.01); ***A61B 5/6803*** (2013.01); ***A61B 5/6807*** (2013.01); ***A61B 5/6806*** (2013.01); ***A61B 5/0402*** (2013.01); ***A61B 5/0476*** (2013.01); ***A61B 5/0006*** (2013.01); ***A61B 5/7264*** (2013.01); ***A61B 5/6891*** (2013.01); ***A61B 8/00*** (2013.01); ***A61B 5/01*** (2013.01); ***A61B 5/02055*** (2013.01); ***A61B 5/0008*** (2013.01); ***A61B 5/0013*** (2013.01)

USPC **600/595**

(57) **ABSTRACT**

A method of automatically requesting assistance for a patient includes wearing a wireless device with one or more accelerometers on the patient to detect patient motion; determining a fall based on detected motions; and automatically requesting assistance for the patient if needed.

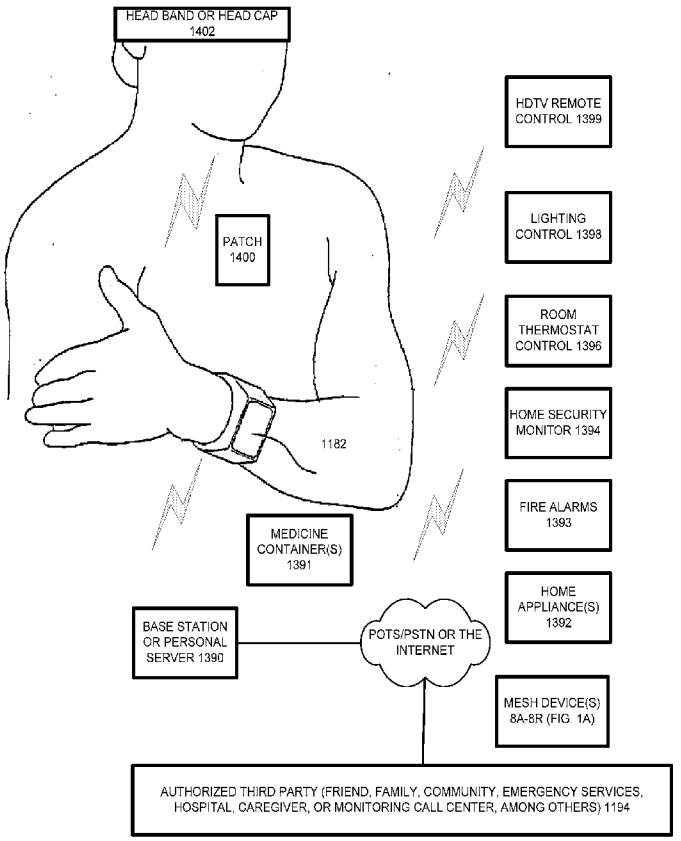

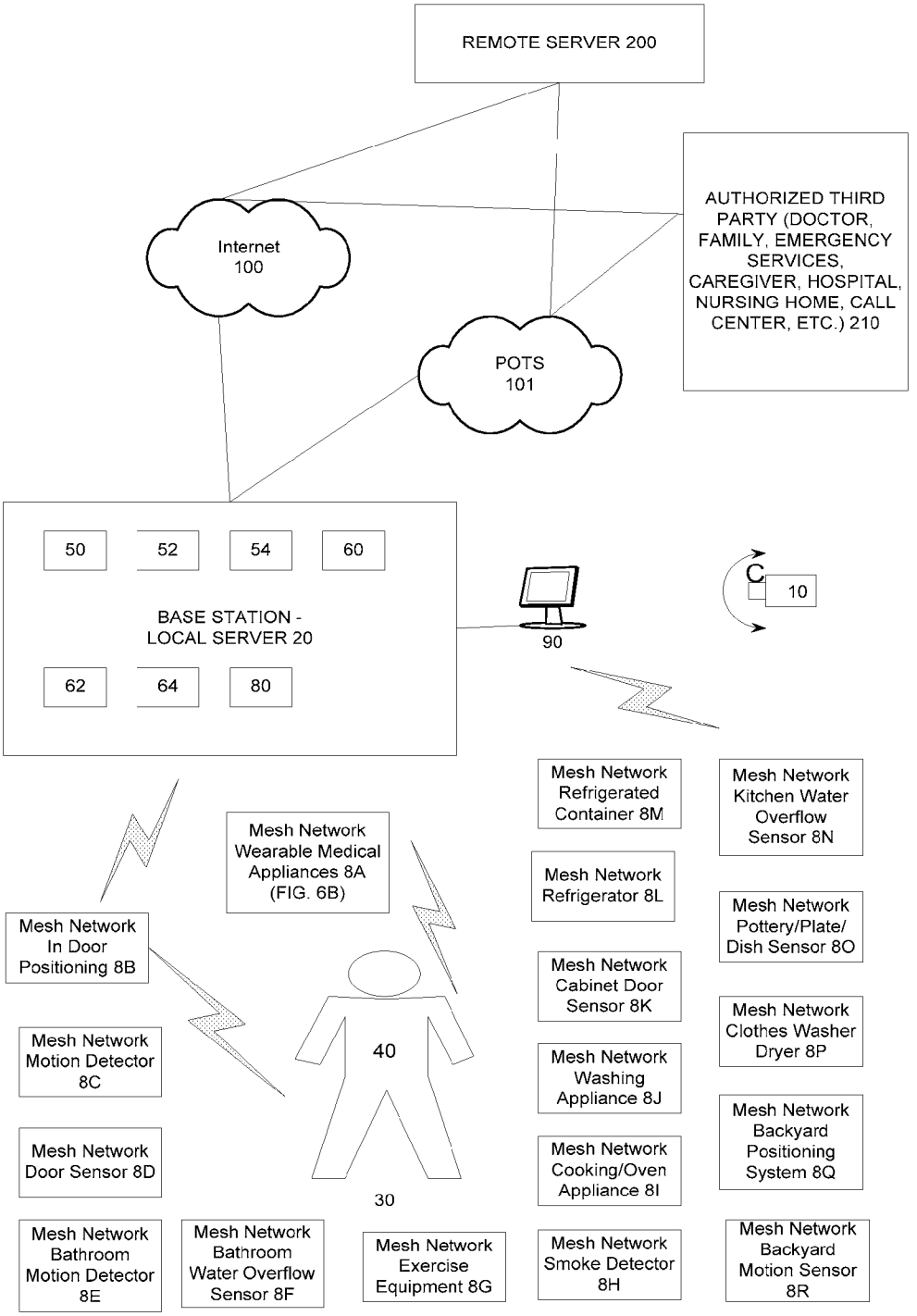
REMOTE SERVER 200
AUTHORIZED THIRD PARTY (DOCTOR, FAMILY, EMERGENCY SERVICES, CAREGIVER, HOSPITAL, NURSING HOME, CALL CENTER, ETC.) 210
Internet 100
POTS 101
50
52
54
60
BASE STATION - LOCAL SERVER 20
62
64
80
90
C
10
Mesh Network Refrigerated Container 8M
Mesh Network Kitchen Water Overflow Sensor 8N
Mesh Network Wearable Medical Appliances 8A (FIG. 6B)
Mesh Network Refrigerator 8L
Mesh Network Pottery/Plate/ Dish Sensor 8O
Mesh Network In Door Positioning 8B
Mesh Network Cabinet Door Sensor 8K
Mesh Network Clothes Washer Dryer 8P
Mesh Network Motion Detector 8C
40
Mesh Network Washing Appliance 8J
Mesh Network Backyard Positioning System 8Q
Mesh Network Door Sensor 8D
Mesh Network Cooking/Oven Appliance 8I
30
Mesh Network Bathroom Motion Detector 8E
Mesh Network Bathroom Water Overflow Sensor 8F
Mesh Network Exercise Equipment 8G
Mesh Network Smoke Detector 8H
Mesh Network Backyard Motion Sensor 8R

FIG. 1 A

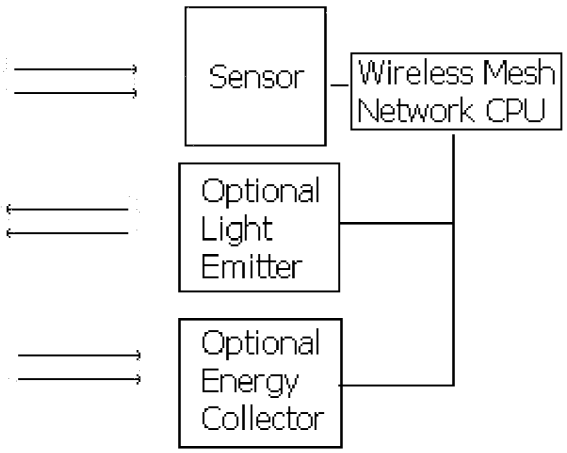
Sensor
Wireless Mesh Network CPU
Optional Light Emitter
Optional Energy Collector

FIG. 1B

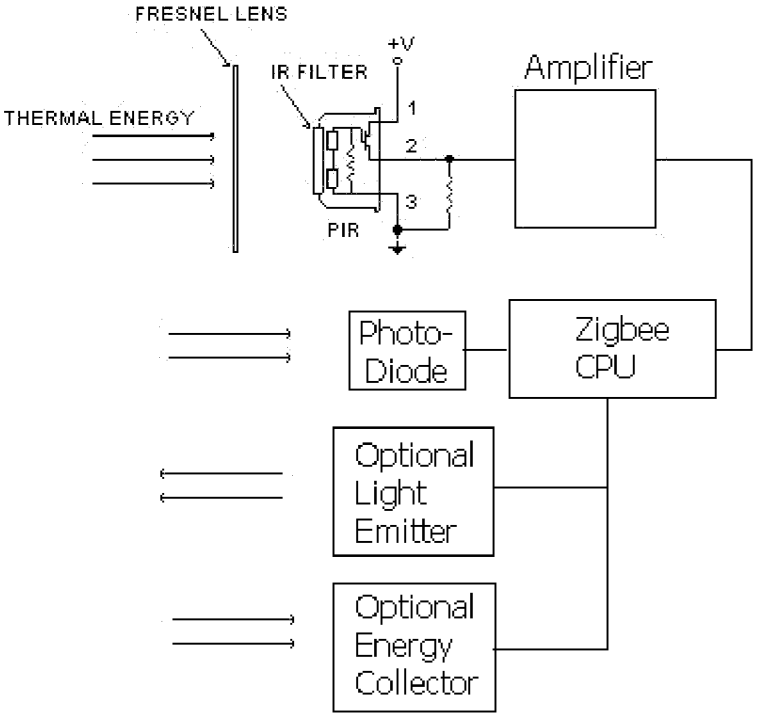
FRESNEL LENS
THERMAL ENERGY
IR FILTER
+V
1
2
3
PIR
Amplifier
Photo-Diode
Zigbee CPU
Optional Light Emitter
Optional Energy Collector

FIG. 1C

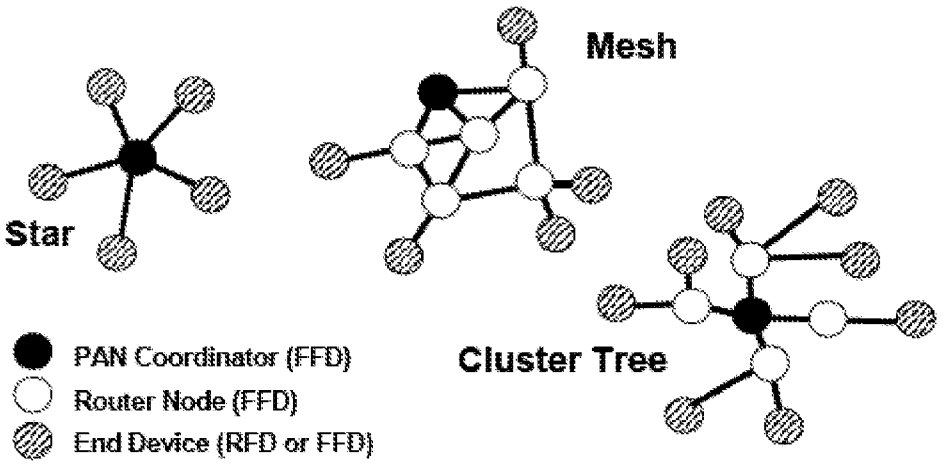
Mesh
Star
Cluster Tree
PAN Coordinator (FFD)
Router Node (FFD)
End Device (RFD or FFD)

FIG. 2

Build pattern of daily activities

Do

Detect if the user's daily activities are within a predetermined threshold of normal activities

Check that medication cabinet has been accessed on daily basis

Check door/window is closed in the evening unless specified in advance

Check that bathroom is not flooded

Check that patient is not in bathroom for excessive amounts of time

Check patient toilet for potential disease

Check for normal usage of exercise equipment in accordance with doctor recommendations

Check kitchen appliances to minimize risks of fire or flooding hazard

Check cloth washer/dryer for usage activity

Check refrigerator activity

Check backyard motion sensor for intrusion and/or assistance that may be required if the user is injured in the backyard

Check thermostat and heater/AC for temperature setting

Check sleeping activities

Check eating activities

Check weight

Check TV viewing or radio listening or computer usage habit

Check traversing speed on stair

If abnormality is detected, request assistance from authorized third party

Update daily activity data structure

Generate periodic summary/report/recommendations to person and authorized third parties

Loop

FIG. 3

Capture and transmit the person's daily activities over a wireless mesh network

Determine a pattern associated with the person's daily activities

Attach a housing having one or more bioelectric contacts couplable to the person, the housing selected from one of: a patch, a wristwatch, a band, a wristband, a chest band, a leg band, a sock, a glove, a foot pad, a head-band, an ear-clip, an ear phone, a shower-cap, an armband, an ear-ring, eye-glasses, sun-glasses, a belt, a sock, a shirt, a garment, a jewelry, a bed spread, a pillow cover, a pillow, a mattress, a blanket, each having one or more sensors in communication with the wireless mesh network

Detect a weakness in left half and right half of the person's body; a walking pattern for loss of balance or coordination; requesting hands/feet movement in a predetermined pattern and reading accelerometer output in accordance with the predetermined pattern; checking whether the person experienced dizziness or headache; displaying a text image and asking the person to read back the text image one eye at a time; using a speech recognizer to detect confusion, trouble speaking or understanding; and asking the person if numbness is felt in the body;

Request assistance if the person's current activity varies from the pattern or if a dangerous condition is detected

FIG. 4

Set up mesh network appliances (1000)
Determine patient position using in-door positioning system (1002)
Determine patient movement using accelerometer output (1004)
Determine vital parameter including patient heart rate (1006)
Determine if patient needs assistance based on in-door position, fall detection and vital parameter (1008)
Confirm prior to calling third party (1010)
If confirmed or non-responsive, make connection with third party and send voice over mesh network to appliance worn by the patient (1012)
If needed, call emergency personnel to get medical care (1014)

FIG. 5

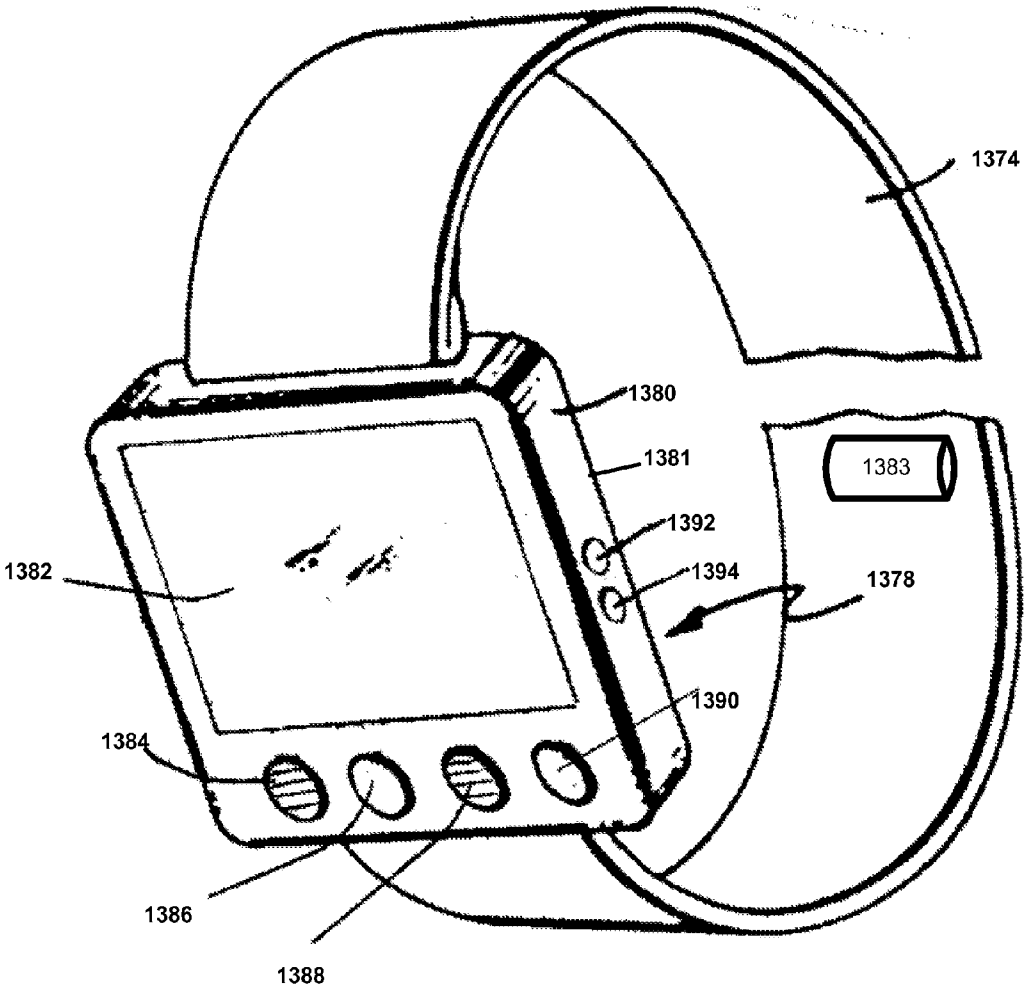

FIG. 6

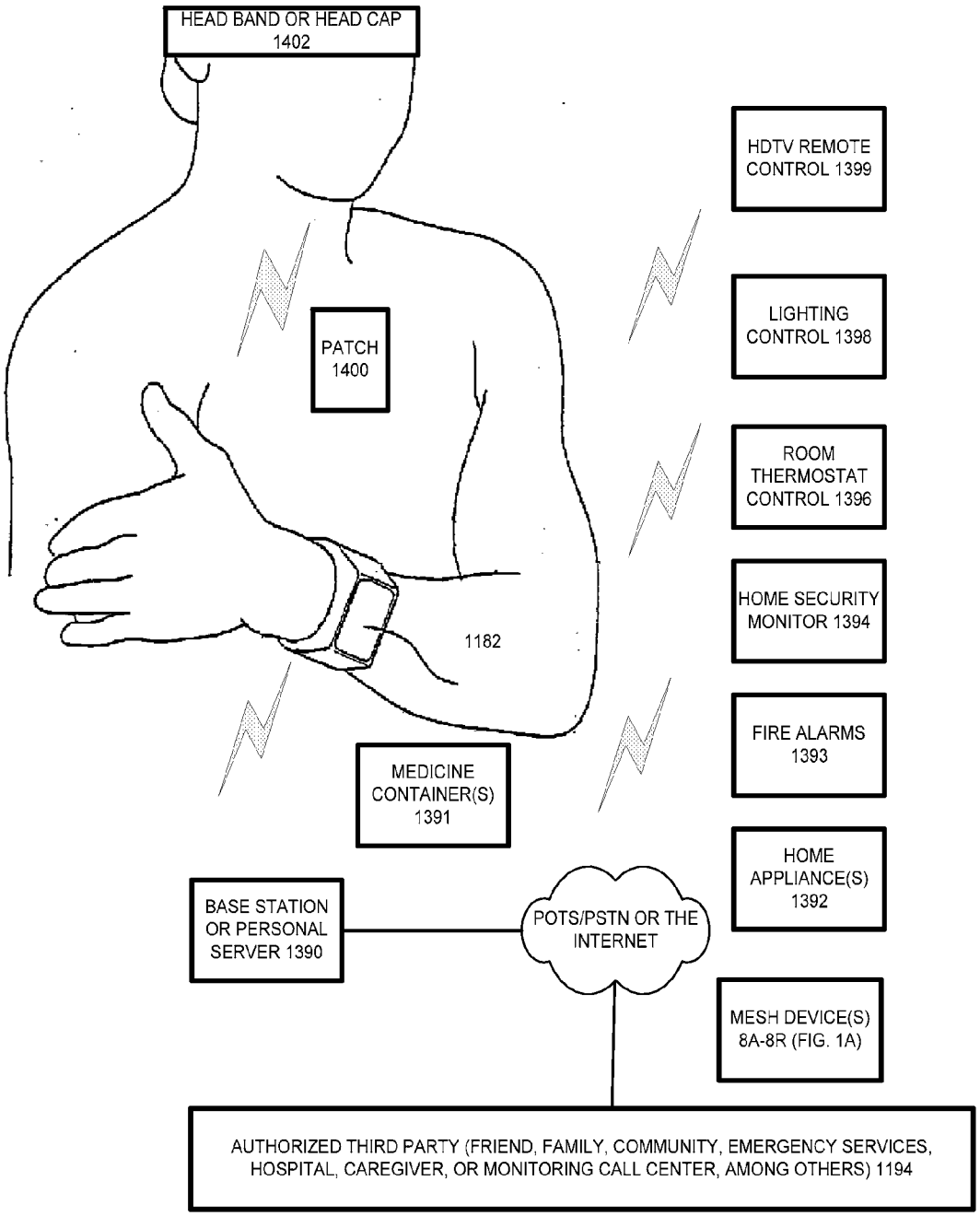
HEAD BAND OR HEAD CAP 1402
PATCH 1400
1182
MEDICINE CONTAINER(S) 1391
HDTV REMOTE CONTROL 1399
LIGHTING CONTROL 1398
ROOM THERMOSTAT CONTROL 1396
HOME SECURITY MONITOR 1394
FIRE ALARMS 1393
HOME APPLIANCE(S) 1392
MESH DEVICE(S) 8A-8R (FIG. 1A)
BASE STATION OR PERSONAL SERVER 1390
POTS/PSTN OR THE INTERNET
AUTHORIZED THIRD PARTY (FRIEND, FAMILY, COMMUNITY, EMERGENCY SERVICES, HOSPITAL, CAREGIVER, OR MONITORING CALL CENTER, AMONG OTHERS) 1194

FIG. 7

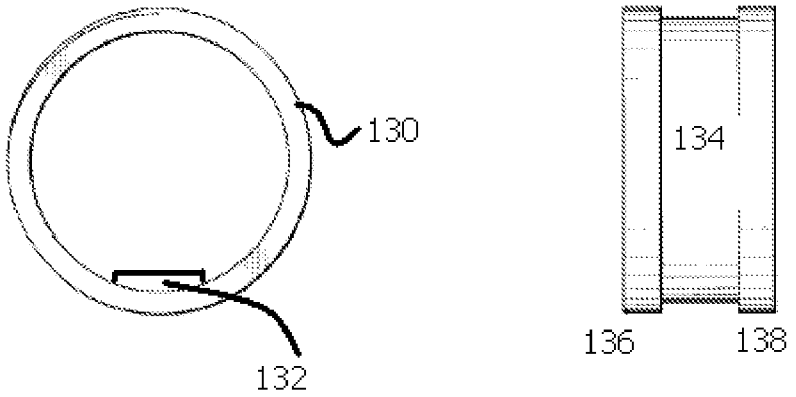

FIG. 8

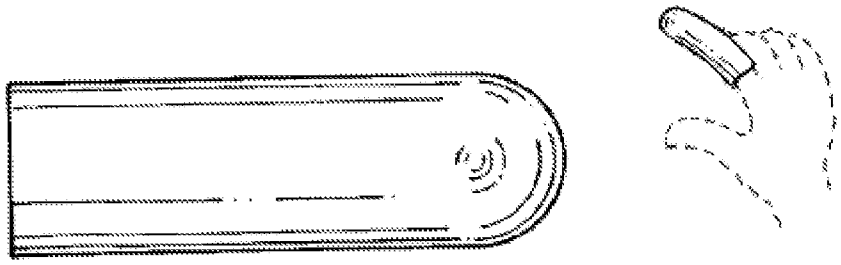

FIG. 9

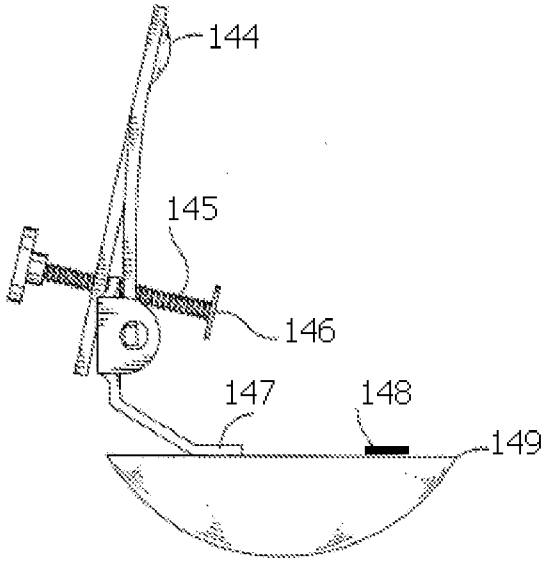

FIG. 10

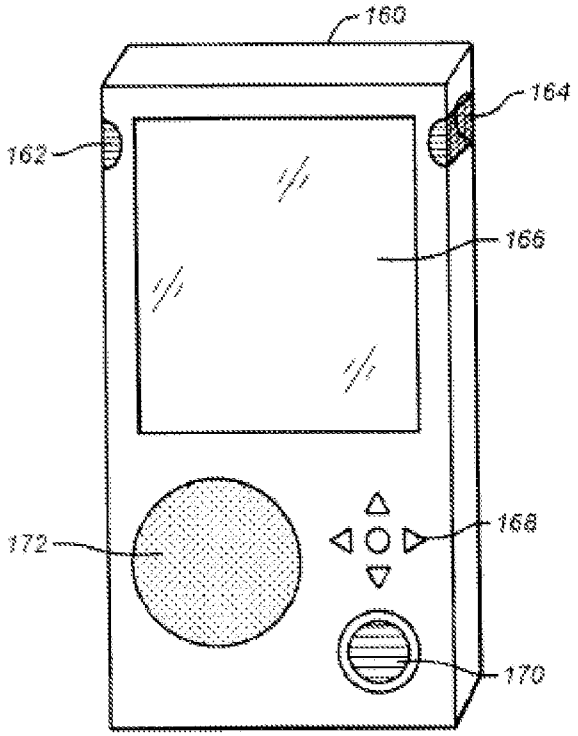

FIG. 11

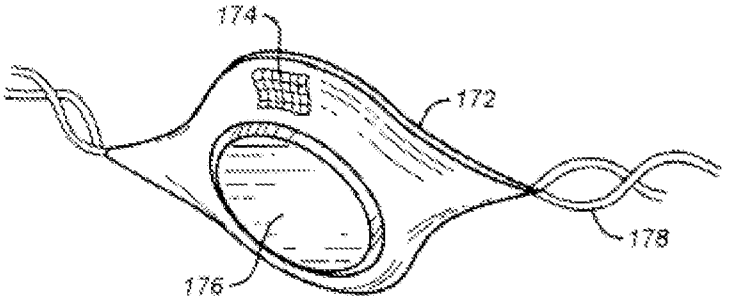

FIG. 12

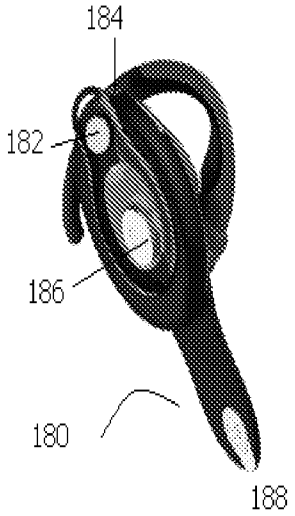

FIG. 13

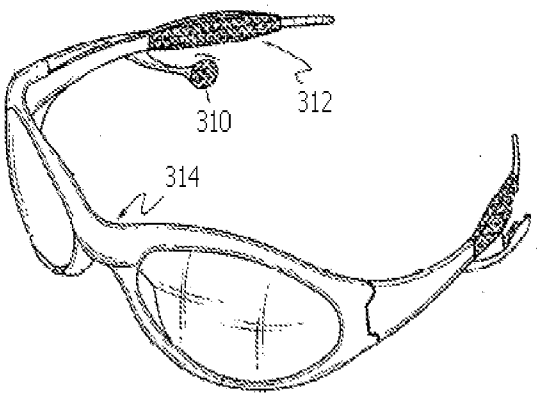

FIG. 14B

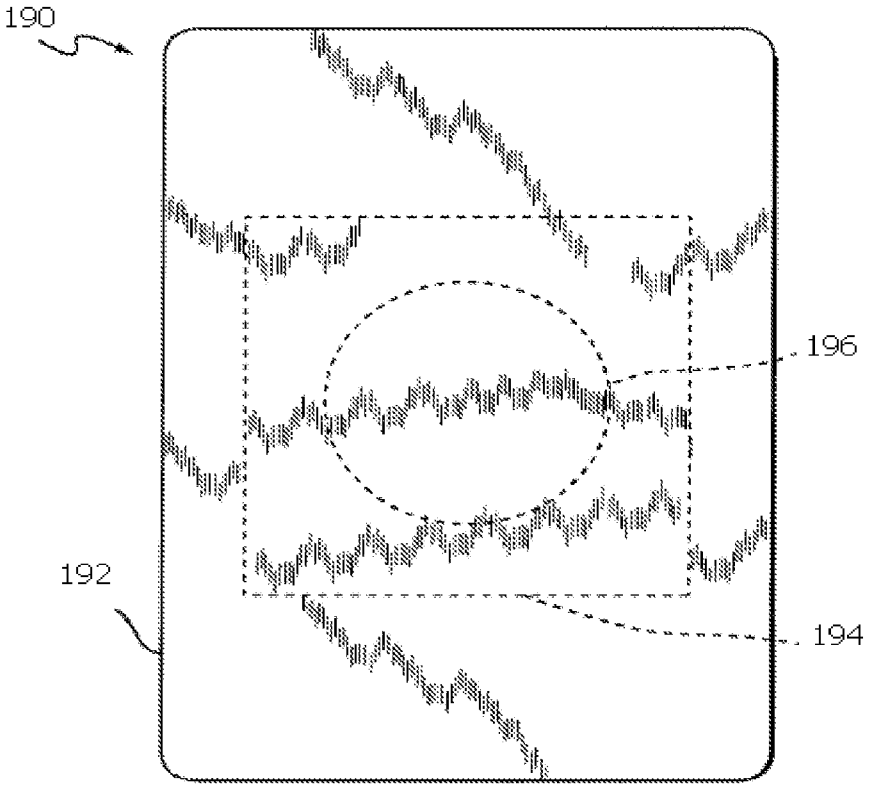

FIG. 14A

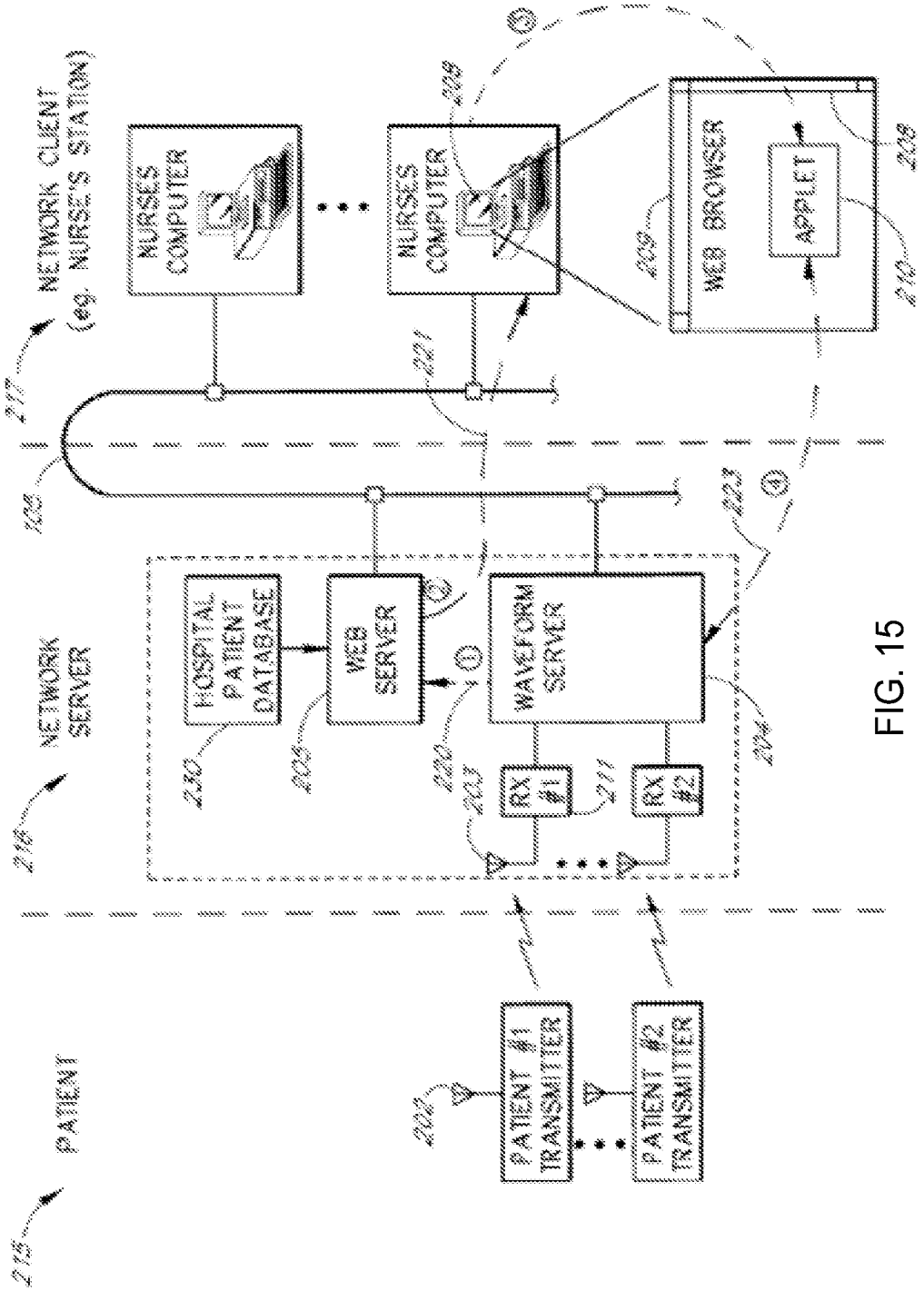
NETWORK CLIENT
(e.g. NURSE'S STATION)
NURSES COMPUTER
NURSES COMPUTER
WEB BROWSER
APPLET
NETWORK SERVER
HOSPITAL PATIENT DATABASE
WEB SERVER
WAVEFORM SERVER
RX #1
RX #2
PATIENT
PATIENT #1 TRANSMITTER
PATIENT #2 TRANSMITTER

FIG. 15

Generate a blood pressure model of a patient (2002)
Determine a blood flow velocity using a piezoelectric transducer (2004)
Provide the blood flow velocity to the blood pressure model to continuously estimate blood pressure (2006)

FIG. 16A

Attach monitoring device and calibration device to patient (2010)
Determine blood flow velocity from the monitoring device and actual blood pressure from the calibration device (2012)
Generate a blood pressure model based on the blood flow velocity and the actual blood pressure (2014)
Remove calibration device (2016)
Determine blood flow velocity (2018)
Provide blood flow velocity to the blood pressure model to estimate blood pressure (2020)

FIG. 16B

Detect weakness in left half and right half of patient body - arms, legs, face (3000)
Detect walking pattern for loss of balance or coordination (3002)
Ask user to move hands/feet in a predetermined pattern (3004)
Read accelerometer output in accordance with predetermined pattern movement (3006)
Provide accelerometer output to a pattern classifier (3008)
Check whether patient is experiencing dizziness or sudden, severe headache with no known cause (3010)
Display a text image and ask the patient to read back the text image, one eye at a time (3012)
Use speech recognizer to detect confusion, trouble speaking or understanding (3014)
Ask patient if they feel numbness in the body- arms, legs, face (3016)
Ask patient to squeeze gauge/force sensor to determine force applied during squeeze (3018)

FIG. 16C

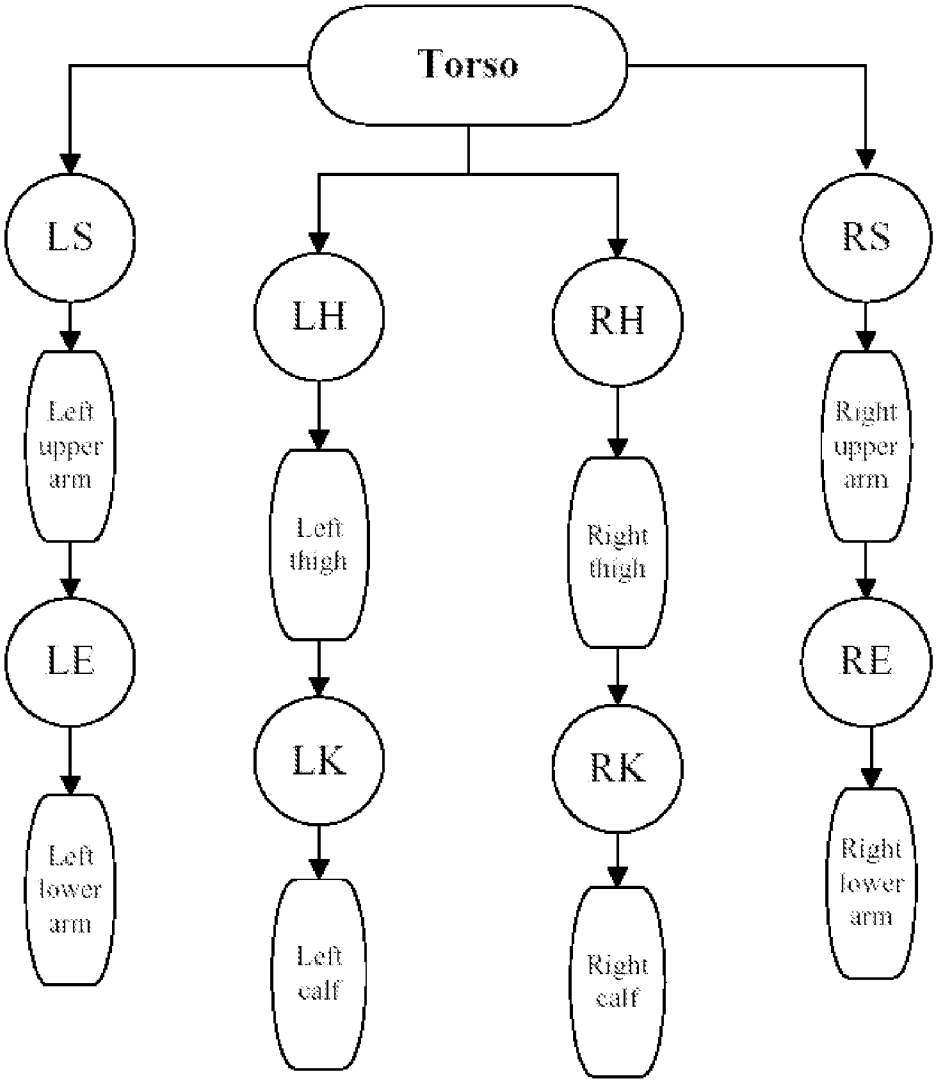
Torso
LS
LH
RH
RS
Left upper arm
Left thigh
Right thigh
Right upper arm
LE
LK
RK
RE
Left lower arm
Left calf
Right calf
Right lower arm

FIG. 16D

Compare historical left shoulder (LS) strength against current LS strength (3200)
Compare historical right shoulder (RS) strength against current RS strength (3202)
Compare historical left hip (LH) strength against current LH strength (3204)
Compare historical right hip (RH) strength against current RH strength (3206)
If variance between historical and current strength exceeds threshold, generate warning (3208)

FIG. 16E

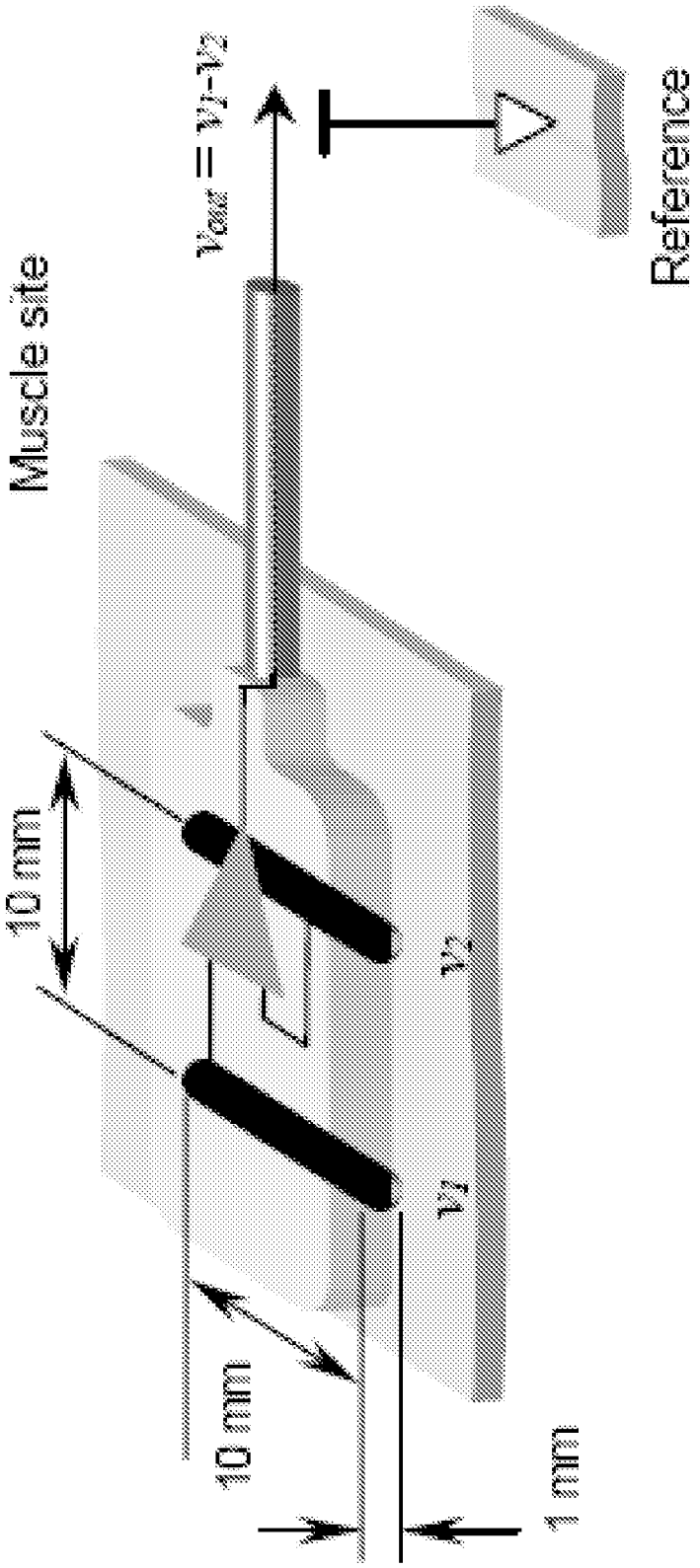

FIG. 17A

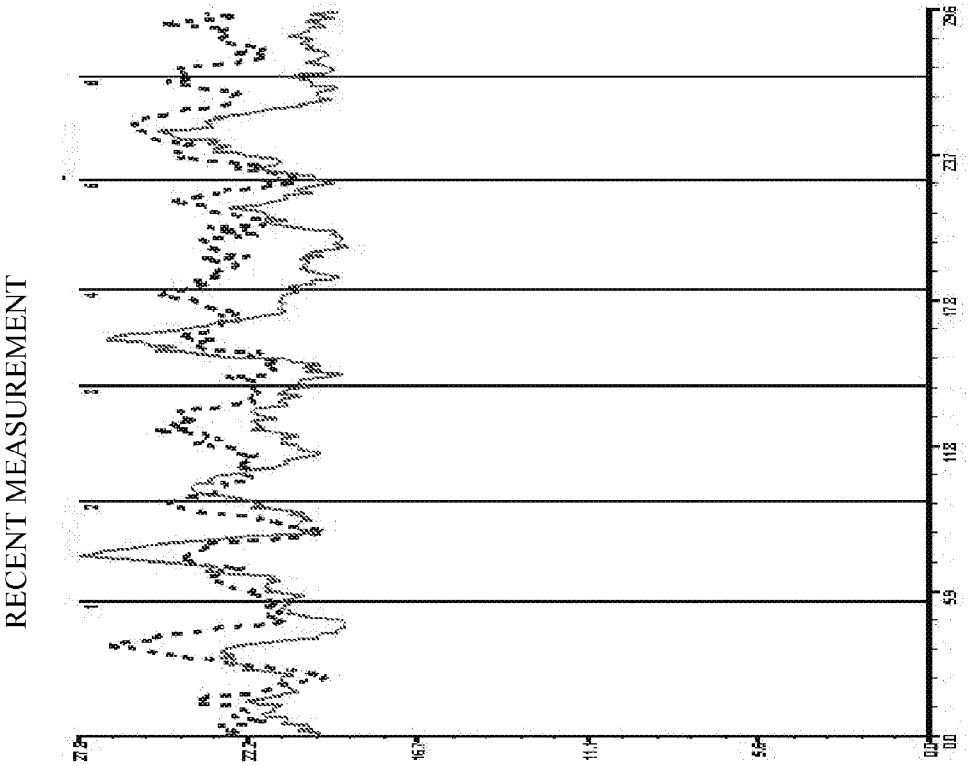

FIG. 17C

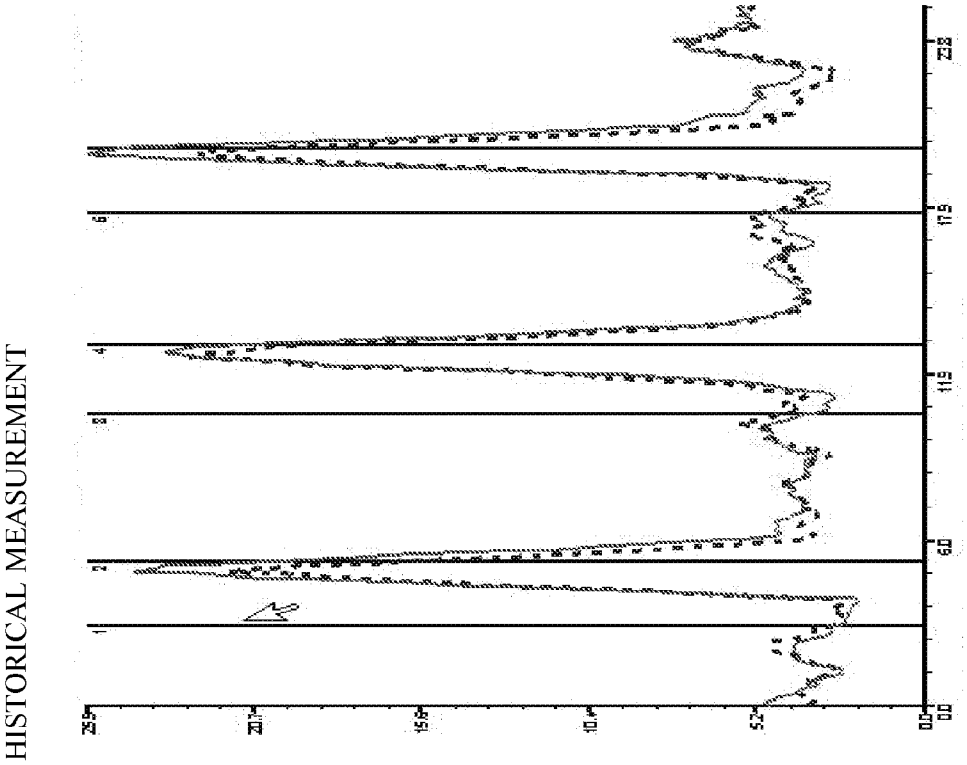

FIG. 17B

PERSONAL EMERGENCY RESPONSE (PER) SYSTEM

[0001] This application is a continuation of application Ser. No. 13/338,266, filed Dec. 28, 2011, Ser. No. 13/052,386, filed Mar. 21, 2011, application Ser. No. 12/770,553 filed Apr. 29, 2010, application Ser. No. 11/480,231 filed Jun. 30, 2006, and application Ser. No. 11/252,279 filed Oct. 16, 2005, the contents of which are incorporated by reference.

BACKGROUND

[0002] This invention relates generally to a PER system.

[0003] Improvements in living condition and advances in health care have resulted in a marked prolongation of life expectancy for elderly and disabled population. These individuals, a growing part of society, are dependent upon the delivery of home health and general care, which has its own set of challenges and drawbacks. This population needs continuous general, as well as medical, supervision and care. The creation of retirement facilities and old age homes, as well as other geriatric facilities, provides only a partial solution to the problems facing the geriatric population.

[0004] Typically, home care is carried out either by the patient's family or by nonprofessional help. The monitoring equipment at home care facilities is usually minimal or nonexistent, and the patient has to be transported to the doctor's office or other diagnostic facility to allow proper evaluation and treatment. Patient follow-up is done by means of home visits of nurses which are of sporadic nature, time consuming and generally very expensive. A visiting nurse can perform about 5-6 home visits per day. The visits have to be short and can usually not be carried out on a daily basis. Moreover, a visiting nurse program provides no facilities for continuous monitoring of the patient and thus no care, except in fortuitous circumstances, in times of emergency.

SUMMARY

[0005] In one aspect, a method of automatically requesting assistance for a patient includes wearing a wireless device with one or more accelerometers on the patient to detect patient motion; determining a fall based on detected motions; and automatically requesting assistance for the patient if needed.

[0006] In another aspect, a method of automatically requesting assistance for a patient includes wearing a mobile device with one or more accelerometers on the patient to capture patient motion; applying a pattern classifier to determine patient daily activities based on detected motions; and automatically requesting assistance from a remote party if needed.

[0007] In another aspect, a method to provide personal emergency response for a patient, includes wearing a wireless device with at least one or more accelerometers on the patient to detect patient motion; determining a fall based on detected motions including one or more changes in height and one or more accelerations associated with the one or more changes in height; waiting for a predetermined period to detect if the patient can independently recover from the fall and automatically requesting assistance if the patient is unable to recover from the fall; and requesting assistance for the patient if needed if the patient pushes a button requesting assistance.

[0008] In another aspect, systems and methods of operating a base station with a plurality of stations in a building indoor location determination system includes communicating with a wearable tag through at least one of the stations or the base station; estimating a location of the wearable tag based on times of arrival of a signal; and determining if a fall has occurred and requesting help through the base station.

[0009] In yet another aspect, a location determination system includes a plurality of base stations; and at least one tag providing the base stations with information about the tag, wherein at least one of the base stations estimates a location of the tag based on times of arrival of the signal of the tag and based on location information of the base stations.

[0010] In implementations of the above aspects, one or more of the following may be present. A base unit may be connected to a call center over a telephone line, wherein the call center contacts a wearer over a speaker on the base unit to determine if a responder can assist or to send local emergency services if needed. The system distinguishes between falls and other types of normal body movement. The system can include detecting a fall and notifying an emergency service automatically without a user pressing a button to call for help. A base unit and a wearable unit can work with a service subscription which includes access to a personal password-protected website. The operation of the system can include wearing a portable unit that captures movements; and sending activity data by the Base Unit over a phone line to the website. The system may track only movement to maintain privacy and independence. The operation may include detecting a fall, sending an alert through a base unit over the phone line to a call center which contacts the wearer over a speaker on the base unit, determining if a responder can assist and sending local emergency services if needed. Motions may be detected with an accelerometer and daily activities may be determined based on detected motions. The system may include capturing movement activities and comparing the movement activities to fall patterns and determining if a fall has occurred. A call center operator can attempt to speak to the user through a speaker on the Base Unit. If the user does not respond, the system can call a designated responder or local emergency services as needed. The system can determine if a user falls when away from home and send fall alert data to a call center using a cell phone. The call for help can include a current location for the cell phone if the phone has GPS or WiFi assisted positioning system.

[0011] In another aspect, a wearable motion sensing device includes a motion sensor wearable by a human being to sense motion of the human being; a processor; wireless communications circuitry; an audio speaker or beeper; and a microphone.

[0012] In yet another aspect, a method of detecting motion of a human includes placing a wearable motion sensing device on the human, the wearable motion sensing device including a pendant that is attached to the wearable motion sensing device at a location of the wearable motion sensing device relative to a motion sensor of the wearable motion sensing device wherein a mass of the pendant urges the motion sensor towards the human being; generating an acceleration signature based on sensed acceleration of the motion sensor.

[0013] In implementations of the above aspects, one or more of the following may be present. The motion sensor can be worn on the neck through a necklace or on the stomach through a belt. The motion sensor comprises at least one accelerometer for generating an acceleration signature based on the sensed acceleration of the motion sensor, further comprising: means for matching the acceleration signature with at

least one of a plurality of stored acceleration signatures, wherein each stored acceleration signatures corresponds with type of motion; and means for identifying the type of motion of the object based on the matching of the acceleration signature. A pendant can be detachable from the wearable motion sensing device. The motion sensor further ca be a temperature sensor or a moisture sensor. A first electrode and a second electrode can be used with electrocardiogram processing computer code, where the device receives electrical signal coupled from the human being, through the first and second electrode, to the electrocardiogram processing computer code. The system includes matching the acceleration signature with at least one of a plurality of stored acceleration signatures, wherein each stored acceleration signatures corresponds with type of motion; and identifying the type of motion of the human being based on matching of the acceleration signature. The motion sensor includes accelerometers that detect motion, comprising processing circuitry for matching and identifying the type of motion. The wearable motion sensing device distributes the acceleration signature matching processing if the processing capability is available to wearable motion sensing device through available network connections, and distributes the acceleration signature matching processing to save the wearable motion sensing device processing power or to increase processing speed of the wearable motion sensing device.

[0014] In one aspect, systems and methods for identifying an activity of an object includes identifying each elemental motion of a sequence of elemental motions of a device attached to the object; and identifying the activity of the object, comprising matching the sequence of identified elemental motions of the device with a library of stored sequences of elemental motions, wherein each stored sequence of elemental motions corresponds with an activity.

[0015] In another aspect, an apparatus for identifying an activity of an object includes a controller operative to identify each elemental motion of a sequence of elemental motions of device attached to the object; and the controller operative to identify the activity of the object, including matching the sequence of identified elemental motions of the object with stored sequences of elemental motions, wherein each stored sequence of elemental motions corresponds with an activity.

[0016] In yet another aspect, a system for identifying an activity of an animate or inanimate object includes means for identifying each elemental motion of a sequence of elemental motions of an device attached to the animate or inanimate object; and means for identifying the activity of the animate or inanimate object, including matching the sequence of identified elemental motions of the device with a library of stored sequences of elemental motions, wherein each stored sequence of elemental motions corresponds with an activity; wherein identifying each elemental motion comprises: means for generating an acceleration signature based on sensed acceleration of the device; means for matching the acceleration signature with at least one of a plurality of stored acceleration signatures, wherein each stored acceleration signatures corresponds with a type of motion; and means for identifying the type of motion of the device based on the matching of the acceleration signature with the stored acceleration signature.

[0017] Implementations of the above aspects may include one or more of the following. The identifying each elemental motion includes generating an acceleration signature based on sensed acceleration of the device; matching the acceleration signature with at least one of a plurality of stored acceleration signatures, wherein each stored acceleration signatures corresponds with a type of motion; and identifying the type of motion of the device based on the matching of the acceleration signature with the stored acceleration signature. The system or method includes refining identification of the activity, including analyzing timing of the identified activity. The timing can be at least one of an hour of a day, a day of a week, a week of a month, a month of a year. The system or method includes refining identification of the activity, including analyzing at least one identified location of the identified activity or analyzing a rate of change of a location of the object. The identification of the activity includes analyzing patterns of a plurality of identified activities. The system can identify a behavior of the object, for example it can identify each activity of a sequence of activities of the animate or inanimate object and the behavior of the object, including matching the sequence of identified activities of the object with a stored sequences of activities, wherein each stored sequence of activities corresponds with an identified behavior. The system can track at least one behavior of the animate or inanimate object over time. This can be done by identifying patterns of the at least one behavior. The system can group the patterns of objects based on a common parameter between the objects. The system can identify changes in at least one behavior of the object. The system can send an alert upon identification of predetermined set of behavior changes. A time domain analysis on an acceleration signal can be done to identify signatures of the acceleration signal.

[0018] In yet another aspect, a monitoring system includes one or more wireless nodes forming a wireless mesh network; a user activity sensor including a wireless mesh transceiver adapted to communicate with the one or more wireless nodes using the wireless mesh network; and a digital monitoring agent coupled to the wireless transceiver through the wireless mesh network to request assistance from a third party based on the user activity sensor.

[0019] Implementations of the system may include one or more of the following. The user activity sensor includes: an indoor position sensor, a motion sensor, a door sensor, a bathroom sensor, a water overflow sensor, an exercise equipment sensor, a smoke detector, an oven sensor, a cooking range sensor, a dish washer sensor, a cabinet door sensor, a refrigerator sensor, a refrigerator container sensor, a kitchen water flow sensor, a dish sensor, a bowl sensor, a chair sitting sensor, a sofa sitting sensor, a bed sensor, a weight sensor, a television viewing sensor, a radio listening sensor, an EMG detector, EEG detector, an EKG detector, an ECG detector, a bioimpedance sensor, an electromagnetic detector, an ultrasonic detector, an optical detector, a differential amplifier, an accelerometer, a video camera, a sound transducer, a digital stethoscope. The digital monitoring agent comprises one of: a Hidden Markov Model (HMM) recognizer, a dynamic time warp (DTW) recognizer, a neural network, a fuzzy logic engine, a Bayesian network, an expert system, a rule-driven system. The agent monitors user activity without requiring the sensor to be worn on the body. The agent monitors cooking appliances for a hazardous condition and shuts down the appliances using the mesh network. An in-door positioning system communicates with one or more mesh network appliances to provide location information. A call center coupled to the appliance to provide a human response. A web server coupled to the mesh network and to the POTS to provide information to an authorized remote user. A wireless router

coupled to the mesh network and wherein the wireless router comprises one of: 802.11 router, 802.16 router, WiFi router, WiMAX router, Bluetooth router, X10 router. A mesh network appliance coupled to a power line to communicate X10 data to and from the mesh network. The appliance transmits and receives voice from the person over the mesh network. Bioimpedance data can be used to determine one of: total body water, compartmentalization of body fluids, cardiac monitoring, blood flow, skinfold thickness, dehydration, blood loss, wound monitoring, ulcer detection, deep vein thrombosis, hypovolemia, hemorrhage, blood loss, heart attack, stroke attack. A patch having second BI or EKG sensor can be in communication with the wireless transceiver. The appliance transmits and receives voice from the person over the mesh network to one of: a doctor, a nurse, a medical assistant, a caregiver, an emergency response unit, a family member. The system can store and analyze patient information such as medicine taking habits, television viewing habits, radio listening habits, eating and drinking habits, sleeping habits, or excise habits. A housing having one or more bioelectric contacts can be placed on the patient, the housing selected from one of: a patch, a wristwatch, a band, a wristband, a chest band, a leg band, a sock, a glove, a foot pad, a head-band, an ear-clip, an ear phone, a shower-cap, an armband, an ear-ring, eye-glasses, sun-glasses, a belt, a sock, a shirt, a garment, a jewelry, a bed spread, a pillow cover, a pillow, a mattress, a blanket, each having one or more sensors in communication with the wireless mesh network.

[0020] In another aspect, a method to monitor a person includes capturing and transmitting the person's daily activities over a wireless mesh network; determining a pattern associated with the person's daily activities; and requesting assistance if the person's current activity varies from the pattern or if a dangerous condition is detected.

[0021] In implementations, the method includes attaching a housing having one or more bioelectric contacts coupleable to the person, the housing selected from one of: a patch, a wristwatch, a band, a wristband, a chest band, a leg band, a sock, a glove, a foot pad, a head-band, an ear-clip, an ear phone, a shower-cap, an armband, an ear-ring, eye-glasses, sun-glasses, a belt, a sock, a shirt, a garment, a jewelry, a bed spread, a pillow cover, a pillow, a mattress, a blanket, each having one or more sensors in communication with the wireless mesh network. The method includes detecting a weakness in left half and right half of the person's body; a walking pattern for loss of balance or coordination; requesting hands/feet movement in a predetermined pattern and reading accelerometer output in accordance with the predetermined pattern; checking whether the person experienced dizziness or headache; displaying a text image and asking the person to read back the text image one eye at a time; using a speech recognizer to detect confusion, trouble speaking or understanding; and asking the person if numbness is felt in the body.

[0022] In another aspect, a monitoring system for a person includes one or more wireless nodes and a stroke sensor coupled to the person and the wireless nodes to determine a stroke attack. In another aspect, a monitoring system for a person includes one or more wireless nodes and an electromyography (EMG) sensor coupled to the person and the wireless nodes to determine a stroke attack. In yet another aspect, a health care monitoring system for a person includes one or more wireless nodes forming a wireless mesh network; a wearable appliance having a sound transducer coupled to the wireless transceiver; and a bioelectric impedance (BI) sensor coupled to the wireless mesh network to communicate BI data over the wireless mesh network. In a further aspect, a heart monitoring system for a person includes one or more wireless nodes forming a wireless mesh network and a wearable appliance having a sound transducer coupled to the wireless transceiver; and a heart disease recognizer coupled to the sound transducer to determine cardiovascular health and to transmit heart sound over the wireless mesh network to a remote listener if the recognizer identifies a cardiovascular problem. The heart sound being transmitted may be compressed to save transmission bandwidth. In yet another aspect, a monitoring system for a person includes one or more wireless nodes; and a wristwatch having a wireless transceiver adapted to communicate with the one or more wireless nodes; and an accelerometer to detect a dangerous condition and to generate a warning when the dangerous condition is detected. In yet another aspect, a monitoring system for a person includes one or more wireless nodes forming a wireless mesh network; and a wearable appliance having a wireless transceiver adapted to communicate with the one or more wireless nodes; and a heartbeat detector coupled to the wireless transceiver. The system may also include an accelerometer to detect a dangerous condition such as a falling condition and to generate a warning when the dangerous condition is detected.

[0023] Implementations of the above aspect may include one or more of the following. The wristwatch determines position based on triangulation. The wristwatch determines position based on RF signal strength and RF signal angle. A switch detects a confirmatory signal from the person. The confirmatory signal includes a head movement, a hand movement, or a mouth movement. The confirmatory signal includes the person's voice. A processor in the system executes computer readable code to transmit a help request to a remote computer. The code can encrypt or scramble data for privacy. The processor can execute voice over IP (VOIP) code to allow a user and a remote person to audibly communicate with each other. The voice communication system can include Zigbee VOIP or Bluetooth VOIP or 802.XX VOIP. The remote person can be a doctor, a nurse, a medical assistant, or a caregiver. The system includes code to store and analyze patient information. The patient information includes medicine taking habits, eating and drinking habits, sleeping habits, or excise habits. A patient interface is provided on a user computer for accessing information and the patient interface includes in one implementation a touch screen; voice-activated text reading; and one touch telephone dialing. The processor can execute code to store and analyze information relating to the person's ambulation. A global positioning system (GPS) receiver can be used to detect movement and where the person falls. The system can include code to map the person's location onto an area for viewing. The system can include one or more cameras positioned to capture three dimensional (3D) video of the patient; and a server coupled to the one or more cameras, the server executing code to detect a dangerous condition for the patient based on the 3D video and allow a remote third party to view images of the patient when the dangerous condition is detected.

[0024] In another aspect, a monitoring system for a person includes one or more wireless bases; and a cellular telephone having a wireless transceiver adapted to communicate with the one or more wireless bases; and an accelerometer to detect

a dangerous condition and to generate a warning when the dangerous condition is detected.

[0025] Advantages of embodiments of the system may include one or more of the following. The system provides timely assistance and enables elderly and disabled individuals to live relatively independent lives. The system monitors physical activity patterns, detects the occurrence of falls, and recognizes body motion patterns leading to falls. Continuous monitoring of patients is done in an accurate, convenient, unobtrusive, private and socially acceptable manner since a computer monitors the patterns and/or images and human involvement is allowed only under pre-designated events. The system allows skilled doctors, nurses, physical therapists, family members, and other scarce resources to assist patients in a highly efficient manner since they can do the majority of their functions remotely.

[0026] Additionally, a sudden change of activity (or inactivity) can indicate a problem. The remote healthcare provider may receive alerts over the Internet or urgent notifications over the phone in case of such sudden accident indicating changes. Reports of health/activity indicators and the overall well being of the individual can be compiled for the remote healthcare provider. Feedback reports can be sent to monitored subjects, their designated informal caregiver and their remote healthcare provider. Feedback to the individual can encourage the individual to remain active. The content of the report may be tailored to the target recipient's needs, and can present the information in a format understandable by an elder person unfamiliar with computers, via an appealing patient interface. The remote healthcare provider will have access to the health and well-being status of their patients without being intrusive, having to call or visit to get such information interrogatively. Additionally, remote healthcare provider can receive a report on the health of the monitored subjects that will help them evaluate these individuals better during the short routine check up visits. For example, the system can perform patient behavior analysis such as eating/drinking/smoke habits and medication compliance, among others.

[0027] The system reduces costs by automating data collection and compliance monitoring. Regular monitoring of the basic wellness parameters provides significant benefits in helping to capture adverse events sooner, reduce hospital admissions, and improve the effectiveness of medications, hence, lowering patient care costs and improving the overall quality of care. Operators in the call centers or emergency response units get high quality information to identify patients that need urgent care so that they can be treated quickly, safely, and cost effectively. The Web based tools allow easy access to patient information for authorized parties such as family members, neighbors, physicians, nurses, pharmacists, caregivers, and other affiliated parties to improved the Quality of Care for the patient.

BRIEF DESCRIPTION OF THE DRAWINGS

[0028] FIG. **1**A illustrates an exemplary system for monitoring a person.

[0029] FIG. **1**B shows an exemplary motion detector.

[0030] FIG. **1**C shows an exemplary PIR motion detector.

[0031] FIG. **2** shows an exemplary ZigBee mesh network.

[0032] FIG. **3** shows an exemplary process for monitoring the person.

[0033] FIG. **4** shows another exemplary for monitoring the person.

[0034] FIG. **5** illustrates yet another exemplary process for monitoring the person.

[0035] FIG. **6** shows an exemplary wrist-watch based assistance device.

[0036] FIG. **7** shows an exemplary mesh network working with the wearable appliance of FIG. **6**A.

[0037] FIGS. **8**-**13** and FIGS. **14**A-**14**B show various exemplary wearable appliances to monitor a patient.

[0038] FIG. **15** show exemplary systems for performing patient monitoring.

[0039] FIGS. **16**A-**16**B show exemplary blood pressure determination processes.

[0040] FIGS. **16**C-E shows exemplary stroke determination processes.

[0041] FIG. **17**A shows an exemplary EMG sensor.

[0042] FIGS. **17**B-C show exemplary EMG graphs of a patient.

DESCRIPTION

[0043] FIG. **1**A shows an exemplary mesh network patient monitoring system. The system can operate in a home, a nursing home, or a hospital. In this system, one or more mesh network appliances **8** are provided to enable wireless communication in the home monitoring system. As shown in FIG. **1**A, a wireless network such as a mesh network of sensors **8**A-**8**R is shown. One implementation of mesh network is a ZigBee mesh network, which is discussed in more details in FIG. **2** below. ZigBee is built on an Institute of Electrical and Electronics Engineers (IEEE) global standard, 802.15.4, similar to the standards that govern Bluetooth and Wi-Fi. Open standards encourage innovation and competition, which bring down costs. Unlike Bluetooth and Wi-Fi networks, which require central hubs that distribute information to dispersed devices, ZigBee allows devices to form mesh networks, where each unit can relay information to its neighbors. Mesh networks are more robust than their hub-and-spoke counterparts; if a node breaks down, other nodes can automatically reroute transmissions around it. Mesh networking could let ZigBee systems link as many as 64,000 devices; Bluetooth networks, by contrast, are limited to just eight.

[0044] The mesh network includes one or more mesh network wearable medical appliances **8**A which can monitor physiological measurements such as EKG, EMG, EEG, bio-impedance sensor, heart rate sensor, blood pressure sensor, or insulin sensor, among others. More details on these devices are described in commonly owned, co-pending applications that are incorporated by reference above. Appliances **8**A in the mesh network can be one of multiple portable physiological transducer, such as a blood pressure monitor, heart rate monitor, weight scale, thermometer, spirometer, single or multiple lead electrocardiograph (ECG), a pulse oxymeter, a body fat monitor, a cholesterol monitor, a signal from a medicine cabinet, a signal from a drug container, a signal from a commonly used appliance such as a refrigerator/stove/oven/washer, or a signal from an exercise machine, such as a heart rate. As will be discussed in more detail below, one appliance is a patient monitoring device that can be worn by the patient and includes a single or bi-directional wireless communication link, generally identified by the bolt symbol in FIG. **1**, for transmitting data from the appliances **8** to the local hub or receiving station or base station server **20** by way of a wireless radio frequency (RF) link using a proprietary or non-proprietary protocol.

[0045] The mesh network includes an in-door positioning **8**B. The system has two or more wireless mesh network nodes that communicate with a mobile mesh network node. The radio signal strength indication (RSSI) is used to determine distance between two nodes, and triangulation is used to determine position. A localization process can be used to improve the position determination. In one embodiment, the mobile node periodically sends out packets containing RSSI and accelerometer data. The other two nodes receive the packets. After a packet is successfully received, RF signal strength RSSI reading is determined. The resulting signal strength measurements from the fixed sensing nodes are used to determine the wearer's location. Due to uncertainty associated with noisy data and the signal strength's nonlinearity, a probabilistic Monte Carlo localization technique to implement a particle filter to localize the location. Particle filters work by first distributing random samples called particles over the space being observed. Each particle represents a possible physical location in the environment. A probability value is assigned to each particle. This probability represents the likelihood that the person is at the location specified by the particle. At each time step, each particle is reevaluated and its probability value is updated according to the ZigBee signal strength measurements. Less likely particles are then redistributed around more likely particles. This is done by building a cumulative sum graph of the normalized probabilities of each particle. This graph is then randomly sampled to create a histogram that dictates where the particles should be distributed at the next time step. The particles concentrate around locations that have a higher probability of being the person's location. After the particles have their new coordinates, a small amount of random noise is added to each particle's location so that they're distributed around likely locations instead of concentrating at a single point. The location of the person resides at the intersection of two imaginary spheres centered at each of the sensing nodes, with radii proportional to the signal strength.

[0046] The in-door positioning system **8**B links one or more mesh network appliances to provide location information. Inside the home or office, the radio frequency signals have negligible multipath delay spread (for timing purposes) over short distances. Hence, radio strength can be used as a basis for determining position. Alternatively, time of arrival can be used to determine position, or a combination of radio signal strength and time of arrival can be used. Position estimates can also be achieved in an embodiment by beamforming, a method that exchanges time-stamped raw data among the nodes. While the processing is relatively more costly, it yields processed data with a higher signal to noise ratio (SNR) for subsequent classification decisions, and enables estimates of angles of arrival for targets that are outside the convex hull of the participating sensors. Two such clusters of ZigBee nodes can then provide for triangulation of distant targets. Further, beamforming enables suppression of interfering sources, by placing nulls in the synthetic beam pattern in their directions. Another use of beamforming is in self-location of nodes when the positions of only a very small number of nodes or appliances are known such as those sensors nearest the wireless stations. In one implementation where each node knows the distances to its neighbors due to their positions, and some small fraction of the nodes (such as those nearest a PC with GPS) of the network know their true locations. As part of the network-building procedure, estimates of the locations of the nodes that lie within or near the convex hull of the nodes with known position can be quickly generated. To start, the shortest distance (multihop) paths are determined between each reference node. All nodes on this path are assigned a location that is the simple linear average of the two reference locations, as if the path were a straight line. A node which lies on the intersection of two such paths is assigned the average of the two indicated locations. All nodes that have been assigned locations now serve as references. The shortest paths among these new reference nodes are computed, assigning locations to all intermediate nodes as before, and continuing these iterations until no further nodes get assigned locations. This will not assign initial position estimates to all sensors. The remainder can be assigned locations based on pairwise averages of distances to the nearest four original reference nodes. Some consistency checks on location can be made using trigonometry and one further reference node to determine whether or not the node likely lies within the convex hull of the original four reference sensors.

[0047] In two dimensions, if two nodes have known locations, and the distances to a third node are known from the two nodes, then trigonometry can be used to precisely determine the location of the third node. Distances from another node can resolve any ambiguity. Similarly, simple geometry produces precise calculations in three dimensions given four reference nodes. But since the references may also have uncertainty, an alternative procedure is to perform a series of iterations where successive trigonometric calculations result only in a delta of movement in the position of the node. This process can determine locations of nodes outside the convex hull of the reference sensors. It is also amenable to averaging over the positions of all neighbors, since there will often be more neighbors than are strictly required to determine location. This will reduce the effects of distance measurement errors. Alternatively, the network can solve the complete set of equations of intersections of hyperbola as a least squares optimization problem.

[0048] In yet another embodiment, any or all of the nodes may include transducers for acoustic, infrared (IR), and radio frequency (RF) ranging. Therefore, the nodes have heterogeneous capabilities for ranging. The heterogeneous capabilities further include different margins of ranging error. Furthermore, the ranging system is re-used for sensing and communication functions. For example, wideband acoustic functionality is available for use in communicating, bistatic sensing, and ranging. Such heterogeneous capability of the sensors **40** can provide for ranging functionality in addition to communications functions. As one example, repeated use of the communications function improves position determination accuracy over time. Also, when the ranging and the timing are conducted together, they can be integrated in a self-organization protocol in order to reduce energy consumption. Moreover, information from several ranging sources is capable of being fused to provide improved accuracy and resistance to environmental variability. Each ranging means is exploited as a communication means, thereby providing improved robustness in the presence of noise and interference. Those skilled in the art will realize that there are many architectural possibilities, but allowing for heterogeneity from the outset is a component in many of the architectures.

[0049] A mesh network motion detector **8**C can be used in the network. FIG. **1**B shows an exemplary system that includes an active or passive motion sensor connected to a wireless mesh network processor. For certain applications

such as night guide light, the wireless mesh network processor can control an optional light emitter such as a light bulb or LED array for evening lighting purposes when motion is detected. For ease of placement, the system can include an energy collector or harvester device such as a solar cell to power the entire system.

[0050] The motion sensors can be grouped into two categories. The first are passive devices, such as PIR systems, stereoscopic vision and swept-focus ranging systems. The second are active devices, such as laser, microwave and ultrasonic range finding systems.

[0051] In one embodiment, the sensor can be an ultrasonic ranging device such as a Polaroid ranging module. This device is an active time-of-flight device developed for their cameras to allow automatic camera focusing. It determines the range to a target by measuring elapsed time between the transmission of a "chirp" of pulses and a detected echo. The one millisecond chirp consists of four discrete frequencies composed of 8 cycles at 60 KHz, 8 cycles at 56 KHz, 16 cycles at 52.5 KHz, and 24 cycles at 49.41 KHz. This pulse train increases the probability of signal reflection from a wide range of targets.

[0052] In another embodiment, the motion sensor can be a radio detection and ranging (RADAR) K-Band microwave RF (radio frequency) transmitter whose signal gets reflected by the target person. The reflected signal will have a Doppler shift proportional to the target speed. This Doppler frequency shift is detected in the receiver, amplified, filtered, and then digitized in an analog-to-digital converter (ADC), and passed onto the digital signal processing (DSP) chip. The DSP chip filters out false and low-level return signals to identify the speed of the person. The speed, along with various statistics and averages, is then sent over the wireless mesh network. In one implementation, the sensor sends out high frequency (such as 24 GHz) radio waves and measures the difference between the signal it transmitted and the signal bounced back to it and relays this information to the DSP to determine the speed of the individual. In yet another embodiment, a microwave signal is used to detect motion.

[0053] FIG. **1**C shows one implementation of a PIR motion sensor. A pyroelectric sensor is used with a crystalline material that generates a surface electric charge when exposed to heat in the form of infrared radiation. When the amount of radiation striking the crystal changes, the amount of charge also changes and can then be measured with a sensitive FET device built into the sensor. The sensor has two sensing elements connected in a voltage bucking configuration. This arrangement cancels signals caused by vibration, temperature changes and sunlight. A body passing in front of the sensor will activate first one and then the other element whereas other sources will affect both elements simultaneously and be cancelled. The radiation source must pass across the sensor in a horizontal direction when sensor pins **1** and **2** are on a horizontal plane so that the elements are sequentially exposed to the IR source. The FET source terminal pin **2** connects through a pulldown resistor of about 100 K to ground and feeds into a two stage amplifier having signal conditioning circuits. The amplifier is typically bandwidth limited to below 10 Hz to reject high frequency noise and is followed by a window comparator that responds to both the positive and negative transitions of the sensor output signal. A filtered power source of from 3 to 15 volts should be connected to the FET drain terminal pin **1**. One exemplary device is the RE200B PIR sensor and an exemplary module is the QK76 PIR Motion Detector Module, available from Q Kits Ltd. Of Kingston Ontario, whose output is an active high pulse of approximately 0.5 seconds and remains active as long as there is motion. A focusing lens is used in front of the sensor to focus thermal energy. The output of the sensor is provided to an amplifier, which output is provided to a mesh network wireless chip such as a single chip ZigBee transceiver with processor available from Freescale or Texas Instrument (ChipCon). The ZigBee chip can receive data from a photodiode and control a light emitter (such as LED array or light bulb) to provide night lighting in one option. This embodiment can also optionally harvest solar energy to charge the device when light is available.

[0054] A combination of active and passive motion sensors can be used for the mesh network motion detector **8**C. They inject energy (light, microwaves or sound) into the environment in order to detect a change. In one embodiment, a beam of light crosses the room near the door, and a photosensor on the other side of the room detects the beam. When a person breaks the beam, the photosensor detects the change in the amount of light and sends a signal over the mesh network. In another embodiment, a radar detects when someone passes near the door. The radar sends out a burst of microwave radio energy and waits for the reflected energy to bounce back. When a person moves into the field of microwave energy, it changes the amount of reflected energy or the time it takes for the reflection to arrive, and the radar sends a signal over the mesh network to indicate a person is crossing the zone and optionally opens the door. Similarly, an ultrasonic transducer can be used to send sound waves, bouncing them off a target and waiting for the echo.

[0055] Passive motion sensors can be used as well. In one embodiment, the motion sensing such as those on lights (and security systems) is a passive system that detects infrared energy. These sensors are known as PIR (passive infrared) detectors or pyroelectric sensors. The sensor is sensitive to the temperature of a human body which has a skin temperature of about 93 degrees F. and radiates infrared energy with a wavelength between 9 and 10 micrometers. Therefore, the sensors are typically sensitive in the range of 8 to 12 micrometers. The sensor can be a photo-sensor—the infrared light bumps electrons off a substrate, and the electrons are detected and amplified into a signal that is then sent over the mesh network to the controller. The sensor looks for a rapid change in the amount of infrared energy. When a person walks by, the amount of infrared energy in the field of view changes rapidly and is detected. The motion sensor can be a wide field of view by using suitable lens covering the sensor to focus and bend light through plastic lenses.

[0056] In a basic embodiment, a single motion sensor **8**C can be placed between the bed of the user and the bathroom. In a case where only a door sensor **8**D is provided within the system, the door sensor **8**D can be placed on the door of the bathroom. Such basic configuration can determine whether the user being monitored has gotten out of bed or has gone to the bathroom after a predetermined time. The daily living activity is captured and the information is captured for pattern analysis by the base station **20**. For example, the pattern analysis can determine if the user remains in bed a specified length of time beyond the usual waking time or has not gone from the bed to the bathroom for a predetermined time period. If an abnormal lack of user activity is determined, the system can request the third-party **210** to take preventive action. A

status report can be sent to the third party **210** indicating a potential problem with the patient.

[0057] A mesh network door sensor **8**D can transmit door opening/closing to the base station **20**. The door sensor can be magnetic sensors, or can be a wire that complete a circuit when the door is closed, can be an optical beam that is interrupted when the door moves, a reed-switch that detects door movement, or can be any suitable method to detect door opening or closing. The system can also be applied to windows to detect window opening and closing.

[0058] A mesh network bathroom motion detector **8**E is provided to detect motions within a specific room, in this case a bathroom. Room specific sensors such as a mesh network bathroom water overflow sensor **8**F can be provided. In one embodiment, a pair of wires is positioned on the bathroom floor and when liquid shorts the wires, a signal is sent over the mesh network to indicate bathtub overflow problem. Other room specific sensors can include a toilet sensor (not shown). The toilet sensor can simply detect lid opening/closing operations. In another implementation, the toilet sensor can include piezoelectric sensors that sense the viscosity of the patient excrements. In yet other implementations, the toilet sensor includes temperature sensor or other chemical analyzers that determine the composition or indicators thereof and forward the information over the mesh network.

[0059] The system also receives information from mesh network enabled exercise equipment **8**G. Data transmitted by the equipment can include the length of the exercise, the type of exercise, the calories burned, the distance exercised, and the heart rate, among others.

[0060] The system can receive information from mesh network smoke detector or fire alarm device **8**H. In one embodiment, if the smoke detector **8**H detects a fire, the smoke detector **8**H can turn on the lights on the floor that guide the patient to safety.

[0061] The system can also monitor cooking related activities. In one embodiment, a kitchen motion sensor is used. A mesh network cooking or oven appliance **8**I transmits cooking duration and temperature and other parameters to the base station **20** for monitoring in case the patient accidentally left the oven or cooking device on. A mesh network washing appliance **8**J can provide washing duration and completion time to the base station **20**. Further, a mesh network cabinet door sensor **8**K can provide usage data for certain important items in a cabinet (such as medication, among others). A mesh network refrigerator **8**L provides information such as opening/closing of the refrigerator and other useful data such as type and remaining quantity of items in a particular refrigerated container **8**M. The kitchen can also incorporate a kitchen water overflow sensor **8**N near the sink. A mesh network pottery/plate/dish sensor **8**O can be used to monitor if the patient is using these items on a frequent basis.

[0062] When an oven/stove safety detector module or software on the base station **20** receives information indicating that the oven or stove is on from sensor **8**I, the system determines whether the oven or stove should be turned off. For example, if the patient is sleeping on a bed or sofa and the oven is on for an extended period of time, the base station **20** can instruct the mesh network oven appliance **8**I to reduce the heat and page the patient. If the patient answers the page, the system can display the oven condition and request patient instruction. If the patient does not respond or respond with instruction to turn off the oven, the base station **20** can instruct the appliance **8**I to turn off the oven. The system can also receive data from a cloth washer/dryer **8**P to determine usage.

[0063] For the backyard, a mesh network positioning system **8**Q can be used. Additionally, a backyard motion sensor **8**R can communicate data over the mesh network for security as well as safety monitoring purposes.

[0064] In one heterogeneous sensor network embodiment, ZigBee nodes are used for local data communication, and high through put WiFi nodes are used to improve sensor network performance and reduce the nodes' energy consumption by offloading some of the wireless responsibilities to devices that can be plugged into power sources. The structure is analogous to a highway overlaid on a roadway system. Sensor data can then enter and exit the 802.11 highway at multiple interchanges in order to bypass the side roads, the wireless ZigBee nodes to increase bandwidth and reduce energy on average because the nodes are not solely responsible for moving data through the network.

[0065] Other appliances can be a bed spread or couch cover that includes a pressure transducer to detect a person sitting on the bed or couch. Another embodiment uses a simple contact switch that is depressed when the person sits on the bed or couch. The device can also be placed under chairs to detect sitting at a table. The pressure transducer or contact switch is connected to a mesh network processor/transceiver to transmit each occurrence when the user sits on a chair or rests on the bed. Based on the contact switch(es), the system can determine how long the user lies on the bed, and based on EEG sensors on the sheet, the system can determine how long the user sleeps and the quality of the sleep.

[0066] In another embodiment, a pressure transducer can be provided on a chair that measure the user's weight each time he or she uses the chair. Similarly, a bed transducer or scale can be provided to capture the user's weight and transmit the weight data over the mesh network. For a bed scale, two beam shaped load cells are provided at two ends of the bed along with support bars. The total weight is thus distributed over these two beams. The beam shaped load cell has a deflectable beam portion. Strain transducers for measuring deflection of the beam portion are located inside the beam portion. The strain transducer communicates its portion of the total weight to the mesh network weight processor. The bed scale is adjusted to compensate for the weight of the bed and the mattress. When the individual rests on the bed, the total weight is taken and the empty weight of the bed and mattress is subtracted to arrive at the weight of the individual person. Similarly, for a chair scale, each leg of the chair rests on a load cell with a deflectable beam portion. The total weight is thus distributed over the four leg beams. The beam shaped load cell has a deflectable beam portion. Strain transducers for measuring deflection of the beam portion are located inside the beam portion. The strain transducer communicates its portion of the total weight to the mesh network weight processor. The chair scale is adjusted to compensate for the weight of the chair. When the individual sits on the chair, the total weight is taken and the empty weight of the chair is subtracted to arrive at the weight of the individual person.

[0067] In another embodiment, a temperature sensor can be provided on the chair, sofa, couch, or bed to detect the temperature of the patient and transmit the information over the mesh network.

[0068] In another embodiment, ZigBee sensors are placed along with light switches. When the user turns on the light in a room, the activity is recorded along with the coordinate of

the switch. Such fixed location information is useful in fine tuning or recalibrating the in-door position sensor **8**B. The light switches can be powered by an energy harvester such as a piezoelectric device that is energized by the flip of the switch. Alternatively, solar cell can be used to power the circuitry associated with the switches.

[0069] In another embodiment, sensors can be placed on the stairs to determine the stair climbing pace of the user and track his/her performance to detect if there are cardiovascular problems. For example, stroke victims can take longer to climb a stair case. In one embodiment, a light sensor and a light beam can be placed at the top and bottom of a stair case and when the beam is interrupted, the system can record the time required to go up-stair or down-stair.

[0070] The mesh network also covers entertainment devices such as ZigBee enabled televisions and stereo equipment. Thus, the type of entertainment enjoyed by the patient can also be monitored by the mesh network. Interactive TV responses or alternatively TV channel flipping/switching can be monitored by system to sense the alertness of the user. If the user turns on the TV, but shows no motion for an extended period of time, this can be viewed as potential stroke problem where the viewer is extremely passive when he/she normally is much more active.

[0071] Appliances **8**A-**8**R in the mesh network can include home security monitoring devices, door alarm, window alarm, home temperature control devices, fire alarm devices, among others. For example, within a house, a user may have mesh network appliances that detect window and door contacts, smoke detectors and motion sensors, video cameras, key chain control, temperature monitors, CO and other gas detectors, vibration sensors, and others. A user may have flood sensors and other detectors on a boat. An individual, such as an ill or elderly grandparent, may have access to a panic transmitter or other alarm transmitter. Other sensors and/or detectors may also be included. The user may register these appliances on a central security network by entering the identification code for each registered appliance/device and/or system. The mesh network can be Zigbee network or 802.15.4 network. More details of the mesh network is shown in FIG. **2** and discussed in more detail below.

[0072] The system can be used to monitor and assist elderly persons, functionally impaired persons or the like on a temporary short-term basis or on a long-term basis. The base station **20** is linked to various mesh network sensors provided within a number of activity detectors **8**A-**8**R. Activity detectors **8**A-**8**R monitor various activities of daily living of the user of the monitoring system. The base station **20** has a DAA to interface a voice communication circuit to the POTS **101** so that the user can wirelessly communicate with the authorized third party such as a call center without having to walk to a speaker phone. The base station **20** can also store voicemail and other messages such as pill reminder messages and play the messages for the user.

[0073] The patient monitoring system integrates sensor data from different activity domains to make a number of determinations at predetermined times on a twenty-four hour basis. One activity domain determination within the patient monitoring system includes movement of the person being monitored. In this movement domain determinations are made by the in-door position sensor **8**B and/or the motion detector **8**C to determine whether the user is up and around. Another activity domain determination is medication compliance where the system determines whether the user is following a predetermined medication regimen by detecting pill unit opening or closure. The system can also monitor dangerous conditions such as to whether a cooking range or stove has been left on inappropriately by querying mesh network controllers in the cooking range, stove, or cooking appliance. Other systems may include, for example, other potentially harmful appliances such as heaters, irons or electric space heaters.

[0074] The system of sensors the patient monitoring system can determine, for example, whether users are up and about in their homes and whether they are having difficulty managing their medications. It can also be determined whether the user has accidentally left a stove on or has failed to get out of bed a predetermined number of hours after a usual waking time. If the patient monitoring system detects any of these or other problems it can then first page the user on the wearable device such as wrist watch to provide a reminder about the medications, stove, or other detected problems. If the patient does not respond, the system elevates the issue to the authorized third party **210**.

[0075] The system can track the activities of the patient and distribute specialized gerontological daily activity summary reports to users, family members, case managers, physicians and others. It also makes it possible to collect and act upon the designated priority information which may indicate immediate problems for the user. The system can generate periodic reports which may include collections, compilations and arrangements of information on any or all of the monitored activities within the user's living area. These electronic records may be used in combination with any other information to produce any type of periodic activity reports desired on the user being monitored. These user activity reports may be used by a professional case manager or a designated family member to determine if the user is experiencing problems with specific activities of daily living. Thus these problems may be dealt with before they become a threat to the continued well being of the user and the ability of the user to live independently. Furthermore, in addition to providing remote case monitoring and in-home reminders, the patient monitoring system may be programmed to take corrective actions when certain problems are detected. A social worker, health professional or designated family member can query the base station **20** or can respond to the transmitted information according to a predetermined protocol.

[0076] The system can provide case management that may monitor approximately a plurality of distributed clients. The system can receive information from the distributed patient monitoring systems on an immediate basis or at predetermined time intervals. For example, the remote case monitoring system may receive information on an hourly, daily or weekly basis. If the patient's local base station **20** determines that a potential problem exists, the base station **20** forwards the request to the server **200** running the case management software, and this event may be brought to the immediate attention of the human case monitor at a call center, for example, by means of a computer screen. The remote case manager may examine individual case and data records for the client being monitored to learn the predetermined response for the monitored person when the reported event occurs. Likely interventions required of personnel at the case management site may include calling a local case manager, a hospital social worker or a local next of kin. Other actions the remote case monitor may execute include calling the user, remotely downloading the last twenty-four or forty-eight

hours worth of event summary information from the local patient monitoring system and remotely initiating a diagnostic sequence on the local patient monitoring system. The protocol of procedures for intervention by the remote case monitor may differ from one remote case monitor system to another and from one user to another. It is anticipated in the preferred embodiment of the invention that various intervention decisions such as who to call when predetermined events occur and what messages to deliver may be carried out by a machine intelligence expert system (not shown) at the remote case monitoring system or by a person or a combination of both. The local patient monitoring system may also be programmed to carry out such decisions as who to call when appropriate. For example, the patient monitoring system may have a contact list of people to contact in various emergencies. In addition to receiving and interpreting data indicating the need for intervention in event of emergencies, the remote case monitoring software on the server **200** routinely receives downloaded data from individual patient monitoring systems **20** at predetermined intervals. This data is interpreted on the individual and aggregate level by means of trend analysis software which detects larger than statistically normal deviations from event pattern measurements. The remote case monitoring system on the server **200** may use this analysis to produce periodic summary reports of events relating to everyday living tasks in the home environment of the user. More specifically these reports may be used to detect certain event classes, to weight them in terms of their relative importance and to compare them with baselines of task performance. The events weighed with respect to their importance may include getting out of bed, managing medication, the proper control of a stove, the proper control of water flow, and the proper control of selected electrical appliances. Based upon the reports of these events, gerontological living summary reports may be prepared in machine form and paper form at the remote case management software for distribution to predesignated parties involved in the case management of the patient. These parties may include the users themselves, relatives of the user, case manager social workers, physicians and other appropriate formal and informal providers. The system can produce trend analysis reports which show the frequency of occurrence of different events over a predetermined time period such as six months. Thus the trend analysis report might show that over the course of six months the user became increasingly noncompliant with medications and/or increasingly likely to leave the stove on inappropriately. Using a known trend analysis technique, software driven reports can detect increasing frequencies of problems of every day activities. The trend analysis report may be a monthly paper or machine report which provides several indicators of performance on different areas of everyday living monitored by the patient monitoring system. These areas may include waking and sleeping, medication management, stove management, water flow management and the operation of additional appliances. The raw data for this report is based on the event log data transferred from the base station **20** or the server **200** using standard data transfer and priority specific modes. The trend analysis report can plot deviations in behavior indicating changes in plot trend. For example, the trend analysis report can plot waking and sleeping hours and the number of times a user goes to the bathroom. While none of this in itself indicates a situation requiring intervention, sudden changes in sleep habits, bathroom use, even appliance use may indicate sudden changes in health or cognitive well being requiring a relative or a case management social worker or case management social worker or a physician to visit or interview the user. While any number of combinations of interpreted data can be used in any number of specialized reports, it is anticipated that most case management sites and most relatives would want to know the frequency and severity of specific errors, the extent and accuracy of medication compliance and whether a waking or sleeping pattern of a user is changing radically. The trend analysis report provides case managers and relatives with this information and enables them to better help the user by locating subtle changes in behavior patterns, monitoring various kinds of potentially dangerous errors and keeping a record of baseline functioning in relation to monitored activities.

[0077] For patients whose safety concerns outweigh privacy issue, a plurality of monitoring cameras **10** may optionally be placed in various predetermined positions in a home of a patient **30**. The cameras **10** can be wired or wireless. For example, the cameras can communicate over infrared links or over radio links conforming to the 802X (e.g. 802.11A, 802.11B, 802.11G, 802.15) standard or the Bluetooth standard to a base station/server **20** may communicate over various communication links, such as a direct connection, such a serial connection, USB connection, Firewire connection or may be optically based, such as infrared or wireless based, for example, home RF, IEEE standard 802.11a/b, Bluetooth or the like. In one embodiment, appliances **8** monitor the patient and activates the camera **10** to capture and transmit video to an authorized third party for providing assistance should the appliance **8** detects that the user needs assistance or that an emergency had occurred.

[0078] The base station/server **20** stores the patient's ambulation pattern and vital parameters and can be accessed by the patient's family members (sons/daughters), physicians, caretakers, nurses, hospitals, and elderly community. The base station/server **20** may communicate with the remote server **200** by DSL, T-1 connection over a private communication network or a public information network, such as the Internet **100**, among others.

[0079] The patient **30** may wear one or more wearable patient monitoring appliances such as wrist-watches or clip on devices or electronic jewelry to monitor the patient. One wearable appliance such as a wrist-watch includes sensors **40**, for example devices for sensing ECG, EKG, blood pressure, sugar level, among others. In one embodiment, the sensors **40** are mounted on the patient's wrist (such as a wristwatch sensor) and other convenient anatomical locations. Exemplary sensors **40** include standard medical diagnostics for detecting the body's electrical signals emanating from muscles (EMG and EOG) and brain (EEG) and cardiovascular system (ECG). Leg sensors can include piezoelectric accelerometers designed to give qualitative assessment of limb movement. Additionally, thoracic and abdominal bands used to measure expansion and contraction of the thorax and abdomen respectively. A small sensor can be mounted on the subject's finger in order to detect blood-oxygen levels and pulse rate. Additionally, a microphone can be attached to throat and used in sleep diagnostic recordings for detecting breathing and other noise. One or more position sensors can be used for detecting orientation of body (lying on left side, right side or back) during sleep diagnostic recordings. Each of sensors **40** can individually transmit data to the server **20** using wired or wireless transmission. Alternatively, all sensors **40** can be fed through a common bus into a single trans-

ceiver for wired or wireless transmission. The transmission can be done using a magnetic medium such as a floppy disk or a flash memory card, or can be done using infrared or radio network link, among others. The sensor **40** can also include an indoor positioning system or alternatively a global position system (GPS) receiver that relays the position and ambulatory patterns of the patient to the server **20** for mobility tracking.

[0080] In one embodiment, the sensors **40** for monitoring vital signs are enclosed in a wrist-watch sized case supported on a wrist band. The sensors can be attached to the back of the case. For example, in one embodiment, Cygnus' AutoSensor (Redwood City, Calif.) is used as a glucose sensor. A low electric current pulls glucose through the skin. Glucose is accumulated in two gel collection discs in the AutoSensor. The AutoSensor measures the glucose and a reading is displayed by the watch.

[0081] In another embodiment, EKG/ECG contact points are positioned on the back of the wrist-watch case. In yet another embodiment that provides continuous, beat-to-beat wrist arterial pulse rate measurements, a pressure sensor is housed in a casing with a 'free-floating' plunger as the sensor applanates the radial artery. A strap provides a constant force for effective applanation and ensuring the position of the sensor housing to remain constant after any wrist movements. The change in the electrical signals due to change in pressure is detected as a result of the piezoresistive nature of the sensor are then analyzed to arrive at various arterial pressure, systolic pressure, diastolic pressure, time indices, and other blood pressure parameters.

[0082] The case may be of a number of variations of shape but can be conveniently made a rectangular, approaching a box-like configuration. The wrist-band can be an expansion band or a wristwatch strap of plastic, leather or woven material. The wrist-band further contains an antenna for transmitting or receiving radio frequency signals. The wristband and the antenna inside the band are mechanically coupled to the top and bottom sides of the wrist-watch housing. Further, the antenna is electrically coupled to a radio frequency transmitter and receiver for wireless communications with another computer or another user. Although a wrist-band is disclosed, a number of substitutes may be used, including a belt, a ring holder, a brace, or a bracelet, among other suitable substitutes known to one skilled in the art. The housing contains the processor and associated peripherals to provide the human-machine interface. A display is located on the front section of the housing. A speaker, a microphone, and a plurality of push-button switches and are also located on the front section of housing. An infrared LED transmitter and an infrared LED receiver are positioned on the right side of housing to enable the watch to communicate with another computer using infrared transmission.

[0083] In another embodiment, the sensors **40** are mounted on the patient's clothing. For example, sensors can be woven into a single-piece garment (an undershirt) on a weaving machine. A plastic optical fiber can be integrated into the structure during the fabric production process without any discontinuities at the armhole or the seams. An interconnection technology transmits information from (and to) sensors mounted at any location on the body thus creating a flexible "bus" structure. T-Connectors—similar to "button clips" used in clothing—are attached to the fibers that serve as a data bus to carry the information from the sensors (e.g., EKG sensors) on the body. The sensors will plug into these connectors and at the other end similar T-Connectors will be used to transmit the information to monitoring equipment or personal status monitor. Since shapes and sizes of humans will be different, sensors can be positioned on the right locations for all patients and without any constraints being imposed by the clothing. Moreover, the clothing can be laundered without any damage to the sensors themselves. In addition to the fiber optic and specialty fibers that serve as sensors and data bus to carry sensory information from the wearer to the monitoring devices, sensors for monitoring the respiration rate can be integrated into the structure.

[0084] In another embodiment, instead of being mounted on the patient, the sensors can be mounted on fixed surfaces such as walls or tables, for example. One such sensor is a motion detector. Another sensor is a proximity sensor. The fixed sensors can operate alone or in conjunction with the cameras **10**. In one embodiment where the motion detector operates with the cameras **10**, the motion detector can be used to trigger camera recording. Thus, as long as motion is sensed, images from the cameras **10** are not saved. However, when motion is not detected, the images are stored and an alarm may be generated. In another embodiment where the motion detector operates stand alone, when no motion is sensed, the system generates an alarm.

[0085] The server **20** also executes one or more software modules to analyze data from the patient. A module **50** monitors the patient's vital signs such as ECG/EKG and generates warnings should problems occur. In this module, vital signs can be collected and communicated to the server **20** using wired or wireless transmitters. In one embodiment, the server **20** feeds the data to a statistical analyzer such as a neural network which has been trained to flag potentially dangerous conditions. The neural network can be a back-propagation neural network, for example. In this embodiment, the statistical analyzer is trained with training data where certain signals are determined to be undesirable for the patient, given his age, weight, and physical limitations, among others. For example, the patient's glucose level should be within a well established range, and any value outside of this range is flagged by the statistical analyzer as a dangerous condition. As used herein, the dangerous condition can be specified as an event or a pattern that can cause physiological or psychological damage to the patient. Moreover, interactions between different vital signals can be accounted for so that the statistical analyzer can take into consideration instances where individually the vital signs are acceptable, but in certain combinations, the vital signs can indicate potentially dangerous conditions. Once trained, the data received by the server **20** can be appropriately scaled and processed by the statistical analyzer. In addition to statistical analyzers, the server **20** can process vital signs using rule-based inference engines, fuzzy logic, as well as conventional if-then logic. Additionally, the server can process vital signs using Hidden Markov Models (HMMs), dynamic time warping, or template matching, among others. In the HMM embodiment, user activities are automatically classified and any variance from the usual pattern is flagged for monitoring by the authorized third party **210**. In another embodiment, a Bayesian network is used to analyze and automatically build user ambulatory patterns to check if the user is not acting "normally."

[0086] As shown in FIG. **3**, pseudo-code for one embodiment of a pattern recognizer to assist the patient is as follows:

[0087] Build pattern of daily activities

[0088] Do

- **[0089]** Detect if the user's daily activities are within a predetermined threshold of normal activities
- **[0090]** Check that medication cabinet has been accessed on daily basis
- **[0091]** Check door/window is closed in the evening unless specified in advance
- **[0092]** Check that bathroom is not flooded
- **[0093]** Check that patient is not in bathroom for excessive amounts of time
- **[0094]** Check patient toilet for potential disease
- **[0095]** Check for normal usage of exercise equipment in accordance with doctor recommendations
- **[0096]** Check kitchen appliances to minimize risks of fire or flooding hazard
- **[0097]** Check cloth washer/dryer for usage activity
- **[0098]** Check refrigerator activity
- **[0099]** Check backyard motion sensor for intrusion and/or assistance that may be required if the user is injured in the backyard
- **[0100]** Check thermostat and heater/AC for temperature setting
- **[0101]** Check sleeping activities
- **[0102]** Check eating activities
- **[0103]** Check weight
- **[0104]** Check TV viewing or radio listening or computer usage habit
- **[0105]** Check traversing speed on stair
- **[0106]** If abnormality is detected, request assistance from authorized third party
- **[0107]** Update daily activity data structure
- **[0108]** Generate periodic summary/report/recommendations to person and authorized third parties

[0109] Loop

[0110] Through various software modules **50-80**, the system monitors the behavioral patterns of the patient and can intervene if necessary. For example, the system can detect that the oven is on for an excessive amount of time and can turn off the oven using commands communicated over the mesh network. Authorized users **210** can see a display of the patient's activities on the screen using data securely transmitted over the Internet from the base station **20**.

[0111] FIG. **4** shows an exemplary process to monitor a person. First, the process captures and transmits the person's daily activities over a wireless mesh network. The process determines a pattern associated with the person's daily activities. Next, the person or patient attaches a housing having one or more bioelectric contacts coupleable to the person, the housing selected from one of: a patch, a wristwatch, a band, a wristband, a chest band, a leg band, a sock, a glove, a foot pad, a head-band, an ear-clip, an ear phone, a shower-cap, an armband, an ear-ring, eye-glasses, sun-glasses, a belt, a sock, a shirt, a garment, a jewelry, a bed spread, a pillow cover, a pillow, a mattress, a blanket, each having one or more sensors in communication with the wireless mesh network. The system detects a weakness in left half and right half of the person's body; a walking pattern for loss of balance or coordination; requesting hands/feet movement in a predetermined pattern and reading accelerometer output in accordance with the predetermined pattern; checking whether the person experienced dizziness or headache; displaying a text image and asking the person to read back the text image one eye at a time; using a speech recognizer to detect confusion, trouble speaking or understanding; and asking the person if numbness is felt in the body. The process requests assistance from third party **210** if the person's current activity varies from the pattern or if a dangerous condition is detected so that assistance is rendered on a timely basis.

[0112] In one embodiment, data driven analyzers may be used to track the patient's daily living pattern. These data driven analyzers may incorporate a number of models such as parametric statistical models, non-parametric statistical models, clustering models, nearest neighbor models, regression methods, and engineered (artificial) neural networks. Prior to operation, data driven analyzers or models of the patient stoke patterns are built using one or more training sessions. The data used to build the analyzer or model in these sessions are typically referred to as training data. As data driven analyzers are developed by examining only training examples, the selection of the training data can significantly affect the accuracy and the learning speed of the data driven analyzer. One approach used heretofore generates a separate data set referred to as a test set for training purposes. The test set is used to avoid overfitting the model or analyzer to the training data. Overfitting refers to the situation where the analyzer has memorized the training data so well that it fails to fit or categorize unseen data. Typically, during the construction of the analyzer or model, the analyzer's performance is tested against the test set. The selection of the analyzer or model parameters is performed iteratively until the performance of the analyzer in classifying the test set reaches an optimal point. At this point, the training process is completed. An alternative to using an independent training and test set is to use a methodology called cross-validation. Cross-validation can be used to determine parameter values for a parametric analyzer or model for a non-parametric analyzer. In cross-validation, a single training data set is selected. Next, a number of different analyzers or models are built by presenting different parts of the training data as test sets to the analyzers in an iterative process. The parameter or model structure is then determined on the basis of the combined performance of all models or analyzers. Under the cross-validation approach, the analyzer or model is typically retrained with data using the determined optimal model structure.

[0113] In general, multiple dimensions of a user's EEG, EKG, BI, ultrasound, optical, acoustic, electromagnetic, or electrical parameters are encoded as distinct dimensions in a database. A predictive model, including time series models such as those employing autoregression analysis and other standard time series methods, dynamic Bayesian networks and Continuous Time Bayesian Networks, or temporal Bayesian-network representation and reasoning methodology, is built, and then the model, in conjunction with a specific query makes target inferences. Bayesian networks provide not only a graphical, easily interpretable alternative language for expressing background knowledge, but they also provide an inference mechanism; that is, the probability of arbitrary events can be calculated from the model. Intuitively, given a Bayesian network, the task of mining interesting unexpected patterns can be rephrased as discovering item sets in the data which are much more—or much less—frequent than the background knowledge suggests. These cases are provided to a learning and inference subsystem, which constructs a Baye-

sian network that is tailored for a target prediction. The Bayesian network is used to build a cumulative distribution over events of interest.

[0114] In another embodiment, a genetic algorithm (GA) search technique can be used to find approximate solutions to identifying the user daily pattern. Genetic algorithms are a particular class of evolutionary algorithms that use techniques inspired by evolutionary biology such as inheritance, mutation, natural selection, and recombination (or crossover). Genetic algorithms are typically implemented as a computer simulation in which a population of abstract representations (called chromosomes) of candidate solutions (called individuals) to an optimization problem evolves toward better solutions. Traditionally, solutions are represented in binary as strings of 0s and 1s, but different encodings are also possible. The evolution starts from a population of completely random individuals and happens in generations. In each generation, the fitness of the whole population is evaluated, multiple individuals are stochastically selected from the current population (based on their fitness), modified (mutated or recombined) to form a new population, which becomes current in the next iteration of the algorithm.

[0115] Substantially any type of learning system or process may be employed to determine the daily living patterns so that unusual events can be flagged.

[0116] In one embodiment, clustering operations are performed to detect patterns in the data. In another embodiment, a neural network is used to recognize each pattern as the neural network is quite robust at recognizing user habits or patterns. Once the treatment features have been characterized, the neural network then compares the input user information with stored templates of treatment vocabulary known by the neural network recognizer, among others. The recognition models can include a Hidden Markov Model (HMM), a dynamic programming model, a neural network, a fuzzy logic, or a template matcher, among others. These models may be used singly or in combination.

[0117] Dynamic programming considers all possible points within the permitted domain for each value of i. Because the best path from the current point to the next point is independent of what happens beyond that point. Thus, the total cost of [i(k), j(k)] is the cost of the point itself plus the cost of the minimum path to it. Preferably, the values of the predecessors can be kept in an M×N array, and the accumulated cost kept in a 2×N array to contain the accumulated costs of the immediately preceding column and the current column. However, this method requires significant computing resources. For the recognizer to find the optimal time alignment between a sequence of frames and a sequence of node models, it must compare most frames against a plurality of node models. One method of reducing the amount of computation required for dynamic programming is to use pruning. Pruning terminates the dynamic programming of a given portion of user habit information against a given treatment model if the partial probability score for that comparison drops below a given threshold. This greatly reduces computation.

[0118] Considered to be a generalization of dynamic programming, a hidden Markov model is used in the preferred embodiment to evaluate the probability of occurrence of a sequence of observations O(**1**), O(**2**), . . . O(t), . . . , O(T), where each observation O(t) may be either a discrete symbol under the VQ approach or a continuous vector. The sequence of observations may be modeled as a probabilistic function of an underlying Markov chain having state transitions that are not directly observable. In one embodiment, the Markov network is used to model a number of user habits and activities. The transitions between states are represented by a transition matrix A=[a(i,j)]. Each a(i,j) term of the transition matrix is the probability of making a transition to state j given that the model is in state i. The output symbol probability of the model is represented by a set of functions B=[b(j) (O(t)], where the b(j) (O(t) term of the output symbol matrix is the probability of outputting observation O(t), given that the model is in state j. The first state is always constrained to be the initial state for the first time frame of the utterance, as only a prescribed set of left to right state transitions are possible. A predetermined final state is defined from which transitions to other states cannot occur. Transitions are restricted to reentry of a state or entry to one of the next two states. Such transitions are defined in the model as transition probabilities. Although the preferred embodiment restricts the flow graphs to the present state or to the next two states, one skilled in the art can build an HMM model without any transition restrictions, although the sum of all the probabilities of transitioning from any state must still add up to one. In each state of the model, the current feature frame may be identified with one of a set of predefined output symbols or may be labeled probabilistically. In this case, the output symbol probability b(j) O(t) corresponds to the probability assigned by the model that the feature frame symbol is O(t). The model arrangement is a matrix A=[a(i,j)] of transition probabilities and a technique of computing B=b (j) O(t), the feature frame symbol probability in state j. The Markov model is formed for a reference pattern from a plurality of sequences of training patterns and the output symbol probabilities are multivariate Gaussian function probability densities. The patient habit information is processed by a feature extractor. During learning, the resulting feature vector series is processed by a parameter estimator, whose output is provided to the hidden Markov model. The hidden Markov model is used to derive a set of reference pattern templates, each template representative of an identified pattern in a vocabulary set of reference treatment patterns. The Markov model reference templates are next utilized to classify a sequence of observations into one of the reference patterns based on the probability of generating the observations from each Markov model reference pattern template. During recognition, the unknown pattern can then be identified as the reference pattern with the highest probability in the likelihood calculator. The HMM template has a number of states, each having a discrete value. However, because treatment pattern features may have a dynamic pattern in contrast to a single value. The addition of a neural network at the front end of the HMM in an embodiment provides the capability of representing states with dynamic values. The input layer of the neural network comprises input neurons. The outputs of the input layer are distributed to all neurons in the middle layer. Similarly, the outputs of the middle layer are distributed to all output states, which normally would be the output layer of the neuron. However, each output has transition probabilities to itself or to the next outputs, thus forming a modified HMM. Each state of the thus formed HMM is capable of responding to a particular dynamic signal, resulting in a more robust HMM. Alternatively, the neural network can be used alone without resorting to the transition probabilities of the HMM architecture.

[0119] For one embodiment with video monitoring, the system reads video sequence and generates a 3D anatomy file

out of the sequence. The proper bone and muscle scene structure are created for head and face. A based profile stock phase shape will be created by this scene structure. Every scene will then be normalized to a standardized viewport.

[0120] A module **52** monitors the patient ambulatory pattern and generates warnings should the patient's patterns indicate that the patient has fallen or is likely to fall. 3D detection is used to monitor the patient's ambulation. In the 3D detection process, by putting 3 or more known coordinate objects in a scene, camera origin, view direction and up vector can be calculated and the 3D space that each camera views can be defined.

[0121] In one embodiment with two or more cameras, camera parameters (e.g. field of view) are preset to fixed numbers. Each pixel from each camera maps to a cone space. The system identifies one or more 3D feature points (such as a birthmark or an identifiable body landmark) on the patient. The 3D feature point can be detected by identifying the same point from two or more different angles. By determining the intersection for the two or more cones, the system determines the position of the feature point. The above process can be extended to certain feature curves and surfaces, e.g. straight lines, arcs; flat surfaces, cylindrical surfaces. Thus, the system can detect curves if a feature curve is known as a straight line or arc. Additionally, the system can detect surfaces if a feature surface is known as a flat or cylindrical surface. The further the patient is from the camera, the lower the accuracy of the feature point determination. Also, the presence of more cameras would lead to more correlation data for increased accuracy in feature point determination. When correlated feature points, curves and surfaces are detected, the remaining surfaces are detected by texture matching and shading changes. Predetermined constraints are applied based on silhouette curves from different views. A different constraint can be applied when one part of the patient is occluded by another object. Further, as the system knows what basic organic shape it is detecting, the basic profile can be applied and adjusted in the process.

[0122] In a single camera embodiment, the 3D feature point (e.g. a birth mark) can be detected if the system can identify the same point from two frames. The relative motion from the two frames should be small but detectable. Other features curves and surfaces will be detected correspondingly, but can be tessellated or sampled to generate more feature points. A transformation matrix is calculated between a set of feature points from the first frame to a set of feature points from the second frame. When correlated feature points, curves and surfaces are detected, the rest of the surfaces will be detected by texture matching and shading changes.

[0123] Each camera exists in a sphere coordinate system where the sphere origin (0,0,0) is defined as the position of the camera. The system detects theta and phi for each observed object, but not the radius or size of the object. The radius is approximated by detecting the size of known objects and scaling the size of known objects to the object whose size is to be determined. For example, to detect the position of a ball that is 10 cm in radius, the system detects the ball and scales other features based on the known ball size. For human, features that are known in advance include head size and leg length, among others. Surface texture can also be detected, but the light and shade information from different camera views is removed. In either single or multiple camera embodiments, depending on frame rate and picture resolution, certain undetected areas such as holes can exist. For example, if the patient yawns, the patient's mouth can appear as a hole in an image. For 3D modeling purposes, the hole can be filled by blending neighborhood surfaces. The blended surfaces are behind the visible line.

[0124] A module monitors patient activity and generates a warning if the patient has fallen. In one implementation, the system detects the speed of center of mass movement. If the center of mass movement is zero for a predetermined period, the patient is either sleeping or unconscious. The system then attempts to signal the patient and receive confirmatory signals indicating that the patient is conscious. If patient does not confirm, then the system generates an alarm. For example, if the patient has fallen, the system would generate an alarm signal that can be sent to friends, relatives or neighbors of the patient. Alternatively, a third party such as a call center can monitor the alarm signal. Besides monitoring for falls, the system performs video analysis of the patient. For example, during a particular day, the system can determine the amount of time for exercise, sleep, and entertainment, among others. The network of sensors in a patient's home can recognize ordinary patterns—such as eating, sleeping, and greeting visitors—and to alert caretakers to out-of-the-ordinary ones—such as prolonged inactivity or absence. For instance, if the patient goes into the bathroom then disappears off the sensor for 13 minutes and don't show up anywhere else in the house, the system infers that the patient had taken a bath or a shower. However, if a person falls and remains motionless for a predetermined period, the system would record the event and notify a designated person to get assistance.

[0125] Through a video viewing module, a police officer, a security agent, or a healthcare agent such as a physician at a remote location can engage, in interactive visual communication with the patient. The patient's health data or audio-visual signal can be remotely accessed. The patient also has access to a video transmission of the third party. Should the patient experience health symptoms requiring intervention and immediate care, the health care practitioner at the central station may summon help from an emergency services provider. The emergency services provider may send an ambulance, fire department personnel, family member, or other emergency personnel to the patient's remote location. The emergency services provider may, perhaps, be an ambulance facility, a police station, the local fire department, or any suitable support facility.

[0126] Communication between the patient's remote location and the central station can be initiated by a variety of techniques. One method is by manually or automatically placing a call on the telephone to the patient's home or from the patient's home to the central station.

[0127] Alternatively, the system can ask a confirmatory question to the patient through text to speech software. The patient can be orally instructed by the health practitioner to conduct specific physical activities such as specific arm movements, walking, bending, among others. The examination begins during the initial conversation with the monitored subject. Any changes in the spontaneous gestures of the body, arms and hands during speech as well as the fulfillment of nonspecific tasks are important signs of possible pathological events. The monitoring person can instruct the monitored subject to perform a series of simple tasks which can be used for diagnosis of neurological abnormalities. These observations may yield early indicators of the onset of a disease.

[0128] A network **100** such as the Internet receives data from the base station server **20** and passes the data to one or

more remote servers **200**. The images are transmitted from the server **200** over a secure communication link such as virtual private network (VPN) to the remote server(s) **200**.

[0129] In one embodiment where cameras are deployed, the server **200** collects data from a plurality of cameras and uses the 3D images technology to determine if the patient needs help. The system can transmit video (live or archived) to the friend, relative, neighbor, or call center for human review. At each viewer site, after a viewer specifies the correct URL to the client browser computer, a connection with the server **200** is established and user identity authenticated using suitable password or other security mechanisms. The server **200** then retrieves the document from its local disk or cache memory storage and transmits the content over the network. In the typical scenario, the user of a Web browser requests that a media stream file be downloaded, such as sending, in particular, the URL of a media redirection file from a Web server. The media redirection file (MRF) is a type of specialized Hypertext Markup Language (HTML) file that contains instructions for how to locate the multimedia file and in what format the multimedia file is in. The Web server returns the MRF file to the user's browser program. The browser program then reads the MRF file to determine the location of the media server containing one or more multimedia content files. The browser then launches the associated media player application program and passes the MRF file to it. The media player reads the MRF file to obtain the information needed to open a connection to a media server, such as a URL, and the required protocol information, depending upon the type of medial content is in the file. The streaming media content file is then routed from the media server down to the user.

[0130] In the camera embodiment, the transactions between the server **200** and one of the remote servers **200** are detailed. The server **200** compares one image frame to the next image frame. If no difference exists, the duplicate frame is deleted to minimize storage space. If a difference exists, only the difference information is stored as described in the JPEG standard. This operation effectively compresses video information so that the camera images can be transmitted even at telephone modem speed of 64 k or less. More aggressive compression techniques can be used. For example, patient movements can be clusterized into a group of known motion vectors, and patient movements can be described using a set of vectors. Only the vector data is saved. During view back, each vector is translated into a picture object which is suitably rasterized. The information can also be compressed as motion information.

[0131] Next, the server **200** transmits the compressed video to the remote server **200**. The server **200** stores and caches the video data so that multiple viewers can view the images at once since the server **200** is connected to a network link such as telephone line modem, cable modem, DSL modem, and ATM transceiver, among others.

[0132] The system also provides a patient interface **90** to assist the patient in easily accessing information. In one embodiment, the patient interface includes a touch screen; voice-activated text reading; one touch telephone dialing; and video conferencing. The touch screen has large icons that are pre-selected to the patient's needs, such as his or her favorite web sites or application programs. The voice activated text reading allows a user with poor eye-sight to get information from the patient interface **90**. Buttons with pre-designated dialing numbers, or video conferencing contact information allow the user to call a friend or a healthcare provider quickly.

[0133] In one embodiment, medicine for the patient is tracked using radio frequency identification (RFID) tags. In this embodiment, each drug container is tracked through an RFID tag that is also a drug label. The RF tag is an integrated circuit that is coupled with a mini-antenna to transmit data. The circuit contains memory that stores the identification Code and other pertinent data to be transmitted when the chip is activated or interrogated using radio energy from a reader. A reader consists of an RF antenna, transceiver and a microprocessor. The transceiver sends activation signals to and receives identification data from the tag. The antenna may be enclosed with the reader or located outside the reader as a separate piece. RFID readers communicate directly with the RFID tags and send encrypted usage data over the patient's network to the server **200** and eventually over the Internet **100**. The readers can be built directly into the walls or the cabinet doors.

[0134] In one embodiment, capacitively coupled RFID tags are used. The capacitive RFID tag includes a silicon microprocessor that can store 96 bits of information, including the pharmaceutical manufacturer, drug name, usage instruction and a 40-bit serial number. A conductive carbon ink acts as the tag's antenna and is applied to a paper substrate through conventional printing means. The silicon chip is attached to printed carbon-ink electrodes on the back of a paper label, creating a low-cost, disposable tag that can be integrated on the drug label. The information stored on the drug labels is written in a Medicine Markup Language (MML), which is based on the eXtensible Markup Language (XML). MML would allow all computers to communicate with any computer system in a similar way that Web servers read Hyper Text Markup Language (HTML), the common language used to create Web pages.

[0135] Various arrangements of medication holders and dispensers may be used. For example, the medications within a medication holder may be organized according to the time of day they are taken. In this type of organization medications which are taken at the same time may be loaded together into a single compartment within the medication holder. A plurality of these compartments may be provided. The opening and closing of these compartments may be monitored. Each medication batch (for example morning batch, evening batch) is associated with a code for identification purposes.

[0136] After receiving the medicine container, the patient places the medicine in a medicine cabinet, which is also equipped with a tag reader. This smart cabinet then tracks all medicine stored in it. It can track the medicine taken, how often the medicine is restocked and can let the patient know when a particular medication is about to expire. At this point, the server **20** can order these items automatically. The server **20** also monitors drug compliance, and if the patient does not remove the bottle to dispense medication as prescribed, the server **200** sends a warning to the healthcare provider.

[0137] The base station **20** can determine when user compliance does not conform to a scheduled regimen. After a selected time period, for example, one-half hour, without user compliance, a voice reminder can be sent to a voice enabled wristwatch to remind the user to take medications. These reminders and inquiries may be made with respect to all medications or with respect to specific medications. The base station **20** may also provide specific time scheduled reminders to take medication.

[0138] The database tracks typical arm and leg movements to determine whether the user is experiencing muscle weak-

ness reflective of a stroke. If muscle weakness is detected, the system presents the user with additional tests to confirm the likelihood of a stroke attack. If the information indicates a stroke had occurred, the system stores the time of the stroke detection and calls for emergency assistance to get timely treatment for the stroke. The user's habits and movements can be determined by the system for stroke detection. This is done by tracking location, ambulatory travel vectors and time in a database. If the user typically sleeps between 10 pm to 6 am, the location would reflect that the user's location maps to the bedroom between 10 pm and 6 am. In one exemplary system, the system builds a schedule of the user's activity as follows:

Location	Time Start	Time End	Heart Rate
Bed room	10 pm	6 am	60-80
Gym room	6 am	7 am	90-120
Bath room	7 am	7:30 am	85-120
Dining room	7:30 am	8:45 am	80-90
Home Office	8:45 am	11:30 am	85-100
. . .			
. . .			

[0139] The habit tracking is adaptive in that it gradually adjusts to the user's new habits. If there are sudden changes, the system flags these sudden changes for follow up. For instance, if the user spends three hours in the bathroom, the system prompts the third party (such as a call center) to follow up with the patient to make sure he or she does not need help.

[0140] In one embodiment, data driven analyzers may be used to track the patient's habits. These data driven analyzers may incorporate a number of models such as parametric statistical models, non-parametric statistical models, clustering models, nearest neighbor models, regression methods, and engineered (artificial) neural networks. Prior to operation, data driven analyzers or models of the patient's habits or ambulation patterns are built using one or more training sessions. The data used to build the analyzer or model in these sessions are typically referred to as training data. As data driven analyzers are developed by examining only training examples, the selection of the training data can significantly affect the accuracy and the learning speed of the data driven analyzer. One approach used heretofore generates a separate data set referred to as a test set for training purposes. The test set is used to avoid overfitting the model or analyzer to the training data. Overfitting refers to the situation where the analyzer has memorized the training data so well that it fails to fit or categorize unseen data. Typically, during the construction of the analyzer or model, the analyzer's performance is tested against the test set. The selection of the analyzer or model parameters is performed iteratively until the performance of the analyzer in classifying the test set reaches an optimal point. At this point, the training process is completed. An alternative to using an independent training and test set is to use a methodology called cross-validation. Cross-validation can be used to determine parameter values for a parametric analyzer or model for a non-parametric analyzer. In cross-validation, a single training data set is selected. Next, a number of different analyzers or models are built by presenting different parts of the training data as test sets to the analyzers in an iterative process. The parameter or model structure is then determined on the basis of the combined performance of all models or analyzers. Under the cross-validation approach, the analyzer or model is typically retrained with data using the determined optimal model structure.

[0141] In general, multiple dimensions of a user's daily activities such as start and stop times of interactions of different interactions are encoded as distinct dimensions in a database. A predictive model, including time series models such as those employing autoregression analysis and other standard time series methods, dynamic Bayesian networks and Continuous Time Bayesian Networks, or temporal Bayesian-network representation and reasoning methodology, is built, and then the model, in conjunction with a specific query makes target inferences.

[0142] Bayesian networks provide not only a graphical, easily interpretable alternative language for expressing background knowledge, but they also provide an inference mechanism; that is, the probability of arbitrary events can be calculated from the model. Intuitively, given a Bayesian network, the task of mining interesting unexpected patterns can be rephrased as discovering item sets in the data which are much more—or much less—frequent than the background knowledge suggests. These cases are provided to a learning and inference subsystem, which constructs a Bayesian network that is tailored for a target prediction. The Bayesian network is used to build a cumulative distribution over events of interest.

[0143] In another embodiment, a genetic algorithm (GA) search technique can be used to find approximate solutions to identifying the user's habits. Genetic algorithms are a particular class of evolutionary algorithms that use techniques inspired by evolutionary biology such as inheritance, mutation, natural selection, and recombination (or crossover). Genetic algorithms are typically implemented as a computer simulation in which a population of abstract representations (called chromosomes) of candidate solutions (called individuals) to an optimization problem evolves toward better solutions. Traditionally, solutions are represented in binary as strings of 0s and 1s, but different encodings are also possible. The evolution starts from a population of completely random individuals and happens in generations. In each generation, the fitness of the whole population is evaluated, multiple individuals are stochastically selected from the current population (based on their fitness), modified (mutated or recombined) to form a new population, which becomes current in the next iteration of the algorithm.

[0144] Substantially any type of learning system or process may be employed to determine the user's ambulatory and living patterns so that unusual events can be flagged.

[0145] In one embodiment, clustering operations are performed to detect patterns in the data. In another embodiment, a neural network is used to recognize each pattern as the neural network is quite robust at recognizing user habits or patterns. Once the treatment features have been characterized, the neural network then compares the input user information with stored templates of treatment vocabulary known by the neural network recognizer, among others. The recognition models can include a Hidden Markov Model (HMM), a dynamic programming model, a neural network, a fuzzy logic, or a template matcher, among others. These models may be used singly or in combination.

[0146] Dynamic programming considers all possible points within the permitted domain for each value of i. Because the best path from the current point to the next point is independent of what happens beyond that point. Thus, the

total cost of [i(k), j(k)] is the cost of the point itself plus the cost of the minimum path to it. Preferably, the values of the predecessors can be kept in an M×N array, and the accumulated cost kept in a 2×N array to contain the accumulated costs of the immediately preceding column and the current column. However, this method requires significant computing resources. For the recognizer to find the optimal time alignment between a sequence of frames and a sequence of node models, it must compare most frames against a plurality of node models. One method of reducing the amount of computation required for dynamic programming is to use pruning. Pruning terminates the dynamic programming of a given portion of user habit information against a given treatment model if the partial probability score for that comparison drops below a given threshold. This greatly reduces computation.

[0147] Considered to be a generalization of dynamic programming, a hidden Markov model is used in the preferred embodiment to evaluate the probability of occurrence of a sequence of observations O(**1**), O(**2**), . . . O(t), . . . , O(T), where each observation O(t) may be either a discrete symbol under the VQ approach or a continuous vector. The sequence of observations may be modeled as a probabilistic function of an underlying Markov chain having state transitions that are not directly observable. In one embodiment, the Markov network is used to model a number of user habits and activities. The transitions between states are represented by a transition matrix A=[a(i,j)]. Each a(i,j) term of the transition matrix is the probability of making a transition to state j given that the model is in state i. The output symbol probability of the model is represented by a set of functions B=[b(j) (O(t)], where the b(j) (O(t) term of the output symbol matrix is the probability of outputting observation O(t), given that the model is in state j. The first state is always constrained to be the initial state for the first time frame of the utterance, as only a prescribed set of left to right state transitions are possible. A predetermined final state is defined from which transitions to other states cannot occur. Transitions are restricted to reentry of a state or entry to one of the next two states. Such transitions are defined in the model as transition probabilities. Although the preferred embodiment restricts the flow graphs to the present state or to the next two states, one skilled in the art can build an HMM model without any transition restrictions, although the sum of all the probabilities of transitioning from any state must still add up to one. In each state of the model, the current feature frame may be identified with one of a set of predefined output symbols or may be labeled probabilistically. In this case, the output symbol probability b(j) O(t) corresponds to the probability assigned by the model that the feature frame symbol is O(t). The model arrangement is a matrix A=[a(i,j)] of transition probabilities and a technique of computing B=b (j) O(t), the feature frame symbol probability in state j. The Markov model is formed for a reference pattern from a plurality of sequences of training patterns and the output symbol probabilities are multivariate Gaussian function probability densities. The patient habit information is processed by a feature extractor. During learning, the resulting feature vector series is processed by a parameter estimator, whose output is provided to the hidden Markov model. The hidden Markov model is used to derive a set of reference pattern templates, each template representative of an identified pattern in a vocabulary set of reference treatment patterns. The Markov model reference templates are next utilized to classify a sequence of observations into one of the reference patterns based on the probability of generating the observations from each Markov model reference pattern template. During recognition, the unknown pattern can then be identified as the reference pattern with the highest probability in the likelihood calculator. The HMM template has a number of states, each having a discrete value. However, because treatment pattern features may have a dynamic pattern in contrast to a single value. The addition of a neural network at the front end of the HMM in an embodiment provides the capability of representing states with dynamic values. The input layer of the neural network comprises input neurons. The outputs of the input layer are distributed to all neurons in the middle layer. Similarly, the outputs of the middle layer are distributed to all output states, which normally would be the output layer of the neuron. However, each output has transition probabilities to itself or to the next outputs, thus forming a modified HMM. Each state of the thus formed HMM is capable of responding to a particular dynamic signal, resulting in a more robust HMM. Alternatively, the neural network can be used alone without resorting to the transition probabilities of the HMM architecture.

[0148] The system allows patients to conduct a low-cost, comprehensive, real-time monitoring of their vital parameters such as ambulation and falls. Information can be viewed using an Internet-based website, a personal computer, or simply by viewing a display on the monitor. Data measured several times each day provide a relatively comprehensive data set compared to that measured during medical appointments separated by several weeks or even months. This allows both the patient and medical professional to observe trends in the data, such as a gradual increase or decrease in blood pressure, which may indicate a medical condition. The implementation also minimizes effects of white coat syndrome since the monitor automatically makes measurements with basically no discomfort; measurements are made at the patient's home or work, rather than in a medical office.

[0149] In one embodiment, a wearable appliance can be used. The wearable appliance is small, easily worn by the patient during periods of exercise or day-to-day activities, and non-invasively measures blood pressure can be done in a matter of seconds without affecting the patient. An on-board or remote processor can analyze the time-dependent measurements to generate statistics on a patient's blood pressure (e.g., average pressures, standard deviation, beat-to-beat pressure variations) that are not available with conventional devices that only measure systolic and diastolic blood pressure at isolated times.

[0150] The wearable appliance provides an in-depth, cost-effective mechanism to evaluate a patient's health condition. Certain cardiac conditions can be controlled, and in some cases predicted, before they actually occur. Moreover, data from the patient can be collected and analyzed while the patient participates in their normal, day-to-day activities.

[0151] Software programs associated with the Internet-accessible website, secondary software system, and the personal computer analyze the blood pressure, and heart rate, and pulse oximetry values to characterize the patient's cardiac condition. These programs, for example, may provide a report that features statistical analysis of these data to determine averages, data displayed in a graphical format, trends, and comparisons to doctor-recommended values.

[0152] When the appliance cannot communicate with the mesh network, the appliance simply stores information in memory and continues to make measurements. The watch

component automatically transmits all the stored information (along with a time/date stamp) when it comes in proximity to the wireless mesh network, which then transmits the information through the wireless network.

[0153] In one embodiment, the server provides a web services that communicate with third party software through an interface. To generate vital parameters such as blood pressure information for the web services software interface, the patient continuously wears the blood-pressure monitor for a short period of time, e.g. one to two weeks after visiting a medical professional during a typical 'check up' or after signing up for a short-term monitoring program through the website. In this case, the wearable device such as the watch measures mobility through the accelerometer and blood pressure in a near-continuous, periodic manner such as every fifteen minutes. This information is then transmitted over the mesh network to a base station that communicates over the Internet to the server.

[0154] To view information sent from the blood-pressure monitor and fall detector on the wearable appliance, the patient or an authorized third party such as family members, emergency personnel, or medical professional accesses a patient user interface hosted on the web server **200** through the Internet **100** from a remote computer system. The patient interface displays vital information such as ambulation, blood pressure and related data measured from a single patient. The system may also include a call center, typically staffed with medical professionals such as doctors, nurses, or nurse practioners, whom access a care-provider interface hosted on the same website on the server **200**. The care-provider interface displays vital data from multiple patients.

[0155] The wearable appliance has an indoor positioning system and processes these signals to determine a location (e.g., latitude, longitude, and altitude) of the monitor and, presumably, the patient. This location could be plotted on a map by the server, and used to locate a patient during an emergency, e.g. to dispatch an ambulance.

[0156] In one embodiment, the web page hosted by the server **200** includes a header field that lists general information about the patient (e.g. name, age, and ID number, general location, and information concerning recent measurements); a table that lists recently measured blood pressure data and suggested (i.e. doctor-recommended) values of these data; and graphs that plot the systolic and diastolic blood pressure data in a time-dependent manner. The header field additionally includes a series of tabs that each link to separate web pages that include, e.g., tables and graphs corresponding to a different data measured by the wearable device such as calorie consumption/dissipation, ambulation pattern, sleeping pattern, heart rate, pulse oximetry, and temperature. The table lists a series of data fields that show running average values of the patient's daily, monthly, and yearly vital parameters. The levels are compared to a series of corresponding 'suggested' values of vital parameters that are extracted from a database associated with the web site. The suggested values depend on, among other things, the patient's age, sex, and weight. The table then calculates the difference between the running average and suggested values to give the patient an idea of how their data compares to that of a healthy patient. The web software interface may also include security measures such as authentication, authorization, encryption, credential presentation, and digital signature resolution. The interface may also be modified to conform to industry-mandated, XML schema definitions, while being 'backwards compatible' with any existing XML schema definitions.

[0157] The system provides for self-registration of appliances by the user. Data can be synchronized between the Repository and appliance(s) via the base station **20**. The user can preview the readings received from the appliance(s) and reject erroneous readings. The user or treating professional can set up the system to generate alerts against received data, based on pre-defined parameters. The system can determine trends in received data, based on user defined parameters.

[0158] Appliance registration is the process by which a patient monitoring appliance is associated with one or more users of the system. This mechanism is also used when provisioning appliances for a user by a third party, such as a clinician (or their respective delegate). In one implementation, the user (or delegate) logs into the portal to select one or more appliances and available for registration. In turn, the base station server **20** broadcasts a query to all nodes in the mesh network to retrieve identification information for the appliance such as manufacturer information, appliance model information, appliance serial number and optionally a hub number (available on hub packaging). The user may register more than one appliance at this point. The system optionally sets up a service subscription for appliance(s) usage. This includes selecting service plans and providing payment information. The appliance(s) are then associated with this user's account and a control file with appliance identification information is synchronized between the server **200** and the base station **20** and each appliance on initialization. In one embodiment, each appliance **8** transmits data to the base station **20** in an XML format for ease of interfacing and is either kept encrypted or in a non-readable format on the base station **20** for security reasons.

[0159] The base station **20** frequently collects and synchronizes data from the appliances **8**. The base station **20** may use one of various transportation methods to connect to the repository on the server **200** using a PC as conduit or through a connection established using an embedded modem (connected to a phone line), a wireless router (DSL or cable wireless router), a cellular modem, or another network-connected appliance (such as, but not limited to, a web-phone, video-phone, embedded computer, PDA or handheld computer).

[0160] In one embodiment, users may set up alerts or reminders that are triggered when one or more reading meet a certain set of conditions, depending on parameters defined by the user. The user chooses the condition that they would like to be alerted to and by providing the parameters (e.g. threshold value for the reading) for alert generation. Each alert may have an interval which may be either the number of data points or a time duration in units such as hours, days, weeks or months. The user chooses the destination where the alert may be sent. This destination may include the user's portal, e-mail, pager, voice-mail or any combination of the above.

[0161] Trends are determined by applying mathematical and statistical rules (e.g. moving average and deviation) over a set of reading values. Each rule is configurable by parameters that are either automatically calculated or are set by the user.

[0162] The user may give permission to others as needed to read or edit their personal data or receive alerts. The user or clinician could have a list of people that they want to monitor and have it show on their "My Account" page, which serves as

a local central monitoring station in one embodiment. Each person may be assigned different access rights which may be more or less than the access rights that the patient has. For example, a doctor or clinician could be allowed to edit data for example to annotate it, while the patient would have read-only privileges for certain pages. An authorized person could set the reminders and alerts parameters with limited access to others. In one embodiment, the base station server **20** serves a web page customized by the user or the user's representative as the monitoring center that third parties such as family, physicians, or caregivers can log in and access information. In another embodiment, the base station **20** communicates with the server **200** at a call center so that the call center provides all services. In yet another embodiment, a hybrid solution where authorized representatives can log in to the base station server **20** access patient information while the call center logs into both the server **200** and the base station server **20** to provide complete care services to the patient.

[0163] The server **200** may communicate with a business process outsourcing (BPO) company or a call center to provide central monitoring in an environment where a small number of monitoring agents can cost effectively monitor multiple people 24 hours a day. A call center agent, a clinician or a nursing home manager may monitor a group or a number of users via a summary "dashboard" of their readings data, with ability to drill-down into details for the collected data. A clinician administrator may monitor the data for and otherwise administer a number of users of the system. A summary "dashboard" of readings from all Patients assigned to the Administrator is displayed upon log in to the Portal by the Administrator. Readings may be color coded to visually distinguish normal vs. readings that have generated an alert, along with description of the alert generated. The Administrator may drill down into the details for each Patient to further examine the readings data, view charts etc. in a manner similar to the Patient's own use of the system. The Administrator may also view a summary of all the appliances registered to all assigned Patients, including but not limited to all appliance identification information. The Administrator has access only to information about Patients that have been assigned to the Administrator by a Super Administrator. This allows for segmenting the entire population of monitored Patients amongst multiple Administrators. The Super Administrator may assign, remove and/or reassign Patients amongst a number of Administrators.

[0164] In one embodiment, a patient using an Internet-accessible computer and web browser, directs the browser to an appropriate URL and signs up for a service for a short-term (e.g., 1 month) period of time. The company providing the service completes an accompanying financial transaction (e.g. processes a credit card), registers the patient, and ships the patient a wearable appliance for the short period of time. The registration process involves recording the patient's name and contact information, a number associated with the monitor (e.g. a serial number), and setting up a personalized website. The patient then uses the monitor throughout the monitoring period, e.g. while working, sleeping, and exercising. During this time the monitor measures data from the patient and wirelessly transmits it through the channel to a data center. There, the data are analyzed using software running on computer servers to generate a statistical report. The computer servers then automatically send the report to the patient using email, regular mail, or a facsimile machine at different times during the monitoring period. When the monitoring period is expired, the patient ships the wearable appliance back to the monitoring company.

[0165] Different web pages may be designed and accessed depending on the end-user. As described above, individual users have access to web pages that only their ambulation and blood pressure data (i.e., the patient interface), while organizations that support a large number of patients (nursing homes or hospitals) have access to web pages that contain data from a group of patients using a care-provider interface. Other interfaces can also be used with the web site, such as interfaces used for: insurance companies, members of a particular company, clinical trials for pharmaceutical companies, and e-commerce purposes. Vital patient data displayed on these web pages, for example, can be sorted and analyzed depending on the patient's medical history, age, sex, medical condition, and geographic location. The web pages also support a wide range of algorithms that can be used to analyze data once they are extracted from the data packets. For example, an instant message or email can be sent out as an 'alert' in response to blood pressure indicating a medical condition that requires immediate attention. Alternatively, the message could be sent out when a data parameter (e.g. systolic blood pressure) exceeds a predetermined value. In some cases, multiple parameters (e.g., fall detection, positioning data, and blood pressure) can be analyzed simultaneously to generate an alert message. In general, an alert message can be sent out after analyzing one or more data parameters using any type of algorithm. These algorithms range from the relatively simple (e.g., comparing blood pressure to a recommended value) to the complex (e.g., predictive medical diagnoses using 'data mining' techniques). In some cases data may be 'fit' using algorithms such as a linear or non-linear least-squares fitting algorithm.

[0166] In one embodiment, a physician, other health care practitioner, or emergency personnel is provided with access to patient medical information through the server **200**. In one embodiment, if the wearable appliance detects that the patient needs help, or if the patient decides help is needed, the system can call his or her primary care physician. If the patient is unable to access his or her primary care physician (or another practicing physician providing care to the patient) a call from the patient is received, by an answering service or a call center associated with the patient or with the practicing physician. The call center determines whether the patient is exhibiting symptoms of an emergency condition by polling vital patient information generated by the wearable device, and if so, the answering service contacts 911 emergency service or some other emergency service. The call center can review falls information, blood pressure information, and other vital information to determine if the patient is in need of emergency assistance. If it is determined that the patient in not exhibiting symptoms of an emergent condition, the answering service may then determine if the patient is exhibiting symptoms of a non-urgent condition. If the patient is exhibiting symptoms of a non-urgent condition, the answering service will inform the patient that he or she may log into the server **200** for immediate information on treatment of the condition. If the answering service determines that the patient is exhibiting symptoms that are not related to a non-urgent condition, the answering service may refer the patient to an emergency room, a clinic, the practicing physician (when the practicing physician is available) for treatment.

[0167] In another embodiment, the wearable appliance permits direct access to the call center when the user pushes a

switch or button on the appliance, for instance. In one implementation, telephones and switching systems in call centers are integrated with the home mesh network to provide for, among other things, better routing of telephone calls, faster delivery of telephone calls and associated information, and improved service with regard to client satisfaction through computer-telephony integration (CTI). CTI implementations of various design and purpose are implemented both within individual call-centers and, in some cases, at the telephone network level. For example, processors running CTI software applications may be linked to telephone switches, service control points (SCPs), and network entry points within a public or private telephone network. At the call-center level, CTI-enhanced processors, data servers, transaction servers, and the like, are linked to telephone switches and, in some cases, to similar CTI hardware at the network level, often by a dedicated digital link. CTI processors and other hardware within a call-center is commonly referred to as customer premises equipment (CPE). It is the CTI processor and application software is such centers that provides computer enhancement to a call center. In a CTI-enhanced call center, telephones at agent stations are connected to a central telephony switching apparatus, such as an automatic call distributor (ACD) switch or a private branch exchange (PBX). The agent stations may also be equipped with computer terminals such as personal computer/video display unit's (PC/VDU's) so that agents manning such stations may have access to stored data as well as being linked to incoming callers by telephone equipment. Such stations may be interconnected through the PC/VDUs by a local area network (LAN). One or more data or transaction servers may also be connected to the LAN that interconnects agent stations. The LAN is, in turn, typically connected to the CTI processor, which is connected to the call switching apparatus of the call center.

[0168] When a call from a patient arrives at a call center, whether or not the call has been pre-processed at an SCP, the telephone number of the calling line and the medical record are made available to the receiving switch at the call center by the network provider. This service is available by most networks as caller-ID information in one of several formats such as Automatic Number Identification (ANI). Typically the number called is also available through a service such as Dialed Number Identification Service (DNIS). If the call center is computer-enhanced (CTI), the phone number of the calling party may be used as a key to access additional medical and/or historical information from a customer information system (CIS) database at a server on the network that connects the agent workstations. In this manner information pertinent to a call may be provided to an agent, often as a screen pop on the agent's PC/VDU.

[0169] The call center enables any of a first plurality of physician or health care practitioner terminals to be in audio communication over the network with any of a second plurality of patient wearable appliances. The call center will route the call to a physician or other health care practitioner at a physician or health care practitioner terminal and information related to the patient (such as an electronic medical record) will be received at the physician or health care practitioner terminal via the network. The information may be forwarded via a computer or database in the practicing physician's office or by a computer or database associated with the practicing physician, a health care management system or other health care facility or an insurance provider. The physician or health care practitioner is then permitted to assess the patient, to treat the patient accordingly, and to forward updated information related to the patient (such as examination, treatment and prescription details related to the patient's visit to the patient terminal) to the practicing physician via the network **200**.

[0170] In one embodiment, the system informs a patient of a practicing physician of the availability of the web services and referring the patient to the web site upon agreement of the patient. A call from the patient is received at a call center. The call center enables physicians to be in audio communication over the network with any patient wearable appliances, and the call is routed to an available physician at one of the physician so that the available physician may carry on a two-way conversation with the patient. The available physician is permitted to make an assessment of the patient and to treat the patient. The system can forward information related to the patient to a health care management system associated with the physician. The health care management system may be a healthcare management organization, a point of service health care system, or a preferred provider organization. The health care practitioner may be a nurse practitioner or an internist.

[0171] The available health care practitioner can make an assessment of the patient and to conduct an examination of the patient over the network, including optionally by a visual study of the patient. The system can make an assessment in accordance with a protocol. The assessment can be made in accordance with a protocol stored in a database and/or making an assessment in accordance with the protocol may include displaying in real time a relevant segment of the protocol to the available physician. Similarly, permitting the physician to prescribe a treatment may include permitting the physician to refer the patient to a third party for treatment and/or referring the patient to a third party for treatment may include referring the patient to one or more of a primary care physician, specialist, hospital, emergency room, ambulance service or clinic. Referring the patient to a third party may additionally include communicating with the third party via an electronic link included in a relevant segment of a protocol stored in a protocol database resident on a digital storage medium and the electronic link may be a hypertext link. When a treatment is being prescribed by a physician, the system can communicate a prescription over the network to a pharmacy and/or communicating the prescription over the network to the pharmacy may include communicating to the pharmacy instructions to be given to the patient pertaining to the treatment of the patient. Communicating the prescription over the network to the pharmacy may also include communicating the prescription to the pharmacy via a hypertext link included in a relevant segment of a protocol stored in a database resident on a digital storage medium. In accordance with another related embodiment, permitting the physician to conduct the examination may be accomplished under conditions such that the examination is conducted without medical instruments at the patient terminal where the patient is located.

[0172] FIG. **5** shows an exemplary process to monitor patient. First, the process sets up mesh network appliances (**1000**). Next, the process determines patient position using in-door positioning system (**1002**). The process then determines patient movement using accelerometer output (**1004**). Sharp accelerations may be used to indicate fall. Further, the z axis accelerometer changes can indicate the height of the appliance from the floor and if the height is near zero, the

system infers that the patient had fallen. The system can also determine vital parameter including patient heart rate (**1006**). The system determines if patient needs assistance based on in-door position, fall detection and vital parameter (**1008**). If a fall is suspected, the system confirms the fall by communicating with the patient prior to calling a third party such as the patient's physician, nurse, family member, 911, 511, 411, or a paid call center to get assistance for the patient (**1010**). If confirmed or if the patient is non-responsive, the system contacts the third party and sends voice over mesh network to appliance on the patient to allow one or more third parties to talk with the patient (**1012**). If needed, the system calls and/or conferences emergency personnel into the call (**1014**).

[0173] In one embodiment, if the patient is outside of the mesh network range such as when the user is traveling away from his/her home, the system continuously records information into memory until the home mesh network is reached or until the monitoring appliance reaches an internet access point. While the wearable appliance is outside of the mesh network range, the device searches for a cell phone with an expansion card plugged into a cell phone expansion slot such as the SDIO slot. If the wearable appliance detects a cell phone that is mesh network compatible, the wearable appliance communicates with the cell phone and provides information to the server **200** using the cellular connection. In one embodiment, a Zigbee SDIO card from C-guys, Inc., enables device-to-device communications for PDAs and smart phones. C-guys' ZigBee SDIO card includes the company's CG-100 SDIO application interface controller, which is designed to convert an application signal to an SD signal (or vice versa). The ZigBee card can provide signal ranges of up to 10 m in the 2.4 GHz band and data rates of up to 200 kbps. The card has peer-to-peer communications mode and supports direct application to PDAs or any SD supported handheld cell phones. In this embodiment, the PDA or cell phone can provide a GPS position information instead of the indoor position information generated by the mesh network appliances **8**. The cell phone GPS position information, accelerometer information and vital information such as heart rate information is transmitted using the cellular channel to the server **200** for processing as is normal. In another embodiment where the phone works through WiFi (802.11) or WiMAX (802.16) or ultra-wideband protocol instead of the cellular protocol, the wearable appliance can communicate over these protocols using a suitable mesh network interface to the phone. In instances where the wearable appliance is outside of its home base and a dangerous condition such as a fall is detected, the wearable appliance can initiate a distress call to the authorized third party using cellular, WiFi, WiMAX, or UWB protocols as is available.

[0174] FIG. **6** shows a portable embodiment of the present invention where the voice recognizer is housed in a wristwatch. As shown in FIG. **6**, the device includes a wrist-watch sized case **1380** supported on a wrist band **1374**. The case **1380** may be of a number of variations of shape but can be conveniently made a rectangular, approaching a box-like configuration. The wrist-band **1374** can be an expansion band or a wristwatch strap of plastic, leather or woven material. The processor or CPU of the wearable appliance is connected to a radio frequency (RF) transmitter/receiver (such as a Bluetooth device, a Zigbee device, a WiFi device, a WiMAX device, or an 802.X transceiver, among others.

[0175] In one embodiment, the back of the device is a conductive metal electrode **1381** that in conjunction with a second electrode **1383** mounted on the wrist band **1374**, enables differential EKG or ECG to be measured. The electrical signal derived from the electrodes is typically 1 mV peak-peak. In one embodiment where only one electrode **1381** or **1383** is available, an amplification of about 1000 is necessary to render this signal usable for heart rate detection. In the embodiment with electrodes **1381** and **1383** available, a differential amplifier is used to take advantage of the identical common mode signals from the EKG contact points, the common mode noise is automatically cancelled out using a matched differential amplifier. In one embodiment, the differential amplifier is a Texas Instruments INA321 instrumentation amplifier that has matched and balanced integrated gain resistors. This device is specified to operate with a minimum of 2.7V single rail power supply. The INA321 provides a fixed amplification of 5× for the EKG signal. With its CMRR specification of 94 dB extended up to 3 KHz the INA321 rejects the common mode noise signals including the line frequency and its harmonics. The quiescent current of the INA321 is 40 mA and the shut down mode current is less than 1 mA. The amplified EKG signal is internally fed to the on chip analog to digital converter. The ADC samples the EKG signal with a sampling frequency of 512 Hz. Precise sampling period is achieved by triggering the ADC conversions with a timer that is clocked from a 32.768 kHz low frequency crystal oscillator. The sampled EKG waveform contains some amount of super imposed line frequency content. This line frequency noise is removed by digitally filtering the samples. In one implementation, a 17-tap low pass FIR filter with pass band upper frequency of 6 Hz and stop band lower frequency of 30 Hz is implemented in this application. The filter coefficients are scaled to compensate the filter attenuation and provide additional gain for the EKG signal at the filter output. This adds up to a total amplification factor of greater than 1000× for the EKG signal.

[0176] The wrist band **1374** can also contain other electrical devices such as ultrasound transducer, optical transducer or electromagnetic sensors, among others. In one embodiment, the transducer is an ultrasonic transducer that generates and transmits an acoustic wave upon command from the CPU during one period and listens to the echo returns during a subsequent period. In use, the transmitted bursts of sonic energy are scattered by red blood cells flowing through the subject's radial artery, and a portion of the scattered energy is directed back toward the ultrasonic transducer **84**. The time required for the return energy to reach the ultrasonic transducer varies according to the speed of sound in the tissue and according to the depth of the artery. Typical transit times are in the range of 6 to 7 microseconds. The ultrasonic transducer is used to receive the reflected ultrasound energy during the dead times between the successive transmitted bursts. The frequency of the ultrasonic transducer's transmit signal will differ from that of the return signal, because the scattering red blood cells within the radial artery are moving. Thus, the return signal, effectively, is frequency modulated by the blood flow velocity.

[0177] A driving and receiving circuit generates electrical pulses which, when applied to the transducer, produce acoustic energy having a frequency on the order of 8 MHz, a pulse width or duration of approximately 8 microseconds, and a pulse repetition interval (PRI) of approximately 16 μs, although other values of frequency, pulse width, and PRI may be used. In one embodiment, the transducer **84** emits an 8 microsecond pulse, which is followed by an 8 microsecond

"listen" period, every 16 microseconds. The echoes from these pulses are received by the ultrasonic transducer **84** during the listen period. The ultrasonic transducer can be a ceramic piezoelectric device of the type well known in the art, although other types may be substituted.

[0178] An analog signal representative of the Doppler frequency of the echo is received by the transducer and converted to a digital representation by the ADC, and supplied to the CPU for signal processing. Within the CPU, the digitized Doppler frequency is scaled to compute the blood flow velocity within the artery based on the Doppler frequency. Based on the real time the blood flow velocity, the CPU applies the vital model to the corresponding blood flow velocity to produce the estimated blood pressure value.

[0179] Prior to operation, calibration is done using a calibration device and the monitoring device to simultaneously collect blood pressure values (systolic, diastolic pressures) and a corresponding blood flow velocity generated by the monitoring device. The calibration device is attached to the base station and measures systolic and diastolic blood pressure using a cuff-based blood pressure monitoring device that includes a motor-controlled pump and data-processing electronics. While the cuff-based blood pressure monitoring device collects patient data, the transducer collects patient data in parallel and through the watch's radio transmitter, blood flow velocity is sent to the base station for generating a computer model that converts the blood flow velocity information into systolic and diastolic blood pressure values and this information is sent wirelessly from the base station to the watch for display and to a remote server if needed. This process is repeated at a later time (e.g., 15 minutes later) to collect a second set of calibration parameters. In one embodiment, the computer model fits the blood flow velocity to the systolic/diastolic values. In another embodiment, the computer trains a neural network or HMM to recognize the systolic and diastolic blood pressure values.

[0180] After the computer model has been generated, the system is ready for real-time blood pressure monitoring. In an acoustic embodiment, the transducer directs ultrasound at the patient's artery and subsequently listens to the echos therefrom. The echoes are used to determine blood flow, which is fed to the computer model to generate the systolic and diastolic pressure values as well as heart rate value. The CPU's output signal is then converted to a form useful to the user such as a digital or analog display, computer data file, or audible indicator. The output signal can drive a speaker to enable an operator to hear a representation of the Doppler signals and thereby to determine when the transducer is located approximately over the radial artery. The output signal can also be wirelessly sent to a base station for subsequent analysis by a physician, nurse, caregiver, or treating professional. The output signal can also be analyzed for medical attention and medical treatment.

[0181] It is noted that while the above embodiment utilizes a preselected pulse duration of 8 microseconds and pulse repetition interval of 16 microseconds, other acoustic sampling techniques may be used in conjunction with embodiments of the invention. For example, in a second embodiment of the ultrasonic driver and receiver circuit (not shown), the acoustic pulses are range-gated with a more complex implementation of the gate logic. As is well known in the signal processing arts, range-gating is a technique by which the pulse-to-pulse interval is varied based on the receipt of range information from earlier emitted and reflected pulses. Using this technique, the system may be "tuned" to receive echoes falling within a specific temporal window which is chosen based on the range of the echo-producing entity in relation to the acoustic source. The delay time before the gate is turned on determines the depth of the sample volume. The amount of time the gate is activated establishes the axial length of the sample volume. Thus, as the acoustic source (in this case the ultrasonic transducer **84**) is tuned to the echo-producing entity (red blood cells, or arterial walls), the pulse repetition interval is shortened such that the system may obtain more samples per unit time, thereby increasing its resolution. It will be recognized that other acoustic processing techniques may also be used, all of which are considered to be equivalent.

[0182] In one optical embodiment, the transducer can be an optical transducer. The optical transducer can be a light source and a photo-detector embedded in the wrist band portions **1374**. The light source can be light-emitting diodes that generate red (λ~630 nm) and infrared (λ~900 nm) radiation, for example. The light source and the photo-detector are slidably adjustable and can be moved along the wrist band to optimize beam transmission and pick up. As the heart pumps blood through the patient's finger, blood cells absorb and transmit varying amounts of the red and infrared radiation depending on how much oxygen binds to the cells' hemoglobin. The photo-detector detects transmission at the predetermined wavelengths, for example red and infrared wavelengths, and provides the detected transmission to a pulse-oximetry circuit embedded within the wrist-watch. The output of the pulse-oximetry circuit is digitized into a time-dependent optical waveform, which is then sent back to the pulse-oximetry circuit and analyzed to determine the user's vital signs.

[0183] In the electromagnetic sensor embodiment, the wrist band **1374** is a flexible plastic material incorporated with a flexible magnet. The magnet provides a magnetic field, and one or more electrodes similar to electrode **1383** are positioned on the wrist band to measure voltage drops which are proportional to the blood velocity. The electromagnetic embodiment may be mounted on the upper arm of the patient, on the ankle or on the neck where peripheral blood vessels pass through and their blood velocity may be measured with minimal interruptions. The flexible magnet produces a pseudo-uniform (non-gradient) magnetic field. The magnetic field can be normal to the blood flow direction when wrist band **1374** is mounted on the user's wrist or may be a rotative pseudo-uniform magnetic field so that the magnetic field is in a transversal direction in respect to the blood flow direction. The electrode output signals are processed to obtain a differential measurement enhancing the signal to noise ratio. The flow information is derived based on the periodicity of the signals. The decoded signal is filtered over several periods and then analyzed for changes used to estimate artery and vein blood flow. Systemic stroke volume and cardiac output may be calculated from the peripheral SV index value.

[0184] The wrist-band **1374** further contains an antenna **1376** for transmitting or receiving radio frequency signals. The wristband **1374** and the antenna **1376** inside the band are mechanically coupled to the top and bottom sides of the wrist-watch housing **1380**. Further, the antenna **1376** is electrically coupled to a radio frequency transmitter and receiver for wireless communications with another computer or another user. Although a wrist-band is disclosed, a number of substitutes may be used, including a belt, a ring holder, a brace, or a bracelet, among other suitable substitutes known

to one skilled in the art. The housing **1380** contains the processor and associated peripherals to provide the human-machine interface. A display **1382** is located on the front section of the housing **1380**. A speaker **1384**, a microphone **1388**, and a plurality of push-button switches **1386** and **1390** are also located on the front section of housing **1380**.

[0185] The electronic circuitry housed in the watch case **1380** detects adverse conditions such as falls or seizures. In one implementation, the circuitry can recognize speech, namely utterances of spoken words by the user, and converting the utterances into digital signals. The circuitry for detecting and processing speech to be sent from the wristwatch to the base station **20** over the mesh network includes a central processing unit (CPU) connected to a ROM/RAM memory via a bus. The CPU is a preferably low power 16-bit or 32-bit microprocessor and the memory is preferably a high density, low-power RAM. The CPU is coupled via the bus to processor wake-up logic, one or more accelerometers to detect sudden movement in a patient, an ADC **102** which receives speech input from the microphone. The ADC converts the analog signal produced by the microphone into a sequence of digital values representing the amplitude of the signal produced by the microphone at a sequence of evenly spaced times. The CPU is also coupled to a digital to analog (D/A) converter, which drives the speaker to communicate with the user. Speech signals from the microphone are first amplified, pass through an antialiasing filter before being sampled. The front-end processing includes an amplifier, a bandpass filter to avoid antialiasing, and an analog-to-digital (A/D) converter or a CODEC. To minimize space, the ADC, the DAC and the interface for wireless transceiver and switches may be integrated into one integrated circuit to save space. In one embodiment, the wrist watch acts as a walkie-talkie so that voice is received over the mesh network by the base station **20** and then delivered to a call center over the POTS or PSTN network. In another embodiment, voice is provided to the call center using the Internet through suitable VOIP techniques. In one embodiment, speech recognition such as a speech recognizer is discussed in U.S. Pat. No. 6,070,140 by the inventor of the instant invention, the content of which is incorporated by reference.

[0186] In one embodiment, the wireless nodes convert freely available energy inherent in most operating environments into conditioned electrical power. Energy harvesting is defined as the conversion of ambient energy into usable electrical energy. When compared with the energy stored in common storage elements, like batteries and the like, the environment represents a relatively inexhaustible source of energy. Energy harvesters can be based on piezoelectric devices, solar cells or electromagnetic devices that convert mechanical vibrations.

[0187] FIG. **6**B shows an exemplary mesh network working with the wearable appliance of FIG. **6**A. Data collected and communicated on the display **1382** of the watch as well as voice is transmitted to a base station **1390** for communicating over a network to an authorized party **1394**. The watch and the base station is part of a mesh network that may communicate with a medicine cabinet to detect opening or to each medicine container **1391** to detect medication compliance. Other devices include mesh network thermometers, scales, or exercise devices. The mesh network also includes a plurality of home/room appliances **1392-1399**. The ability to transmit voice is useful in the case the patient has fallen down and cannot walk to the base station **1390** to request help. Hence, in one embodiment, the watch captures voice from the user and transmits the voice over the Zigbee mesh network to the base station **1390**. The base station **1390** in turn dials out to an authorized third party to allow voice communication and at the same time transmits the collected patient vital parameter data and identifying information so that help can be dispatched quickly, efficiently and error-free. In one embodiment, the base station **1390** is a POTS telephone base station connected to the wired phone network. In a second embodiment, the base station **1390** can be a cellular telephone connected to a cellular network for voice and data transmission. In a third embodiment, the base station **1390** can be a WiMAX or 802.16 standard base station that can communicate VOIP and data over a wide area network. I one implementation, Zigbee or 802.15 appliances communicate locally and then transmits to the wide area network (WAN) such as the Internet over WiFi or WiMAX. Alternatively, the base station can communicate with the WAN over POTS and a wireless network such as cellular or WiMAX or both.

[0188] One embodiment of FIG. **7** includes bioelectrical impedance (BI) spectroscopy sensors in addition to or as alternates to EKG sensors and heart sound transducer sensors. BI spectroscopy is based on Ohm's Law: current in a circuit is directly proportional to voltage and inversely proportional to resistance in a DC circuit or impedance in an alternating current (AC) circuit. Bioelectric impedance exchanges electrical energy with the patient body or body segment. The exchanged electrical energy can include alternating current and/or voltage and direct current and/or voltage. The exchanged electrical energy can include alternating currents and/or voltages at one or more frequencies. For example, the alternating currents and/or voltages can be provided at one or more frequencies between 100 Hz and 1 MHz, preferably at one or more frequencies between 5 KHz and 250 KHz. A BI instrument operating at the single frequency of 50 KHz reflects primarily the extra cellular water compartment as a very small current passes through the cell. Because low frequency (<1 KHz) current does not penetrate the cells and that complete penetration occurs only at a very high frequency (>1 MHz), multi-frequency BI or bioelectrical impedance spectroscopy devices can be used to scan a wide range of frequencies.

[0189] In a tetrapolar implementation, two electrodes on the wrist watch or wrist band are used to apply AC or DC constant current into the body or body segment. The voltage signal from the surface of the body is measured in terms of impedance using the same or an additional two electrodes on the watch or wrist band. In a bipolar implementation, one electrode on the wrist watch or wrist band is used to apply AC or DC constant current into the body or body segment. The voltage signal from the surface of the body is measured in terms of impedance using the same or an alternative electrode on the watch or wrist band. The system of FIG. **6**B may include a BI patch **1400** that wirelessly communicates BI information with the wrist watch. Other patches **1400** can be used to collect other medical information or vital parameter and communicate with the wrist watch or base station or the information could be relayed through each wireless node or appliance to reach a destination appliance such as the base station, for example. The system of FIG. **6**B can also include a head-cap **1402** that allows a number of EEG probes access to the brain electrical activities, EKG probes to measure cranial EKG activity, as well as BI probes to determine cranial fluid presence indicative of a stroke. As will be discussed

below, the EEG probes allow the system to determine cognitive status of the patient to determine whether a stroke had just occurred, the EKG and the BI probes provide information on the stroke to enable timely treatment to minimize loss of functionality to the patient if treatment is delayed.

[0190] Bipolar or tetrapolar electrode systems can be used in the BI instruments. Of these, the tetrapolar system provides a uniform current density distribution in the body segment and measures impedance with less electrode interface artifact and impedance errors. In the tetrapolar system, a pair of surface electrodes (I**1**, I**2**) is used as current electrodes to introduce a low intensity constant current at high frequency into the body. A pair of electrodes (E**1**, E**2**) measures changes accompanying physiological events. Voltage measured across E**1**-E**2** is directly proportional to the segment electrical impedance of the human subject. Circular flat electrodes as well as band type electrodes can be used. In one embodiment, the electrodes are in direct contact with the skin surface. In other embodiments, the voltage measurements may employ one or more contactless, voltage sensitive electrodes such as inductively or capacitively coupled electrodes. The current application and the voltage measurement electrodess in these embodiments can be the same, adjacent to one another, or at significantly different locations. The electrode(s) can apply current levels from 20 uA to 10 mA rms at a frequency range of 20-100 KHz. A constant current source and high input impedance circuit is used in conjunction with the tetrapolar electrode configuration to avoid the contact pressure effects at the electrode-skin interface.

[0191] The BI sensor can be a Series Model which assumes that there is one conductive path and that the body consists of a series of resistors. An electrical current, injected at a single frequency, is used to measure whole body impedance (i.e., wrist to ankle) for the purpose of estimating total body water and fat free mass. Alternatively, the BI instrument can be a Parallel BI Model In this model of impedance, the resistors and capacitors are oriented both in series and in parallel in the human body. Whole body BI can be used to estimate TBW and FFM in healthy subjects or to estimate intracellular water (ICW) and body cell mass (BCM). High-low BI can be used to estimate extracellular water (ECW) and total body water (TBW). Multi-frequency BI can be used to estimate ECW, ICW, and TBW; to monitor changes in the ECW/BCM and ECW/TBW ratios in clinical populations. The instrument can also be a Segmental BI Model and can be used in the evaluation of regional fluid changes and in monitoring extra cellular water in patients with abnormal fluid distribution, such as those undergoing hemodialysis. Segmental BI can be used to measure fluid distribution or regional fluid accumulation in clinical populations. Upper-body and Lower-body BI can be used to estimate percentage BF in healthy subjects with normal hydration status and fluid distribution. The BI sensor can be used to detect acute dehydration, pulmonary edema (caused by mitral stenosis or left ventricular failure or congestive heart failure, among others), or hyperhydration cause by kidney dialysis, for example. In one embodiment, the system determines the impedance of skin and subcutaneous adipose tissue using tetrapolar and bipolar impedance measurements. In the bipolar arrangement the inner electrodes act both as the electrodes that send the current (outer electrodes in the tetrapolar arrangement) and as receiving electrodes. If the outer two electrodes (electrodes sending current) are superimposed onto the inner electrodes (receiving electrodes) then a bipolar BIA arrangement exists with the same electrodes acting as receiving and sending electrodes. The difference in impedance measurements between the tetrapolar and bipolar arrangement reflects the impedance of skin and subcutaneous fat. The difference between the two impedance measurements represents the combined impedance of skin and subcutaneous tissue at one or more sites. The system determines the resistivities of skin and subcutaneous adipose tissue, and then calculates the skinfold thickness (mainly due to adipose tissue).

[0192] Various BI analysis methods can be used in a variety of clinical applications such as to estimate body composition, to determine total body water, to assess compartmentalization of body fluids, to provide cardiac monitoring, measure blood flow, dehydration, blood loss, wound monitoring, ulcer detection and deep vein thrombosis. Other uses for the BI sensor includes detecting and/or monitoring hypovolemia, hemorrhage or blood loss. The impedance measurements can be made sequentially over a period of in time; and the system can determine whether the subject is externally or internally bleeding based on a change in measured impedance. The watch can also report temperature, heat flux, vasodilation and blood pressure along with the BI information.

[0193] In one embodiment, the BI system monitors cardiac function using impedance cardiography (ICG) technique. ICG provides a single impedance tracing, from which parameters related to the pump function of the heart, such as cardiac output (CO), are estimated. ICG measures the beat-to-beat changes of thoracic bioimpedance via four dual sensors applied on the neck and thorax in order to calculate stroke volume (SV). By using the resistivity ρ of blood and the length L of the chest, the impedance change ΔZ and base impedance (Zo) to the volume change ΔV of the tissue under measurement can be derived as follows:

$$\Delta V = \rho \frac{L^2}{Z_0^2} \Delta Z$$

[0194] In one embodiment, SV is determined as a function of the first derivative of the impedance waveform (dZ/dtmax) and the left ventricular ejection time (LVET)

$$SV = \rho \frac{L^2}{Z_0^2} \left(\frac{dZ}{dt} \right)_{max} LVET$$

[0195] In one embodiment, L is approximated to be 17% of the patient's height (H) to yield the following:

$$SV = \left(\frac{(0.17\ H)^3}{4.2} \right) \frac{\left(\frac{dZ}{dt} \right)_{max}}{Z_0} LVET$$

[0196] In another embodiment, δ or the actual weight divided by the ideal weight is used:

$$SV = \delta \times \left(\frac{(0.17\ H)^3}{4.2} \right) \frac{\left(\frac{dZ}{dt} \right)_{max}}{Z_0} LVET$$

[0197] The impedance cardiographic embodiment allows hemodynamic assessment to be regularly monitored to avoid the occurrence of an acute cardiac episode. The system provides an accurate, noninvasive measurement of cardiac output (CO) monitoring so that ill and surgical patients undergoing major operations such as coronary artery bypass graft (CABG) would benefit. In addition, many patients with chronic and comorbid diseases that ultimately lead to the need for major operations and other costly interventions might benefit from more routine monitoring of CO and its dependent parameters such as systemic vascular resistance (SVR).

[0198] Once SV has been determined, CO can be determined according to the following expression:

$$CO=SV*HR, \text{where } HR=\text{heart rate}$$

[0199] CO can be determined for every heart-beat. Thus, the system can determine SV and CO on a beat-to-beat basis.

[0200] In one embodiment to monitor heart failure, an array of BI sensors are place in proximity to the heart. The array of BI sensors detect the presence or absence, or rate of change, or body fluids proximal to the heart. The BI sensors can be supplemented by the EKG sensors. A normal, healthy, heart beats at a regular rate. Irregular heart beats, known as cardiac arrhythmia, on the other hand, may characterize an unhealthy condition. Another unhealthy condition is known as congestive heart failure ("CHF"). CHF, also known as heart failure, is a condition where the heart has inadequate capacity to pump sufficient blood to meet metabolic demand. CHF may be caused by a variety of sources, including, coronary artery disease, myocardial infarction, high blood pressure, heart valve disease, cardiomyopathy, congenital heart disease, endocarditis, myocarditis, and others. Unhealthy heart conditions may be treated using a cardiac rhythm management (CRM) system. Examples of CRM systems, or pulse generator systems, include defibrillators (including implantable cardioverter defibrillator), pacemakers and other cardiac resynchronization devices.

[0201] In one implementation, BIA measurements can be made using an array of bipolar or tetrapolar electrodes that deliver a constant alternating current at 50 KHz frequency. Whole body measurements can be done using standard right-sided. The ability of any biological tissue to resist a constant electric current depends on the relative proportions of water and electrolytes it contains, and is called resistivity (in Ohms/cm 3). The measuring of bioimpedance to assess congestive heart failure employs the different bio-electric properties of blood and lung tissue to permit separate assessment of: (a) systemic venous congestion via a low frequency or direct current resistance measurement of the current path through the right ventricle, right atrium, superior vena cava, and subclavian vein, or by computing the real component of impedance at a high frequency, and (b) pulmonary congestion via a high frequency measurement of capacitive impedance of the lung. The resistance is impedance measured using direct current or alternating current (AC) which can flow through capacitors.

[0202] In one embodiment, a belt is worn by the patient with a plurality of BI probes positioned around the belt perimeter. The output of the tetrapolar probes is processed using a second-order Newton-Raphson method to estimate the left and right-lung resistivity values in the thoracic geometry. The locations of the electrodes are marked. During the measurements procedure, the belt is worn around the patient's thorax while sitting, and the reference electrode is attached to his waist. The data is collected during tidal respiration to minimize lung resistivity changes due to breathing, and lasts approximately one minute. The process is repeated periodically and the impedance trend is analyzed to detect CHF. Upon detection, the system provides vital parameters to a call center and the call center can refer to a physician for consultation or can call 911 for assistance.

[0203] In one embodiment, an array of noninvasive thoracic electrical bioimpedance monitoring probes can be used alone or in conjunction with other techniques such as impedance cardiography (ICG) for early comprehensive cardiovascular assessment and trending of acute trauma victims. This embodiment provides early, continuous cardiovascular assessment to help identify patients whose injuries were so severe that they were not likely to survive. This included severe blood and/or fluid volume deficits induced by trauma, which did not respond readily to expeditious volume resuscitation and vasopressor therapy. One exemplary system monitors cardiorespiratory variables that served as statistically significant measures of treatment outcomes: Qt, BP, pulse oximetry, and transcutaneous Po2 (Ptco2). A high Qt may not be sustainable in the presence of hypovolemia, acute anemia, pre-existing impaired cardiac function, acute myocardial injury, or coronary ischemia. Thus a fall in Ptco2 could also be interpreted as too high a metabolic demand for a patient's cardiovascular reserve. Too high a metabolic demand may compromise other critical organs. Acute lung injury from hypotension, blunt trauma, and massive fluid resuscitation can drastically reduce respiratory reserve.

[0204] One embodiment that measures thoracic impedance (a resistive or reactive impedance associated with at least a portion of a thorax of a living organism). The thoracic impedance signal is influenced by the patient's thoracic intravascular fluid tension, heart beat, and breathing (also referred to as "respiration" or "ventilation"). A "de" or "baseline" or "low frequency" component of the thoracic impedance signal (e.g., less than a cutoff value that is approximately between 0.1 Hz and 0.5 Hz, inclusive, such as, for example, a cutoff value of approximately 0.1 Hz) provides information about the subject patient's thoracic fluid tension, and is therefore influenced by intravascular fluid shifts to and away from the thorax. Higher frequency components of the thoracic impedance signal are influenced by the patient's breathing (e.g., approximately between 0.05 Hz and 2.0 Hz inclusive) and heartbeat (e.g., approximately between 0.5 Hz and 10 Hz inclusive). A low intravascular fluid tension in the thorax ("thoracic hypotension") may result from changes in posture. For example, in a person who has been in a recumbent position for some time, approximately ⅓ of the blood volume is in the thorax. When that person then sits upright, approximately ⅓ of the blood that was in the thorax migrates to the lower body. This increases thoracic impedance. Approximately 90% of this fluid shift takes place within 2 to 3 minutes after the person sits upright.

[0205] The accelerometer can be used to provide reproducible measurements. Body activity will increase cardiac output and also change the amount of blood in the systemic venous system or lungs. Measurements of congestion may be most reproducible when body activity is at a minimum and the patient is at rest. The use of an accelerometer allows one to sense both body position and body activity. Comparative measurements over time may best be taken under reproducible conditions of body position and activity. Ideally, mea-

surements for the upright position should be compared as among themselves. Likewise measurements in the supine, prone, left lateral decubitus and right lateral decubitus should be compared as among themselves. Other variables can be used to permit reproducible measurements, i.e. variations of the cardiac cycle and variations in the respiratory cycle. The ventricles are at their most compliant during diastole. The end of the diastolic period is marked by the QRS on the electrocardiographic means (EKG) for monitoring the cardiac cycle. The second variable is respiratory variation in impedance, which is used to monitor respiratory rate and volume. As the lungs fill with air during inspiration, impedance increases, and during expiration, impedance decreases. Impedance can be measured during expiration to minimize the effect of breathing on central systemic venous volume. While respiration and CHF both cause variations in impedance, the rates and magnitudes of the impedance variation are different enough to separate out the respiratory variations which have a frequency of about 8 to 60 cycles per minute and congestion changes which take at least several minutes to hours or even days to occur. Also, the magnitude of impedance change is likely to be much greater for congestive changes than for normal respiratory variation. Thus, the system can detect congestive heart failure (CHF) in early stages and alert a patient to prevent disabling and even lethal episodes of CHF. Early treatment can avert progression of the disorder to a dangerous stage.

[0206] In an embodiment to monitor wounds such as diabetic related wounds, the conductivity of a region of the patient with a wound or is susceptible to wound formation is monitored by the system. The system determines healing wounds if the impedance and reactance of the wound region increases as the skin region becomes dry. The system detects infected, open, interrupted healing, or draining wounds through lower regional electric impedances. In yet another embodiment, the bioimpedance sensor can be used to determine body fat. In one embodiment, the BI system determines Total Body Water (TBW) which is an estimate of total hydration level, including intracellular and extracellular water; Intracellular Water (ICW) which is an estimate of the water in active tissue and as a percent of a normal range (near 60% of TBW); Extracellular Water (ECW) which is water in tissues and plasma and as a percent of a normal range (near 40% of TBW); Body Cell Mass (BCM) which is an estimate of total pounds/kg of all active cells; Extracellular Tissue (ECT)/Extracellular Mass (ECM) which is an estimate of the mass of all other non-muscle inactive tissues including ligaments, bone and ECW; Fat Free Mass (FFM)/Lean Body Mass (LBM) which is an estimate of the entire mass that is not fat. It should be available in pounds/kg and may be presented as a percent with a normal range; Fat Mass (FM) which is an estimate of pounds/kg of body fat and percentage body fat; and Phase Angle (PA) which is associated with both nutrition and physical fitness.

[0207] Additional sensors such as thermocouples or thermistors and/or heat flux sensors can also be provided to provide measured values useful in analysis. In general, skin surface temperature will change with changes in blood flow in the vicinity of the skin surface of an organism. Such changes in blood flow can occur for a number of reasons, including thermal regulation, conservation of blood volume, and hormonal changes. In one implementation, skin surface measurements of temperature or heat flux are made in conjunction with hydration monitoring so that such changes in blood flow can be detected and appropriately treated.

[0208] In one embodiment, the patch includes a sound transducer such as a microphone or a piezoelectric transducer to pick up sound produced by bones or joints during movement. If bone surfaces are rough and poorly lubricated, as in an arthritic knee, they will move unevenly against each other, producing a high-frequency, scratching sound. The high-frequency sound from joints is picked up by wide-band acoustic sensor(s) or microphone(s) on a patient's body such as the knee. As the patient flexes and extends their knee, the sensors measure the sound frequency emitted by the knee and correlate the sound to monitor osteoarthritis, for example.

[0209] In another embodiment, the patch includes a Galvanic Skin Response (GSR) sensor. In this sensor, a small current is passed through one of the electrodes into the user's body such as the fingers and the CPU calculates how long it takes for a capacitor to fill up. The length of time the capacitor takes to fill up allows us to calculate the skin resistance: a short time means low resistance while a long time means high resistance. The GSR reflects sweat gland activity and changes in the sympathetic nervous system and measurement variables. Measured from the palm or fingertips, there are changes in the relative conductance of a small electrical current between the electrodes. The activity of the sweat glands in response to sympathetic nervous stimulation (Increased sympathetic activation) results in an increase in the level of conductance. Fear, anger, startle response, orienting response and sexual feelings are all among the emotions which may produce similar GSR responses.

[0210] In yet another embodiment, measurement of lung function such as peak expiratory flow readings is done though a sensor such as Wright's peak flow meter. In another embodiment, a respiratory estimator is provided that avoids the inconvenience of having the patient breathing through the flow sensor. In the respiratory estimator embodiment, heart period data from EKG/ECG is used to extract respiratory detection features. The heart period data is transformed into time-frequency distribution by applying a time-frequency transformation such as short-term Fourier transformation (STFT). Other possible methods are, for example, complex demodulation and wavelet transformation. Next, one or more respiratory detection features may be determined by setting up amplitude modulation of time-frequency plane, among others. The respiratory recognizer first generates a math model that correlates the respiratory detection features with the actual flow readings. The math model can be adaptive based on pre-determined data and on the combination of different features to provide a single estimate of the respiration. The estimator can be based on different mathematical functions, such as a curve fitting approach with linear or polynomical equations, and other types of neural network implementations, non-linear models, fuzzy systems, time series models, and other types of multivariate models capable of transferring and combining the information from several inputs into one estimate. Once the math model has been generated, the respirator estimator provides a real-time flow estimate by receiving EKG/ECG information and applying the information to the math model to compute the respiratory rate. Next, the computation of ventilation uses information on the tidal volume. An estimate of the tidal volume may be derived by utilizing different forms of information on the basis of the heart period signal. For example, the functional organization of the respiratory system has an impact in both

respiratory period and tidal volume. Therefore, given the known relationships between the respiratory period and tidal volume during and transitions to different states, the information inherent in the heart period derived respiratory frequency may be used in providing values of tidal volume. In specific, the tidal volume contains inherent dynamics which may be, after modeling, applied to capture more closely the behavioral dynamics of the tidal volume. Moreover, it appears that the heart period signal, itself, is closely associated with tidal volume and may be therefore used to increase the reliability of deriving information on tidal volume. The accuracy of the tidal volume estimation may be further enhanced by using information on the subjects vital capacity (i.e., the maximal quantity of air that can be contained in the lungs during one breath). The information on vital capacity, as based on physiological measurement or on estimates derived from body measures such as height and weight, may be helpful in estimating tidal volume, since it is likely to reduce the effects of individual differences on the estimated tidal volume. Using information on the vital capacity, the mathematical model may first give values on the percentage of lung capacity in use, which may be then transformed to liters per breath. The optimizing of tidal volume estimation can based on, for example, least squares or other type of fit between the features and actual tidal volume. The minute ventilation may be derived by multiplying respiratory rate (breaths/min) with tidal volume (liters/breath).

[0211] In another embodiment, inductive plethysmography can be used to measure a cross-sectional area of the body by determining the self-inductance of a flexible conductor closely encircling the area to be measured. Since the inductance of a substantially planar conductive loop is well known to vary as, inter alia, the cross-sectional area of the loop, a inductance measurement may be converted into a plethysmographic area determination. Varying loop inductance may be measured by techniques known in the art, such as, e.g., by connecting the loop as the inductance in a variable frequency LC oscillator, the frequency of the oscillator then varying with the cross-sectional area of the loop inductance varies. Oscillator frequency is converted into a digital value, which is then further processed to yield the physiological parameters of interest. Specifically, a flexible conductor measuring a cross-sectional area of the body is closely looped around the area of the body so that the inductance, and the changes in inductance, being measured results from magnetic flux through the cross-sectional area being measured. The inductance thus depends directly on the cross-sectional area being measured, and not indirectly on an area which changes as a result of the factors changing the measured cross-sectional area. Various physiological parameters of medical and research interest may be extracted from repetitive measurements of the areas of various cross-sections of the body. For example, pulmonary function parameters, such as respiration volumes and rates and apneas and their types, may be determined from measurements of, at least, a chest transverse cross-sectional area and also an abdominal transverse cross-sectional area. Cardiac parameters, such central venous pressure, left and right ventricular volumes waveforms, and aortic and carotid artery pressure waveforms, may be extracted from repetitive measurements of transverse cross-sectional areas of the neck and of the chest passing through the heart. Timing measurements can be obtained from concurrent ECG measurements, and less preferably from the carotid pulse signal present in the neck. From the cardiac-related signals, indications of ischemia may be obtained independently of any ECG changes. Ventricular wall ischemia is known to result in paradoxical wall motion during ventricular contraction (the ischemic segment paradoxically "balloons" outward instead of normally contracting inward). Such paradoxical wall motion, and thus indications of cardiac ischemia, may be extracted from chest transverse cross-section area measurements. Left or right ventricular ischemia may be distinguished where paradoxical motion is seen predominantly in left or right ventricular waveforms, respectively. For another example, observations of the onset of contraction in the left and right ventricles separately may be of use in providing feedback to bi-ventricular cardiac pacing devices. For a further example, pulse oximetry determines hemoglobin saturation by measuring the changing infrared optical properties of a finger. This signal may be disambiguated and combined with pulmonary data to yield improved information concerning lung function.

[0212] In one embodiment to monitor and predict stroke attack, a cranial bioimpedance sensor is applied to detect fluids in the brain. The brain tissue can be modeled as an electrical circuit where cells with the lipid bilayer act as capacitors and the intra and extra cellular fluids act as resistors. The opposition to the flow of the electrical current through the cellular fluids is resistance. The system takes 50-kHz single-frequency bioimpedance measurements reflecting the electrical conductivity of brain tissue. The opposition to the flow of the current by the capacitance of lipid bilayer is reactance. In this embodiment, microamps of current at 50 kHz are applied to the electrode system. In one implementation, the electrode system consists of a pair of coaxial electrodes each of which has a current electrode and a voltage sensing electrode. For the measurement of cerebral bioimpedance, one pair of gel current electrodes is placed on closed eyelids and the second pair of voltage electrodes is placed in the suboccipital region projecting towards the foramen magnum. The electrical current passes through the orbital fissures and brain tissue. The drop in voltage is detected by the suboccipital electrodes and then calculated by the processor to bioimpedance values. The bioimpedance value is used to detect brain edema, which is defined as an increase in the water content of cerebral tissue which then leads to an increase in overall brain mass. Two types of brain edema are vasogenic or cytotoxic. Vasogenic edema is a result of increased capillary permeability. Cytotoxic edema reflects the increase of brain water due to an osmotic imbalance between plasma and the brain extracellular fluid. Cerebral edema in brain swelling contributes to the increase in intracranial pressure and an early detection leads to timely stroke intervention.

[0213] In another example, a cranial bioimpedance tomography system constructs brain impedance maps from surface measurements using nonlinear optimization. A nonlinear optimization technique utilizing known and stored constraint values permits reconstruction of a wide range of conductivity values in the tissue. In the nonlinear system, a Jacobian Matrix is renewed for a plurality of iterations. The Jacobian Matrix describes changes in surface voltage that result from changes in conductivity. The Jacobian Matrix stores information relating to the pattern and position of measuring electrodes, and the geometry and conductivity distributions of measurements resulting in a normal case and in an abnormal case. The nonlinear estimation determines the maximum voltage difference in the normal and abnormal cases.

[0214] In one embodiment, an electrode array sensor can include impedance, bio-potential, or electromagnetic field tomography imaging of cranial tissue. The electrode array sensor can be a geometric array of discrete electrodes having an equally-spaced geometry of multiple nodes that are capable of functioning as sense and reference electrodes. In a typical tomography application the electrodes are equally-spaced in a circular configuration. Alternatively, the electrodes can have non-equal spacing and/or can be in rectangular or other configurations in one circuit or multiple circuits. Electrodes can be configured in concentric layers too. Points of extension form multiple nodes that are capable of functioning as an electrical reference. Data from the multiple reference points can be collected to generate a spectrographic composite for monitoring over time.

[0215] The patient's brain cell generates an electromagnetic field of positive or negative polarity, typically in the millivolt range. The sensor measures the electromagnetic field by detecting the difference in potential between one or more test electrodes and a reference electrode. The bio-potential sensor uses signal conditioners or processors to condition the potential signal. In one example, the test electrode and reference electrode are coupled to a signal conditioner/processor that includes a lowpass filter to remove undesired high frequency signal components. The electromagnetic field signal is typically a slowly varying DC voltage signal. The lowpass filter removes undesired alternating current components arising from static discharge, electromagnetic interference, and other sources.

[0216] In one embodiment, the impedance sensor has an electrode structure with annular concentric circles including a central electrode, an intermediate electrode and an outer electrode, all of which are connected to the skin. One electrode is a common electrode and supplies a low frequency signal between this common electrode and another of the three electrodes. An amplifier converts the resulting current into a voltage between the common electrode and another of the three electrodes. A switch switches between a first circuit using the intermediate electrode as the common electrode and a second circuit that uses the outer electrode as a common electrode. The sensor selects depth by controlling the extension of the electric field in the vicinity of the measuring electrodes using the control electrode between the measuring electrodes. The control electrode is actively driven with the same frequency as the measuring electrodes to a signal level taken from one of the measuring electrodes but multiplied by a complex number with real and imaginary parts controlled to attain a desired depth penetration. The controlling field functions in the manner of a field effect transistor in which ionic and polarization effects act upon tissue in the manner of a semiconductor material.

[0217] With multiple groups of electrodes and a capability to measure at a plurality of depths, the system can perform tomographic imaging or measurement, and/or object recognition. In one embodiment, a fast reconstruction technique is used to reduce computation load by utilizing prior information of normal and abnormal tissue conductivity characteristics to estimate tissue condition without requiring full computation of a non-linear inverse solution.

[0218] In another embodiment, the bioimpedance system can be used with electro-encephalograph (EEG) or ERP. Since this embodiment collects signals related to blood flow in the brain, collection can be concentrated in those regions of the brain surface corresponding to blood vessels of interest. A headcap with additional electrodes placed in proximity to regions of the brain surface fed by a blood vessel of interest, such as the medial cerebral artery enables targeted information from the regions of interest to be collected. The headcap can cover the region of the brain surface that is fed by the medial cerebral artery. Other embodiments of the headcap can concentrate electrodes on other regions of the brain surface, such as the region associated with the somatosensory motor cortex. In alternative embodiments, the headcap can cover the skull more completely. Further, such a headcap can include electrodes throughout the cap while concentrating electrodes in a region of interest. Depending upon the particular application, arrays of 1-16 head electrodes may be used, as compared to the International 10/20 system of 19-21 head electrodes generally used in an EEG instrument.

[0219] In one implementation, each amplifier for each EEG channel is a high quality analog amplifier device. Full bandwidth and ultra-low noise amplification are obtained for each electrode. Low pass, high pass, hum notch filters, gain, unblock, calibration and electrode impedance check facilities are included in each amplifier. All 8 channels in one EEG amplifier unit have the same filter, gain, etc. settings. Noise figures of less than 0.1 uV r.m.s. are achieved at the input and optical coupling stages. These figures, coupled with good isolation/common mode rejection result in signal clarity. Nine high pass filter ranges include 0.01 Hz for readiness potential measurement, and 30 Hz for EMG measurement.

[0220] In one embodiment, stimulations to elicit EEG signals are used in two different modes, i.e., auditory clicks and electric pulses to the skin. The stimuli, although concurrent, are at different prime number frequencies to permit separation of different evoked potentials (EPs) and avoid interference. Such concurrent stimulations for EP permit a more rapid, and less costly, examination and provide the patient's responses more quickly. Power spectra of spontaneous EEG, waveshapes of Averaged Evoked Potentials, and extracted measures, such as frequency specific power ratios, can be transmitted to a remote receiver. The latencies of successive EP peaks of the patient may be compared to those of a normal group by use of a normative template. To test for ischemic stroke or intracerebral or subarachnoid hemorrhage, the system provides a blood oxygen saturation monitor, using an infra-red or laser source, to alert the user if the patient's blood in the brain or some brain region is deoxygenated.

[0221] A stimulus device may optionally be placed on each subject, such as an audio generator in the form of an ear plug, which produces a series of "click" sounds. The subject's brain waves are detected and converted into audio tones. The device may have an array of LED (Light Emitting Diodes) which blink depending on the power and frequency composition of the brain wave signal. Power ratios in the frequencies of audio or somatosensory stimuli are similarly encoded. The EEG can be transmitted to a remote physician or medical aide who is properly trained to determine whether the patient's brain function is abnormal and may evaluate the functional state of various levels of the patient's nervous system.

In another embodiment, three pairs of electrodes are attached to the head of the subject under examination via tape or by wearing a cap with electrodes embedded. In one embodiment, the electrode pairs are as follows:

[0222] 1) top of head to anterior throat

[0223] 2) inion-nasion

[0224] 3) left to right mastoid (behind ear).

[0225] A ground electrode is located at an inactive site of the upper part of the vertebral column. The electrodes are connected to differential amplification devices as disclosed below. Because the electrical charges of the brain are so small (on the order of microvolts), amplification is needed. The three amplified analog signals are converted to digital signals and averaged over a certain number of successive digital values to eliminate erroneous values originated by noise on the analog signal.

[0226] All steps defined above are linked to a timing signal which is also responsible for generating stimuli to the subject. The responses are processed in a timed relation to the stimuli and averaged as the brain responds to these stimuli. Of special interest are the responses within certain time periods and time instances after the occurrence of a stimulus of interest. These time periods and instances and their references can be:

[0227] 25 to 60 milliseconds: P1-N1

[0228] 180 to 250 milliseconds: N2

[0229] 100 milliseconds: N100

[0230] 200 milliseconds: P2

[0231] 300 milliseconds: P300.

[0232] In an examination two stimuli sets may be used in a manner that the brain has to respond to the two stimuli differently, one stimulus has a high probability of occurrence, and the other stimulus is a rare occurring phenomena. The rare response is the response of importance. Three response signals are sensed and joined into a three dimensional cartesian system by a mapping program. The assignments can be

[0233] nasion-inion=X,

[0234] left-right mastoid=Y, and

[0235] top of head to anterior throat=Z.

[0236] The assignment of the probes to the axes and the simultaneous sampling of the three response signals at the same rate and time relative to the stimuli allows to real-time map the electrical signal in a three dimensional space. The signal can be displayed in a perspective representation of the three dimensional space, or the three components of the vector are displayed by projecting the vector onto the three planes X-Y, Y-Z, and X-Z, and the three planes are inspected together or separately. Spatial information is preserved for reconstruction as a map. The Vector Amplitude (VA) measure provides information about how far from the center of the head the observed event is occurring; the center of the head being the center (0,0,0) of the coordinate system.

[0237] The cranial bioimpedance sensor can be applied singly or in combination with a cranial blood flow sensor, which can be optical, ultrasound, electromagnetic sensor(s) as described in more details below. In an ultrasound imaging implementation, the carotid artery is checked for plaque build-up. Atherosclerosis is systemic—meaning that if the carotid artery has plaque buildup, other important arteries, such as coronary and leg arteries, might also be atherosclerotic.

[0238] In another embodiment, an epicardial array monopolar ECG system converts signals into the multichannel spectrum domain and identifies decision variables from the autospectra. The system detects and localizes the epicardial projections of ischemic myocardial ECGs during the cardiac activation phase. This is done by transforming ECG signals from an epicardial or torso sensor array into the multichannel spectral domain and identifying any one or more of a plurality of decision variables. The ECG array data can be used to detect, localize and quantify reversible myocardial ischemia.

[0239] In yet another embodiment, a trans-cranial Doppler velocimetry sensor provides a non-invasive technique for measuring blood flow in the brain. An ultrasound beam from a transducer is directed through one of three natural acoustical windows in the skull to produce a waveform of blood flow in the arteries using Doppler sonography. The data collected to determine the blood flow may include values such as the pulse cycle, blood flow velocity, end diastolic velocity, peak systolic velocity, mean flow velocity, total volume of cerebral blood flow, flow acceleration, the mean blood pressure in an artery, and the pulsatility index, or impedance to flow through a vessel. From this data, the condition of an artery may be derived, those conditions including stenosis, vasoconstriction, irreversible stenosis, vasodilation, compensatory vasodilation, hyperemic vasodilation, vascular failure, compliance, breakthrough, and pseudo-normalization.

[0240] To detect stroke attack, the system can detect numbness or weakness of the face, arm or leg, especially on one side of the body. The system detects sudden confusion, trouble speaking or understanding, sudden trouble seeing in one or both eyes, sudden trouble walking, dizziness, loss of balance or coordination, or sudden, severe headache with no known cause. In one embodiment to detect heart attack, the system detects discomfort in the center of the chest that lasts more than a few minutes, or that goes away and comes back. Symptoms can include pain or discomfort in one or both arms, the back, neck, jaw or stomach. The system can also monitor for shortness of breath which may occur with or without chest discomfort. Other signs may include breaking out in a cold sweat, nausea or lightheadedness. In order to best analyze a patient's risk of stroke, additional patient data is utilized by a stroke risk analyzer. This data may include personal data, such as date of birth, ethnic group, sex, physical activity level, and address. The data may further include clinical data such as a visit identification, height, weight, date of visit, age, blood pressure, pulse rate, respiration rate, and so forth. The data may further include data collected from blood work, such as the antinuclear antibody panel, B-vitamin deficiency, C-reactive protein value, calcium level, cholesterol levels, entidal CO2, fibromogin, amount of folic acid, glucose level, hematocrit percentage, H-pylori antibodies, hemocysteine level, hypercapnia, magnesium level, methyl maloric acid level, platelets count, potassium level, sedrate (ESR), serum osmolality, sodium level, zinc level, and so forth. The data may further include the health history data of the patient, including alcohol intake, autoimmune diseases, caffeine intake, carbohydrate intake, carotid artery disease, coronary disease, diabetes, drug abuse, fainting, glaucoma, head injury, hypertension, lupus, medications, smoking, stroke, family history of stroke, surgery history, for example. The automated analyzer can also consider related pathologies in analyzing a patient's risk of stroke, including but not limited to gastritis, increased intracranial pressure, sleep disorders, small vessel disease, and vasculitis.

[0241] In one embodiment, the processor and transceiver on the watch, the patch(es) and the base station conform to the Zigbee protocol. ZigBee is a cost-effective, standards-based wireless networking solution that supports low data-rates, low-power consumption, security, and reliability. Single chip Zigbee controllers with wireless transceivers built-in include the Chipcon/Ember CC2420: Single-chip 802.15.4 radio transceiver and the FreeScale single chip Zigbee and microcontroller. In various embodiments, the processor communicates with a Z axis accelerometer measures the patient's up

and down motion and/or an X and Y axis accelerometer measures the patient's forward and side movements. In one embodiment, EKG and/or blood pressure parameters can be captured by the processor. The controllers upload the captured data when the memory is full or while in wireless contact with other Zigbee nodes.

[0242] The wristwatch device can also be used to control home automation. The user can have flexible management of lighting, heating and cooling systems from anywhere in the home. The watch automates control of multiple home systems to improve conservation, convenience and safety. The watch can capture highly detailed electric, water and gas utility usage data and embed intelligence to optimize consumption of natural resources. The system is convenient in that it can be installed, upgraded and networked without wires. The patient can receive automatic notification upon detection of unusual events in his or her home. For example, if smoke or carbon monoxide detectors detect a problem, the wrist-watch can buzz or vibrate to alert the user and the central hub triggers selected lights to illuminate the safest exit route.

[0243] In another embodiment, the watch serves a key fob allowing the user to wirelessly unlock doors controlled by Zigbee wireless receiver. In this embodiment, when the user is within range, the door Zigbee transceiver receives a request to unlock the door, and the Zigbee transceiver on the door transmits an authentication request using suitable security mechanism. Upon entry, the Zigbee doorlock device sends access signals to the lighting, air-conditioning and entertainment systems, among others. The lights and temperature are automatically set to pre-programmed preferences when the user's presence is detected.

[0244] Although Zigbee is mentioned as an exemplary protocol, other protocols such as UWB, Bluetooth, WiFi and WiMAX can be used as well.

[0245] The sensor can be active and powered by body motion or body heat. The sensor can detect low battery situation and warn the user to provide a replacement battery.

[0246] In one embodiment, a plurality of sensors attached to the person collects the vital parameters. For example, the sensors can be attached to the infant's clothing (shirt or pant), diaper, undergarment or bed sheet, bed linen, or bed spread. The patient may wear one or more sensors, for example devices for sensing EMG, EKG, blood pressure, sugar level, weight, temperature and pressure, among others. In one embodiment, an optical temperature sensor can be used. In another embodiment, a temperature thermistor can be used to sense patient temperature. In another embodiment, a fat scale sensor can be used to detect the patient's fat content. In yet another embodiment, a pressure sensor such as a MEMS sensor can be used to sense pressure on the patient.

[0247] In one embodiment, the sensors are mounted on the patient's wrist (such as a wristwatch sensor) and other convenient anatomical locations. Exemplary sensors include standard medical diagnostics for detecting the body's electrical signals emanating from muscles (EMG and EOG) and brain (EEG) and cardiovascular system (ECG). Leg sensors can include piezoelectric accelerometers designed to give qualitative assessment of limb movement. Additionally, thoracic and abdominal bands used to measure expansion and contraction of the thorax and abdomen respectively. A small sensor can be mounted on the subject's finger in order to detect blood-oxygen levels and pulse rate. Additionally, a microphone can be attached to throat and used in sleep diagnostic recordings for detecting breathing and other noise. One or more position sensors can be used for detecting orientation of body (lying on left side, right side or back) during sleep diagnostic recordings. Each of sensors can individually transmit data to the server **20** using wired or wireless transmission. Alternatively, all sensors can be fed through a common bus into a single transceiver for wired or wireless transmission. The transmission can be done using a magnetic medium such as a floppy disk or a flash memory card, or can be done using infrared or radio network link, among others.

[0248] In one embodiment, the sensors for monitoring vital signs are enclosed in a wrist-watch sized case supported on a wrist band. The sensors can be attached to the back of the case. For example, in one embodiment, Cygnus' AutoSensor (Redwood City, Calif.) is used as a glucose sensor. A low electric current pulls glucose through the skin. Glucose is accumulated in two gel collection discs in the AutoSensor. The AutoSensor measures the glucose and a reading is displayed by the watch.

[0249] In another embodiment, EKG/ECG contact points are positioned on the back of the wrist-watch case. In yet another embodiment that provides continuous, beat-to-beat wrist arterial pulse rate measurements, a pressure sensor is housed in a casing with a 'free-floating' plunger as the sensor applanates the radial artery. A strap provides a constant force for effective applanation and ensuring the position of the sensor housing to remain constant after any wrist movements. The change in the electrical signals due to change in pressure is detected as a result of the piezoresistive nature of the sensor are then analyzed to arrive at various arterial pressure, systolic pressure, diastolic pressure, time indices, and other blood pressure parameters.

[0250] The heartbeat detector can be one of: EKG detector, ECG detector, optical detector, ultrasonic detector, or microphone/digital stethoscope for picking up heart sound. In one embodiment, one EKG/ECG contact point is provided on the back of the wrist watch case and one or more EKG/ECG contact points are provided on the surface of the watch so that when a user's finger or skin touches the contact points, an electrical signal indicative of heartbeat activity is generated. An electrocardiogram (ECG) or EKG is a graphic tracing of the voltage generated by the cardiac or heart muscle during a heartbeat. It provides very accurate evaluation of the performance of the heart. The heart generates an electrochemical impulse that spreads out in the heart in such a fashion as to cause the cells to contract and relax in a timely order and thus give the heart a pumping characteristic. This sequence is initiated by a group of nerve cells called the sinoatrial (SA) node resulting in a polarization and depolarization of the cells of the heart. Because this action is electrical in nature and because the body is conductive with its fluid content, this electrochemical action can be measured at the surface of the body. An actual voltage potential of approximately 1 mV develops between various body points. This can be measured by placing electrode contacts on the body. The four extremities and the chest wall have become standard sites for applying the electrodes. Standardizing electrocardiograms makes it possible to compare them as taken from person to person and from time to time from the same person. The normal electrocardiogram shows typical upward and downward deflections that reflect the alternate contraction of the atria (the two upper chambers) and of the ventricles (the two lower chambers) of the heart. The voltages produced represent pressures exerted by the heart muscles in one pumping cycle. The

first upward deflection, P, is due to atria contraction and is known as the atrial complex. The other deflections, Q, R, S, and T, are all due to the action of the ventricles and are known as the ventricular complexes. Any deviation from the norm in a particular electrocardiogram is indicative of a possible heart disorder.

[0251] The CPU measures the time duration between the sequential pulses and converts each such measurement into a corresponding timing measurement indicative of heart rate. The CPU also processes a predetermined number of most recently occurring timing measurements in a prescribed fashion, to produce an estimate of heartbeat rate for display on a display device on the watch and/or for transmission over the wireless network. This estimate is updated with the occurrence of each successive pulse.

[0252] In one embodiment, the CPU produces the estimate of heartbeat rate by first averaging a plurality of measurements, then adjusting the particular one of the measurements that differs most from the average to be equal to that average, and finally computing an adjusted average based on the adjusted set of measurements. The process may repeat the foregoing operations a number of times so that the estimate of heartbeat rate is substantially unaffected by the occurrence of heartbeat artifacts.

[0253] In one EKG or ECG detector, the heartbeat detection circuitry includes a differential amplifier for amplifying the signal transmitted from the EKG/ECG electrodes and for converting it into single-ended form, and a bandpass filter and a 60 Hz notch filter for removing background noise. The CPU measures the time durations between the successive pulses and estimates the heartbeat rate. The time durations between the successive pulses of the pulse sequence signal provides an estimate of heartbeat rate. Each time duration measurement is first converted to a corresponding rate, preferably expressed in beats per minute (bpm), and then stored in a file, taking the place of the earliest measurement previously stored. After a new measurement is entered into the file, the stored measurements are averaged, to produce an average rate measurement. The CPU optionally determines which of the stored measurements differs most from the average, and replaces that measurement with the average.

[0254] Upon initiation, the CPU increments a period timer used in measuring the time duration between successive pulses. This timer is incremented in steps of about two milliseconds in one embodiment. It is then determined whether or not a pulse has occurred during the previous two milliseconds. If it has not, the CPU returns to the initial step of incrementing the period timer. If a heartbeat has occurred, on the other hand, the CPU converts the time duration measurement currently stored in the period timer to a corresponding heartbeat rate, preferably expressed in bpm. After the heartbeat rate measurement is computed, the CPU determines whether or not the computed rate is intermediate prescribed thresholds of 20 bpm and 240 bpm. If it is not, it is assumed that the detected pulse was not in fact a heartbeat and the period timer is cleared.

[0255] In an optical heartbeat detector embodiment, an optical transducer is positioned on a finger, wrist, or ear lobe. The ear, wrist or finger pulse oximeter waveform is then analyzed to extract the beat-to-beat amplitude, area, and width (half height) measurements. The oximeter waveform is used to generate heartbeat rate in this embodiment. In one implementation, a reflective sensor such as the Honeywell HLC1395 can be used. The device emits lights from a window in the infrared spectrum and receives reflected light in a second window. When the heart beats, blood flow increases temporarily and more red blood cells flow through the windows, which increases the light reflected back to the detector. The light can be reflected, refracted, scattered, and absorbed by one or more detectors. Suitable noise reduction is done, and the resulting optical waveform is captured by the CPU.

[0256] In another optical embodiment, blood pressure is estimated from the optical reading using a mathematical model such as a linear correlation with a known blood pressure reading. In this embodiment, the pulse oximeter readings are compared to the blood-pressure readings from a known working blood pressure measurement device during calibration. Using these measurements the linear equation is developed relating oximeter output waveform such as width to blood-pressure (systolic, mean and pulse pressure). In one embodiment, a transform (such as a Fourier analysis or a Wavelet transform) of the oximeter output can be used to generate a model to relate the oximeter output waveform to the blood pressure. Other non-linear math model or relationship can be determined to relate the oximeter waveform to the blood pressure.

[0257] In one implementation, the pulse oximeter probe and a blood pressure cuff are placed on the corresponding contralateral limb to the oscillometric (Dinamap 8100; Critikon, Inc, Tampa, Fla., USA) cuff site. The pulse oximeter captures data on plethysmographic waveform, heart rate, and oxygen saturation. Simultaneous blood pressure measurements were obtained from the oscillometric device, and the pulse oximeter. Systolic, diastolic, and mean blood pressures are recorded from the oscillometric device. This information is used derive calibration parameters relating the pulse oximeter output to the expected blood pressure. During real time operation, the calibration parameters are applied to the oximeter output to predict blood pressure in a continuous or in a periodic fashion. In yet another embodiment, the device includes an accelerometer or alternative motion-detecting device to determine when the patient' hand is at rest, thereby reducing motion-related artifacts introduced to the measurement during calibration and/or operation. The accelerometer can also function as a falls detection device.

[0258] In an ultrasonic embodiment, a piezo film sensor element is placed on the wristwatch band. The sensor can be the SDT1-028K made by Measurement Specialties, Inc. The sensor should have features such as: (a) it is sensitive to low level mechanical movements, (b) it has an electrostatic shield located on both sides of the element (to minimize 50/60 Hz AC line interference), (c) it is responsive to low frequency movements in the 0.7-12 Hz range of interest. A filter/amplifier circuit has a three-pole low pass filter with a lower (−3 dB) cutoff frequency at about 12-13 Hz. The low-pass filter prevents unwanted 50/60 Hz AC line interference from entering the sensor. However, the piezo film element has a wide band frequency response so the filter also attenuates any extraneous sound waves or vibrations that get into the piezo element. The DC gain is about +30 dB.

[0259] Waveform averaging can be used to reduce noise. It reinforces the waveform of interest by minimizing the effect of any random noise. These pulses were obtained when the arm was motionless. If the arm was moved while capturing the data the waveform did not look nearly as clean. That's because motion of the arm causes the sonic vibrations to enter the piezo film through the arm or by way of the cable. An

accelerometer is used to detect arm movement and used to remove inappropriate data capture.

[0260] In one embodiment that can determine blood pressure, two piezo film sensors and filter/amplifier circuits can be configured as a non-invasive velocity type blood pressure monitor. One sensor can be on the wrist and the other can be located on the inner left elbow at the same location where Korotkoff sounds are monitored during traditional blood pressure measurements with a spygmometer. The correlation between pulse delay and blood pressure is well known in the art of non-invasive blood pressure monitors.

[0261] In an electromagnetic embodiment where the wrist band incorporates a flexible magnet to provide a magnetic field and one or more electrodes positioned on the wrist band to measure voltage drops which are proportional to the blood velocity, instantaneously variation of the flow can be detected but not artery flow by itself. To estimate the flow of blood in the artery, the user or an actuator such as motorized cuff temporarily stops the blood flow in the vein by applying external pressure or by any other method. During the period of time in which the vein flow is occluded, the decay of the artery flow is measured. This measurement may be used for zeroing the sensor and may be used in a model for estimating the steady artery flow. The decay in artery flow due to occlusion of veins is measured to arrive at a model the rate of artery decay. The system then estimates an average artery flow before occlusion. The blood flow can then be related to the blood pressure.

[0262] In another embodiment, an ionic flow sensor is used with a driving electrode that produces a pulsatile current. The pulsatile current causes a separation of positive and negative charges that flows in the blood of the arteries and veins passing in the wrist area. Using electrophoresis principle, the resistance of the volume surrounded by the source first decreases and then increases. The difference in resistance in the blood acts as a mark that moves according to the flow of blood so that marks are flowing in opposite directions by arteries and veins.

[0263] In the above embodiments, accelerometer information is used to detect that the patient is at rest prior to making a blood pressure measurement and estimation. Further, a temperature sensor may be incorporated so that the temperature is known at any minute. The processor correlates the temperature measurement to the blood flow measurement for calibration purposes.

[0264] In another embodiment, the automatic identification of the first, second, third and fourth heart sounds (S**1**, S**2**, S**3**, S**4**) is done. In yet another embodiment, based on the heart sound, the system analyzes the patient for mitral valve prolapse. The system performs a time-frequency analysis of an acoustic signal emanating from the subject's cardiovascular system and examines the energy content of the signal in one or more frequency bands, particularly higher frequency bands, in order to determine whether a subject suffers from mitral valve prolapse.

[0265] FIG. **7** shows an exemplary mesh network that includes the wrist-watch of FIG. **6** in communication with a mesh network including a telephone such as a wired telephone as well as a cordless telephone. In one embodiment, the mesh network is an IEEE 802.15.4 (ZigBee) network. IEEE 802.15.4 defines two device types; the reduced function device (RFD) and the full function device (FFD). In ZigBee these are referred to as the ZigBee Physical Device types. In a ZigBee network a node can have three roles: ZigBee Coordinator, ZigBee Router, and ZigBee End Device. These are the ZigBee Logical Device types. The main responsibility of a ZigBee Coordinator is to establish a network and to define its main parameters (e.g. choosing a radio-frequency channel and defining a unique network identifier). One can extend the communication range of a network by using ZigBee Routers. These can act as relays between devices that are too far apart to communicate directly. ZigBee End Devices do not participate in routing. An FFD can talk to RFDs or other FFDs, while an RFD can talk only to an FFD. An RFD is intended for applications that are extremely simple, such as a light switch or a passive infrared sensor; they do not have the need to send large amounts of data and may only associate with a single FFD at a time. Consequently, the RFD can be implemented using minimal resources and memory capacity and have lower cost than an FFD. An FFD can be used to implement all three ZigBee Logical Device types, while an RFD can take the role as an End Device.

[0266] Turning now to FIGS. **8-13**, various exemplary monitoring devices are shown. In FIG. **8**, a ring **130** has an opening **132** for transmitting and receiving acoustic energy to and from the sensor **84** in an acoustic implementation. In an optical implementation, a second opening (not shown) is provided to emit an optical signal from an LED, for example, and an optical detector can be located at the opening **132** to receive the optical signal passing through the finger wearing the ring **130**. In another implementation, the ring has an electrically movable portion **134** and rigid portions **136-138** connected thereto. The electrically movable portion **134** can squeeze the finger as directed by the CPU during an applanation sweep to determine the arterial blood pressure.

[0267] FIG. **9** shows an alternate finger cover embodiment where a finger-mounted module housing the photo-detector and light source. The finger mounted module can be used to measure information that is processed to determine the user's blood pressure by measuring blood flow in the user's finger and sending the information through a wireless connection to the base station. In one implementation, the housing is made from a flexible polymer material.

[0268] In an embodiment to be worn on the patient's ear lobe, the monitoring device can be part of an earring jewelry clipped to the ear lobe. In the implementation of FIG. **10**, the monitoring device has a jewelry body **149** that contains the monitoring electronics and power source. The surface of the body **149** is an ornamental surface such as jade, ivory, pearl, silver, or gold, among others. The body **149** has an opening **148** that transmits energy such as optical or acoustic energy through the ear lobe to be detected by a sensor **144** mounted on a clamp portion that is secured to the body **149** at a base **147**. The energy detected through the sensor **144** is communicated through an electrical connector to the electronics in the jewelry body **149** for processing the received energy and for performing wireless communication with a base station. In FIG. **2**E, a bolt **145** having a stop end **146** allows the user to adjust the pressure of the clamp against the ear lobe. In other implementations, a spring biased clip is employed to retain the clip on the wearer's ear lobe. A pair of members, which snap together under pressure, are commonly used and the spring pressure employed should be strong enough to suit different thicknesses of the ear lobe.

[0269] FIGS. **11** and **12** show two additional embodiments of the monitoring device. In FIG. **11**, a wearable monitoring device is shown. The monitoring device has a body **160** comprising microphone ports **162**, **164** and **170** arranged in a first

order noise cancelling microphone arrangement. The microphones **162** and **164** are configured to optimally receive distant noises, while the microphone **170** is optimized for capturing the user's speech. A touch sensitive display **166** and a plurality of keys **168** are provided to capture hand inputs. Further, a speaker **172** is provided to generate a verbal feedback to the user.

[0270] Turning now to FIG. **12**, a jewelry-sized monitoring device is illustrated. In this embodiment, a body **172** houses a microphone port **174** and a speaker port **176**. The body **172** is coupled to the user via the necklace **178** so as to provide a personal, highly accessible personal computer. Due to space limitations, voice input/output is an important user interface of the jewelry-sized computer. Although a necklace is disclosed, one skilled in the art can use a number of other substitutes such as a belt, a brace, a ring, or a band to secure the jewelry-sized computer to the user.

[0271] FIG. **13** shows an exemplary ear phone embodiment **180**. The ear phone **180** has an optical transmitter **182** which emits LED wavelengths that are received by the optical receiver **184**. The blood oximetry information is generated and used to determine blood pulse or blood pressure. Additionally, a module **186** contains mesh network communication electronics, accelerometer, and physiological sensors such as EKG/ECG sensors or temperature sensors or ultrasonic sensors. In addition, a speaker (not shown) is provided to enable voice communication over the mesh network, and a microphone **188** is provided to pick up voice during verbal communication and pick up heart sound when the user is not using the microphone for voice communication. The ear phone optionally has an ear canal temperature sensor for sensing temperature in a human.

[0272] FIG. **14**A shows an exemplary adhesive patch embodiment. The patch may be applied to a persons skin by anyone including the person themselves or an authorized person such as a family member or physician. The adhesive patch is shown generally at **190** having a gauze pad **194** attached to one side of a backing **192**, preferably of plastic, and wherein the pad can have an impermeable side **194** coating with backing **192** and a module **196** which contains electronics for communicating with the mesh network and for sensing acceleration and bioimpedance, EKG/ECG, heart sound, microphone, optical sensor, or ultrasonic sensor in contacts with a wearer's skin. In one embodiment, the module **196** has a skin side that may be coated with a conductive electrode lotion or gel to improve the contact. The entire patch described above may be covered with a plastic or foil strip to retain moisture and retard evaporation by a conductive electrode lotion or gel provided improve the electrode contact. In one embodiment, an acoustic sensor (microphone or piezoelectric sensor) and an electrical sensor such as EKG sensor contact the patient with a conductive gel material. The conductive gel material provides transmission characteristics so as to provide an effective acoustic impedance match to the skin in addition to providing electrical conductivity for the electrical sensor. The acoustic transducer can be directed mounted on the conductive gel material substantially with or without an intermediate air buffer. The entire patch is then packaged as sterile as are other over-the-counter adhesive bandages. When the patch is worn out, the module **196** may be removed and a new patch backing **192** may be used in place of the old patch. One or more patches may be applied to the patient's body and these patches may communicate wirelessly using the mesh network or alternatively they may communicate through a personal area network using the patient's body as a communication medium.

[0273] The term "positional measurement," as that term is used herein, is not limited to longitude and latitude measurements, or to metes and bounds, but includes information in any form from which geophysical positions can be derived. These include, but are not limited to, the distance and direction from a known benchmark, measurements of the time required for certain signals to travel from a known source to the geophysical location where the signals may be electromagnetic or other forms, or measured in terms of phase, range, Doppler or other units.

[0274] FIG. **14**B shows a sunglass or eyeglass embodiment which contains electronics for communicating with the mesh network and for sensing acceleration and bioimpedance, EKG/ECG, EMG, heart sound, microphone, optical sensor, or ultrasonic sensor in contacts with a wearer's skin. In one embodiment, the ear module **310** contains optical sensors to detect temperature, blood flow and blood oxygen level as well as a speaker to provide wireless communication or hearing aid. The blood flow or velocity information can be used to estimate blood pressure. The side module **312** can contain an array of bioimpedance sensors such as bipolar or tetrapolar bioimpedance probes to sense fluids in the brain. Additional bioimpedance electrodes can be positioned around the rim of the glasses as well as the glass handle or in any spots on the eyewear that contacts the user. The side module **312** or **314** can also contain one or more EKG electrodes to detect heart beat parameters and to detect heart problems. The side module **312** or **314** can also contain piezoelectric transducers or microphones to detect heart activities near the brain. The side module **312** or **314** can also contain ultrasound transmitter and receiver to create an ultrasound model of brain fluids. In one embodiment, an acoustic sensor (microphone or piezoelectric sensor) and an electrical sensor such as EKG sensor contact the patient with a conductive gel material. The conductive gel material provides transmission characteristics so as to provide an effective acoustic impedance match to the skin in addition to providing electrical conductivity for the electrical sensor. The acoustic transducer can be directed mounted on the conductive gel material substantially with or without an intermediate air buffer. In another embodiment, electronics components are distributed between first and second ear stems. In yet another embodiment, the method further comprises providing a nose bridge, wherein digital signals generated by the electronics circuit are transmitted across the nose bridge. The eyewear device may communicate wirelessly using the mesh network or alternatively they may communicate through a personal area network using the patient's body as a communication medium. Voice can be transmitted over the mesh wireless network. The speaker can play digital audio file, which can be compressed according to a compression format. The compression format may be selected from the group consisting of: PCM, DPCM, ADPCM, AAC, RAW, DM, RIFF, WAV, BWF, AIFF, AU, SND, CDA, MPEG, MPEG-1, MPEG-2, MPEG-2.5, MPEG-4, MPEG-J, MPEG 2-ACC, MP3, MP3Pro, ACE, MACE, MACE-3, MACE-6, AC-3, ATRAC, ATRAC3, EPAC, Twin VQ, VQF, WMA, WMA with DRM, DTS, DVD Audio, SACD, TAC, SHN, OGG, Ogg Vorbis, Ogg Tarkin, Ogg Theora, ASF, LQT, QDMC, A2b, .ra, .rm, and Real Audio G2, RMX formats, Fairplay, Quicktime, SWF, and PCA, among others.

[0275] In one embodiment, the eye wear device of FIG. **14**B can provide a data port, wherein the data port is carried

by the ear stem. The data port may be a mini-USB connector, a FIREWIRE connector, an IEEE 1394 cable connector, an RS232 connector, a JTAB connector, an antenna, a wireless receiver, a radio, an RF receiver, or a Bluetooth receiver. In another embodiment, the wearable device is removably connectable to a computing device. The wearable wireless audio device may be removably connectable to a computing device with a data port, wherein said data port is mounted to said wearable wireless audio device. In another embodiment, projectors can project images on the glasses to provide head-mounted display on the eye wear device. The processor can display fact, figure, to do list, and reminders need in front of the user's eyes.

[0276] FIG. **15** shows a system block diagram of the network-based patient monitoring system in a hospital or nursing home setting. The system has a patient component **215**, a server component **216**, and a client component **217**. The patient component **215** has one or more mesh network patient transmitters **202** for transmitting data to the central station. The central server comprises one or more Web servers **205**, one or more waveform servers **204** and one or more mesh network receivers **211**. The output of each mesh network receiver **211** is connected to at least one of the waveform servers **204**. The waveform servers **204** and Web the servers **205** are connected to the network **105**. The Web servers **205** are also connected to a hospital database **230**. The hospital database **230** contains patient records. In the embodiment of FIG. **15**A, a plurality of nurse stations provide a plurality of nurse computer user interface **208**. The user interface **208** receives data from an applet **210** that communicates with the waveform server **204** and updates the display of the nurse computers for treating patients.

[0277] The network client component **217** comprises a series of workstations **106** connected to the network **105**. Each workstation **106** runs a World Wide Web (WWW or Web) browser application **208**. Each Web browser can open a page that includes one or more media player applets **210**. The waveform servers **204** use the network **105** to send a series of messages **220** to the Web servers **205**. The Web servers **205** use the network **105** to communicate messages, shown as a path **221**, to the workstations **106**. The media player applets running on the workstations **106** use the network **105** to send messages over a path **223** directly to the waveform servers **204**.

[0278] In a variation of the system of FIG. **15** for call center monitoring, the patient appliances **202** wirelessly communicate to home base stations (not shown) which are connected to the POTS or PSTN network for voice as well as data transmission. The data is captured by the waveform server **204** and the voice is passed through to the call center agent computer **207** where the agent can communicate by voice with the patient. The call center agent can forward the call to a professional such as a nurse or doctor or emergency service personnel if necessary. Hence, the system can include a patient monitoring appliance coupled to the POTS or PSTN through the mesh network. The patient monitoring appliance monitors drug usage and patient falls. The patient monitoring appliance monitors patient movement. A call center can call to the telephone to provide a human response.

[0279] In one exemplary monitoring service providing system, such as an emergency service providing system, the system includes a communication network (e.g., the Public Switch Telephone Network or PSTN or POTS), a wide area communication network (e.g., TCP/IP network) in call centers. The communication network receives calls destined for one of the call centers. In this regard, each call destined for one of the call centers is preferably associated with a particular patient, a call identifier or a call identifier of a particular set of identifiers. A call identifier associated with an incoming call may be an identifier dialed or otherwise input by the caller. For example, the call centers may be locations for receiving calls from a particular hospital or nursing home.

[0280] To network may analyze the automatic number information (ANI) and/or automatic location information (ALI) associated with the call. In this regard, well known techniques exist for analyzing the ANI and ALI of an incoming call to identify the call as originating from a particular calling device or a particular calling area. Such techniques may be employed by the network to determine whether an incoming call originated from a calling device within an area serviced by the call centers. Moreover, if an incoming call originated from such an area and if the incoming call is associated with the particular call identifier referred to above, then the network preferably routes the call to a designated facility.

[0281] When a call is routed to the facility, a central data manager, which may be implemented in software, hardware, or a combination thereof, processes the call according to techniques that will be described in more detail hereafter and routes the call, over the wide area network, to one of the call centers depending on the ANI and/or ALI associated with the call. In processing the call, the central data manager may convert the call from one communication protocol to another communication protocol, such as voice over internet protocol (VoIP), for example, in order to increase the performance and/or efficiency of the system. The central data manager may also gather information to help the call centers in processing the call. There are various techniques that may be employed by the central data manager to enhance the performance and/or efficiency of the system, and examples of such techniques will be described in more detail hereafter.

[0282] Various benefits may be realized by utilizing a central facility to intercept or otherwise receive a call from the network and to then route the call to one of the call centers via WAN. For example, serving multiple call centers with a central data manager, may help to reduce total equipment costs. In this regard, it is not generally necessary to duplicate the processing performed by the central data manager at each of the call centers. Thus, equipment at each of the call centers may be reduced. As more call centers are added, the equipment savings enabled by implementing equipment at the central data manager instead of the call centers generally increases. Furthermore, the system is not dependent on any telephone company's switch for controlling the manner in which data is communicated to the call centers. In this regard, the central data manager may receive a call from the network and communicate the call to the destination call centers via any desirable communication technique, such as VoIP, for example. Data security is another possible benefit of the exemplary system **10** as the central data manager is able to store the data for different network providers associated with network on different partitions.

[0283] In one embodiment for professional users such as hospitals and nursing homes, a Central Monitoring Station provides alarm and vital sign oversight for a plurality of patients from a single computer workstation. FIG. **15**E shows an exemplary multi-station vital parameter user interface for a professional embodiment, while FIG. **15**F shows an exem-

plary trending pattern display. The clinician interface uses simple point and click actions with a computer mouse or trackball. The clinician can initiate or change monitoring functions from either the Central Station or the bedside monitor. One skilled in the art will recognize that patient data such as EKG/EMG/EEG/BP data can be shown either by a scrolling waveform that moves along the screen display, or by a moving bar where the waveform is essentially stationary and the bar moves across the screen.

[0284] In one embodiment, software for the professional monitoring system provides a login screen to enter user name and password, together with database credentials. In Select Record function, the user can select a person, based on either entered or pre-selected criteria. From here navigate to their demographics, medical record, etc. The system can show a persons demographics, includes aliases, people involved in their care, friends and family, previous addresses, home and work locations, alternative numbers and custom fields. The system can show all data elements of a person's medical record. These data elements are not 'hard wired', but may be configured in the data dictionary to suit particular user requirements. It is possible to create views of the record that filter it to show (for instance) just the medications or diagnosis, etc. Any data element can be designated 'plan able' in the data dictionary and then scheduled. A Summary Report can be done. Example of a report displayed in simple format, selecting particular elements and dates. As many of these reports as required can be created, going across all data in the system based on some criteria, with a particular selection of fields and sorting, grouping and totaling criteria. Reports can be created that can format and analyze any data stored on the server. The system supports OLE controls and can include graphs, bar codes, etc. These can be previewed on screen, printed out or exported in a wide variety of formats. The system also maintains a directory of all organizations the administrator wishes to record as well as your own. These locations are then used to record the location for elements of the medical record (where applicable), work addresses for people involved in the care and for residential addresses for people in residential care. The data elements that form the medical record are not 'hard wired' (i.e. predefined) but may be customized by the users to suit current and future requirements.

[0285] In one embodiment, the wearable appliance can store patient data in its data storage device such as flash memory. The data can include Immunizations and dates; medications (prescriptions and supplements); physician names, addresses, phone numbers, email addresses; location and details of advance directives; insurance company, billing address, phone number, policy number; emergency contacts, addresses, home/business/pager phone numbers, email addresses. The data can include color or black and white photo of the wearer of the device; a thumb print, iris print of other distinguishing physical characteristic; dental records; sample ECG or Cardiac Echo Scan; blood type; present medication being taken; drug interaction precautions; drug and/or allergic reaction precautions; a description of serious preexisting medical conditions; Emergency Medical Instructions, which could include: administering of certain suggested drugs or physical treatments; calling emergency physician numbers listed; bringing the patient to a certain type of clinic or facility based on religious beliefs; and living will instructions in the case of seriously ill patients; Organ Donor instructions; Living Will instructions which could include: instructions for life support or termination of treatment; notification of next of kin and/or friends including addresses and telephone numbers; ECG trace; Cardiac Echo Scan; EEG trace; diabetes test results; x-ray scans, among others. The wearable appliance stores the wearer's medical records and ID information. In one embodiment, to start the process new/original medical information is organized and edited to fit into the BWD page format either in physicians office or by a third party with access to a patient's medical records using the base unit storage and encrypting software which can be stored in a normal pc or other compatible computer device. The system can encrypt the records so as to be secure and confidential and only accessible to authorized individuals with compatible de-encrypting software. In the event the wearer is stricken with an emergency illness a Paramedic, EMT or Emergency Room Technician can use a wireless interrogator to rapidly retrieve and display the stored medical records in the wearable appliance and send the medical records via wireless telemetry to a remote emergency room or physicians office for rapid and life saving medical intervention in a crisis situation. In a Non-emergency Situation, the personal health information service is also helpful as it eliminates the hassle of repeatedly filling out forms when changing health plans or seeing a new physician; stores vaccination records to schools or organizations without calling the pediatrician; or enlists the doctor's or pharmacist's advice about multiple medications without carrying all the bottles to a personal visit. The system can store 48 hrs. of EKG, EEG, EMG, or blood pressure data.

[0286] In one embodiment, a plurality of body worn sensors with in-door positioning can be used as an Emergency Department and Urgent Care Center Tracking System. The system tracks time from triage to MD assessment, identifies patients that have not yet been registered, records room usage, average wait time, and average length of stay. The system allows user defined "activities" so that hospitals can track times and assist in improving patient flow and satisfaction. The system can set custom alerts and send email/pager notifications to better identify long patient wait times and record the number of these alert occurrences. The system can manage room usage by identifying those rooms which are under/over utilized. The hospital administrator can set manual or automatic alerts and generate custom reports for analysis of patient flow. The system maximizes revenue by streamlining processes and improving throughput; improves charge capture by ensuring compliance with regulatory standards; increases accountability by collecting clear, meaningful data; enhances risk management and QA; and decreases liability.

[0287] FIG. **16**A shows ant exemplary process to continuously determine blood pressure of a patient. The process generates a blood pressure model of a patient (**2002**); determines a blood flow velocity using a piezoelectric transducer (**2004**); and provides the blood flow velocity to the blood pressure model to continuously estimate blood pressure (**2006**).

[0288] FIG. **16**B shows another exemplary process to continuously determine blood pressure of a patient. First, during an initialization mode, a monitoring device and calibration device are attached to patient (**2010**). The monitoring device generates patient blood flow velocity, while actual blood pressure is measured by a calibration device (**2012**). Next, the process generates a blood pressure model based on the blood flow velocity and the actual blood pressure (**2014**). Once this is done, the calibration device can be removed (**2016**). Next, during an operation mode, the process periodically samples

blood flow velocity from the monitoring device on a real-time basis (**18**) and provides the blood flow velocity as input information to the blood pressure model to estimate blood pressure (**20**). This process can be done in continuously or periodically as specified by a user.

[0289] In one embodiment, to determine blood flow velocity, acoustic pulses are generated and transmitted into the artery using an ultrasonic transducer positioned near a wrist artery. These pulses are reflected by various structures or entities within the artery (such as the artery walls, and the red blood cells within the subject's blood), and subsequently received as frequency shifts by the ultrasonic transducer. Next, the blood flow velocity is determined. In this process, the frequencies of those echoes reflected by blood cells within the blood flowing in the artery differ from that of the transmitted acoustic pulses due to the motion of the blood cells. This well known "Doppler shift" in frequency is used to calculate the blood flow velocity. In one embodiment for determining blood flow velocity, the Doppler frequency is used to determine mean blood velocity. For example, U.S. Pat. No. 6,514,211, the content of which is incorporated by reference, discusses blood flow velocity using a time-frequency representation.

[0290] In one implementation, the system can obtain one or more numerical calibration curves describing the patient's vital signs such as blood pressure. The system can then direct energy such as infrared or ultrasound at the patient's artery and detecting reflections thereof to determine blood flow velocity from the detected reflections. The system can numerically fit or map the blood flow velocity to one or more calibration parameters describing a vital-sign value. The calibration parameters can then be compared with one or more numerical calibration curves to determine the blood pressure.

[0291] Additionally, the system can analyze blood pressure, and heart rate, and pulse oximetry values to characterize the user's cardiac condition. These programs, for example, may provide a report that features statistical analysis of these data to determine averages, data displayed in a graphical format, trends, and comparisons to doctor-recommended values.

[0292] In one embodiment, feed forward artificial neural networks (NNs) are used to classify valve-related heart disorders. The heart sounds are captured using the microphone or piezoelectric transducer. Relevant features were extracted using several signal processing tools, discrete wavelet transfer, fast fourier transform, and linear prediction coding. The heart beat sounds are processed to extract the necessary features by: a) denoising using wavelet analysis, b) separating one beat out of each record c) identifying each of the first heart sound (FHS) and the second heart sound (SHS). Valve problems are classified according to the time separation between the FHS and th SHS relative to cardiac cycle time, namely whether it is greater or smaller than 20% of cardiac cycle time. In one embodiment, the NN comprises 6 nodes at both ends, with one hidden layer containing 10 nodes. In another embodiment, linear predictive code (LPC) coefficients for each event were fed to two separate neural networks containing hidden neurons.

[0293] In another embodiment, a normalized energy spectrum of the sound data is obtained by applying a Fast Fourier Transform. The various spectral resolutions and frequency ranges were used as inputs into the NN to optimize these parameters to obtain the most favorable results.

[0294] In another embodiment, the heart sounds are denoised using six-stage wavelet decomposition, thresholding, and then reconstruction. Three feature extraction techniques were used: the Decimation method, and the wavelet method. Classification of the heart diseases is done using Hidden Markov Models (HMMs).

[0295] In yet another embodiment, a wavelet transform is applied to a window of two periods of heart sounds. Two analyses are realized for the signals in the window: segmentation of first and second heart sounds, and the extraction of the features. After segmentation, feature vectors are formed by using he wavelet detail coefficients at the sixth decomposition level. The best feature elements are analyzed by using dynamic programming.

[0296] In another embodiment, the wavelet decomposition and reconstruction method extract features from the heart sound recordings. An artificial neural network classification method classifies the heart sound signals into physiological and pathological murmurs. The heart sounds are segmented into four parts: the first heart sound, the systolic period, the second heart sound, and the diastolic period. The following features can be extracted and used in the classification algorithm: a) Peak intensity, peak timing, and the duration of the first heart sound b) the duration of the second heart sound c) peak intensity of the aortic component of S**2**(A**2**) and the pulmonic component of S**2** (P**2**), the splitting interval and the reverse flag of A**2** and P**2**, and the timing of A**2** d) the duration, the three largest frequency components of the systolic signal and the shape of the envelope of systolic murmur e) the duration the three largest frequency components of the diastolic signal and the shape of the envelope of the diastolic murmur.

[0297] FIG. **16**C shows an exemplary process to detect stroke attack. In this embodiment, 3D accelerometer sensing is used. First, the process looks for weakness (hemiparesis) in either the left half or the right half of the body, for example the left/right arms, legs, or face (**3000**). Next, the system analyzes walking pattern to see if the patient has a loss of balance or coordination (**3002**). The system then asks the user to move hands/feet in a predetermined pattern (**3004**) and reads accelerometer output in accordance with predetermined pattern movement (**3006**). For example, the system can ask the user to point his/her right or left hand to the nose. The accelerometer outputs are tested to check if the correct hand did reach the nose. In another example, the user can be prompted to extend his or her hands on both side and wiggle the hands or to kick the legs. Again, the outputs of the accelerometers are used to confirm that the user is able to follow direction. The accelerometer outputs are provided to a pattern classifier, which can be an HMM, a neural network, a Bayesian network, fuzzy logic, or any suitable classifiers (**3008**). The system also checks whether patient is experiencing dizziness or sudden, severe headache with no known cause (**3010**). Next, the system displays a text image and asks the patient to read back the text image, one eye at a time (**3012**). Using a speech recognizer module, the user speech is converted into text to compare against the text image. The speech recognizer also detects if the user exhibits signs of confusion, trouble speaking or understanding (**3014**). The system also asks the patient if they feel numbness in the body—arms, legs, face (**3016**). Next the system asks the patient to squeeze gauge/force sensor to determine force applied during squeeze (**3018**). If any of the above tests indicate a possible stroke, the system dis-

plays a warning to the patient and also connects the patient to the appropriate emergency response authority, family member, or physician.

[0298] In one implementation, an HMM is used to track patient motor skills or patient movement patterns. Human movement involves a periodic motion of the legs. Regular walking involves the coordination of motion at the hip, knee and ankle, which consist of complex joints. The muscular groups attached at various locations along the skeletal structure often have multiple functions. The majority of energy expended during walking is for vertical motion of the body. When a body is in contact with the ground, the downward force due to gravity is reflected back to the body as a reaction to the force. When a person stands still, this ground reaction force is equal to the person's weight multiplied by gravitational acceleration. Forces can act in other directions. For example, when we walk, we also produce friction forces on the ground. When the foot hits the ground at a heel strike, the friction between the heel and the ground causes a friction force in the horizontal plane to act backwards against the foot. This force therefore causes a breaking action on the body and slows it down. Not only do people accelerate and brake while walking, they also climb and dive. Since reaction force is mass times acceleration, any such acceleration of the body will be reflected in a reaction when at least one foot is on the ground. An upwards acceleration will be reflected in an increase in the vertical load recorded, while a downwards acceleration will be reduce the effective body weight. Zigbee wireless sensors with tri-axial accelerometers are mounted to the patient on different body locations for recording, for example the tree structure as shown in FIG. **16**D. As shown therein, sensors can be placed on the four branches of the links connect to the root node (torso) with the connected joint, left shoulder (LS), right shoulder (RS), left hip (LH), and right hip (RH). Furthermore, the left elbow (LE), right elbow (RE), left knee (LK), and right knee (RK) connect the upper and the lower extremities. The wireless monitoring devices can also be placed on upper back body near the neck, mid back near the waist, and at the front of the right leg near the ankle, among others.

[0299] The sequence of human motions can be classified into several groups of similar postures and represented by mathematical models called model-states. A model-state contains the extracted features of body signatures and other associated characteristics of body signatures. Moreover, a posture graph is used to depict the inter-relationships among all the model-states, defined as PG(ND,LK), where ND is a finite set of nodes and LK is a set of directional connections between every two nodes. The directional connection links are called posture links. Each node represents one model-state, and each link indicates a transition between two model-states. In the posture graph, each node may have posture links pointing to itself or the other nodes.

[0300] In the pre-processing phase, the system obtains the human body profile and the body signatures to produce feature vectors. In the model construction phase, the system generate a posture graph, examine features from body signatures to construct the model parameters of HMM, and analyze human body contours to generate the model parameters of ASMs. In the motion analysis phase, the system uses features extracted from the body signature sequence and then applies the pre-trained HMM to find the posture transition path, which can be used to recognize the motion type. Then, a motion characteristic curve generation procedure computes the motion parameters and produces the motion characteristic curves. These motion parameters and curves are stored over time, and if differences for the motion parameters and curves over time is detected, the system then runs the patient through additional tests to confirm a stroke attack, and if a stroke attack is suspected, the system prompts the user to seek medical attention immediately and preferably within the 3 hour for receiving TPA.

[0301] FIG. **16**E shows one exemplary process for determining weakness in the left or right half of the body. The process compares historical left shoulder (LS) strength against current LS strength (**3200**). The process also compares historical right shoulder (RS) strength against current RS strength (**3202**). The process can compare historical left hip (LH) strength against current LH strength (**3204**). The process can also compare historical right hip (RH) strength against current RH strength (**3206**). If the variance between historical and current strength exceeds threshold, the process generates warnings (**3208**). Furthermore, similar comparisons can be made for sensors attached to the left elbow (LE), right elbow (RE), left knee (LK), and right knee (RK) connect the upper and the lower extremities, among others.

[0302] The system can ask the patient to squeeze a strength gauge, piezoelectric sensor, or force sensor to determine force applied during squeeze. The user holds the sensor or otherwise engages the sensor. The user then applies and holds a force (e.g., compression, torque, etc.) to the sensor, which starts a timer clock and triggers a sampling start indicator to notify the user to continue to apply (maximum) force to the sensor. Strength measurements are then sampled periodically during the sampling period until the expiration of time. From the sampled strength data, certain strength measurement values are selected, such as the maximum value, average value (s), or values obtained during the sampling period. The user can test both hands at the same time, or alternatively he may test one hand at a time. A similar approach is used to sense leg strength, except that the user is asked to pushed down on a scale to determine the foot force generated by the user.

[0303] The system can detect hemiparesis, a very common symptom of stroke, by detecting muscular weakness or partial paralysis to one side of the body. Additionally, the accelerometers can detect ataxia, which is an impaired ability to perform smooth coordinated voluntary movements. Additionally, the system can detect aphasia, including receptive aphasia and expressive aphasia. Aphasia is a cognitive disorder marked by an impaired ability to comprehend (receptive aphasia) or express (expressive aphasia) language. Exemplary embodiments are disclosed for detecting receptive aphasia by displaying text or playing verbal instructions to the user, followed by measuring the correctness and/or time delay of the response from the user. Exemplary embodiments are also disclosed for detecting expressive aphasia by positing sound made by an animal to the user, prompting the user to identify or name the animal, and measuring the correctness and/or time delay of the response from the user. The system can also detect dysarthria, a disorder of speech articulation (e.g., slurred speech), by prompting the user to say a word or phrase that is recorded for subsequent comparison by voice pattern recognition or evaluation by medical personnel.

[0304] In the above manner, the system automatically reminds the user to get help if he feels a sudden numbness or weakness of the face, arm or leg, especially on one side of the body, sudden confusion, trouble speaking or understanding,

sudden trouble seeing in one or both eyes, or sudden trouble walking, dizziness, loss of balance or coordination.

[0305] In one embodiment, the accelerometers distinguish between lying down and each upright position of sitting and standing based on the continuous output of the 3D accelerometer. The system can detect (a) extended time in a single position; (b) extended time sitting in a slouching posture (kyphosis) as opposed to sitting in an erect posture (lordosis); and (c) repetitive stressful movements, such as may be found on some manufacturing lines, while typing for an extended period of time without proper wrist support, or while working all day at a job lifting boxes, among others. In one alternative embodiment, angular position sensors, one on each side of the hip joint, can be used to distinguish lying down, sitting, and standing positions. In another embodiment, the present invention repeatedly records position and/or posture data over time. In one embodiment, magnetometers can be attached to a thigh and the torso to provide absolute rotational position about an axis coincident with Earth's gravity vector (compass heading, or yaw). In another embodiment, the rotational position can be determined through the in-door positioning system as discussed above.

[0306] Depending on the severity of the stroke, patients can experience a loss of consciousness, cognitive deficits, speech dysfunction, limb weakness, hemiplegia, vertigo, diplopia, lower cranial nerve dysfunction, gaze deviation, ataxia, hemianopia, and aphasia, among others. Four classic syndromes that are characteristically caused by lacunar-type stroke are: pure motor hemiparesis, pure sensory syndrome, ataxic hemiparesis syndrome, and clumsy-hand dysarthria syndrome. Patients with pure motor hemiparesis present with face, arm, and leg weakness. This condition usually affects the extremities equally, but in some cases it affects one extremity more than the other. The most common stroke location in affected patients is the posterior limb of the internal capsule, which carries the descending corticospinal and corticobulbar fibers. Other stroke locations include the pons, midbrain, and medulla. Pure sensory syndrome is characterized by hemibody sensory symptoms that involve the face, arm, leg, and trunk. It is usually the result of an infarct in the thalamus. Ataxic hemiparesis syndrome features a combination of cerebellar and motor symptoms on the same side of the body. The leg is typically more affected than the arm. This syndrome can occur as a result of a stroke in the pons, the internal capsule, or the midbrain, or in the anterior cerebral artery distribution. Patients with clumsy-hand dysarthria syndrome experience unilateral hand weakness and dysarthria. The dysarthria is often severe, whereas the hand involvement is more subtle, and patients may describe their hand movements as "awkward." This syndrome is usually caused by an infarct in the pons.

[0307] Different patterns of signs can provide clues as to both the location and the mechanism of a particular stroke. The system can detect symptoms suggestive of a brainstem stroke include vertigo, diplopia, bilateral abnormalities, lower cranial nerve dysfunction, gaze deviation (toward the side of weakness), and ataxia. Indications of higher cortical dysfunction-such as neglect, hemianopsia, aphasia, and gaze preference (opposite the side of weakness)-suggest hemispheric dysfunction with involvement of a superficial territory from an atherothrombotic or embolic occlusion of a mainstem vessel or peripheral branch.

[0308] The system can detect a pattern of motor weakness. Ischemia of the cortex supplied by the middle cerebral artery typically causes weakness that (1) is more prominent in the arm than in the leg and (2) involves the distal muscles more than the proximal muscles. Conversely, involvement of an area supplied by the superficial anterior cerebral artery results in weakness that (1) is more prominent in the leg than the arm and (2) involves proximal upper extremity (shoulder) muscles more than distal upper extremity muscles. Flaccid paralysis of both the arm and leg (unilateral) suggests ischemia of the descending motor tracts in the basal ganglia or brainstem. This is often caused by an occlusion of a penetrating artery as a result of small-vessel disease. Once the stroke is detected, intravenous (IV) tissue plasminogen activator (t-PA) needs to be given within 3 hours of symptom onset. An accurate assessment of the timing of the stroke is also crucial. The system keeps track of the timing off the onset of the stroke for this purpose.

[0309] One major symptom of a stroke is unexplained weakness or numbness in the muscle. To detect muscle weakness or numbness, in one embodiment, the system applies a pattern recognizer such as a neural network or a Hidden Markov Model (HMM) to analyze accelerometer output. In another embodiment, electromyography (EMG) is used to detect muscle weakness. In another embodiment, EMG and a pattern analyzer is used to detect muscle weakness. In yet another embodiment, a pattern analyzer analyzes both accelerometer and EMG data to determine muscle weakness. In a further embodiment, historical ambulatory information (time and place) is used to further detect changes in muscle strength. In yet other embodiments, accelerometer data is used to confirm that the patient is at rest so that EMG data can be accurately captured or to compensate for motion artifacts in the EMG data in accordance with a linear or non-linear compensation table. In yet another embodiment, the EMG data is used to detect muscle fatigue and to generate a warning to the patient to get to a resting place or a notification to a nurse or caregiver to render timely assistance.

[0310] The amplitude of the EMG signal is stochastic (random) in nature and can be reasonably represented by a Gausian distribution function. The amplitude of the signal can range from 0 to 10 mV (peak-to-peak) or 0 to 1.5 mV (rms). The usable energy of the signal is limited to the 0 to 500 Hz frequency range, with the dominant energy being in the 50-150 Hz range. Usable signals are those with energy above the electrical noise level. The dominant concern for the ambient noise arises from the 60 Hz (or 50 Hz) radiation from power sources. The ambient noise signal may have an amplitude that is one to three orders of magnitude greater than the EMG signal. There are two main sources of motion artifact: one from the interface between the detection surface of the electrode and the skin, the other from movement of the cable connecting the electrode to the amplifier. The electrical signals of both noise sources have most of their energy in the frequency range from 0 to 20 Hz and can be reduced.

[0311] As shown in FIG. **17**A, to eliminate the potentially much greater noise signal from power line sources, a differential instrumentation amplifier is employed. Any signal that originates far away from the detection sites will appear as a common signal, whereas signals in the immediate vicinity of the detection surfaces will be different and consequently will be amplified. Thus, relatively distant power lines noise signals will be removed and relatively local EMG signals will be amplified. The source impedance at the junction of the skin and detection surface may range from several thousand ohms to several megohms for dry skin. In order to prevent attenu-

ation and distortion of the detected signal due to the effects of input loading, the input impedance of the differential amplifier is as large as possible, without causing ancillary complications to the workings of the differential amplifier. The signal to noise ratio is increased by filtering between 20-500 Hz with a roll-off of 12 dB/octave.

[0312] In one embodiment, direct EMG pre-amplification at the skin surface provides the best myoelectric signal quality for accurate, reliable EMG signal detection and eliminates cable motion artifact. The double-differential instrumentation pre-amplifier design attenuates unwanted common-mode bioelectric signals to reduce cross-talk from adjacent muscle groups. Internal RFI and ESD protection prevents radio frequency interference and static damage. The constant low-impedance output of the pre-amplifier completely eliminates cable noise and cable motion artifacts without requiring any additional signal processing within the pre-amplifier. An integral ground reference plane provides immunity to electromagnetic environmental noise. All signal and power conductors in the pre-amplifier cable are enclosed inside an independent, isolated shield to eliminate interference from AC power-lines and other sources. The contacts are corrosion-free, medical grade stainless steel for maximal signal flow. The system uses biocompatible housing and sensor materials to prevent allergic reactions.

[0313] In one implementation, MA-311 EMG pre-amplifiers from Motion Lab Systems, Inc., Baton Rouge, La., can be used. The pre-amplifiers incorporate both radio frequency interference (RFI) filters and electrostatic discharge (ESD) protection circuitry resulting in an extraordinarily reliable EMG pre-amplifier that can be used in almost any environment. Featuring a double-differential input, the unique design of the Motion Lab Systems EMG pre-amplifiers enables researchers to produce high-quality, low-noise EMG data from subjects under the most adverse conditions (e.g. on treadmills, using mobile phones etc.) without any skin preparation or subsequent signal processing.

[0314] In another implementation, a micro-powered EMG embodiment includes an instrumentation amplifier and an AC coupling that maintains a high CMRR with a gain of about 1000. The electronic circuits are mounted on a flexible circuit board (FPC) with slidable electrode settings that allows differential recording at various distances between the electrodes. The high gain amplifier is placed next to the recording electrodes to achieve high SNR. Battery power provides isolation and low noise at various frequencies that would likely not be fully attenuated by the PSRR and causing alias errors.

[0315] The system can detect dominant symptoms of stroke can include weakness or paralysis of the arms and/or legs, incoordination (ataxia), numbness in the arms/legs using accelerometers or EMG sensors. The EMG sensors can detect muscle fatigue and can warn the patient to get to a resting area if necessary to prevent a fall. The system can detect partial/total loss of vision by asking the patient to read a predetermined phrase and detect slur using speech recognizer. The system can detect loss of consciousness/coma by detecting lack of movement. Voice/speech disturbances are not initially the dominant symptoms in stroke, and the disturbances can be detected by a speech recognizer. In one implementation, the system uses PNL (probabilistic networks library) to detect unusual patient movement/ambulatory activities that will lead to a more extensive check for stroke occurrence. PNL supports dynamic Bayes nets, and factor graphs; influence diagrams. For inference, PNL supports exact inference using the junction tree algorithm, and approximate inference using loopy belief propagation or Gibbs sampling. Learning can be divided along many axes: parameter or structure, directed or undirected, fully observed or partially observed, batch or online, discriminative or maximum likelihood, among others. First, the system performs data normalization and filtering for the accelerometers and EMG sensors that detect patient movements and muscle strength. The data can include indoor positioning information, 3D acceleration information, or EMG/EKG/EEG data, for example. The data can be processed using wavelet as discussed above or using any suitable normalization/filtering techniques. Next, the system performs parameterization and discretization. The Bayesian network is adapted in accordance with a predefined network topology. The system also defines conditional probability distributions. The system then generates the probability of event P(y), under various scenarios. Training data is acquired and a training method is built for the Bayesian network engine. Next, the system tunes model parameters and performs testing on the thus formed Bayesian network.

[0316] In one embodiment, a housing (such as a strap, a wrist-band, or a patch) provides a plurality of sensor contacts for EKG and/or EMG. The same contacts can be used for detecting EKG or EMG and can be placed as two parallel contacts (linear or spot shape) on opposite sides of the band, two adjacent parallel contacts on the inner surface of the band, two parallel adjacent contacts on the back of the wrist-watch, or alternatively one contact on the back of the watch and one contact on the wrist-band. The outputs of the differential contacts are filtered to remove motion artifacts. The differential signal is captured, and suitably filtered using high pass/low pass filters to remove noise, and digitized for signal processing. In one embodiment, separate amplifiers are used to detect EKG (between 50 mHz and 200 Hz) and for EMG (between 10 Hz and 500 Hz). In another embodiment, one common amp is used for both EKG/EMG, and software filter is applied to the digitized signal to extract EKG and EMG signals, respectively. The unit can apply Wavelet processing to convert the signal into the frequency domain and apply recognizers such as Bayesian, NN or HMM to pull the EMG or EKG signals from noise. The system uses a plurality of wireless nodes to transmit position and to triangulate with the mobile node to determine position. 3D accelerometer outputs can be integrated to provide movement vectors and positioning information. Both radio triangulation and accelerometer data can confirm the position of the patient. The RF signature of a plurality of nodes with known position can be used to detect proximity to a particular node with a known position and the patient's position can be extrapolated therefrom.

[0317] In one embodiment, Analog Device's AD627, a micro-power instrumentation amplifier, is used for differential recordings while consuming low power. In dual supply mode, the power rails Vs can be as low as ±1.1 Volt, which is ideal for battery-powered applications. With a maximum quiescent current of 85 μA (60 μA typical), the unit can operate continuously for several hundred hours before requiring battery replacement. The batteries are lithium cells providing 3.0V to be capable of recording signals up to +1 mV to provide sufficient margin to deal with various artifacts such as offsets and temperature drifts. The amplifier's reference is connected to the analog ground to avoid additional power consumption and provide a low impedance connection to maintain the high CMRR. To generate virtual ground while providing low impedance at the amplifier's reference, an

additional amplifier can be used. In one implementation, the high-pass filtering does not require additional components since it is achieved by the limits of the gain versus frequency characteristics of the instrumentation amplifier. The amplifier has been selected such that with a gain of 60 dB, a flat response could be observed up to a maximum of 100 Hz with gain attenuation above 100 Hz in one implementation. In another implementation, a high pass filter is used so that the cut-off frequency becomes dependent upon the gain value of the unit. The bootstrap AC-coupling maintains a much higher CMRR so critical in differential measurements. Assuming that the skin-electrode impedance may vary between 5 K- and 10 K-ohms, 1 M-ohm input impedance is used to maintain loading errors below acceptable thresholds between 0.5% and 1%.

[0318] When an electrode is placed on the skin, the detection surfaces come in contact with the electrolytes in the skin. A chemical reaction takes place which requires some time to stabilize, typically in the order of a few seconds. The chemical reaction should remain stable during the recording session and should not change significantly if the electrical characteristics of the skin change from sweating or humidity changes. The active electrodes do not require any abrasive skin preparation and removal of hair. The electrode geometry can be circular or can be elongated such as bars. The bar configuration intersects more fibers. The inter detection-surface distance affects the bandwidth and amplitude of the EMG signal; a smaller distance shifts the bandwidth to higher frequencies and lowers the amplitude of the signal. An inter detection-surface of 1.0 cm provides one configuration that detects representative electrical activity of the muscle during a contraction. The electrode can be placed between a motor point and the tendon insertion or between two motor points, and along the longitudinal midline of the muscle. The longitudinal axis of the electrode (which passes through both detection surfaces) should be aligned parallel to the length of the muscle fibers. The electrode location is positioned between the motor point (or innervation zone) and the tendinous insertion, with the detection surfaces arranged so that they intersect as many muscle fibers as possible.

[0319] In one embodiment, a multi-functional bio-data acquisition provides programmable multiplexing of the same differential amplifiers for extracting EEG (electroencephalogram), ECG (electrocardiogram), or EMG (electromyogram) waves. The system includes an AC-coupled chopped instrumentation amplifier, a spike filtering stage, a constant gain stage, and a continuous-time variable gain stage, whose gain is defined by the ratio of the capacitors. The system consumes microamps from 3V. The gain of the channel can be digitally set to 400, 800, 1600 or 2600. Additionally, the bandwidth of the circuit can be adjusted via the bandwidth select switches for different biopotentials. The high cut-off frequency of the circuit can be digitally selected for different applications of EEG acquisition.

[0320] In another embodiment, a high-resolution, rectangular, surface array electrode-amplifier and associated signal conditioning circuitry captures electromyogram (EMG) signals. The embodiment has a rectangular array electrode-amplifier followed by a signal conditioning circuit. The signal conditioning circuit is generic, i.e., capable of receiving inputs from a number of different/interchangeable EMG/EKG/EEG electrode-amplifier sources (including from both monopolar and bipolar electrode configurations). The electrode-amplifier is cascaded with a separate signal conditioner minimizes noise and motion artifact by buffering the EMG signal near the source (the amplifier presents a very high impedance input to the EMG source, and a very low output impedance); minimizes noise by amplifying the EMG signal early in the processing chain (assuming the electrode-amplifier includes signal gain) and minimizes the physical size of this embodiment by only including a first amplification stage near the body. The signals are digitized and transmitted over a wireless network such as WiFI, Zigbee, or Bluetooth transceivers and processed by the base station that is remote from the patient. For either high-resolution monopolar arrays or classical bipolar surface electrode-amplifiers, the output of the electrode-amplifier is a single-ended signal (referenced to the isolated reference). The electrode-amplifier transduces and buffers the EMG signal, providing high gain without causing saturation due to either offset potentials or motion artifact. The signal conditioning circuit provides selectable gain (to magnify the signal up to the range of the data recording/monitoring instrumentation, high-pass filtering (to attenuate motion artifact and any offset potentials), electrical isolation (to prevent injurious current from entering the subject) and low-pass filtering (for anti-aliasing and to attenuate noise out of the physiologic frequency range).

[0321] FIGS. **17**B and **17**C shows exemplary sEMG outputs from a differential amplifier to detect muscle strength. FIG. **17**B shows the left and right body EMG signals for the patient in a normal state, while FIG. **17**C illustrates a patient with degraded muscle capability. In general, muscle fire in a smooth fashion in normal individuals, with little irritability or fasiculation. Muscles fire symmetrically in healthy state when comparing left and right sides in motion. In general, healthy patients show a greater consistency in muscle patterns than injured patients, with the injured showing a greater increase in variability. Such variations are detected by EMG analyzers.

[0322] The EMG signal can be rectified, integrated a specified interval of and subsequently forming a time series of the integrated values. The system can calculate the root-mean-squared (rms) and the average rectified (avr) value of the EMG signal. The system can also determine muscle fatigue through the analysis of the frequency spectrum of the signal. The system can also assess neurological diseases which affect the fiber typing or the fiber cross-sectional area of the muscle. Various mathematical techniques and Artificial Intelligence (AI) analyzer can be applied. Mathematical models include wavelet transform, time-frequency approaches, Fourier transform, Wigner-Ville Distribution (WVD), statistical measures, and higher-order statistics. AI approaches towards signal recognition include Artificial Neural Networks (ANN), dynamic recurrent neural networks (DRNN), fuzzy logic system, Genetic Algorithm (GA), and Hidden Markov Model (HMM).

[0323] A single-threshold method or alternatively a double threshold method can be used which compares the EMG signal with one or more fixed thresholds. The embodiment is based on the comparison of the rectified raw signals and one or more amplitude thresholds whose value depends on the mean power of the background noise. Alternatively, the system can perform spectrum matching instead of waveform matching techniques when the interference is induced by low frequency baseline drift or by high frequency noise.

[0324] EMG signals are the superposition of activities of multiple motor units. The EMG signal can be decomposed to reveal the mechanisms pertaining to muscle and nerve con-

trol. Decomposition of EMG signal can be done by wavelet spectrum matching and principle component analysis of wavelet coefficients where the signal is de-noised and then EMG spikes are detected, classified and separated. In another embodiment, principle components analysis (PAC) for wavelet coefficients is used with the following stages: segmentation, wavelet transform, PCA, and clustering. EMG signal decomposition can also be done using non-linear least mean square (LMS) optimization of higher-order cumulants.

[0325] Time and frequency domain approaches can be used. The wavelet transform (WT) is an efficient mathematical tool for local analysis of non-stationary and fast transient signals. One of the main properties of WT is that it can be implemented by means of a discrete time filter bank. The Fourier transforms of the wavelets are referred as WT filters. The WT represents a very suitable method for the classification of EMG signals. The system can also apply Cohen class transformation, Wigner-Ville distribution (WVD), and Choi-Williams distribution or other time-frequency approaches for EMG signal processing.

[0326] In Cohen class transformation, the class time-frequency representation is particularly suitable to analyze surface myoelectric signals recorded during dynamic contractions, which can be modeled as realizations of nonstationary stochastic process. The WVD is a time-frequency that can display the frequency as a function of time, thus utilizing all available information contained in the EMG signal. Although the EMG signal can often be considered as quasi-stationary there is still important information that is transited and may be distinguished by WVD. Implementing the WVD with digital computer requires a discrete form. This allows the use of fast Fourier transform (FFT), which produces a discrete-time, discrete-frequency representation. The common type of time frequency distribution is the Short-time Fourier Transform (STFT). The Choi-Williams method is a reduced interference distribution. The STFT can be used to show the compression of the spectrum as the muscle fatigue. The WVD has cross-terms and therefore is not a precise representation of the changing of the frequency components with fatigue. When walls appear in the Choi-William distribution, there is a spike in the original signal. It will decide if the walls contain any significant information for the study of muscle fatigue. In another embodiment, the autoregressive (AR) time series model can be used to study EMG signal. In one embodiment, neural networks can process EMG signal where EMG features are first extracted through Fourier analysis and clustered using fuzzy c-means algorithm. Fuzzy c-means (FCM) is a method of clustering which allows data to belong to two or more clusters. The neural network output represents a degree of desired muscle stimulation over a synergic, but enervated muscle. Error-back propagation method is used as a learning procedure for multilayered, feedforward neural network. In one implementation, the network topology can be the feed-forward variety with one input layer containing 256 input neurodes, one hidden layer with two neurodes and one output neurode. Fuzzy logic systems are advantageous in biomedical signal processing and classification. Biomedical signals such as EMG signals are not always strictly repeatable and may sometimes even be contradictory. The experience of medical experts can be incorporated. It is possible to integrate this incomplete but valuable knowledge into the fuzzy logic system, due to the system's reasoning style, which is similar to that of a human being. The kernel of a fuzzy system is the fuzzy inference engine. The knowledge of an expert or well-classified examples are expressed as or transferred to a set of "fuzzy production rules" in the form of IF-THEN, leading to algorithms describing what action or selection should be taken based on the currently observed information. In one embodiment, higher-order statistics (HOS) is used for analyzing and interpreting the characteristics and nature of a random process. The subject of HOS is based on the theory of expectation (probability theory).

[0327] In addition to stroke detection, EMG can be used to sense isometric muscular activity (type of muscular activity that does not translate into movement). This feature makes it possible to define a class of subtle motionless gestures to control interface without being noticed and without disrupting the surrounding environment. Using EMG, the user can react to the cues in a subtle way, without disrupting their environment and without using their hands on the interface. The EMG controller does not occupy the user's hands, and does not require them to operate it; hence it is "hands free". The system can be used in interactive computer gaming which would have access to heart rate, galvanic skin response, and eye movement signals, so the game could respond to a player's emotional state or guess his or her level of situation awareness by monitoring eye movements. EMG/EEG signal can be used for man-machine interfaces by directly connecting a person to a computer via the human electrical nervous system. Based on EMG and EEG signals, the system applies pattern recognition system to interpret these signals as computer control commands. The system can also be used for Mime Speech Recognition which recognizes speech by observing the muscle associated with speech and is not based on voice signals but EMG. The MSR realizes unvoiced communication and because voice signals are not used, MSR can be applied in noisy environments; it can support people without vocal cords and aphasics. In another embodiment, EMG and/or electroencephalogram (EEG) features are used for predicting behavioral alertness levels. EMG and EEG features were derived from temporal, frequency spectral, and statistical analyses. Behavioral alertness levels were quantified by correct rates of performance on an auditory and a visual vigilance task, separately. A subset of three EEG features, the relative spectral amplitudes in the alpha (alpha %, 8-13 Hz) and theta (theta %, 4-8 Hz) bands, and the mean frequency of the EEG spectrum (MF) can be used for predicting the auditory alertness level.

[0328] In yet a further embodiment for performing motor motion analysis, an HMM is used to determine the physical activities of a patient, to monitor overall activity levels and assess compliance with a prescribed exercise regimen and/or efficacy of a treatment program. The HMM may also measure the quality of movement of the monitored activities. For example, the system may be calibrated or trained in the manner previously described, to recognize movements of a prescribed exercise program. Motor function information associated with the recognized movements may be sent to the server for subsequent review. A physician, clinician, or physical therapist with access to patient data may remotely monitor compliance with the prescribed program or a standardized test on motor skill. For example, patients can take the Wolf Motor Function test and acceleration data is captured on the following tasks:

[0329] placing the forearm on a table from the side

[0330] moving the forearm from the table to a box on the table from the side

[0331] extending the elbow to the side

[0332] extending the elbow to the side against a light weight

[0333] placing the hand on a table from the front

[0334] moving the hand from table to box

[0335] flexing the elbow to retrieve a light weight

[0336] lifting a can of water

[0337] lifting a pencil, lifting a paper clip

[0338] stacking checkers, flipping cards

[0339] turning a key in a lock

[0340] folding a towel

[0341] lifting a basket from the table to a shelf above the table.

[0342] In one embodiment, the patient information is used for diagnosis and for prescription filling. The patient information can be secured using suitable encryption or other security mechanism such as going through a virtual private network (VPN). In one embodiment, the information is secured to conform to the requirements of Health Insurance Portability and Accountability Act (HIPAA). Also, the system can file electronic claims using the HIPAA standards for medical claims with subtypes for Professional, Institutional, and Dental varieties. The system can automatically provide eligibility inquiry and claim status inquiry, among others.

[0343] Next, the system sends the secured patient medical information from the patient computer to a remote computer. A professional such as a doctor or physician assistant or nurse can then remotely examine the patient and review the patient medical information during the examination. During such remotely examination, the professional can listen to the patient's organ with a digital stethoscope, scan a video of the patient, run a diagnostic test on the patient such as blood pressure or sugar level check, for example. The professional can also verbally communicate with the patient over the Internet. Typical examination procedures may include a review of the patient's temperature, examination of the ears, eyes, throat, skin tone, chest cavity and abdominal cavity.

[0344] The system can run a plurality of medical rules to assist the professional in arriving at a diagnosis or to confirm the diagnosis. Typically, the majority of medical problems fall into several general categories, such as ear infections, respiratory problems that might include asthma, headaches, sore throats, skeletal injuries, and superficial cuts and abrasions. For common illnesses, the diagnosis and treatment are routine and well known. Certain tests or procedures during the examination are routine, relating to certain criteria. Typically, most patients exhibit similar characteristics and share many common physical conditions. For example, a positive strep test would result in general medications being administered, with patient's having allergic reactions to penicillin being given alternative treatment medications. In another example, the expert system recommends treatments based on the frequency or reoccurrence of similar conditions/treatment in a population. For example, strep may be determined where a sibling has strep, and the same conditions are manifested in the patient being examined, thus leading to the diagnosis of strep without having a test performed to corroborate the diagnosis. A person having been diagnosed with a sinus infection would typically be prescribed a strong antibiotic. Using an expert system to assist in diagnosing and prescribing treatment, the system can identify and propose the treatment of generic or standard problems in a streamlined manner and allowing professionals to focus on complex problems.

[0345] In one embodiment, the expert system prompts the patient or the professional to describe the symptoms and chief complaints into generalized groups that can include Accidents-poisonings, Fever, Headache-Throat pain, Chest pain, Abdominal pain, Lumbar pain, Dizziness-Nausea-Vomit, Hemorrhages, Skin modifications, Palpitations, Obstetrics-gynecology, for example. Next, the system associates each chief complaint with a set of signs/symptoms in order to establish the medical case significance and the prioritization of each patient session. On the professional's screen is displayed the set of possible signs/symptoms associated to the chief complaint and by using key questions, the professional selects the signs/symptoms best fitted with what the patient declares.

[0346] The system provides guidelines of practice standard that can be presented to a professional who might be faced with a particular condition in a patient. The system provides guidelines and practice standards for various general categories of cardiovascular, endocrinology, general, gastrointestinal, hematology, infectious diseases, neurology, pharmacology, pulmonary, renal, surgery, toxicology, trauma, for example. A relational database stores a plurality of decision support algorithms and prompts treating professionals such as doctors to provide care to patients based upon the any of the decision support algorithms. The system includes algorithms for treating Acalculous Cholecystitis, Acute Pancreatitis Algorithms, Acute Renal Failure-Diagnosis, Acute Renal Failure-Management & Treatment, Adrenal Insufficiency. Agitation and Anxiety, Depression & Withdrawal, Aminoglycoside Dosing and Therapeutic Monitoring, an Amphotericin-B Treatment Guidelines, Analgesia, Antibiotic Classification & Costs, Antibiograms Algorithm, Antibiotic associated Colitis Algorithm, ARDS: Hemodynamic Management, ARDS: Steroid Use, ARDS: Ventilator Strategies, Asthma, Bleeding Patient, Bloodstream Infections, Blunt Cardiac Injury, Bradyarrhythmias, Brain Death, Bronchodilator Use in Ventilator Patients, Bronchoscopy & Thoracentesis Guidelines, Candiduria, Cardiogenic Shock, CardioPulmonary Resuscitation Guideline, Catheter Related Septicemia, a Catheter Replacement Strategies, Cervical Cord Injury, Congestive Heart Failure, COPD Exacerbation & Treatment, CXR (Indications), Dealing with Difficult patients and families, Diabetic Ketoacidosis, Dialysis, Diuretic Use, Drug Changes with Renal Dysfunction, Emergency Cardiac Pacing, Endocarditis Diagnosis and Treatment, Endocarditis Prophylaxis, End of Life Decisions, Endotracheal Tubes & Tracheotomy, Ethical Guidelines, Febrile Neutropenia, FUO, Fluid Resuscitation, Guillain-Barre Syndrome, Heparin, Heparin-Induced Thrombocytopenia, Hepatic Encephalopathy, Hepatic Failure, HIV+ Patent Infections, Hypercalcemia Diagnosis and Treatment, Hypercalcemia Insulin Treatment, Hyperkalemia: Etiology & Treatment, Hypernatremia: Etiology & Treatment, Hypertensive Crisis, Hypokalemia: Etiology & Treatment, Hyponatremia: Etiology & Treatment, Hypothermia, Identification of Cervical Cord Injury, Implantable Cardio-defibrillator, Intra-Aortic Balloon Device, Intracerebral Hemorrhage, Latex Allergy, Magnesium Administration, Management of Hypotension, Inotropes, Management of Patients with Ascites, Empiric Meningitis, Meningitis, a Myasthenia Gravis, Myocardial Infarction, Myocardial Infarction with left bundle branch block, Necrotizing Soft Tissue Infections, Neuromuscular Blockers, Neuromuscular Complications of Critical Illness, Non-Infectious Causes of Fever, Non-Traumatic Coma, Noninvasive Modes of Ventilation, Nutritional Management, Obstetrical Complication, Olig-

uria, Open Fractures, Ophthalmic Infections, Organ Procurement Guidelines, PA Catheter Guideline and Troubleshooting, Pancreatitis, Penetrating Abdominal Injury, Penetrating Chest Injury, Penicillin Allergy, Permanent Pacemaker and Indications, Pneumonia Community Acquired, Pneumonia Hospital Acquired, Post-Op Bleeding, Post-Op Hypertension, Post-Op Management of Abdominal Post-Op Management of Carotid, Post-Op Management of Open Heart, Post-Op Management of Thoracotomy, Post-Op Myocardial Ischemia (Non-Cardiac Arrhythmias after Cardiac Surgery), Post-Op Power Weaning, Pressure Ulcers, Pulmonary Embolism Diagnosis, Pulmonary Embolism Treatment, Respiratory Isolation, Sedation, Seizure, Status Epilepticus, Stroke, Sub-Arachnoid Hemorrhage, Supra-Ventricular Tachyarrythmia, Supra-Ventricular Tachycardia, Wide Complex QRS Tachycardia, Therapeutic Drug Monitoring, Thrombocytopenia, Thrombolytic Therapy, Transfusion Guidelines, Traumatic Brain Injury, Assessment of Sedation, Sedation, Septic Shock, Bolus Sliding, Scale Midazolam, Short Term Sedation Process, Sinusitis, SIRS, Spinal Cord Injury, Steroid Replacement Strategy, Thyroid Disease, Transplant Infection Prophylaxis, Transplant Related Infections, Treatment of Airway Obstruction, Unknown Poisoning, Unstable Angina, Upper GI Bleeding Stress Prophylaxis, Vancomycin, Upper GI Bleeding Non-Variceal, Upper GI Bleeding Variceal, Use of Hematopoiectic Growth Factors, Ventilator Weaning, Ventilator Weaning Protocol, Venous Thrombosis Diagnosis and Treatment, Venous Thromboembolism Prophylaxis, Ventricular Arrythmia, Warfarin, Warfarin Dosin, and Wound Healing Strategies, among others. More details on the exemplary expert system are disclosed in U.S. Pat. No. 6,804,656, the content of which is incorporated by reference.

[0347] The expert system can recommend medication prescriptions based on a dosage related to age or weight. For example, a patient that has been diagnosed as having a sore throat that has existed for a certain period of time might be prescribed as receiving antibiotic A, which would be a common antibiotic that would be given in a great majority of similar cases. If medical history showed recent use of antibiotic A, then antibiotic B might be the prevalent choice, and be automatically prescribed. Likewise, a patient that has been diagnosed as having a sore throat with a confirmed presence of strep would receive medication C, or a non penicillin derivative medication D if the patient was allergic to penicillin. Following diagnosis, determination is made as to whether or not medications are prescribed based on drug interaction or drug pharmaco-genetic information, and if medications are so prescribed, then this information is stored in the database and transmitted to a remote pharmacy, which prepares the prescription medication.

[0348] In one embodiment, the expert system applies a predetermined fee for each type of diagnoses and treatments based on the frequency or reoccurrence of similar conditions/treatment in a population. For example, a diagnosis of strep would necessarily have included in it the costs of laboratory tests that would be necessary in a certain percentage of the patients. Whether or not the test is performed may be irrelevant, since it is included in the set fee in relation to the frequency used to establish the average cost for the diagnosis. Where pneumonia has been detected, as part of the patient diagnosis, a standardized fixed cost would include the typical x-ray costs that would normally be incurred by a certain percentage of patients that receive such a diagnosis. In such a pricing method, the incentive to order expensive tests without sufficient reason is removed, since the typical tests that are to be performed is automatically factored in to the costs for each patient with a similar diagnosis. The patient's fees and costs are directly routed to the database.

[0349] While this invention has been particularly shown and described with references to preferred embodiments thereof, it will be understood by those skilled in the art that various changes in form and details may be made therein without departing from the spirit and scope of the invention as defined by the appended claims.

What is claimed is:

1. A method of automatically requesting assistance for a patient, comprising:

wearing a wireless device with one or more accelerometers on the patient to detect patient motion;

using body signature sequences generated from outputs of the one or more accelerometer to detect a fall; and

automatically requesting assistance using a telephone for the patient if needed.

2. The method of claim **1**, comprising detecting if the patient has fallen based on a plurality of accelerometer signals and indicating the fall if the accelerometer signals indicate that the patient is unable to get up.

3. The method of claim **1**, comprising estimating an indoor location of the wireless device based on detection of local wireless signals.

4. The method of claim **1**, comprising distinguishing between falls and other types of normal body movement.

5. The method of claim **1**, comprising notifying an emergency service for assistance automatically without a user pressing a button to call for help.

6. The method of claim **1**, comprising reading outputs of one or more accelerometers in the wireless device to detect the fall and calling for assistance using the wireless device.

7. The method of claim **1**, comprising detecting a fall, sending an alert to a call center which contacts the patient to confirm if a responder can assist and sending local emergency services if needed.

9. The method of claim **1**, comprising capturing movement activities and comparing the movement activities to one or more fall patterns and determining if a fall has occurred.

10. The method of claim **1**, comprising detecting the fall by analyzing changes in height and accelerations associated with the changes in height.

11. The method of claim **1**, comprising confirming the fall by having a call center contact the patient using the wireless device and requesting help if needed.

12. The system of claim **1**, wherein the wireless device sends accelerometer patterns to a remote processor to detect falls to conserve battery power.

13. The method of claim **1**, wherein patient motions form a sequence of elemental motions, comprising:

identifying each elemental motion of a sequence of elemental motions of the accelerometer; and

identifying the activity of the patient, comprising matching the sequence of identified elemental motions with a library of stored sequences of elemental motions, wherein each stored sequence of elemental motions corresponds with an activity.

14. The method of claim **1**, comprising identifying each elemental motion by:

generating an acceleration signature based on sensed acceleration of the device;

matching the acceleration signature with at least one of a plurality of stored acceleration signatures, wherein each stored acceleration signatures corresponds with a type of motion;

identifying the type of motion of the device based on the matching of the acceleration signature with the stored acceleration signature.

15. The method of claim **1**, further comprising refining identification of the activity, comprising analyzing timing of the identified activity, analyzing at least one identified location of the identified activity, analyzing a rate of change of a location of the patient, or analyzing patterns of a plurality of identified activities.

16. The method of claim **1**, further comprising determining changes in height of the wireless device.

17. The method of claim **1**, further comprising determining acceleration of movements from a fall.

18. The method of claim **1**, further comprising

determining if the patient has fallen based on a plurality of sensor signals indicating changes in height or accelerations associated with the changes in height;

waiting for a predetermined period to detect if the patient can independently recover from the fall; and

requesting assistance if the sensor signals indicate that the patient is unable to independently recover from the fall.

19. The method of claim **1**, further comprising determining a predetermined time between the fall and when the patient gets up.

20. The method of claim **19**, further comprising determining a severity of the fall based on the predetermined time or based on one or more accelerometers' output magnitudes.

21. The method of claim **1**, further comprising determining the fall based on acceleration pattern characteristics of a fall.

22. A method to provide personal emergency response for a patient, comprising:

wearing a wireless device with at least one or more accelerometers on the patient to detect patient motion;

determining a fall based on detected motions;

waiting for a predetermined period to detect if the patient can recover from the fall and automatically requesting assistance using a telephone if the patient is unable to recover from the fall; and

requesting assistance for the patient if the patient pushes a button requesting assistance.

23. The method of claim **22**, comprising capturing location information.

24. The method of claim **22**, further comprising capturing location information from one or more wireless base station location data.

25. The method of claim **22**, further comprising capturing location information using a positioning system and wireless base station location data.

* * * * *