US007600912B2

(12) **United States Patent**
Leute et al.

(10) **Patent No.: US 7,600,912 B2**
(45) **Date of Patent: Oct. 13, 2009**

(54) **TEMPERATURE SENSITIVE LABEL FOR DETECTING TEMPERATURE CHANGES TO A TEMPERATURE SENSITIVE ITEM**

(75) Inventors: **Gerardo Leute**, Penfield, NY (US); **Paul Kevin Acquaviva**, Fairport, NY (US)

(73) Assignee: **Xerox Corporation**, Norwalk, CT (US)

(*) Notice: Subject to any disclaimer, the term of this patent is extended or adjusted under 35 U.S.C. 154(b) by 181 days.

(21) Appl. No.: **11/688,620**

(22) Filed: **Mar. 20, 2007**

(65) **Prior Publication Data**

US 2008/0232427 A1 Sep. 25, 2008

(51) **Int. Cl.**
G01K 1/14 (2006.01)

(52) **U.S. Cl.** **374/157**; 374/161; 374/162

(58) **Field of Classification Search** 374/161, 374/157, 162, 106
See application file for complete search history.

(56) **References Cited**

U.S. PATENT DOCUMENTS

5,323,652	A *	6/1994	Parker	73/295
5,326,174	A *	7/1994	Parker	374/134
5,667,303	A *	9/1997	Arens et al.	374/102
5,709,472	A *	1/1998	Prusik et al.	374/106
6,042,264	A *	3/2000	Prusik et al.	374/106
6,103,351	A *	8/2000	Ram et al.	428/195.1
6,214,623	B1 *	4/2001	Simons et al.	436/2
6,244,208	B1 *	6/2001	Qiu et al.	116/207
6,386,756	B1 *	5/2002	Rice	374/157
6,435,128	B2 *	8/2002	Qiu et al.	116/207
6,544,614	B1 *	4/2003	Huffer et al.	428/40.1
6,634,516	B2 *	10/2003	Carballido	215/230
6,848,390	B2 *	2/2005	Akers et al.	116/216
6,895,191	B2	5/2005	Rommelmann et al.	
7,063,041	B2 *	6/2006	Odashiro	116/217
2003/0188677	A1 *	10/2003	Akers et al.	116/216
2007/0053406	A1 *	3/2007	LaGuardia et al.	374/161
2007/0121702	A1 *	5/2007	LaGuardia et al.	374/150
2008/0056329	A1 *	3/2008	Smith et al.	374/106
2008/0142529	A1 *	6/2008	LaGuardia et al.	220/592.2
2008/0144699	A1 *	6/2008	Plevich et al.	374/162
2008/0215037	A1 *	9/2008	Petrakis	604/890.1

FOREIGN PATENT DOCUMENTS

JP	2003076278	A *	3/2003
WO	96/28714		9/1996

* cited by examiner

Primary Examiner—Andre J Allen
(74) *Attorney, Agent, or Firm*—MH2 Technology Law Group LLP

(57) **ABSTRACT**

A temperature sensitive label may be affixed to a temperature sensitive item. The temperature sensitive label conveys when the item has reached a tripping temperature. The tripping temperature may be a temperature at which the item is compromised. To convey this, the label changes properties and functions with a message to convey that the item has been exposed to the tripping temperature. For example, the label may reveal, block, or alter a message that conveys whether the item has been exposed to the tripping temperature. The message may be part of the label or separate from the label.

7 Claims, 8 Drawing Sheets

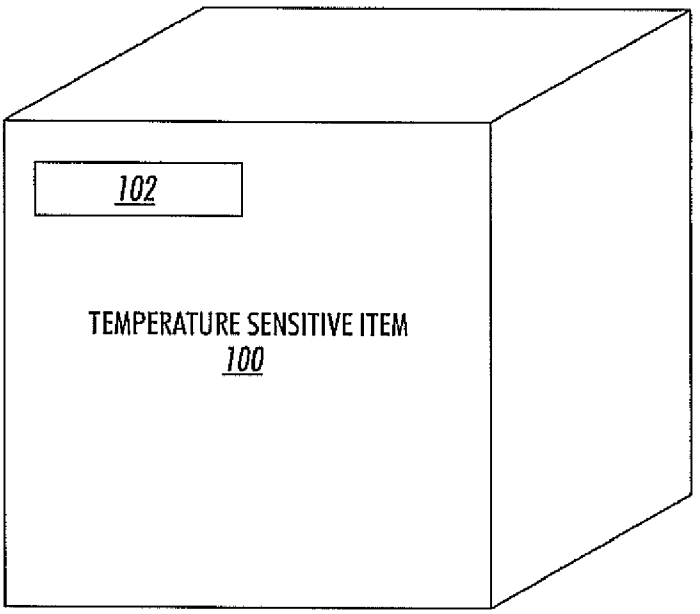

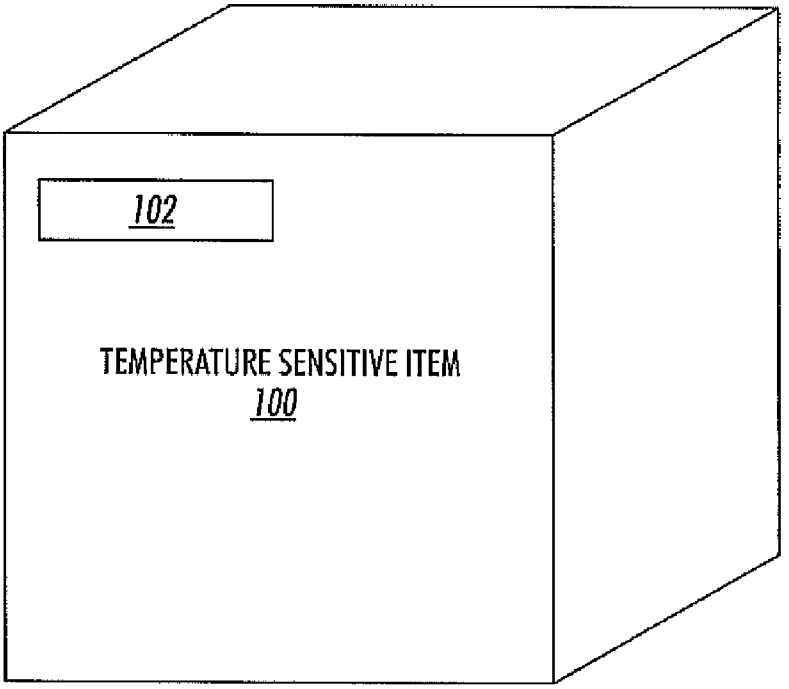
102
TEMPERATURE SENSITIVE ITEM
100

FIG. 1

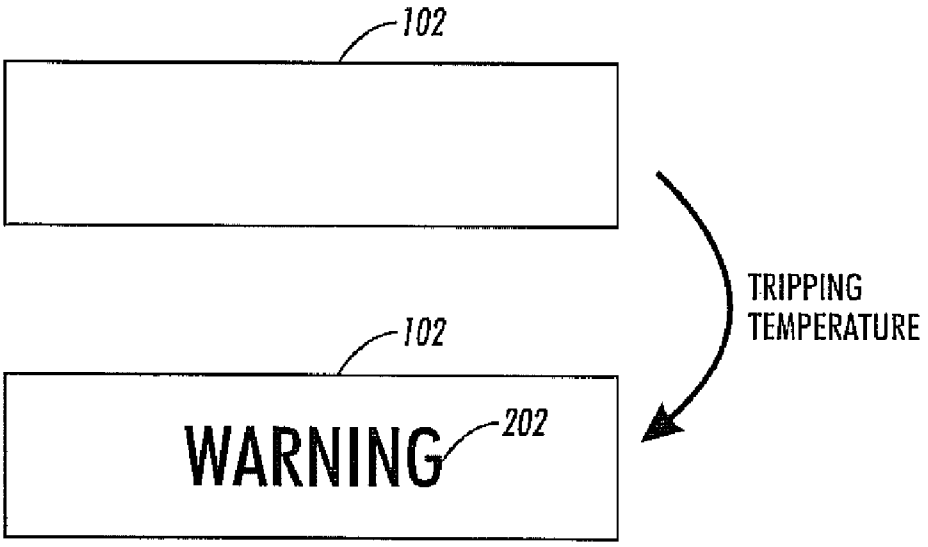
102
TRIPPING
TEMPERATURE
102
WARNING
202

FIG. 2

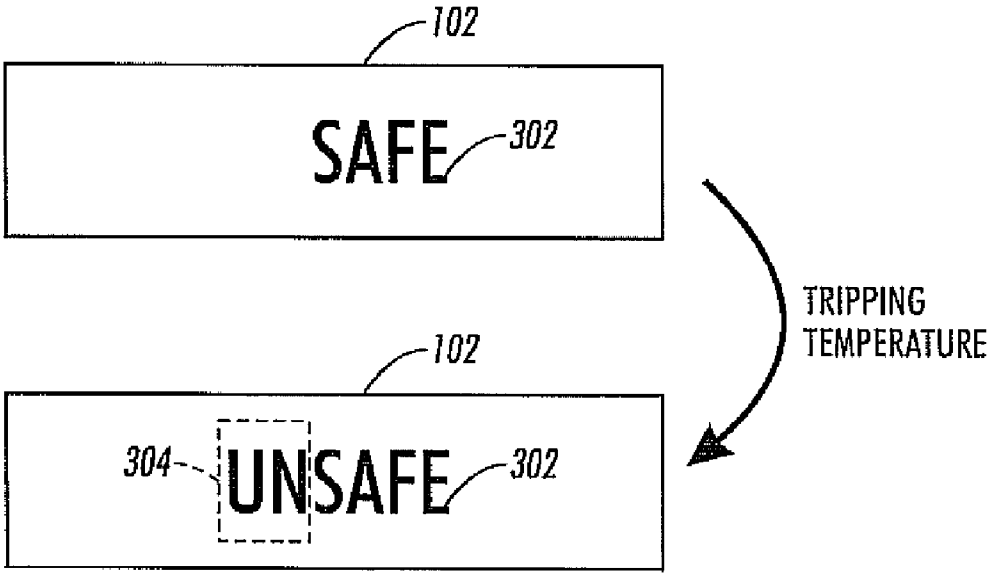
102
SAFE
302
TRIPPING
TEMPERATURE
102
304
UNSAFE
302

FIG. 3

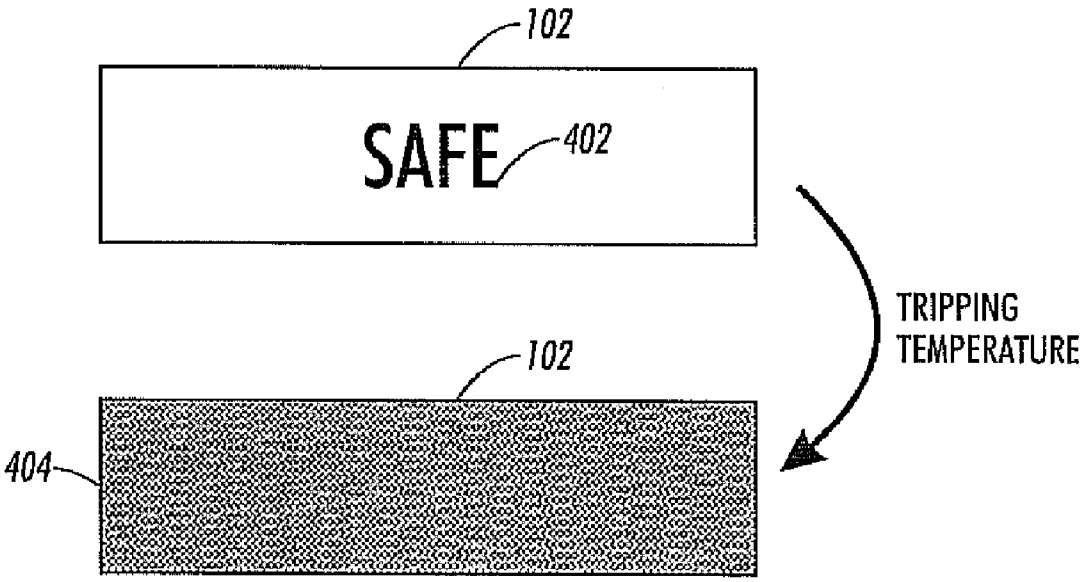
102
SAFE
402
TRIPPING
TEMPERATURE
102
404

FIG. 4

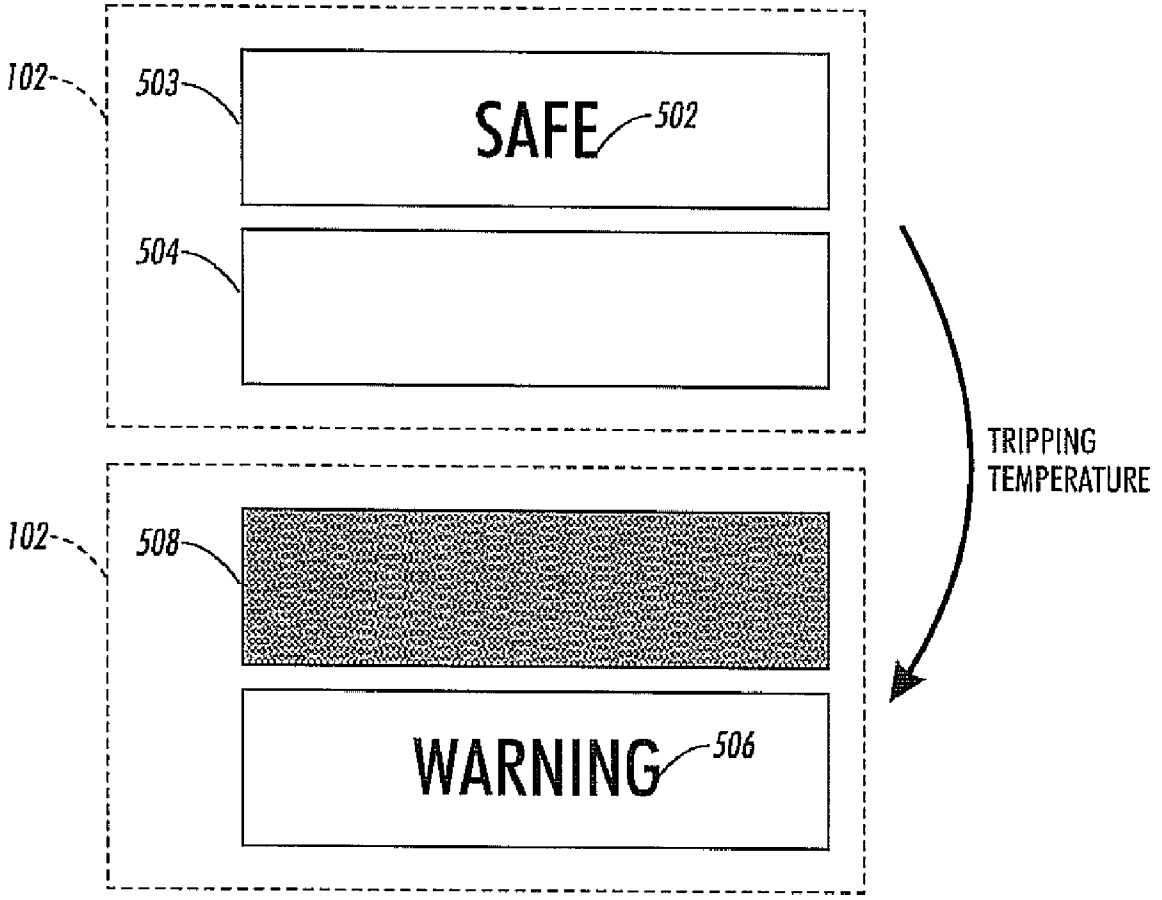
102
503
SAFE
502
504
TRIPPING
TEMPERATURE
102
508
WARNING
506

FIG. 5

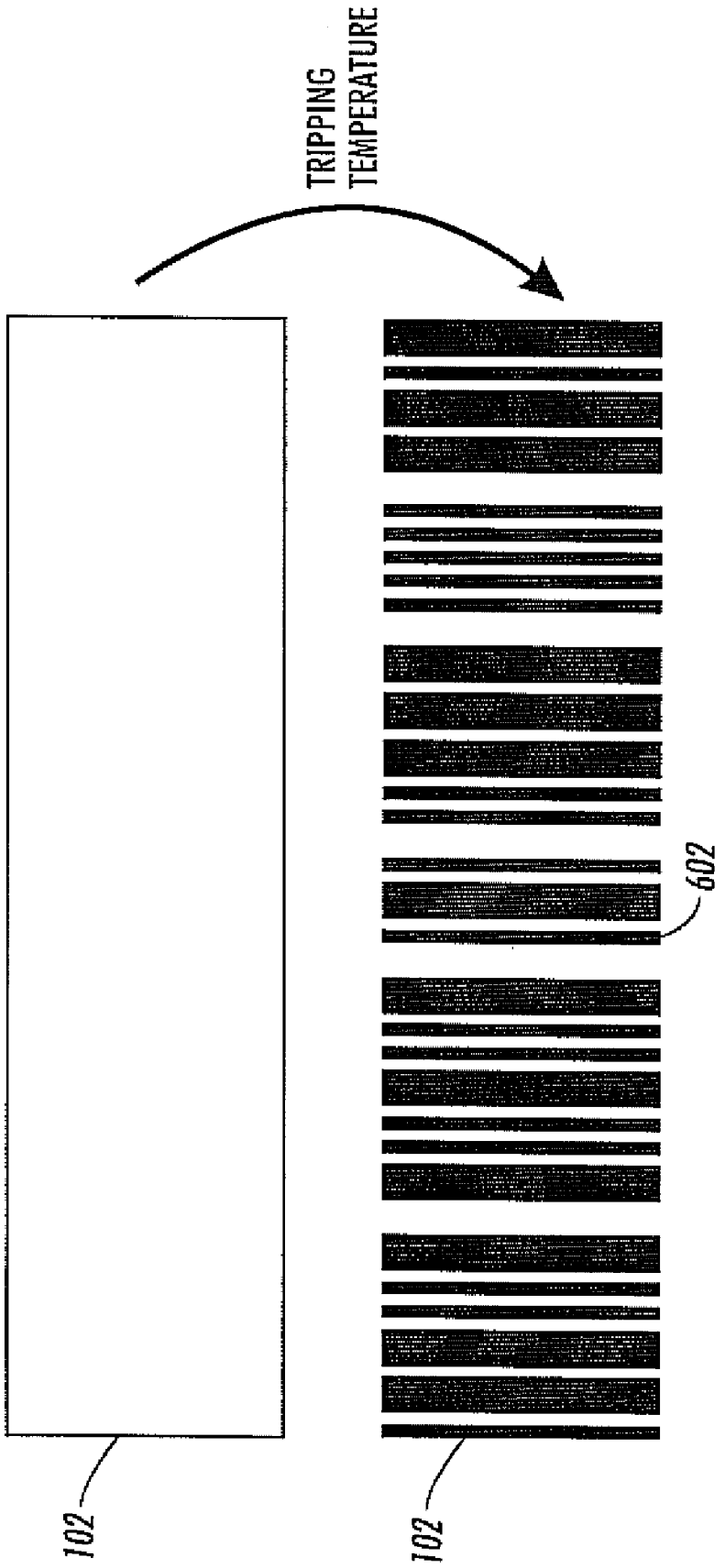

FIG. 6

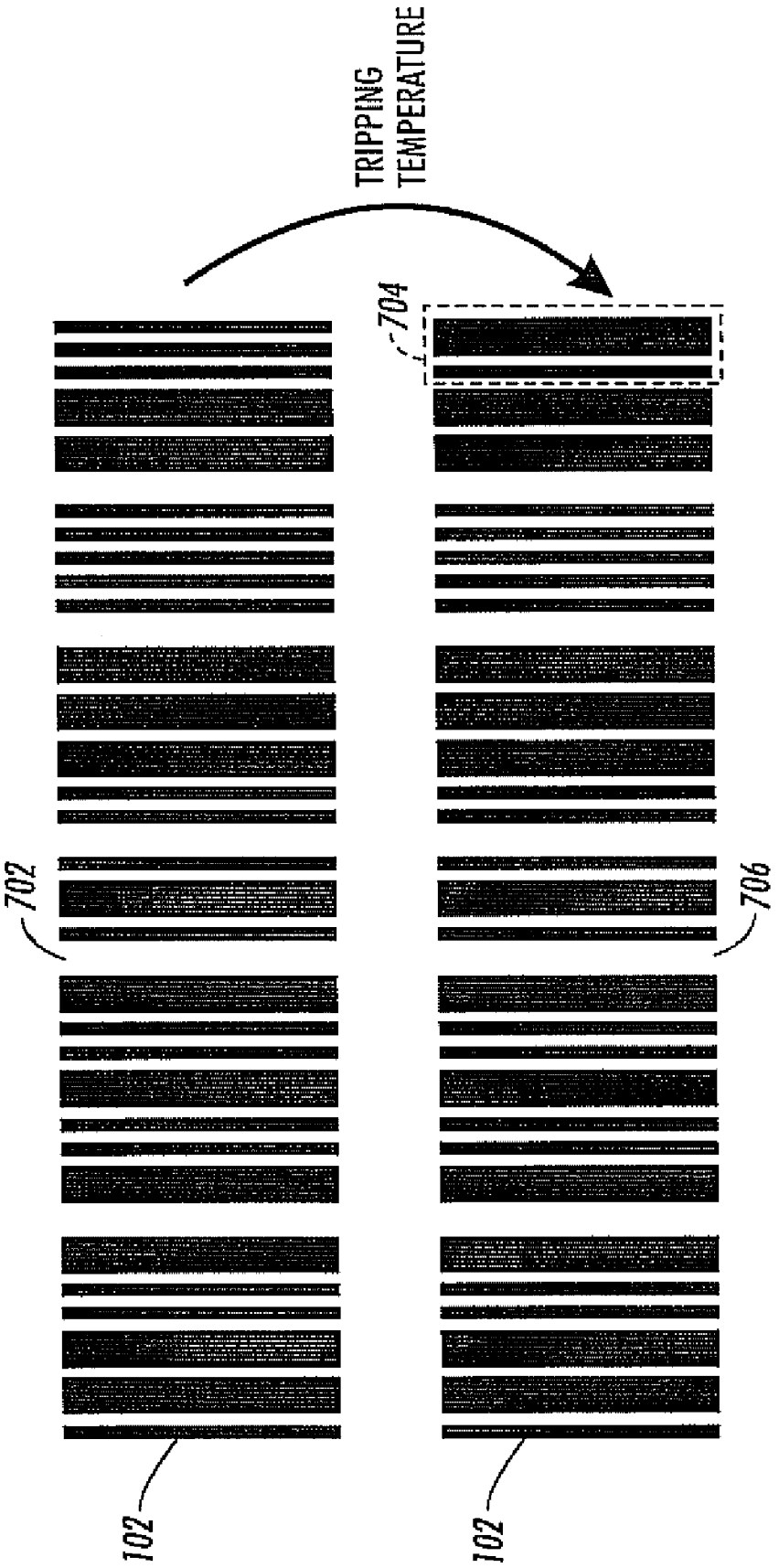

FIG. 7

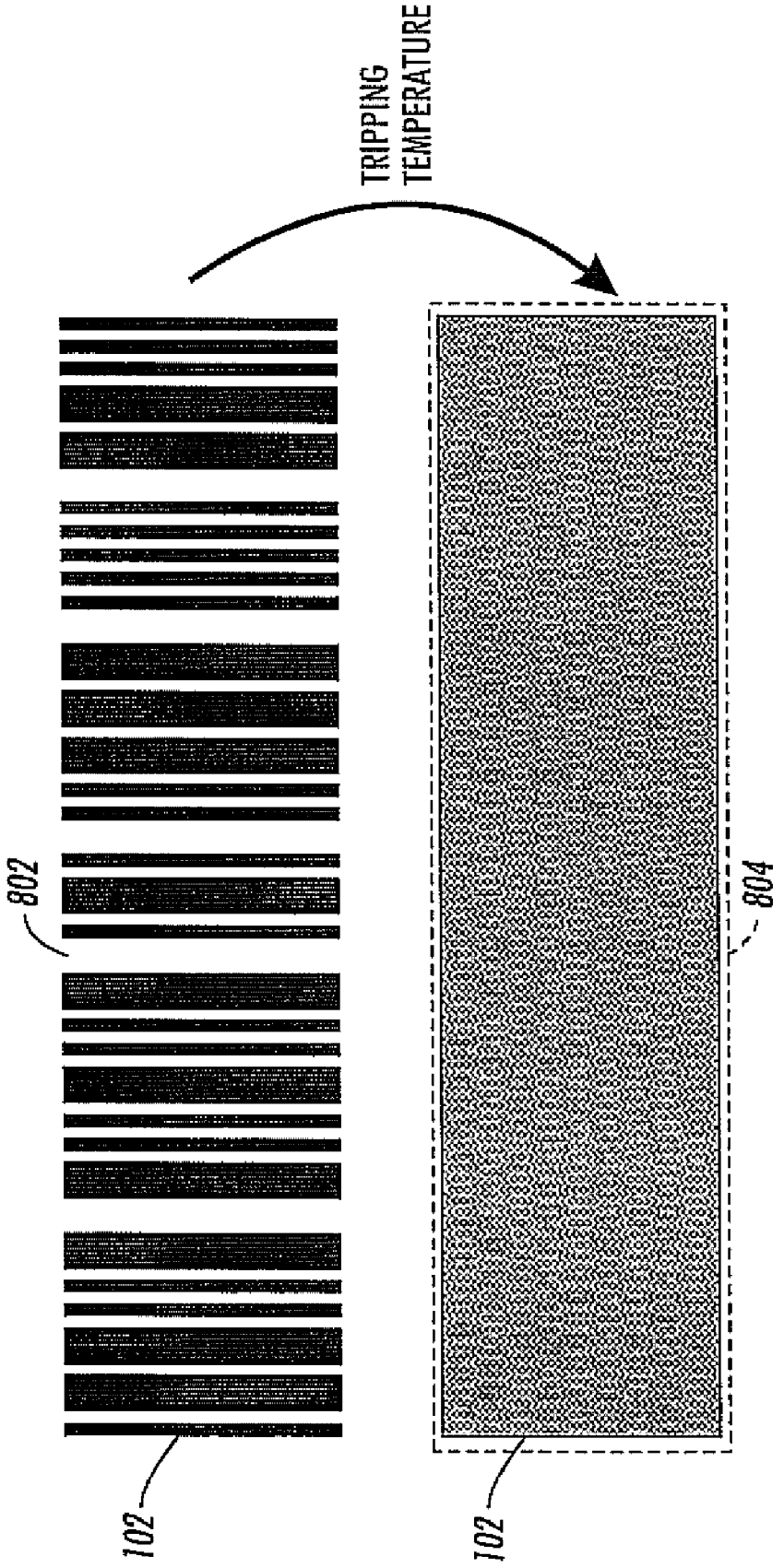

FIG. 8

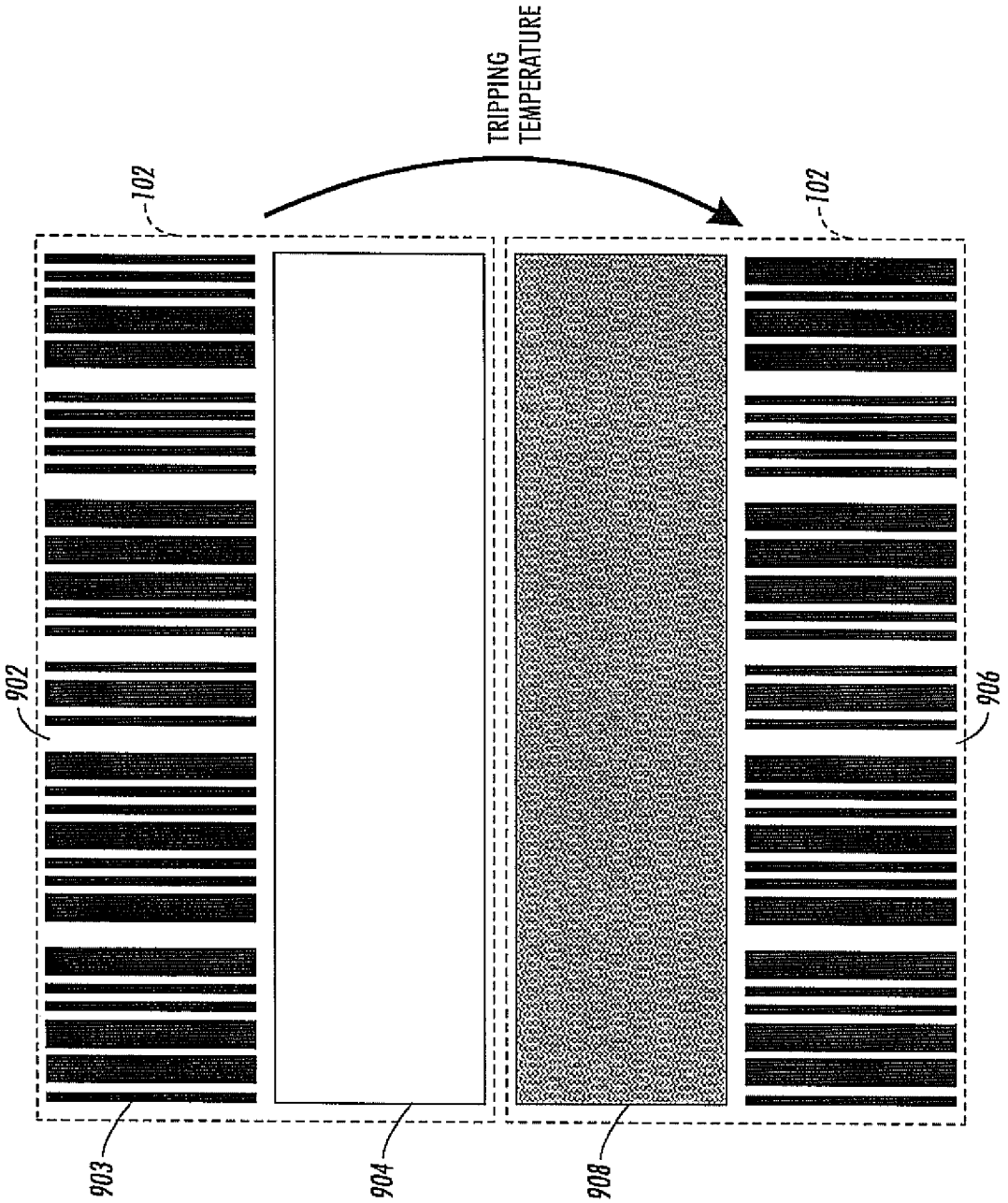

FIG. 9

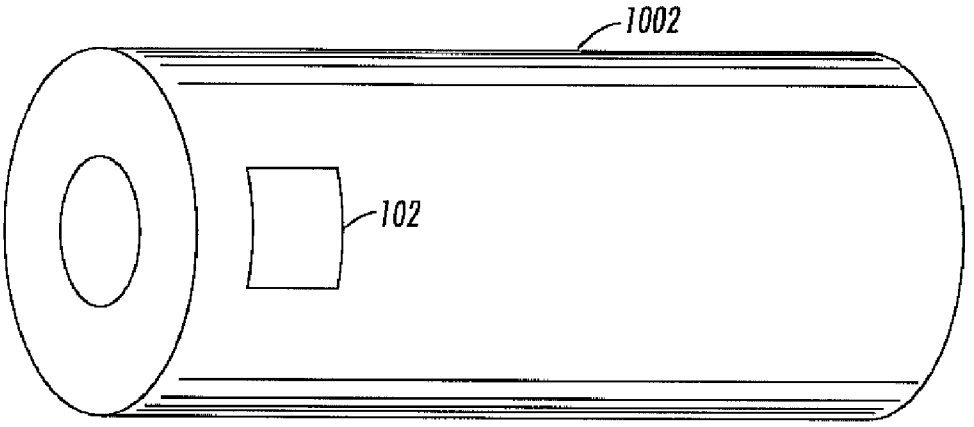

FIG. 10

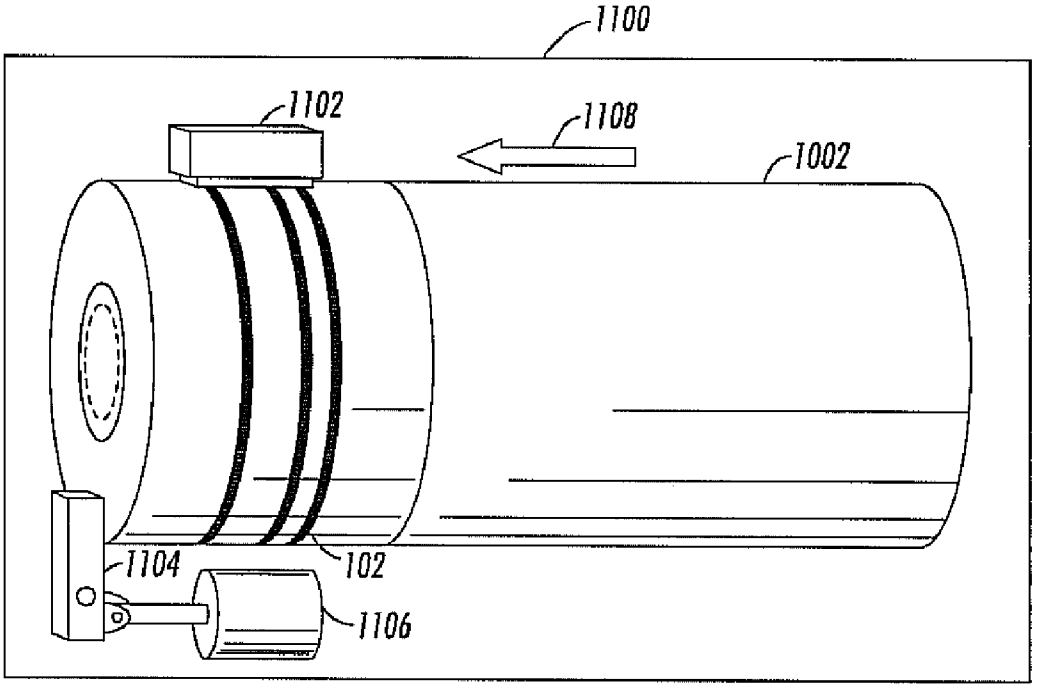

FIG. 11

TEMPERATURE SENSITIVE LABEL FOR DETECTING TEMPERATURE CHANGES TO A TEMPERATURE SENSITIVE ITEM

FIELD

This invention relates generally to labels.

BACKGROUND

Currently, many different types of products are susceptible to temperature changes. The temperature changes may either damage, compromise, or destroy the products. For example, food products may become spoiled or dangerous if subjected to temperatures above a certain level. Typically, these products may be subjected to temperature changes after manufacture such as during transport or storage. As such, a manufacturer may have no method for checking the product to determine if the product has been compromised. Further, a consumer using the product has no method for determining if the product has been comprised except for trying or using the product. However, blindly using the product may be dangerous to the consumer or could damage equipment used by the consumer.

For example, printer and copier products, such as toner/replenisher materials, are sensitive to high temperature extremes. Toner, in particular, can block or fuse together when subjected to these high temperatures. In such a case, the fused or blocked toner may cause machine operation problems. However, the compromised toner is not readily apparent until a problem with print quality occurs.

Accordingly, it is desirable to determine whether a product has been subjected to a compromising temperature without having to try the product.

SUMMARY

An embodiment of the present disclosure is directed to a label for identifying temperature change of an item. The label comprises a message identifying whether the item has been exposed to a temperature that may affect the item and a material capable of changing properties when exposed to the temperature. The material is positioned to function with the message to identify when the item has been exposed to the temperature.

Another embodiment of the present disclosure is directed to a label for identifying temperature change of an item. The label comprises a material capable of changing properties when exposed to a temperature. The material is positioned to function with a message to identify when the item has been exposed to the temperature.

Another embodiment of the present disclosure is directed to a toner container. The toner container comprises a housing for storing toner and a label for identifying temperature change of the toner container. The label comprises a material capable of changing properties when exposed to a temperature. The material is positioned to function with a message to identify when the item has been exposed to the temperature.

Additional embodiments of the present disclosure will be set forth in part in the description which follows, and in part will be obvious from the description, or may be learned by practice of the embodiments. The embodiments will be realized and attained by means of the elements and combinations particularly pointed out in the appended claims.

It is to be understood that both the foregoing general description and the following detailed description are exemplary and explanatory only and are not restrictive of the invention, as claimed.

BRIEF DESCRIPTION OF THE DRAWINGS

The accompanying drawings, which are incorporated in and constitute a part of this specification, illustrate exemplary embodiments of the present disclosure and together with the description, serve to explain the principles of the invention.

FIG. **1** is a diagram illustrating a temperature sensitive item including a temperature sensitive label consistent with embodiments of the present disclosure.

FIGS. **2-5** are diagrams illustrating exemplary temperature sensitive labels which include messages readable by humans or machines consistent with embodiments of the present disclosure.

FIGS. **6-9** are diagrams illustrating exemplary temperature sensitive labels which include messages readable by machines consistent with embodiments of the present disclosure.

FIG. **10** is a diagram illustrating an exemplary toner container including a temperature sensitive label consistent with embodiments of the present disclosure.

FIG. **11** is a diagram illustrating an exemplary system in which an exemplary toner container may be used.

DETAILED DESCRIPTION

Embodiments of the present disclosure are directed to a temperature sensitive label which may be affixed to a temperature sensitive item. The temperature sensitive label conveys when the item has reached a predetermined or "tripping" temperature. The tripping temperature may be a temperature or a predetermined temperature range at which the item may become compromised. To convey this, the label changes properties and functions with a message to convey that the item has been exposed to the tripping temperature. For example, the label may reveal, block, or alter a message that conveys whether the item has been exposed to the tripping temperature. The message may be part of the label or separate from the label.

Reference will now be made in detail to the exemplary embodiments of the present disclosure, an example of which is illustrated in the accompanying drawings. Wherever possible, the same reference numbers will be used throughout the drawings to refer to the same or like parts.

In the following description, reference is made to the accompanying drawings that form a part thereof, and in which is shown by way of illustration specific exemplary embodiments. These embodiments are described in sufficient detail to enable those skilled in the art to practice the invention and it is to be understood that other embodiments may be utilized and that changes may be made without departing from the scope of the invention. The following description is, therefore, merely exemplary

FIG. **1** is a diagram illustrating a temperature sensitive item **100** including a temperature sensitive label **102** consistent with embodiments of the present disclosure. Temperature sensitive label **102** changes in response to item **100** or in response to the environment in which item **100** resides reaching a tripping temperature. The tripping temperature may be a temperature at which item **100** may be become dangerous, damaged, unsafe, useless, and the like. The temperature may be the temperature of item **100**, the temperature of the environment in which item **100** is located, and the like. As such, label **102** may be utilized to determine if item **100** has been subjected to tripping temperatures that may compromise item **100**.

Temperature sensitive item **100** may be any type of item that may be susceptible to varying temperatures. Item **100**

may be food, drugs, beverages, electronic equipment, chemicals, printer ink, printer toner, copier ink, copier toner, replenisher, and the like. For example, item **100** may be food that becomes spoiled or dangerous after being exposed to certain temperatures.

Temperature sensitive label **102** comprises a temperatures sensitive material that changes properties in response to item **100** or the environment in which item **100** resides reaching a tripping temperature. When the temperature sensitive material changes properties, label **102** conveys a message or messages that indicate item **100** may have been exposed to a tripping temperature. Temperature sensitive material may change in any manner suitable for conveying a message or messages that indicate item **100** has been subjected to a tripping temperature. For example, label **102** may change color, change transparency, and the like.

Once label **102** is exposed to the tripping temperature, label **102** may continue to display the message or messages even when no longer exposed to the tripping temperature. Likewise, once label **102** is exposed to the tripping temperature, label **102** may discontinue displaying the message or messages when no longer exposed to the tripping temperature.

The temperature sensitive material may be any type of temperature sensitive material that changes properties in response to a tripping temperature, such as chemical indicators, thermochromatic ink, leucodyes, fusible materials, and the like. For example, temperature sensitive materials may include temperature sensitive chemical indicators orthermochromatic ink used to communicate letters, symbols, words, barcodes, or other indicia. Thermochromic or thermochromatic inks may comprise leucodye and a developer dissolved in a medium. Upon heating, the medium melts and dissolves the dye and developer, resulting in a change in color. Upon cooling, the medium crystallizes and the color reverts back to the original. The thermochromatic inks may be any type of well-known inks such as SunChemical's ThermaSOLV. Additionally, for example, the temperature sensitive materials may include fusible materials. When exposed to tripping temperatures, the fusible material fuses and becomes transparent or opaque.

The temperature at which the material changes properties may be dependant upon the type of material utilized. Temperature sensitive material may changes properties in response to a particular temperature or range of temperatures.

The messages or messages conveyed by label **102** may be any type of indicia to indicate that item **100** has or has not been exposed to the tripping temperature. The message or messages may be detectable by humans, machines, or both. For example, the message may be a text message, such as "Too Hot," or barcode representing the same, which indicates item **100** may have been exposed to a tripping temperature.

Temperature sensitive label **102** may be constructed such that the temperature sensitive material and the message or messages are a part of label **102**. The material and message may be arranged in any configuration to convey the message in response to the tripping temperature. The message may be constructed of the temperature sensitive material or the message be may be covered with the temperature sensitive material. Then, when label **102** is exposed to the tripping temperature, the material changes properties and affects the message. The temperature sensitive material may change properties to reveal, alter, or obscure the message or messages.

For example, label **102** may be constructed of a label material consisting of a support surface, an adhesive layer, and temperature sensitive chemical indicators or thermochromatic ink used to communicate letters, symbols, words, barcodes, or other characters. The label may consist of a colored paper layer applied to a label stock. Adhesive is applied to the label stock. The colored paper layer may be coated with a fusible material. The fusible material may be coated a clear film, such as Mylar or some similar material. Alternatively, the fusible material may be encapsulated by the Mylar. Under normal conditions, the fusible material may be opaque. Upon reaching the tripping temperature, the fusible material fuses and becomes transparent, thus revealing the underlying paper layer. The underlying paper layer may include a contrasting color to the surrounding label stock, thus presenting a clear indication that the label has reached the tripping temperature. The underlying paper layer may also include a message indicating that the label has reached a tripping temperature. Similarly, the fusible material may initially be transparent, and may become opaque after exposure to the tripping temperature.

Temperature sensitive label **102** may also be constructed of the temperature sensitive material and, optionally, a message or messages in order to function with a message that is part of item **100**. As such, label **102** may be affixed to item **100** and may affect the message that is part of item **100**. The material and optional message or messages may be arranged in any configuration to function with the message on item **100**. Label **102** may include a temperature sensitive material and may be positioned to cover a message on item **100**. When label **102** is exposed to the temperature, the material changes properties and affects the message on item **100**. The temperature sensitive material may change to reveal, alter or obscure the message on item **100**.

For example, label **102** may consist of a layer of fusible material. The fusible material may be coated a clear film, such as Mylar or some similar material. Alternatively, the fusible material may be encapsulated by the Mylar. Adhesive may be applied to one side of the layer of fusible material. Label **102** may then be positioned to function with a message that is part of item **100**. In the nominal state the fusible material may be opaque. Upon reaching the tripping temperature, the fusible material fuses and becomes transparent, thus revealing or altering the message that is part of item **100**. Similarly, the fusible material may initially be transparent, and may become opaque after exposure to the tripping temperature.

Temperature sensitive label **102** may be affixed to item **100** at any location to detect changes in temperature to item **100** or to the environment in which item **100** resides. For example, label **102** may be directly affixed to item **100**. Additionally, label **102** may be affixed to packaging covering item **100**.

As mentioned above, the change in temperature sensitive label **102** may be readable either by a machine, human, or both. FIGS. **2-5** are diagrams illustrating examples of temperature sensitive label **102** that may be read by either a machine or human consistent with embodiments of the present disclosure. Labels **102** illustrated in FIGS. **2-5** indicate that item **100** has reached a tripping temperature by either displaying a message or altering a message contained in label **102** or on item **100**. The tripping temperature may be a temperature at which item **100** may become damaged, useless, unsafe, dangerous, or the like.

FIG. **2** is a diagram illustrating an example of label **102** that displays a message in response to being exposed to a tripping temperature. As illustrated in FIG. **2**, label **102** comprises a message covered with an opaque temperature sensitive material that reveals the message when being exposed to the tripping temperature.

The warning message may be a part of label **102**. For example, label **102** may consist of a first layer containing the warning message and a second layer of temperature sensitive material positioned over and covering the first layer. Addi-

tionally, the warning message may be a part of item **100**. For example, the warning message may be printed on item **100** and label **102** may be affixed to cover the warning message. One skilled in the art will realize that label **102** may be constructed of any number of layers necessary to convey the warning message.

The temperature sensitive material may become transparent when a tripping temperature has been reached. Under normal conditions, label **102** would appear blank due to the presence of the untripped temperature sensitive material covering the message. Upon reaching the tripping temperature, the material in the temperature sensitive label becomes transparent, revealing a message **202** beneath.

For example, as illustrated, message **202** may consist of a text message such as "Warning." While FIG. **2** illustrates a text message, one skilled in the art will realize that message **202** may be any type of graphical message, text message, indicia or combination thereof to indicate that temperature sensitive item **100** has been subjected to a temperature, which may compromise item **100**.

Message **202** may be detected and read by a human or a machine. For example, a human may detect and read message **202** by inspecting item **100** to determine if message **202** has become visible. A machine may detect message **202** using a text or graphics detector such as an optical image scanner to determine if message **202** has become visible.

In the exemplary label **102** described in FIG. **2**, the warning message may be covered with an opaque temperature sensitive material. One skilled in the art will realize that the warning message may be constructed of the temperature sensitive material. As such, the warning message may change properties and become visible when exposed to the tripping temperature.

FIG. **3** is a diagram illustrating another example of label **102** that changes messages in response to being exposed to a tripping temperature. As illustrated in FIG. **3**, label **102** comprises a first message that conveys item **100** has not been exposed to the tripping temperature. Label **102** also comprises a second message covered with a temperature sensitive material. The second message is revealed and alters the first message when exposed to the tripping temperature.

For example, label **102** comprises a message **302** positioned on a first layer. Message **302** conveys that item **100** has not been exposed to the tripping temperature, which may compromise item **100**. To indicate exposure to the tripping temperature, another message **304**, which alters message **302**, may be positioned on the first layer. Message **304** may be covered with an opaque temperature sensitive material. The temperature sensitive material may become transparent when the tripping temperature has been reached. One skilled in the art will realize that label **102** may be constructed of any number of layers necessary to convey the message.

Under normal conditions, label **102** would display message **302** that conveys item **100** has not been exposed to the tripping temperature. Upon reaching the tripping temperature, the temperature sensitive material in the label **102** becomes transparent, revealing a message **304** beneath. Message **304** would alter message **302** in order to indicate that item **100** has been exposed to the tripping temperature.

For example, as illustrated, message **302** may consist of a text message, such as "Safe," indicating that item **100** has not been exposed to the tripping temperature. Then, once exposed to the tripping temperature, message **304**, which may consist of a text message "Un," may become visible. The combination of message **302** and message **304** consists of the text message "UnSafe" that indicates item **100** may have been compromised. While FIG. **3** illustrates a text message, one skilled in the art will realize that message **302** and message **304** may be any type of graphical message, text messages, indicia, or combination thereof, to indicate that temperature sensitive item **100** has been subjected to a temperature, which may compromise item **100**.

Message **302** and message **304** may be detected and read by a human or a machine. For example, a human may detect and read message **302** and message **304** by inspecting item **100** to determine if message **304** has become visible. A machine may detect message **302** and message **304** using a text or graphics detector such as an optical image scanner to determine if message **304** has become visible.

In the example of label **102** described above in reference to FIG. **3**, messages **302** and **304** may be contained in label **102**. Additionally, message **302**, message **304**, or both may be part of item **100**. For example, message **302** may be printed or may be preexistent on item **100**. Then, label **102**, which includes message **304** covered with an opaque temperature sensitive material, may be positioned adjacent message **302** in order to alter message **302**. When the tripping temperature is reached, opaque temperature sensitive material may become transparent to reveal message **304** and alter message **302**.

In the exemplary label **102** described in FIG. **3**, the message may be covered with an opaque temperature sensitive material. One skilled in the art will realize that the message may be constructed of the temperature sensitive material. As such, the message may change properties and become visible when exposed to the tripping temperature.

FIG. **4** is a diagram illustrating another example of label **102** in which a message is obscured in response to being exposed to a tripping temperature. As illustrated in FIG. **4**, label **102** comprises a message covered with a transparent temperature sensitive material. The message may convey that item **100** has not been exposed to the tripping temperature. The material obscures the message when exposed to the tripping temperature.

For example, label **102** may comprise a message **402** positioned on a first layer. Message **402** conveys that item **100** has not been exposed to the tripping temperature which may compromise item **100**. To indicate exposure to the tripping temperature, message **402** may be covered with second layer comprising a transparent temperature sensitive material. The transparent temperature sensitive material may become opaque or may darken when the tripping temperature has been reached. One skilled in the art will realize that label **102** may be constructed of any number of layers necessary to convey the message.

Under normal conditions, label **102** would display message **402** that conveys item **100** has not been exposed to the tripping temperature. Upon reaching the tripping temperature, transparent temperature sensitive material becomes opaque or darkens obscuring message **402** and leaving a blank or black message **404**.

For example, as illustrated, message **402** may consist of a text message, such as "Safe," indicating that item **100** has not been exposed to the tripping temperature. Then, once exposed to the tripping temperature, message **402** may be obscured by blank or black message **404**. The absence of message **402**, consisting of the text message "Safe," may indicate that item **100** has been compromised. While FIG. **4** illustrates a text message, one skilled in the art will realize that message **402** may be any type of graphical or text messages, or other indicia to indicate that temperature sensitive item **100** has been subjected to a temperature, which may compromise item **100**.

Message **402** may be detected and read by a human or a machine. For example, a human may detect and read message **402** by inspecting item **100** to determine if message **402** is

visible. A machine may detect message **402** and message **404** using a text or graphics detector such as an optical image scanner to determine if message **402** is visible.

In the example of label **102** described above with reference to FIG. **4**, message **402** may be part of label **102**. Additionally, message **402** may be part of item **100**. For example, message **402** may be printed or may be preexistent on item **100**, Then, label **102**, which comprises a transparent temperature sensitive material, may be positioned over message **402**. When the tripping temperature is reached, transparent temperature sensitive material may become opaque or may darken, thereby obscuring message **402**.

In the exemplary label **102** described in FIG. **41** the message may be covered with a transparent temperature sensitive material. One skilled in the art will realize that the message may be constructed of the temperature sensitive material. As such, the message may change properties and become invisible when exposed to the tripping temperature.

FIG. **5** is a diagram illustrating another example of label **102** in which a message is obscured and a message is displayed in response to being exposed to a tripping temperature. As illustrated in FIG. **5**, label **102** comprises a first message covered with a transparent temperature sensitive material and a second message covered with an opaque temperature sensitive material. The first message may convey that item **100** has not been exposed to the tripping temperature and the second message may convey that item **100** has been exposed to the tripping temperature. The first message may be obscured and the second message may be revealed when exposed to the tripping temperature.

For example, label **102** comprises a message **502** on a first portion **503** of a first layer. Message **502** may convey that item **100** has not been exposed to tripping temperatures, which may compromise item **100**. Message **502** may be covered with a second layer which comprises a transparent temperature sensitive material covering first portion **503**. The transparent temperature sensitive material may become opaque or may darken when a tripping temperature has been reached.

In addition, to indicate exposure to the tripping temperatures, label **102** may also include a warning message **506** on a second portion **504** of the first layer. The second layer covering second portion **504** may comprise an opaque temperature sensitive material. Upon reaching the tripping temperature, the material in the temperature sensitive label becomes transparent, revealing message **506** beneath. One skilled in the art will realize that label **102** may be constructed of any number of layers necessary to convey the message.

Under normal conditions, label **102** would display message **502** that conveys item **100** has not been exposed to tripping temperatures. Upon reaching the tripping temperature, transparent temperature sensitive material, covering first portion **503**, becomes opaque or darkens obscuring message **502** with opaque or black message **508**. At the same time, upon reaching the tripping temperature, temperature sensitive material, covering second portion **504**, becomes transparent, revealing message **506** beneath.

For example, as illustrated, message **502** may consist of a text message, such as "Safe," indicating that item **100** has not been exposed to the tripping temperature. Then, once exposed to the tripping temperature, message **502** may be obscured. At the same time, upon reaching the tripping temperature, temperature sensitive material, covering second portion **504**, becomes transparent, revealing a message **506** that may consist of a text message such as "Warning." While FIG. **5** illustrates a text message, one skilled in the art will realize that message **502** and message **506** may be any type of graphical or text messages to indicate that temperature sensitive item **100** has been subjected to a temperature which may compromise item **100**.

Message **502** and message **506** may be detected and read by a human or a machine. For example, a human may detect and read message **502** and message **506** by inspecting item **100** to determine if message **502** is visible or if message **506** is visible. A machine may detect message **502** and message **506** using a text or graphics detector such as an optical image scanner to determine if message **502** is visible or message **506** is visible.

In the example of label **102** described above with reference to FIG. **5**, message **502** and message **506** may be part of label **102**. Additionally, message **502**, message **506**, or both may be part of item **100**. For example, message **502** may be printed or may be preexistent on item **100**. Then, label **102** may comprise a transparent temperature sensitive material in first portion **503**. Label **102** may also comprise second portion **504**, which includes message **506** covered with an opaque temperature sensitive material. Label **102** may be positioned such that first portion **503** covers message **502**. When the tripping temperature is reached, transparent temperature sensitive material of first portion **503** may become opaque or may darken, thereby obscuring message **502**. At the same time, the opaque temperature sensitive material of second portion **504** may become transparent revealing message **506**.

In the exemplary label **102** described in FIG. **5**, the messages may be covered with a transparent temperature sensitive material or an opaque temperature sensitive material. One skilled in the art will realize that the messages may be constructed of the temperature sensitive material. As such, the messages may change properties and become visible or invisible when exposed to the tripping temperature

As mentioned above, the change in temperature sensitive label **102** may be configured to be read by a machine. FIGS. **6-9** are diagrams illustrating examples of temperature sensitive label **102** that may be read by a machine consistent with embodiments of the present disclosure. Labels **102** illustrated in FIG. **6-9** indicate that item **100** has reached a tripping temperature by either displaying a machine-readable message or altering a machine-readable message contained in label **102**. The tripping temperature may be the temperature at which item **100** may become damaged, useless, unsafe, dangerous, and the like.

FIG. **6** is a diagram illustrating an example of label **102** that displays a machine-readable message in response to being exposed to a tripping temperature. As illustrated in FIG. **6**, label **102** comprises a machine readable message covered with an opaque temperature sensitive material. The machine-readable message is revealed when exposed to the tripping temperature.

The machine-readable message may be a part of label **102**. For example, label **102** may consist of a first layer containing the machine-readable message and a second layer of temperature sensitive material positioned over and covering the first layer. Additionally, the machine-readable message may be a part of item **100**. For example, the machine-readable message may be printed on item **100** and label **102** may be affixed to cover the machine-readable message. One skilled in the art will realize that label **102** may be constructed of any number of layers necessary to convey the machine-readable message.

The temperature sensitive material may become transparent when a tripping temperature has been reached. Under normal conditions, label **102** would appear blank due to the presence of the untripped temperature sensitive material. Upon reaching the trigger temperature, the material in the

temperature label becomes transparent, revealing a machine-readable message **602** beneath.

For example, as illustrated, machine-readable message **602** may consist of a barcode that corresponds to a message such as "tripping temperature reached." While FIG. **6** illustrates a barcode, one skilled in the art will realize that message **602** may be any type of machine-readable message to indicate that temperature sensitive item **100** has been subjected to a temperature which may compromise item **100**, such as glyphs.

Machine-readable message **602** may be detected and read by any type of device capable of reading the machine-readable message. For example, a barcode reader may scan label **102** to determine if machine-readable message **602** has become visible.

In the exemplary label **102** described in FIG. **6**, the machine-readable message may be covered with an opaque temperature sensitive material. One skilled in the art will realize that the machine-readable message may be constructed of the temperature sensitive material. As such, the machine-readable message may change properties and become visible when exposed to the tripping temperature.

FIG. **7** is a diagram illustrating another example of label **102** that changes machine-readable messages in response to being exposed to a tripping temperature. As illustrated in FIG. **7**, label **102** comprises a first machine-readable message that conveys item **100** has not been exposed to the tripping temperature. Label **102** also comprises a second machine-readable message covered with a temperature sensitive material. The second machine-readable message is revealed and alters the first machine-readable message when exposed to the tripping temperature.

For example, label **102** may comprise a machine-readable message **702** positioned on a first layer. Machine-readable message **702** conveys that item **100** has not been exposed to the tripping temperature, which may compromise item **100**. To indicate exposure to the tripping temperature, another machine-readable message **704**, which alters message **702**, may be positioned on the first layer. Machine-readable message **704** may be covered with an opaque temperature sensitive material. The temperature sensitive material may become transparent when the tripping temperature has been reached. One skilled in the art will realize that label **102** may be constructed of any number of layers necessary to convey the machine-readable message.

Under normal conditions, label **102** would display machine-readable message **702** that conveys item **100** has not been exposed to tripping temperatures. Upon reaching the tripping temperature, the material in the temperature label becomes transparent, revealing a machine-readable message **704** beneath. Machine-readable message **704** would alter machine-readable message **702** to create a new machine-readable message **706**. Machine-readable message **706** may indicate that item **100** has been exposed to the tripping temperature.

For example, as illustrated, machine-readable message **702** may consist of a barcode representing a text message such as "Item XYZ." The barcode indicates that item **100** has not been exposed to the tripping temperature. Then, once exposed to the tripping temperature, machine-readable message **704** would change machine-readable message **702** into machine-readable message **706**. Machine-readable message may consist of a new barcode representing a text message such as "Item XYZ unsafe". The combination of machine-readable message **702** and machine-readable message **704** may indicate item **100** being compromised. While FIG. **7** illustrates a barcode, one skilled in the art will realize that machine-readable message **702**, machine-readable message **704**, and machine-readable message **706** may be any type of machine-readable messages to indicate that temperature sensitive item **100** has been subjected to a temperature which may compromise item **100**, such as glyphs.

Machine-readable message **702**, machine-readable message **704**, and machine-readable message **706** may be detected and read by any type of device capable of reading the machine-readable messages. For example, a barcode reader may scan label **102** to determine if machine-readable message **702** has been changed to machine-readable message **706**.

In the example of label **102** described above in reference to FIG. **7**, machine-readable messages **702** and **704** may be contained in label **102**. Additionally, message **702**, message **704**, or both may be part of item **100**. For example, machine-readable message **702** may be printed or may be preexistent on item **100**. Then, label **102**, which includes machine-readable message **704** covered with an opaque temperature sensitive material, may be positioned adjacent machine-readable message **702** in order to change machine-readable message **702** into machine-readable message **706**. When the tripping temperature is reached, opaque temperature sensitive material may become transparent to reveal machine-readable message **704** and alter machine-readable message **702**.

in the exemplary label **102** described in FIG. **7**, the machine-readable message may be covered with an opaque temperature sensitive material. One skilled in the art will realize that the machine-readable message may be constructed of the temperature sensitive material. As such, the machine-readable message may change properties and become visible when exposed to the tripping temperature.

FIG. **8** is a diagram illustrating another example of label **102** in which a machine-readable message is obscured in response to being exposed to a tripping temperature. As illustrated in FIG. **8**, label **102** comprises a machine-readable message covered with a transparent temperature sensitive material. The machine-readable message conveys that item **100** has not been exposed to the tripping temperature. The material obscures the message when exposed to the tripping temperature.

For example, label **102** comprises a machine-readable message **802** positioned on a first layer. Machine-readable message **802** conveys that item **100** has not been exposed to the tripping temperature, which may compromise item **100**. To indicate exposure to the tripping temperature, machine-readable message **802** may be covered with second layer comprising a transparent temperature sensitive material. The transparent temperature sensitive material may become opaque or may darken when the tripping temperature has been reached. One skilled in the art will realize that label **102** may be constructed of any number of layers necessary to convey the machine-readable message.

Under normal conditions, label **102** would display machine-readable message **802** that conveys item **100** has not been exposed to tripping temperatures. Upon reaching the tripping temperature, transparent temperature sensitive material becomes opaque or darkens obscuring machine-readable message **802**, leaving a blank or black message **804**.

For example, as illustrated, machine-readable message **802** may consist of a barcode representing a text message, such as "Item XYZ." The barcode indicates that item **100** has not been exposed to the tripping temperature. Then, once exposed to the tripping temperature, machine-readable message **802** may be obscured by the blank or black message **804**. The absence of machine-readable message **802** may indicate damage or problems with item **100**. While FIG. **8** illustrates a barcode, one skilled in the art will realize that machine-

readable message **802** may be any type of machine-readable messages to indicate that temperature sensitive item **100** has been subjected to a temperature which may compromise item **100**, such as glyphs.

Machine-readable message **802** may be detected and read by any type of device capable of reading the machine-readable message. For example, a barcode reader may scan label **102** to determine if machine-readable message **802** is visible.

In the example of label **102** described above with reference to FIG. **8**, message **802** may be part of label **102**. Additionally, message **802** may be part of item **100**. For example, message **802** may be printed or may be preexistent on item **100**. Then, label **102**, which comprises a transparent temperature sensitive material, may be positioned over message **802**. When the tripping temperature is reached, transparent temperature sensitive material may become opaque or may darken, thereby obscuring message **802**.

In the exemplary label **102** described in FIG. **8**, the machine-readable message may be covered with a transparent temperature sensitive material. One skilled in the art will realize that the machine-readable message may be constructed of the temperature sensitive material. As such, the machine-readable message may change properties and become invisible when exposed to the tripping temperature.

FIG. **9** is a diagram illustrating another example of label **102** in which a machine-readable message is obscured and a machine-readable message is displayed in response to being exposed to a tripping temperature. As illustrated in FIG. **9**, label **102** comprises a first machine-readable message covered with a transparent temperature sensitive material and a second machine-readable message covered with an opaque temperature sensitive material. The first machine-readable message may convey that item **100** has not been exposed to the tripping temperature and the second machine-readable message may convey that item **100** has been exposed to the tripping temperature. The first machine-readable message may be obscured and the second machine-readable message may be revealed when exposed to the tripping temperature.

For example, label **102** comprises a machine-readable message **902** on a first portion **903** of a first layer. Machine-readable message **902** may convey that item **100** has not been exposed to tripping temperatures, which may compromise item **100**. Machine-readable message **902** may be covered with a second layer, which comprises a transparent temperature sensitive material covering first portion **903**. The transparent temperature sensitive material may become opaque or may darken when a tripping temperature has been reached.

In addition, to indicate exposure to the tripping temperatures, label **102** may also include a machine-readable message **906** on a second portion **904** of the first layer. The second layer covering second portion **904** may comprise an opaque temperature sensitive material. Upon reaching the tripping temperature, the material in the temperature sensitive label becomes transparent, revealing machine-readable message **906** beneath. One skilled in the art will realize that label **102** may be constructed of any number of layers necessary to convey the machine-readable message.

Under normal conditions, label **102** would display machine-readable message **902** that conveys item **100** has not been exposed to tripping temperatures. Upon reaching the tripping temperature, transparent temperature sensitive material becomes opaque or darkens obscuring machine-readable message **902** with opaque or black message **906**. At the same time, upon reaching the tripping temperature, temperature sensitive material of second portion **904** becomes transparent, revealing a machine-readable message **902** beneath.

For example, as illustrated, machine-readable message **902** may consist of a barcode representing a text message such as "Item XYZ." The barcode indicates that item **100** has not been exposed to the tripping temperature. Then, once exposed to the tripping temperature, machine-readable message **902** may be obscured. At the same time, upon reaching the tripping temperature, temperature sensitive material of portion **904** becomes transparent, revealing a machine-readable message **906**. Machine-readable message **906** may consist of a barcode representing a text message such as "Item XYZ Unsafe." While FIG. **9** illustrates a barcode, one skilled in the art will realize that machine-readable message **902** and machine-readable message **906** may be any type of machine-readable messages to indicate that temperature sensitive item **100** has been subjected to a temperature which may compromise item **100**, such as glyphs.

Machine-readable message **902** and machine-readable message **906** may be detected and read by any type of device capable of reading the machine-readable message. For example, a barcode reader may scan label **102** to determine if machine-readable message **902** or machine-readable message **906** is visible.

In the example of label **102** described above with reference to FIG. **9**, machine-readable message **902** and machine-readable message **906** may be part of label **102**. Additionally, machine-readable message **902**, machine-readable message **906**, or both may be part of item **100**. For example, machine-readable message **902** may be printed or may be preexistent on item **100**. Then, label **102** may comprise a transparent temperature sensitive material in first portion **903**. Label **102** may also comprise second portion **904**, which includes machine-readable message **906** covered with an opaque temperature sensitive material. Label **102** may be positioned such that first portion **903** covers message **902**. When the tripping temperature is reached, transparent temperature sensitive material of first portion **903** may become opaque or may darken, thereby obscuring machine-readable message **902**. At the same time, the opaque temperature sensitive material of second portion **904** may become transparent revealing machine-readable message **906**.

In the exemplary label **102** described in FIG. **9**, the machine-readable messages may be covered with a transparent temperature sensitive material or an opaque temperature sensitive material. One skilled in the art will realize that the machine-readable messages may be constructed of the temperature sensitive material. As such, the machine-readable messages may change properties and become visible or invisible when exposed to the tripping temperature.

As mentioned above, label **102** may be positioned on any type of item which may be susceptible to temperature changes. FIG. **10** is a diagram illustrating an exemplary label positioned on an exemplary item. As illustrated, label **102** may be positioned on a toner container **1002**. Toner container **1002** may house toner for use in a printer or copier. Label **102** may be any of the exemplary labels **102** described above. Label **102** change properties at a tripping temperature that may fuse or block the toner.

For example, label **102** may include a barcode as illustrated in FIG. **6-9**. As such, label **102** may be readable by a system including a barcode reader. FIG. **11** illustrates an exemplary system **1100** in which toner container **1002** may be utilized. System **1100** may be part of a copier or printer designed to utilize toner container **1002**. System **1100** may prevent toner container **1002** from being utilized if toner container **1002** has been exposed to a tripping temperature. The tripping temperature may be the temperature at which the toner may fuse or block.

As illustrated, system **100** includes a barcode reader **1102**, a movable barrier **1104**, and a barrier control element **1106**. During the operation of system **1100**, toner container **1002** moves along an insertion path in an insertion direction **1108**. Moveable barrier **1104** blocks further movement at an insertion checkpoint.

At the insertion checkpoint, barcode reader **1102** may scan label **102** to determine if toner container **1002** has been exposed to the tripping temperature. After scanning label **102**, barcode reader **1102** may send a signal to barrier control element **1106**. The signal may indicate the results of scanning label **102**.

If label **102** conveys that toner container **1002** has been exposed to the tripping temperature, barrier control element **1106** may leave barrier **1104** blocking toner container **1002** path. As such, system **1100** may prevent damage to the printer or copier in which system **1100** resides. If label **102** conveys that toner container **1002** has not been exposed to the tripping temperature, barrier control element **1106** may move barrier **1104** from toner container **1002** path and allow toner container **1002** to proceed.

FIG. **11** illustrates a system **1100** in which toner container **1002** may be blocked from insertion to a printer or copier. One skilled in the art will realize that other methods may be utilized to prevent damage to the printer or copier. For example, system **1100** may disable the printer or copier if toner container **1002** has been exposed to the tripping temperature. Further, system **1100** may notify a user if toner container **1002** has been exposed to the tripping temperature.

Other embodiments of the present disclosure will be apparent to those skilled in the art from consideration of the specification and practice of the embodiments disclosed herein. It is intended that the specification and examples be considered as exemplary only, with a true scope and spirit of the invention being indicated by the following claims.

What is claimed is:

1. A label for identifying temperature change of an item, comprising:

a message identifying whether the item has been exposed to a temperature that may affect the item, wherein the message comprises a first portion that conveys the item has not been exposed to the temperature, and a second portion that alters the first portion to convey that the item has been exposed to the temperature; and

a material capable of changing properties when exposed to the temperature,

wherein the material is opaque and becomes transparent when exposed to the temperature, and

wherein the material is positioned to cover the second portion and reveal the second portion when exposed to the temperature.

2. The label of claim **1**, wherein the message is at least one of human-readable and machine-readable.

3. The label of claim **1**,

wherein the material comprises a section that is transparent and becomes opaque when exposed to the temperature,

wherein the section of the material is positioned to cover the first portion of the message and block the first portion when exposed to the temperature.

4. A label for identifying temperature change of an item, comprising:

a material capable of changing properties when exposed to a temperature,

wherein the material is positioned to function with a message comprising a first portion that conveys the item has not been exposed to the temperature, and a second portion that conveys the item has been exposed to the temperature,

wherein the material comprises a first section that is transparent and becomes opaque when exposed to the temperature, and a second section that is opaque and becomes transparent when exposed to the temperature,

wherein the first section of the material is positioned to cover the first portion of the message and block the first portion when exposed to the temperature, and

wherein the second section of the material is positioned to cover the second portion of the message and reveal the second portion when exposed to the temperature.

5. The label of claim **4**, wherein the message is at least one of human-readable and machine-readable.

6. The label of claim **4**, wherein the second portion of the message alters the first portion of the message to convey that the item has been exposed to the temperature.

7. A label for identifying temperature change of an item, comprising:

a message identifying whether the item has been exposed to a temperature that may affect the item; and

a material positioned to function with the message to identify when the item has been exposed to the temperature, wherein the material is transparent and becomes opaque when exposed to the temperature.

* * * * *