US009470715B2

(12) **United States Patent**
Fan et al.

(10) **Patent No.: US 9,470,715 B2**
(45) **Date of Patent: Oct. 18, 2016**

(54) **PROBE HEAD**

(71) Applicant: **MPI Corporation**, Hsinchu County (TW)

(72) Inventors: **Horng-Kuang Fan**, Hsinchu County (TW); **Hsien-Ta Hsu**, Hsinchu County (TW)

(73) Assignee: **MPI Corporation**, Hsinchu County (TW)

(*) Notice: Subject to any disclaimer, the term of this patent is extended or adjusted under 35 U.S.C. 154(b) by 436 days.

(21) Appl. No.: **14/150,745**

(22) Filed: **Jan. 8, 2014**

(65) **Prior Publication Data**

US 2014/0197859 A1 Jul. 17, 2014

(30) **Foreign Application Priority Data**

Jan. 11, 2013 (TW) ..... 102101176 A
Dec. 20, 2013 (TW) ..... 102224151 U

(51) **Int. Cl.**
G01R 1/067 (2006.01)
G01R 31/00 (2006.01)
G01R 1/073 (2006.01)

(52) **U.S. Cl.**
CPC ***G01R 1/06761*** (2013.01); ***G01R 1/07314*** (2013.01); ***G01R 1/07357*** (2013.01); *G01R 1/06722* (2013.01)

(58) **Field of Classification Search**
CPC .. G01R 1/067; G01R 31/00; G01R 1/06761; G01R 1/07314; G01R 1/07357; G01R 1/06722; H01R 11/08; H01R 13/00; H01R 13/24
USPC 324/755.11, 756.04, 756.03, 756.01, 324/755.01, 755.05, 755.09; 439/482, 824
See application file for complete search history.

(56) **References Cited**

U.S. PATENT DOCUMENTS

4,548,451 A * 10/1985 Benarr H05K 3/326 29/848
4,774,462 A * 9/1988 Black G01R 1/04 324/754.03
5,175,493 A * 12/1992 Langgard G01R 1/067 324/72.5
5,200,695 A * 4/1993 Kazama G01R 1/067 324/72.5

(Continued)

FOREIGN PATENT DOCUMENTS

CN 101361184 B 4/2011
CN 102378478 A 3/2012

(Continued)

Primary Examiner — Jermele M Hollington
Assistant Examiner — Sean Curtis
(74) *Attorney, Agent, or Firm* — CKC & Partners Co., Ltd.

(57) **ABSTRACT**

A probe head includes a plate, a probe, and at least one composite coating layer. The plate has at least one through hole therein. The probe is at least partially disposed in the through hole of the plate. The composite coating layer includes a metal layer and a plurality of lubricating particles. The metal layer is disposed in the through hole of the plate and between the plate and the probe. The lubricating particles are dispersed in the metal layer.

20 Claims, 7 Drawing Sheets

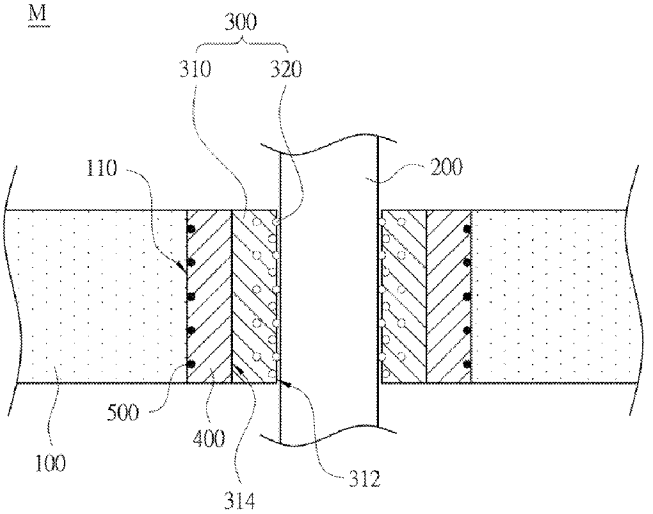

(56) **References Cited**

U.S. PATENT DOCUMENTS

5,235,740 A * 8/1993 Kroeker H05K 13/0482 29/741
5,575,076 A * 11/1996 Creeden G01R 1/07328 324/750.19
5,744,379 A * 4/1998 Mandai H01L 23/5381 257/E21.705
6,066,957 A * 5/2000 Van Loan G01R 1/07328 324/750.19
6,208,158 B1 * 3/2001 Schein G01R 1/07328 324/755.05
6,245,722 B1 * 6/2001 Maples C10M 107/50 508/208
6,251,707 B1 6/2001 Bernier et al.
6,515,496 B2 * 2/2003 Felici G01R 1/07357 324/750.25
6,861,855 B2 * 3/2005 Jurine G01R 1/0675 324/72.5
6,917,525 B2 * 7/2005 Mok G01R 1/06716 361/767
6,977,515 B2 * 12/2005 McQuade G01R 1/06744 29/846
7,173,439 B1 * 2/2007 Campbell G01R 1/06705 324/750.25
7,349,223 B2 * 3/2008 Haemer G01R 1/07314 29/593
7,368,927 B2 * 5/2008 Smith G01R 1/07371 324/754.07
7,417,447 B2 * 8/2008 Kister G01R 1/07371 324/750.16
7,951,756 B2 * 5/2011 Konishi C10M 169/04 428/408
8,039,096 B2 * 10/2011 Zhu C23C 14/0605 204/192.11
8,847,618 B1 * 9/2014 Michalko G01R 31/2808 324/750.19
2001/0044225 A1 * 11/2001 Eldridge G01R 1/06716 439/66
2002/0053734 A1 * 5/2002 Eldridge B23K 20/004 257/724
2003/0099097 A1 * 5/2003 Mok G01R 1/06716 361/767
2004/0101666 A1 * 5/2004 Tsubosaki B32B 15/08 428/209
2004/0223309 A1 * 11/2004 Haemer G01R 1/07314 361/767
2008/0090096 A1 * 4/2008 Suzuki C23C 2/28 428/674
2008/0143379 A1 * 6/2008 Norman H01L 23/50 326/39
2008/0308307 A1 * 12/2008 Chang H05K 3/108 174/257
2010/0102841 A1 * 4/2010 Kawada G01R 1/06733 324/754.01
2010/0120301 A1 * 5/2010 Sanders G01R 1/06722 439/824
2010/0244867 A1 * 9/2010 Chong G01R 3/00 324/755.05
2011/0148448 A1 * 6/2011 St. Onge G01R 1/07328 324/755.01
2011/0204911 A1 * 8/2011 Kimoto G01R 1/06727 324/754.03
2012/0013360 A1 * 1/2012 Oh G01R 3/00 324/763.01
2012/0098562 A1 * 4/2012 Tan G01R 1/06788 324/755.01
2012/0142210 A1 * 6/2012 Di Stefano H01R 13/24 439/374
2014/0197859 A1 * 7/2014 Fan G01R 1/07357 324/755.01
2014/0197860 A1 * 7/2014 Hsu G01R 1/07357 324/756.07

FOREIGN PATENT DOCUMENTS

CN 203732577 U * 7/2014
GB 2056187 A * 3/1981 ..... G01R 1/067
JP 54137056 A * 10/1979
TW 407453 B 10/2000
TW 201017855 A 5/2010
TW 201036213 A 10/2010

* cited by examiner

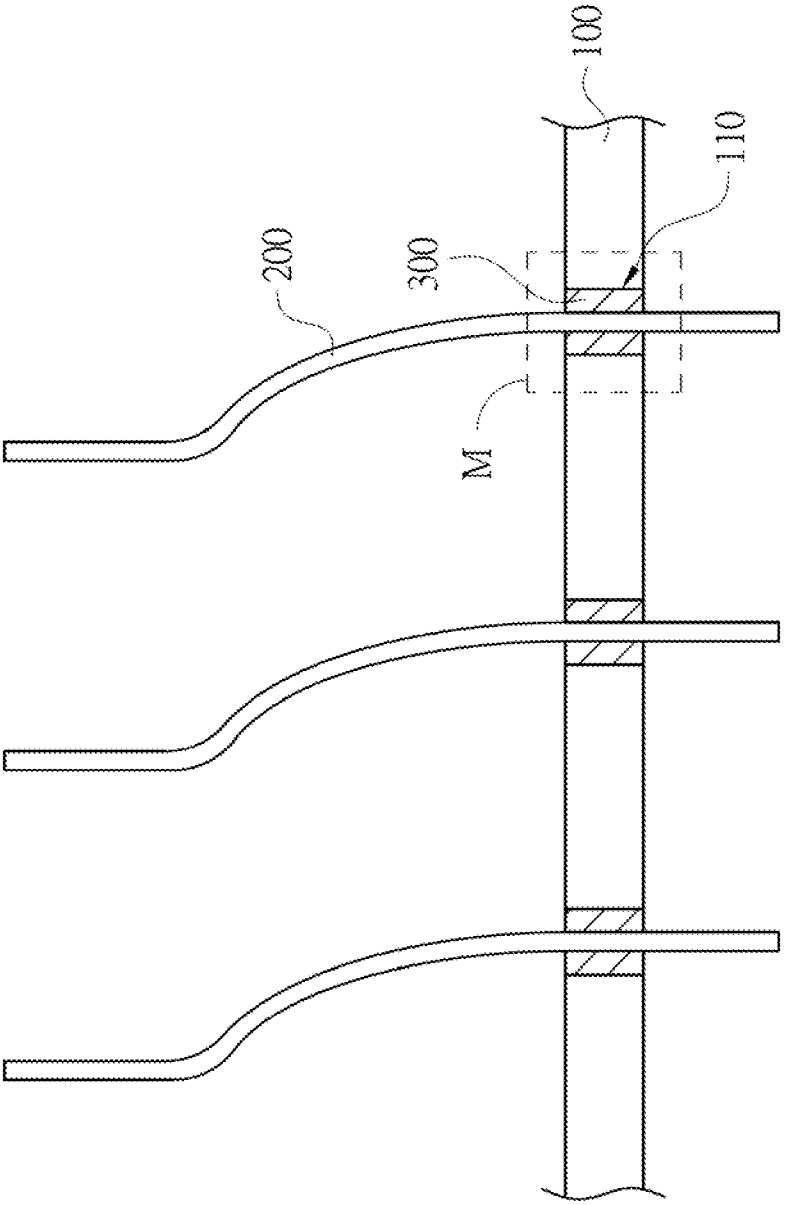

FIG. 1A

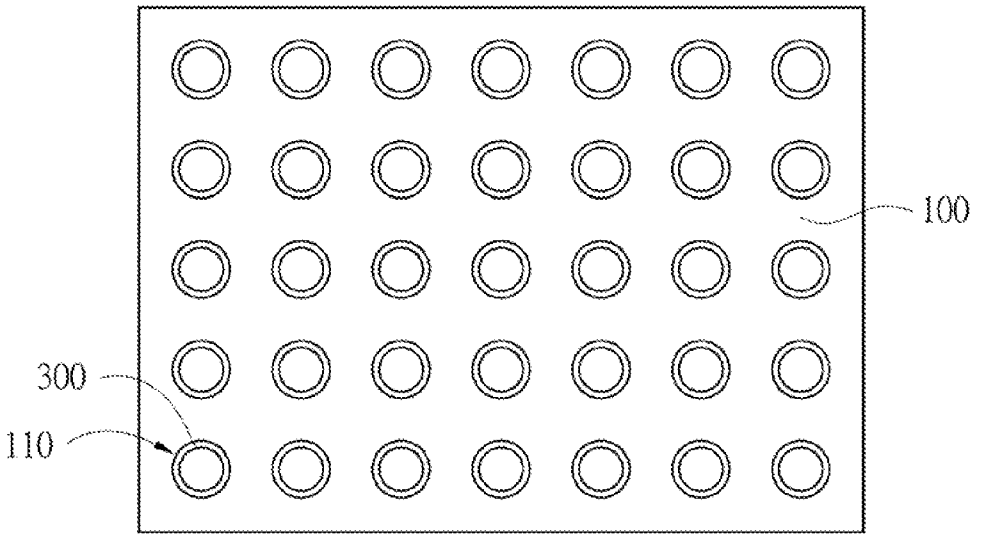

FIG. 1B

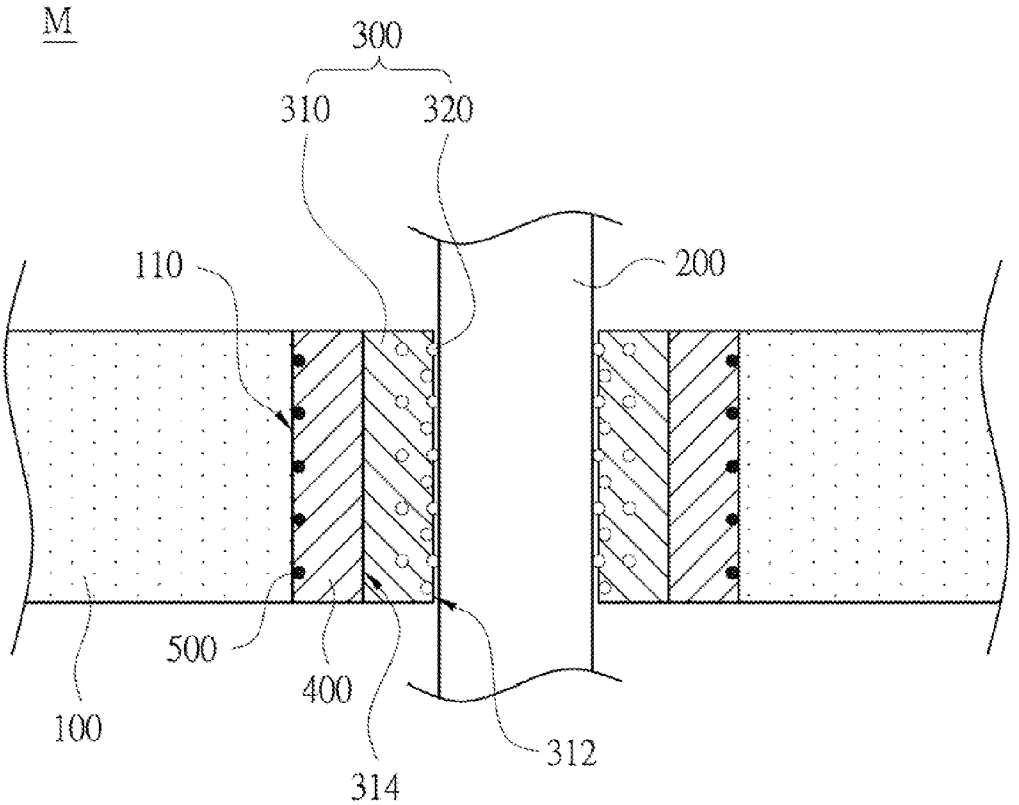

FIG. 2

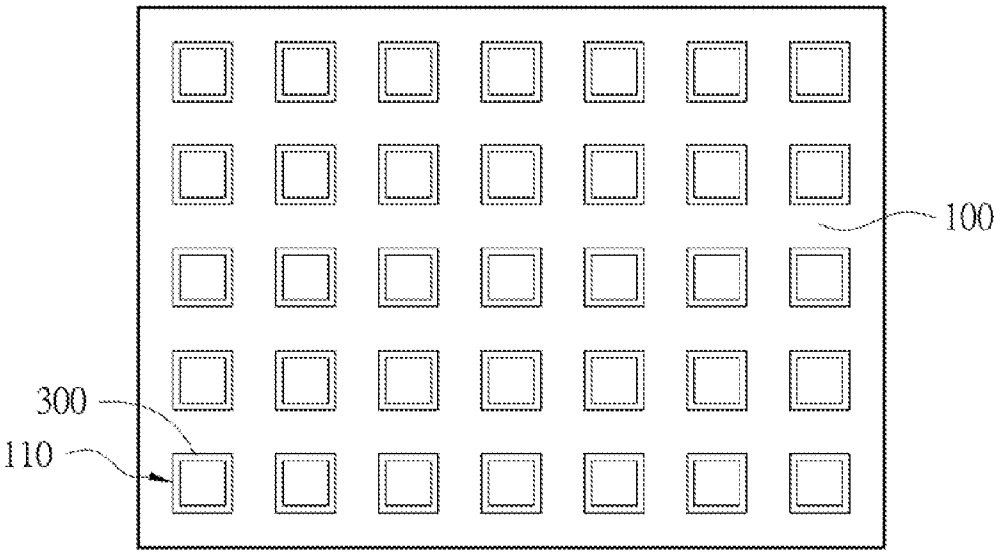

FIG. 3

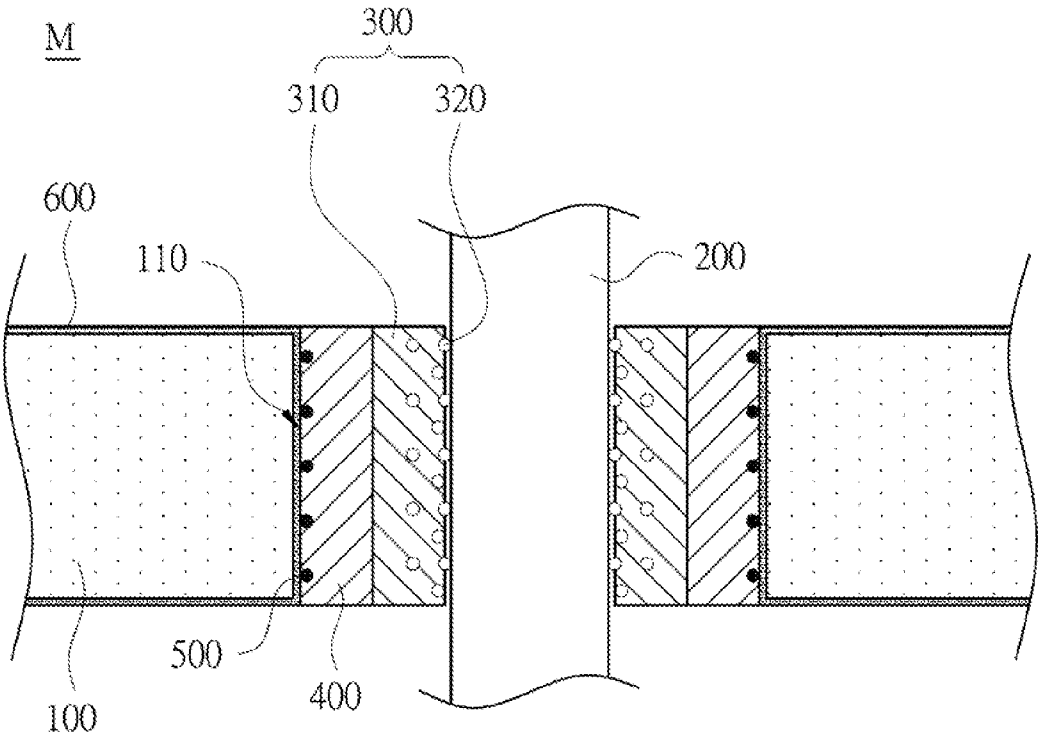

FIG. 4

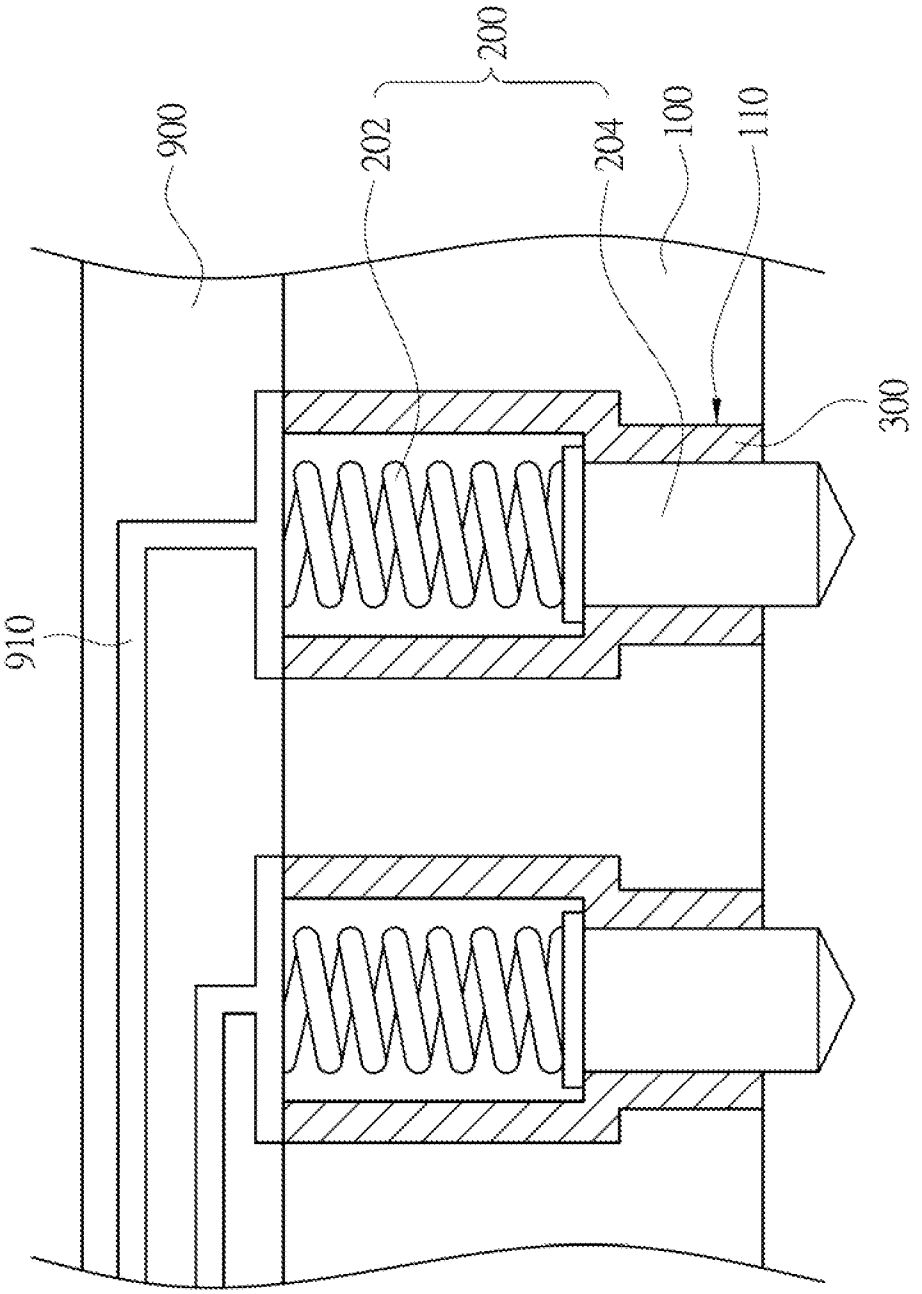

FIG. 5

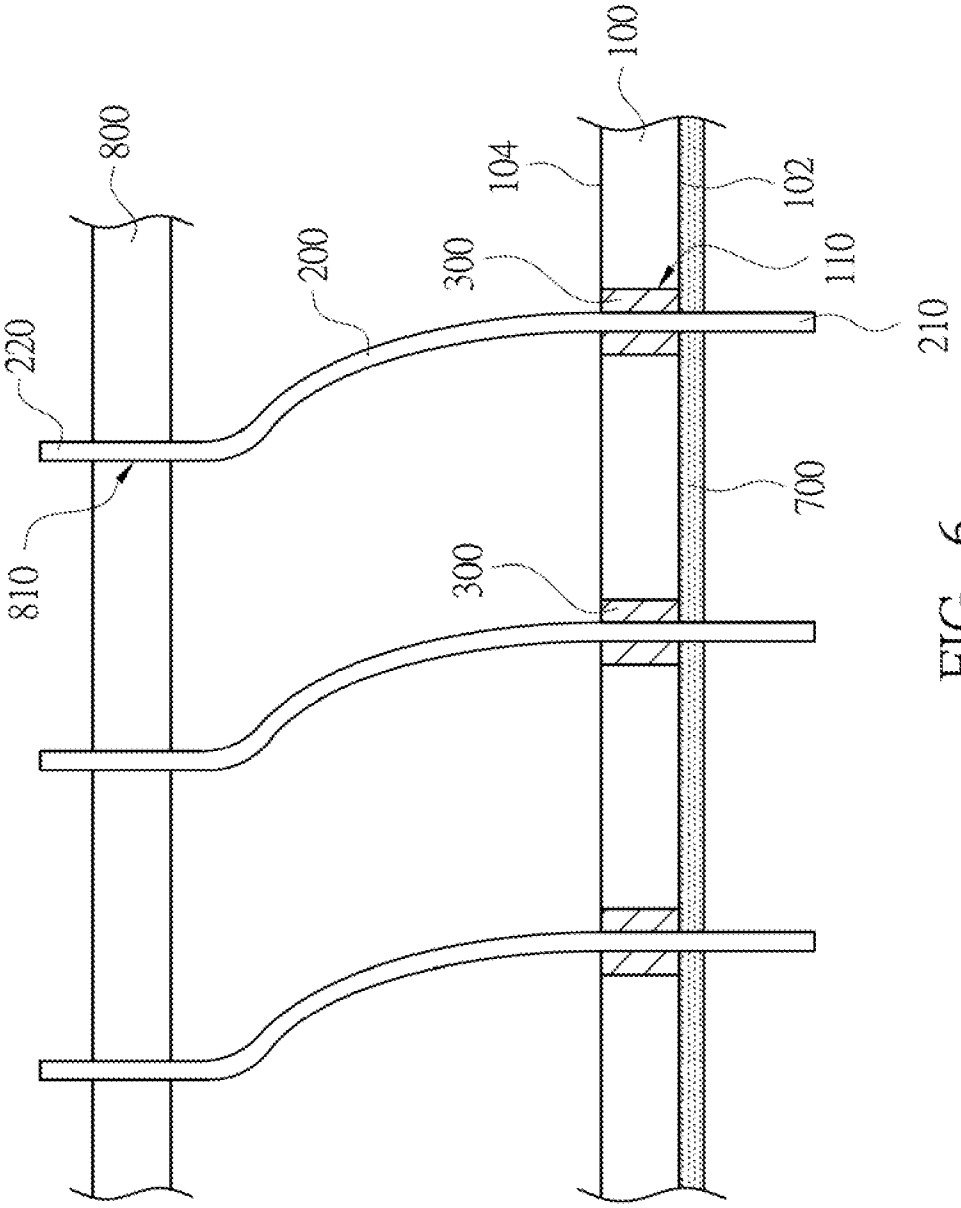

FIG. 6

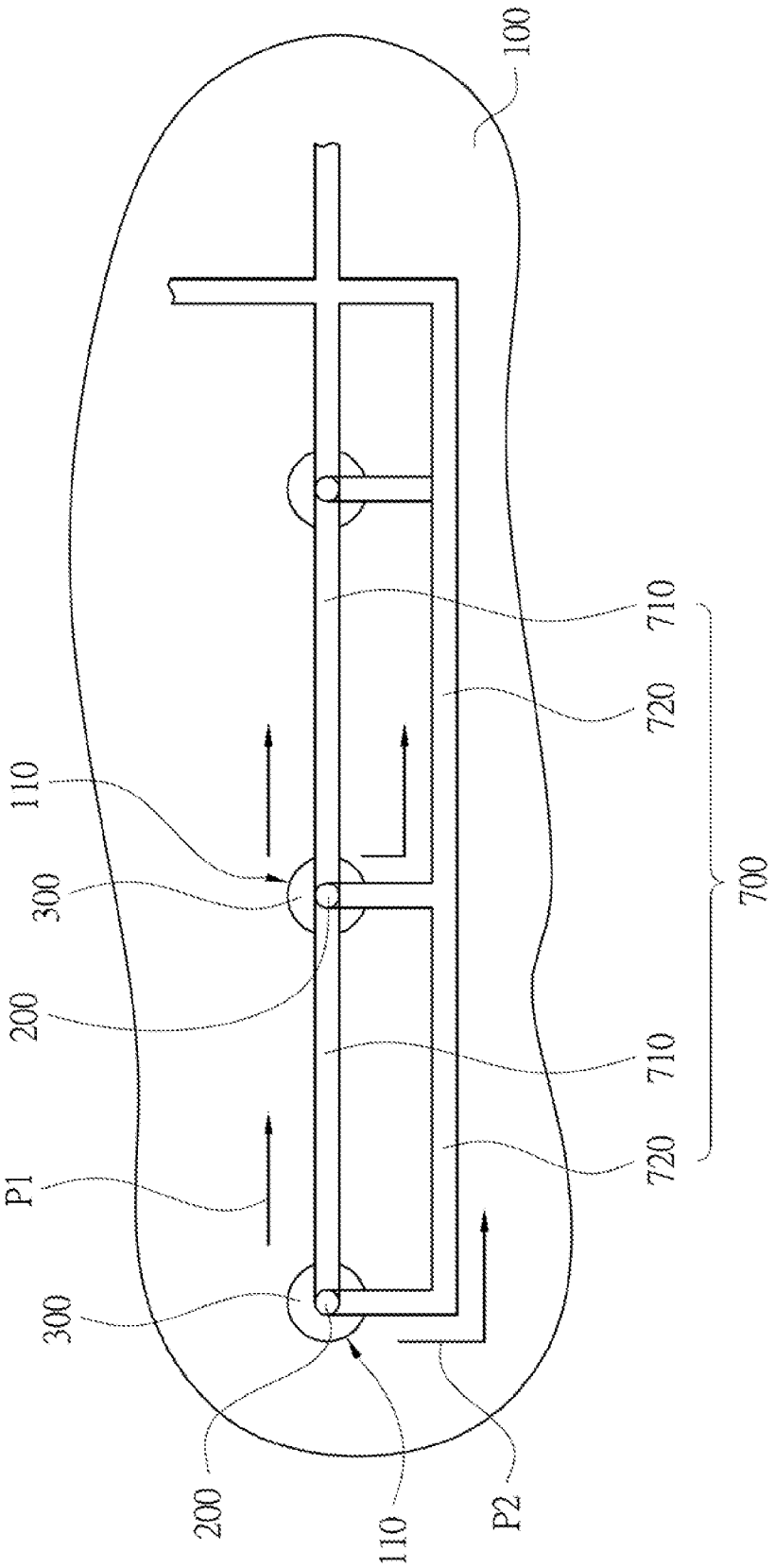

FIG. 7

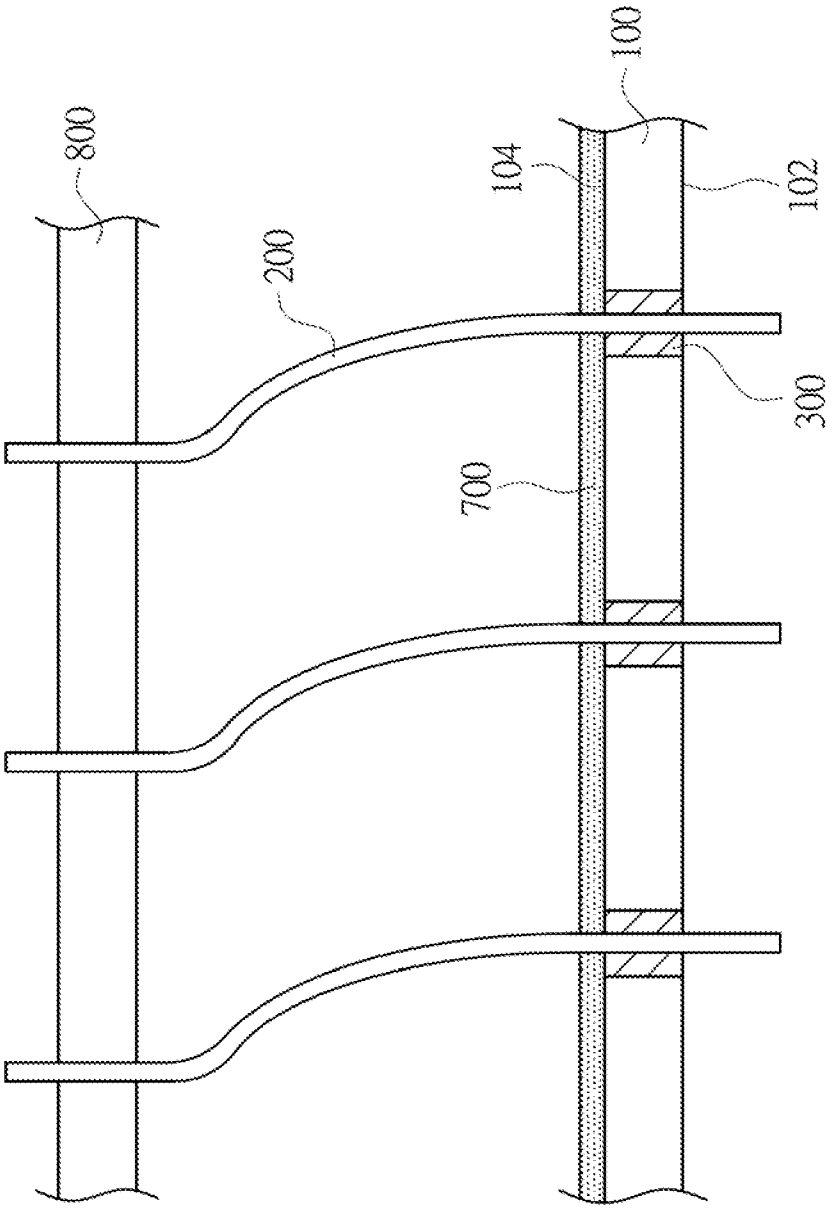

FIG. 8

PROBE HEAD

RELATED APPLICATIONS

This application claims priority to Taiwan Application Serial Number 102101176, filed Jan. 11, 2013, and Taiwan Application Serial Number 102224151, filed Dec. 20, 2013, which are herein incorporated by reference.

BACKGROUND

1. Field of Invention

The present invention relates to a probe head. More particularly, the present invention relates to a probe head applied to a probe card.

2. Description of Related Art

A probe head for testing electronic devices generally includes a plurality of plates, each of which has a plurality of through holes. Each of the through holes is configured for accommodating a probe to confine lateral movement of the probe during the testing process of the electronic devices.

However, since the material of the plate is usually different from that of the probe, the hardness difference therebetween may cause problems in use of the probe head. In particular, since the probe may slide along the through hole, both of the probe and the plate rub against each other and worn from the hardness difference therebetween after a long-term use. Moreover, the probe may be stuck in the through hole due to the high coefficient of friction of the wall of the through hole. These are urgent problems to be solved.

SUMMARY

An aspect of the present invention provides a probe head including a plate, a probe, and at least one composite coating layer. The plate has at least one through hole therein. The probe is at least partially disposed in the through hole of the plate. The composite coating layer includes a metal layer and a plurality of lubricating particles. The metal layer is disposed in the through hole of the plate and between the plate and the probe. The lubricating particles are dispersed in the metal layer.

In one or more embodiments, the lubricating particles are made of Polytetrafluoroethene (PTFE).

In one or more embodiments, the metal layer has an outer surface facing the probe and an inner surface opposite the outer surface, and the lubricating particles at the outer surface of the metal layer are denser than the lubricating particles at the inner surface of the metal layer.

In one or more embodiments, the probe head further includes at least one base layer disposed between the metal layer and the plate.

In one or more embodiments, the base layer and the metal layer are made of the same material.

In one or more embodiments, an interface is formed between the base layer and the metal layer.

In one or more embodiments, the probe head further includes a plurality of seeds disposed between the base layer and the plate.

In one or more embodiments, the through hole is circle-shaped or square-shaped.

In one or more embodiments, the plate is made of ceramic.

In one or more embodiments, the plate is made of silicon.

In one or more embodiments, the probe head further includes an insulating layer disposed between the metal layer and the plate.

In one or more embodiments, the probe head further includes an insulating layer covering the entire surface of the plate.

In one or more embodiments, the plate has opposite major surfaces, and the through hole is through the major surfaces. The probe head further includes at least one bypass wire disposed on at least one of the major surfaces of the plate and electrically connected to the composite coating layer.

In one or more embodiments, the bypass wire is electrically connected to at least two of the composite coating layers.

In one or more embodiments, the bypass wire includes at least one major portion electrically connected to at least two of the composite coating layers in series.

In one or more embodiments, the bypass wire further includes at least one minor portion electrically connected to the major portion in parallel.

In one or more embodiments, the minor portion is longer than the major portion.

In one or more embodiments, the probe head further includes a supporting board disposed opposite the plate. The supporting board has at least one via hole therein. At least another portion of the probe is disposed in the via hole of the supporting board. The probe has a contact end for being in electrical contact with a device to be tested, and the contact end is closer to the plate than to the supporting board.

In one or more embodiments, the bypass wire is disposed at least on the major surface of the plate distal to the supporting board.

In one or more embodiments, the bypass wire is disposed at least on the major surface of the plate proximal to the supporting board.

In one or more embodiments, the probe is a vertical buckling probe or a pogo pin.

Therefore, the embodiments of the present invention provide the probe head whose plate includes the composite coating layer. The probe can smoothly slide in the through hole, and the wearing between the probe and the plate can be improved when the probe touches the plate.

BRIEF DESCRIPTION OF THE DRAWINGS

FIG. **1**A is a cross-sectional view of a probe head according to one embodiment of the present invention;

FIG. **1**B is a top view of a plate and a composite coating layer of FIG. **1**;

FIG. **2** is an enlarged diagram of area M of FIG. **1**A;

FIG. **3** is a top view of the plate and the composite coating layer according to another embodiment of the present invention;

FIG. **4** is an enlarged diagram of area M of FIG. **1**A according to another embodiment of the present invention;

FIG. **5** is a cross-sectional view of the probe head according to yet another embodiment of the present invention;

FIG. **6** is a cross-sectional view of the probe head according to yet another embodiment of the present invention;

FIG. **7** is a bottom view of the probe head of FIG. **6**; and

FIG. **8** is a cross-sectional view of the probe head according to yet another embodiment of the present invention.

DETAILED DESCRIPTION

Reference will now be made in detail to the present embodiments of the invention, examples of which are illustrated in the accompanying drawings. Wherever possible, the same reference numbers are used in the drawings and the description to refer to the same or like parts.

FIG. **1**A is a cross-sectional view of a probe head according to one embodiment of the present invention, and FIG. **1**B is a top view of a plate **100** and a composite coating layer **300** of FIG. **1**. Reference is made to FIGS. **1**A and **1**B. As shown in FIGS. **1**A and **1**B, the probe head includes the plate **100**, a probe **200**, and at least one composite coating layer **300**. The plate **100** has at least one through hole **110** therein. The probe **200** is at least partially disposed in the through hole **110** of the plate **100**. In this embodiment, the probe **200** can be a vertical buckling probe. However, the claimed scope of the present invention is not limited in this respect.

Reference is made to FIG. **2** which is an enlarged diagram of area M of FIG. **1**A. The composite coating layer **300** includes a metal layer **310** and a plurality of lubricating particles **320**, which may be made of metal-polymer. However, the claimed scope of the present invention is not limited in this respect. The metal layer **310** is disposed in the through hole **110** of the plate **100** and between the plate **100** and the probe **200**. The lubricating particles **320** are distributed in the metal layer **310**.

As such, the probe **200** can insert to the plate **100** from the through hole **110**. A portion of the lubricating particles **320** of the composite coating layer **300** may project from the metal layer **310** and touch the probe **200**. The probe **200** can slide smoothly in the through hole **110** since the lubricating particles **320** has small coefficient of friction, such that the lubricating particles **320** can prevent the probe **200** from being stuck in the through hole **110**. Moreover, the bumped lubricating particles **320** can reduce the contact area between the probe **200** and the plate **100**, such that the frictions between the probe **200** and the plate **100** can be educed. Even thought the probe **200** touches the metal layer **310** of the composite coating layer **300**, the wearing between the probe **200** and the plate **100** can be improved since the rigidity of the metal **310** is similar to that of the probe **200**. Hence, the damages of both of the plate **100** and the probe **200** can be avoided due to the composite coating layer **300**. In addition, the composite coating layer **300** can protect the through hole **110** so as to reduce the probability of edge chipping of the through hole **110**.

The plate **100** can be made of non-conductive materials, semiconductor materials, or conductive materials with high strength and easy to fabricate. However, the claimed scope of the present invention is not limited in this respect. In this embodiment, the plate **100** may be made of ceramics. Moreover, the lubricating particles **320** of the composite coating layer **300** may be made of polymer particles such as polytetrafluoroethylene (PTFE) for lubricating. The metal layer **310** of the composite coating layer **300** may be made of Au, Co, Ni, Ni alloy, or any combination thereof. The physical properties of the metal layer **310** may be adjusted according to the rigidity of the probe **200**. It should be noted that the materials of the lubricating particles **320** and the metal layer **310** are illustrative only and should not limit the claimed scope of the present invention. A person having ordinary skill in the art may select proper materials for the lubricating particles **320** and the metal layer **310** according to actual requirements.

Reference is made to FIG. **2**. In one or more embodiments, the metal layer **310** of the composite coating layer **300** and the plate **100** may lack of adhesion if high physical property difference exists between the metal layer **310** and the plate **100**, such that the composite coating layer **300** may peel from the through hole **110** easily. Hence, the probe head may further include at least one base layer **400** disposed between the metal layer **310** and the plate **100**. Both of the adhesion between the base layer **400** and the plate **100**, and the adhesion between the base layer **400** and the metal layer **310** of the composite coating layer **300** are higher than the adhesion between the plate **100** and the metal layer **310**, such that the base layer **400** can be a buffer between the plate **100** and the composite coating layer **300** for adhering the composite coating layer **300** on the plate **100**.

In this embodiment, the materials of the base layer **400** and the metal layer **310** may be the same. However, an interface, e.g., an inner surface **314** in this embodiment, is between the base layer **400** and the metal layer **310**. The interface is formed due to the sequential formations of the base layer **400** and the metal layer **310**. However, in other embodiments, the material of the base layer **400** may be different from the material of the metal layer **310**. The base layer **400** may be made of Au, Go, Ni, Ni alloy, or any combination thereof.

Reference is made to FIG. **2**. In one or more embodiment, the probe head may further include a plurality of seeds **500** if the base layer **400** and the composite coating layer **300** are formed on the plate **100** using chemical vapor deposition process. The seeds **500** are disposed between the base layer **400** and the plate **100** for enhancing the surface active at the wall of the through hole **110**, and for providing the formation of the metal layer **310** of the composite coating layer **300**. However, the claimed scope of the invention should not be limited in this respect. In other embodiments, the base layer **400** or the metal layer **310** of the composite coating layer **300** can be directly chemical coated on the plate **100** without the seeds **500** if the wall of the through hole **110** is rough enough. The base layer **400** and the composite coating layer **300** can be coated on the wall of the through hole **110** in sequence using chemical vapor deposition technique. In other words, both of the base layer **400** and the metal layer **310** of the composite coating layer **300** are metal coating layers formed using chemical vapor deposition technique. The chemical vapor deposition technique provides uniform forming layers of the base layer **400** and the composite coating layer **300** on the wall of the through hole **110**.

Moreover, the lubricating particles **320** can be added into the coating solution which is used to form the metal layer **310**, such that the coating solution can be deposited on the base layer **400** to form a portion of the metal layer **310** when coating the composite coating layer **300** using the chemical vapor deposition technique. The lubricating particles **320** in the coating solution may be adhered on this portion of the metal layer **310** if the lubricating particles **320** touch this portion of the metal layer **310**. Therefore, the quantity of the lubricating particles **320** in the metal layer **310** gets greater when the metal layer **310** is deposited inwards in the through hole **110**. Structurally, the metal layer **310** has an outer surface **312** facing the probe **200** and an inner surface **314** opposite to the outer surface **312**. The lubricating particles **320** at the outer surface **312** of the metal layer **310** are denser than the lubricating particles **320** at the inner surface **314** of the metal layer **310**. Since the lubricating particles **320** at the outer surface **312** may touch the probe **200**, the lubricating effect can be improved if the lubricating particles **320** at the outer surface **312** are denser.

Reference is made to FIG. **3** which is a top view of the plate **100** and the composite coating layer **300** according to another embodiment of the present invention. The difference between the present embodiment and the embodiment of FIG. **1**B relates to the shape of the through holes **110**. Although the through holes **110** in FIG. **1**B are circle-shaped, the through holes **110** in this embodiment can be square-shaped to accommodate square probes formed using micro electro mechanical systems (MEMS) technique.

Reference is made to FIG. **4** which is an enlarged diagram of area M of FIG. **1**A according to another embodiment of the present invention. The difference between the present embodiment and the embodiment of FIG. **2** relates to additional element of an insulating layer **600**. As mentioned above, the plate **100** may be made of non-conductors (such as ceramic), semiconductors, or conductors. In some embodiments that the plate **100** is made of semiconductors or conductors, the surfaces of the plate **100** may be insulated to prevent the probes **200** that inserted to the plate **100** from electrically interrupt from each other. The insulating layer **600** may be at least disposed between the metal layer **310** and the plate **100**. In this embodiment, the insulating layer **600** can cover the entire surface of the plate **100**.

In greater detail, through holes of a general plate are generally formed by drilling. However, the size of the through holes should be reduced as the sizes of the probes are reduced. The through holes with small sizes can not formed in the plate by drilling but other alternative methods. One of the alternative methods provides a Si substrate as the plate **100**. The through holes **110** can be formed along the crystal orientation of the Si substrate with dry etching after the Si substrate is patterned. Due to the conductivity of the Si substrate, an insulating process may be manufactured on the surfaces of the dry etched Si substrate to insulate the plate **100**. More specifically, the dry etched Si substrate can be disposed in the high temperature furnace to be oxidized, such that an oxidized insulating layer **600**, such as SiO_2, is formed on the entire surface of the Si substrate. Alternatively, an insulating material can be coated on the dry etched Si substrate, and the claimed scope of the present invention is not limited in this respect. Therefore, a manufacture of forming the composite coating layer **300** can be performed in the Si substrate with the insulating layer **600**. Although the plate **100** mentioned above is the Si substrate in this embodiment, the claimed scope of the present invention is not limited in this respect. In other embodiments, the plate **100** may be other semiconductors or conductors, such as GaN, GaAs, or InP.

Reference is made to FIG. **5** which is a cross-sectional view of the probe head according to yet another embodiment of the present invention. The difference of the present embodiment and the embodiment of FIGS. **1**A and **1**B relates the type of the probe. In this embodiment, the probe **200** is a pogo pin having a spring end **202** and a contacting end **204** opposite to each other. The contacting end **204** can be electrically connected to a device to be tested, and the spring end **202** can be connected to testing circuits **910** to transmit the signals of the pogo pin. The probe head can be disposed on a circuit board **900**. More specifically, the plate **100** of the probe head is disposed on the circuit board **900**, and the testing circuits **910** can be embedded in the circuit board **900**. The signal can be transmitted from the contacting end **204** of the probe **200** to the composite coating layer **300** when the probe **200** touches a testing point of the device, and the composite coating layer **300** can further transmit the signal to the testing circuits **910**. In this embodiment, since the signal is transmitted through the composite coating layer **300** of the pogo pin rather than through the spring end **202**, the signal loss, especially the high frequency signal loss, of the pogo pin can be improved. Other features of the probe head are the same as those of the probe head shown in FIG. **1**A, and therefore, a description in this regard will not be provided hereinafter. In general, a spatial converter board can be added between the circuit board **900** and the probe head. Some testing circuits are embedded in the spatial converter board, and each of the testing circuits has contact terminals respectively disposed at two ends of the testing circuit. In other words, a plurality of the contact terminals corresponding to each other are respectively disposed on two surfaces of the spatial converter board respectively facing the probe **200** and facing the circuit plate **900**, such that the two surfaces of the spatial converter board can be respectively electrically connected to the testing circuits **910** of the circuit board **900** and the probe **200**. A pitch of two adjacent contact terminals on the surface of the spatial converter board facing the probe **200** is less than that of the two adjacent contact terminals on the surface of the spatial converter board facing the circuit board **900**.

Moreover, Reference is made to FIGS. **1**A and **5**. The composite coating layer **300** of the embodiments of the present invention can partially disposed in the through holes **110** or completely disposed in the through holes **110** according to real requirements.

FIG. **6** is a cross-sectional view of the probe head according to yet another embodiment of the present invention, and FIG. **7** is a bottom view of the probe head of FIG. **6**. Reference is made to FIGS. **6** and **7**. The difference between the present embodiment and the embodiment of FIGS. **1**A and **1**B relates to additional element of a bypass wire **700**. In this embodiment, the plate **100** has opposite major surfaces **102** and **104**, and the through hole **110** is through the major surfaces **102** and **104**. The bypass wire **700** is disposed on at least one of the major surfaces **102** and **104**, i.e., the major surface **102** in this embodiment, and electrically connected to at least two of the composite coating layers **300**. The bypass wire **700** can touch the probe **200** through the composite coating layer **300** when the probe is inserted to the through hole **110**. As such, the current passes through the probe **200** can be spread out through the bypass wire **700** to prevent the probe **200** from burning when the probe **200** touches the testing point of the device.

In greater detail, in this embodiment, the bypass wire **700** is disposed on the major surface **102** of the plate **100**, and the bypass wire **700** includes at least one major portion **710** electrically connected to at least two of the composite coating layers **300** in series. The major portion **710** is configured for being connected to the composite coating layers **300** to form a major bypass path P**1**. The bypass wire **700** may be formed using printed wiring layout method or other proper methods.

In other embodiments, the bypass wire **700** can further include at least one minor portion **720** electrically connected to the major portion **710** in parallel, and the minor portion **720** is longer than the major portion **710**. Taking FIG. **6** as an example, the major portion **710** can be a straight-line shape, and the minor portion **720** can be substantially u-shaped. However, the claimed scope of the present invention is not limited in this respect. The two adjacent minor portions **720** can be arranged side by side, and the two minor portions **720** are respectively connected to two composite coating layers **300** next to each other, such that the minor portions **720** form a minor bypass path P**2**.

When a plurality of the probes **200** are being assembled to the plate **100**, each of the probes **200** respectively thread through the through holes **110** of the plate **100** to be respectively electrically connected to the composite coating layers **300**. As such, when the probes **200** touch the testing points of the device, the probes **200** can smoothly slide in the through holes **110** due to the coefficient of friction of the composite coating layer **300**. In addition, the probe **200** can still be electrically connected to the composite coating layer **300** even if the probe **200** is sliding. Moreover, when the probe **200** touches the testing point of the device, the current

passes through the probe **200** can flow to the bypass wire **700** through the composite coating layer **300**, and then spread out from the major bypass path P**1** formed by the major portion **710** of the bypass wire **700** and the minor bypass path P**2** formed by the minor portion **720** of the bypass wire **700**. Therefore, the bypass wire **700** can prevent the probe **200** from burning even if a high power current passes through the probe **200**, and the size of the probe **200** can be reduced to improve the testing results according to real requirements.

In this embodiment, the key features of the minor portion **720** are assisting the main portion **710** to share the current, and are provided as spares. That is, if the main portion **710** is broken due to the manufacturing defect or long-term use, the probes **200** can be connected through the minor portions **720**. However, the minor portion **720** can be omitted in the bypass wire **700**. The bypass wire **700** including the minor portion **720** can share the current, i.e., the probe **200** can bear higher power current.

The embodiments mentioned above can be applied as transmit paths of power probes. The power probe is a path that transmits power to the device when the probe head touches the device. According to the description mentioned above, the power of the device is increased. However, the radius of the power probe may be reduced to match the size of the device. Therefore, the embodiment of the present invention provides a bypass path to share the power of the testing device transmitting to the probe **200**, i.e., the power probe, through the bypass wire **700**, and the burning of the power probe can be improved.

Reference is made to FIG. **0**. In one or more embodiments, the probe head may further include a supporting board **800** disposed opposite the plate **100**. The supporting board **800** has at least one via hole **810** therein, and at least another portion of the probe **200** is disposed in the via hole **810** of the supporting board **800**. The probe **200** has a contact end **210** for being in electrical contact with a device to be tested, and the contact end **210** is closer to the plate **100** than to the supporting board **800**. In other words, the probe **200** has a top end **220** opposite to the contact end **210**, and the top end **220** is closer to the supporting board **800** than to the plate **100**. In this embodiment, the supporting board **800** may provides alignment, guiding, and supporting of the probe head. It should be noted that although the plate **100** includes bypass wire **700** in FIG. **6**, the claimed scope of the present invention is not limited in this respect. In other embodiments, the bypass wire **700** of the plate **100** can be omitted according to real requirements.

It should be noted that the probe head mentioned above can be used in the vertical probe card (VPC), and the probe **200** mentioned above can be a vertical buckling probe or a pogo pin. Since the vertical buckling probe has a body portion formed as buckling or curved shape which is not easy to be burned due to high inrush current, the probe head mentioned above can be applied to the vertical buckling probe to get a good property.

It should be noted that although the bypass wire **700** is disposed on the major surface of the plate **100** distal to the supporting board **800**, i.e., the major surface **102**, the claimed scope of the present invention is not limited in this respect. Reference is made to FIG. **8** which is a cross-sectional view of the probe head according to yet another embodiment of the present invention. The difference between the present embodiment and the embodiment of FIG. **6** relates to the position of the bypass wire **700**. In this embodiment, the bypass wire **700** is disposed on the major surface of the plate **100** proximal to the supporting board **800**, i.e., the major surface **104**. As such, the current passes through the probe **200** can be spread out through the bypass wire **700** to prevent the probe **200** from burning when the probe **200** touches the testing point of the device. Other relevant structural details of the present embodiment are all the same as the embodiment of FIG. **6**, and, therefore, a description in this regard will not be repeated hereinafter.

Reference is made to FIG. **2**. In summary, the embodiments of the present invention provide the probe head whose plate **100** includes the composite coating layer **300**. The lubricating particles **320** can prevent the probe **200** from being stuck in the through hole **110** when the probe **200** slides in the through hole **110**. The rigidity of the metal layer **310** can be selected to match the rigidity of the probe **200**, such that the wearing between the probe **200** and the plate **100** can be improved even thought the probe **200** touches the metal layer **310** of the composite coating layer **300**, and the life times of the probe **200** and the plate **100** can be both increased. The probe head can selectively include the base layer **400** and the seeds **500** to increase the adhesion between the composite coating layer **300** and the wall of the through hole **110**. Moreover, the probe head can selectively include the bypass wire **700** (see FIG. **7**) to reduce the probability of burning.

It will be apparent to those skilled in the art that various modifications and variations can be made to the structure of the present invention without departing from the scope or spirit of the invention. In view of the foregoing, it is intended that the present invention cover modifications and variations of this invention provided they fall within the scope of the following claims.

What is claimed is:

1. A probe head, comprising:

a plate having at least one through hole therein;

a probe at least partially disposed in the through hole of the plate; and

at least one composite coating layer disposed on a sidewall of the through hole of the pate, wherein the composite coating layer comprises:

a metal layer disposed in the through hole of the plate and between the plate and the probe; and

a plurality of lubricating particles dispersed in the metal layer.

2. The probe head of claim **1**, wherein the lubricating particles are made of Polytetrafluoroethene (PTFE).

3. The probe head of claim **1**, wherein the metal layer has an outer surface facing the probe and an inner surface opposite the outer surface, and the lubricating particles at the outer surface of the metal layer are denser than the lubricating particles at the inner surface of the metal layer.

4. The probe head of claim **1**, further comprising:

at least one base layer disposed between the metal layer and the plate.

5. The probe head of claim **4**, wherein the base layer and the metal layer are made of the same material.

6. The probe head of claim **4**, wherein an interface is formed between the base layer and the metal layer.

7. The probe head of claim **4**, further comprising:

a plurality of seeds disposed between the base layer and the plate.

8. The probe head of claim **1**, wherein the through hole is circle-shaped or square-shaped.

9. The probe head of claim **1** wherein the plate is made of ceramic.

10. The probe head of claim **1**, wherein the plate is made of silicon.

11. The probe head of claim **10**, further comprising:

an insulating layer disposed between the metal layer and the plate.

12. The probe head of claim **10**, further comprising:

an insulating layer covering the entire surface of the plate.

13. The probe head of claim **1**, wherein the plate has opposite major surfaces, and the through hole is through the major surfaces; and

further comprising:

at least one bypass wire disposed on at least one of the major surfaces of the plate and electrically connected to the composite coating layer.

14. The probe head of claim **13**, wherein the bypass wire is electrically connected to at least two of the composite coating layers.

15. The probe head of claim **13**, wherein the bypass wire comprises at least one major portion electrically connected to at least two of the composite coating layers in series.

16. The probe head of claim **15**, wherein the bypass wire further comprises at least one minor portion electrically connected to the major portion in parallel.

17. The probe head of claim **16**, wherein the minor portion is longer than the major portion.

18. The probe head of claim **13**, further comprising:

a supporting board disposed opposite the plate, wherein the supporting board has at least one via hole therein, at least another portion of the probe is disposed in the via hole of the supporting board, the probe has a contact end for being in electrical contact with a device to be tested, and the contact end is closer to the plate than to the supporting board.

19. The probe head of claim **18**, wherein the bypass wire is disposed at least on the major surface of the plate distal to the supporting board.

20. The probe head of claim **18**, wherein the bypass wire is disposed at least on the major surface of the plate proximal to the supporting board.

* * * * *