**UNITED STATES DISTRICT COURT**
**WESTERN DISTRICT OF TEXAS**
**WACO DIVISION**

| | |
|---|---|
| PARKERVISION, INC.,<br><br>Plaintiff,<br><br>v.<br><br>TEXAS INSTRUMENTS INCORPORATED,<br><br>Defendant. | Case No. 6:23-cv-00384-ADA<br><br>JURY TRIAL DEMANDED |

**PLAINTIFF PARKERVISION, INC.'S**
**RESPONSIVE CLAIM CONSTRUCTION BRIEF**

**Table of Exhibits**

| | |
|---|---|
| Exhibit 1 | 6:20-cv-00108-ADA – *ParkerVision, Inc. v. Intel Corporation* – ParkerVision's Opening Claim Construction Brief |
| Exhibit 2 | 6:20-cv-00870-ADA - *ParkerVision Inc. v. Hisense Co., Ltd. et al.* – ParkerVision's Responsive Claim Construction Brief |
| Exhibit 3 | 6:20-cv-00945-ADA – *ParkerVision Inc. v. TCL Industries Holdings Co., et al.* – ParkerVision's Responsive Claim Construction Brief |
| Exhibit 4 | 6:20-cv-00870-ADA – ParkerVision, Inc. v. *Hisense Co., Ltd. et al.* – Declaration of Dr. Michael Steer |
| Exhibit 5 | 6:20-cv-00945-ADA – *ParkerVision Inc. v. TCL Industries Holdings Co., et al.* – Declaration of Dr. Michael Steer |
| Exhibit 6 | 6:20-cv-00108-ADA – *ParkerVision, Inc. v. Intel Corporation* – Claim Construction Order |
| Exhibit 7 | 6:20-cv-00562-ADA – *ParkerVision, Inc. v. Intel Corporation* – Amended Claim Construction Order |
| Exhibit 8 | 6:20-cv-00870-ADA – *ParkerVision, Inc. v. Hisense Co., Ltd.*, 6:20-cv-00945-ADA – *ParkerVision Inc. v. TCL Industries Holdings Co., et al.* – Special Master's Report and Recommendation Regarding Claim Construction |
| Exhibit 9 | 6:21-cv-00520-ADA – *ParkerVision, Inc. v. LG Electronics, Inc.* – Claim Construction Order and Memorandum in Support Thereof |
| Exhibit 10 | 6:20-cv-00108-ADA – *ParkerVision, Inc. v. Intel Corporation* – ParkerVision's Responsive Claim Construction Brief |
| Exhibit 11 | Appeal No. 2022-1548 – *ParkerVision, Inc. v. Vidal* – Opinion |
| Exhibit 12 | IPR2020-01265 – Intel Corporation v. ParkerVision, Inc. – Final Written Decision |

# TABLE OF CONTENTS

**Page**

I. Introduction. ..... 1

II. Technology background. ..... 1

III. Disputed claim terms. ..... 1

A. "controlling a charging and discharging cycle" ('342 patent, claim 18) ..... 1

B. "switching device"; "switch" ('342 patent, claims 18, 19, 20, 21; '528 patent, claims 1, 5, 8, 17, 18, 19, 23, 26, 35, 36) ..... 5

C. "matched filtering/correlating module" ('177 patent, claim 14) ..... 7

D. "first channel down-converted signal" ('177 patent, claim 14) ..... 11

E. "energy storage element" ('528 patent, claims 1, 8, 9, 18, 19, 26, 27, 36) ..... 13

1. The intrinsic evidence supports the Court's prior construction. ..... 14

2. TI's construction is technically and legally wrong. ..... 17

F. "the energy discharged during any given discharge cycle is not completely discharged" ('528 patent, claims 9, 27) ..... 19

G. "a second differential amplifier circuit that combines said down-converted quadrature-phase baseband signal portion with said down-converted differential quadrature-phase baseband signal portion and outputs a second channel down-converted differential quadrature- phase baseband signal" ('528 patent, claim 19) ..... 22

# TABLE OF AUTHORITIES

**Page(s)**

**Cases**

*CBT Flint Partners, LLC v. Return Path, Inc.*, 654 F.3d 1353 (Fed. Cir. 2011) .....25

*Ecolab Inc. v. Paraclipse, Inc.*, 285 F.3d 1362 (Fed. Cir. 2002).....13

*Hill-Rom Servs., Inc. v. Stryker Corp.*, 755 F.3d 1367 (Fed. Cir. 2014).....12

*Intel Corp. v. VIA Techs., Inc.*, 319 F.3d 1357 (Fed. Cir. 2003).....5

*Key Pharms. v. Hercon Labs. Corp.*, 161 F.3d 709 (Fed. Cir. 1998).....5

*Liebel-Flarsheim Co. v. Medrad, Inc.*, 358 F.3d 898 (Fed. Cir. 2004).....12

*Phillips v. AWH Corp.*, 415 F.3d 1303 (Fed. Cir. 2005) (en banc).....10, 12, 13, 17

*Thorner v. Sony Computer Ent. Am. LLC*, 669 F.3d 1362 (Fed. Cir. 2012).....18

## I. Introduction.

Texas Instruments asks this Court to reconsider claim constructions that this Court has construed *multiple* times in ParkerVision's litigations with Intel, TCL, Hisense, and LG: "switch," and "the energy discharged during any given discharge cycle is not completely discharged." Each time, the Court has consistently maintained its constructions. The Court should continue to do so now. TI just reiterates the *exact same* arguments this Court has heard (and rejected) so many times before. It provides no basis showing how the Court made a mistake.

For the other terms, TI seeks constructions that *ignore* the intrinsic record, *exclude* disclosed embodiments, and avoid reading the claims in view of the specification. ParkerVision's constructions should be adopted, and TI's constructions and indefiniteness arguments rejected.

## II. Technology background.

On multiple occasions, the Court has considered the cellular/wireless technology set forth in the patents-in-suit.[1] As such, ParkerVision does not repeat its discussion of the technology here. These discussions are set forth in ParkerVision's Opening Claim Construction Brief in Case No. 6:20-cv-00108 and ParkerVision's Responsive Claim Construction Brief (and accompanying Expert Declaration) in Case Nos. 6:20-cv-00870, 6:20-cv-00945. *See* Ex. 1 ("PV 108 Op. Br.") at Sections II, III; Ex. 2 ("PV 870 Op. Br.") at Sections II, III; Ex. 3 ("PV 945 Op. Br.") at Sections II, III; Ex. 4 ("Steer 870 Decl."); Ex. 5 ("Steer 945 Decl.").

## III. Disputed claim terms.

### A. "controlling a charging and discharging cycle" ('342 patent, claim 18)

| ParkerVision's Construction | TI's Construction |
|---|---|
| Plain-and-ordinary meaning | "controlling a cycle of charging and then discharging" |

[1] The patents-in-suit in this case are U.S. Patent Nos. 7,496,342 ("the '342 patent"); 7,865,177 ("the '177 patent"); and 9,118,528 ("the '528 patent").

The language of the term is straightforward. There are no words that are unclear (nor does TI allege there are), and thus the term does not require construction. Instead, TI attempts to insert the word "then" into the term in order to import a rigid temporal sequence into the claim (i.e., a capacitor's charging period must occur *before* the discharging period). In doing so, TI changes the meaning of the term and *excludes* embodiments described in the specification.

TI's purported justification for rewriting the term is that "the alleged invention is always either charging or discharging, and never simultaneously both charging and discharging." Op. Br., 11. Not so. TI is simply cherry-picking portions of the specification to support its construction, while *purposefully omitting* others.

Independent claim 18 recites a method for down-converting an electromagnetic signal, including the step of: "controlling a charging and discharging cycle of the *first and second capacitors* with *first and second switching devices* electrically coupled to the first and second capacitors, respectively." In this context, and consistent with the specification (as discussed below), the language simply means there is a switching device for each capacitor—a first switching device controls a charging/discharging cycle of a first capacitor, and a second switching device controls a charging/discharging cycle of a second capacitor. Contrary to TI's position, the term does *not* impose a sequential order of events where a charging portion of the cycle must *precede* a discharging portion. TI's position is contrary to the specification and *reads out* embodiments.

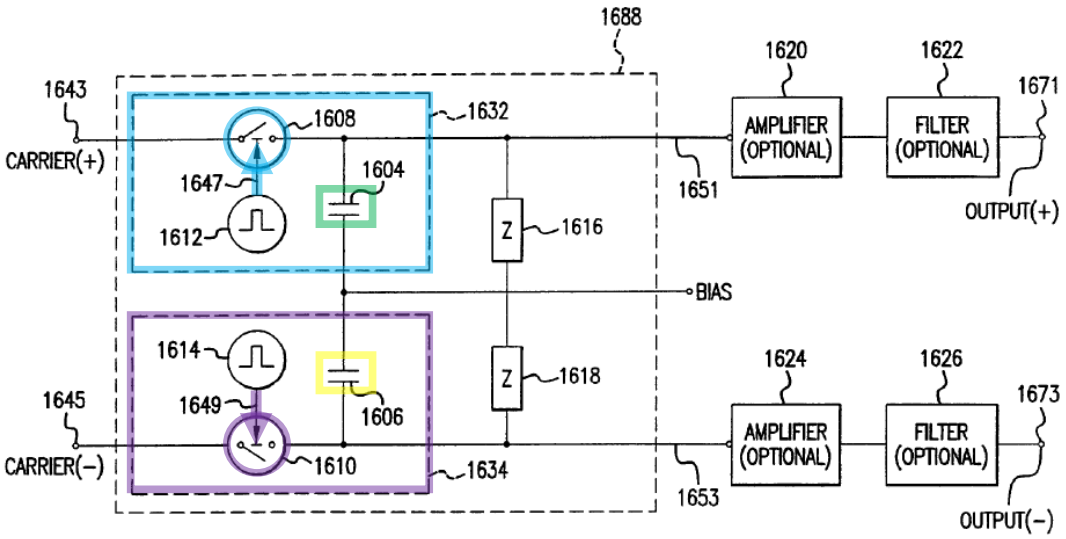


FIG.16H

As shown above, and consistent with the language of claim 18, Figure 16H of the ’342 patent illustrates an exemplary receiver having a first aliasing module 1632 (blue box) and a second aliasing module 1634 (purple box). *See* ’342 patent, 18:13-15; 20:33-39; 21:27-31. The first aliasing module 1632 (blue box) includes a first switching device 1608 (blue circle) electrically coupled to a first capacitor 1604 (green box); the second aliasing module 1634 (purple box) includes a second switching device 1610 (purple circle) electrically coupled to a second capacitor 1606 (yellow box). *Id.* at 18:34-36.

Each switching device 1608, 1610 is turned ON (closed) and OFF (opened) based on a control signal 1647, 1649, respectively. The closing and opening of each switching device 1608, 1610 controls current flow in the circuit, and thereby controls the charging and discharging of corresponding capacitors 1604, 1606, respectively. *Id.* at 49:64-50:25

For example, during an aperture of control signal 1647 (blue arrow), the first switching device 1608 (blue circle) closes, and energy from the input signal 1643 is directed to the first capacitor 1604 (green box). Between each aperture of control signal 1647, the first switching

device 1608 remains open, preventing the flow of energy through the switching device, and consequently discharging energy stored in capacitor 1604 to impedance device 1616.

Likewise, during an aperture of control signal 1649 (purple arrow), the second switching device 1610 (purple circle) closes, and energy from the inverted input signal 1645 is directed to capacitor 1606 (yellow box). Between each aperture of control signal 1649, the second switching device 1610 remains open, preventing the flow of energy through the switching device, and consequently discharging energy stored in capacitor 1606 to impedance device 1618.

Notably, the '342 specification explicitly teaches that the apertures of the control signals for the first and second switching devices "do not overlap" and are "180 degrees out of phase." *See, e.g.,* FIG. 16I, 18:59-61; 19:48-53; 20:40-43 As such, the first and second switching devices do not close (turn ON) at the same time. Instead, while one capacitor is charging (due to the closure of the first switch), the other is discharging (due to the opening of the second switch), and vice versa.

TI provides no justification to re-write the claims to exclude such embodiments (as shown, for instance, in Figures 16A and 16H(above)). By including the word "then" in its construction, TI effectively changes the meaning of the claim language and imposes synchronized charging/discharging cycles of both first and second capacitors. Not only is this not the language of the claim, but it is inconsistent with specification embodiments where charging and discharging occurs independently for each capacitor, and at different times.

For the foregoing reasons, the term should be given its plain and ordinary meaning and TI's construction, which seeks to re-write the term, should be rejected.

**B. "switching device"; "switch"** ('342 patent, claims 18, 19, 20, 21; '528 patent, claims 1, 5, 8, 17, 18, 19, 23, 26, 35, 36)

| ParkerVision's Construction | TI's Construction |
|---|---|
| Plain-and-ordinary meaning wherein the plain-and-ordinary meaning is "an electronic device for opening and closing a circuit as dictated by an independent control input" | No construction necessary/ Plain and ordinary meaning, or if construction is necessary, an electronic device which opens and closes to break or complete an electrical path in a circuit |

The dispute between the parties comes from the language that the opening and closing of the switch is "dictated by an independent control input" as set forth in ParkerVision's construction. But this language should not be controversial. This Court has already considered and construed the term *multiple* times. Each time, the Court rejected a construction similar to what TI proposes here and adopted ParkerVision's construction. *See, e.g.,* Ex. 6 ("108 CC Order") at 6; Ex. 7 ("Amended 562 CC Order") at 2; Ex. 8 ("Special Master's Rec.") at 86-88; Ex. 9 ("520 CC Order") at 32.

With prior defendants already exhausting all arguments, TI stretches to find something new to say. TI suggests that the Court using its prior construction would be "inappropriate for the patents asserted against TI here." Op. Br., 13. Not so. This Court has already considered the meaning of this exact term with respect to the '528 patent, one of the patents asserted in this case. *See, e.g.,* 108 CC Order at 6; Special Master's Rec. at 86-88; 520 CC Order at 32. TI must have missed this. Nevertheless, the intrinsic evidence is clear and supports the language "as dictated by an independent control input." [2] *See* PV 108 Op. Br. at 23-24; Ex. 10 ("PV 108 Resp.

[2] Since the intrinsic evidence does not support TI's construction, TI turns to extrinsic evidence in the form of dictionary definitions. Op. Br., 14. But relying on extrinsic evidence is improper when, as here, the intrinsic record is clear. *See, e.g., Key Pharms. v. Hercon Labs. Corp.*, 161 F.3d 709, 716 (Fed. Cir. 1998); *Intel Corp. v. VIA Techs., Inc.,* 319 F.3d 1357, 1367 (Fed. Cir. 2003) ("When an analysis of intrinsic evidence resolves any ambiguity in a disputed claim term, it is improper to rely on extrinsic evidence to contradict the meaning so ascertained.")

Br.") at 16-18.

Indeed, this Court is not the first court to adopt the language "as dictated by an independent control input" when defining a "switch" in ParkerVision's patent. The Orlando district court also used this language and rejected the same types of arguments TI raises for omitting the language. [3] D.I. 43-2 at 25-33. TI attempts to downplay the relevance of the Orlando Court's construction, arguing the '940 patent is "unrelated" and "differs substantially from the '342 and '528 Patents in this case." Op. Br., 9-10. But that is just a bare assertion, and incorrect. In fact, both the '342 and '528 patents specifically incorporate by reference the disclosure of the '940 patent. *See* '528 patent, 1:35-40; '342 patent, 1:25-27.

Notably, TI does *not* dispute that the opening/closing of the switch is dictated by a control input. Unable to come up with any other argument to address the language "as dictated by an independent control input," TI focuses on the term "independent" and complains it introduces ambiguity into the claim language. Op. Br., 15. Not only is the word "independent" clear on its face, but TI is simply wrong. The intrinsic evidence is clear; each disclosed embodiment in the '342 and '528 patents depicts a switch with an independent control input (i.e., an input, an output, and a control input). *See, e.g.,* '528 patent, Figs. 63, 64A, 64B, 65, 66A-D, 67A, 68G; '342 patent, Figs. 3A, 16A, 16H, 16O, 18A, 20A, 20E, 20F, 21.

To distract from this, TI resorts to misrepresenting the patent specifications. In particular, TI points to the '342 patent as showing some alleged dependence between the control signal and an information signal, and the '528 patent as showing some alleged dependence between the

[3] In the Orlando Court (Case No. 6:14-cv-687), the parties disputed the meaning of the term "switch" with regard to U.S. patent no. 6,091,940. The '940 patent discloses the same type of technology as set forth in the patents-in-suit. Consistent with this Court's prior construction, the Orlando Court construed "switch" to be a "device with an input and output that can take two states, open and closed, as dictated by an independent control input." D.I. 43-2 at 33.

control signal of one switch and the control signal of another switch. Op. Br., 16 (citing '342 Patent, col. 2:17-30; '528 Patent, cols. 119:10-121:40, 120:65-121:5; 76:37–179:52; 191:41–50). But even if TI's characterizations were correct (which they are not), it does not change the fact that there is always a second input (i.e., an independent control input) coming into each switch.

Moreover, consistent with the patent specifications, the claims themselves demonstrate that the "switching device"/ "switch" must have an "independent control input." Claim 1 of the '342 patent, for example, recites "a first and second *switching device* each having a first, second, *and* third port." Similarly, the '528 patent discloses an input control signal that is coupled to the switch and that is separate from the input signal (i.e., modulated carrier signal/RF signal) and output: "a first switch coupled to *a first control signal* …, wherein the first switch is on and a portion of energy that is distinguishable from noise is transferred from *the modulated carrier signal* as *an output* of said first switch" '528 patent, claim 1. Indeed, it was this type of language that the Orlando court relied on in construing "switch"/ "switch module" to include "as dictated by an independent control input." D.I. 46-15 at 32 ("a switch module having a first input connected to a bias signal, a control input connected to a control signal . . . .") (emphasis in original).

For the foregoing reasons, the Court should maintain its prior construction.

**C. "matched filtering/correlating module"** ('177 patent, claim 14)

| ParkerVision's Construction | TI's Construction |
|---|---|
| "linear time-variant circuitry that samples a modulated RF (radio frequency) carrier signal at an aliasing rate using a switch with an independent control input driven by a control signal with a non-negligible, periodic aperture, such that the samples, having non-negligible available energy, are accumulated and transferred to a load while the switch is closed and discharged through the load while | No Construction Necessary / Plain-and-ordinary meaning |

| | |
|---|---|
| the switch is open, thereby transferring available real power from the modulated RF carrier signal to the load and producing a downconverted signal with enhanced signal-to-noise power ratio" | |

The District Court for the Middle District of Florida (Orlando division) (Case No. 6:14-cv-00687) adopted ParkerVision's proposed construction here for "matched filtering/correlating module." *See* D.I. 43-2, at 10-24. The '177 specification explains that "the description of the present invention contained herein is *a unique* and *specific application* of matched filter theory, sampling theory, and frequency domain techniques. It is *not taught or suggested* in the present literature." '177 patent, 130:4-9. As such, the term is not straightforward or as plain and ordinary as TI contends.

Claim 14 of the '177 patent discloses a first and second "matched filtering/correlating module." ParkerVision's proposed construction comes directly from the specification, and captures a number of structural details, which together provide an accurate description of the '177 matched filter/correlator embodiments (as shown in Figures 149, 151, and 153) as shown below:

- **linear time-variant circuitry**: The disclosed embodiments are linear time-variant circuits. *See, e.g.,*'177 patent at Figs. 149, 151, 153; 172:50-51 ("Embodiments of the present invention can be modeled as a linear, time-variant (LTV) device.").

- **that samples a modulated RF (radio frequency) carrier signal at an aliasing rate**: The '177 Patent explains that the matched filter/correlator embodiments are designed to efficiently down-convert RF (radio frequency) signals. As explained in the "Matched Filtering/Correlating Characterization/Embodiment" section of the '177 Patent, "[t]he matched filter of such embodiments is not a traditional realization of a matched filter designed to extract information at the data bandwidth. Rather, the correlation properties of the filter of the embodiments exploit specific attributes of bandpass waveforms to *efficiently down convert signals from RF*." *Id.* at 136:46, 51-56.[4]

[4] Unless otherwise indicated, all emphasis has been added.

To down-convert signals from RF, the matched filter/correlator embodiments apply the matched filter recursively to the carrier waveform. *Id*. at 154:25-29. Each such application results in a sample. *Id*. at 154:29-31. The "matched filter output correlation contains information modulated onto the carrier. If many such matched filter correlation *samples* are extracted, the original information modulated onto the carrier is recovered." *Id*. at 140:41-46. The matched filter/correlator embodiments of Figures 171-173 (which correspond to the embodiments of Figures 149, 151, and 153 discussed above) employ "finite duration *sample* windows," "where energy or charge is the desired output." *Id*. at 145:31-33; 145:38-40; 145:46-49.

The RF waveform is sampled at an aliasing rate. An "Aspect[] of the Invention" is that "[c]ontrary to conventional wisdom, the present invention is a method and system for down-converting an electromagnetic (EM) signal by aliasing the EM signal. . . . By taking a carrier and *aliasing* it at an *aliasing* rate, the invention can down-convert that carrier to lower frequencies." *Id*. at 26:22-28.

- **using a switch with an independent control input driven by a control signal with a non-negligible, periodic aperture**: The embodiments shown in each of Figures 149, 151, and 153 include a switch (14904, 15102, and 15304, respectively) with an independent control input that controls the switch by a windowing function, $u(t) - u(t-T_A)$. *Id.* at Figs. 149, 151, 153; 131:59; 131:66-67; 133:27; 133:29-30; 134:34; 134:37-38. The aperture during which each control signal causes its switch to close has non-negligible length $T_A$ (e.g., the length of a half cycle of the carrier signal). *Id.* at 132:1-3. The aperture is periodic as it, for example, "ensures that half cycles of the carrier signal are normally operated on at a sub-harmonic rate." *Id*. at 132:3-5; 133:29-34; 134:37-42.

- **such that the samples, having non-negligible available energy**: The matched filter/correlating embodiments of the '177 Patent "convert an electromagnetic signal by repeatedly transferring energy from portions of the electromagnetic signal." *Id.* at 129:61-64. This is done by "repeatedly performing a matched filtering or correlating operation on a received carrier signal," "operat[ing] on or near approximate half-cycles (e.g., ½, 1½, 2½, etc.) of the received signal." *Id*. at 130:23-27. The energy transferred is non-negligible, because "a matched/filtering/correlating process … preserves the energy of the electromagnetic signal and transfers it through the processor." *Id.* at 130:37-39.

- **are accumulated and transferred to a significant load while the switch is closed and discharged through the load while the switch is open**: The matched filter/correlator embodiments down-convert electromagnetic signals by performing a matched filter/correlating operation repeatedly on a carrier signal. *Id.* at 130:23- 25. "The results of each matched filtering/correlating process are accumulated, for example using a capacitive storage device, and used to form a down-converted version of the electromagnetic signal." *Id*. at 130:28-31.

When the switch is closed (i.e., during the aperture period), energy is accumulated in a storage device and ultimately reaches its maximum. *Id*. at 148:17-24; Figure 175C. At the same time, energy is transferred to a load (e.g., resistor $R_L$ in Figure 175A or

resistor *R* in Figure 175B), because the load is connected across the storage device (e.g., capacitor *C* in Figure 175A or capacitor $C_S$ in Figure 175B). *Id*. at 147:35- 42, Figs. 175A-C. When the switch is opened, "the final voltage that occurred at the sampling instance $t = T_A$ becomes an initial condition for a *discharge* cycle across [the load resistor]." *Id*. at 148:1-4.

- **thereby transferring available real power from the modulated RF carrier signal to the load**: The result of energy being transferred to the load when the switch is closed and discharged through the load when the switch is open is the transfer of available real power from the modulated RF carrier signal to the load. *Id.* at 148:25-149:19. The '177 patent derives equations that describe the effect that circuit and aperture timing values have on the power transferred to the load. *Id.*

- **and producing a downconverted signal with enhanced signal-to-noise power ratio**: The matched filter/correlator embodiments produce downconverted signals with enhanced signal-to-noise power ratios. The matched filter/correlator embodiments "*downconvert an electromagnetic signal* by repeatedly performing a matched filtering or correlating operation on a received carrier signal." *Id.* at 23-25. The matched filtering/correlating operations "produce[] *enhanced* (*and in some cases the best possible) signal-to-noise ration (SNR) for the processed waveform*." *Id*. at 130:34-37.

Each component of ParkerVision's proposed construction of "matched filter/correlating module" is thus grounded in the '177 Patent's detailed descriptions of its matched filter/correlating embodiments. ParkerVision's construction is therefore consistent with the directive in *Phillips*.

Though the Court will make its own determination regarding the meaning of "matched filtering/correlating module," as mentioned above, there is prior litigation history related to this term that ParkerVision brings to the Court's attention. ParkerVision's construction of "matched filtering/correlating module" adopts the construction of the U.S. District Court for the Middle District of Florida (Orlando division) (Case No. 6:14-cv-00687), which previously construed "matched filtering/correlating module" in the context of the '177 patent. *See* D.I. 43-2, at 10-24.

For the foregoing reasons, ParkerVision's proposal is the proper construction and should be adopted by the Court.

**D. "first channel down-converted signal"** ('177 patent, claim 14)

| ParkerVision's Construction | TI's Construction |
|---|---|
| Plain-and-ordinary meaning | "An I-phase down-converted signal or a Q-phase down-converted signal" |

Claim 14 of the '177 patent recites "a first channel down-converted signal." The language of the term is straightforward. There are no words that are unclear (nor does TI allege there are) and, thus, the term does not require construction.

TI seeks to improperly re-write the term by replacing "channel" with "I-phase" or "Q-phase." In doing so, TI attempts to narrow the method for down-converting an electromagnetic signal to signals having a particular modulation scheme (I/Q modulation). But TI's position is inconsistent with the patent specification and claims.

Indeed, the '177 patent clearly shows that the patentees did *not* intend the method to be limited to only I/Q modulation, nor that "a first channel down-converted signal" be only one of two discrete channels—I-channel and Q-channel.

> The invention is applicable to ***any type of EM signal***, including but not limited to, modulated carrier signals (the invention is applicable to ***any modulation scheme or combination thereof***) and unmodulated carrier signals.

'177 patent, 3:37-40; *see also id*. at 27:18-20. TI fails to identify any lexicography or disclaimer that justifies its unduly narrow construction. Nor can it. Indeed, TI acknowledges that the specification discusses the benefits of propagating "EM signals at higher frequencies," including the ability for "*multiple* channels of baseband signals" to be communicated." Op. Br., 24 (citing '177 Patent, 2:7-12).

TI alleges that the '177 patent describes a "'Single Channel Receiver Embodiment,' in which the single channel 'correspond[s] to either the I or Q channel of [an] I/Q modulation receiver.'" Op. Br., 25 (citing '177 Patent, 183:61-64). But TI notably omits portions of the cited

disclosure that do not support its construction. Indeed, the cited portion of the specification *actually* states that "FIG. 213 illustrates *an example* single channel receiver 21300, corresponding to either the I or Q channel of I/Q modulation receiver 19700, according to *an embodiment* of the present invention." '177 patent, 183:61-64. Though, in some embodiments, the first channel down-converted signal may be an I-channel or Q-channel down-converted signal, including "I-phase…or [] Q-phase" in the construction would read out embodiments that the patentee expressly envisioned. TI is attempting to limit the claim to *exemplary* embodiments. But the Federal Circuit has repeatedly cautioned courts to "not read limitations from the embodiments in the specification into the claims." *Hill-Rom Servs., Inc. v. Stryker Corp*., 755 F.3d 1367, 1371 (Fed. Cir. 2014) (citation omitted); *see also Phillips v. AWH Corp.,* 415 F.3d 1303, 1323 (Fed. Cir. 2005) (en banc) ("[A]lthough the specification often describes very specific embodiments of the invention, we have repeatedly warned against confining the claims to those embodiments."); *Liebel-Flarsheim Co. v. Medrad, Inc.,* 358 F.3d 898, 913 (Fed. Cir. 2004) ("It is improper to read limitations from a preferred embodiment described in the specification – even if it is the only embodiment – into the claims absent a clear indication in the intrinsic record that the patentee intended the claims to be so limited."). Here, there is nothing in the intrinsic record that requires a "first channel down-converted signal" to always be either "an I-phase down-converted signal or a Q-phase down-converted signal."

In addition, and contrary to TI's position, the unasserted claims of the '177 patent do not support TI's proposed construction. Independent claim 1 uses the term "a first channel down-converted signal." Claim 5 (which depends from claim 1) uses the term "a second channel down-converted signal." Claim 12 (which depends from claims 1 and 5) further recites: "wherein said first channel down-converted signal comprises *an I-phase information signal* portion of said RF

I/Q modulated signal, and wherein said second channel down-converted signal comprises *a Q-phase information signal portion* of said RF I/Q modulate signal."

By incorporating "I-phase" and "Q-phase," TI's proposed construction violates the doctrine of claim differentiation. *See, e.g., Ecolab Inc. v. Paraclipse, Inc.*, 285 F.3d 1362, 1375 (Fed. Cir. 2002) ("Under the doctrine of claim differentiation, each claim in a patent is presumptively different in scope.") (internal quotation marks omitted). "[T]he presence of a dependent claim that adds a particular limitation gives rise to a presumption that the limitation in question is not present in the independent claim." *Phillips*, 415 F.3d at 1315. This doctrine creates a presumption that the limitation in dependent claim 12 is *not* present in claim 1 or 5.

For the foregoing reasons, the term should be given its plain and ordinary meaning and TI's construction, which seeks to re-write the term, should be rejected.

**E. "energy storage element"** ('528 patent, claims 1, 8, 9, 18, 19, 26, 27, 36)

| ParkerVision's Construction | TI's Construction |
|---|---|
| "an element of an energy transfer system that stores non-negligible amounts of energy from an input electromagnetic signal" | "an element of a system that stores non-negligible amounts of energy from an input EM signal" |

On December 15, 2023, in an appeal related to IPR2020-01265 (ParkerVision's U.S. Patent No. 7,110,444), the Federal Circuit held that "a 'storage element' is 'an element of a system that stores non-negligible amounts of energy from an input EM signal." Ex. 11 at 14. But another appeal in IPR2021-0990 relating to the same patent and claim term is currently pending before the Federal Circuit, and oral argument is set for May 9, 2024.

For the following reasons, the Court should maintain its prior construction of "energy storage element" as "an element *of an energy transfer system* that stores non-negligible amounts of energy from an input electromagnetic signal." *See* 108 CC Order at 4-5; Amended 562 CC Order at 2; Special Master's Rec. at 28-33; 520 CC Order at 12-19.

**1. The intrinsic evidence supports the Court's prior construction.**

The '528 patent discloses only two methods/systems for down-converting a signal: (1) under-sampling (sample-and-hold/voltage sampling); and (2) energy transfer (energy sampling). Though both systems use the same circuit components (e.g., switches, capacitors, loads), their respective operations are very different. *See* PV 108 Op. Br., Sections II, III; PV 870 Op. Br., Sections II, III; PV 945 Op. Br., Sections II, III; Steer 870 Decl., Section IV; Steer 945 Decl., Section IV.

To readily distinguish between the capacitors of the two systems, the specification *expressly* distinguishes the claimed "storage" module from a "holding" module, which is not claimed. The term "storage" module[5] is reserved exclusively for a component used in an energy transfer system whereas a "holding" module[6] is reserved exclusively for a component used in a sample-and-hold system. *Compare* '528 patent at 72:55-74:35 (describing an energy transfer system) *with id.* at 61:1-52 (describing a sample-and-hold system).

A "storage" module is not simply an element of any type of system. Thus, a "storage" module must be construed in a way that distinguishes it from a "holding" module. As discussed below, the distinctions between a "storage" module in an energy transfer system and a "holding" module in a sample-and-hold system are spelled out in the patent specification. Just like defendants before it, TI ignores this.

The parties agree that an energy "storage" module "stores non-negligible amounts of energy from an input electromagnetic (EM) signal." But this feature alone does not distinguish a "storage" module from a "holding" module. There is a key distinguishing feature—the "storage" module is part "of an energy transfer system." *See, e.g.,* '528 patent, 69:51-62; 72:55-74:35;

[5] "Storage module" will be used as shorthand for a "storage" element, module, or device.
[6] "Holding module" will be used as shorthand for a "holding" element, module, or device.

103:44-108:21; Figs. 65, 68A-G, 74, 82A, 82B, 95.

Unlike an energy *transfer* system which, as the name implies, *transfers* (discharges) non-negligible amounts of energy, a sample-and-*hold* system uses a high impedance load to *hold* (i.e., <u>*not*</u> transfer/discharge) voltage/charge. '528 patent, 70:19-26, 44-60. In other words, whereas a "storage" module stores energy for subsequent transfers/discharges of energy, a "holding" module is "holding a voltage value." PV 108 Op. Br. at Section III. Thus, a "storage" module is used in an "energy transfer system" and a "holding" module is used in a sample-and-*hold* system. The Court's prior construction recognizes this important distinction.

Indeed, in addition to the textual description in the specification, this distinction between "storage" and "holding" modules is readily apparent in the patent figures.

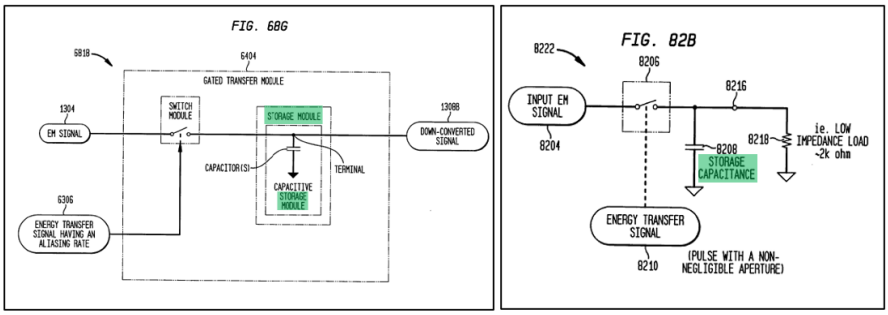


**Energy transfer system**

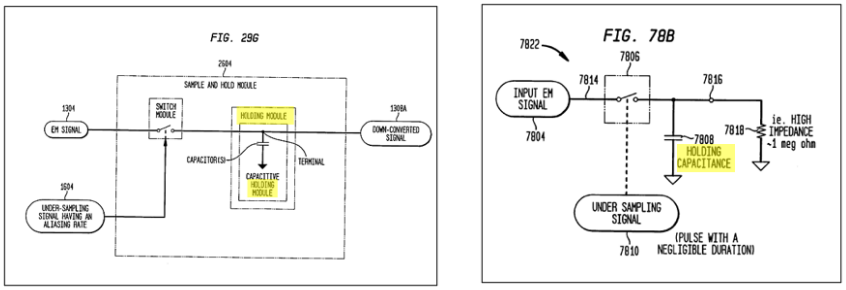


**Sample and hold system**

For example, as shown in Figures 68G and 82B above, when discussing an energy transfer system, the specification uses the term "storage" module/capacitance (green). *See also*

’528 patent at Figs. 65, 68A-G, 74, 82A, 82B, 95. On the other hand, as shown in Figures 29G and 78B above, when discussing a sample-and-hold system, the specification uses the term “holding” module/capacitance (yellow). *See also id*. at Figs. 24A, 27, 29A-G, 42, 78A, 78B. Thus, ParkerVision’s construction is consistent with this distinguishing feature and recites that the energy “storage” module is part of an “energy transfer system.”

The patent specifications and figures also refer to and identify capacitors *separately* from “storage” modules and “holding” modules. This is because a capacitor can be implemented as either a “storage” module or “holding” module depending on the system that the capacitor is used in and/or how the capacitor is used in the system.

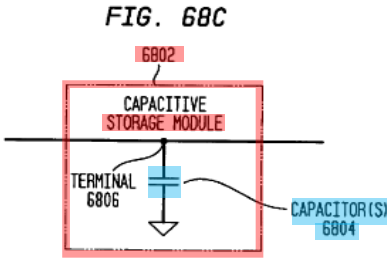


As shown in Figure 68C of the ’528 patent, the patentees draw a separate box around capacitor 6804 (blue) and label the box as storage module 6802 (red). This is because Figure 68C is a specific implementation where the capacitor is used as a module of an energy transfer system. Other figures showing a capacitor as a module of a sample-and-hold system, however, include a box around a capacitor labeled as a “holding” module. *See, e.g.,* ’528 patent, Fig. 29C.

Moreover, the term “storage” module is first introduced under a sub-section entitled “0.1.2 Introduction to *Energy Transfer*” (’528 patent, 72:55),[7] which states:

> FIG. 82A illustrates an exemplary *energy transfer system* 8202 for down-converting an input EM signal 8204. The *energy transfer system* 8202 includes a switching module 8206 and a *storage module* illustrated as a *storage* capacitance 8208. The terms *storage module and storage capacitance*, as used herein, are

[7] Unless indicated otherwise, all emphasis has been added.

> *distinguishable* from the terms *holding module and holding capacitance*, respectively. *Holding modules and holding capacitances*, as used above, ***identify systems*** that store negligible amounts of energy from an under-sampled input EM signal with the *intent of 'holding' a voltage value*. *Storage modules and storage capacitances, on the other hand,* ***refer to systems*** that store non-negligible amounts of energy from an input EM signal.

*Id.*, 73:9-22; *see also id*. at 61:1-65:43 (discussing sample-and-hold systems); 72:55-74:35; 103:44-108:21 (discussing energy transfer systems).

The green language in the passage describes a "storage" module in the context of an *energy transfer system*. The passage then provides guidance that allows a POSITA to identify whether a *system* is an energy transfer system or a sample-and-hold system based on what *component* (capacitor) is being used in that system. Specifically, the passage states that "holding" modules "*identify systems*" that store negligible amounts of energy (i.e., sample-and-hold systems) whereas "storage" modules "*refer to systems*" (i.e., identify systems) that store non-negligible amounts of energy. In other words, if a "holding" module is being used, the system is a sample-and-hold system; if a "storage" module is being used, the system is an energy transfer system. The phrase "refer to *systems*" provides a clear indication that the last sentence is not intended to define a "storage" module, which is just a mere *component* of a *system*.

Notably, like other defendants before it, TI does *not* dispute that a "storage" module is a module found only in an energy transfer system. Indeed, TI provides no *substantive* argument as to why including "*of an energy transfer system*" is wrong. Instead, TI points to the PTAB's (and Federal Circuit's) reliance on a single sentence (in red above) and asserts that this one sentence, standing alone, is enough to define the "storage" terms. As Judge Gilliland noted, this ignores *Phillips* and the patentee's full description in the specification. *See* 520 CC Order at 16-19.

**2. TI's construction is technically and legally wrong.**

TI (and the PTAB/Federal Circuit) incorrectly omits the concept that a storage module is

a component of an "energy transfer system." TI's construction would cover any system in the world that stored non-negligible amounts of energy.[8] But the patents are not that broad.

As even the PTAB admitted, (1) there are *only two* systems disclosed in the patent – energy transfer and under-sampling (sample-and-hold), (2) a "holding module" is "expressly link[ed]" to an under-sampling system. Ex. 12 at 33, 37. Logically, if there are only two systems and a "holding" element is only used in an "under-sampling" system, then a "storage" element must necessarily be "an element *of an energy transfer system*."

Just like the PTAB and the defendants before it, TI places too much emphasis on this single last sentence (in red above) to the exclusion of the complete disclosure in the specification. But TI cannot simply cast aside the distinction the patentee makes between a "storage" and "holding" module and the two distinct systems of which they are a part.

TI claims to be adhering to the patentee's lexicography, but it is *not*. The last sentence alone is *not* a lexicographic definition of "storage" module. To act as his/her own lexicographer, the patentee must "clearly set forth a definition of the disputed claim term," and "'clearly express an intent' to [define] the term." *Thorner v. Sony Computer Ent. Am. LLC*, 669 F.3d 1362, 1365 (Fed. Cir. 2012). That is not the case here. *See* 520 CC Order at 16.

Tellingly, TI modifies the so-called lexicography, changing the word "systems" to "element." This is because the specification makes clear that a "storage" element is *not* a system, but instead a type of *component* used *within* an energy transfer system. If the single last sentence were true lexicography, there would be no need for TI to modify the purported lexicography.

[8] TI's construction can lead to illogical results. If a sample-and-hold system had a module that stored non-negligible amounts of energy, under TI's construction, that module would be a "storage module." This is at odds with the patent specification, which discloses that sample-and-hold systems use "holding" modules to hold voltage (negligible amounts of energy), *not* "storage" modules.

The last sentence is part of the specification's entire teachings regarding the "storage" module. And notably, this last sentence uses the language "*on the other hand*" and "*refer to systems*" as a way to *distinguish* between a "holding" module in contrast to a "storage" module and the two different systems of which they are a part. TI completely ignores this. TI's reliance on, and misreading of the last sentence (in red above) *cannot* negate the entirety of the specification's teachings regarding the "storage" terms.

The specification and figures *repeatedly* compare/contrast energy transfer systems (which use "storage" modules) with sample-and-hold (under-sampling) systems (that use "holding" modules). Indeed, the specification devotes separate sections to compare these different systems. The specification includes a section entitled "0.1 Energy Transfer Compared to Under-Sampling" which, in turn, includes sub-sections "0.1.2 Introduction to *Energy Transfer*" (the section discussing energy transfer systems) and "0.1.1 Review of Under-sampling" (the section discussing sample-and-hold/voltage sampling systems). '528 patent, 17:13-21; *see also id.* at 69:26-74:35. The sentence that TI relies on for lexicography is found in sub-section "0.1.2 Introduction to *Energy Transfer*" and includes the language "on the other hand" when comparing a storage module to a holding module. Thus, POSITA would understand that the sentence TI relies on is comparative, *not* definitional.

For the foregoing reasons, the Court should maintain its prior construction.

### F. "the energy discharged during any given discharge cycle is not completely discharged" ('528 patent, claims 9, 27)

| ParkerVision's Construction | TI's Construction |
|---|---|
| Plain-and-ordinary meaning wherein the plain-and-ordinary meaning is "the energy that could potentially be discharged during any given discharge cycle is not completely discharged" | No construction necessary / Plain and ordinary meaning |

The Court already construed this term twice in ParkerVision's litigations against Intel and LG involving the *same* patent. In both cases, the Court construed the term as "plain-and-ordinary meaning." But in Case No. 6:20-cv-00180 ("the Intel-108 case"), this Court provided additional clarification, construing the term as "Plain-and-ordinary meaning wherein the plain-and-ordinary meaning is 'the energy that could potentially be discharged during any given discharge cycle is not completely discharged.'" 108 CC Order at 7. ParkerVision's proposed construction adopts the Court's prior construction in the Intel-108 case.

TI fails to analyze the term in the context of the full claim language and in view of the specification. As shown below in Figure 82B, the orange arrow represents the discharged energy from the storage element (capacitor) 8208 (purple box) when the switch is OFF (open).

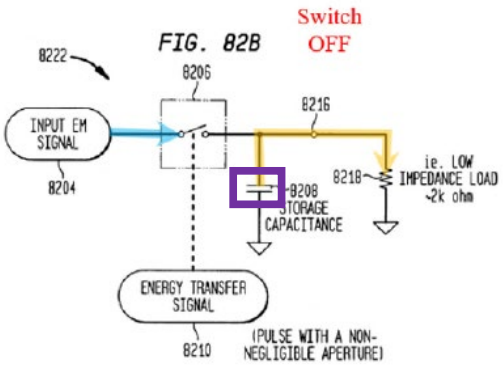


Claim 8 of the '528 patent recites "a portion of the transferred energy is discharged during the discharging part of the cycle for each respective switching device when the switching device is off." Claim 9 further recites: "for each respective storage element, the energy discharged during any given discharge cycle is not completely discharged, with the remaining undischarged energy from the given discharge cycle becoming an initial condition for the next charging cycle."

As shown below, the patent specification discusses that when the storage element

(capacitor) is not completely discharged, the energy remaining in the storage element provides the initial condition for the next charging (acquisition) cycle.

> This result is valid only over the acquisition aperture. After the switch is opened, the final voltage that occurred at the sampling instance $t \approx T_A$ becomes an initial condition for a discharge cycle across $R_L$ **17504**. The discharge cycle possesses the following response:
>
> $$V_D = \frac{V_A \cdot e^{-\frac{t}{R_L C}}}{R_L C} u(t - T_A) \text{(single event discharge)} \qquad \text{EQ. (63)}$$
>
> $V_A$ is defined as $V_O$ ($t \approx T_A$). Of course, if the capacitor **17506** does not completely discharge, there is an initial condition present for the next acquisition cycle.

'528 patent, 147:25-39.

In context, the term "the energy discharged during any given discharge cycle is not completely discharged" simply means that out of all of the energy stored in the storage element available for discharge (the energy that could potentially be discharged), not *all* of the energy is discharged during any given discharge cycle. In other words, there is some energy left in the storage element after a discharge cycle. This is consistent with the claim language, which states that "the *remaining undischarged energy* from the given discharge cycle becoming an initial condition for the next charging cycle" and the specification. In this way, for the next charging cycle, the storage element will not start with an empty tank (zero electrical charge).

The Court should maintain its prior construction from the Intel-108 case.

**G. "a second differential amplifier circuit that combines said down-converted quadrature-phase baseband signal portion with said down-converted differential quadrature-phase baseband signal portion and outputs a second channel down-converted differential quadrature- phase baseband signal"** ('528 patent, claim 19)

| ParkerVision's Construction | TI's Construction |
|---|---|
| Plain-and-ordinary meaning | Indefinite |

The term is not indefinite and should be given its plain and ordinary meaning. Independent claim 1 discloses circuitry (i.e., first and second switches, controls signals, and energy storage elements) for outputting *in-phase* baseband signal portions of the modulated carrier signal. Claim 19 (which depends from claim 1) simply adds identical, corresponding circuitry (i.e., third and fourth switches, controls signals, and energy storage elements) for outputting *quadrature-phase* baseband signal portions of the modulated carrier signal.

For example, claim 1 recites "a first energy storage element that . . . outputs a down-converted in-phase baseband signal portion of said modulated carrier signal," and claim 19 recites "a third energy storage element that . . . outputs a down-converted quadrature-phase baseband signal portion of said modulated carrier signal." The second and fourth energy storage elements were obviously intended to have this same identity and correspondence. Claim 1 recites "a second energy storage element . . . outputs a down-converted inverted in-phase baseband signal portion of said modulated carrier signal." And just as with the first and third storage elements, the fourth energy storage element was obviously intended to correspond to the second energy storage element, but with an "inverted quadrature-phase" type portion instead of an "inverted in-phase portion." But an obvious typographical error substituted the word "differential" for the word "inverted": "a fourth energy storage element that. . . outputs a down-converted differential quadrature-phase baseband signal portion of said modulated carrier signal."

The same typographical error (substituting "differential" for "inverted") persists with regard to the first and second differential amplifier circuit limitations. Claim 1 recites "a first differential amplifier circuit that combines said down-converted in-phase baseband signal portion with said down-converted inverted in-phase baseband signal portion and outputs a first channel down-converted differential in-phase baseband signal." The second differential amplifier circuit was obviously intended to correspond to the first differential amplifier circuit, but with an "inverted quadrature-phase" type portion instead of an "inverted in-phase portion." Again, however, an obvious typographical error substituted the word "differential" for the word "inverted": "a second differential amplifier circuit that combines said down-converted quadrature-phase baseband signal portion with said down-converted differential quadrature-phase baseband signal portion and outputs a second channel down-converted differential quadrature-phase baseband signal." In the context of the claims, especially considering recitations of exact same, corresponding circuitry in claim 1, a POSITA would understand "differential quadrature-phase" in claim 19 to mean "inverted quadrature-phase."

TI attempts to confuse this straightforward concept. In particular, TI argues that "[i]t is unclear what ParkerVision intended by including 'differential' with respect to the fourth capacitor; it either means what it means in claim 1, in which case it makes no sense, or it means something different, though there is nothing in the specification that explains what any such meaning could be." Op. Br., 34. But TI feigns ignorance of the term's meaning by improperly reading the term out of context and isolated from the specification.

FIG. 197

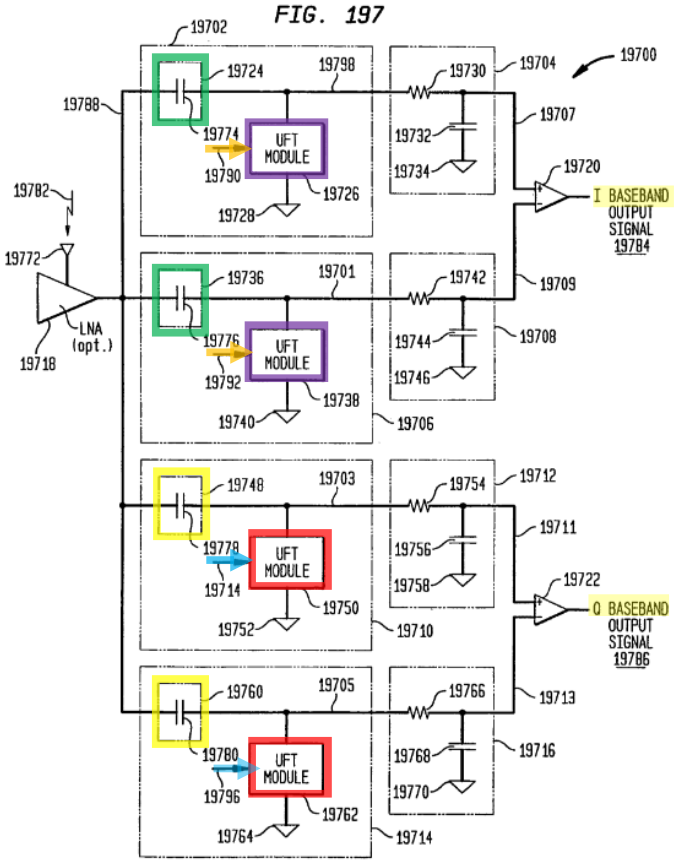


As shown above, and consistent with a proper interpretation of claim 19, Figure 197 of the ’528 patent illustrates an exemplary I/Q modulation receiver having circuitry (first and second switches (contained in UFT modules 19726, 19738, shown in the purple boxes), control signals (19774, 19776, shown by the orange arrows), and storage modules (19724, 19736, shown in the green boxes)) for outputting *in-phase* (“I”) baseband signal portions of the modulated carrier signal 19782; and identical, corresponding circuitry (third and fourth switches (contained in UFT modules 19750, 19762, and shown in the red boxes), control signals (19778, 19780, shown by the blue arrows), and storage modules (19748, 19760, shown in the yellow boxes)) for outputting *quadrature-phase* (“Q”) baseband signal portions of the modulated carrier signal 19782. ’528 patent, 176:38-179:52.

With regard to the fourth storage module, the specification further explains that "[a]s a result of the opening and closing of this switch, which respectively couples and de-couples fourth storage module 19760 to and from fourth voltage reference 19764, *a down-converted signal*, referred to as *inverted Q output signal 19705*, results." *Id.,* 179:6-10. The specification also states that the "[s]econd differential amplifier 19722 receives filtered Q output signal 19711 at its non-inverting input and receives filtered *inverted Q output signal* 19713 at its inverting input." *Id.,* 179:34-36

To the extent the Court deems it necessary to clarify the term, the Court has the authority to correct the term by replacing "*differential* quadrature-phase" with "*inverted* quadrature-phase." *See, e.g., CBT Flint Partners, LLC v. Return Path, Inc*., 654 F.3d 1353, 1358 (Fed. Cir. 2011). This correction is not subject to reasonable debate; it is the *only* reasonable interpretation of the term in view of the surrounding claim language and the specification. For the foregoing reasons, the term is not indefinite and should be given its plain and ordinary meaning.

Dated: March 27, 2024

Respectfully submitted,

*/s/ Jason S. Charkow*

Raymond W. Mort, III
Texas State Bar No. 00791308
THE MORT LAW FIRM, PLLC
501 Congress Avenue, Suite 150
Austin, Texas 78701
Tel/Fax: 512-865-7950
raymort@austinlaw.com

OF COUNSEL:
Ronald M. Daignault* (*pro hac vice*)
Chandran Iyer (*pro hac vice*)
Jason Charkow* (*pro hac vice*)
Scott Samay* (*pro hac vice*)
Stephanie Mandir (*pro hac vice*)
DAIGNAULT IYER LLP
8618 Westwood Center Drive Suite 150

Vienna, VA 22182
rdaignault@daignaultiyer.com
cbiyer@daignaultiyer.com
jcharkow@daignaultiyer.com
ssamay@daignaultiyer.com
smandir@daignaultiyer.com

*Not admitted in Virginia