IN THE UNITED STATES PATENT AND TRADEMARK OFFICE

DECLARATION OF MAUREEN M. HONEYCUTT

I, Maureen M. Honeycutt, declare as follows:

1. My name is Maureen M. Honeycutt. I am over 18 years of age, a resident of Texas, and competent to make this declaration.

2. I am currently employed as a Senior Paralegal at Texas Instruments Incorporated ("TI"), located in Dallas, Texas. I make this declaration based on my own knowledge, past experience, my review of the business records, discussions with other employees at TI, and my duties conducted within the ordinary course of business at TI. If called upon, I could and would testify to all facts stated in this declaration. I am not being compensated outside of my regular salary for my time spent working on this matter. My compensation is not in any way tied to the content of this Declaration, the substance of my opinions, or the outcome of this proceeding.

3. TI is a corporation with its corporate headquarters and principal place of business in Dallas, Texas.

4. I have worked for TI since 1984 in the Law Department as a Paralegal. My responsibilities at TI include researching and collecting technical publications of TI.

5. TI is, and was in the late 1990s, a leading global semiconductor design and manufacturing company. The publication of technical information, including datasheets and databooks that describe the performance and other

characteristics of TI products, is a regular practice for TI. TI products and datasheets and databooks describing it products, were therefore widely distributed in the late 1990s throughout the United States and the world to engineers and others that make electronic devices using such components.

6. I have knowledge of TI's practices for checking in and publishing technical documents, including on TI's public website: www.ti.com.

7. For documents TI publishes, including documents published to the Internet, it is TI's usual practice to assign a literature number to the publication.

8. For each literature number assigned, TI tracks the date the literature with the assigned number is approved for publication on www.ti.com.

9. TI's usual practice is to associate each literature number with the relevant TI product(s) and/or product family(s) on www.ti.com.

10. Publications released to the internet for each associated product/product family are made available on TI's website, www.ti.com.

11. TI's website is, and was at all times relevant to this declaration, searchable.

12. Exhibit 1 hereto is a true and correct copy of Literature Number SCDS018I for the Texas Instruments datasheet titled "SN74CBT3253, Dual 1-of-4 FET multiplexer/Demutiplexer" which I obtained from TI's records. I have reviewed U.S. Patent Number 6,230,000 which refers to "Texas Instruments

SN74BCT3253D" analog multiplexer. TI's records indicate that the number "SN74BCT3253" – as opposed to "SN74CBT3253" – does not match any TI product sold and therefore the patent appears to be referring to "SN74CBT3253."

13. Exhibit 2 hereto is a true and correct copy of Texas Instruments' Channel Media Authorization Change History for SCDS018I, which I obtained from TI's records. This document includes two entries for the SCDS018I datasheet: an Internet "Date to Add" of July 28, 1998, and a "Date of Withdraw" as June 1, 2000. Based on TI's regular practice, once an Internet "Date to Add" for a document is entered, the document was available on TI's website within 24 hours of that "Date to Add" date. Similarly, once a "Date to Withdraw" for a document is entered, the document is removed from the Internet within 24 hours of that "Date to Withdraw" date.

14. Accordingly, SCDS018I datasheet (Exhibit 1) was available to the public within 24 hours of July 28, 1998. The SCDS018I datasheet (Exhibit 1) remained available to the public on TI's website until June 1, 2000, when it was replaced by a new revision, i.e. Literature Number SCDS018J. During that period, SCDS018I datasheet (Exhibit 1) was available for download at www.ti.com at no cost. Users were not required to sign up for an account, or "log-in," to download the SCDS018I datasheet (Exhibit 1).

15. In addition to publishing datasheets for TI products on its public website www.ti.com, in the 1990's TI regularly published collections of its datasheets in "databooks." TI databooks were generally made available to the public at no cost, including TI's customers and others interested in the operation of TI's products. Print versions of TI databooks were available upon request.

16. Exhibit 3 is a true and correct copy of Literature Number SCDD001B for the TI databook titled "CBT (5-V) and CBTLV (3.3-V) Bus Switches Data Book" which I obtained from TI records. Exhibit 3 has a 1998 copyright date and is dated December 1998. As Exhibit 3 states: "The CBT (5-V) and CBTLV (3.3-V) Bus Switches Data Book includes a comprehensive listing of the industry's standard for bus-switch technology, product offerings, and availability."

17. As of December 1998, it was TI's regular practice to have databooks like SCDD001B (Exhibit 3) printed so that they could be distributed to TI customers and others interested in the operation of TI products. Exhibit 4 is a true and correct copy of a November 20, 1998, email containing the print ticket for SCDD001B (Exhibit 3) which I obtained from TI's records. Exhibit 4 shows that the printing of 8,000 copies of SCDD001B (Exhibit 3) was to be completed by December 18, 1998. Of those 8,000 copies, 90 were to be shipped to TI in Dallas, Texas; 150 were to be shipped to TI in Sherman, Texas; 1,650 were shipped overseas, and the remaining 6,110 copies were to be shipped to the Hibbert Group

in Denver, Colorado for fulfillment requests. Exhibit 4 lists an "in stock date" for SCDD001B (Exhibit 3) estimated between December 24, 1998 and not later than December 31, 1998. After a reasonable search, I could find nothing in TI's records that would suggest that copies of SCDD001B (Exhibit 3) were not in stock at least as early as December 31, 1998, and available for customer requests. Accordingly, to the best of my knowledge, the SCDD001B databook (Exhibit 3) was available to the public, including TI customers and others interested in the operation of TI products, at least as early as December 31, 1998.

18. I hereby declare that all statements made of my own knowledge are true and that all statements made on information and belief are believed to be true. I further declare that these statements were made with the knowledge that willful false statements and the like so made are punishable by fine or imprisonment, or both, under Section 1001 of the Title 18 of the United States Code and that such willful false statements may jeopardize the validity of the application or any patents issued thereon.

Dated: 4-24-2024 By: Maureen M. Honeycutt

Maureen M. Honeycutt
Senior Paralegal
Texas Instruments
13588 N. Central Expressway
Dallas, TX 75243

EXHIBIT 1

SCDS018I – MAY 1995 – REVISED MAY 1998

- **Functionally Equivalent to QS3253**
- **5-Ω Switch Connection Between Two Ports**
- **TTL-Compatible Input Levels**
- **Package Options Include Plastic Small-Outline (D), Shrink Small-Outline (DB, DBQ), Thin Very Small-Outline (DGV), and Thin Shrink Small-Outline (PW) Packages**

D, DB, DBQ, DGV, OR PW PACKAGE
(TOP VIEW)

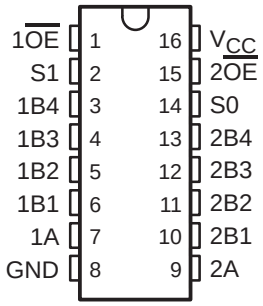

description

The SN74CBT3253 is a dual 1-of-4 high-speed TTL-compatible FET multiplexer/demultiplexer. The low on-state resistance of the switch allows connections to be made with minimal propagation delay.

1$\overline{OE}$, 2$\overline{OE}$, S0, and S1 select the appropriate B output for the A-input data.

The SN74CBT3253 is characterized for operation from –40°C to 85°C.

FUNCTION TABLE
(each multiplexer/demultiplexer)

INPUTS			FUNCTION
$\overline{OE}$	S1	S0	
L	L	L	A port = B1 port
L	L	H	A port = B2 port
L	H	L	A port = B3 port
L	H	H	A port = B4 port
H	X	X	Disconnect

Please be aware that an important notice concerning availability, standard warranty, and use in critical applications of Texas Instruments semiconductor products and disclaimers thereto appears at the end of this data sheet.

PRODUCTION DATA information is current as of publication date. Products conform to specifications per the terms of Texas Instruments standard warranty. Production processing does not necessarily include testing of all parameters.

Copyright © 1998, Texas Instruments Incorporated

logic diagram (positive logic)

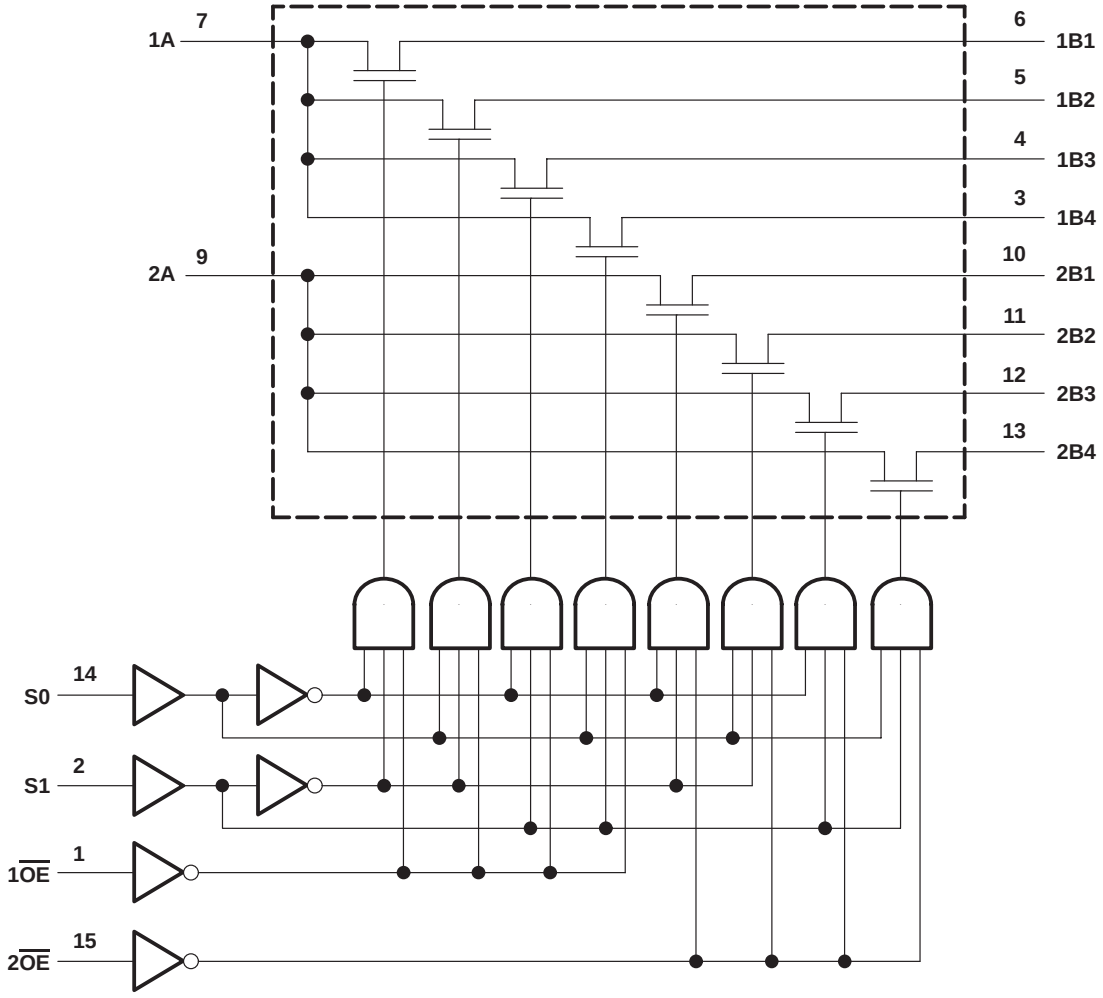

absolute maximum ratings over operating free-air temperature range (unless otherwise noted)†

Supply voltage range, V_{CC}	–0.5 V to 7 V
Input voltage range, V_I (see Note 1)	–0.5 V to 7 V
Continuous channel current	128 mA
Input clamp current, I_K ($V_{I/O} < 0$)	–50 mA
Package thermal impedance, θ_{JA} (see Note 2): D package	113°C/W
DB package	131°C/W
DBQ package	139°C/W
DGV package	180°C/W
PW package	149°C/W
Storage temperature range, T_{stg}	–65°C to 150°C

† Stresses beyond those listed under “absolute maximum ratings” may cause permanent damage to the device. These are stress ratings only, and functional operation of the device at these or any other conditions beyond those indicated under “recommended operating conditions” is not implied. Exposure to absolute-maximum-rated conditions for extended periods may affect device reliability.

NOTES: 1. The input and output negative-voltage ratings may be exceeded if the input and output clamp-current ratings are observed.
2. The package thermal impedance is calculated in accordance with JESD 51.

recommended operating conditions (see Note 3)

		MIN	MAX	UNIT
V_{CC}	Supply voltage	4	5.5	V
V_{IH}	High-level control input voltage	2		V
V_{IL}	Low-level control input voltage		0.8	V
T_A	Operating free-air temperature	–40	85	°C

NOTE 3: All unused control inputs of the device must be held at V_{CC} or GND to ensure proper device operation. Refer to the TI application report, *Implications of Slow or Floating CMOS Inputs*, literature number SCBA004.

electrical characteristics over recommended operating free-air temperature range (unless otherwise noted)

PARAMETER		TEST CONDITIONS			MIN	TYP†	MAX	UNIT
V_{IK}		V_{CC} = 4.5 V,	I_I = –18 mA				–1.2	V
I_I		V_{CC} = 5 V,	V_I = 5.5 V or GND				±1	µA
I_{CC}		V_{CC} = 5.5 V,	I_O = 0,	V_I = V_{CC} or GND			3	µA
ΔI_{CC}‡	Control inputs	V_{CC} = 5.5 V,	One input at 3.4 V,	Other inputs at V_{CC} or GND			2.5	mA
C_i	Control inputs	V_I = 3 V or 0				3.5		pF
$C_{io(OFF)}$	A port	V_O = 3 V or 0,	$\overline{OE}$ = V_{CC}			10		pF
	B port					4		
r_{on}§		V_{CC} = 4 V, TYP at V_{CC} = 4 V	V_I = 2.4 V,	I_I = 15 mA				Ω
		V_{CC} = 4.5 V	V_I = 0	I_I = 64 mA		5	7	
				I_I = 30 mA		5	7	
			V_I = 2.4 V,	I_I = 15 mA		10	15	

† All typical values are at V_{CC} = 5 V (unless otherwise noted), T_A = 25°C.
‡ This is the increase in supply current for each input that is at the specified TTL voltage level rather than V_{CC} or GND.
§ Measured by the voltage drop between the A and the B terminals at the indicated current through the switch. On-state resistance is determined by the lower voltage of the two (A or B) terminals.

switching characteristics over recommended operating free-air temperature range, C_L = 50 pF (unless otherwise noted) (see Figure 1)

PARAMETER	FROM (INPUT)	TO (OUTPUT)	V_{CC} = 4 V		V_{CC} = 5 V ± 0.5 V		UNIT
			MIN	MAX	MIN	MAX	
t_{pd}¶	A or B	B or A		0.35		0.25	ns
t_{pd}	S	A or B		6.6	1.6	6.2	ns
t_{en}	S	A or B		7.1	1.3	6.3	ns
	$\overline{OE}$			7.3	1.4	6.4	
t_{dis}	S	A or B		7.9	1.1	7.4	ns
	$\overline{OE}$			7.3	2.3	7	

¶ The propagation delay is the calculated RC time constant of the typical on-state resistance of the switch and the specified load capacitance, when driven by an ideal voltage source (zero output impedance).

PARAMETER MEASUREMENT INFORMATION

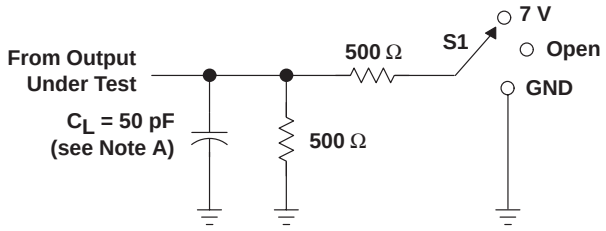

LOAD CIRCUIT

TEST	S1
t_{pd}	Open
t_{PLZ}/t_{PZL}	7 V
t_{PHZ}/t_{PZH}	Open

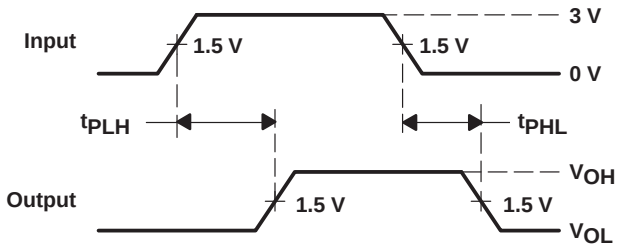

VOLTAGE WAVEFORMS
PROPAGATION DELAY TIMES

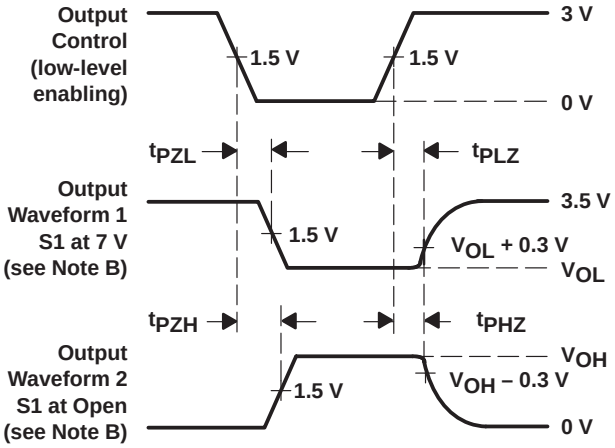

VOLTAGE WAVEFORMS
ENABLE AND DISABLE TIMES

NOTES:
A. C_L includes probe and jig capacitance.
B. Waveform 1 is for an output with internal conditions such that the output is low except when disabled by the output control. Waveform 2 is for an output with internal conditions such that the output is high except when disabled by the output control.
C. All input pulses are supplied by generators having the following characteristics: PRR ≤ 10 MHz, Z_O = 50 Ω, t_r ≤ 2.5 ns, t_f ≤ 2.5 ns.
D. The outputs are measured one at a time with one transition per measurement.
E. t_{PLZ} and t_{PHZ} are the same as t_{dis}.
F. t_{PZL} and t_{PZH} are the same as t_{en}.
G. t_{PLH} and t_{PHL} are the same as t_{pd}.

Figure 1. Load Circuit and Voltage Waveforms

IMPORTANT NOTICE

Texas Instruments and its subsidiaries (TI) reserve the right to make changes to their products or to discontinue any product or service without notice, and advise customers to obtain the latest version of relevant information to verify, before placing orders, that information being relied on is current and complete. All products are sold subject to the terms and conditions of sale supplied at the time of order acknowledgement, including those pertaining to warranty, patent infringement, and limitation of liability.

TI warrants performance of its semiconductor products to the specifications applicable at the time of sale in accordance with TI's standard warranty. Testing and other quality control techniques are utilized to the extent TI deems necessary to support this warranty. Specific testing of all parameters of each device is not necessarily performed, except those mandated by government requirements.

CERTAIN APPLICATIONS USING SEMICONDUCTOR PRODUCTS MAY INVOLVE POTENTIAL RISKS OF DEATH, PERSONAL INJURY, OR SEVERE PROPERTY OR ENVIRONMENTAL DAMAGE ("CRITICAL APPLICATIONS"). TI SEMICONDUCTOR PRODUCTS ARE NOT DESIGNED, AUTHORIZED, OR WARRANTED TO BE SUITABLE FOR USE IN LIFE-SUPPORT DEVICES OR SYSTEMS OR OTHER CRITICAL APPLICATIONS. INCLUSION OF TI PRODUCTS IN SUCH APPLICATIONS IS UNDERSTOOD TO BE FULLY AT THE CUSTOMER'S RISK.

In order to minimize risks associated with the customer's applications, adequate design and operating safeguards must be provided by the customer to minimize inherent or procedural hazards.

TI assumes no liability for applications assistance or customer product design. TI does not warrant or represent that any license, either express or implied, is granted under any patent right, copyright, mask work right, or other intellectual property right of TI covering or relating to any combination, machine, or process in which such semiconductor products or services might be or are used. TI's publication of information regarding any third party's products or services does not constitute TI's approval, warranty or endorsement thereof.

Copyright © 1998, Texas Instruments Incorporated

EXHIBIT 2

Channel Media Authorizations for Literature Number SCDS018I

Channel Name	Date to Add	Date to Withdraw
Harte Hanks POD(Europe)		
Harte Hanks POD(USA)		
Harte Hanks Paper(Europe)		
Harte Hanks Paper(USA)		
Internet	28-JUL-1998	01-JUN-2000
Internet HTML files		
TAIHEI POD(Japan)		
TAIHEI Paper(Japan)		
TI Intranet		
TI-TAIWAN		
World Publications(Shanghai)		
my.TI Registration		

Change History
Update Channel Media Authorizations

(c) Copyright *2024 Texas Instruments Incorporated. All rights reserved.*
Trademarks, Important Notice!
The Current Date and Time : *Wed Apr 24 11:01:47 Central Daylight Time 2024*

EXHIBIT 3

TEXAS INSTRUMENTS

CBT (5-V) and CBTLV (3.3-V) Bus Switches

Data Book

December 1998 **Logic Products**

General Information	1
CBT Single Gates	2
CBT (2 to 10 Bit)	3
CBT Widebus™	4
CBT With Integrated Diodes	5
CBTLV Single Gates	6
CBTLV (2 to 10 Bit)	7
CBTLV Widebus™	8
Application Reports	9
Mechanical Data	10

CBT (5-V) and CBTLV (3.3-V) Bus Switches Data Book

PRINTED WITH SOY INK™

TEXAS INSTRUMENTS

Printed on Recycled Paper

IMPORTANT NOTICE

Texas Instruments and its subsidiaries (TI) reserve the right to make changes to their products or to discontinue any product or service without notice, and advise customers to obtain the latest version of relevant information to verify, before placing orders, that information being relied on is current and complete. All products are sold subject to the terms and conditions of sale supplied at the time of order acknowledgement, including those pertaining to warranty, patent infringement, and limitation of liability.

TI warrants performance of its semiconductor products to the specifications applicable at the time of sale in accordance with TI's standard warranty. Testing and other quality control techniques are utilized to the extent TI deems necessary to support this warranty. Specific testing of all parameters of each device is not necessarily performed, except those mandated by government requirements.

CERTAIN APPLICATIONS USING SEMICONDUCTOR PRODUCTS MAY INVOLVE POTENTIAL RISKS OF DEATH, PERSONAL INJURY, OR SEVERE PROPERTY OR ENVIRONMENTAL DAMAGE ("CRITICAL APPLICATIONS"). TI SEMICONDUCTOR PRODUCTS ARE NOT DESIGNED, AUTHORIZED, OR WARRANTED TO BE SUITABLE FOR USE IN LIFE-SUPPORT DEVICES OR SYSTEMS OR OTHER CRITICAL APPLICATIONS. INCLUSION OF TI PRODUCTS IN SUCH APPLICATIONS IS UNDERSTOOD TO BE FULLY AT THE CUSTOMER'S RISK.

In order to minimize risks associated with the customer's applications, adequate design and operating safeguards must be provided by the customer to minimize inherent or procedural hazards.

TI assumes no liability for applications assistance or customer product design. TI does not warrant or represent that any license, either express or implied, is granted under any patent right, copyright, mask work right, or other intellectual property right of TI covering or relating to any combination, machine, or process in which such semiconductor products or services might be or are used. TI's publication of information regarding any third party's products or services does not constitute TI's approval, warranty or endorsement thereof.

Copyright © 1998, Texas Instruments Incorporated

INTRODUCTION

The CBT (5-V) and CBTLV (3.3-V) Bus Switches Data Book includes a comprehensive listing of the industry's standard for bus-switch technology, product offerings, and availability. These devices provide isolation when the switch is open and near-zero propagation delay when the switch is closed. Texas Instruments (TI™) bus switches provide ideal solutions for bus isolation, bus exchanging, memory interleaving, voltage translation, and docking support.

The CBTLV family is TI's new growing line of 3.3-V bus switches. Low-voltage bus switches allow for design ease in a low-voltage environment. Low voltage also means low power consumption – a key careabout for any battery-powered system.

TI's line of 5-V bus switches, the CBT family, is larger than ever. With single-gate devices, devices with integrated diodes, and Widebus™ devices available, the CBT bus-switch family offers a complete 5-V bus-switch portfolio.

TI's bus switches include 1-, 2-, 4-, 8-, 10-, 16-, 18-, 20-, and 24-bit solutions. CBT and CBTLV bus switches are designed to match the input/output combinations of traditional logic devices.

For more information on these products, including availability and pricing, please contact your local TI representative, authorized distributor, the TI technical support hotline at 972-644-5580, or visit the TI home page at http://www.ti.com/sc/logic.

For a listing of TI logic products, please order the *Logic CD-ROM* (literature number SCBC001) or *Logic Selection Guide* (literature number SDYU001) by calling the literature response center at 1-800-477-8924.

TI and Widebus are trademarks of Texas Instruments Incorporated.

PRODUCT STAGE STATEMENTS

Product stage statements are used on Texas Instruments data sheets to indicate the development stage(s) of the product(s) specified in the data sheets.

If all products specified in a data sheet are at the same development stage, the appropriate statement from the following list is placed in the lower left corner of the first page of the data sheet.

> PRODUCTION DATA information is current as of publication date. Products conform to specifications per the terms of Texas Instruments standard warranty. Production processing does not necessarily include testing of all parameters.
>
> ADVANCE INFORMATION concerns new products in the sampling or preproduction phase of development. Characteristic data and other specifications are subject to change without notice.
>
> PRODUCT PREVIEW information concerns products in the formative or design phase of development. Characteristic data and other specifications are design goals. Texas Instruments reserves the right to change or discontinue these products without notice.

If not all products specified in a data sheet are at the PRODUCTION DATA stage, then the first statement below is placed in the lower left corner of the first page of the data sheet. Subsequent pages of the data sheet containing PRODUCT PREVIEW information or ADVANCE INFORMATION are then marked in the lower left-hand corner with the appropriate statement given below:

> UNLESS OTHERWISE NOTED this document contains PRODUCTION DATA information current as of publication date. Products conform to specifications per the terms of Texas Instruments standard warranty. Production processing does not necessarily include testing of all parameters.
>
> ADVANCE INFORMATION concerns new products in the sampling or preproduction phase of development. Characteristic data and other specifications are subject to change without notice.
>
> PRODUCT PREVIEW information concerns products in the formative or design phase of development. Characteristic data and other specifications are design goals. Texas Instruments reserves the right to change or discontinue these products without notice.

General Information 1
CBT Single Gates 2
CBT (2 to 10 Bit) 3
CBT Widebus™ 4
CBT With Integrated Diodes 5
CBTLV Single Gates 6
CBTLV (2 to 10 Bit) 7
CBTLV Widebus™ 8
Application Reports 9
Mechanical Data 10

Contents

	Page
Alphanumeric Index	1–3
Device Names and Package Designators	1–5
Glossary	1–7

DEVICE	PAGE
SN74CBT1G125	2–3
SN74CBT1G384	2–15
SN74CBT3125	3–3
SN74CBT3126	3–7
SN74CBT3244	3–11
SN74CBT3245A	3–19
SN74CBT3251	3–27
SN74CBT3253	3–31
SN74CBT3257	3–39
SN74CBT3306	3–43
SN74CBT3345	3–47
SN54CBT3383 SN74CBT3383	3–51
SN74CBT3384A	3–63
SN74CBT3386	3–71
SN74CBT3390	3–75
SN74CBT3861	3–79
SN74CBT6800	3–83
SN54CBT16209 SN74CBT16209A	4–3
SN74CBT16210	4–7
SN74CBT16211A	4–15
SN54CBT16212A SN74CBT16212A	4–27
SN74CBT16213	4–35
SN74CBT16214	4–39
SN74CBT16232	4–43
SN74CBT16233	4–47
SN54CBT16244 SN74CBT16244	4–55
SN74CBT16245	4–63
SN74CBT16292	4–71
SN74CBT16390	4–79
SN74CBT16861	4–83
SN74CBT162292	4–75
SN74CBTD1G125	2–7
SN74CBTD1G384	2–19
SN74CBTD3306	5–3
SN54CBTD3384 SN74CBTD3384	5–11
SN74CBTD3861	5–21
SN74CBTD16210	5–25
SN74CBTD16211	5–31
SN74CBTD16861	5–49

DEVICE	PAGE
SN74CBTH3383	3–55
SN74CBTH16211	4–19
SN74CBTLV1G125	6–3
SN74CBTLV3125	7–3
SN74CBTLV3126	7–9
SN74CBTLV3245A	7–15
SN74CBTLV3251	7–21
SN74CBTLV3253	7–27
SN74CBTLV3257	7–33
SN74CBTLV3383	7–39
SN74CBTLV3384	7–45
SN74CBTLV3857	7–51
SN74CBTLV3861	7–55
SN74CBTLV16210	8–3
SN74CBTLV16211	8–9
SN74CBTLV16212	8–15
SN74CBTLV16235	8–21
SN74CBTLV16292	8–27
SN74CBTLV16800	8–39
SN74CBTLV162292	8–33
SN74CBTR3244	3–15
SN74CBTR3245	3–23
SN74CBTR3253	3–35
SN74CBTR3383	3–59
SN74CBTR3384	3–67
SN74CBTR16210	4–11
SN74CBTR16211	4–23
SN74CBTR16212	4–31
SN74CBTR16233	4–51
SN74CBTR16244	4–59
SN74CBTR16245	4–67
SN74CBTR16861	4–87
SN74CBTS1G125	2–11
SN74CBTS1G384	2–23
SN74CBTS3306	5–7
SN74CBTS3384	5–17
SN74CBTS16211	5–37
SN74CBTS16212	5–41
SN74CBTS16213	5–45

Example:

SN	74	CBT		16	2	292		DGG	R
1	2	3	4	5	6	7	8	9	10

1 Standard Prefix

Example: SN – Standard Prefix

2 Temperature Range

Examples: 54 – Military
74 – Commercial

3 Family

Examples: Blank – Transistor-Transistor Logic
ABT – Advanced BiCMOS Technology
ABTE – Advanced BiCMOS Technology/ Enhanced Transceiver Logic
AC/ACT – Advanced CMOS Logic
AHC/AHCT – Advanced High-Speed CMOS Logic
ALB – Advanced Low-Voltage BiCMOS
ALS – Advanced Low-Power Schottky Logic
ALVC – Advanced Low-Voltage CMOS Technology
AS – Advanced Schottky Logic
BCT – BiCMOS Bus-Interface Technology
CBT – Crossbar Technology
CBTLV – Low-Voltage Crossbar Technology
F – F Logic
FB – Backplane Transceiver Logic/Futurebus+
GTL – Gunning Transceiver Logic
HC/HCT – High-Speed CMOS Logic
HSTL – High-Speed Transceiver Logic
LS – Low-Power Schottky Logic
LV – Low-Voltage CMOS Technology
LVC – Low-Voltage CMOS Technology
LVT – Low-Voltage BiCMOS Technology
S – Schottky Logic
SSTL – Stub Series-Terminated Logic

4 Special Features

Examples: Blank = No Special Features
D – Level-Shifting Diode (CBTD)
H – Bus Hold (ALVCH)
R – Damping Resistor on Inputs/Outputs (LVCR)
S – Schottky Clamping Diode (CBTS)

5 Bit Width

Examples: Blank = Gates, MSI, and Octals
1G – Single Gate
8 – Octal IEEE Std 1149.1 (JTAG)
16 – Widebus™ (16, 18, and 20 bit)
18 – Widebus IEEE Std 1149.1 (JTAG)
32 – Widebus+™ (32 and 36 bit)

6 Options

Examples: Blank = No Options
2 – Series-Damping Resistor on Outputs
4 – Level Shifter
25 – 25-Ω Line Driver

7 Function

Examples: 244 – Noninverting Buffer/Driver
374 – D-Type Flip-Flop
573 – D-Type Transparent Latch
640 – Inverting Transceiver

8 Device Revision

Examples: Blank = No Revision
Letter Designator A–Z

9 Packages

Examples: D, DW – Small-Outline Integrated Circuit (SOIC)
DB, DBQ, DL – Shrink Small-Outline Package (SSOP)
DBB, DGV – Thin Very Small-Outline Package (TVSOP)
DBV, DCK – Small-Outline Transistor Package (SOT)
DGG, PW – Thin Shrink Small-Outline Package (TSSOP)
FK – Leadless Ceramic Chip Carrier (LCCC)
FN – Plastic Leaded Chip Carrier (PLCC)
GB – Ceramic Pin Grid Array (CPGA)
HFP, HS, HT, HV – Ceramic Quad Flat Package (CQFP)
J, JT – Ceramic Dual-In-Line Package (CDIP)
N, NP, NT – Plastic Dual-In-Line Package (PDIP)
PAG, PAH, PCA, PCB, PM, PN, PZ – Thin Quad Flat Package (TQFP)
PH, PQ, RC – Quad Flat Package (QFP)
W, WA, WD – Ceramic Flat Package (CFP)

10 Tape and Reel

All new or changed devices in the DB and PW package types include the R designation for reeled product. Existing products designated as LE presently maintain that designation, but will be converted to R in the future.

Nomenclature Examples:
For an Existing Device – SN74LVTxxxDBLE
For a New or Changed Device – SN74LVTxxxADBR

LE – Left Embossed (valid for DB and PW packages only)
R – Standard (valid for all surface-mount packages except existing DB and PW devices)

There is no functional difference between LE and R designated products, with respect to the carrier tape, cover tape, or reels used.

NOTIFICATION OF PACKAGE NOMENCLATURE ALIAS
(for Standard Linear and Logic device names of greater than 18 characters)

TI is converting from its current order-entry system to a more advanced system. This conversion requires modifications, both internal and external, to TI's current business processes. This new system will ultimately provide significant improvements to all facets of TI's business – from production, to order entry, to logistics. One change required is a limitation of TI part numbers to no more than 18 characters in length. Based on customer inputs, Standard Linear and Logic determined the least disruptive implementations as outlined below:

1. Package alias

   TI will use a package alias to denote specific package types for devices currently exceeding 18 characters in length. Table 1 shows a mapping of package codes to an alias single-character representation.

Table 1

CURRENT PACKAGE CODE	ALIAS
DL	L
DGG/DBB	G
DGV	V
DLR	LR – tape/reel packing
DGGR/DBBR	GR – tape/reel packing
DGVR	VR – tape/reel packing

Current: SN74 ALVCH 162269A DGGR
New: SN74 ALVCH 162269A GR

2. Resistor-option nomenclature

   For devices greater than 18 characters with input and output resistors, TI will adopt a simplified nomenclature to designate the resistor option. This will eliminate the redundant "2" (designating output resistors) when the part number also contains an "R" (designating input/output resistors).

Input/Output Resistor
Output Resistor

Current: SN74 ALVCH R 16 2 245 A
New: SN74 ALVCH R 16 245 A

There is no change to the device or data-sheet electrical parameters. The packages involved and the changes in nomenclature are noted in Table 1.

These nomenclature changes are being gradually implemented. The first customer-visible conversions for TI logic devices will be made to data sheets. Over the next few months, TI logic data sheets will be updated. These changes in device nomenclature do not reflect a change in device performance or process characteristics.

INTRODUCTION

These symbols, terms, and definitions are in accordance with those currently agreed upon by the JEDEC Council of the Electronic Industries Association (EIA) for use in the USA and by the International Electrotechnical Commission (IEC) for international use.

operating conditions and characteristics (in sequence by letter symbols)

C_i **Input capacitance**

The internal capacitance at an input of the device

C_{io} **Input/output capacitance**

Input-to-output internal capacitance; transcapacitance

C_o **Output capacitance**

The internal capacitance at an output of the device

C_{pd} **Power dissipation capacitance**

Used to determine the no-load dynamic power dissipation per logic function (see individual circuit pages): $P_D = C_{pd} V_{CC}^2 f + I_{CC} V_{CC}$

f_{max} **Maximum clock frequency**

The highest rate at which the clock input of a bistable circuit can be driven through its required sequence while maintaining stable transitions of logic level at the output with input conditions established that should cause changes of output logic level in accordance with the specification

I_{BHH} **Bus-hold high sustaining current**

The sourcing current of the bus-hold circuit to maintain the input at or above the minimum V_{IH}, if the last valid logic state at the input was a high

I_{BHHO} **Bus-hold high overdrive current**

The current required to overcome the sourcing current of the bus-hold circuit and switch the input to a low state

I_{BHL} **Bus-hold low sustaining current**

The sinking current of the bus-hold circuit to maintain the input at or below the maximum V_{IL}, if the last valid logic state at the input was a low

I_{BHLO} **Bus-hold low overdrive current**

The current required to overcome the sinking current of the bus-hold circuit and switch the input to a high state

I_{CC} **Supply current**

The current into* the V_{CC} supply terminal of an integrated circuit

ΔI_{CC} **Supply current change**

The increase in supply current for each input that is at one of the specified TTL voltage levels rather than 0 V or V_{CC}

I_{CEX} **Output high leakage current**

The maximum leakage current into the collector of the pulldown output transistor when the output is high and the output forcing condition V_O = 5.5 V

*Current out of a terminal is given as a negative value.

$I_{I(hold)}$ **Input hold current**

Input current that holds the input at the previous state when the driving device goes to a high-impedance state

I_{IH} **High-level input current**

The current into* an input when a high-level voltage is applied to that input

I_{IL} **Low-level input current**

The current into* an input when a low-level voltage is applied to that input

I_{off} **Input/output power-off leakage current**

The maximum leakage current into/out of the input/output transistors when forcing the input/output to 4.5 V and V_{CC} = 0 V

I_{OH} **High-level output current**

The current into* an output with input conditions applied that, according to the product specification, establishes a high level at the output

I_{OL} **Low-level output current**

The current into* an output with input conditions applied that, according to the product specification, establishes a low level at the output

I_{OZ} **Off-state (high-impedance-state) output current (of a 3-state output)**

The current that flows through the output gates when the device is in the high-impedance state

I_{OZPD} **Power-down (high-impedance-state) output current (of a 3-state output)**

The current that flows into or out of the output stage when the device is being powered down from the high-impedance state

I_{OZPU} **Power-up (high-impedance-state) output current (of a 3-state output)**

The current that flows into or out of the output stage when the device is being powered up from the high-impedance state

t_a **Access time**

The time interval between the application of a specified input pulse and the availability of valid signals at an output

t_c **Clock cycle time**

Clock cycle time is $1/f_{max}$.

t_{dis} **Disable time (of a 3-state or open-collector output)**

The propagation time between the specified reference points on the input and output voltage waveforms with the output changing from either of the defined active levels (high or low) to a high-impedance (off) state

NOTE: For 3-state outputs, $t_{dis} = t_{PHZ}$ or t_{PLZ}. Open-collector outputs change only if they are low at the time of disabling, so $t_{dis} = t_{PLH}$.

t_{en} **Enable time (of a 3-state or open-collector output)**

The propagation time between the specified reference points on the input and output voltage waveforms with the output changing from a high-impedance (off) state to either of the defined active levels (high or low)

NOTE: In the case of memories, this is the access time from an enable input (e.g., $\overline{OE}$). For 3-state outputs, $t_{en} = t_{PZH}$ or t_{PZL}. Open-collector outputs change only if they are responding to data that would cause the output to go low, so $t_{en} = t_{PHL}$.

*Current out of a terminal is given as a negative value.

t_h **Hold time**

The time interval during which a signal is retained at a specified input terminal after an active transition occurs at another specified input terminal

NOTES: 1. The hold time is the actual time interval between two signal events and is determined by the system in which the digital circuit operates. A minimum value is specified that is the shortest interval for which correct operation of the digital circuit is to be expected.

2. The hold time may have a negative value in which case the minimum limit defines the longest interval (between the release of the signal and the active transition) for which correct operation of the digital circuit is to be expected.

t_{pd} **Propagation delay time**

The time between the specified reference points on the input and output voltage waveforms with the output changing from one defined level (high or low) to the other defined level ($t_{pd} = t_{PHL}$ or t_{PLH})

t_{PHL} **Propagation delay time, high-to-low level output**

The time between the specified reference points on the input and output voltage waveforms with the output changing from the defined high level to the defined low level

t_{PHZ} **Disable time (of a 3-state output) from high level**

The time interval between the specified reference points on the input and the output voltage waveforms with the 3-state output changing from the defined high level to the high-impedance (off) state

t_{PLH} **Propagation delay time, low-to-high level output**

The time between the specified reference points on the input and output voltage waveforms with the output changing from the defined low level to the defined high level

t_{PLZ} **Disable time (of a 3-state output) from low level**

The time interval between the specified reference points on the input and the output voltage waveforms with the 3-state output changing from the defined low level to the high-impedance (off) state

t_{PZH} **Enable time (of a 3-state output) to high level**

The time interval between the specified reference points on the input and output voltage waveforms with the 3-state output changing from the high-impedance (off) state to the defined high level

t_{PZL} **Enable time (of a 3-state output) to low level**

The time interval between the specified reference points on the input and output voltage waveforms with the 3-state output changing from the high-impedance (off) state to the defined low level

$t_{sk(o)}$ **Output skew**

The difference between any two propagation delay times when a single switching input or multiple inputs switching simultaneously cause multiple outputs to switch, as observed across all switching output. This parameter is used to describe the fanout capability of a clock driver and is of concern when making decisions on clock buffering and distribution networks.

t_{su} **Setup time**

The time interval between the application of a signal at a specified input terminal and a subsequent active transition at another specified input terminal

NOTES: 1. The setup time is the actual time interval between two signal events and is determined by the system in which the digital circuit operates. A minimum value is specified that is the shortest interval for which correct operation of the digital circuit is to be expected.

2. The setup time may have a negative value, in which case the minimum limit defines the longest interval (between the active transition and the application of the other signal) for which correct operation of the digital circuit is to be expected.

t_w **Pulse duration (width)**

The time interval between specified reference points on the leading and trailing edges of the pulse waveform

$\Delta t/\Delta v$ **Input voltage transition rate**

The input transition rise or fall rate corresponding to the change in signal amplitude with time

$\Delta t/\Delta V_{CC}$ **Power supply power-up rate**

The power-up ramp rate corresponds to the transition rate of the supply voltage when the device is being powered up.

V_{IH} **High-level input voltage**

An input voltage within the more positive (less negative) of the two ranges of values used to represent the binary variables

NOTE: A minimum is specified that is the least positive value of high-level input voltage for which operation of the logic element within specification limits is to be expected.

V_{IL} **Low-level input voltage**

An input voltage within the less positive (more negative) of the two ranges of values used to represent the binary variables

NOTE: A maximum is specified that is the most positive value of low-level input voltage for which operation of the logic element within specification limits is to be expected.

V_{OH} **High-level output voltage**

The voltage at an output terminal with input conditions applied that, according to product specification, establishes a high level at the output

V_{OL} **Low-level output voltage**

The voltage at an output terminal with input conditions applied that, according to product specification, establishes a low level at the output

V_{IT+} **Positive-going input threshold level**

The voltage level at a transition-operated input that causes operation of the logic element according to specification as the input voltage rises from a level below the negative-going threshold voltage, V_{IT-}

V_{IT-} **Negative-going input threshold level**

The voltage level at a transition-operated input that causes operation of the logic element according to specification as the input voltage falls from a level above the positive-going threshold voltage, V_{IT+}

General Information 1
CBT Single Gates 2
CBT (2 to 10 Bit) 3
CBT Widebus™ 4
CBT With Integrated Diodes 5
CBTLV Single Gates 6
CBTLV (2 to 10 Bit) 7
CBTLV Widebus™ 8
Application Reports 9
Mechanical Data 10

Contents

		Page
SN74CBT1G125	Single FET Bus Switch	2–3
SN74CBTD1G125	Single FET Bus Switch With Level Shifting	2–7
SN74CBTS1G125	Single FET Bus Switch	2–11
SN74CBT1G384	Single FET Bus Switch	2–15
SN74CBTD1G384	Single FET Bus Switch With Level Shifting	2–19
SN74CBTS1G384	Single FET Bus Switch	2–23

- **5-Ω Switch Connection Between Two Ports**
- **TTL-Compatible Control Input Levels**
- **ESD Protection Exceeds 2000 V Per MIL-STD-883, Method 3015; Exceeds 200 V Using Machine Model (C = 200 pF, R = 0)**
- **Latch-Up Performance Exceeds 250 mA Per JESD 17**
- **Packaged in Plastic Small-Outline Transistor (DBV, DCK) Packages**

DBV OR DCK PACKAGE
(TOP VIEW)

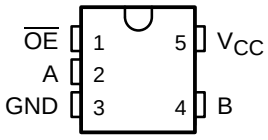

description

The SN74CBT1G125 features a single high-speed line switch. The switch is disabled when the output-enable ($\overline{OE}$) input is high.

The SN74CBT1G125 is characterized for operation from –40°C to 85°C.

FUNCTION TABLE

INPUT $\overline{OE}$	FUNCTION
L	A port = B port
H	Disconnect

logic diagram (positive logic)

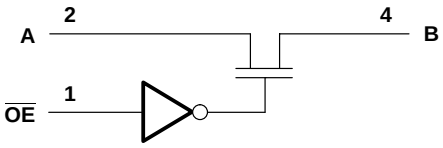

PRODUCTION DATA information is current as of publication date. Products conform to specifications per the terms of Texas Instruments standard warranty. Production processing does not necessarily include testing of all parameters.

Copyright © 1998, Texas Instruments Incorporated

absolute maximum ratings over operating free-air temperature range (unless otherwise noted)†

Supply voltage range, V_{CC} . . . . . –0.5 V to 7 V
Input voltage range, V_I (see Note 1) . . . . . –0.5 V to 7 V
Continuous channel current . . . . . 128 mA
Input clamp current, I_{IK} ($V_{I/O}$ < 0) . . . . . –50 mA
Package thermal impedance, θ_{JA} (see Note 2): DBV package . . . . . 347°C/W
DCK package . . . . . 389°C/W
Storage temperature range, T_{stg} . . . . . –65°C to 150°C

† Stresses beyond those listed under "absolute maximum ratings" may cause permanent damage to the device. These are stress ratings only, and functional operation of the device at these or any other conditions beyond those indicated under "recommended operating conditions" is not implied. Exposure to absolute-maximum-rated conditions for extended periods may affect device reliability.

NOTES: 1. The input and output negative-voltage ratings may be exceeded if the input and output clamp-current ratings are observed.
2. The package thermal impedance is calculated in accordance with JESD 51.

recommended operating conditions (see Note 3)

		MIN	MAX	UNIT
V_{CC}	Supply voltage	4	5.5	V
V_{IH}	High-level control input voltage	2		V
V_{IL}	Low-level control input voltage		0.8	V
T_A	Operating free-air temperature	–40	85	°C

NOTE 3: All unused control inputs of the device must be held at V_{CC} or GND to ensure proper device operation. Refer to the TI application report, *Implications of Slow or Floating CMOS Inputs*, literature number SCBA004.

electrical characteristics over recommended operating free-air temperature range (unless otherwise noted)

PARAMETER		TEST CONDITIONS				MIN	TYP‡	MAX	UNIT
V_{IK}		V_{CC} = 4.5 V,	I_I = –18 mA					–1.2	V
I_I		V_{CC} = 5.5 V,	V_I = 5.5 V or GND					±1	µA
I_{CC}		V_{CC} = 5.5 V,	I_O = 0,	V_I = V_{CC} or GND				1	µA
C_i	Control input	V_I = 3 V or 0					3		pF
$C_{io(OFF)}$		V_O = 3 V or 0,	$\overline{OE}$ = V_{CC}				4		pF
r_{on}§		V_{CC} = 4 V,	TYP at V_{CC} = 4 V,	V_I = 2.4 V,	I_I = 15 mA		14	20	Ω
		V_{CC} = 4.5 V	V_I = 0	I_I = 64 mA			5	7	
				I_I = 30 mA			5	7	
			V_I = 2.4 V,	I_I = 15 mA			10	15	

‡ All typical values are at V_{CC} = 5 V (unless otherwise noted), T_A = 25°C.
§ Measured by the voltage drop between the A and the B terminals at the indicated current through the switch. On-state resistance is determined by the lower of the voltages of the two (A or B) terminals.

switching characteristics over recommended operating free-air temperature range, C_L = 50 pF (unless otherwise noted) (see Figure 1)

PARAMETER	FROM (INPUT)	TO (OUTPUT)	V_{CC} = 4 V		V_{CC} = 5 V ± 0.5 V		UNIT
			MIN	MAX	MIN	MAX	
t_{pd}¶	A or B	B or A		0.35		0.25	ns
t_{en}	$\overline{OE}$	A or B		5.5	1.6	4.9	ns
t_{dis}	$\overline{OE}$	A or B		4.5	1	4.2	ns

¶ The propagation delay is the calculated RC time constant of the typical on-state resistance of the switch and the specified load capacitance, when driven by an ideal voltage source (zero output impedance).

PARAMETER MEASUREMENT INFORMATION

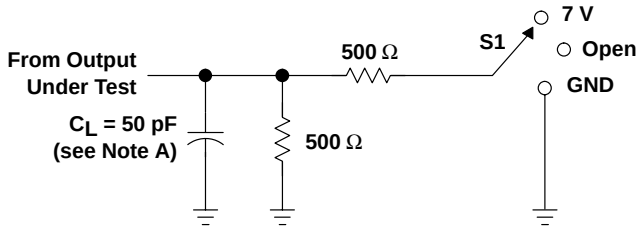

LOAD CIRCUIT

TEST	S1
t_{pd}	Open
t_{PLZ}/t_{PZL}	7 V
t_{PHZ}/t_{PZH}	Open

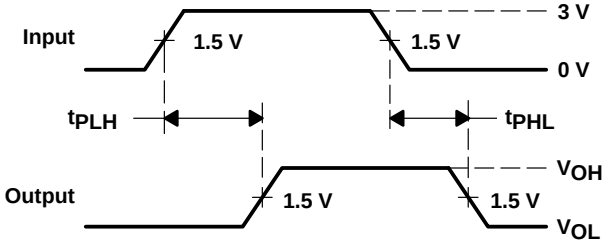

VOLTAGE WAVEFORMS
PROPAGATION DELAY TIMES

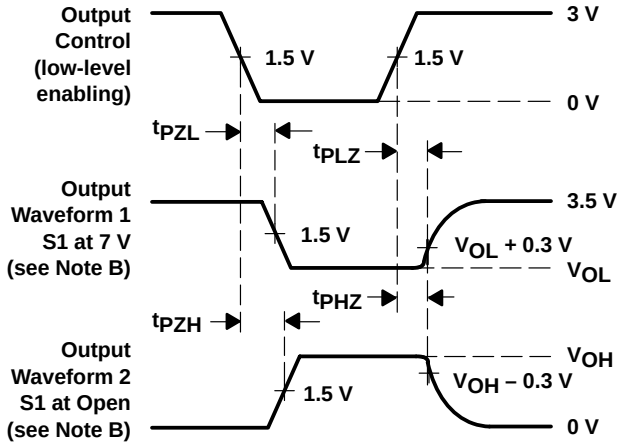

VOLTAGE WAVEFORMS
ENABLE AND DISABLE TIMES

NOTES:
A. C_L includes probe and jig capacitance.
B. Waveform 1 is for an output with internal conditions such that the output is low except when disabled by the output control. Waveform 2 is for an output with internal conditions such that the output is high except when disabled by the output control.
C. All input pulses are supplied by generators having the following characteristics: PRR ≤ 10 MHz, Z_O = 50 Ω, t_r ≤ 2.5 ns, t_f ≤ 2.5 ns.
D. The output is measured with one input transition per measurement.
E. t_{PLZ} and t_{PHZ} are the same as t_{dis}.
F. t_{PZL} and t_{PZH} are the same as t_{en}.
G. t_{PLH} and t_{PHL} are the same as t_{pd}.

Figure 1. Load Circuit and Voltage Waveforms

- **5-Ω Switch Connection Between Two Ports**
- **TTL-Compatible Control Input Levels**
- **Packaged in Plastic Small-Outline Transistor (DBV, DCK) Packages**

DBV OR DCK PACKAGE
(TOP VIEW)

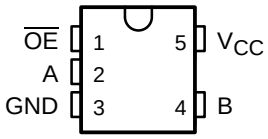

description

The SN74CBTD1G125 features a single high-speed line switch. The switch is disabled when the output-enable ($\overline{OE}$) input is high. A diode to V_{CC} is integrated on the chip to allow for level shifting between 5-V inputs and 3.3-V outputs.

The SN74CBTD1G125 is characterized for operation from –40°C to 85°C.

FUNCTION TABLE

INPUT $\overline{OE}$	FUNCTION
L	A port = B port
H	Disconnect

logic diagram (positive logic)

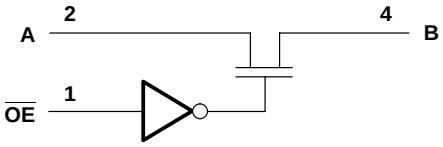

PRODUCT PREVIEW

PRODUCT PREVIEW information concerns products in the formative or design phase of development. Characteristic data and other specifications are design goals. Texas Instruments reserves the right to change or discontinue these products without notice.

Copyright © 1998, Texas Instruments Incorporated

PRODUCT PREVIEW

absolute maximum ratings over operating free-air temperature range (unless otherwise noted)†

Supply voltage range, V_{CC} . . . . . –0.5 V to 7 V
Input voltage range, V_I (see Note 1) . . . . . –0.5 V to 7 V
Continuous channel current . . . . . 128 mA
Input clamp current, I_{IK} ($V_{I/O}$ < 0) . . . . . –50 mA
Package thermal impedance, θ_{JA} (see Note 2): DBV package . . . . . 347°C/W
DCK package . . . . . 389°C/W
Storage temperature range, T_{stg} . . . . . –65°C to 150°C

† Stresses beyond those listed under "absolute maximum ratings" may cause permanent damage to the device. These are stress ratings only, and functional operation of the device at these or any other conditions beyond those indicated under "recommended operating conditions" is not implied. Exposure to absolute-maximum-rated conditions for extended periods may affect device reliability.

NOTES: 1. The input and output negative-voltage ratings may be exceeded if the input and output clamp-current ratings are observed.
2. The package thermal impedance is calculated in accordance with JESD 51.

recommended operating conditions (see Note 3)

		MIN	MAX	UNIT
V_{CC}	Supply voltage	4.5	5.5	V
V_{IH}	High-level control input voltage	2		V
V_{IL}	Low-level control input voltage		0.8	V
T_A	Operating free-air temperature	–40	85	°C

NOTE 3: All unused control inputs of the device must be held at V_{CC} or GND to ensure proper device operation. Refer to the TI application report, *Implications of Slow or Floating CMOS Inputs*, literature number SCBA004.

electrical characteristics over recommended operating free-air temperature range (unless otherwise noted)

PARAMETER		TEST CONDITIONS			MIN	TYP‡	MAX	UNIT
V_{IK}		V_{CC} = 4.5 V,	I_I = –18 mA				–1.2	V
V_{OH}		See Figure 2						
I_I		V_{CC} = 5.5 V,	V_I = 5.5 V or GND				±1	µA
I_{CC}		V_{CC} = 5.5 V,	I_O = 0,	V_I = V_{CC} or GND			1	µA
C_i	Control input	V_I = 3 V or 0						pF
$C_{io(OFF)}$		V_O = 3 V or 0,	$\overline{OE}$ = V_{CC}					pF
r_{on}§		V_{CC} = 4.5 V	V_I = 0	I_I = 64 mA				Ω
				I_I = 30 mA				
			V_I = 2.4 V,	I_I = 15 mA				

‡ All typical values are at V_{CC} = 5 V, T_A = 25°C.
§ Measured by the voltage drop between the A and the B terminals at the indicated current through the switch. On-state resistance is determined by the lower of the voltages of the two (A or B) terminals.

switching characteristics over recommended operating free-air temperature range, C_L = 50 pF (unless otherwise noted) (see Figure 1)

PARAMETER	FROM (INPUT)	TO (OUTPUT)	MIN	MAX	UNIT
t_{pd}¶	A or B	B or A			ns
t_{en}	$\overline{OE}$	A or B			ns
t_{dis}	$\overline{OE}$	A or B			ns

¶ The propagation delay is the calculated RC time constant of the typical on-state resistance of the switch and the specified load capacitance, when driven by an ideal voltage source (zero output impedance).

PARAMETER MEASUREMENT INFORMATION

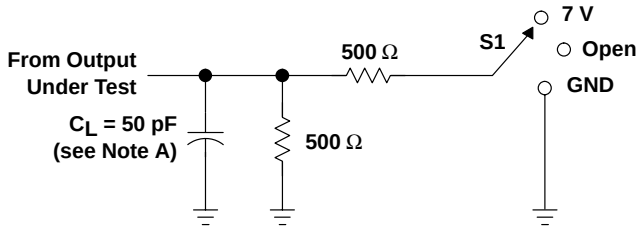

LOAD CIRCUIT

TEST	S1
t_{pd}	Open
t_{PLZ}/t_{PZL}	7 V
t_{PHZ}/t_{PZH}	Open

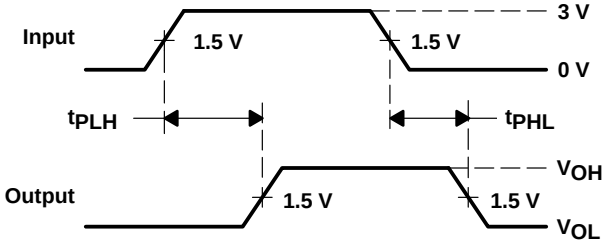

VOLTAGE WAVEFORMS
PROPAGATION DELAY TIMES

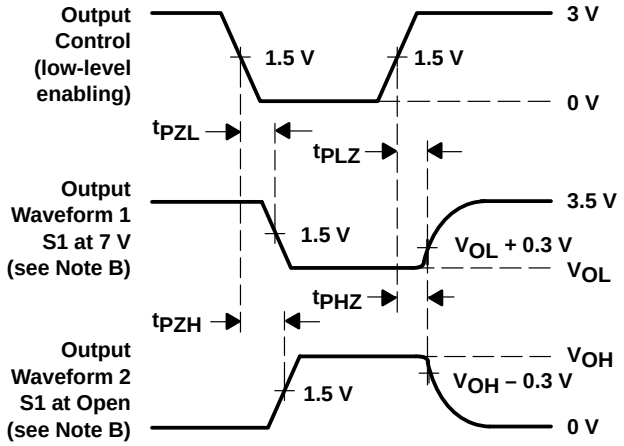

VOLTAGE WAVEFORMS
ENABLE AND DISABLE TIMES

NOTES: A. C_L includes probe and jig capacitance.
B. Waveform 1 is for an output with internal conditions such that the output is low except when disabled by the output control. Waveform 2 is for an output with internal conditions such that the output is high except when disabled by the output control.
C. All input pulses are supplied by generators having the following characteristics: PRR ≤ 10 MHz, Z_O = 50 Ω, t_r ≤ 2.5 ns, t_f ≤ 2.5 ns.
D. The output is measured with one input transition per measurement.
E. t_{PLZ} and t_{PHZ} are the same as t_{dis}.
F. t_{PZL} and t_{PZH} are the same as t_{en}.
G. t_{PLH} and t_{PHL} are the same as t_{pd}.

Figure 1. Load Circuit and Voltage Waveforms

PRODUCT PREVIEW

PRODUCT PREVIEW

TYPICAL CHARACTERISTICS

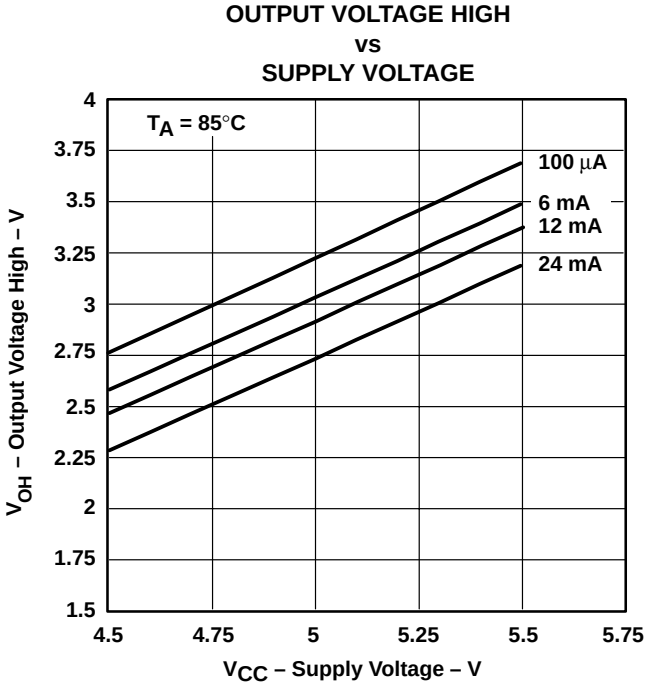

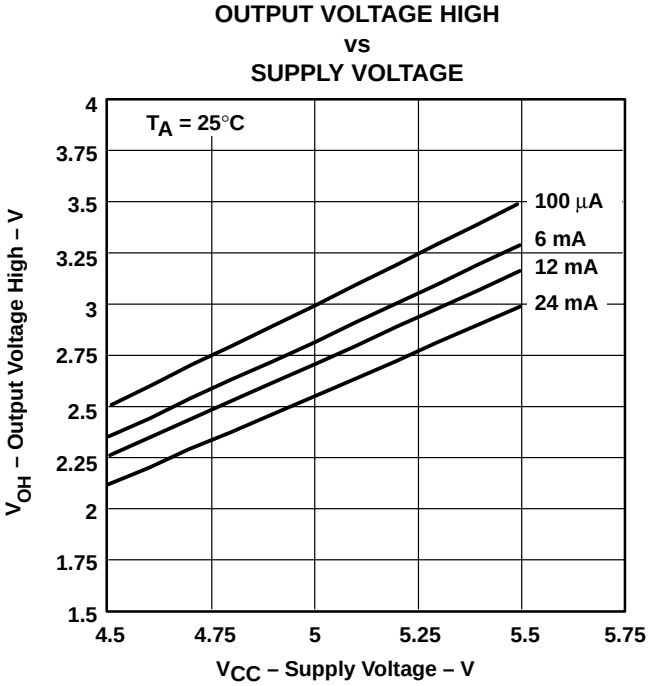

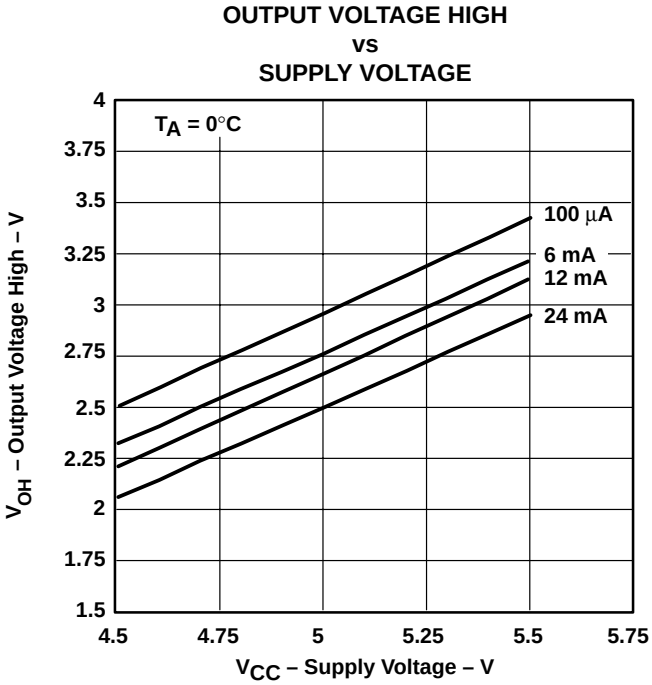

Figure 2. V_{OH} Values

- **5-Ω Switch Connection Between Two Ports**
- **TTL-Compatible Control Input Levels**
- **Packaged in Plastic Small-Outline Transistor (DBV, DCK) Packages**

DBV OR DCK PACKAGE
(TOP VIEW)

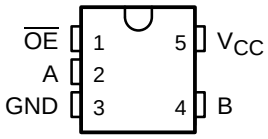

description

The SN74CBTS1G125 features a single high-speed line switch with Schottky diodes on the I/O to clamp undershoot. The switch is disabled when the output-enable ($\overline{OE}$) input is high.

The SN74CBTS1G125 is characterized for operation from –40°C to 85°C.

FUNCTION TABLE

INPUT $\overline{OE}$	FUNCTION
L	A port = B port
H	Disconnect

logic diagram (positive logic)

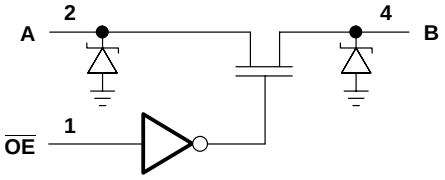

PRODUCT PREVIEW

PRODUCT PREVIEW information concerns products in the formative or design phase of development. Characteristic data and other specifications are design goals. Texas Instruments reserves the right to change or discontinue these products without notice.

Copyright © 1998, Texas Instruments Incorporated

PRODUCT PREVIEW

absolute maximum ratings over operating free-air temperature range (unless otherwise noted)†

Supply voltage range, V_{CC} . . . . . –0.5 V to 7 V
Input voltage range, V_I (see Note 1) . . . . . –0.5 V to 7 V
Continuous channel current . . . . . 128 mA
Input clamp current, I_{IK} ($V_{I/O}$ < 0) . . . . . –50 mA
Package thermal impedance, θ_{JA} (see Note 2): DBV package . . . . . 347°C/W
DCK package . . . . . 389°C/W
Storage temperature range, T_{stg} . . . . . –65°C to 150°C

† Stresses beyond those listed under "absolute maximum ratings" may cause permanent damage to the device. These are stress ratings only, and functional operation of the device at these or any other conditions beyond those indicated under "recommended operating conditions" is not implied. Exposure to absolute-maximum-rated conditions for extended periods may affect device reliability.

NOTES: 1. The input and output negative-voltage ratings may be exceeded if the input and output clamp-current ratings are observed.
2. The package thermal impedance is calculated in accordance with JESD 51.

recommended operating conditions (see Note 3)

		MIN	MAX	UNIT
V_{CC}	Supply voltage	4	5.5	V
V_{IH}	High-level control input voltage	2		V
V_{IL}	Low-level control input voltage		0.8	V
T_A	Operating free-air temperature	–40	85	°C

NOTE 3: All unused control inputs of the device must be held at V_{CC} or GND to ensure proper device operation. Refer to the TI application report, *Implications of Slow or Floating CMOS Inputs*, literature number SCBA004.

electrical characteristics over recommended operating free-air temperature range (unless otherwise noted)

PARAMETER		TEST CONDITIONS				MIN	TYP‡	MAX	UNIT
V_{IK}		V_{CC} = 4.5 V,	I_I = –18 mA					–0.7	V
I_I	I_{IL}	V_{CC} = 5.5 V	V_I = GND					–1	µA
	I_{IH}		V_I = 5.5 V					50	µA
I_{CC}		V_{CC} = 5.5 V,	I_O = 0,	V_I = V_{CC} or GND				3	µA
C_i	Control input	V_I = 3 V or 0							pF
$C_{io(OFF)}$		V_O = 3 V or 0,	$\overline{OE}$ = V_{CC}						pF
r_{on}§		V_{CC} = 4 V,	TYP at V_{CC} = 4 V,	V_I = 2.4 V,	I_I = 15 mA				Ω
		V_{CC} = 4.5 V	V_I = 0	I_I = 64 mA					Ω
				I_I = 30 mA					Ω
			V_I = 2.4 V,	I_I = 15 mA					Ω

‡ All typical values are at V_{CC} = 5 V (unless otherwise noted), T_A = 25°C.
§ Measured by the voltage drop between the A and the B terminals at the indicated current through the switch. On-state resistance is determined by the lower of the voltages of the two (A or B) terminals.

switching characteristics over recommended operating free-air temperature range, C_L = 50 pF (unless otherwise noted) (see Figure 1)

PARAMETER	FROM (INPUT)	TO (OUTPUT)	V_{CC} = 4 V		V_{CC} = 5 V ± 0.5 V		UNIT
			MIN	MAX	MIN	MAX	
t_{pd}†	A or B	B or A					ns
t_{en}	$\overline{OE}$	A or B					ns
t_{dis}	$\overline{OE}$	A or B					ns

† The propagation delay is the calculated RC time constant of the typical on-state resistance of the switch and the specified load capacitance, when driven by an ideal voltage source (zero output impedance).

PARAMETER MEASUREMENT INFORMATION

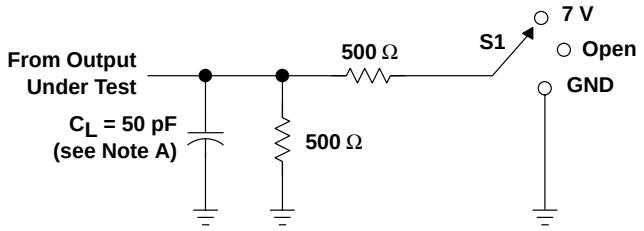

LOAD CIRCUIT

TEST	S1
t_{pd}	Open
t_{PLZ}/t_{PZL}	7 V
t_{PHZ}/t_{PZH}	Open

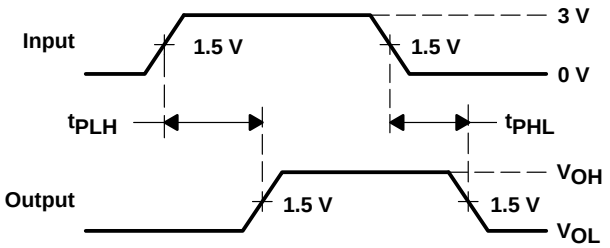

VOLTAGE WAVEFORMS
PROPAGATION DELAY TIMES

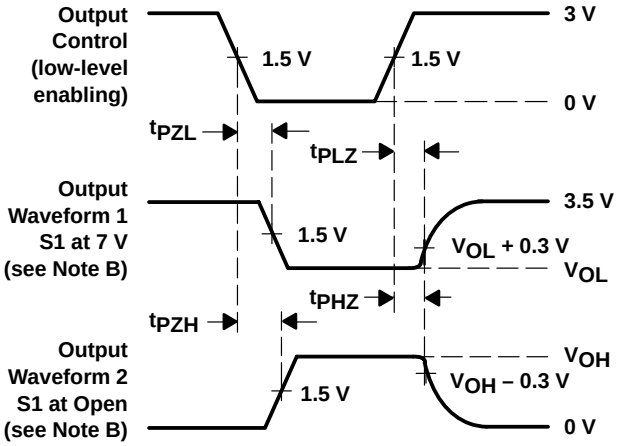

VOLTAGE WAVEFORMS
ENABLE AND DISABLE TIMES

NOTES: A. C_L includes probe and jig capacitance.
B. Waveform 1 is for an output with internal conditions such that the output is low except when disabled by the output control. Waveform 2 is for an output with internal conditions such that the output is high except when disabled by the output control.
C. All input pulses are supplied by generators having the following characteristics: PRR ≤ 10 MHz, Z_O = 50 Ω, t_r ≤ 2.5 ns, t_f ≤ 2.5 ns.
D. The output is measured with one input transition per measurement.
E. t_{PLZ} and t_{PHZ} are the same as t_{dis}.
F. t_{PZL} and t_{PZH} are the same as t_{en}.
G. t_{PLH} and t_{PHL} are the same as t_{pd}.

Figure 1. Load Circuit and Voltage Waveforms

PRODUCT PREVIEW

- **5-Ω Switch Connection Between Two Ports**
- **TTL-Compatible Control Input Levels**
- **Packaged in Plastic Small-Outline Transistor (DBV, DCK) Packages**

DBV OR DCK PACKAGE
(TOP VIEW)

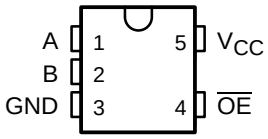

description

The SN74CBT1G384 features a single high-speed line switch. The switch is disabled when the output-enable ($\overline{OE}$) input is high.

The SN74CBT1G384 is characterized for operation from –40°C to 85°C.

FUNCTION TABLE

INPUT $\overline{OE}$	FUNCTION
L	A port = B port
H	Disconnect

logic diagram (positive logic)

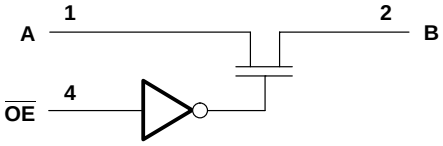

PRODUCT PREVIEW

PRODUCT PREVIEW information concerns products in the formative or design phase of development. Characteristic data and other specifications are design goals. Texas Instruments reserves the right to change or discontinue these products without notice.

Copyright © 1998, Texas Instruments Incorporated

PRODUCT PREVIEW

absolute maximum ratings over operating free-air temperature range (unless otherwise noted)†

Supply voltage range, V_{CC} . . . . . –0.5 V to 7 V
Input voltage range, V_I (see Note 1) . . . . . –0.5 V to 7 V
Continuous channel current . . . . . 128 mA
Input clamp current, I_{IK} ($V_{I/O}$ < 0) . . . . . –50 mA
Package thermal impedance, θ_{JA} (see Note 2): DBV package . . . . . 347°C/W
DCK package . . . . . 389°C/W
Storage temperature range, T_{stg} . . . . . –65°C to 150°C

† Stresses beyond those listed under "absolute maximum ratings" may cause permanent damage to the device. These are stress ratings only, and functional operation of the device at these or any other conditions beyond those indicated under "recommended operating conditions" is not implied. Exposure to absolute-maximum-rated conditions for extended periods may affect device reliability.

NOTES: 1. The input and output negative-voltage ratings may be exceeded if the input and output clamp-current ratings are observed.
2. The package thermal impedance is calculated in accordance with JESD 51.

recommended operating conditions (see Note 3)

		MIN	MAX	UNIT
V_{CC}	Supply voltage	4	5.5	V
V_{IH}	High-level control input voltage	2		V
V_{IL}	Low-level control input voltage		0.8	V
T_A	Operating free-air temperature	–40	85	°C

NOTE 3: All unused control inputs of the device must be held at V_{CC} or GND to ensure proper device operation. Refer to the TI application report, *Implications of Slow or Floating CMOS Inputs*, literature number SCBA004.

electrical characteristics over recommended operating free-air temperature range (unless otherwise noted)

PARAMETER		TEST CONDITIONS				MIN	TYP‡	MAX	UNIT
V_{IK}		V_{CC} = 4.5 V,	I_I = –18 mA					–1.2	V
I_I		V_{CC} = 5.5 V,	V_I = 5.5 V or GND					±1	µA
I_{CC}		V_{CC} = 5.5 V,	I_O = 0,	V_I = V_{CC} or GND				1	µA
C_i	Control input	V_I = 3 V or 0							pF
$C_{io(OFF)}$		V_O = 3 V or 0,	$\overline{OE}$ = V_{CC}						pF
r_{on}§		V_{CC} = 4 V,	TYP at V_{CC} = 4 V,	V_I = 2.4 V,	I_I = 15 mA				Ω
		V_{CC} = 4.5 V	V_I = 0	I_I = 64 mA					Ω
				I_I = 30 mA					Ω
			V_I = 2.4 V,	I_I = 15 mA					Ω

‡ All typical values are at V_{CC} = 5 V (unless otherwise noted), T_A = 25°C.
§ Measured by the voltage drop between the A and the B terminals at the indicated current through the switch. On-state resistance is determined by the lower of the voltages of the two (A or B) terminals.

switching characteristics over recommended operating free-air temperature range, C_L = 50 pF (unless otherwise noted) (see Figure 1)

PARAMETER	FROM (INPUT)	TO (OUTPUT)	V_{CC} = 4 V		V_{CC} = 5 V ± 0.5 V		UNIT
			MIN	MAX	MIN	MAX	
t_{pd}¶	A or B	B or A					ns
t_{en}	$\overline{OE}$	A or B					ns
t_{dis}	$\overline{OE}$	A or B					ns

¶ The propagation delay is the calculated RC time constant of the typical on-state resistance of the switch and the specified load capacitance, when driven by an ideal voltage source (zero output impedance).

PARAMETER MEASUREMENT INFORMATION

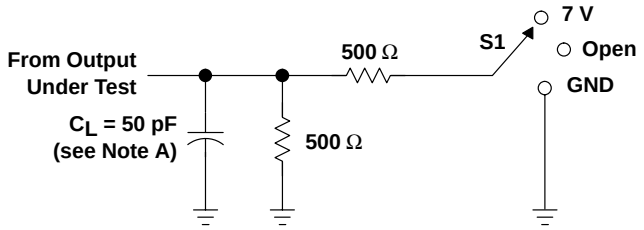

LOAD CIRCUIT

TEST	S1
t_{pd}	Open
t_{PLZ}/t_{PZL}	7 V
t_{PHZ}/t_{PZH}	Open

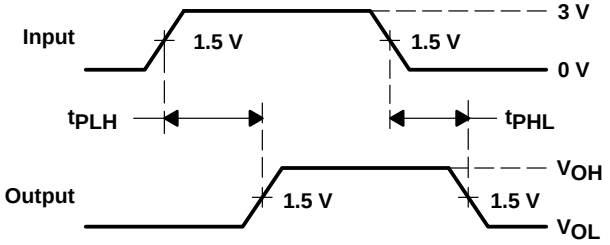

VOLTAGE WAVEFORMS
PROPAGATION DELAY TIMES

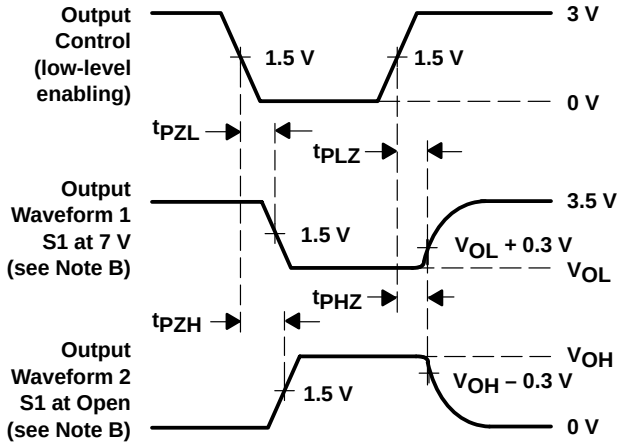

VOLTAGE WAVEFORMS
ENABLE AND DISABLE TIMES

NOTES: A. C_L includes probe and jig capacitance.
B. Waveform 1 is for an output with internal conditions such that the output is low except when disabled by the output control. Waveform 2 is for an output with internal conditions such that the output is high except when disabled by the output control.
C. All input pulses are supplied by generators having the following characteristics: PRR ≤ 10 MHz, Z_O = 50 Ω, t_r ≤ 2.5 ns, t_f ≤ 2.5 ns.
D. The output is measured with one input transition per measurement.
E. t_{PLZ} and t_{PHZ} are the same as t_{dis}.
F. t_{PZL} and t_{PZH} are the same as t_{en}.
G. t_{PLH} and t_{PHL} are the same as t_{pd}.

Figure 1. Load Circuit and Voltage Waveforms

PRODUCT PREVIEW

- **5-Ω Switch Connection Between Two Ports**
- **TTL-Compatible Control Input Levels**
- **Packaged in Plastic Small-Outline Transistor (DBV, DCK) Packages**

DBV OR DCK PACKAGE
(TOP VIEW)

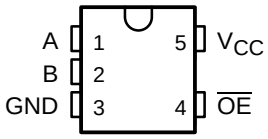

description

The SN74CBTD1G384 features a single high-speed line switch. The switch is disabled when the output-enable ($\overline{OE}$) input is high. A diode to V_{CC} is integrated on the chip to allow for level shifting between 5-V inputs and 3.3-V outputs.

The SN74CBTD1G384 is characterized for operation from –40°C to 85°C.

FUNCTION TABLE

INPUT $\overline{OE}$	FUNCTION
L	A port = B port
H	Disconnect

logic diagram (positive logic)

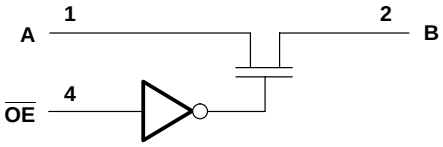

PRODUCT PREVIEW

PRODUCT PREVIEW information concerns products in the formative or design phase of development. Characteristic data and other specifications are design goals. Texas Instruments reserves the right to change or discontinue these products without notice.

Copyright © 1998, Texas Instruments Incorporated

PRODUCT PREVIEW

absolute maximum ratings over operating free-air temperature range (unless otherwise noted)†

Supply voltage range, V_{CC} . . . . . –0.5 V to 7 V
Input voltage range, V_I (see Note 1) . . . . . –0.5 V to 7 V
Continuous channel current . . . . . 128 mA
Input clamp current, I_{IK} ($V_{I/O}$ < 0) . . . . . –50 mA
Package thermal impedance, θ_{JA} (see Note 2): DBV package . . . . . 347°C/W
DCK package . . . . . 389°C/W
Storage temperature range, T_{stg} . . . . . –65°C to 150°C

† Stresses beyond those listed under "absolute maximum ratings" may cause permanent damage to the device. These are stress ratings only, and functional operation of the device at these or any other conditions beyond those indicated under "recommended operating conditions" is not implied. Exposure to absolute-maximum-rated conditions for extended periods may affect device reliability.

NOTES: 1. The input and output negative-voltage ratings may be exceeded if the input and output clamp-current ratings are observed.
2. The package thermal impedance is calculated in accordance with JESD 51.

recommended operating conditions (see Note 3)

		MIN	MAX	UNIT
V_{CC}	Supply voltage	4.5	5.5	V
V_{IH}	High-level control input voltage	2		V
V_{IL}	Low-level control input voltage		0.8	V
T_A	Operating free-air temperature	–40	85	°C

NOTE 3: All unused control inputs of the device must be held at V_{CC} or GND to ensure proper device operation. Refer to the TI application report, *Implications of Slow or Floating CMOS Inputs*, literature number SCBA004.

electrical characteristics over recommended operating free-air temperature range (unless otherwise noted)

PARAMETER		TEST CONDITIONS			MIN	TYP‡	MAX	UNIT
V_{IK}		V_{CC} = 4.5 V,	I_I = –18 mA				–1.2	V
V_{OH}		See Figure 2						
I_I		V_{CC} = 5.5 V,	V_I = 5.5 V or GND				±1	µA
I_{CC}		V_{CC} = 5.5 V,	I_O = 0,	V_I = V_{CC} or GND			1	µA
C_i	Control input	V_I = 3 V or 0						pF
$C_{io(OFF)}$		V_O = 3 V or 0,	$\overline{OE}$ = V_{CC}					pF
r_{on}§		V_{CC} = 4.5 V	V_I = 0	I_I = 64 mA				Ω
				I_I = 30 mA				
			V_I = 2.4 V,	I_I = 15 mA				

‡ All typical values are at V_{CC} = 5 V, T_A = 25°C.
§ Measured by the voltage drop between the A and the B terminals at the indicated current through the switch. On-state resistance is determined by the lower of the voltages of the two (A or B) terminals.

switching characteristics over recommended operating free-air temperature range, C_L = 50 pF (unless otherwise noted) (see Figure 1)

PARAMETER	FROM (INPUT)	TO (OUTPUT)	MIN	MAX	UNIT
t_{pd}¶	A or B	B or A			ns
t_{en}	$\overline{OE}$	A or B			ns
t_{dis}	$\overline{OE}$	A or B			ns

¶ The propagation delay is the calculated RC time constant of the typical on-state resistance of the switch and the specified load capacitance, when driven by an ideal voltage source (zero output impedance).

PARAMETER MEASUREMENT INFORMATION

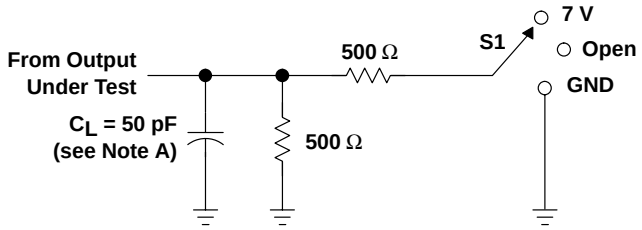

LOAD CIRCUIT

TEST	S1
t_{pd}	Open
t_{PLZ}/t_{PZL}	7 V
t_{PHZ}/t_{PZH}	Open

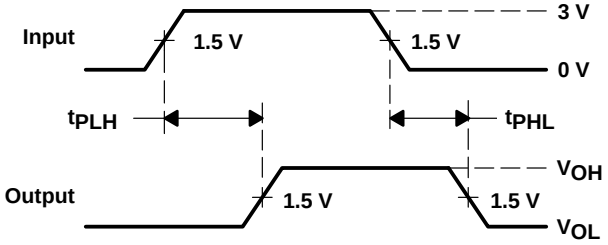

VOLTAGE WAVEFORMS
PROPAGATION DELAY TIMES

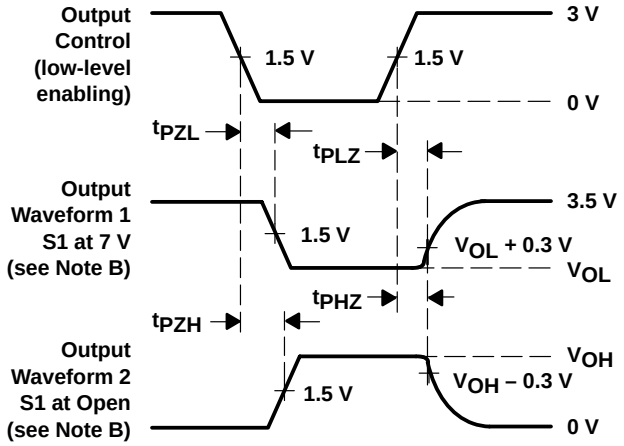

VOLTAGE WAVEFORMS
ENABLE AND DISABLE TIMES

NOTES: A. C_L includes probe and jig capacitance.
B. Waveform 1 is for an output with internal conditions such that the output is low except when disabled by the output control. Waveform 2 is for an output with internal conditions such that the output is high except when disabled by the output control.
C. All input pulses are supplied by generators having the following characteristics: PRR ≤ 10 MHz, Z_O = 50 Ω, t_r ≤ 2.5 ns, t_f ≤ 2.5 ns.
D. The output is measured with one input transition per measurement.
E. t_{PLZ} and t_{PHZ} are the same as t_{dis}.
F. t_{PZL} and t_{PZH} are the same as t_{en}.
G. t_{PLH} and t_{PHL} are the same as t_{pd}.

Figure 1. Load Circuit and Voltage Waveforms

PRODUCT PREVIEW

PRODUCT PREVIEW

TYPICAL CHARACTERISTICS

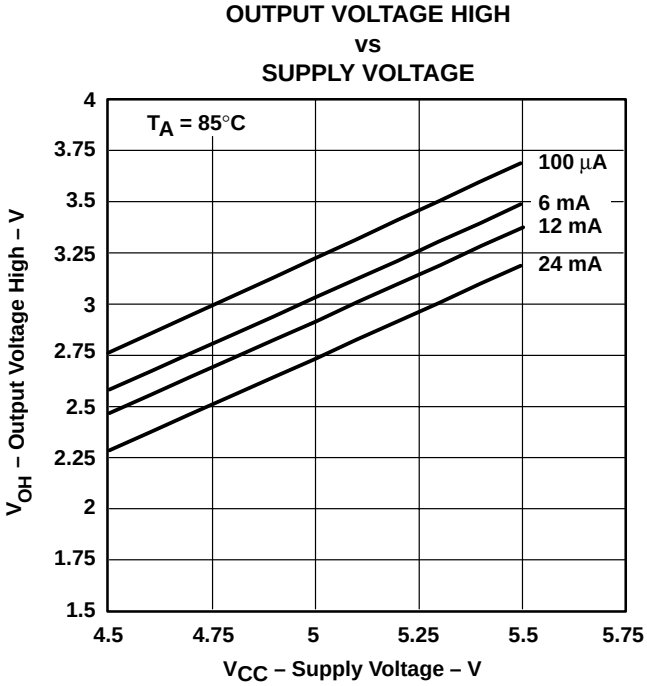

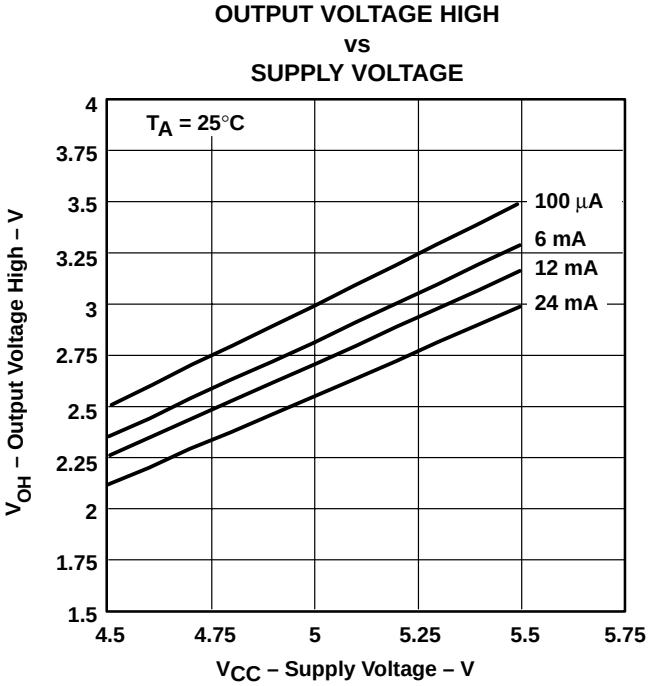

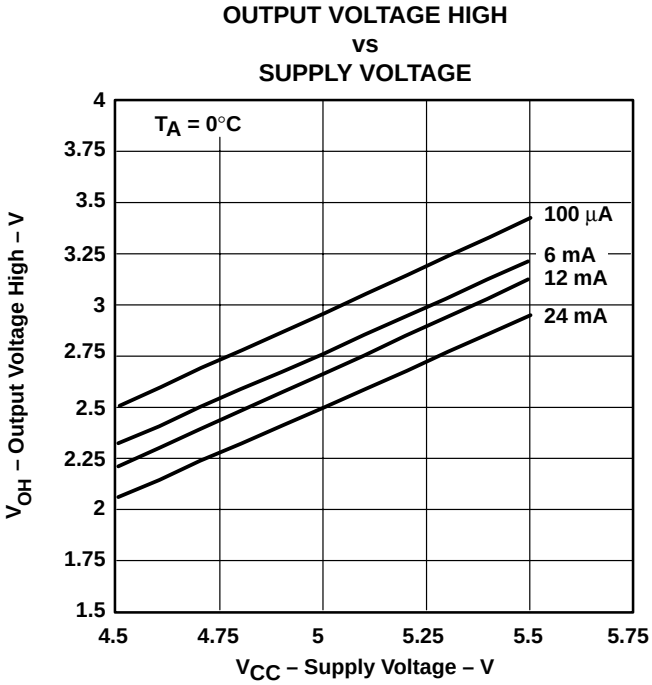

Figure 2. V_{OH} Values

- **5-Ω Switch Connection Between Two Ports**
- **TTL-Compatible Control Input Levels**
- **Packaged in Plastic Small-Outline Transistor (DBV, DCK) Packages**

DBV OR DCK PACKAGE
(TOP VIEW)

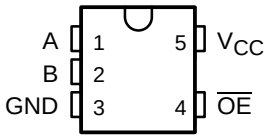

description

The SN74CBTS1G384 features a single high-speed line switch with Schottky diodes on the I/O to clamp undershoot. The switch is disabled when the output-enable ($\overline{OE}$) input is high.

The SN74CBTS1G384 is characterized for operation from –40°C to 85°C.

FUNCTION TABLE

INPUT $\overline{OE}$	FUNCTION
L	A port = B port
H	Disconnect

logic diagram (positive logic)

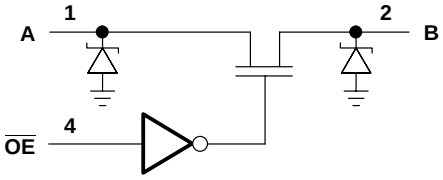

PRODUCT PREVIEW

PRODUCT PREVIEW information concerns products in the formative or design phase of development. Characteristic data and other specifications are design goals. Texas Instruments reserves the right to change or discontinue these products without notice.

Copyright © 1998, Texas Instruments Incorporated

PRODUCT PREVIEW

absolute maximum ratings over operating free-air temperature range (unless otherwise noted)†

Supply voltage range, V_{CC} . . . . . –0.5 V to 7 V
Input voltage range, V_I (see Note 1) . . . . . –0.5 V to 7 V
Continuous channel current . . . . . 128 mA
Input clamp current, I_{IK} ($V_{I/O}$ < 0) . . . . . –50 mA
Package thermal impedance, θ_{JA} (see Note 2): DBV package . . . . . 347°C/W
DCK package . . . . . 389°C/W
Storage temperature range, T_{stg} . . . . . –65°C to 150°C

† Stresses beyond those listed under "absolute maximum ratings" may cause permanent damage to the device. These are stress ratings only, and functional operation of the device at these or any other conditions beyond those indicated under "recommended operating conditions" is not implied. Exposure to absolute-maximum-rated conditions for extended periods may affect device reliability.

NOTES: 1. The input and output negative-voltage ratings may be exceeded if the input and output clamp-current ratings are observed.
2. The package thermal impedance is calculated in accordance with JESD 51.

recommended operating conditions (see Note 3)

		MIN	MAX	UNIT
V_{CC}	Supply voltage	4	5.5	V
V_{IH}	High-level control input voltage	2		V
V_{IL}	Low-level control input voltage		0.8	V
T_A	Operating free-air temperature	–40	85	°C

NOTE 3: All unused control inputs of the device must be held at V_{CC} or GND to ensure proper device operation. Refer to the TI application report, *Implications of Slow or Floating CMOS Inputs*, literature number SCBA004.

electrical characteristics over recommended operating free-air temperature range (unless otherwise noted)

PARAMETER		TEST CONDITIONS			MIN	TYP‡	MAX	UNIT
V_{IK}		V_{CC} = 4.5 V,	I_I = –18 mA				–0.7	V
I_I	I_{IL}	V_{CC} = 5.5 V	V_I = GND				–1	µA
	I_{IH}		V_I = 5.5 V				50	µA
I_{CC}		V_{CC} = 5.5 V,	I_O = 0,	V_I = V_{CC} or GND			3	µA
C_i	Control input	V_I = 3 V or 0						pF
$C_{io(OFF)}$		V_O = 3 V or 0,	$\overline{OE}$ = V_{CC}					pF
r_{on}§		V_{CC} = 4 V,	TYP at V_{CC} = 4 V,	V_I = 2.4 V, I_I = 15 mA				Ω
		V_{CC} = 4.5 V	V_I = 0	I_I = 64 mA				Ω
				I_I = 30 mA				Ω
			V_I = 2.4 V,	I_I = 15 mA				Ω

‡ All typical values are at V_{CC} = 5 V (unless otherwise noted), T_A = 25°C.
§ Measured by the voltage drop between the A and the B terminals at the indicated current through the switch. On-state resistance is determined by the lower of the voltages of the two (A or B) terminals.

switching characteristics over recommended operating free-air temperature range, C_L = 50 pF (unless otherwise noted) (see Figure 1)

PARAMETER	FROM (INPUT)	TO (OUTPUT)	V_{CC} = 4 V		V_{CC} = 5 V ± 0.5 V		UNIT
			MIN	MAX	MIN	MAX	
t_{pd}†	A or B	B or A					ns
t_{en}	$\overline{OE}$	A or B					ns
t_{dis}	$\overline{OE}$	A or B					ns

† The propagation delay is the calculated RC time constant of the typical on-state resistance of the switch and the specified load capacitance, when driven by an ideal voltage source (zero output impedance).

PARAMETER MEASUREMENT INFORMATION

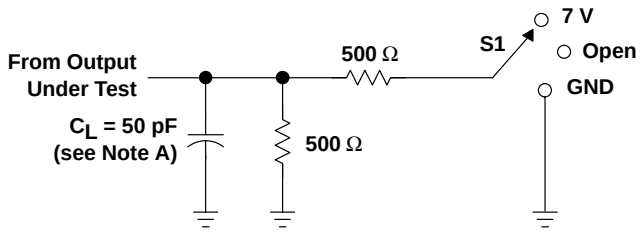

LOAD CIRCUIT

TEST	S1
t_{pd}	Open
t_{PLZ}/t_{PZL}	7 V
t_{PHZ}/t_{PZH}	Open

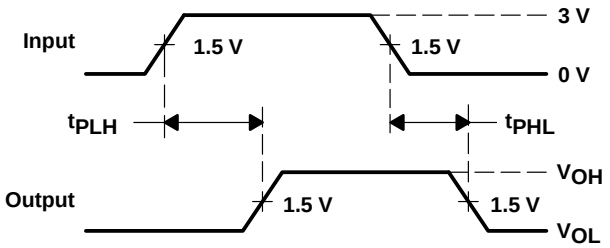

VOLTAGE WAVEFORMS
PROPAGATION DELAY TIMES

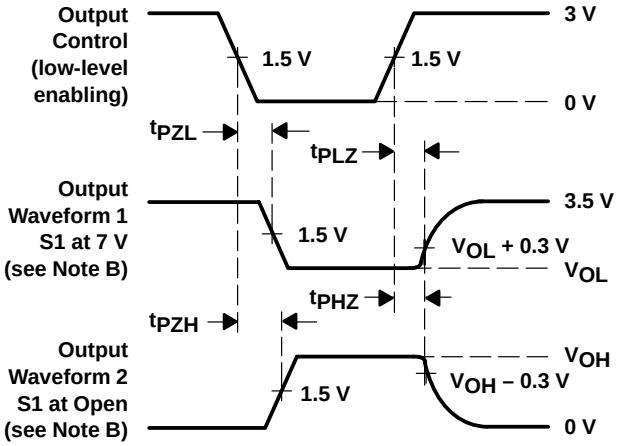

VOLTAGE WAVEFORMS
ENABLE AND DISABLE TIMES

NOTES: A. C_L includes probe and jig capacitance.
B. Waveform 1 is for an output with internal conditions such that the output is low except when disabled by the output control. Waveform 2 is for an output with internal conditions such that the output is high except when disabled by the output control.
C. All input pulses are supplied by generators having the following characteristics: PRR ≤ 10 MHz, Z_O = 50 Ω, t_r ≤ 2.5 ns, t_f ≤ 2.5 ns.
D. The output is measured with one input transition per measurement.
E. t_{PLZ} and t_{PHZ} are the same as t_{dis}.
F. t_{PZL} and t_{PZH} are the same as t_{en}.
G. t_{PLH} and t_{PHL} are the same as t_{pd}.

Figure 1. Load Circuit and Voltage Waveforms

PRODUCT PREVIEW

General Information 1
CBT Single Gates 2
CBT (2 to 10 Bit) 3
CBT Widebus™ 4
CBT With Integrated Diodes 5
CBTLV Single Gates 6
CBTLV (2 to 10 Bit) 7
CBTLV Widebus™ 8
Application Reports 9
Mechanical Data 10

Contents

			Page
	SN74CBT3125	Quadruple FET Bus Switch	3–3
	SN74CBT3126	Quadruple FET Bus Switch	3–7
	SN74CBT3244	Octal FET Bus Switch	3–11
	SN74CBTR3244	Octal FET Bus Switch	3–15
	SN74CBT3245A	Octal FET Bus Switch	3–19
	SN74CBTR3245	Octal FET Bus Switch	3–23
	SN74CBT3251	1-of-8 FET Multiplexer/Demultiplexer	3–27
	SN74CBT3253	Dual 1-of-4 FET Multiplexer/Demultiplexer	3–31
	SN74CBTR3253	Dual 1-of-4 FET Multiplexer/Demultiplexer	3–35
	SN74CBT3257	4-Bit 1-of-2 FET Multiplexer/Demultiplexer	3–39
	SN74CBT3306	Dual FET Bus Switch	3–43
	SN74CBT3345	8-Bit FET Bus Switch	3–47
SN54CBT3383	SN74CBT3383	10-Bit FET Bus-Exchange Switches	3–51
	SN74CBTH3383	10-Bit FET Bus-Exchange Switch With Bus Hold	3–55
	SN74CBTR3383	10-Bit FET Bus-Exchange Switch	3–59
	SN74CBT3384A	10-Bit FET Bus Switch	3–63
	SN74CBTR3384	10-Bit FET Bus Switch	3–67
	SN74CBT3386	10-Bit FET Bus-Exchange Switch With Extended Voltage Range	3–71
	SN74CBT3390	8-Bit to 16-Bit FET Multiplexer/Demultiplexer Bus Switch	3–75
	SN74CBT3861	10-Bit FET Bus Switch	3–79
	SN74CBT6800	10-Bit FET Bus Switch With Precharged Outputs for Live Insertion	3–83

- **Standard ’125-Type Pinout**
- **5-Ω Switch Connection Between Two Ports**
- **TTL-Compatible Input Levels**
- **Package Options Include Plastic Small-Outline (D), Shrink Small-Outline (DB, DBQ), Thin Very Small-Outline (DGV), and Thin Shrink Small-Outline (PW) Packages**

D, DB, DGV, OR PW PACKAGE
(TOP VIEW)

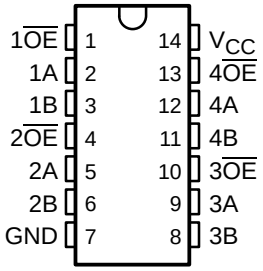

DBQ PACKAGE
(TOP VIEW)

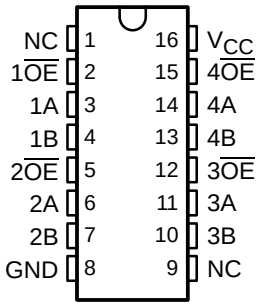

NC – No internal connection

description

The SN74CBT3125 quadruple FET bus switch features independent line switches. Each switch is disabled when the associated output-enable ($\overline{OE}$) input is high.

The SN74CBT3125 is characterized for operation from –40°C to 85°C.

FUNCTION TABLE
(each bus switch)

INPUT $\overline{OE}$	FUNCTION
L	A port = B port
H	Disconnect

logic diagram (positive logic)

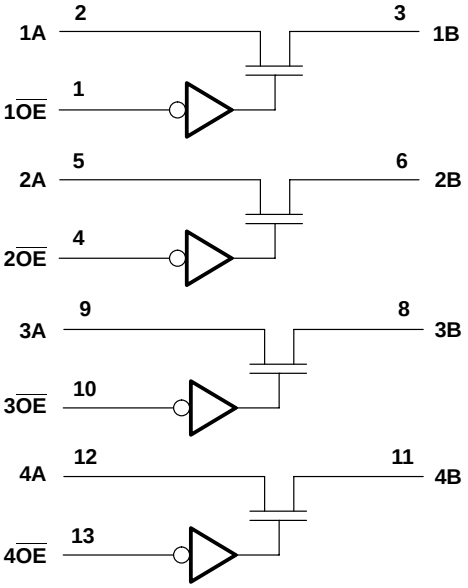

Pin numbers shown are for the D, DB, DGV, and PW packages.

PRODUCTION DATA information is current as of publication date. Products conform to specifications per the terms of Texas Instruments standard warranty. Production processing does not necessarily include testing of all parameters.

Copyright © 1998, Texas Instruments Incorporated

absolute maximum ratings over operating free-air temperature range (unless otherwise noted)†

Supply voltage range, V_{CC} . . . . . –0.5 V to 7 V
Input voltage range, V_I (see Note 1) . . . . . –0.5 V to 7 V
Continuous channel current . . . . . 128 mA
Input clamp current, I_K ($V_{I/O} < 0$) . . . . . –50 mA
Package thermal impedance, θ_{JA} (see Note 2): D package . . . . . 127°C/W
DB package . . . . . 158°C/W
DBQ package . . . . . 139°C/W
DGV package . . . . . 182°C/W
PW package . . . . . 170°C/W
Storage temperature range, T_{stg} . . . . . –65°C to 150°C

† Stresses beyond those listed under "absolute maximum ratings" may cause permanent damage to the device. These are stress ratings only, and functional operation of the device at these or any other conditions beyond those indicated under "recommended operating conditions" is not implied. Exposure to absolute-maximum-rated conditions for extended periods may affect device reliability.

NOTES: 1. The input and output negative-voltage ratings may be exceeded if the input and output clamp-current ratings are observed.
2. The package thermal impedance is calculated in accordance with JESD 51.

recommended operating conditions (see Note 3)

		MIN	MAX	UNIT
V_{CC}	Supply voltage	4	5.5	V
V_{IH}	High-level control input voltage	2		V
V_{IL}	Low-level control input voltage		0.8	V
T_A	Operating free-air temperature	–40	85	°C

NOTE 3: All unused control inputs of the device must be held at V_{CC} or GND to ensure proper device operation. Refer to the TI application report, *Implications of Slow or Floating CMOS Inputs*, literature number SCBA004.

electrical characteristics over recommended operating free-air temperature range (unless otherwise noted)

PARAMETER		TEST CONDITIONS			MIN	TYP‡	MAX	UNIT
V_{IK}		V_{CC} = 4 V,	I_I = –18 mA				–1.2	V
I_I		V_{CC} = 5.5 V,	V_I = 5.5 V or GND				±1	µA
I_{CC}		V_{CC} = 5.5 V,	I_O = 0,	V_I = V_{CC} or GND			3	µA
ΔI_{CC}§	Control inputs	V_{CC} = 5.5 V,	One input at 3.4 V,	Other inputs at V_{CC} or GND			2.5	mA
C_i	Control inputs	V_I = 3 V or 0				3		pF
$C_{io(OFF)}$		V_O = 3 V or 0,	$\overline{OE}$ = V_{CC}			4		pF
r_{on}¶		V_{CC} = 4 V, TYP at V_{CC} = 4 V	V_I = 2.4 V,	I_I = 15 mA		16	22	Ω
		V_{CC} = 4.5 V	V_I = 0	I_I = 64 mA		5	7	
				I_I = 30 mA		5	7	
			V_I = 2.4 V,	I_I = 15 mA		10	15	

‡ All typical values are at V_{CC} = 5 V (unless otherwise noted), T_A = 25°C.
§ This is the increase in supply current for each input that is at the specified TTL voltage level rather than V_{CC} or GND.
¶ Measured by the voltage drop between the A and the B terminals at the indicated current through the switch. On-state resistance is determined by the lower voltage of the two (A or B) terminals.

switching characteristics over recommended operating free-air temperature range, C_L = 50 pF (unless otherwise noted) (see Figure 1)

PARAMETER	FROM (INPUT)	TO (OUTPUT)	V_{CC} = 4 V		V_{CC} = 5 V ± 0.5 V		UNIT
			MIN	MAX	MIN	MAX	
t_{pd}†	A or B	B or A		0.35		0.25	ns
t_{en}	$\overline{OE}$	A or B		6	1.6	5.4	ns
t_{dis}	$\overline{OE}$	A or B		5.1	1	4.7	ns

† The propagation delay is the calculated RC time constant of the typical on-state resistance of the switch and the specified load capacitance, when driven by an ideal voltage source (zero output impedance).

PARAMETER MEASUREMENT INFORMATION

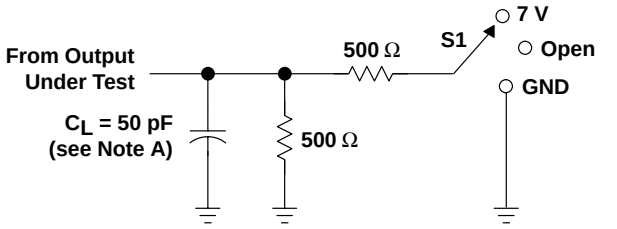

LOAD CIRCUIT

TEST	S1
t_{pd}	Open
t_{PLZ}/t_{PZL}	7 V
t_{PHZ}/t_{PZH}	Open

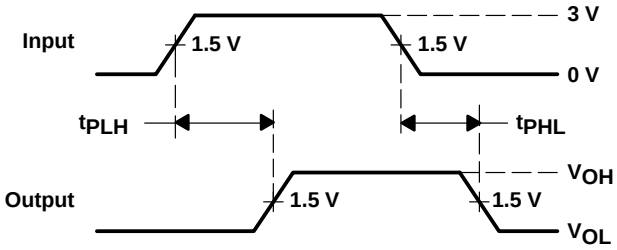

VOLTAGE WAVEFORMS
PROPAGATION DELAY TIMES

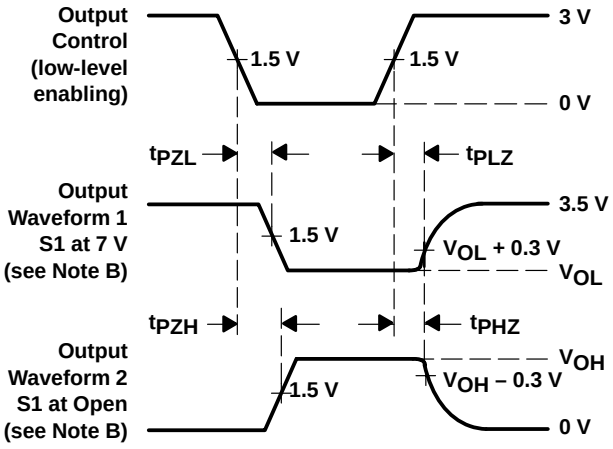

VOLTAGE WAVEFORMS
ENABLE AND DISABLE TIMES

NOTES: A. C_L includes probe and jig capacitance.
B. Waveform 1 is for an output with internal conditions such that the output is low except when disabled by the output control. Waveform 2 is for an output with internal conditions such that the output is high except when disabled by the output control.
C. All input pulses are supplied by generators having the following characteristics: PRR ≤ 10 MHz, Z_O = 50 Ω, t_r ≤ 2.5 ns, t_f ≤ 2.5 ns.
D. The outputs are measured one at a time with one transition per measurement.
E. t_{PLZ} and t_{PHZ} are the same as t_{dis}.
F. t_{PZL} and t_{PZH} are the same as t_{en}.
G. t_{PLH} and t_{PHL} are the same as t_{pd}.

Figure 1. Load Circuit and Voltage Waveforms

- **Standard ’126-Type Pinout (D, DGV, and PW Packages)**
- **5-Ω Switch Connection Between Two Ports**
- **TTL-Compatible Input Levels**
- **Latch-Up Performance Exceeds 250 mA Per JESD 17**
- **Package Options Include Plastic Small-Outline (D), Shrink Small-Outline (DBQ), Thin Very Small-Outline (DGV), and Thin Shrink Small-Outline (PW) Packages**

D, DGV, OR PW PACKAGE
(TOP VIEW)

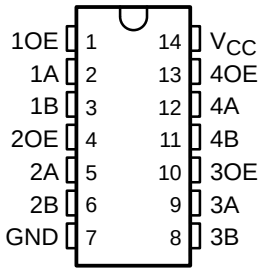

DBQ PACKAGE
(TOP VIEW)

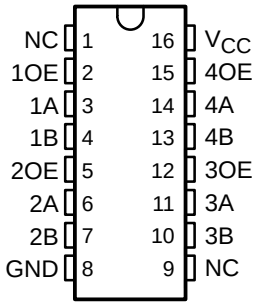

NC – No internal connection

description

The SN74CBT3126 quadruple FET bus switch features independent line switches. Each switch is disabled when the associated output-enable (OE) input is low.

The SN74CBT3126 is characterized for operation from –40°C to 85°C.

FUNCTION TABLE
(each bus switch)

INPUT OE	FUNCTION
L	Disconnect
H	A = B

logic diagram (positive logic)

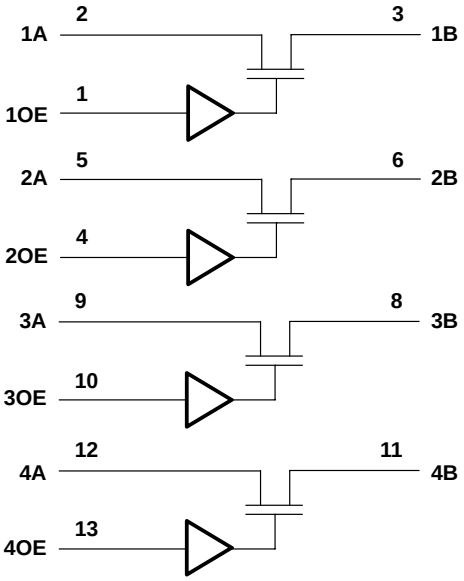

Pin numbers shown are for the D, DGV, and PW packages.

PRODUCTION DATA information is current as of publication date. Products conform to specifications per the terms of Texas Instruments standard warranty. Production processing does not necessarily include testing of all parameters.

Copyright © 1998, Texas Instruments Incorporated

absolute maximum ratings over operating free-air temperature range (unless otherwise noted)†

Supply voltage range, V_{CC} . . . . . –0.5 V to 7 V
Input voltage range, V_I (see Note 1) . . . . . –0.5 V to 7 V
Continuous channel current . . . . . 128 mA
Input clamp current, I_K ($V_{I/O} < 0$) . . . . . –50 mA
Package thermal impedance, θ_{JA} (see Note 2): D package . . . . . 127°C/W
DBQ package . . . . . 139°C/W
DGV package . . . . . 182°C/W
PW package . . . . . 170°C/W
Storage temperature range, T_{stg} . . . . . –65°C to 150°C

† Stresses beyond those listed under "absolute maximum ratings" may cause permanent damage to the device. These are stress ratings only, and functional operation of the device at these or any other conditions beyond those indicated under "recommended operating conditions" is not implied. Exposure to absolute-maximum-rated conditions for extended periods may affect device reliability.

NOTES: 1. The input and output negative-voltage ratings may be exceeded if the input and output clamp-current ratings are observed.
2. The package thermal impedance is calculated in accordance with JESD 51.

recommended operating conditions (see Note 3)

		MIN	MAX	UNIT
V_{CC}	Supply voltage	4	5.5	V
V_{IH}	High-level control input voltage	2		V
V_{IL}	Low-level control input voltage		0.8	V
T_A	Operating free-air temperature	–40	85	°C

NOTE 3: All unused control inputs of the device must be held at V_{CC} or GND to ensure proper device operation. Refer to the TI application report, *Implications of Slow or Floating CMOS Inputs*, literature number SCBA004.

electrical characteristics over recommended operating free-air temperature range (unless otherwise noted)

PARAMETER		TEST CONDITIONS				MIN	TYP‡	MAX	UNIT
V_{IK}		V_{CC} = 4 V,	I_I = –18 mA					–1.2	V
I_I		V_{CC} = 5.5 V,	V_I = 5.5 V or GND					±1	µA
I_{CC}		V_{CC} = 5.5 V,	I_O = 0,	V_I = V_{CC} or GND				3	µA
ΔI_{CC}§	Control inputs	V_{CC} = 5.5 V,	One input at 3.4 V,	Other inputs at V_{CC} or GND				2.5	mA
C_i	Control inputs	V_I = 3 V or 0					3		pF
$C_{io(OFF)}$		V_O = 3 V or 0,	OE = GND				4		pF
r_{on}¶		V_{CC} = 4 V,	TYP at V_{CC} = 4 V,	V_I = 2.4 V,	I_I = 15 mA		16	22	Ω
		V_{CC} = 4.5 V	V_I = 0	I_I = 64 mA			5	7	Ω
				I_I = 30 mA			5	7	Ω
			V_I = 2.4 V,	I_I = 15 mA			10	15	Ω

‡ All typical values are at V_{CC} = 5 V (unless otherwise noted), T_A = 25°C.
§ This is the increase in supply current for each input that is at the specified TTL voltage level rather than V_{CC} or GND.
¶ Measured by the voltage drop between the A and the B terminals at the indicated current through the switch. On-state resistance is determined by the lower of the voltages of the two (A or B) terminals.

switching characteristics over recommended operating free-air temperature range, C_L = 50 pF (unless otherwise noted) (see Figure 1)

PARAMETER	FROM (INPUT)	TO (OUTPUT)	V_{CC} = 4 V		V_{CC} = 5 V ± 0.5 V		UNIT
			MIN	MAX	MIN	MAX	
t_{pd}†	A or B	B or A		0.35		0.25	ns
t_{en}	OE	A or B		5.4	1.6	5.1	ns
t_{dis}	OE	A or B		5	1	4.5	ns

† The propagation delay is the calculated RC time constant of the typical on-state resistance of the switch and the specified load capacitance, when driven by an ideal voltage source (zero output impedance).

PARAMETER MEASUREMENT INFORMATION

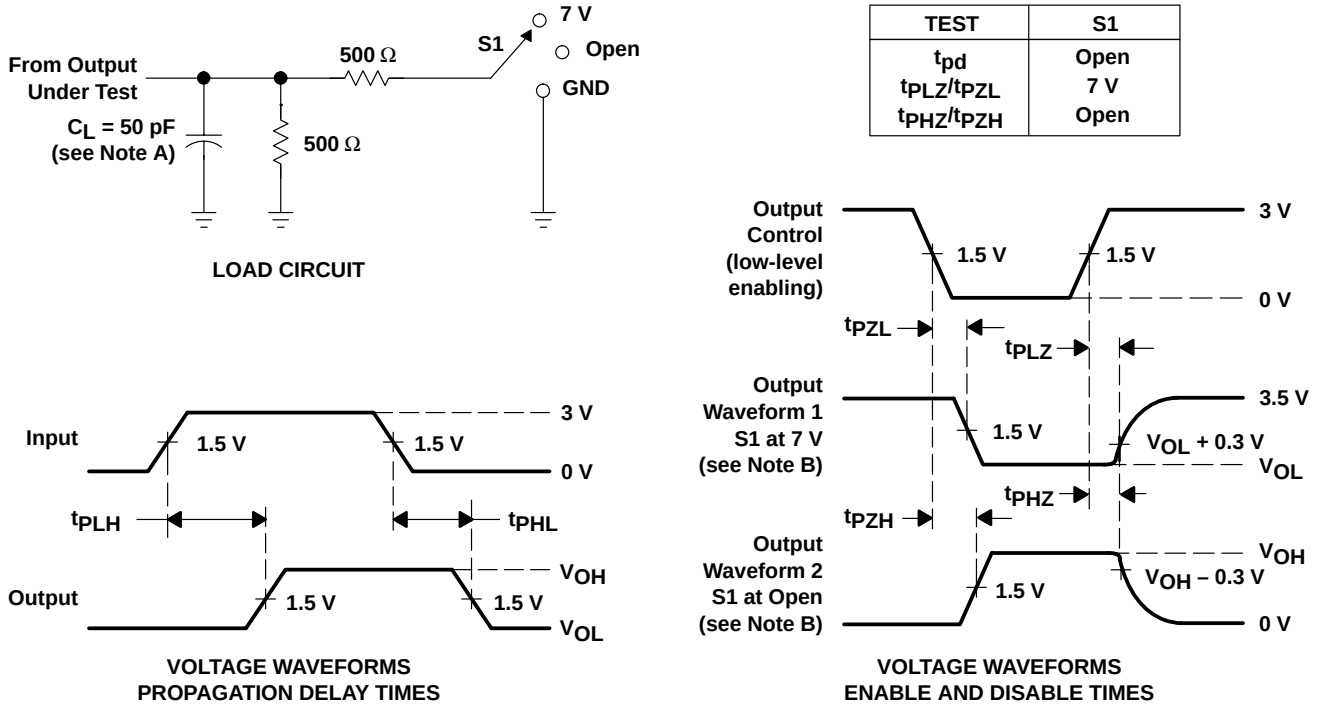

NOTES:
A. C_L includes probe and jig capacitance.
B. Waveform 1 is for an output with internal conditions such that the output is low except when disabled by the output control. Waveform 2 is for an output with internal conditions such that the output is high except when disabled by the output control.
C. All input pulses are supplied by generators having the following characteristics: PRR ≤ 10 MHz, Z_O = 50 Ω, t_r ≤ 2.5 ns, t_f ≤ 2.5 ns.
D. The outputs are measured one at a time with one transition per measurement.
E. t_{PLZ} and t_{PHZ} are the same as t_{dis}.
F. t_{PZL} and t_{PZH} are the same as t_{en}.
G. t_{PLH} andt_{PHL} are the same as t_{pd}.

Figure 1. Load Circuit and Voltage Waveforms

- **Functionally Equivalent to QS3244**
- **Standard ’244-Type Pinout**
- **5-Ω Switch Connection Between Two Ports**
- **TTL-Compatible Input Levels**
- **Package Options Include Plastic Small-Outline (DW), Shrink Small-Outline (DB, DBQ), Thin Very Small-Outline (DGV), and Thin Shrink Small-Outline (PW) Packages**

DB, DBQ, DGV, DW, OR PW PACKAGE
(TOP VIEW)

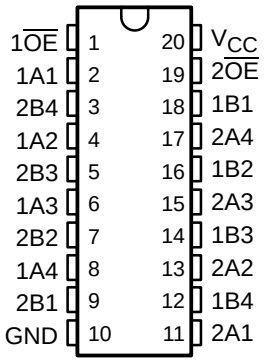

description

The SN74CBT3244 provides eight bits of high-speed TTL-compatible bus switching in a standard ’244 device pinout. The low on-state resistance of the switch allows connections to be made with minimal propagation delay.

The device is organized as two 4-bit low-impedance switches with separate output-enable ($\overline{OE}$) inputs. When $\overline{OE}$ is low, the switch is on and data can flow from port A to port B, or vice versa. When $\overline{OE}$ is high, the switch is open and a high-impedance state exists between the two ports.

The SN74CBT3244 is characterized for operation from 0°C to 70 °C.

FUNCTION TABLE
(each 4-bit bus switch)

INPUT $\overline{OE}$	FUNCTION
L	A port = B port
H	Disconnect

logic diagram (positive logic)

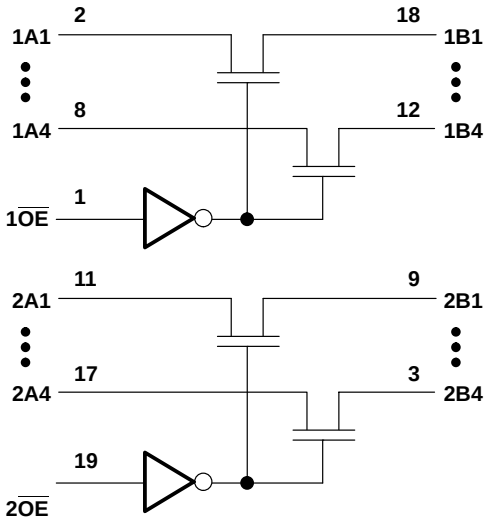

PRODUCTION DATA information is current as of publication date. Products conform to specifications per the terms of Texas Instruments standard warranty. Production processing does not necessarily include testing of all parameters.

Copyright © 1998, Texas Instruments Incorporated

absolute maximum ratings over operating free-air temperature range (unless otherwise noted)†

Supply voltage range, V_{CC} . . . . . –0.5 V to 7 V
Input voltage range, V_I (see Note 1) . . . . . –0.5 V to 7 V
Continuous channel current . . . . . 128 mA
Clamp current, I_K ($V_{I/O} < 0$) . . . . . –50 mA
Package thermal impedance, θ_{JA} (see Note 2): DB package . . . . . 115°C/W
DBQ package . . . . . 118°C/W
DGV package . . . . . 146°C/W
DW package . . . . . 97°C/W
PW package . . . . . 128°C/W
Storage temperature range, T_{stg} . . . . . –65°C to 150°C

† Stresses beyond those listed under "absolute maximum ratings" may cause permanent damage to the device. These are stress ratings only, and functional operation of the device at these or any other conditions beyond those indicated under "recommended operating conditions" is not implied. Exposure to absolute-maximum-rated conditions for extended periods may affect device reliability.

NOTES: 1. The input and output negative-voltage ratings may be exceeded if the input and output clamp-current ratings are observed.
2. The package thermal impedance is calculated in accordance with JESD 51.

recommended operating conditions (see Note 3)

		MIN	MAX	UNIT
V_{CC}	Supply voltage	4.5	5.5	V
V_{IH}	High-level control input voltage	2		V
V_{IL}	Low-level control input voltage		0.8	V
T_A	Operating free-air temperature	0	70	°C

NOTE 3: All unused control inputs of the device must be held at V_{CC} or GND to ensure proper device operation. Refer to the TI application report, *Implications of Slow or Floating CMOS Inputs*, literature number SCBA004.

electrical characteristics over recommended operating free-air temperature range (unless otherwise noted)

PARAMETER		TEST CONDITIONS			MIN	TYP‡	MAX	UNIT
V_{IK}		V_{CC} = 4.5 V,	I_I = –18 mA				–1.2	V
I_I		V_{CC} = 5.5 V,	V_I = 5.5 V or GND				±5	µA
I_{CC}		V_{CC} = 5.5 V,	I_O = 0,	$V_I = V_{CC}$ or GND			50	µA
ΔI_{CC}§	Control inputs	V_{CC} = 5.5 V,	One input at 3.4 V,	Other inputs at V_{CC} or GND			3.5	mA
C_i	Control inputs	V_I = 3 V or 0				3		pF
$C_{io(OFF)}$		V_O = 3 V or 0,	$\overline{OE} = V_{CC}$			6		pF
r_{on}¶		V_{CC} = 4.5 V	V_I = 0	I_I = 64 mA		5	7	Ω
				I_I = 30 mA		5	7	
			V_I = 2.4 V,	I_I = 15 mA		10	15	

‡ All typical values are at V_{CC} = 5 V, T_A = 25°C.
§ This is the increase in supply current for each input that is at the specified TTL voltage level rather than V_{CC} or GND.
¶ Measured by the voltage drop between the A and the B terminals at the indicated current through the switch. On-state resistance is determined by the lowest voltage of the two (A or B) terminals.

switching characteristics over recommended operating free-air temperature range, C_L = 50 pF (unless otherwise noted) (see Figure 1)

PARAMETER	FROM (INPUT)	TO (OUTPUT)	MIN	MAX	UNIT
t_{pd}†	A or B	B or A		0.25	ns
t_{en}	$\overline{OE}$	A or B	1	8.9	ns
t_{dis}	$\overline{OE}$	A or B	1	7.4	ns

† This propagation delay is the calculated RC time constant of the typical on-state resistance of the switch and the specified load capacitance, when driven by an ideal voltage source (zero output impedance).

PARAMETER MEASUREMENT INFORMATION

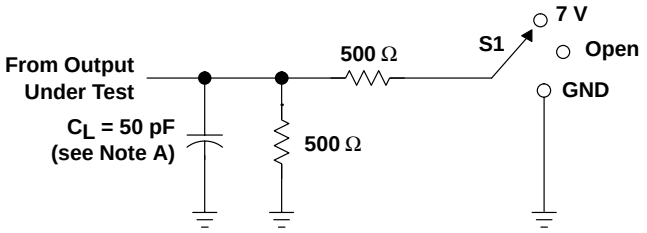

LOAD CIRCUIT

TEST	S1
t_{pd}	Open
t_{PLZ}/t_{PZL}	7 V
t_{PHZ}/t_{PZH}	Open

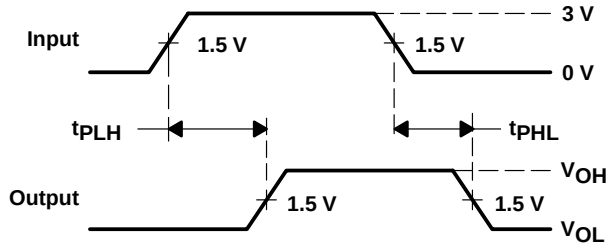

VOLTAGE WAVEFORMS
PROPAGATION DELAY TIMES

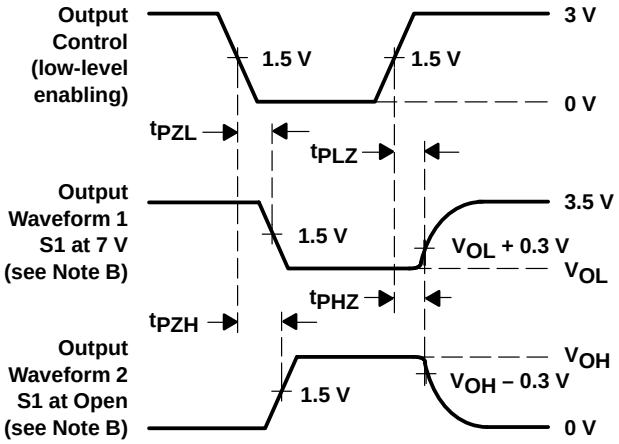

VOLTAGE WAVEFORMS
ENABLE AND DISABLE TIMES

NOTES: A. C_L includes probe and jig capacitance.
B. Waveform 1 is for an output with internal conditions such that the output is low except when disabled by the output control. Waveform 2 is for an output with internal conditions such that the output is high except when disabled by the output control.
C. All input pulses are supplied by generators having the following characteristics: PRR ≤ 10 MHz, Z_O = 50 Ω, t_r ≤ 2.5 ns, t_f ≤ 2.5 ns.
D. The outputs are measured one at a time with one transition per measurement.
E. t_{PLZ} and t_{PHZ} are the same as t_{dis}.
F. t_{PZL} and t_{PZH} are the same as t_{en}.
G. t_{PLH} andt_{PHL} are the same as t_{pd}.

Figure 1. Load Circuit and Voltage Waveforms

- **Functionally Equivalent to QS3244**
- **Standard ’244-Type Pinout**
- **25-Ω Switch Connection Between Two Ports**
- **TTL-Compatible Input Levels**
- **Package Options Include Plastic Small-Outline (DW), Shrink Small-Outline (DB, DBQ), Thin Very Small-Outline (DGV), and Thin Shrink Small-Outline (PW) Packages**

DB, DBQ, DGV, DW, OR PW PACKAGE
(TOP VIEW)

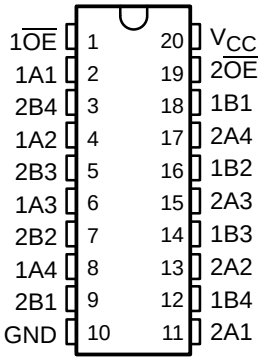

description

The SN74CBTR3244 provides eight bits of high-speed TTL-compatible bus switching in a standard ’244 device pinout. The low on-state resistance of the switch allows connections to be made with minimal propagation delay.

The device is organized as two 4-bit low-impedance switches with separate output-enable ($\overline{OE}$) inputs. When $\overline{OE}$ is low, the switch is on and data can flow from port A to port B, or vice versa. When $\overline{OE}$ is high, the switch is open and a high-impedance state exists between the two ports.

The device has equivalent 25-Ω series resistors to reduce signal-reflection noise. This eliminates the need for external terminating resistors.

The SN74CBTR3244 is characterized for operation from 0°C to 70 °C.

FUNCTION TABLE
(each 4-bit bus switch)

INPUT $\overline{OE}$	FUNCTION
L	A port = B port
H	Disconnect

PRODUCT PREVIEW

PRODUCT PREVIEW information concerns products in the formative or design phase of development. Characteristic data and other specifications are design goals. Texas Instruments reserves the right to change or discontinue these products without notice.

Copyright © 1998, Texas Instruments Incorporated

PRODUCT PREVIEW

logic diagram (positive logic)

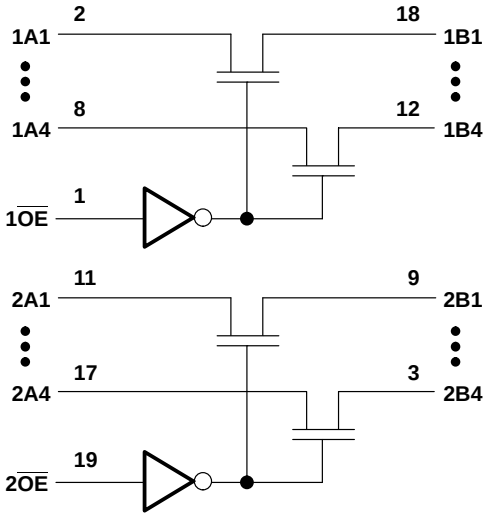

absolute maximum ratings over operating free-air temperature range (unless otherwise noted)†

Supply voltage range, V_{CC} . . . . . –0.5 V to 7 V
Input voltage range, V_I (see Note 1) . . . . . –0.5 V to 7 V
Continuous channel current . . . . . 128 mA
Clamp current, I_K ($V_{I/O} < 0$) . . . . . –50 mA
Package thermal impedance, θ_{JA} (see Note 2): DB package . . . . . 115°C/W
DBQ package . . . . . 118°C/W
DGV package . . . . . 146°C/W
DW package . . . . . 97°C/W
PW package . . . . . 128°C/W
Storage temperature range, T_{stg} . . . . . –65°C to 150°C

† Stresses beyond those listed under “absolute maximum ratings” may cause permanent damage to the device. These are stress ratings only, and functional operation of the device at these or any other conditions beyond those indicated under “recommended operating conditions” is not implied. Exposure to absolute-maximum-rated conditions for extended periods may affect device reliability.

NOTES: 1. The input and output negative-voltage ratings may be exceeded if the input and output clamp-current ratings are observed.
2. The package thermal impedance is calculated in accordance with JESD 51.

recommended operating conditions (see Note 3)

		MIN	MAX	UNIT
V_{CC}	Supply voltage	4.5	5.5	V
V_{IH}	High-level control input voltage	2		V
V_{IL}	Low-level control input voltage		0.8	V
T_A	Operating free-air temperature	0	70	°C

NOTE 3: All unused control inputs of the device must be held at V_{CC} or GND to ensure proper device operation. Refer to the TI application report, *Implications of Slow or Floating CMOS Inputs*, literature number SCBA004.

electrical characteristics over recommended operating free-air temperature range (unless otherwise noted)

PARAMETER		TEST CONDITIONS			MIN	TYP†	MAX	UNIT
V_{IK}		V_{CC} = 4.5 V,	I_I = –18 mA				–1.2	V
I_I		V_{CC} = 5.5 V,	V_I = 5.5 V or GND				±5	µA
I_{CC}		V_{CC} = 5.5 V,	I_O = 0,	V_I = V_{CC} or GND			50	µA
ΔI_{CC}‡	Control inputs	V_{CC} = 5.5 V,	One input at 3.4 V,	Other inputs at V_{CC} or GND			3.5	mA
C_i	Control inputs	V_I = 3 V or 0						pF
$C_{io(OFF)}$		V_O = 3 V or 0,	$\overline{OE}$ = V_{CC}					pF
r_{on}§		V_{CC} = 4.5 V	V_I = 0	I_I = 64 mA				Ω
				I_I = 30 mA				
			V_I = 2.4 V,	I_I = 15 mA				

† All typical values are at V_{CC} = 5 V, T_A = 25°C.
‡ This is the increase in supply current for each input that is at the specified TTL voltage level rather than V_{CC} or GND.
§ Measured by the voltage drop between the A and the B terminals at the indicated current through the switch. On-state resistance is determined by the lowest voltage of the two (A or B) terminals.

switching characteristics over recommended operating free-air temperature range, C_L = 50 pF (unless otherwise noted) (see Figure 1)

PARAMETER	FROM (INPUT)	TO (OUTPUT)	MIN	MAX	UNIT
t_{pd}¶	A or B	B or A			ns
t_{en}	$\overline{OE}$	A or B			ns
t_{dis}	$\overline{OE}$	A or B			ns

¶ This propagation delay is the calculated RC time constant of the typical on-state resistance of the switch and the specified load capacitance, when driven by an ideal voltage source (zero output impedance).

PRODUCT PREVIEW

PARAMETER MEASUREMENT INFORMATION

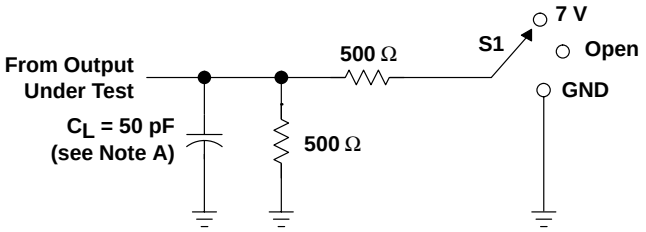

LOAD CIRCUIT

TEST	S1
t_{pd}	Open
t_{PLZ}/t_{PZL}	7 V
t_{PHZ}/t_{PZH}	Open

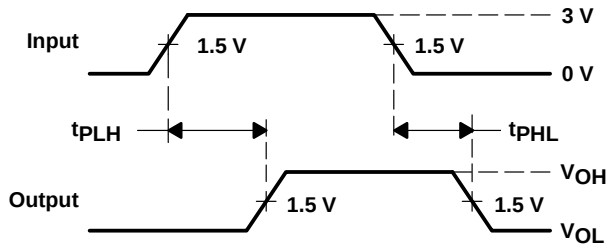

VOLTAGE WAVEFORMS
PROPAGATION DELAY TIMES

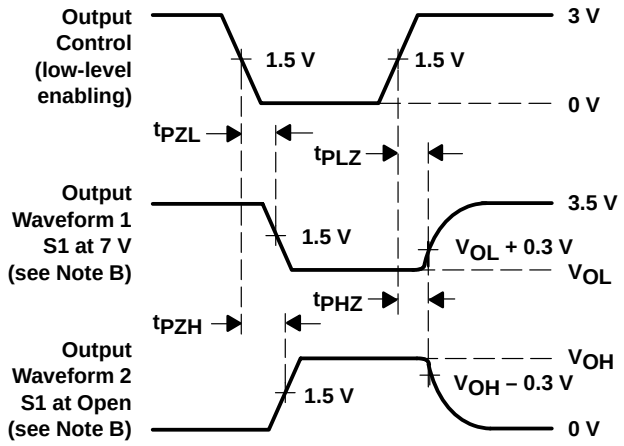

VOLTAGE WAVEFORMS
ENABLE AND DISABLE TIMES

NOTES: A. C_L includes probe and jig capacitance.
B. Waveform 1 is for an output with internal conditions such that the output is low except when disabled by the output control. Waveform 2 is for an output with internal conditions such that the output is high except when disabled by the output control.
C. All input pulses are supplied by generators having the following characteristics: PRR ≤ 10 MHz, Z_O = 50 Ω, t_r ≤ 2.5 ns, t_f ≤ 2.5 ns.
D. The outputs are measured one at a time with one transition per measurement.
E. t_{PLZ} and t_{PHZ} are the same as t_{dis}.
F. t_{PZL} and t_{PZH} are the same as t_{en}.
G. t_{PLH} andt_{PHL} are the same as t_{pd}.

Figure 1. Load Circuit and Voltage Waveforms

PRODUCT PREVIEW

- **Functionally Equivalent to QS3245**
- **Standard ’245-Type Pinout**
- **5-Ω Switch Connection Between Two Ports**
- **TTL-Compatible Input Levels**
- **Package Options Include Plastic Small-Outline (DW), Shrink Small-Outline (DB, DBQ), Thin Very Small-Outline (DGV), and Thin Shrink Small-Outline (PW) Packages**

DB, DBQ, DGV, DW, OR PW PACKAGE
(TOP VIEW)

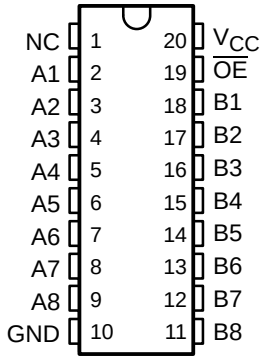

NC – No internal connection

description

The SN74CBT3245A provides eight bits of high-speed TTL-compatible bus switching in a standard ’245 device pinout. The low on-state resistance of the switch allows connections to be made with minimal propagation delay.

The device is organized as one 8-bit switch. When output enable ($\overline{OE}$) is low, the switch is on and port A is connected to port B. When $\overline{OE}$ is high, the switch is open and a high-impedance state exists between the two ports.

The SN74CBT3245A is characterized for operation from –40°C to 85°C.

FUNCTION TABLE

INPUT $\overline{OE}$	FUNCTION
L	A port = B port
H	Disconnect

logic diagram (positive logic)

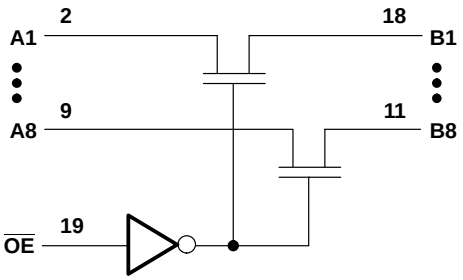

PRODUCTION DATA information is current as of publication date. Products conform to specifications per the terms of Texas Instruments standard warranty. Production processing does not necessarily include testing of all parameters.

Copyright © 1998, Texas Instruments Incorporated

absolute maximum ratings over operating free-air temperature range (unless otherwise noted)†

Supply voltage range, V_{CC} . . . . . –0.5 V to 7 V
Input voltage range, V_I (see Note 1) . . . . . –0.5 V to 7 V
Continuous channel current . . . . . 128 mA
Input clamp current, I_{IK} ($V_{I/O}$ < 0) . . . . . –50 mA
Package thermal impedance, θ_{JA} (see Note 2): DB package . . . . . 115°C/W
DBQ package . . . . . 118°C/W
DGV package . . . . . 146°C/W
DW package . . . . . 97°C/W
PW package . . . . . 128°C/W
Storage temperature range, T_{stg} . . . . . –65°C to 150°C

† Stresses beyond those listed under "absolute maximum ratings" may cause permanent damage to the device. These are stress ratings only, and functional operation of the device at these or any other conditions beyond those indicated under "recommended operating conditions" is not implied. Exposure to absolute-maximum-rated conditions for extended periods may affect device reliability.

NOTES: 1. The input and output negative-voltage ratings may be exceeded if the input and output clamp-current ratings are observed.
2. The package thermal impedance is calculated in accordance with JESD 51.

recommended operating conditions (see Note 3)

		MIN	MAX	UNIT
V_{CC}	Supply voltage	4	5.5	V
V_{IH}	High-level control input voltage	2		V
V_{IL}	Low-level control input voltage		0.8	V
T_A	Operating free-air temperature	–40	85	°C

NOTE 3: All unused control inputs of the device must be held at V_{CC} or GND to ensure proper device operation. Refer to the TI application report, *Implications of Slow or Floating CMOS Inputs*, literature number SCBA004.

electrical characteristics over recommended operating free-air temperature range (unless otherwise noted)

PARAMETER		TEST CONDITIONS			MIN	TYP‡	MAX	UNIT
V_{IK}		V_{CC} = 4.5 V,	I_I = –18 mA				–1.2	V
I_I		V_{CC} = 5.5 V,	V_I = 5.5 V or GND				±5	µA
I_{CC}		V_{CC} = 5.5 V,	I_O = 0,	V_I = V_{CC} or GND			50	µA
ΔI_{CC}§	Control inputs	V_{CC} = 5.5 V,	One input at 3.4 V,	Other inputs at V_{CC} or GND			3.5	mA
C_i	Control inputs	V_I = 3 V or 0				4		pF
$C_{io(OFF)}$		V_O = 3 V or 0,	$\overline{OE}$ = V_{CC}			4		pF
r_{on}¶		V_{CC} = 4 V, TYP at V_{CC} = 4 V	V_I = 2.4 V,	I_I = 15 mA				Ω
		V_{CC} = 4.5 V	V_I = 0	I_I = 64 mA		5	7	
				I_I = 30 mA		5	7	
			V_I = 2.4 V,	I_I = 15 mA		10	15	

‡ All typical values are at V_{CC} = 5 V (unless otherwise noted), T_A = 25°C.
§ This is the increase in supply current for each input that is at the specified TTL voltage level rather than V_{CC} or GND.
¶ Measured by the voltage drop between the A and B terminals at the indicated current through the switch. On-state resistance is determined by the lowest voltage of the two (A or B) terminals.

switching characteristics over recommended operating free-air temperature range, C_L = 50 pF (unless otherwise noted) (see Figure 1)

PARAMETER	FROM (INPUT)	TO (OUTPUT)	V_{CC} = 4 V		V_{CC} = 5 V ± 0.5 V		UNIT
			MIN	MAX	MIN	MAX	
t_{pd}†	A or B	B or A		0.35		0.25	ns
t_{en}	$\overline{OE}$	A or B		6.4	1.9	5.9	ns
t_{dis}	$\overline{OE}$	A or B		5.7	2.1	6	ns

† The propagation delay is the calculated RC time constant of the typical on-state resistance of the switch and the specified load capacitance, when driven by an ideal voltage source (zero output impedance).

PARAMETER MEASUREMENT INFORMATION

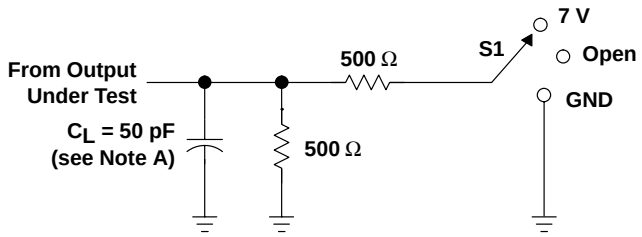

LOAD CIRCUIT

TEST	S1
t_{pd}	Open
t_{PLZ}/t_{PZL}	7 V
t_{PHZ}/t_{PZH}	Open

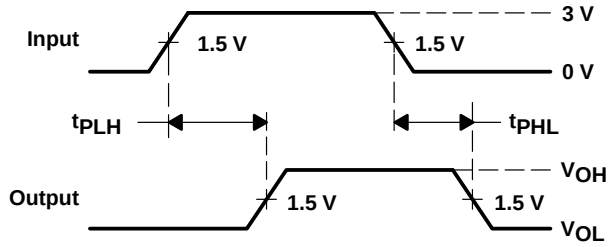

VOLTAGE WAVEFORMS
PROPAGATION DELAY TIMES

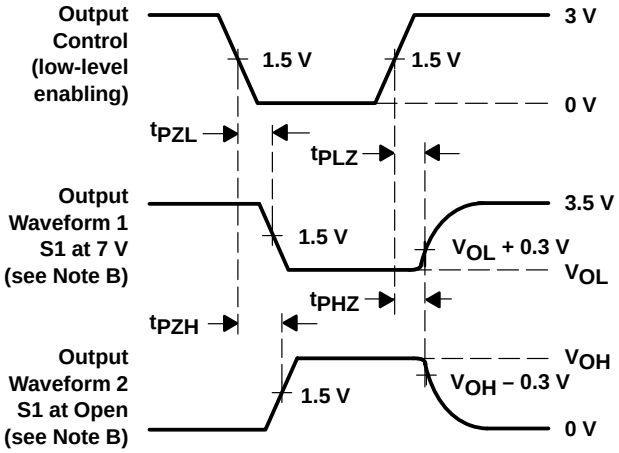

VOLTAGE WAVEFORMS
ENABLE AND DISABLE TIMES

NOTES:
A. C_L includes probe and jig capacitance.
B. Waveform 1 is for an output with internal conditions such that the output is low except when disabled by the output control. Waveform 2 is for an output with internal conditions such that the output is high except when disabled by the output control.
C. All input pulses are supplied by generators having the following characteristics: PRR ≤ 10 MHz, Z_O = 50 Ω, t_r ≤ 2.5 ns, t_f ≤ 2.5 ns.
D. The outputs are measured one at a time with one transition per measurement.
E. t_{PLZ} and t_{PHZ} are the same as t_{dis}.
F. t_{PZL} and t_{PZH} are the same as t_{en}.
G. t_{PLH} and t_{PHL} are the same as t_{pd}.

Figure 1. Load Circuit and Voltage Waveforms

- **Functionally Equivalent to QS3245**
- **Standard ’245-Type Pinout**
- **25-Ω Switch Connection Between Two Ports**
- **TTL-Compatible Input Levels**
- **Package Options Include Plastic Small-Outline (DW), Shrink Small-Outline (DB, DBQ), Thin Very Small-Outline (DGV), and Thin Shrink Small-Outline (PW) Packages**

DB, DBQ, DGV, DW, OR PW PACKAGE
(TOP VIEW)

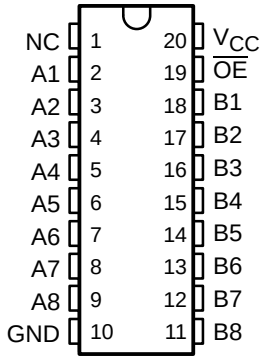

NC – No internal connection

description

The SN74CBTR3245 provides eight bits of high-speed TTL-compatible bus switching in a standard ’245 device pinout. The low on-state resistance of the switch allows connections to be made with minimal propagation delay.

The device is organized as one 8-bit switch. When output enable ($\overline{OE}$) is low, the switch is on and port A is connected to port B. When $\overline{OE}$ is high, the switch is open and a high-impedance state exists between the two ports.

The device has equivalent 25-Ω series resistors to reduce signal-reflection noise. This eliminates the need for external terminating resistors.

The SN74CBTR3245 is characterized for operation from –40°C to 85°C.

FUNCTION TABLE

INPUT $\overline{OE}$	FUNCTION
L	A port = B port
H	Disconnect

logic diagram (positive logic)

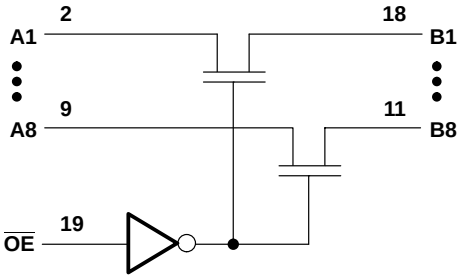

PRODUCT PREVIEW

PRODUCT PREVIEW information concerns products in the formative or design phase of development. Characteristic data and other specifications are design goals. Texas Instruments reserves the right to change or discontinue these products without notice.

Copyright © 1998, Texas Instruments Incorporated

PRODUCT PREVIEW

absolute maximum ratings over operating free-air temperature range (unless otherwise noted)†

Supply voltage range, V_{CC} . . . . . –0.5 V to 7 V
Input voltage range, V_I (see Note 1) . . . . . –0.5 V to 7 V
Continuous channel current . . . . . 128 mA
Input clamp current, I_{IK} ($V_{I/O}$ < 0) . . . . . –50 mA
Package thermal impedance, θ_{JA} (see Note 2): DB package . . . . . 115°C/W
DBQ package . . . . . 118°C/W
DGV package . . . . . 146°C/W
DW package . . . . . 97°C/W
PW package . . . . . 128°C/W
Storage temperature range, T_{stg} . . . . . –65°C to 150°C

† Stresses beyond those listed under "absolute maximum ratings" may cause permanent damage to the device. These are stress ratings only, and functional operation of the device at these or any other conditions beyond those indicated under "recommended operating conditions" is not implied. Exposure to absolute-maximum-rated conditions for extended periods may affect device reliability.

NOTES: 1. The input and output negative-voltage ratings may be exceeded if the input and output clamp-current ratings are observed.
2. The package thermal impedance is calculated in accordance with JESD 51.

recommended operating conditions (see Note 3)

		MIN	MAX	UNIT
V_{CC}	Supply voltage	4.5	5.5	V
V_{IH}	High-level control input voltage	2		V
V_{IL}	Low-level control input voltage		0.8	V
T_A	Operating free-air temperature	–40	85	°C

NOTE 3: All unused control inputs of the device must be held at V_{CC} or GND to ensure proper device operation. Refer to the TI application report, *Implications of Slow or Floating CMOS Inputs*, literature number SCBA004.

electrical characteristics over recommended operating free-air temperature range (unless otherwise noted)

PARAMETER		TEST CONDITIONS			MIN	TYP‡	MAX	UNIT
V_{IK}		V_{CC} = 4.5 V,	I_I = –18 mA				–1.2	V
I_I		V_{CC} = 5.5 V,	V_I = 5.5 V or GND				±5	µA
I_{CC}		V_{CC} = 5.5 V,	I_O = 0,	V_I = V_{CC} or GND			50	µA
ΔI_{CC}§	Control inputs	V_{CC} = 5.5 V,	One input at 3.4 V,	Other inputs at V_{CC} or GND			3.5	mA
C_i	Control inputs	V_I = 3 V or 0						pF
$C_{io(OFF)}$		V_O = 3 V or 0,	$\overline{OE}$ = V_{CC}					pF
r_{on}¶		V_{CC} = 4.5 V	V_I = 0	I_I = 64 mA				Ω
				I_I = 30 mA				
			V_I = 2.4 V,	I_I = 15 mA				

‡ All typical values are at V_{CC} = 5 V (unless otherwise noted), T_A = 25°C.
§ This is the increase in supply current for each input that is at the specified TTL voltage level rather than V_{CC} or GND.
¶ Measured by the voltage drop between the A and B terminals at the indicated current through the switch. On-state resistance is determined by the lowest voltage of the two (A or B) terminals.

switching characteristics over recommended operating free-air temperature range, C_L = 50 pF (unless otherwise noted) (see Figure 1)

PARAMETER	FROM (INPUT)	TO (OUTPUT)	MIN	MAX	UNIT
t_{pd}†	A or B	B or A			ns
t_{en}	$\overline{OE}$	A or B			ns
t_{dis}	$\overline{OE}$	A or B			ns

† The propagation delay is the calculated RC time constant of the typical on-state resistance of the switch and the specified load capacitance, when driven by an ideal voltage source (zero output impedance).

PARAMETER MEASUREMENT INFORMATION

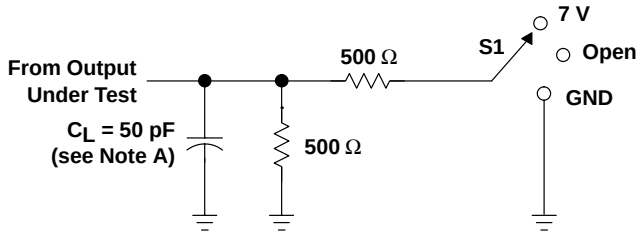

LOAD CIRCUIT

TEST	S1
t_{pd}	Open
t_{PLZ}/t_{PZL}	7 V
t_{PHZ}/t_{PZH}	Open

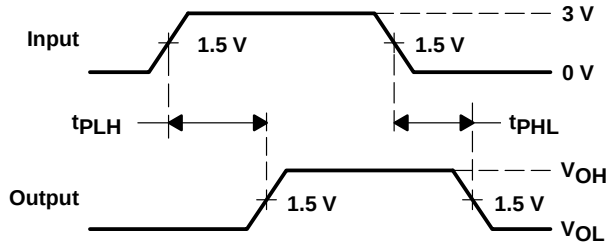

VOLTAGE WAVEFORMS
PROPAGATION DELAY TIMES

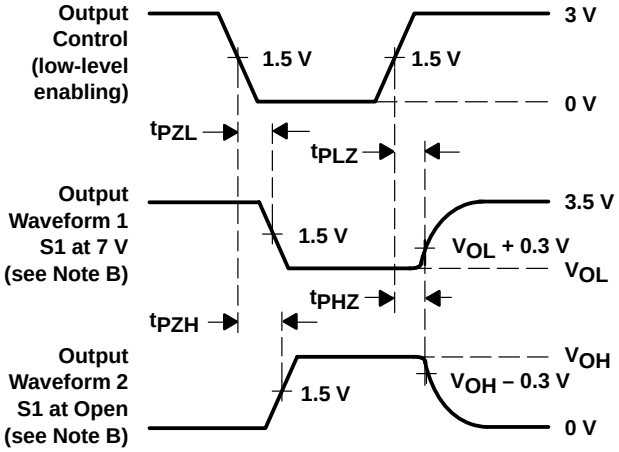

VOLTAGE WAVEFORMS
ENABLE AND DISABLE TIMES

NOTES:
A. C_L includes probe and jig capacitance.
B. Waveform 1 is for an output with internal conditions such that the output is low except when disabled by the output control. Waveform 2 is for an output with internal conditions such that the output is high except when disabled by the output control.
C. All input pulses are supplied by generators having the following characteristics: PRR ≤ 10 MHz, Z_O = 50 Ω, t_r ≤ 2.5 ns, t_f ≤ 2.5 ns.
D. The outputs are measured one at a time with one transition per measurement.
E. t_{PLZ} and t_{PHZ} are the same as t_{dis}.
F. t_{PZL} and t_{PZH} are the same as t_{en}.
G. t_{PLH} and t_{PHL} are the same as t_{pd}.

Figure 1. Load Circuit and Voltage Waveforms

PRODUCT PREVIEW

- **Functionally Equivalent to QS3251**
- **5-Ω Switch Connection Between Two Ports**
- **TTL-Compatible Input Levels**
- **Package Options Include Plastic Small-Outline (D), Shrink Small-Outline (DB, DBQ), Thin Very Small-Outline (DGV), and Thin Shrink Small-Outline (PW) Packages**

D, DB, DBQ, DGV, OR PW PACKAGE
(TOP VIEW)

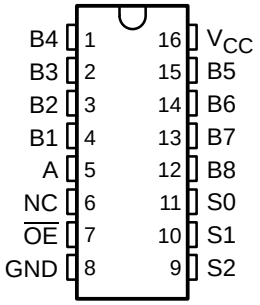

NC – No internal connection

description

The SN74CBT3251 is a 1-of-8 high-speed TTL-compatible FET multiplexer/demultiplexer. The low on-state resistance of the switch allows connections to be made with minimal propagation delay.

When output enable ($\overline{OE}$) is low, the SN74CBT3251 is enabled. S0, S1, and S2 select one of the B outputs for the A-input data.

The SN74CBT3251 is characterized for operation from –40°C to 85°C.

FUNCTION TABLE
(each multiplexer/demultiplexer)

INPUTS				FUNCTION
$\overline{OE}$	S2	S1	S0	
L	L	L	L	A port = B1 port
L	L	L	H	A port = B2 port
L	L	H	L	A port = B3 port
L	L	H	H	A port = B4 port
L	H	L	L	A port = B5 port
L	H	L	H	A port = B6 port
L	H	H	L	A port = B7 port
L	H	H	H	A port = B8 port
H	X	X	X	Disconnect

PRODUCTION DATA information is current as of publication date. Products conform to specifications per the terms of Texas Instruments standard warranty. Production processing does not necessarily include testing of all parameters.

Copyright © 1998, Texas Instruments Incorporated

logic diagram (positive logic)

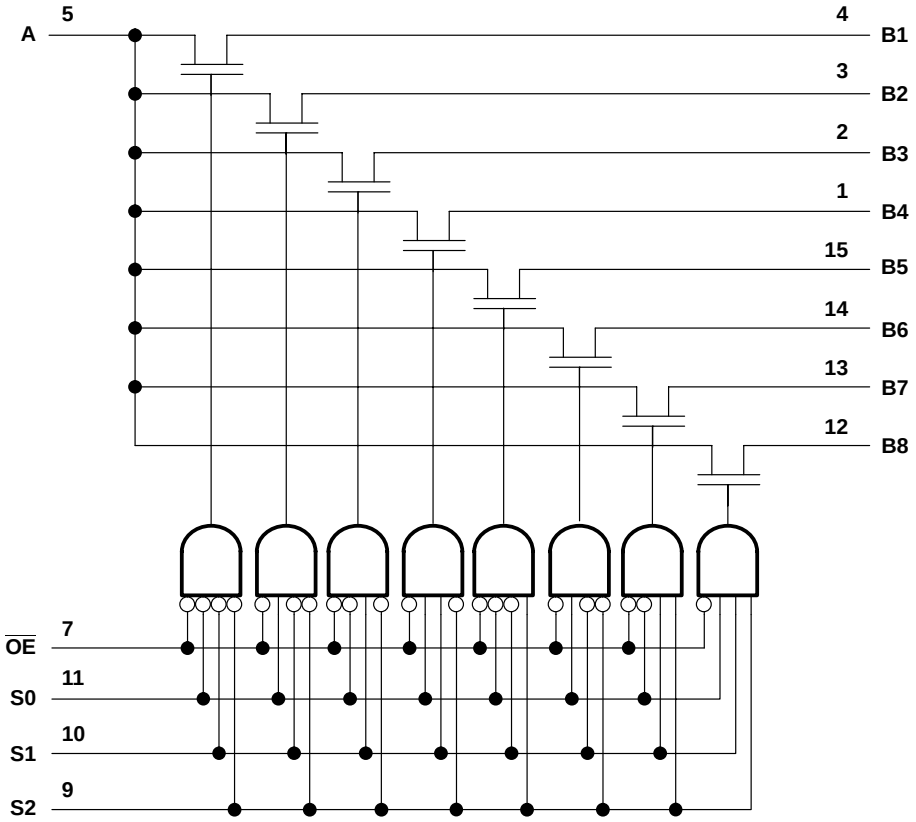

absolute maximum ratings over operating free-air temperature range (unless otherwise noted)†

Supply voltage range, V_{CC}	–0.5 V to 7 V
Input voltage range, V_I (see Note 1)	–0.5 V to 7 V
Continuous channel current	128 mA
Input clamp current, I_K ($V_{I/O} < 0$)	–50 mA
Package thermal impedance, θ_{JA} (see Note 2): D package	113°C/W
DB package	131°C/W
DBQ package	139°C/W
DGV package	180°C/W
PW package	149°C/W
Storage temperature range, T_{stg}	–65°C to 150°C

† Stresses beyond those listed under “absolute maximum ratings” may cause permanent damage to the device. These are stress ratings only, and functional operation of the device at these or any other conditions beyond those indicated under “recommended operating conditions” is not implied. Exposure to absolute-maximum-rated conditions for extended periods may affect device reliability.

NOTES: 1. The input and output negative-voltage ratings may be exceeded if the input and output clamp-current ratings are observed.
2. The package thermal impedance is calculated in accordance with JESD 51.

recommended operating conditions (see Note 3)

		MIN	MAX	UNIT
V_{CC}	Supply voltage	4	5.5	V
V_{IH}	High-level control input voltage	2		V
V_{IL}	Low-level control input voltage		0.8	V
T_A	Operating free-air temperature	–40	85	°C

NOTE 3: All unused control inputs of the device must be held at V_{CC} or GND to ensure proper device operation. Refer to the TI application report, *Implications of Slow or Floating CMOS Inputs*, literature number SCBA004.

electrical characteristics over recommended operating free-air temperature range (unless otherwise noted)

PARAMETER		TEST CONDITIONS			MIN	TYP†	MAX	UNIT
V_{IK}		V_{CC} = 4.5 V,	I_I = –18 mA				–1.2	V
I_I		V_{CC} = 5.5 V,	V_I = 5.5 V or GND				±1	µA
I_{CC}		V_{CC} = 5.5 V,	I_O = 0,	V_I = V_{CC} or GND			3	µA
ΔI_{CC}‡	Control inputs	V_{CC} = 5.5 V,	One input at 3.4 V,	Other inputs at V_{CC} or GND			2.5	mA
C_i	Control inputs	V_I = 3 V or 0				3.5		pF
$C_{io(OFF)}$	A port	V_O = 3 V or 0,	$\overline{OE}$ = V_{CC}			17.5		pF
	B port					4		
r_{on}§		V_{CC} = 4 V, TYP at V_{CC} = 4 V	V_I = 2.4 V,	I_I = 15 mA		14	20	Ω
		V_{CC} = 4.5 V	V_I = 0	I_I = 64 mA		5	7	
				I_I = 30 mA		5	7	
			V_I = 2.4 V,	I_I = 15 mA		10	15	

† All typical values are at V_{CC} = 5 V (unless otherwise noted), T_A = 25°C.
‡ This is the increase in supply current for each input that is at the specified TTL voltage level rather than V_{CC} or GND.
§ Measured by the voltage drop between the A and the B terminals at the indicated current through the switch. On-state resistance is determined by the lower of the voltages of the two (A or B) terminals.

switching characteristics over recommended operating free-air temperature range, C_L = 50 pF (unless otherwise noted) (see Figure 1)

PARAMETER	FROM (INPUT)	TO (OUTPUT)	V_{CC} = 4 V		V_{CC} = 5 V ± 0.5 V		UNIT
			MIN	MAX	MIN	MAX	
t_{pd}¶	A or B	B or A		0.35		0.25	ns
t_{pd}	S	A		6	2	5.5	ns
t_{en}	S	B		6.4	1.5	5.6	ns
	$\overline{OE}$	A or B		6.4	1.6	5.8	
t_{dis}	S	B		6.8	1.9	6.4	ns
	$\overline{OE}$	A or B		6	2.3	6.2	

¶ The propagation delay is the calculated RC time constant of the typical on-state resistance of the switch and the specified load capacitance, when driven by an ideal voltage source (zero output impedance).

PARAMETER MEASUREMENT INFORMATION

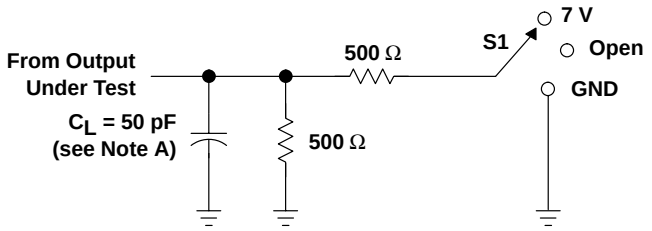

LOAD CIRCUIT

TEST	S1
t_{pd}	Open
t_{PLZ}/t_{PZL}	7 V
t_{PHZ}/t_{PZH}	Open

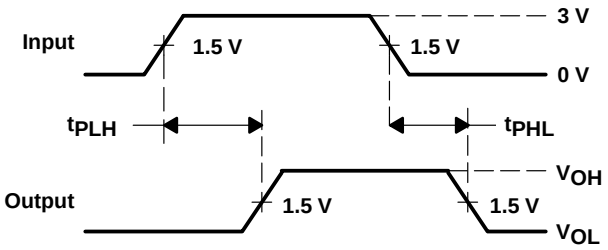

VOLTAGE WAVEFORMS
PROPAGATION DELAY TIMES

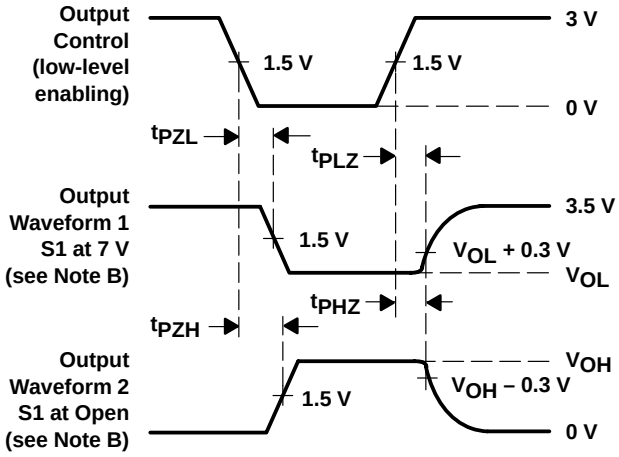

VOLTAGE WAVEFORMS
ENABLE AND DISABLE TIMES

NOTES:
A. C_L includes probe and jig capacitance.
B. Waveform 1 is for an output with internal conditions such that the output is low except when disabled by the output control. Waveform 2 is for an output with internal conditions such that the output is high except when disabled by the output control.
C. All input pulses are supplied by generators having the following characteristics: PRR ≤ 10 MHz, Z_O = 50 Ω, t_r ≤ 2.5 ns, t_f ≤ 2.5 ns.
D. The outputs are measured one at a time with one transition per measurement.
E. t_{PLZ} and t_{PHZ} are the same as t_{dis}.
F. t_{PZL} and t_{PZH} are the same as t_{en}.
G. t_{PLH} and t_{PHL} are the same as t_{pd}.

Figure 1. Load Circuit and Voltage Waveforms

- **Functionally Equivalent to QS3253**
- **5-Ω Switch Connection Between Two Ports**
- **TTL-Compatible Input Levels**
- **Package Options Include Plastic Small-Outline (D), Shrink Small-Outline (DB, DBQ), Thin Very Small-Outline (DGV), and Thin Shrink Small-Outline (PW) Packages**

D, DB, DBQ, DGV, OR PW PACKAGE
(TOP VIEW)

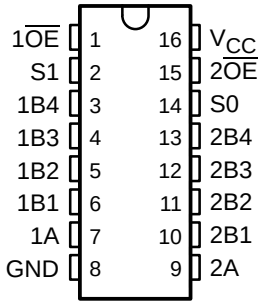

description

The SN74CBT3253 is a dual 1-of-4 high-speed TTL-compatible FET multiplexer/demultiplexer. The low on-state resistance of the switch allows connections to be made with minimal propagation delay.

$1\overline{OE}$, $2\overline{OE}$, S0, and S1 select the appropriate B output for the A-input data.

The SN74CBT3253 is characterized for operation from –40°C to 85°C.

FUNCTION TABLE
(each multiplexer/demultiplexer)

INPUTS			FUNCTION
$\overline{OE}$	S1	S0	
L	L	L	A port = B1 port
L	L	H	A port = B2 port
L	H	L	A port = B3 port
L	H	H	A port = B4 port
H	X	X	Disconnect

PRODUCTION DATA information is current as of publication date. Products conform to specifications per the terms of Texas Instruments standard warranty. Production processing does not necessarily include testing of all parameters.

Copyright © 1998, Texas Instruments Incorporated

logic diagram (positive logic)

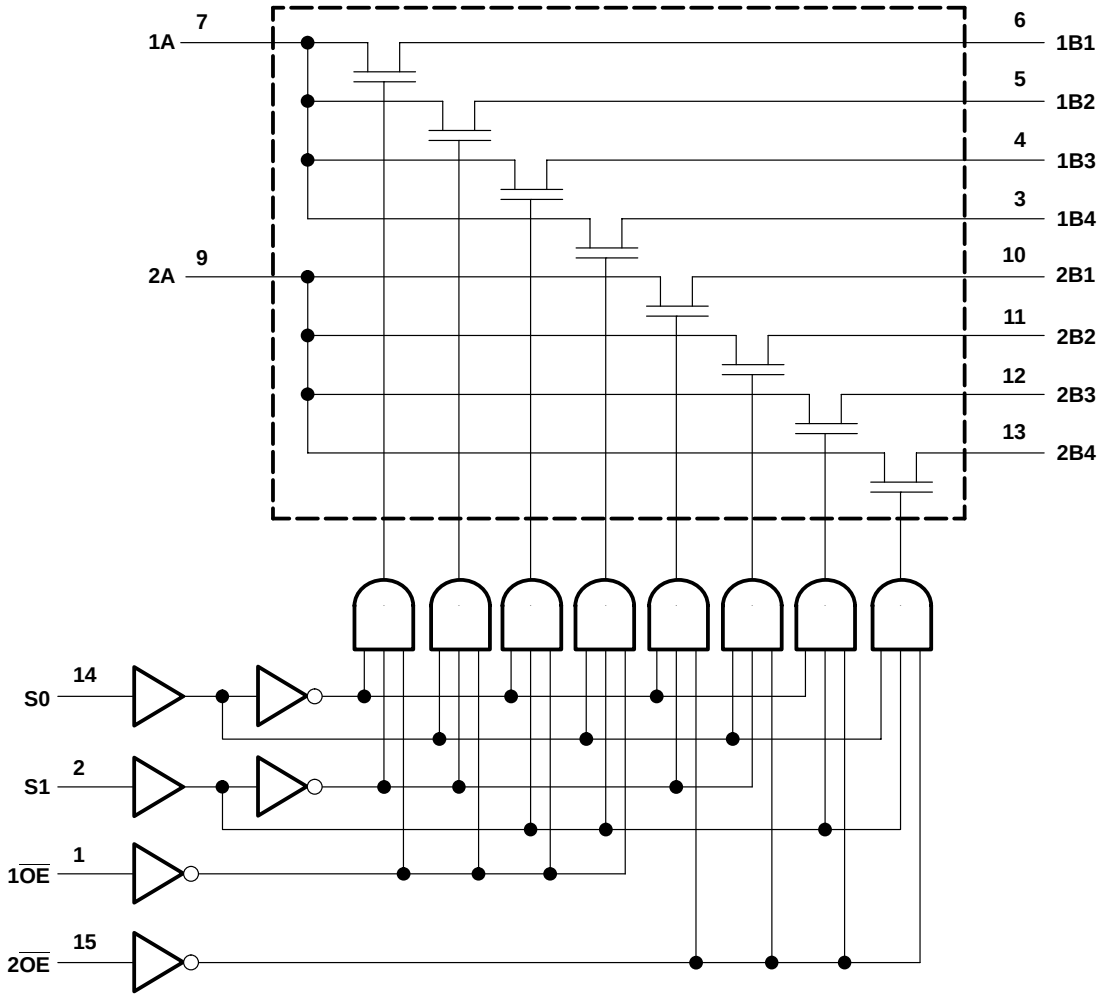

absolute maximum ratings over operating free-air temperature range (unless otherwise noted)†

Supply voltage range, V_{CC}	–0.5 V to 7 V
Input voltage range, V_I (see Note 1)	–0.5 V to 7 V
Continuous channel current	128 mA
Input clamp current, I_K ($V_{I/O} < 0$)	–50 mA
Package thermal impedance, θ_{JA} (see Note 2): D package	113°C/W
DB package	131°C/W
DBQ package	139°C/W
DGV package	180°C/W
PW package	149°C/W
Storage temperature range, T_{stg}	–65°C to 150°C

† Stresses beyond those listed under “absolute maximum ratings” may cause permanent damage to the device. These are stress ratings only, and functional operation of the device at these or any other conditions beyond those indicated under “recommended operating conditions” is not implied. Exposure to absolute-maximum-rated conditions for extended periods may affect device reliability.

NOTES: 1. The input and output negative-voltage ratings may be exceeded if the input and output clamp-current ratings are observed.
2. The package thermal impedance is calculated in accordance with JESD 51.

recommended operating conditions (see Note 3)

		MIN	MAX	UNIT
V_{CC}	Supply voltage	4	5.5	V
V_{IH}	High-level control input voltage	2		V
V_{IL}	Low-level control input voltage		0.8	V
T_A	Operating free-air temperature	–40	85	°C

NOTE 3: All unused control inputs of the device must be held at V_{CC} or GND to ensure proper device operation. Refer to the TI application report, *Implications of Slow or Floating CMOS Inputs*, literature number SCBA004.

electrical characteristics over recommended operating free-air temperature range (unless otherwise noted)

PARAMETER		TEST CONDITIONS			MIN	TYP†	MAX	UNIT
V_{IK}		V_{CC} = 4.5 V,	I_I = –18 mA				–1.2	V
I_I		V_{CC} = 5 V,	V_I = 5.5 V or GND				±1	µA
I_{CC}		V_{CC} = 5.5 V,	I_O = 0,	V_I = V_{CC} or GND			3	µA
ΔI_{CC}‡	Control inputs	V_{CC} = 5.5 V,	One input at 3.4 V,	Other inputs at V_{CC} or GND			2.5	mA
C_i	Control inputs	V_I = 3 V or 0				3.5		pF
$C_{io(OFF)}$	A port	V_O = 3 V or 0,	$\overline{OE}$ = V_{CC}			10		pF
	B port					4		
r_{on}§		V_{CC} = 4 V, TYP at V_{CC} = 4 V	V_I = 2.4 V,	I_I = 15 mA				Ω
		V_{CC} = 4.5 V	V_I = 0	I_I = 64 mA		5	7	
				I_I = 30 mA		5	7	
			V_I = 2.4 V,	I_I = 15 mA		10	15	

† All typical values are at V_{CC} = 5 V (unless otherwise noted), T_A = 25°C.
‡ This is the increase in supply current for each input that is at the specified TTL voltage level rather than V_{CC} or GND.
§ Measured by the voltage drop between the A and the B terminals at the indicated current through the switch. On-state resistance is determined by the lower voltage of the two (A or B) terminals.

switching characteristics over recommended operating free-air temperature range, C_L = 50 pF (unless otherwise noted) (see Figure 1)

PARAMETER	FROM (INPUT)	TO (OUTPUT)	V_{CC} = 4 V		V_{CC} = 5 V ± 0.5 V		UNIT
			MIN	MAX	MIN	MAX	
t_{pd}¶	A or B	B or A		0.35		0.25	ns
t_{pd}	S	A or B		6.6	1.6	6.2	ns
t_{en}	S	A or B		7.1	1.3	6.3	ns
	$\overline{OE}$			7.3	1.4	6.4	
t_{dis}	S	A or B		7.9	1.1	7.4	ns
	$\overline{OE}$			7.3	2.3	7	

¶ The propagation delay is the calculated RC time constant of the typical on-state resistance of the switch and the specified load capacitance, when driven by an ideal voltage source (zero output impedance).

PARAMETER MEASUREMENT INFORMATION

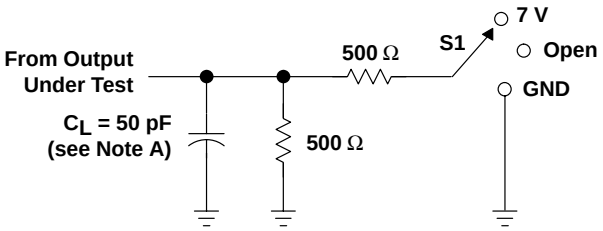

LOAD CIRCUIT

TEST	S1
t_{pd}	Open
t_{PLZ}/t_{PZL}	7 V
t_{PHZ}/t_{PZH}	Open

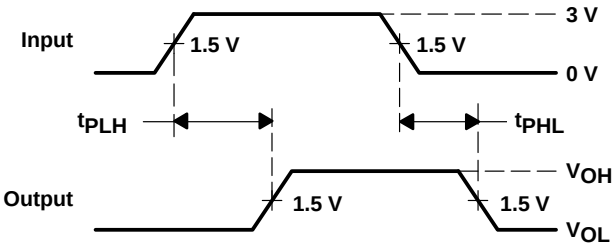

VOLTAGE WAVEFORMS
PROPAGATION DELAY TIMES

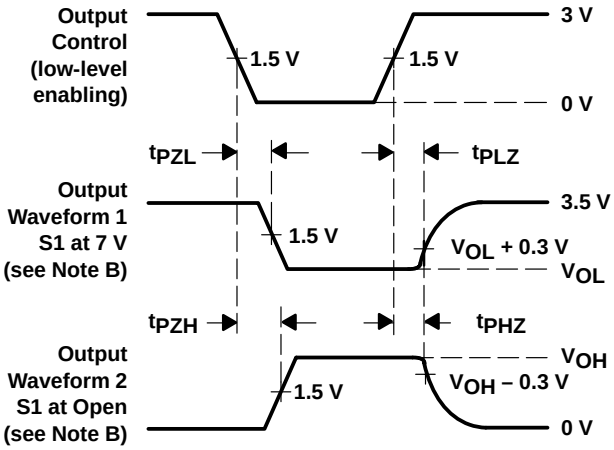

VOLTAGE WAVEFORMS
ENABLE AND DISABLE TIMES

NOTES:
A. C_L includes probe and jig capacitance.
B. Waveform 1 is for an output with internal conditions such that the output is low except when disabled by the output control. Waveform 2 is for an output with internal conditions such that the output is high except when disabled by the output control.
C. All input pulses are supplied by generators having the following characteristics: PRR ≤ 10 MHz, Z_O = 50 Ω, t_r ≤ 2.5 ns, t_f ≤ 2.5 ns.
D. The outputs are measured one at a time with one transition per measurement.
E. t_{PLZ} and t_{PHZ} are the same as t_{dis}.
F. t_{PZL} and t_{PZH} are the same as t_{en}.
G. t_{PLH} and t_{PHL} are the same as t_{pd}.

Figure 1. Load Circuit and Voltage Waveforms

- **Functionally Equivalent to QS3253**
- **25-Ω Switch Connection Between Two Ports**
- **TTL-Compatible Input Levels**
- **Package Options Include Plastic Small-Outline (D), Shrink Small-Outline (DB, DBQ), Thin Very Small-Outline (DGV), and Thin Shrink Small-Outline (PW) Packages**

D, DB, DBQ, DGV, OR PW PACKAGE
(TOP VIEW)

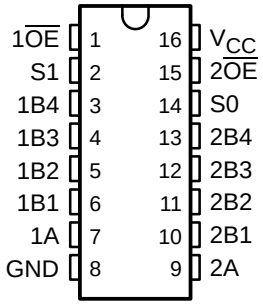

description

The SN74CBTR3253 is a dual 1-of-4 high-speed TTL-compatible FET multiplexer/demultiplexer. The low on-state resistance of the switch allows connections to be made with minimal propagation delay.

$1\overline{OE}$, $2\overline{OE}$, S0, and S1 select the appropriate B output for the A-input data.

The device has equivalent 25-Ω series resistors to reduce signal-reflection noise. This eliminates the need for external terminating resistors.

The SN74CBTR3253 is characterized for operation from –40°C to 85°C.

FUNCTION TABLE
(each multiplexer/demultiplexer)

INPUTS			FUNCTION
$\overline{OE}$	S1	S0	
L	L	L	A port = B1 port
L	L	H	A port = B2 port
L	H	L	A port = B3 port
L	H	H	A port = B4 port
H	X	X	Disconnect

PRODUCT PREVIEW

PRODUCT PREVIEW information concerns products in the formative or design phase of development. Characteristic data and other specifications are design goals. Texas Instruments reserves the right to change or discontinue these products without notice.

Copyright © 1998, Texas Instruments Incorporated

PRODUCT PREVIEW

logic diagram (positive logic)

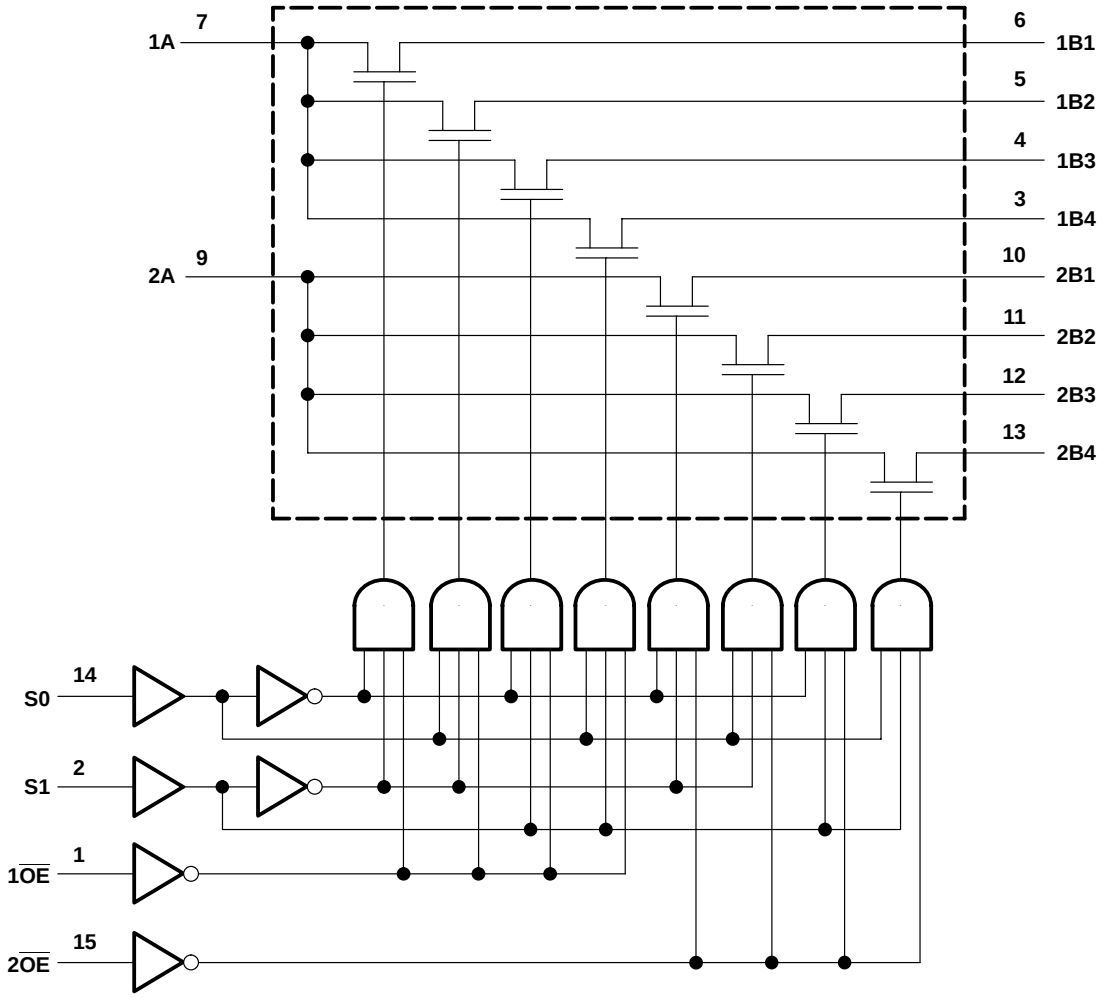

absolute maximum ratings over operating free-air temperature range (unless otherwise noted)†

Supply voltage range, V_{CC}	–0.5 V to 7 V
Input voltage range, V_I (see Note 1)	–0.5 V to 7 V
Continuous channel current	128 mA
Input clamp current, I_K ($V_{I/O} < 0$)	–50 mA
Package thermal impedance, θ_{JA} (see Note 2): D package	113°C/W
DB package	131°C/W
DBQ package	139°C/W
DGV package	180°C/W
PW package	149°C/W
Storage temperature range, T_{stg}	–65°C to 150°C

† Stresses beyond those listed under “absolute maximum ratings” may cause permanent damage to the device. These are stress ratings only, and functional operation of the device at these or any other conditions beyond those indicated under “recommended operating conditions” is not implied. Exposure to absolute-maximum-rated conditions for extended periods may affect device reliability.

NOTES: 1. The input and output negative-voltage ratings may be exceeded if the input and output clamp-current ratings are observed.
2. The package thermal impedance is calculated in accordance with JESD 51.

recommended operating conditions (see Note 3)

		MIN	MAX	UNIT
V_{CC}	Supply voltage	4.5	5.5	V
V_{IH}	High-level control input voltage	2		V
V_{IL}	Low-level control input voltage		0.8	V
T_A	Operating free-air temperature	–40	85	°C

NOTE 3: All unused control inputs of the device must be held at V_{CC} or GND to ensure proper device operation. Refer to the TI application report, *Implications of Slow or Floating CMOS Inputs*, literature number SCBA004.

electrical characteristics over recommended operating free-air temperature range (unless otherwise noted)

PARAMETER		TEST CONDITIONS			MIN	TYP†	MAX	UNIT
V_{IK}		V_{CC} = 4.5 V,	I_I = –18 mA				–1.2	V
I_I		V_{CC} = 5 V,	V_I = 5.5 V or GND				±1	µA
I_{CC}		V_{CC} = 5.5 V,	I_O = 0,	V_I = V_{CC} or GND			3	µA
ΔI_{CC}‡	Control inputs	V_{CC} = 5.5 V,	One input at 3.4 V,	Other inputs at V_{CC} or GND			2.5	mA
C_i	Control inputs	V_I = 3 V or 0						pF
$C_{io(OFF)}$	A port	V_O = 3 V or 0,	$\overline{OE}$ = V_{CC}					pF
	B port							
r_{on}§		V_{CC} = 4.5 V	V_I = 0	I_I = 64 mA				Ω
				I_I = 30 mA				
			V_I = 2.4 V,	I_I = 15 mA				

† All typical values are at V_{CC} = 5 V (unless otherwise noted), T_A = 25°C.
‡ This is the increase in supply current for each input that is at the specified TTL voltage level rather than V_{CC} or GND.
§ Measured by the voltage drop between the A and the B terminals at the indicated current through the switch. On-state resistance is determined by the lower voltage of the two (A or B) terminals.

switching characteristics over recommended operating free-air temperature range, C_L = 50 pF (unless otherwise noted) (see Figure 1)

PARAMETER	FROM (INPUT)	TO (OUTPUT)	MIN	MAX	UNIT
t_{pd}¶	A or B	B or A			ns
t_{pd}	S	A or B			ns
t_{en}	S	A or B			ns
	$\overline{OE}$				
t_{dis}	S	A or B			ns
	$\overline{OE}$				

¶ The propagation delay is the calculated RC time constant of the typical on-state resistance of the switch and the specified load capacitance, when driven by an ideal voltage source (zero output impedance).

PRODUCT PREVIEW

PARAMETER MEASUREMENT INFORMATION

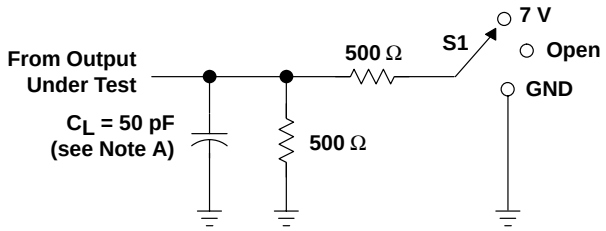

LOAD CIRCUIT

TEST	S1
t_{pd}	Open
t_{PLZ}/t_{PZL}	7 V
t_{PHZ}/t_{PZH}	Open

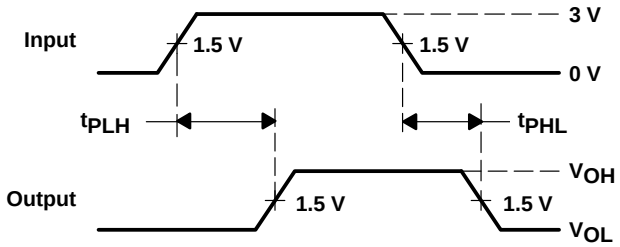

VOLTAGE WAVEFORMS
PROPAGATION DELAY TIMES

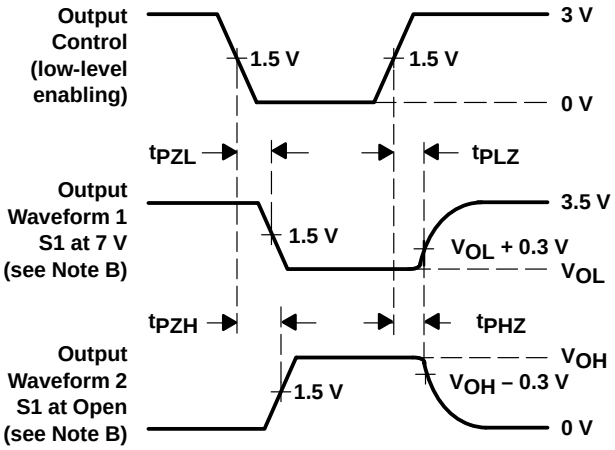

VOLTAGE WAVEFORMS
ENABLE AND DISABLE TIMES

NOTES:
A. C_L includes probe and jig capacitance.
B. Waveform 1 is for an output with internal conditions such that the output is low except when disabled by the output control. Waveform 2 is for an output with internal conditions such that the output is high except when disabled by the output control.
C. All input pulses are supplied by generators having the following characteristics: PRR ≤ 10 MHz, Z_O = 50 Ω, t_r ≤ 2.5 ns, t_f ≤ 2.5 ns.
D. The outputs are measured one at a time with one transition per measurement.
E. t_{PLZ} and t_{PHZ} are the same as t_{dis}.
F. t_{PZL} and t_{PZH} are the same as t_{en}.
G. t_{PLH} and t_{PHL} are the same as t_{pd}.

Figure 1. Load Circuit and Voltage Waveforms

PRODUCT PREVIEW

- **Functionally Equivalent to QS3257**
- **5-Ω Switch Connection Between Two Ports**
- **TTL-Compatible Input Levels**
- **Package Options Include Plastic Small-Outline (D), Shrink Small-Outline (DB, DBQ), and Thin Shrink Small-Outline (PW) Packages**

D, DB, DBQ, OR PW PACKAGE
(TOP VIEW)

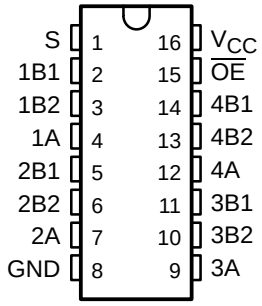

description

The SN74CBT3257 is a 4-bit 1-of-2 high-speed TTL-compatible FET multiplexer/demultiplexer. The low on-state resistance of the switch allows connections to be made with minimal propagation delay.

Output-enable ($\overline{OE}$) and select-control (S) inputs select the appropriate B1 and B2 outputs for the A-input data.

The SN74CBT3257 is characterized for operation from –40°C to 85°C.

FUNCTION TABLE

INPUTS		FUNCTION
$\overline{OE}$	S	
L	L	A port = B1 port
L	H	A port = B2 port
H	X	Disconnect

PRODUCTION DATA information is current as of publication date. Products conform to specifications per the terms of Texas Instruments standard warranty. Production processing does not necessarily include testing of all parameters.

Copyright © 1998, Texas Instruments Incorporated

logic diagram (positive logic)

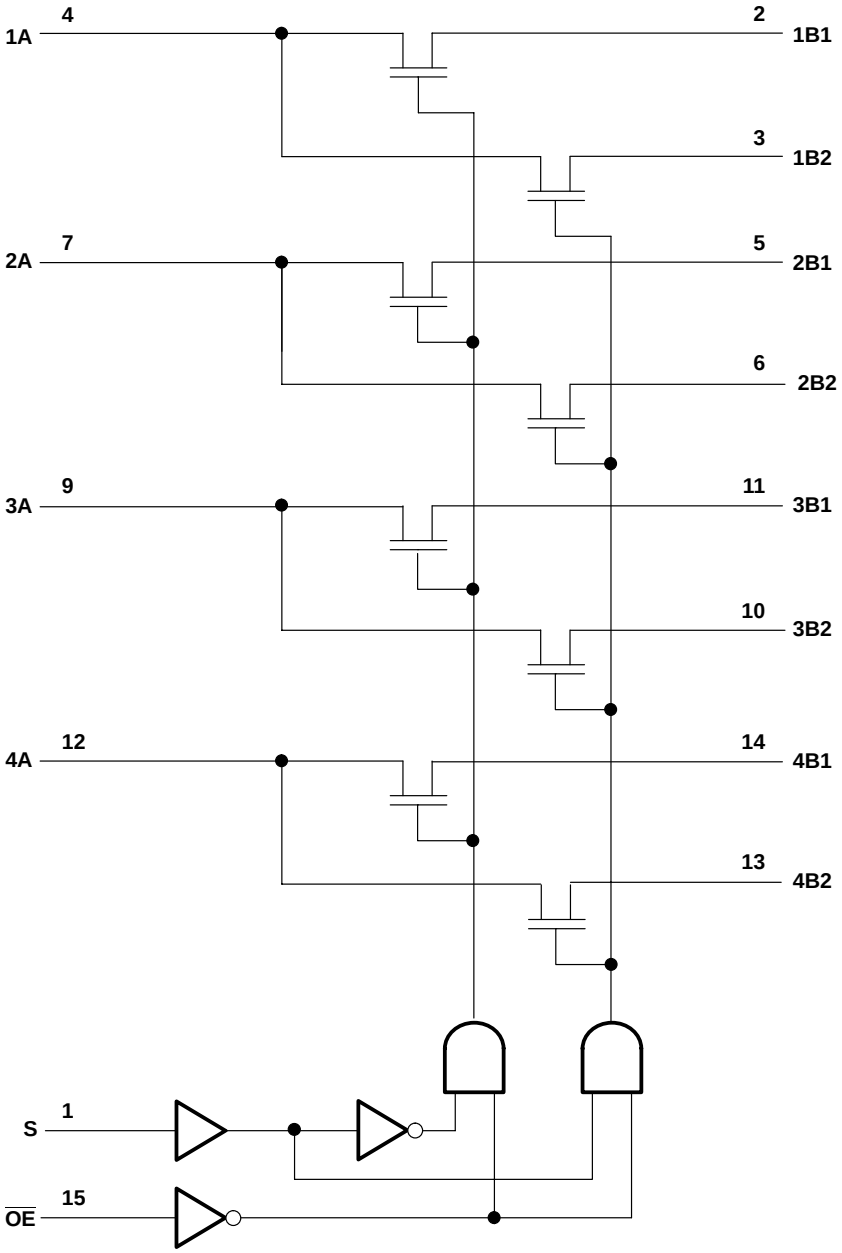

absolute maximum ratings over operating free-air temperature range (unless otherwise noted)†

Supply voltage range, V_{CC} . . . . . –0.5 V to 7 V
Input voltage range, V_I (see Note 1) . . . . . –0.5 V to 7 V
Continuous channel current . . . . . 128 mA
Input clamp current, I_K ($V_{I/O} < 0$) . . . . . –50 mA
Package thermal impedance, θ_{JA} (see Note 2): D package . . . . . 113°C/W
DB package . . . . . 131°C/W
DBQ package . . . . . 139°C/W
PW package . . . . . 149°C/W
Storage temperature range, T_{stg} . . . . . –65°C to 150°C

† Stresses beyond those listed under "absolute maximum ratings" may cause permanent damage to the device. These are stress ratings only, and functional operation of the device at these or any other conditions beyond those indicated under "recommended operating conditions" is not implied. Exposure to absolute-maximum-rated conditions for extended periods may affect device reliability.

NOTES: 1. The input and output negative-voltage ratings may be exceeded if the input and output clamp-current ratings are observed.
2. The package thermal impedance is calculated in accordance with JESD 51.

recommended operating conditions (see Note 3)

		MIN	MAX	UNIT
V_{CC}	Supply voltage	4	5.5	V
V_{IH}	High-level control input voltage	2		V
V_{IL}	Low-level control input voltage		0.8	V
T_A	Operating free-air temperature	–40	85	°C

NOTE 3: All unused control inputs of the device must be held at V_{CC} or GND to ensure proper device operation. Refer to the TI application report, *Implications of Slow or Floating CMOS Inputs*, literature number SCBA004.

electrical characteristics over recommended operating free-air temperature range (unless otherwise noted)

PARAMETER		TEST CONDITIONS			MIN	TYP‡	MAX	UNIT
V_{IK}		V_{CC} = 4.5 V,	I_I = –18 mA				–1.2	V
I_I		V_{CC} = 5.5 V,	V_I = 5.5 V or GND				±1	µA
I_{CC}		V_{CC} = 5.5 V,	I_O = 0,	$V_I = V_{CC}$ or GND			3	µA
ΔI_{CC}§	Control inputs	V_{CC} = 5.5 V,	One input at 3.4 V,	Other inputs at V_{CC} or GND			2.5	mA
C_i	Control inputs	V_I = 3 V or 0				3.5		pF
$C_{io(OFF)}$	A port	V_O = 3 V or 0,	$\overline{OE} = V_{CC}$			6.5		pF
	B port					4		
r_{on}¶		V_{CC} = 4 V, TYP at V_{CC} = 4 V	V_I = 2.4 V,	I_I = 15 mA		14	20	Ω
		V_{CC} = 4.5 V	V_I = 0	I_I = 64 mA		5	7	
				I_I = 30 mA		5	7	
			V_I = 2.4 V,	I_I = 15 mA		10	15	

‡ All typical values are at V_{CC} = 5 V (unless otherwise noted), T_A = 25°C.
§ This is the increase in supply current for each input that is at the specified TTL voltage level rather than V_{CC} or GND.
¶ Measured by the voltage drop between the A and the B terminals at the indicated current through the switch. On-state resistance is determined by the lowest voltage of the two (A or B) terminals.

switching characteristics over recommended operating free-air temperature range, C_L = 50 pF (unless otherwise noted) (see Figure 1)

PARAMETER	FROM (INPUT)	TO (OUTPUT)	V_{CC} = 4 V		V_{CC} = 5 V ± 0.5 V		UNIT
			MIN	MAX	MIN	MAX	
t_{pd}†	A or B	B or A		0.35		0.25	ns
t_{pd}	S	A		5.5	1.6	5	ns
t_{en}	S	B		5.7	1.6	5.2	ns
	$\overline{OE}$	A or B		5.6	1.8	5.1	
t_{dis}	S	B		5.2	1	5	ns
	$\overline{OE}$	A or B		5.5	2.2	5.5	

† The propagation delay is the calculated RC time constant of the typical on-state resistance of the switch and the specified load capacitance, when driven by an ideal voltage source (zero output impedance).

PARAMETER MEASUREMENT INFORMATION

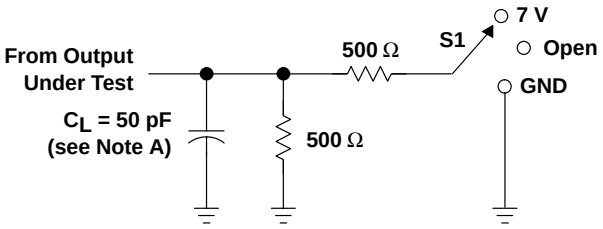

LOAD CIRCUIT

TEST	S1
t_{pd}	Open
t_{PLZ}/t_{PZL}	7 V
t_{PHZ}/t_{PZH}	Open

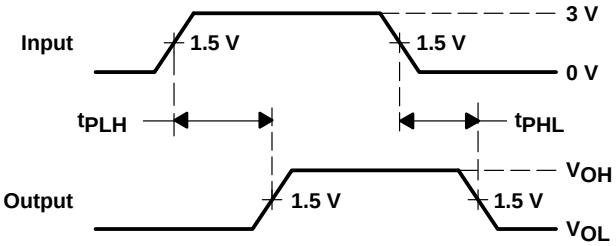

VOLTAGE WAVEFORMS
PROPAGATION DELAY TIMES

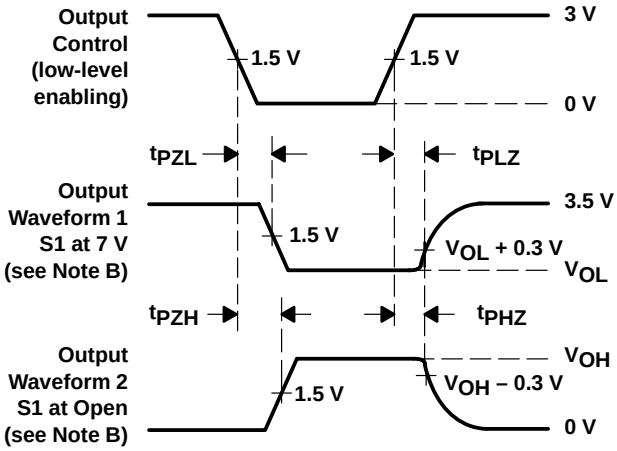

VOLTAGE WAVEFORMS
ENABLE AND DISABLE TIMES

NOTES:
A. C_L includes probe and jig capacitance.
B. Waveform 1 is for an output with internal conditions such that the output is low except when disabled by the output control. Waveform 2 is for an output with internal conditions such that the output is high except when disabled by the output control.
C. All input pulses are supplied by generators having the following characteristics: PRR ≤ 10 MHz, Z_O = 50 Ω, t_r ≤ 2.5 ns, t_f ≤ 2.5 ns.
D. The outputs are measured one at a time with one transition per measurement.
E. t_{PLZ} and t_{PHZ} are the same as t_{dis}.
F. t_{PZL} and t_{PZH} are the same as t_{en}.
G. t_{PLH} and t_{PHL} are the same as t_{pd}.

Figure 1. Load Circuit and Voltage Waveforms

- **5-Ω Switch Connection Between Two Ports**
- **TTL-Compatible Input Levels**
- **Package Options Include Plastic Small-Outline (D) and Thin Shrink Small-Outline (PW) Packages**

D OR PW PACKAGE
(TOP VIEW)

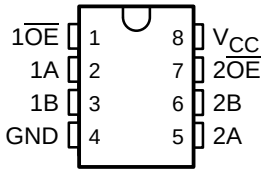

description

The SN74CBT3306 dual FET bus switch features independent line switches. Each switch is disabled when the associated output-enable ($\overline{OE}$) input is high.

The SN74CBT3306 is characterized for operation from –40°C to 85°C.

FUNCTION TABLE
(each bus switch)

INPUT $\overline{OE}$	FUNCTION
L	A port = B port
H	Disconnect

logic diagram (positive logic)

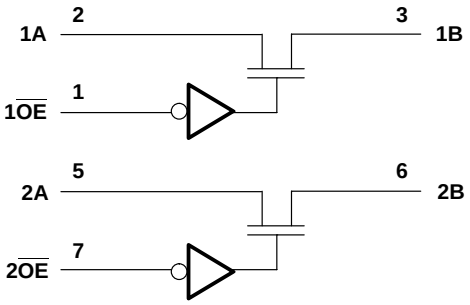

PRODUCTION DATA information is current as of publication date. Products conform to specifications per the terms of Texas Instruments standard warranty. Production processing does not necessarily include testing of all parameters.

Copyright © 1998, Texas Instruments Incorporated

absolute maximum ratings over operating free-air temperature range (unless otherwise noted)†

Supply voltage range, V_{CC} . . . . . –0.5 V to 7 V
Input voltage range, V_I (see Note 1) . . . . . –0.5 V to 7 V
Continuous channel current . . . . . 128 mA
Input clamp current, I_K ($V_{I/O} < 0$) . . . . . –50 mA
Package thermal impedance, θ_{JA} (see Note 2): D package . . . . . 197°C/W
PW package . . . . . 243°C/W
Storage temperature range, T_{stg} . . . . . –65°C to 150°C

† Stresses beyond those listed under "absolute maximum ratings" may cause permanent damage to the device. These are stress ratings only, and functional operation of the device at these or any other conditions beyond those indicated under "recommended operating conditions" is not implied. Exposure to absolute-maximum-rated conditions for extended periods may affect device reliability.

NOTES: 1. The input and output negative-voltage ratings may be exceeded if the input and output clamp-current ratings are observed.
2. The package thermal impedance is calculated in accordance with JESD 51.

recommended operating conditions (see Note 3)

		MIN	MAX	UNIT
V_{CC}	Supply voltage	4	5.5	V
V_{IH}	High-level control input voltage	2		V
V_{IL}	Low-level control input voltage		0.8	V
T_A	Operating free-air temperature	–40	85	°C

NOTE 3: All unused control inputs of the device must be held at V_{CC} or GND to ensure proper device operation. Refer to the TI application report, *Implications of Slow or Floating CMOS Inputs*, literature number SCBA004.

electrical characteristics over recommended operating free-air temperature range (unless otherwise noted)

PARAMETER		TEST CONDITIONS			MIN	TYP‡	MAX	UNIT
V_{IK}		V_{CC} = 4.5 V,	I_I = –18 mA				–1.2	V
I_I		V_{CC} = 5.5 V,	V_I = 5.5 V or GND				±1	µA
I_{CC}		V_{CC} = 5.5 V,	I_O = 0,	V_I = V_{CC} or GND			3	µA
ΔI_{CC}§	Control inputs	V_{CC} = 5.5 V,	One input at 3.4 V,	Other inputs at V_{CC} or GND			2.5	mA
C_i	Control inputs	V_I = 3 V or 0				3		pF
$C_{io(OFF)}$		V_O = 3 V or 0,	$\overline{OE}$ = V_{CC}			4		pF
r_{on}¶		V_{CC} = 4 V, TYP at V_{CC} = 4 V	V_I = 2.4 V,	I_I = 15 mA		14	20	Ω
		V_{CC} = 4.5 V	V_I = 0	I_I = 64 mA		5	7	
				I_I = 30 mA		5	7	
			V_I = 2.4 V,	I_I = 15 mA		10	15	

‡ All typical values are at V_{CC} = 5 V (unless otherwise noted), T_A = 25°C.
§ This is the increase in supply current for each input that is at the specified TTL voltage level rather than V_{CC} or GND.
¶ Measured by the voltage drop between the A and the B terminals at the indicated current through the switch. On-state resistance is determined by the lower of the voltages of the two (A or B) terminals.

switching characteristics over recommended operating free-air temperature range, C_L = 50 pF (unless otherwise noted) (see Figure 1)

PARAMETER	FROM (INPUT)	TO (OUTPUT)	V_{CC} = 4 V		V_{CC} = 5 V ± 0.5 V		UNIT
			MIN	MAX	MIN	MAX	
t_{pd}†	A or B	B or A		0.35		0.25	ns
t_{en}	$\overline{OE}$	A or B		5.6	1.8	5	ns
t_{dis}	$\overline{OE}$	A or B		4.6	1	4.3	ns

† The propagation delay is the calculated RC time constant of the typical on-state resistance of the switch and the specified load capacitance, when driven by an ideal voltage source (zero output impedance).

PARAMETER MEASUREMENT INFORMATION

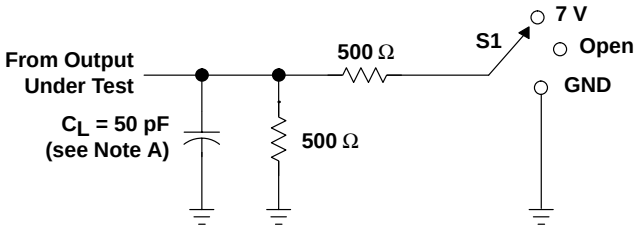

LOAD CIRCUIT

TEST	S1
t_{pd}	Open
t_{PLZ}/t_{PZL}	7 V
t_{PHZ}/t_{PZH}	Open

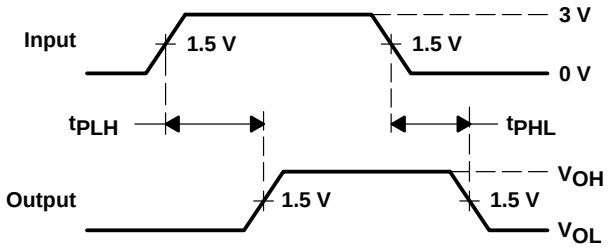

VOLTAGE WAVEFORMS
PROPAGATION DELAY TIMES

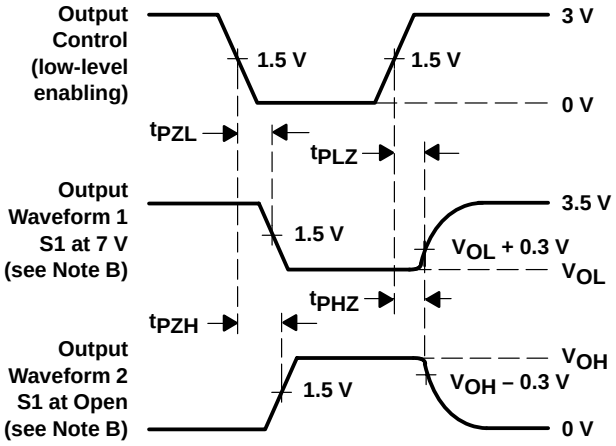

VOLTAGE WAVEFORMS
ENABLE AND DISABLE TIMES

NOTES: A. C_L includes probe and jig capacitance.
B. Waveform 1 is for an output with internal conditions such that the output is low except when disabled by the output control. Waveform 2 is for an output with internal conditions such that the output is high except when disabled by the output control.
C. All input pulses are supplied by generators having the following characteristics: PRR ≤ 10 MHz, Z_O = 50 Ω, t_r ≤ 2.5 ns, t_f ≤ 2.5 ns.
D. The outputs are measured one at a time with one transition per measurement.
E. t_{PLZ} and t_{PHZ} are the same as t_{dis}.
F. t_{PZL} and t_{PZH} are the same as t_{en}.
G. t_{PLH} and t_{PHL} are the same as t_{pd}.

Figure 1. Load Circuit and Voltage Waveforms

- **Standard ’245-Type Pinout**
- **5-Ω Switch Connection Between Two Ports**
- **TTL-Compatible Input Levels**
- **Package Options Include Plastic Shrink Small-Outline (DB), Thin Very Small-Outline (DGV), Small-Outline (DW), and Thin Shrink Small-Outline (PW) Packages**

DB, DGV, DW, OR PW PACKAGE
(TOP VIEW)

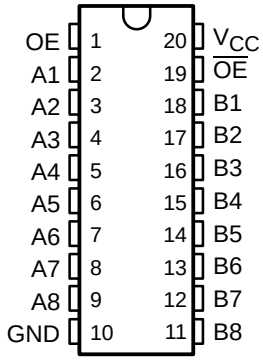

description

The SN74CBT3345 provides eight bits of high-speed TTL-compatible bus switching in a standard ’245 device pinout. The low on-state resistance of the switch allows connections to be made with minimal propagation delay.

The device is organized as one 8-bit switch bank with dual output-enable (OE and $\overline{OE}$) inputs. When $\overline{OE}$ is low or OE is high, the switch is on and port A is connected to port B. When $\overline{OE}$ is high and OE is low, the switch is open and a high-impedance state exists between the two ports.

The SN74CBT3345 is characterized for operation from 0°C to 70°C.

FUNCTION TABLE

INPUT $\overline{OE}$	FUNCTION
L	A port = B port
H	Disconnect

logic diagram (positive logic)

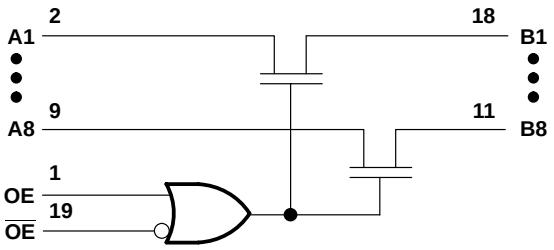

PRODUCTION DATA information is current as of publication date. Products conform to specifications per the terms of Texas Instruments standard warranty. Production processing does not necessarily include testing of all parameters.

Copyright © 1998, Texas Instruments Incorporated

absolute maximum ratings over operating free-air temperature range (unless otherwise noted)†

Supply voltage range, V_{CC} . . . . . –0.5 V to 7 V
Input voltage range, V_I (see Note 1) . . . . . –0.5 V to 7 V
Continuous channel current . . . . . 128 mA
Input clamp current, I_{IK} ($V_{I/O}$ < 0) . . . . . –50 mA
Package thermal impedance, θ_{JA} (see Note 2): DB package . . . . . 115°C
DGV package . . . . . 146°C
DW package . . . . . 97°C
PW package . . . . . 128°C
Storage temperature range, T_{stg} . . . . . –65°C to 150°C

† Stresses beyond those listed under "absolute maximum ratings" may cause permanent damage to the device. These are stress ratings only, and functional operation of the device at these or any other conditions beyond those indicated under "recommended operating conditions" is not implied. Exposure to absolute-maximum-rated conditions for extended periods may affect device reliability.

NOTES: 1. The input and output negative-voltage ratings may be exceeded if the input and output clamp-current ratings are observed.
2. The package thermal impedance is calculated in accordance with JESD 51.

recommended operating conditions (see Note 3)

		MIN	MAX	UNIT
V_{CC}	Supply voltage	4.5	5.5	V
V_{IH}	High-level control input voltage	2		V
V_{IL}	Low-level control input voltage		0.8	V
T_A	Operating free-air temperature	0	70	°C

NOTE 3: All unused control inputs of the device must be held at V_{CC} or GND to ensure proper device operation. Refer to the TI application report, *Implications of Slow or Floating CMOS Inputs*, literature number SCBA004.

electrical characteristics over recommended operating free-air temperature range (unless otherwise noted)

PARAMETER		TEST CONDITIONS			MIN	TYP‡	MAX	UNIT
V_{IK}		V_{CC} = 4.5 V,	I_I = –18 mA				–1.2	V
I_I		V_{CC} = 5.5 V,	V_I = 5.5 V or GND				±1	µA
I_{CC}		V_{CC} = 5.5 V,	I_O = 0,	V_I = V_{CC} or GND			50	µA
ΔI_{CC}§	Control inputs	V_{CC} = 5.5 V,	One input at 3.4 V,	Other inputs at V_{CC} or GND			3.5	mA
C_i	Control inputs	V_I = 3 V or 0				3		pF
$C_{io(OFF)}$		V_O = 3 V or 0,	$\overline{OE}$ = V_{CC} or OE = GND			6		pF
r_{on}¶		V_{CC} = 4.5 V	V_I = 0	I_I = 64 mA		5	7	Ω
				I_I = 30 mA		5	7	
			V_I = 2.4 V,	I_I = 15 mA		10	15	

‡ All typical values are at V_{CC} = 5 V, T_A = 25°C.
§ This is the increase in supply current for each input that is at the specified TTL voltage level rather than V_{CC} or GND.
¶ Measured by the voltage drop between the A and B terminals at the indicated current through the switch. On-state resistance is determined by the lower of the voltages of the two (A or B) terminals.

switching characteristics over recommended operating free-air temperature range, C_L = 50 pF (unless otherwise noted) (see Figure 1)

PARAMETER	FROM (INPUT)	TO (OUTPUT)	V_{CC} = 5 V ± 0.5 V		UNIT
			MIN	MAX	
t_{pd}†	A or B	B or A		0.25	ns
t_{en}	$\overline{OE}$ or OE	A or B	1	9.1	ns
t_{dis}	$\overline{OE}$ or OE	A or B	1	8.7	ns

† The propagation delay is the calculated RC time constant of the typical on-state resistance of the switch and the specified load capacitance, when driven by an ideal voltage source (zero output impedance).

PARAMETER MEASUREMENT INFORMATION

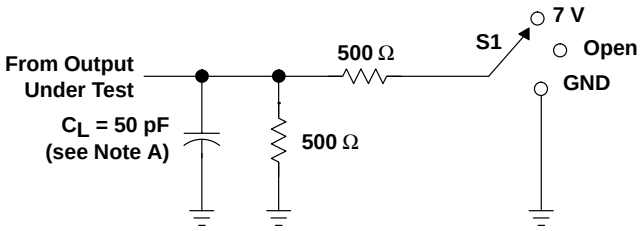

LOAD CIRCUIT

TEST	S1
t_{pd}	Open
t_{PLZ}/t_{PZL}	7 V
t_{PHZ}/t_{PZH}	Open

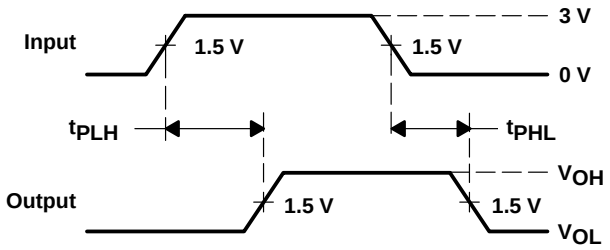

VOLTAGE WAVEFORMS
PROPAGATION DELAY TIMES

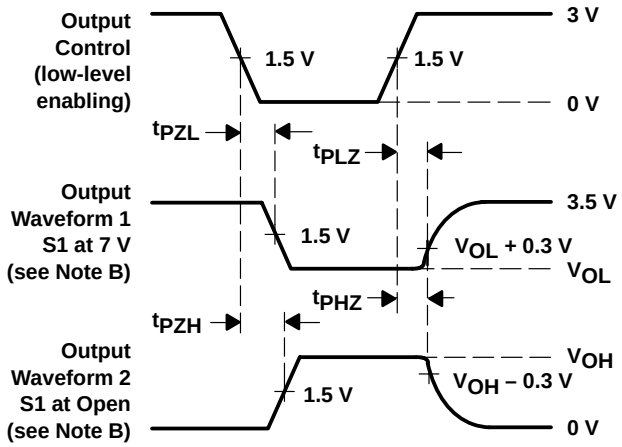

VOLTAGE WAVEFORMS
ENABLE AND DISABLE TIMES

NOTES:
A. C_L includes probe and jig capacitance.
B. Waveform 1 is for an output with internal conditions such that the output is low except when disabled by the output control. Waveform 2 is for an output with internal conditions such that the output is high except when disabled by the output control.
C. All input pulses are supplied by generators having the following characteristics: PRR ≤ 10 MHz, Z_O = 50 Ω, t_r ≤ 2.5 ns, t_f ≤ 2.5 ns.
D. The outputs are measured one at a time with one transition per measurement.
E. t_{PLZ} and t_{PHZ} are the same as t_{dis}.
F. t_{PZL} and t_{PZH} are the same as t_{en}.
G. t_{PLH} and t_{PHL} are the same as t_{pd}.

Figure 1. Load Circuit and Voltage Waveforms

- **Functionally Equivalent to QS3383 and QS3L383**
- **5-Ω Switch Connection Between Two Ports**
- **TTL-Compatible Input Levels**
- **Package Options Include Plastic Small-Outline (DW), Shrink Small-Outline (DB, DBQ), and Thin Shrink Small-Outline (PW) Packages, Ceramic DIPs (JT), and Ceramic Flat (W) Package**

SN54CBT3383 . . . JT OR W PACKAGE
SN74CBT3383 . . . DB, DBQ, DW, OR PW PACKAGE
(TOP VIEW)

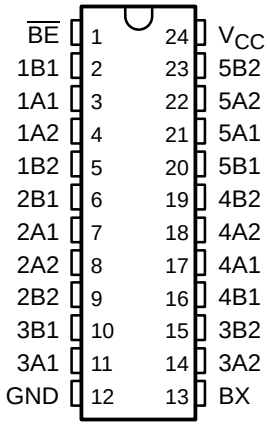

description

The ’CBT3383 devices provide ten bits of high-speed TTL-compatible bus switching or exchanging. The low on-state resistance of the switch allows connections to be made with minimal propagation delay.

The devices operate as a 10-bit bus switch or a 5-bit bus exchanger, which provides swapping of the A and B pairs of signals. The bus-exchange function is selected when BX is high. The switches are connected when $\overline{BE}$ is low.

The SN54CBT3383 is charaterized for operation over the full military temperature range of –55°C to 125°C. The SN74CBT3383 is characterized for operation from 0°C to 70°C.

FUNCTION TABLE

INPUTS		INPUTS/OUTPUTS	
$\overline{BE}$	BX	1A1–5A1	1A2–5A2
L	L	1B1–5B1	1B2–5B2
L	H	1B2–5B2	1B1–5B1
H	X	Z	Z

PRODUCTION DATA information is current as of publication date. Products conform to specifications per the terms of Texas Instruments standard warranty. Production processing does not necessarily include testing of all parameters.

Copyright © 1998, Texas Instruments Incorporated
On products compliant to MIL-PRF-38535, all parameters are tested unless otherwise noted. On all other products, production processing does not necessarily include testing of all parameters.

logic diagram (positive logic)

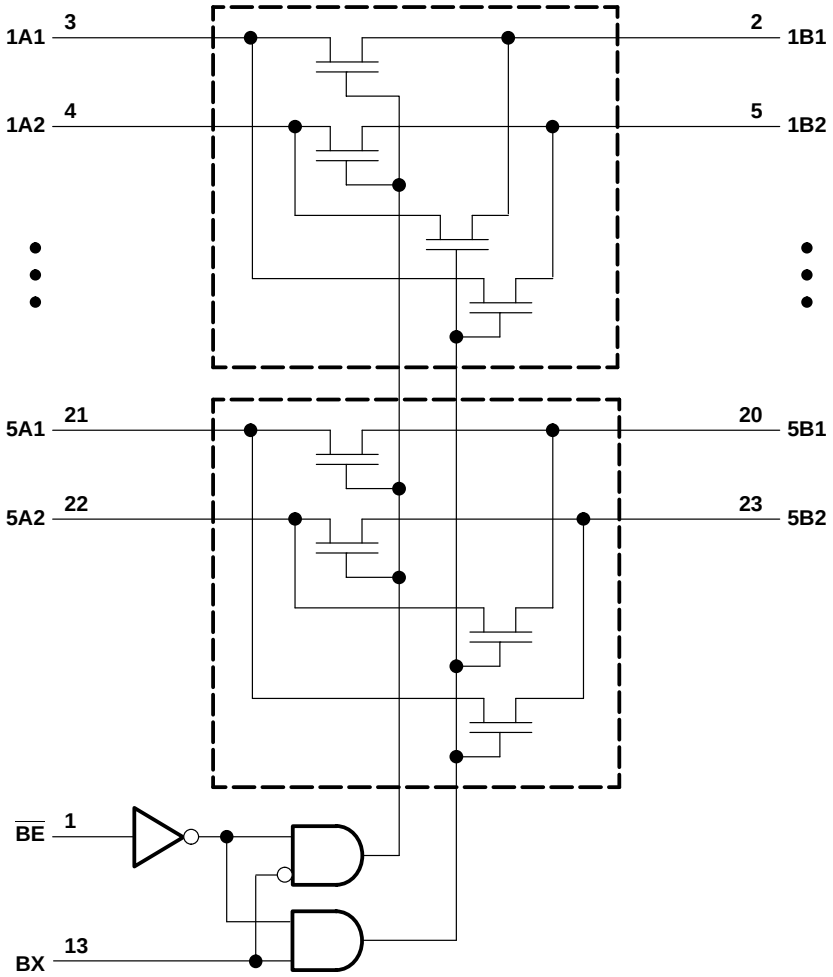

absolute maximum ratings over operating free-air temperature range (unless otherwise noted)†

Supply voltage range, V_{CC}		–0.5 V to 7 V
Input voltage range, V_I (see Note 1)		–0.5 V to 7 V
Continuous channel current		128 mA
Input clamp current, I_{IK} ($V_{I/O} < 0$)		–50 mA
Package thermal impedance, θ_{JA} (see Note 2):	DB package	104°C/W
	DBQ package	113°C/W
	DW package	81°C/W
	PW package	120°C/W
Storage temperature range, T_{stg}		–65°C to 150°C

† Stresses beyond those listed under “absolute maximum ratings” may cause permanent damage to the device. These are stress ratings only, and functional operation of the device at these or any other conditions beyond those indicated under “recommended operating conditions” is not implied. Exposure to absolute-maximum-rated conditions for extended periods may affect device reliability.

NOTES: 1. The input and output negative-voltage ratings may be exceeded if the input and output clamp-current ratings are observed.
2. The package thermal impedance is calculated in accordance with JESD 51.

recommended operating conditions (see Note 3)

		SN54CBT3383		SN74CBT3383		UNIT
		MIN	MAX	MIN	MAX	
V_{CC}	Supply voltage	4.5	5.5	4.5	5.5	V
V_{IH}	High-level control input voltage	2		2		V
V_{IL}	Low-level control input voltage		0.8		0.8	V
T_A	Operating free-air temperature	–55	125	0	70	°C

NOTE 3: All unused control inputs of the device must be held at V_{CC} or GND to ensure proper device operation. Refer to the TI application report, *Implications of Slow or Floating CMOS Inputs*, literature number SCBA004.

electrical characteristics over recommended operating free-air temperature range (unless otherwise noted)

PARAMETER		TEST CONDITIONS			SN54CBT3383			SN74CBT3383			UNIT
					MIN	TYP†	MAX	MIN	TYP†	MAX	
V_{IK}		V_{CC} = 4.5 V,	I_I = –18 mA				–1.2			–1.2	V
I_I		V_{CC} = 5.5 V,	V_I = 5.5 V or GND				±5			±1	µA
I_{CC}		V_{CC} = 5.5 V,	I_O = 0,	V_I = V_{CC} or GND			50			50	µA
ΔI_{CC}‡	Control inputs	V_{CC} = 5.5 V, One input at 3.4 V, Other inputs at V_{CC} or GND					2.5			2.5	mA
C_i	Control inputs	V_I = 3 V or 0							3		pF
		V_I = 2.5 V					5				
$C_{io(OFF)}$		V_O = 3 V or 0,	$\overline{BE}$ = V_{CC}						6		pF
		V_O = 2.5 V,	$\overline{BE}$ = V_{CC}				6				
r_{on}§		V_{CC} = 4.5 V	V_I = 0	I_I = 64 mA		5	9.2		5	7	Ω
				I_I = 30 mA					5	7	
			V_I = 2.4 V,	I_I = 15 mA		10	17		10	15	

† All typical values are at V_{CC} = 5 V, T_A = 25°C.
‡ This is the increase in supply current for each input that is at the specified TTL voltage level rather than V_{CC} or GND.
§ Measured by the voltage drop between the input terminal and the output terminal at the indicated current through the switch. On-state resistance is determined by the lowest voltage of the two (A or B) terminals.

switching characteristics over recommended operating free-air temperature range, C_L = 50 pF (unless otherwise noted) (see Figure 1)

PARAMETER	FROM (INPUT)	TO (OUTPUT)	SN54CBT3383		SN74CBT3383		UNIT
			MIN	MAX	MIN	MAX	
t_{pd}¶	A or B	B or A		1.5		0.25	ns
t_{pd}	BX	A or B	1	10.2	1	9.2	ns
t_{en}	$\overline{BE}$	A or B	1	10.8	1	8.6	ns
t_{dis}	$\overline{BE}$	A or B	1	8.2	1	7.5	ns

¶ The propagation delay is the calculated RC time constant of the typical on-state resistance of the switch and the specified load capacitance, when driven by an ideal voltage source (zero output impedance).

PARAMETER MEASUREMENT INFORMATION

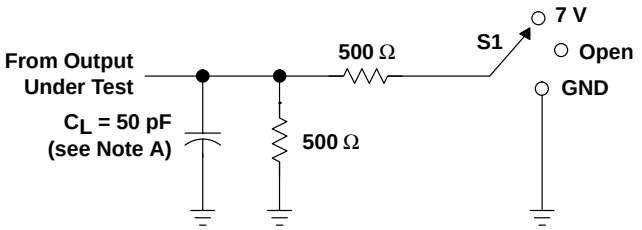

LOAD CIRCUIT

TEST	S1
t_{pd}	Open
t_{PLZ}/t_{PZL}	7 V
t_{PHZ}/t_{PZH}	Open

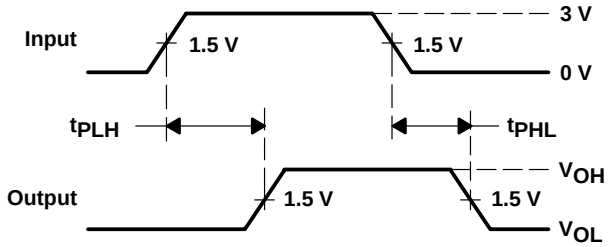

VOLTAGE WAVEFORMS
PROPAGATION DELAY TIMES

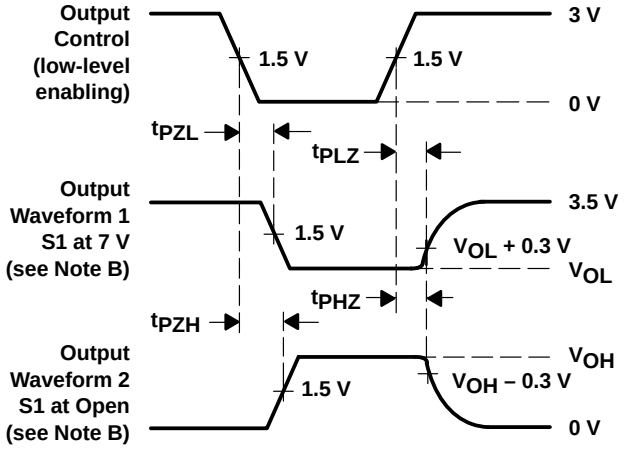

VOLTAGE WAVEFORMS
ENABLE AND DISABLE TIMES

NOTES:
A. C_L includes probe and jig capacitance.
B. Waveform 1 is for an output with internal conditions such that the output is low except when disabled by the output control. Waveform 2 is for an output with internal conditions such that the output is high except when disabled by the output control.
C. All input pulses are supplied by generators having the following characteristics: PRR ≤ 10 MHz, Z_O = 50 Ω, t_r ≤ 2.5 ns, t_f ≤ 2.5 ns.
D. The outputs are measured one at a time with one transition per measurement.
E. t_{PLZ} and t_{PHZ} are the same as t_{dis}.
F. t_{PZL} and t_{PZH} are the same as t_{en}.
G. t_{PLH} and t_{PHL} are the same as t_{pd}.

Figure 1. Load Circuit and Voltage Waveforms

- **Functionally Equivalent to QS3388**
- **5-Ω Switch Connection Between Two Ports**
- **TTL-Compatible Input Levels**
- **Bus Hold on Data Inputs/Outputs Eliminates the Need for External Pullup/Pulldown Resistors**
- **Package Options Include Plastic Small-Outline (DW), Shrink Small-Outline (DB), and Thin Shrink Small-Outline (PW) Packages**

DB, DW, OR PW PACKAGE
(TOP VIEW)

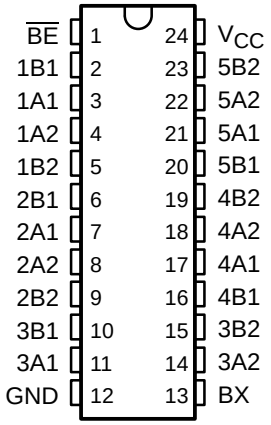

description

The SN74CBTH3383 provides ten bits of high-speed TTL-compatible bus switching or exchanging with bus hold on all I/Os. The low on-state resistance of the switch allows connection to be made with minimal propagation delay.

The device operates as a 10-bit bus switch or a 5-bit bus exchanger, which provides swapping of the A and B pairs of signals. The bus-exchange function is selected when $\overline{BE}$ is low. The switches are open when $\overline{BE}$ is high. Active bus-hold circuitry is provided to hold unused or floating data inputs/outputs at a valid logic level.

When the switch is turned off, the bus-hold circuit pulls all I/Os to V_{CC} or to GND, depending on the last-known state of the pin. The bus-hold feature is active only when the SN74CBTH3383 I/Os are in the high-impedance state.

The SN74CBTH3383 is characterized for operation from –40°C to 85°C.

FUNCTION TABLE

INPUTS		INPUTS/OUTPUTS		FUNCTION
$\overline{BE}$	BX	A1 PORT	A2 PORT	
L	L	B1 port	B2 port	A1 port = B1 port A2 port = B2 port
L	H	B2 port	B1 port	A2 port = B2 port A2 port = B1 port
H	X	Z	Z	Disconnect All ports = bus hold

PRODUCT PREVIEW

PRODUCT PREVIEW information concerns products in the formative or design phase of development. Characteristic data and other specifications are design goals. Texas Instruments reserves the right to change or discontinue these products without notice.

Copyright © 1998, Texas Instruments Incorporated

PRODUCT PREVIEW

logic diagram (positive logic)

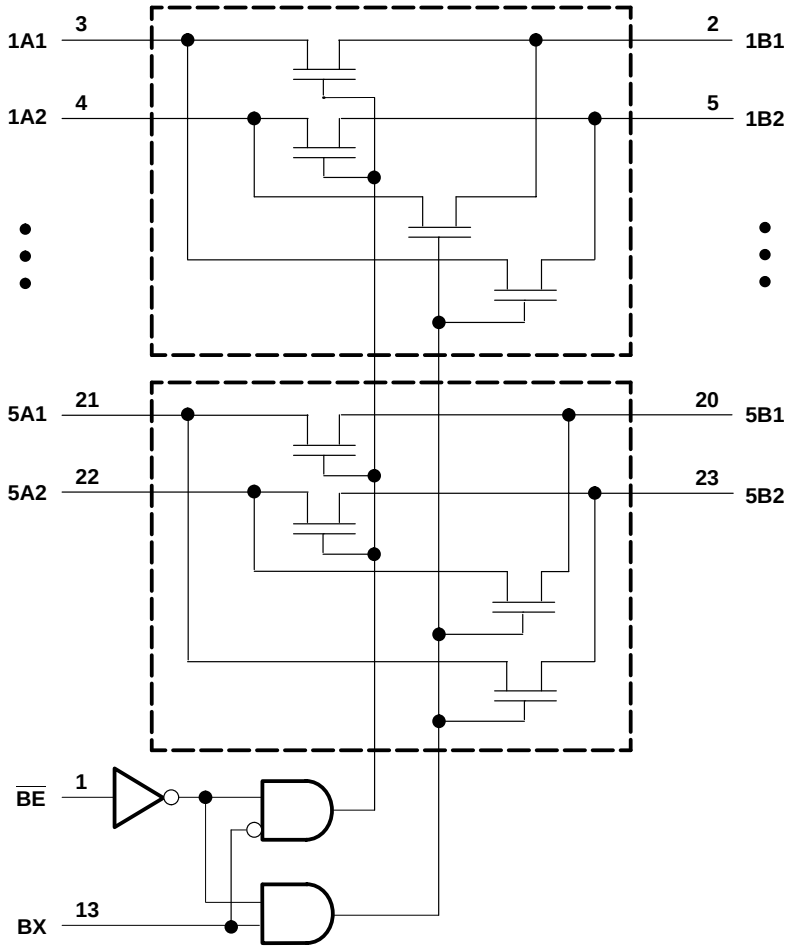

absolute maximum ratings over operating free-air temperature range (unless otherwise noted)†

Supply voltage range, V_{CC} to V_{DD}	–0.5 V to 7 V
Input voltage range, V_I (see Note 1)	–0.5 V to 7 V
Continuous channel current	128 mA
Input clamp current, I_{IK} ($V_{I/O} < 0$)	–50 mA
Package thermal impedance, θ_{JA} (see Note 2): DB package	104°C/W
DW package	81°C/W
PW package	120°C/W
Storage temperature range, T_{stg}	–65°C to 150°C

† Stresses beyond those listed under “absolute maximum ratings” may cause permanent damage to the device. These are stress ratings only, and functional operation of the device at these or any other conditions beyond those indicated under “recommended operating conditions” is not implied. Exposure to absolute-maximum-rated conditions for extended periods may affect device reliability.

NOTES: 1. The input and output negative-voltage ratings may be exceeded if the input and output clamp-current ratings are observed.
2. The package thermal impedance is calculated in accordance with JESD 51.

recommended operating conditions (see Note 3)

		MIN	MAX	UNIT
V_{CC}	Supply voltage	4	5.5	V
V_{IH}	High-level control input voltage	2		V
V_{IL}	Low-level control input voltage		0.8	V
T_A	Operating free-air temperature	–40	85	°C

NOTE 3: All unused control inputs of the device must be held at V_{CC} or GND to ensure proper device operation. Refer to the TI application report, *Implications of Slow or Floating CMOS Inputs*, literature number SCBA004.

electrical characteristics over recommended operating free-air temperature range (unless otherwise noted)

PARAMETER		TEST CONDITIONS			MIN	TYP†	MAX	UNIT
V_{IK}		V_{CC} = 4.5 V,	I_I = –18 mA				–1.2	V
I_I		V_{CC} = 5.5 V,	V_I = 5.5 V or GND				±1	µA
I_{BHL}‡		V_{CC} = 4.5 V,	V_I = 0.8 V		100			µA
I_{BHH}§		V_{CC} = 4.5 V,	V_I = 2 V		–100			µA
I_{BHLO}¶		V_{CC} = 5.5 V,	V_I = 0 to 5.5 V		500			µA
I_{BHHO}#		V_{CC} = 5.5 V,	V_I = 0 to 5.5 V		–500			µA
I_{CC}		V_{CC} = 5.5 V,	I_O = 0,	V_I = V_{CC} or GND			3	µA
ΔI_{CC}‖	Control inputs	V_{CC} = 5.5 V,	One input at 3.4 V,	Other inputs at V_{CC} or GND			2.5	mA
C_i	Control inputs	V_I = 3 V or 0				3		pF
$C_{io(OFF)}$		V_O = 3 V or 0,	$\overline{BE}$ = V_{CC}			6		pF
r_{on}☆		V_{CC} = 4 V, TYP at V_{CC} = 4 V	V_I = 2.4,	I_I = 15 mA		16	22	Ω
		V_{CC} = 4.5 V	V_I = 0	I_I = 64 mA		5	7	
				I_I = 30 mA		5	7	
			V_I = 2.4 V,	I_I = 15 mA		10	15	

† All typical values are at V_{CC} = 5 V (unless otherwise noted), T_A = 25°C.
‡ The bus hold circuit can sink at least the minimum low sustaining current at V_{IL} max. I_{BHL} should be measured after lowering V_{IN} to GND and then raising it to V_{IL} max.
§ The bus hold circuit can source at least the minimum high sustaining current at V_{IH} min. I_{BHH} should be measured after raising V_{IN} to V_{CC} and then lowering it to V_{IH} min.
¶ An external driver must source at least I_{BHLO} to switch this node from low to high.
# An external driver must sink at least I_{BHHO} to switch this node from high to low.
‖ This is the increase in supply current for each input that is at the specified TTL voltage level rather than V_{CC} or GND.
☆ Measured by the voltage drop between the A and B terminals at the indicated current through the switch. On-state resistance is determined by the lowest voltage of the two (A or B) terminals.

switching characteristics over recommended operating free-air temperature range, C_L = 50 pF (unless otherwise noted) (see Figure 1)

PARAMETER	FROM (INPUT)	TO (OUTPUT)	V_{CC} = 4 V		V_{CC} = 5 V ± 0.5 V		UNIT
			MIN	MAX	MIN	MAX	
t_{pd}□	A or B	B or A		0.35		0.25	ns
t_{pd}	BX	A or B		10.2	1	9.2	ns
t_{en}	$\overline{BE}$	A or B		9.6	1	8.6	ns
t_{dis}	$\overline{BE}$	A or B		8.5	1	7.5	ns

□ The propagation delay is the calculated RC time constant of the typical on-state resistance of the switch and the specified load capacitance, when driven by an ideal voltage source (zero output impedance).

PRODUCT PREVIEW

PARAMETER MEASUREMENT INFORMATION

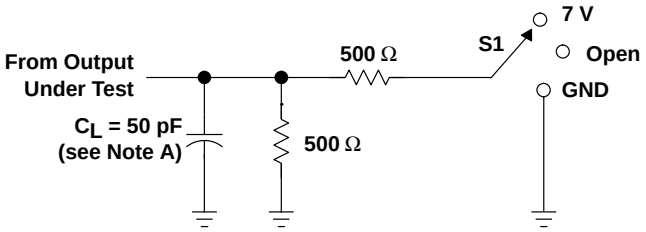

LOAD CIRCUIT

TEST	S1
t_{pd}	Open
t_{PLZ}/t_{PZL}	7 V
t_{PHZ}/t_{PZH}	Open

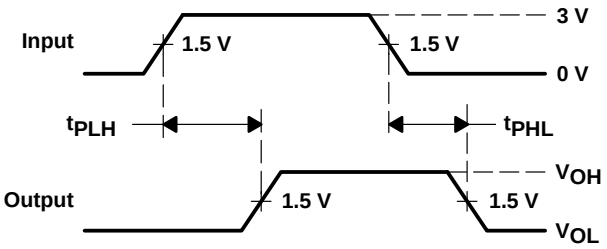

VOLTAGE WAVEFORMS
PROPAGATION DELAY TIMES

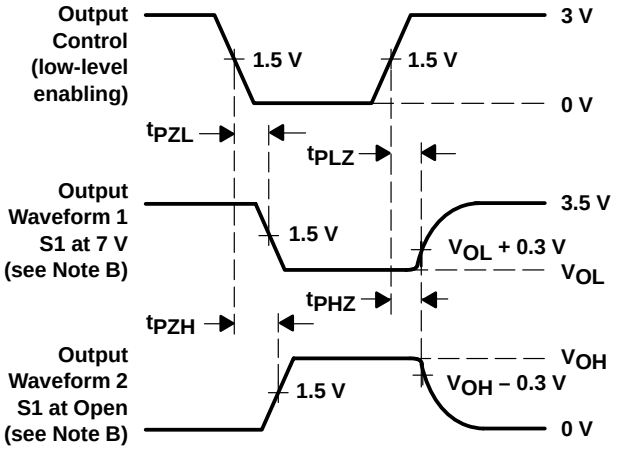

VOLTAGE WAVEFORMS
ENABLE AND DISABLE TIMES

NOTES:
A. C_L includes probe and jig capacitance.
B. Waveform 1 is for an output with internal conditions such that the output is low except when disabled by the output control. Waveform 2 is for an output with internal conditions such that the output is high except when disabled by the output control.
C. All input pulses are supplied by generators having the following characteristics: PRR ≤ 10 MHz, Z_O = 50 Ω, t_r ≤ 2.5 ns, t_f ≤ 2.5 ns.
D. The outputs are measured one at a time with one transition per measurement.
E. t_{PLZ} and t_{PHZ} are the same as t_{dis}.
F. t_{PZL} and t_{PZH} are the same as t_{en}.
G. t_{PLH} and t_{PHL} are the same as t_{pd}.

Figure 1. Load Circuit and Voltage Waveforms

PRODUCT PREVIEW

- **Functionally Equivalent to QS3383 and QS3L383**
- **25-Ω Switch Connection Between Two Ports**
- **TTL-Compatible Input Levels**
- **Package Options Include Plastic Small-Outline (DW), Shrink Small-Outline (DB, DBQ), and Thin Shrink Small-Outline (PW) Packages**

DB, DBQ, DW, OR PW PACKAGE
(TOP VIEW)

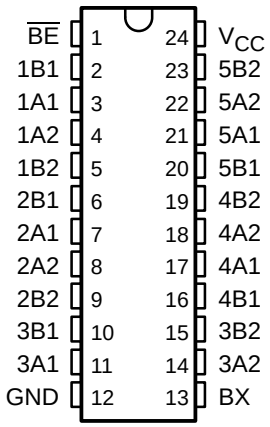

description

The SN74CBTR3383 device provides ten bits of high-speed TTL-compatible bus switching or exchanging. The low on-state resistance of the switch allows connections to be made with minimal propagation delay.

The device operates as a 10-bit bus switch or a 5-bit bus exchanger, which provides swapping of the A and B pairs of signals. The bus-exchange function is selected when BX is high. The switch is connected when $\overline{BE}$ is low.

The device has equivalent 25-Ω series resistors to reduce signal-reflection noise. This eliminates the need for external terminating resistors.

The SN74CBTR3383 is characterized for operation from 0°C to 70°C.

FUNCTION TABLE

INPUTS		INPUTS/OUTPUTS	
$\overline{BE}$	BX	1A1–5A1	1A2–5A2
L	L	1B1–5B1	1B2–5B2
L	H	1B2–5B2	1B1–5B1
H	X	Z	Z

PRODUCT PREVIEW

PRODUCT PREVIEW information concerns products in the formative or design phase of development. Characteristic data and other specifications are design goals. Texas Instruments reserves the right to change or discontinue these products without notice.

Copyright © 1998, Texas Instruments Incorporated

PRODUCT PREVIEW

logic diagram (positive logic)

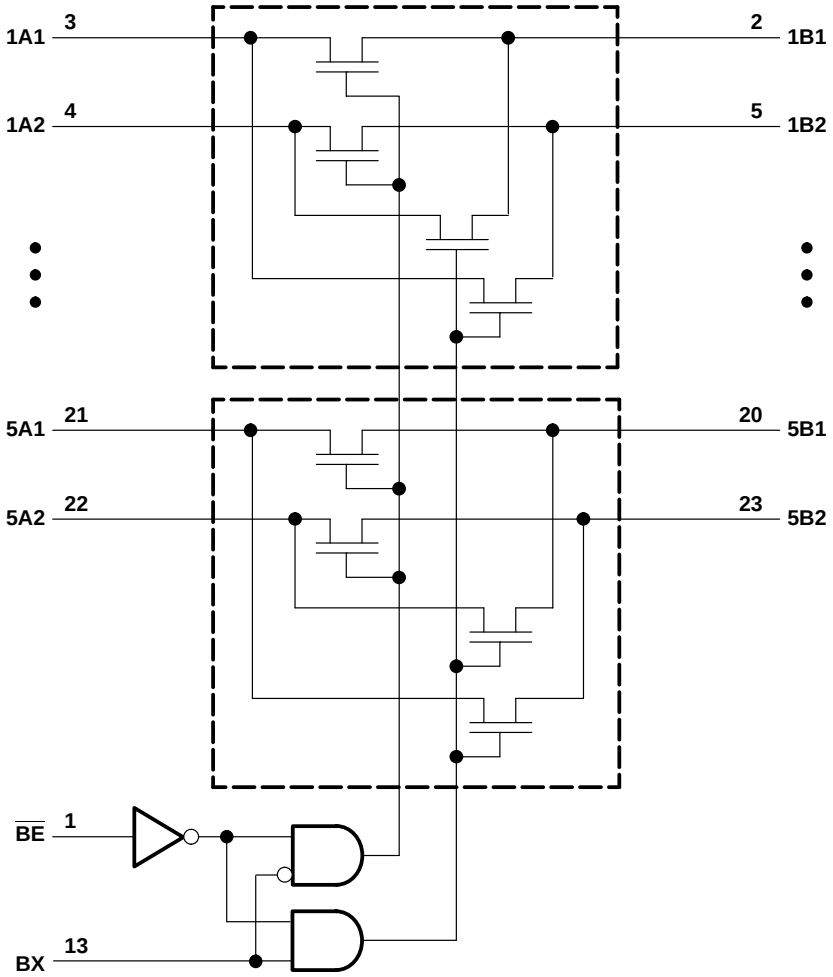

absolute maximum ratings over operating free-air temperature range (unless otherwise noted)†

Supply voltage range, V_{CC}		–0.5 V to 7 V
Input voltage range, V_I (see Note 1)		–0.5 V to 7 V
Continuous channel current		128 mA
Input clamp current, I_{IK} ($V_{I/O} < 0$)		–50 mA
Package thermal impedance, θ_{JA} (see Note 2):	DB package	104°C/W
	DBQ package	113°C/W
	DW package	81°C/W
	PW package	120°C/W
Storage temperature range, T_{stg}		–65°C to 150°C

† Stresses beyond those listed under “absolute maximum ratings” may cause permanent damage to the device. These are stress ratings only, and functional operation of the device at these or any other conditions beyond those indicated under “recommended operating conditions” is not implied. Exposure to absolute-maximum-rated conditions for extended periods may affect device reliability.

NOTES: 1. The input and output negative-voltage ratings may be exceeded if the input and output clamp-current ratings are observed.
2. The package thermal impedance is calculated in accordance with JESD 51.

recommended operating conditions (see Note 3)

		MIN	MAX	UNIT
V_{CC}	Supply voltage	4.5	5.5	V
V_{IH}	High-level control input voltage	2		V
V_{IL}	Low-level control input voltage		0.8	V
T_A	Operating free-air temperature	0	70	°C

NOTE 3: All unused control inputs of the device must be held at V_{CC} or GND to ensure proper device operation. Refer to the TI application report, *Implications of Slow or Floating CMOS Inputs*, literature number SCBA004.

electrical characteristics over recommended operating free-air temperature range (unless otherwise noted)

PARAMETER		TEST CONDITIONS			MIN	TYP†	MAX	UNIT
V_{IK}		V_{CC} = 4.5 V,	I_I = –18 mA				–1.2	V
I_I		V_{CC} = 5.5 V,	V_I = 5.5 V or GND				±1	µA
I_{CC}		V_{CC} = 5.5 V,	I_O = 0,	V_I = V_{CC} or GND			50	µA
ΔI_{CC}‡	Control inputs	V_{CC} = 5.5 V,	One input at 3.4 V,	Other inputs at V_{CC} or GND			2.5	mA
C_i	Control inputs	V_I = 3 V or 0						pF
$C_{io(OFF)}$		V_O = 3 V or 0,	$\overline{BE}$ = V_{CC}					pF
r_{on}§		V_{CC} = 4.5 V	V_I = 0	I_I = 64 mA				Ω
				I_I = 30 mA				
			V_I = 2.4 V,	I_I = 15 mA				

† All typical values are at V_{CC} = 5 V, T_A = 25°C.
‡ This is the increase in supply current for each input that is at the specified TTL voltage level rather than V_{CC} or GND.
§ Measured by the voltage drop between the input terminal and the output terminal at the indicated current through the switch. On-state resistance is determined by the lowest voltage of the two (A or B) terminals.

switching characteristics over recommended operating free-air temperature range, C_L = 50 pF (unless otherwise noted) (see Figure 1)

PARAMETER	FROM (INPUT)	TO (OUTPUT)	MIN	MAX	UNIT
t_{pd}¶	A or B	B or A			ns
t_{pd}	BX	A or B			ns
t_{en}	$\overline{BE}$	A or B			ns
t_{dis}	$\overline{BE}$	A or B			ns

¶ The propagation delay is the calculated RC time constant of the typical on-state resistance of the switch and the specified load capacitance, when driven by an ideal voltage source (zero output impedance).

PRODUCT PREVIEW

PARAMETER MEASUREMENT INFORMATION

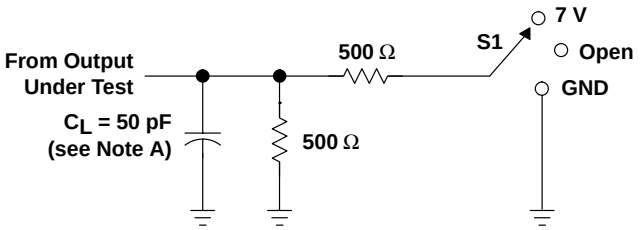

LOAD CIRCUIT

TEST	S1
t_{pd}	Open
t_{PLZ}/t_{PZL}	7 V
t_{PHZ}/t_{PZH}	Open

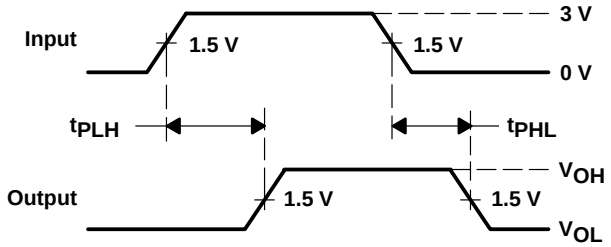

VOLTAGE WAVEFORMS
PROPAGATION DELAY TIMES

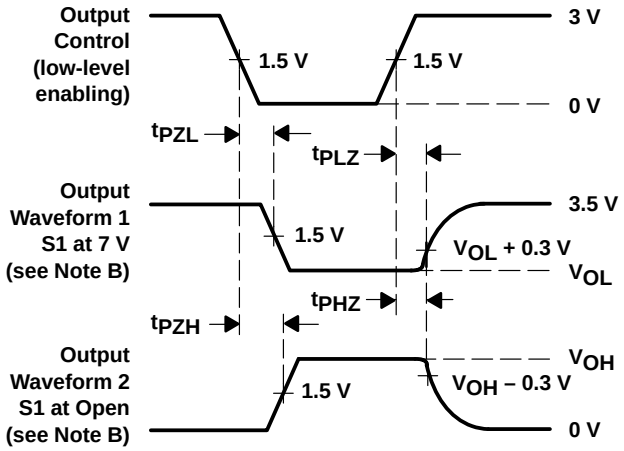

VOLTAGE WAVEFORMS
ENABLE AND DISABLE TIMES

NOTES:
A. C_L includes probe and jig capacitance.
B. Waveform 1 is for an output with internal conditions such that the output is low except when disabled by the output control. Waveform 2 is for an output with internal conditions such that the output is high except when disabled by the output control.
C. All input pulses are supplied by generators having the following characteristics: PRR ≤ 10 MHz, Z_O = 50 Ω, t_r ≤ 2.5 ns, t_f ≤ 2.5 ns.
D. The outputs are measured one at a time with one transition per measurement.
E. t_{PLZ} and t_{PHZ} are the same as t_{dis}.
F. t_{PZL} and t_{PZH} are the same as t_{en}.
G. t_{PLH} and t_{PHL} are the same as t_{pd}.

Figure 1. Load Circuit and Voltage Waveforms

PRODUCT PREVIEW

- **Functionally Equivalent to QS3384 and QS3L384**
- **5-Ω Switch Connection Between Two Ports**
- **TTL-Compatible Input Levels**
- **Package Options Include Plastic Small-Outline (DW), Shrink Small-Outline (DB, DBQ), Thin Very Small-Outline (DGV), and Thin Shrink Small-Outline (PW) Packages**

DB, DBQ, DGV, DW, OR PW PACKAGE
(TOP VIEW)

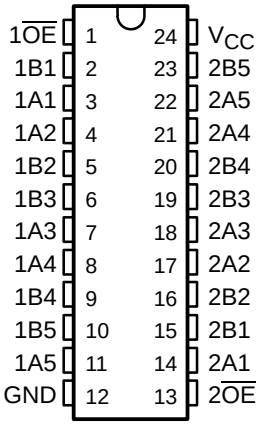

description

The SN74CBT3384A provides ten bits of high-speed TTL-compatible bus switching. The low on-state resistance of the switch allows connections to be made with minimal propagation delay.

The device is organized as two 5-bit switches with separate output-enable ($\overline{OE}$) inputs. When $\overline{OE}$ is low, the switch is on and port A is connected to port B. When $\overline{OE}$ is high, the switch is open and a high-impedance state exists between the two ports.

The SN74CBT3384A is characterized for operation from –40°C to 85°C.

FUNCTION TABLE
(each 5-bit bus switch)

INPUTS		INPUTS/OUTPUTS	
$1\overline{OE}$	$2\overline{OE}$	1B1–1B5	2B1–2B5
L	L	1A1–1A5	2A1–2A5
L	H	1A1–1A5	Z
H	L	Z	2A1–2A5
H	H	Z	Z

logic diagram (positive logic)

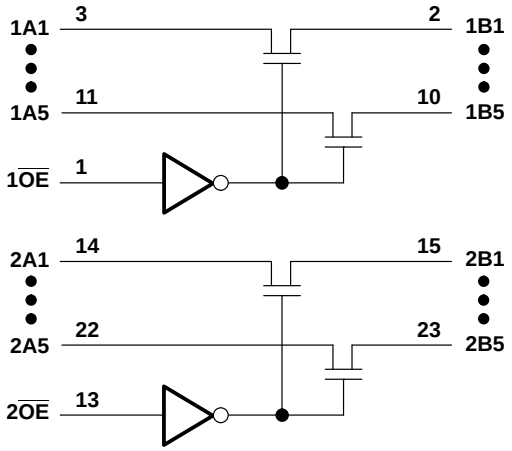

PRODUCTION DATA information is current as of publication date. Products conform to specifications per the terms of Texas Instruments standard warranty. Production processing does not necessarily include testing of all parameters.

Copyright © 1998, Texas Instruments Incorporated

absolute maximum ratings over operating free-air temperature range (unless otherwise noted)†

Supply voltage range, V_{CC} . . . . . –0.5 V to 7 V
Input voltage range, V_I (see Note 1) . . . . . –0.5 V to 7 V
Continuous channel current . . . . . 128 mA
Input clamp current, I_{IK} ($V_{I/O}$ < 0) . . . . . –50 mA
Package thermal impedance, θ_{JA} (see Note 2): DB package . . . . . 104°C/W
DBQ package . . . . . 113°C/W
DGV package . . . . . 139°C/W
DW package . . . . . 81°C/W
PW package . . . . . 120°C/W
Storage temperature range, T_{stg} . . . . . –65°C to 150°C

† Stresses beyond those listed under "absolute maximum ratings" may cause permanent damage to the device. These are stress ratings only, and functional operation of the device at these or any other conditions beyond those indicated under "recommended operating conditions" is not implied. Exposure to absolute-maximum-rated conditions for extended periods may affect device reliability.

NOTES: 1. The input and output negative-voltage ratings may be exceeded if the input and output clamp-current ratings are observed.
2. The package thermal impedance is calculated in accordance with JESD 51.

recommended operating conditions (see Note 3)

		MIN	MAX	UNIT
V_{CC}	Supply voltage	4	5.5	V
V_{IH}	High-level control input voltage	2		V
V_{IL}	Low-level control input voltage		0.8	V
T_A	Operating free-air temperature	–40	85	°C

NOTE 3: All unused control inputs of the device must be held at V_{CC} or GND to ensure proper device operation. Refer to the TI application report, *Implications of Slow or Floating CMOS Inputs*, literature number SCBA004.

electrical characteristics over recommended operating free-air temperature range (unless otherwise noted)

PARAMETER		TEST CONDITIONS			MIN	TYP‡	MAX	UNIT
V_{IK}		V_{CC} = 4.5 V,	I_I = –18 mA				–1.2	V
I_I		V_{CC} = 5.5 V,	V_I = 5.5 V or GND				±1	µA
I_{CC}		V_{CC} = 5.5 V,	I_O = 0,	V_I = V_{CC} or GND			3	µA
ΔI_{CC}§	Control inputs	V_{CC} = 5.5 V,	One input at 3.4 V,	Other inputs at V_{CC} or GND			2.5	mA
C_i	Control inputs	V_I = 3 V or 0				4		pF
$C_{io(OFF)}$		V_O = 3 V or 0,	$\overline{OE}$ = V_{CC}			4.5		pF
r_{on}¶		V_{CC} = 4 V, TYP at V_{CC} = 4 V	V_I = 2.4 V,	I_I = 15 mA		14	20	Ω
		V_{CC} = 4.5 V	V_I = 0	I_I = 64 mA		5	7	Ω
				I_I = 30 mA		5	7	Ω
			V_I = 2.4 V,	I_I = 15 mA		10	15	Ω

‡ All typical values are at V_{CC} = 5 V (unless otherwise noted), T_A = 25°C.
§ This is the increase in supply current for each input that is at the specified TTL voltage level rather than V_{CC} or GND.
¶ Measured by the voltage drop between the A and B terminals at the indicated current through the switch. On-state resistance is determined by the lowest voltage of the two (A or B) terminals.

switching characteristics over recommended operating free-air temperature range, C_L = 50 pF (unless otherwise noted) (see Figure 1)

PARAMETER	FROM (INPUT)	TO (OUTPUT)	V_{CC} = 4 V		V_{CC} = 5 V ± 0.5 V		UNIT
			MIN	MAX	MIN	MAX	
t_{pd}†	A or B	B or A		0.35		0.25	ns
t_{en}	$\overline{OE}$	A or B		6.2	1.9	5.7	ns
t_{dis}	$\overline{OE}$	A or B		5.5	2.1	5.2	ns

† The propagation delay is the calculated RC time constant of the typical on-state resistance of the switch and the specified load capacitance, when driven by an ideal voltage source (zero output impedance).

PARAMETER MEASUREMENT INFORMATION

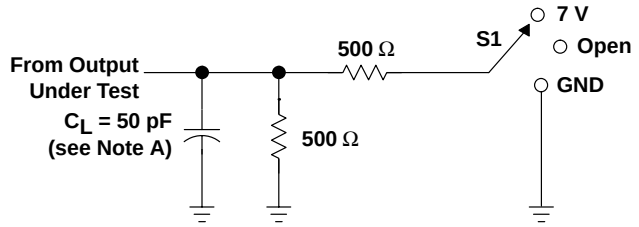

LOAD CIRCUIT

TEST	S1
t_{pd}	Open
t_{PLZ}/t_{PZL}	7 V
t_{PHZ}/t_{PZH}	Open

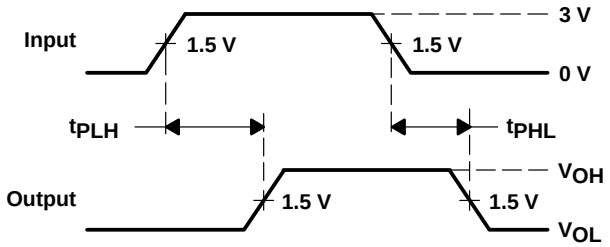

VOLTAGE WAVEFORMS
PROPAGATION DELAY TIMES

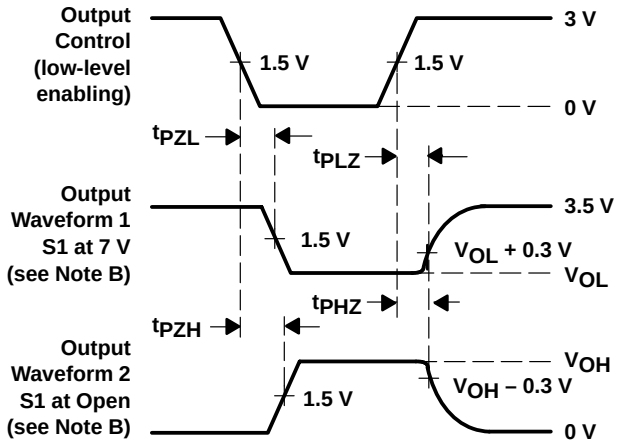

VOLTAGE WAVEFORMS
ENABLE AND DISABLE TIMES

NOTES: A. C_L includes probe and jig capacitance.
B. Waveform 1 is for an output with internal conditions such that the output is low except when disabled by the output control. Waveform 2 is for an output with internal conditions such that the output is high except when disabled by the output control.
C. All input pulses are supplied by generators having the following characteristics: PRR ≤ 10 MHz, Z_O = 50 Ω, t_r ≤ 2.5 ns, t_f ≤ 2.5 ns.
D. The outputs are measured one at a time with one transition per measurement.
E. t_{PLZ} and t_{PHZ} are the same as t_{dis}.
F. t_{PZL} and t_{PZH} are the same as t_{en}.
G. t_{PLH} and t_{PHL} are the same as t_{pd}.

Figure 1. Load Circuit and Voltage Waveforms

- **Functionally Equivalent to QS3384 and QS3L384**
- **25-Ω Switch Connection Between Two Ports**
- **TTL-Compatible Input Levels**
- **Package Options Include Plastic Small-Outline (DW), Shrink Small-Outline (DB, DBQ), Thin Very Small-Outline (DGV), and Thin Shrink Small-Outline (PW) Packages**

DB, DBQ, DGV, DW, OR PW PACKAGE
(TOP VIEW)

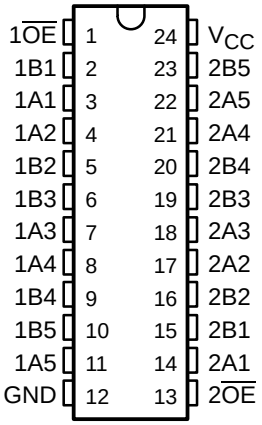

description

The SN74CBTR3384 provides ten bits of high-speed TTL-compatible bus switching. The low on-state resistance of the switch allows connections to be made with minimal propagation delay.

The device is organized as two 5-bit switches with separate output-enable ($\overline{OE}$) inputs. When $\overline{OE}$ is low, the switch is on and port A is connected to port B. When $\overline{OE}$ is high, the switch is open and a high-impedance state exists between the two ports.

The device has equivalent 25-Ω series resistors to reduce signal-reflection noise. This eliminates the need for external terminating resistors.

The SN74CBTR3384 is characterized for operation from –40°C to 85°C.

FUNCTION TABLE
(each 5-bit bus switch)

INPUTS		INPUTS/OUTPUTS	
$1\overline{OE}$	$2\overline{OE}$	1B1–1B5	2B1–2B5
L	L	1A1–1A5	2A1–2A5
L	H	1A1–1A5	Z
H	L	Z	2A1–2A5
H	H	Z	Z

PRODUCT PREVIEW

PRODUCT PREVIEW information concerns products in the formative or design phase of development. Characteristic data and other specifications are design goals. Texas Instruments reserves the right to change or discontinue these products without notice.

Copyright © 1998, Texas Instruments Incorporated

PRODUCT PREVIEW

logic diagram (positive logic)

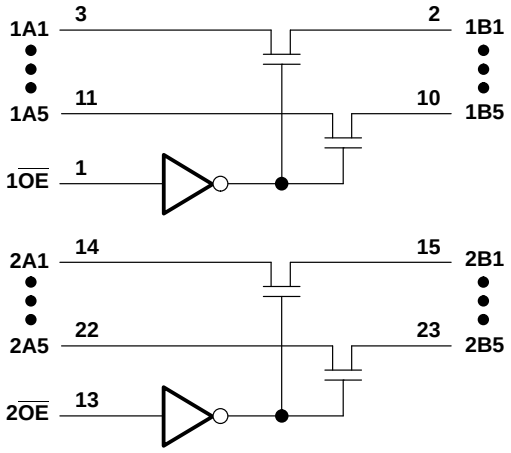

absolute maximum ratings over operating free-air temperature range (unless otherwise noted)†

Supply voltage range, V_{CC}	–0.5 V to 7 V
Input voltage range, V_I (see Note 1)	–0.5 V to 7 V
Continuous channel current	128 mA
Input clamp current, I_{IK} ($V_{I/O} < 0$)	–50 mA
Package thermal impedance, θ_{JA} (see Note 2): DB package	104°C/W
DBQ package	113°C/W
DGV package	139°C/W
DW package	81°C/W
PW package	120°C/W
Storage temperature range, T_{stg}	–65°C to 150°C

† Stresses beyond those listed under “absolute maximum ratings” may cause permanent damage to the device. These are stress ratings only, and functional operation of the device at these or any other conditions beyond those indicated under “recommended operating conditions” is not implied. Exposure to absolute-maximum-rated conditions for extended periods may affect device reliability.

NOTES: 1. The input and output negative-voltage ratings may be exceeded if the input and output clamp-current ratings are observed.
2. The package thermal impedance is calculated in accordance with JESD 51.

recommended operating conditions (see Note 3)

		MIN	MAX	UNIT
V_{CC}	Supply voltage	4.5	5.5	V
V_{IH}	High-level control input voltage	2		V
V_{IL}	Low-level control input voltage		0.8	V
T_A	Operating free-air temperature	–40	85	°C

NOTE 3: All unused control inputs of the device must be held at V_{CC} or GND to ensure proper device operation. Refer to the TI application report, *Implications of Slow or Floating CMOS Inputs*, literature number SCBA004.

electrical characteristics over recommended operating free-air temperature range (unless otherwise noted)

PARAMETER		TEST CONDITIONS			MIN	TYP†	MAX	UNIT
V_{IK}		V_{CC} = 4.5 V,	I_I = –18 mA				–1.2	V
I_I		V_{CC} = 5.5 V,	V_I = 5.5 V or GND				±1	µA
I_{CC}		V_{CC} = 5.5 V,	I_O = 0,	V_I = V_{CC} or GND			3	µA
ΔI_{CC}‡	Control inputs	V_{CC} = 5.5 V,	One input at 3.4 V,	Other inputs at V_{CC} or GND			2.5	mA
C_i	Control inputs	V_I = 3 V or 0						pF
$C_{io(OFF)}$		V_O = 3 V or 0,	$\overline{OE}$ = V_{CC}					pF
r_{on}§		V_{CC} = 4.5 V	V_I = 0	I_I = 64 mA				Ω
				I_I = 30 mA				
			V_I = 2.4 V,	I_I = 15 mA				

† All typical values are at V_{CC} = 5 V (unless otherwise noted), T_A = 25°C.
‡ This is the increase in supply current for each input that is at the specified TTL voltage level rather than V_{CC} or GND.
§ Measured by the voltage drop between the A and B terminals at the indicated current through the switch. On-state resistance is determined by the lowest voltage of the two (A or B) terminals.

switching characteristics over recommended operating free-air temperature range, C_L = 50 pF (unless otherwise noted) (see Figure 1)

PARAMETER	FROM (INPUT)	TO (OUTPUT)	MIN	MAX	UNIT
t_{pd}¶	A or B	B or A			ns
t_{en}	$\overline{OE}$	A or B			ns
t_{dis}	$\overline{OE}$	A or B			ns

¶ The propagation delay is the calculated RC time constant of the typical on-state resistance of the switch and the specified load capacitance, when driven by an ideal voltage source (zero output impedance).

PRODUCT PREVIEW

PARAMETER MEASUREMENT INFORMATION

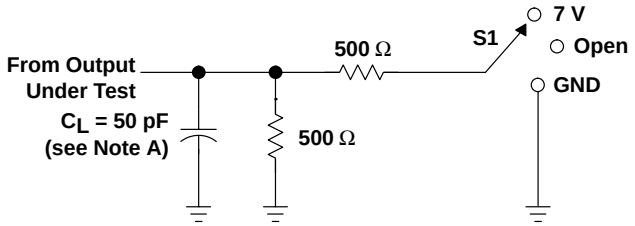

LOAD CIRCUIT

TEST	S1
t_{pd}	Open
t_{PLZ}/t_{PZL}	7 V
t_{PHZ}/t_{PZH}	Open

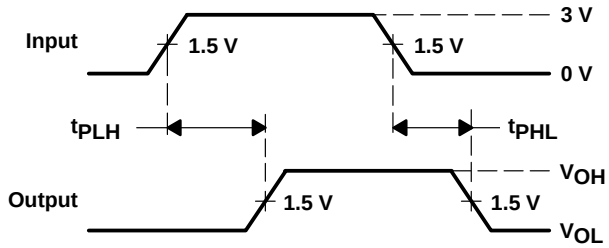

VOLTAGE WAVEFORMS
PROPAGATION DELAY TIMES

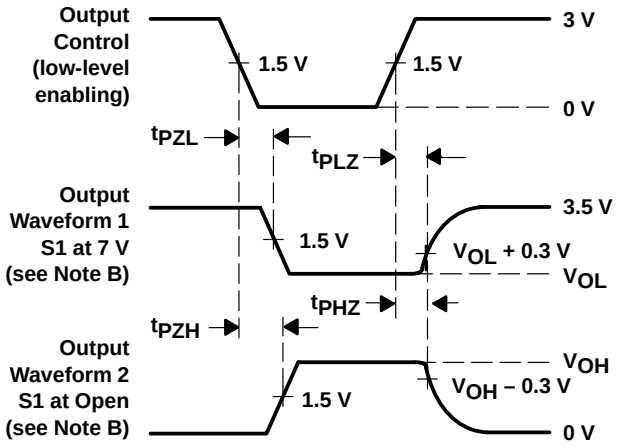

VOLTAGE WAVEFORMS
ENABLE AND DISABLE TIMES

NOTES: A. C_L includes probe and jig capacitance.
B. Waveform 1 is for an output with internal conditions such that the output is low except when disabled by the output control. Waveform 2 is for an output with internal conditions such that the output is high except when disabled by the output control.
C. All input pulses are supplied by generators having the following characteristics: PRR ≤ 10 MHz, Z_O = 50 Ω, t_r ≤ 2.5 ns, t_f ≤ 2.5 ns.
D. The outputs are measured one at a time with one transition per measurement.
E. t_{PLZ} and t_{PHZ} are the same as t_{dis}.
F. t_{PZL} and t_{PZH} are the same as t_{en}.
G. t_{PLH} and t_{PHL} are the same as t_{pd}.

Figure 1. Load Circuit and Voltage Waveforms

PRODUCT PREVIEW

- **Functionally Equivalent to QS3386**
- **5-Ω Switch Connection Between Two Ports**
- **TTL-Compatible Input Levels**
- **Uses V_{CC} of 5 V and V_{DD} of –2 V**
- **Package Options Include Plastic Shrink Small-Outline (DB), Small-Outline (DW), and Thin Shrink Small-Outline (PW) Packages**

DB, DW, OR PW PACKAGE
(TOP VIEW)

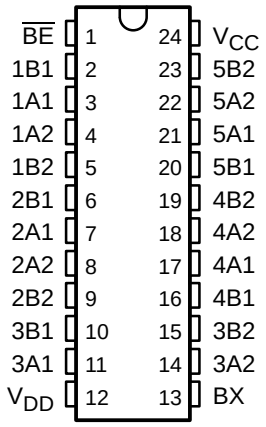

description

The SN74CBT3386 provides ten bits of high-speed TTL-compatible bus switching or exchanging. The input signals can range from –2 V to 5 V. The low on-state resistance of the switch allows connections to be made with minimal propagation delay.

The device operates as a 10-bit bus switch or a 5-bit bus exchanger, which allows swapping of the A and B pairs of signals. The bus-exchange function is selected when BX is high. The switches are disconnected when $\overline{BE}$ is high.

The SN74CBT3386 is characterized for operation from –40°C to 85°C.

FUNCTION TABLE

INPUTS		INPUTS/OUTPUTS	
$\overline{BE}$	BX	1A1–5A1	1A2–5A2
L	L	1B1–5B1	1B2–5B2
L	H	1B2–5B2	1B1–5B1
H	X	Z	Z

PRODUCT PREVIEW

PRODUCT PREVIEW information concerns products in the formative or design phase of development. Characteristic data and other specifications are design goals. Texas Instruments reserves the right to change or discontinue these products without notice.

Copyright © 1998, Texas Instruments Incorporated

PRODUCT PREVIEW

logic diagram (positive logic)

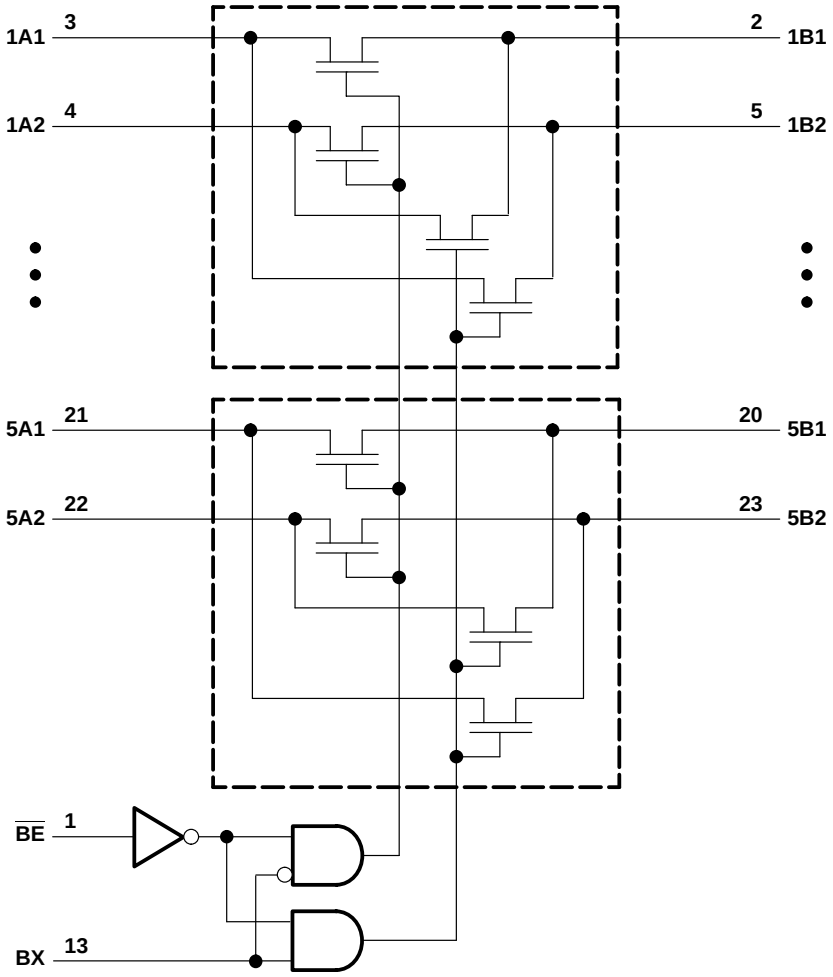

absolute maximum ratings over operating free-air temperature range (unless otherwise noted)†

Supply voltage range, V_{CC} to V_{DD}		–0.5 V to 7 V
Supply voltage range, V_{DD}		–2.5 V to 7 V
Input voltage range, V_I (see Note 1)		V_{DD} – 0.5 V to V_{DD} + 7.5 V
Continuous channel current		128 mA
Input clamp current, I_{IK} ($V_{I/O}$ < 0)		–50 mA
Package thermal impedance, θ_{JA} (see Note 2):	DB package	104°C/W
	DW package	81°C/W
	PW package	120°C/W
Storage temperature range, T_{stg}		–65°C to 150°C

† Stresses beyond those listed under “absolute maximum ratings” may cause permanent damage to the device. These are stress ratings only, and functional operation of the device at these or any other conditions beyond those indicated under “recommended operating conditions” is not implied. Exposure to absolute-maximum-rated conditions for extended periods may affect device reliability.

NOTES: 1. The input and output negative-voltage ratings may be exceeded if the input and output clamp-current ratings are observed.
2. The package thermal impedance is calculated in accordance with JESD 51.

recommended operating conditions (see Note 3)

		MIN	MAX	UNIT
V_{CC}	Supply voltage	4	5.5	V
V_{IH}	High-level control input voltage	2		V
V_{IL}	Low-level control input voltage		0.8	V
T_A	Operating free-air temperature	–40	85	°C

NOTE 3: All unused control inputs of the device must be held at V_{CC} or GND to ensure proper device operation. Refer to the TI application report, *Implications of Slow or Floating CMOS Inputs*, literature number SCBA004.

electrical characteristics over recommended operating free-air temperature range (unless otherwise noted)

PARAMETER		TEST CONDITIONS			MIN	TYP†	MAX	UNIT
V_{IK}		V_{CC} = 4.5 V,	I_I = –18 mA				V_{DD}–1.2	V
I_I		V_{CC} = 5.5 V,	V_I = 5.5 V or GND				±1	µA
I_{CC}		V_{CC} = 5.5 V,	I_O = 0,	V_I = V_{CC} or GND			3	µA
ΔI_{CC}‡	Control inputs	V_{CC} = 5.5 V,	One input at 3.4 V,	Other inputs at V_{CC} or GND			5	mA
C_i	Control inputs	V_I = 3 V or 0						pF
$C_{io(OFF)}$		V_O = 3 V or 0,	$\overline{BE}$ = V_{CC}					pF
r_{on}§		V_{CC} = 4 V, TYP at V_{CC} = 4 V	V_I = 2.4,	I_I = 15 mA				Ω
		V_{CC} = 4.5 V	V_I = 0	I_I = 64 mA				Ω
				I_I = 30 mA				Ω
			V_I = 2.4 V,	I_I = 15 mA				Ω

† All typical values are at V_{CC} = 5 V (unless otherwise noted), T_A = 25°C.
‡ This is the increase in supply current for each input that is at the specified TTL voltage level rather than V_{CC} or GND.
§ Measured by the voltage drop between the input terminal and the output terminal at the indicated current through the switch. On-state resistance is determined by the lower of the voltages of the two terminals.

switching characteristics over recommended operating free-air temperature range, C_L = 50 pF (unless otherwise noted) (see Figure 1)

PARAMETER	FROM (INPUT)	TO (OUTPUT)	V_{CC} = 4 V		V_{CC} = 5 V ± 0.5 V		UNIT
			MIN	MAX	MIN	MAX	
t_{pd}¶	A or B	B or A					ns
t_{en}	BX	A or B					ns
	$\overline{BE}$						
t_{dis}	$\overline{BE}$	A or B					ns

¶ The propagation delay is the calculated RC time constant of the typical on-state resistance of the switch and the specified load capacitance, when driven by an ideal voltage source (zero output impedance).

PRODUCT PREVIEW

PARAMETER MEASUREMENT INFORMATION

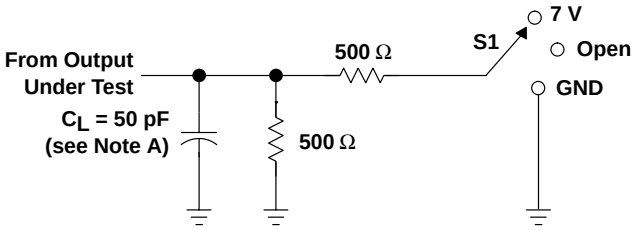

LOAD CIRCUIT

TEST	S1
t_{pd}	Open
t_{PLZ}/t_{PZL}	7 V
t_{PHZ}/t_{PZH}	Open

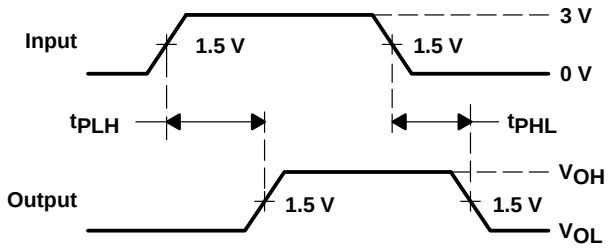

VOLTAGE WAVEFORMS
PROPAGATION DELAY TIMES

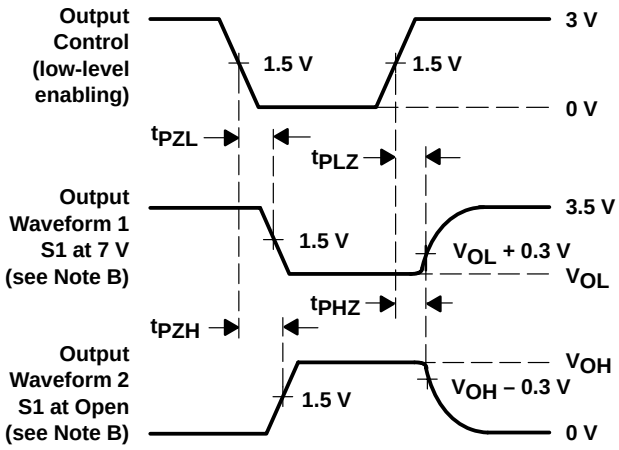

VOLTAGE WAVEFORMS
ENABLE AND DISABLE TIMES

NOTES: A. C_L includes probe and jig capacitance.
B. Waveform 1 is for an output with internal conditions such that the output is low except when disabled by the output control. Waveform 2 is for an output with internal conditions such that the output is high except when disabled by the output control.
C. All input pulses are supplied by generators having the following characteristics: PRR ≤ 10 MHz, Z_O = 50 Ω, t_r ≤ 2.5 ns, t_f ≤ 2.5 ns.
D. The outputs are measured one at a time with one transition per measurement.
E. t_{PLZ} and t_{PHZ} are the same as t_{dis}.
F. t_{PZL} and t_{PZH} are the same as t_{en}.
G. t_{PLH} and t_{PHL} are the same as t_{pd}.

Figure 1. Load Circuit and Voltage Waveforms

PRODUCT PREVIEW

- **5-Ω Switch Connection Between Two Ports**
- **TTL-Compatible Input Levels**
- **Package Options Include Plastic Shrink Small-Outline (DL) and Small-Outline (DW) Packages**

DL OR DW PACKAGE
(TOP VIEW)

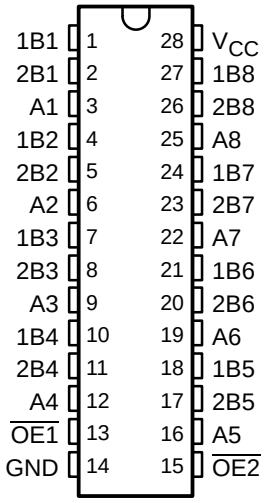

description

The SN74CBT3390 is an 8-bit to 16-bit switch used in applications in which two separate data paths must be multiplexed onto, or demultiplexed from, a single path. This device can be used for memory interleaving, in which two different banks of memory must be addressed simultaneously. This also can be used to connect or isolate the PCI bus to one or two slots simultaneously.

Two output enables ($\overline{OE1}$ and $\overline{OE2}$) control the data flow. When $\overline{OE1}$ is low, A port is connected to 1B port. When $\overline{OE2}$ is low, A port is connected to 2B port. When both $\overline{OE1}$ and $\overline{OE2}$ are low, the A port is connected to both 1B and 2B ports. The control inputs can be driven with a 5-V CMOS, 5-V TTL, or an LVTTL driver.

The SN74CBT3390 is characterized for operation from –40°C to 85°C.

FUNCTION TABLE

INPUTS		FUNCTION
$\overline{OE1}$	$\overline{OE2}$	
L	L	A = 1B and A = 2B
L	H	A = 1B
H	L	A = 2B
H	H	Isolation

PRODUCT PREVIEW

PRODUCT PREVIEW information concerns products in the formative or design phase of development. Characteristic data and other specifications are design goals. Texas Instruments reserves the right to change or discontinue these products without notice.

Copyright © 1998, Texas Instruments Incorporated

PRODUCT PREVIEW

logic diagram (positive logic)

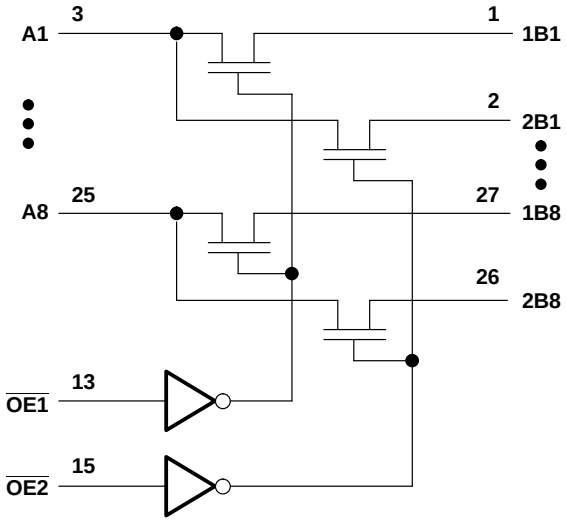

absolute maximum ratings over operating free-air temperature range (unless otherwise noted)†

Supply voltage range, V_{CC} . . . . . –0.5 V to 7 V
Input voltage range, V_I (see Note 1) . . . . . –0.5 V to V_{CC} + 0.5 V
Continuous channel current . . . . . 128 mA
Input clamp current, I_{IK} (V_I < 0) . . . . . –50 mA
Package thermal impedance, θ_{JA} (see Note 2): DL package . . . . . 97°C/W
DW package . . . . . 78°C/W
Storage temperature range, T_{stg} . . . . . –65°C to 150°C

† Stresses beyond those listed under "absolute maximum ratings" may cause permanent damage to the device. These are stress ratings only, and functional operation of the device at these or any other conditions beyond those indicated under "recommended operating conditions" is not implied. Exposure to absolute-maximum-rated conditions for extended periods may affect device reliability.

NOTES: 1. The input and output negative-voltage ratings may be exceeded if the input and output clamp-current ratings are observed.
2. The package thermal impedance is calculated in accordance with JESD 51.

recommended operating conditions (see Note 3)

		MIN	MAX	UNIT
V_{CC}	Supply voltage	4.5	5.5	V
V_{IH}	High-level control input voltage	2		V
V_{IL}	Low-level control input voltage		0.8	V
T_A	Operating free-air temperature	–40	85	°C

NOTE 3: All unused control inputs of the device must be held at V_{CC} or GND to ensure proper device operation. Refer to the TI application report, *Implications of Slow or Floating CMOS Inputs*, literature number SCBA004.

electrical characteristics over recommended operating free-air temperature range (unless otherwise noted)

PARAMETER		TEST CONDITIONS			MIN	TYP†	MAX	UNIT
V_{IK}		V_{CC} = 4.5 V,	I_I = –18 mA				–1.2	V
I_I		V_{CC} = 0	V_I = 5.5 V				10	µA
		V_{CC} = 5.5 V,	V_I = 5.5 V or GND				±1	
I_{CC}		V_{CC} = 5.5 V,	I_O = 0,	V_I = V_{CC} or GND			3	µA
ΔI_{CC}‡	Control inputs	V_{CC} = 5.5 V,	One input at 3.4 V,	Other input at V_{CC} or GND			2.5	mA
C_i	Control inputs	V_I = 3 V or 0						pF
$C_{io(OFF)}$		V_O = 3 V or 0						pF
r_{on}§		V_{CC} = 4.5 V	V_I = 0	I_I = 64 mA				Ω
				I_I = 30 mA				
			V_I = 2.4 V,	I_I = 15 mA				

† All typical values are at V_{CC} = 5 V, T_A = 25°C.
‡ This is the increase in supply current for each input that is at the specified TTL voltage level rather than V_{CC} or GND.
§ Measured by the voltage drop between A and B terminals at the indicated current through the switch. On-state resistance is determined by the lower of the voltages of the two (A or B) terminals.

switching characteristics over recommended operating free-air temperature range (unless otherwise noted) (see Figure 1)

PARAMETER	FROM (INPUT)	TO (OUTPUT)	MIN	MAX	UNIT
t_{pd}¶	A or B	B or A			ns
t_{en}	$\overline{OE}$	A or B			ns
t_{dis}	$\overline{OE}$	A or B			ns

¶ The propagation delay is based on the RC time constant of the typical on-state resistance of the switch and a load capacitance of 50 pF, when driven by an ideal voltage source (zero output impedance).

PRODUCT PREVIEW

PARAMETER MEASUREMENT INFORMATION

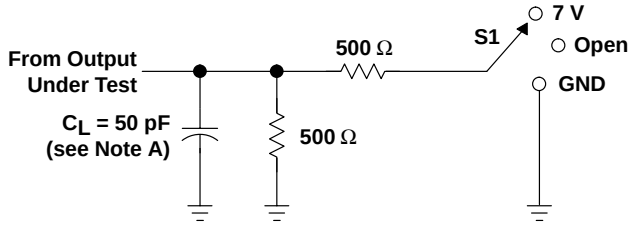

LOAD CIRCUIT

TEST	S1
t_{pd}	Open
t_{PLZ}/t_{PZL}	7 V
t_{PHZ}/t_{PZH}	Open

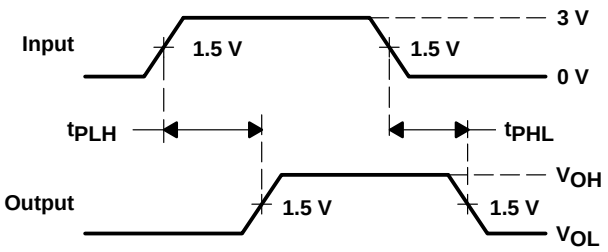

VOLTAGE WAVEFORMS
PROPAGATION DELAY TIMES

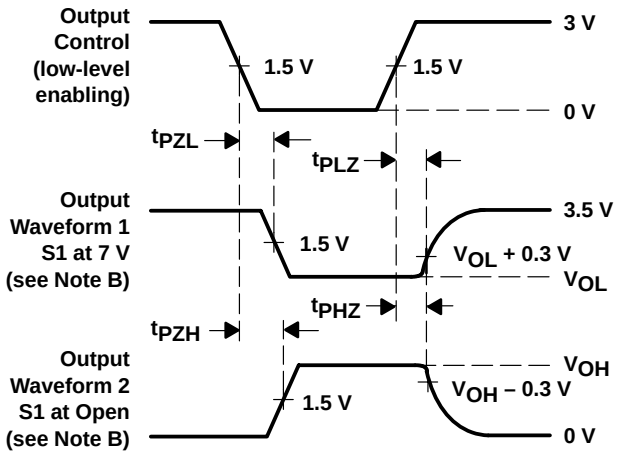

VOLTAGE WAVEFORMS
ENABLE AND DISABLE TIMES

NOTES: A. C_L includes probe and jig capacitance.
B. Waveform 1 is for an output with internal conditions such that the output is low except when disabled by the output control. Waveform 2 is for an output with internal conditions such that the output is high except when disabled by the output control.
C. All input pulses are supplied by generators having the following characteristics: PRR ≤ 10 MHz, Z_O = 50 Ω, t_r ≤ 2.5 ns, t_f ≤ 2.5 ns.
D. The outputs are measured one at a time with one transition per measurement.
E. t_{PLZ} and t_{PHZ} are the same as t_{dis}.
F. t_{PZL} and t_{PZH} are the same as t_{en}.
G. t_{PLH} and t_{PHL} are the same as t_{pd}.

Figure 1. Load Circuit and Voltage Waveforms

PRODUCT PREVIEW

- **5-Ω Switch Connection Between Two Ports**
- **TTL-Compatible Input Levels**
- **Latch-Up Performance Exceeds 250 mA Per JESD 17**
- **Package Options Include Plastic Small-Outline (DW), Shrink Small-Outline (DBQ), and Thin Shrink Small-Outline (PW) Packages**

DBQ, DW, OR PW PACKAGE
(TOP VIEW)

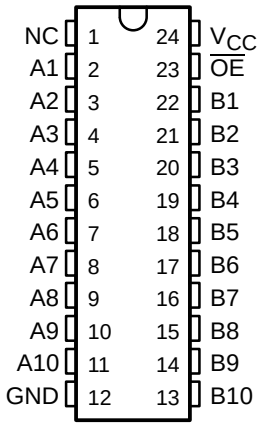

NC – No internal connection

description

The SN74CBT3861 provides ten bits of high-speed TTL-compatible bus switching. The low on-state resistance of the switch allows connections to be made with minimal propagation delay.

The device is organized as one 10-bit switch with a single output-enable ($\overline{OE}$) input. When $\overline{OE}$ is low, the switch is on and port A is connected to port B. When $\overline{OE}$ is high, the switch is open, and a high-impedance state exists between the two ports.

The SN74CBT3861 is characterized for operation from –40°C to 85°C.

FUNCTION TABLE

INPUT $\overline{OE}$	FUNCTION
L	A port = B port
H	Disconnect

logic diagram (positive logic)

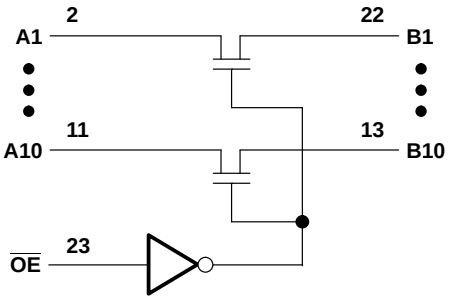

PRODUCTION DATA information is current as of publication date. Products conform to specifications per the terms of Texas Instruments standard warranty. Production processing does not necessarily include testing of all parameters.

Copyright © 1998, Texas Instruments Incorporated

absolute maximum ratings over operating free-air temperature range (unless otherwise noted)†

Supply voltage range, V_{CC} . . . . . –0.5 V to 7 V
Input voltage range, V_I (see Note 1) . . . . . –0.5 V to 7 V
Continuous channel current . . . . . 128 mA
Input clamp current, I_{IK} ($V_{I/O}$ < 0) . . . . . –50 mA
Package thermal impedance, θ_{JA} (see Note 2): DBQ package . . . . . 113°C/W
DW package . . . . . 81°C/W
PW package . . . . . 120°C/W
Storage temperature range, T_{stg} . . . . . –65°C to 150°C

† Stresses beyond those listed under "absolute maximum ratings" may cause permanent damage to the device. These are stress ratings only, and functional operation of the device at these or any other conditions beyond those indicated under "recommended operating conditions" is not implied. Exposure to absolute-maximum-rated conditions for extended periods may affect device reliability.

NOTES: 1. The input and output negative-voltage ratings may be exceeded if the input and output clamp-current ratings are observed.
2. The package thermal impedance is calculated in accordance with JESD 51.

recommended operating conditions (see Note 3)

		MIN	MAX	UNIT
V_{CC}	Supply voltage	4	5.5	V
V_{IH}	High-level control input voltage	2		V
V_{IL}	Low-level control input voltage		0.8	V
T_A	Operating free-air temperature	–40	85	°C

NOTE 3: All unused control inputs of the device must be held at V_{CC} or GND to ensure proper device operation. Refer to the TI application report, *Implications of Slow or Floating CMOS Inputs*, literature number SCBA004.

electrical characteristics over recommended operating free-air temperature range (unless otherwise noted)

PARAMETER		TEST CONDITIONS			MIN	TYP‡	MAX	UNIT
V_{IK}		V_{CC} = 4.5 V,	I_I = –18 mA				–1.2	V
I_I		V_{CC} = 5.5 V,	V_I = 5.5 V or GND				±1	µA
I_{CC}		V_{CC} = 5.5 V,	I_O = 0,	V_I = V_{CC} or GND			3	µA
ΔI_{CC}§	Control inputs	V_{CC} = 5.5 V,	One input at 3.4 V,	Other inputs at V_{CC} or GND			2.5	mA
C_i	Control inputs	V_I = 3 V or 0				3		pF
$C_{io(OFF)}$		V_O = 3 V or 0,	$\overline{OE}$ = V_{CC}			5		pF
r_{on}¶		V_{CC} = 4 V, TYP at V_{CC} = 4 V	V_I = 2.4 V,	I_I = 15 mA		14	22	Ω
		V_{CC} = 4.5 V	V_I = 0	I_I = 64 mA		5	7	
				I_I = 30 mA		5	7	
			V_I = 2.4 V,	I_I = 15 mA		10	15	

‡ All typical values are at V_{CC} = 5 V (unless otherwise noted), T_A = 25°C.
§ This is the increase in supply current for each input that is at the specified TTL voltage level rather than V_{CC} or GND.
¶ Measured by the voltage drop between the A and B terminals at the indicated current through the switch. On-state resistance is determined by the lowest voltage of the two (A or B) terminals.

switching characteristics over recommended operating free-air temperature range (unless otherwise noted) (see Figure 1)

PARAMETER	FROM (INPUT)	TO (OUTPUT)	V_{CC} = 4 V		V_{CC} = 5 V ± 0.5 V		UNIT
			MIN	MAX	MIN	MAX	
t_{pd}†	A or B	B or A		0.35		0.25	ns
t_{en}	$\overline{OE}$	A or B		8.1	3.8	7.5	ns
t_{dis}	$\overline{OE}$	A or B		6.3	3.4	6.6	ns

† The propagation delay is the calculated RC time constant of the typical on-state resistance of the switch and the specified load capacitance, when driven by an ideal voltage source (zero output impedance).

PARAMETER MEASUREMENT INFORMATION

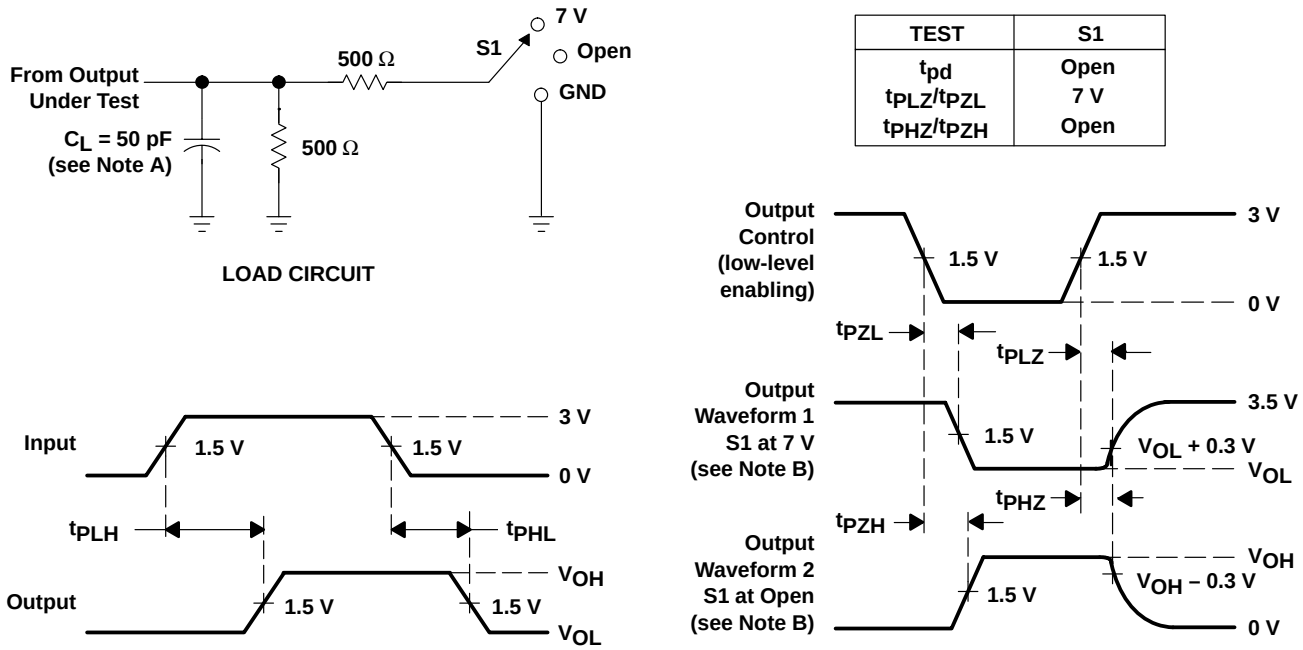

TEST	S1
t_{pd}	Open
t_{PLZ}/t_{PZL}	7 V
t_{PHZ}/t_{PZH}	Open

NOTES:
A. C_L includes probe and jig capacitance.
B. Waveform 1 is for an output with internal conditions such that the output is low except when disabled by the output control. Waveform 2 is for an output with internal conditions such that the output is high except when disabled by the output control.
C. All input pulses are supplied by generators having the following characteristics: PRR ≤ 10 MHz, Z_O = 50 Ω, t_r ≤ 2.5 ns, t_f ≤ 2.5 ns.
D. The outputs are measured one at a time with one transition per measurement.
E. t_{PLZ} and t_{PHZ} are the same as t_{dis}.
F. t_{PZL} and t_{PZH} are the same as t_{en}.
G. t_{PLH} and t_{PHL} are the same as t_{pd}.

Figure 1. Load Circuit and Voltage Waveforms

- **5-Ω Switch Connection Between Two Ports**
- **TTL-Compatible Input Levels**
- **Outputs Are Precharged by Bias Voltage to Minimize Signal Distortion During Live Insertion**
- **Package Options Include Plastic Shrink Small-Outline (DB), Small-Outline (DW), and Thin Shrink Small-Outline (PW) Packages**

DB, DW, OR PW PACKAGE
(TOP VIEW)

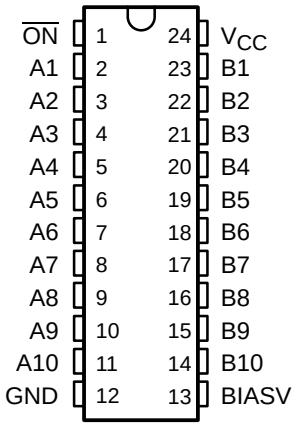

description

The SN74CBT6800 provides ten bits of high-speed TTL-compatible bus switching. The low on-state resistance of the switch allows bidirectional connections to be made while adding near-zero propagation delay. The device also precharges the B port to a user-selectable bias voltage (BIASV) to minimize live-insertion noise.

The SN74CBT6800 is organized as one 10-bit switch with a single enable ($\overline{ON}$) input. When $\overline{ON}$ is low, the switch is on and port A is connected to port B. When $\overline{ON}$ is high, the switch between port A and port B is open and the B port is precharged to BIASV through the equivalent of a 10-kΩ resistor.

The SN74CBT6800 is characterized for operation from –40°C to 85°C.

FUNCTION TABLE

$\overline{ON}$	B1–B10	FUNCTION
L	A1–A10	Connect
H	BIASV	Precharge

logic diagram (positive logic)

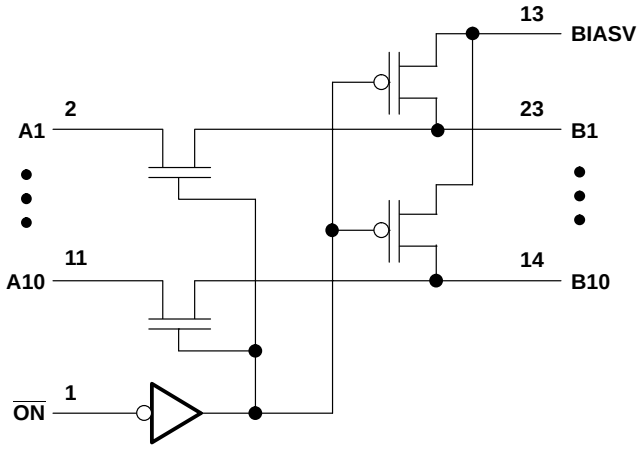

PRODUCTION DATA information is current as of publication date. Products conform to specifications per the terms of Texas Instruments standard warranty. Production processing does not necessarily include testing of all parameters.

Copyright © 1998, Texas Instruments Incorporated

absolute maximum ratings over operating free-air temperature range (unless otherwise noted)†

Supply voltage range, V_{CC} . . . . . –0.5 V to 7 V
Bias voltage range, BIASV . . . . . –0.5 V to 7 V
Input voltage range, V_I (see Note 1) . . . . . –0.5 V to 7 V
Continuous channel current . . . . . 128 mA
Input clamp current, I_{IK} (V_I < 0) . . . . . –50 mA
Package thermal impedance, θ_{JA} (see Note 2): DB package . . . . . 104°C/W
DW package . . . . . 81°C/W
PW package . . . . . 120°C/W
Storage temperature range, T_{stg} . . . . . –65°C to 150°C

† Stresses beyond those listed under "absolute maximum ratings" may cause permanent damage to the device. These are stress ratings only, and functional operation of the device at these or any other conditions beyond those indicated under "recommended operating conditions" is not implied. Exposure to absolute-maximum-rated conditions for extended periods may affect device reliability.

NOTES: 1. The input and output negative-voltage ratings may be exceeded if the input and output clamp-current ratings are observed.
2. The package thermal impedance is calculated in accordance with JESD 51.

recommended operating conditions (see Note 3)

		MIN	MAX	UNIT
V_{CC}	Supply voltage	4	5.5	V
BIASV	Supply voltage	1.3	V_{CC}	V
V_{IH}	High-level control input voltage	2		V
V_{IL}	Low-level control input voltage		0.8	V
T_A	Operating free-air temperature	–40	85	°C

NOTE 3: All unused control inputs of the device must be held at V_{CC} or GND to ensure proper device operation. Refer to the TI application report, *Implications of Slow or Floating CMOS Inputs*, literature number SCBA004.

electrical characteristics over recommended operating free-air temperature range (unless otherwise noted)

PARAMETER		TEST CONDITIONS			MIN	TYP‡	MAX	UNIT
V_{IK}		V_{CC} = 4.5 V,	I_I = –18 mA				–1.2	V
I_I		V_{CC} = 5.5 V,	V_I = 5.5 V or GND				±5	µA
I_O		V_{CC} = 4.5 V,	BIASV = 2.4 V,	V_O= 0	0.25			mA
I_{CC}		V_{CC} = 5.5 V,	I_O = 0,	V_I = V_{CC} or GND			50	µA
ΔI_{CC}§	Control inputs	V_{CC} = 3.6 V,	One input at 2.7 V,	Other inputs at V_{CC} or GND			2.5	mA
C_i	Control inputs	V_I = 3 V or 0				3.5		pF
$C_{o(OFF)}$		V_O = 3 V or 0,	Switch off			4.5		pF
r_{on}¶		V_{CC} = 4 V, TYP at V_{CC} = 4 V	V_I = 2.4 V,	I_I = 15 mA		14	20	Ω
		V_{CC} = 4.5 V	V_I = 0	I_I = 64 mA		5	7	Ω
				I_I = 30 mA		5	7	Ω
			V_I = 2.4 V,	I_I = 15 mA		10	15	Ω

‡ All typical values are at V_{CC} = 5 V (unless otherwise noted), T_A = 25°C.
§ This is the increase in supply current for each input that is at the specified TTL voltage level rather than V_{CC} or GND.
¶ Measured by the voltage drop between the A and B terminals at the indicated current through the switch. On-state resistance is determined by the lower of the voltages of the two (A or B) terminals.

switching characteristics over recommended operating free-air temperature range, C_L = 50 pF (unless otherwise noted) (see Figure 1)

PARAMETER	TEST CONDITIONS	FROM (INPUT)	TO (OUTPUT)	V_{CC} = 4 V		V_{CC} = 5 V ± 0.5 V		UNIT
				MIN	MAX	MIN	MAX	
t_{pd}†		A or B	B or A		0.35		0.25	ns
t_{PZH}	BIASV = GND	$\overline{ON}$	A or B		9.1	3.1	8.1	ns
t_{PZL}	BIASV = 3 V				9.6	3.6	8.6	
t_{PHZ}	BIASV = GND	$\overline{ON}$	A or B		5.9	2.7	6.1	ns
t_{PLZ}	BIASV = 3 V				6.4	3	7.3	

† The propagation delay is the calculated RC time constant of the typical on-state resistance of the switch and the specified load capacitance, when driven by an ideal voltage source (zero output impedance).

PARAMETER MEASUREMENT INFORMATION

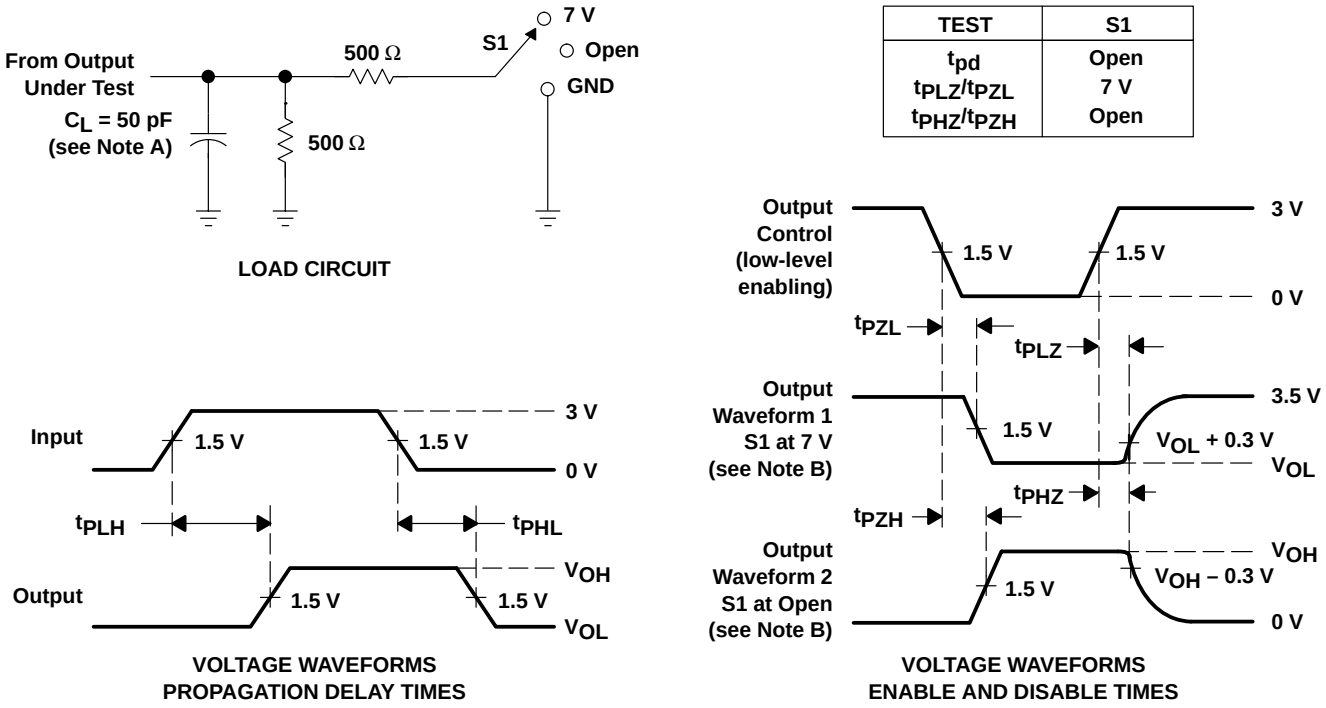

TEST	S1
t_{pd}	Open
t_{PLZ}/t_{PZL}	7 V
t_{PHZ}/t_{PZH}	Open

NOTES:
A. C_L includes probe and jig capacitance.
B. Waveform 1 is for an output with internal conditions such that the output is low except when disabled by the output control. Waveform 2 is for an output with internal conditions such that the output is high except when disabled by the output control.
C. All input pulses are supplied by generators having the following characteristics: PRR ≤ 10 MHz, Z_O = 50 Ω, t_r ≤ 2.5 ns, t_f ≤ 2.5 ns.
D. The outputs are measured one at a time with one transition per measurement.
E. t_{PLZ} and t_{PHZ} are the same as t_{dis}.
F. t_{PZL} and t_{PZH} are the same as t_{en}.
G. t_{PLH} and t_{PHL} are the same as t_{pd}.

Figure 1. Load Circuit and Voltage Waveforms

General Information 1
CBT Single Gates 2
CBT (2 to 10 Bit) 3
CBT Widebus™ 4
CBT With Integrated Diodes 5
CBTLV Single Gates 6
CBTLV (2 to 10 Bit) 7
CBTLV Widebus™ 8
Application Reports 9
Mechanical Data 10

Contents

			Page
SN54CBT16209	SN74CBT16209A	18-Bit FET Bus-Exchange Switches	4–3
	SN74CBT16210	20-Bit FET Bus Switch	4–7
	SN74CBTR16210	20-Bit FET Bus Switch	4–11
	SN74CBT16211A	24-Bit FET Bus Switch	4–15
	SN74CBTH16211	24-Bit FET Bus Switch With Bus Hold	4–19
	SN74CBTR16211	24-Bit FET Bus Switch	4–23
SN54CBT16212A	SN74CBT16212A	24-Bit FET Bus-Exchange Switches	4–27
	SN74CBTR16212	24-Bit FET Bus-Exchange Switch	4–31
	SN74CBT16213	24-Bit FET Bus-Exchange Switch	4–35
	SN74CBT16214	12-Bit 1-of-3 FET Multiplexer/Demultiplexer	4–39
	SN74CBT16232	Synchronous 16-Bit 1-of-2 FET Multiplexer/Demultiplexer	4–43
	SN74CBT16233	16-Bit 1-of-2 FET Multiplexer/Demultiplexer	4–47
	SN74CBTR16233	16-Bit 1-of-2 FET Multiplexer/Demultiplexer	4–51
SN54CBT16244	SN74CBT16244	16-Bit FET Bus Switches	4–55
	SN74CBTR16244	16-Bit FET Bus Switch	4–59
	SN74CBT16245	16-Bit FET Bus Switch	4–63
	SN74CBTR16245	16-Bit FET Bus Switch	4–67
	SN74CBT16292	12-Bit 1-of-2 FET Multiplexer/Demultiplexer With Internal Pulldown Resistors	4–71
	SN74CBT162292	12-Bit 1-of-2 FET Multiplexer/Demultiplexer With Internal Pulldown Resistors	4–75
	SN74CBT16390	16-Bit to 32-Bit FET Multiplexer/Demultiplexer Bus Switch	4–79
	SN74CBT16861	20-Bit FET Bus Switch	4–83
	SN74CBTR16861	20-Bit FET Bus Switch	4–87

- **5-Ω Switch Connection Between Two Ports**
- **TTL-Compatible Input Levels**
- **Package Options Include Plastic Thin Shrink Small-Outline (DGG), Thin Very Small-Outline (DGV), 300-mil Shrink Small-Outline (DL), and 380-mil Fine-Pitch Ceramic Flat (WD) Packages**

SN54CBT16209 . . . WD PACKAGE
SN74CBT16209A . . . DGG, DGV, OR DL PACKAGE
(TOP VIEW)

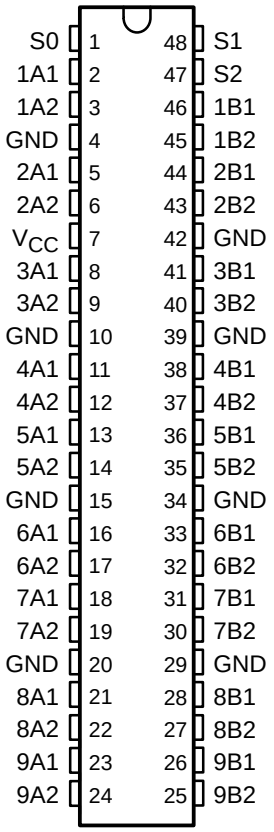

description

The SN54CBT16209 and SN74CBT16209A devices provide 18 bits of high-speed TTL-compatible bus switching or exchanging. The low on-state resistance of the switches allows connections to be made with minimal propagation delay.

The devices operate as an 18-bit bus switch or a 9-bit bus exchanger, which provides data exchanging between the four signal ports via the data-select (S0, S1, S2) terminals.

The SN54CBT16209 is characterized for operation over the full military temperature range of –55°C to 125°C. The SN74CBT16209A is characterized for operation from –40°C to 85°C.

FUNCTION TABLE

INPUTS			INPUTS/OUTPUTS		FUNCTION
S2	S1	S0	A1	A2	
L	L	L	Z	Z	Disconnect
L	L	H	B1	Z	A1 port = B1 port
L	H	L	B2	Z	A1 port = B2 port
L	H	H	Z	B1	A2 port = B1 port
H	L	L	Z	B2	A2 port = B2 port
H	L	H	Z	Z	Disconnect
H	H	L	B1	B2	A1 port = B1 port A2 port = B2 port
H	H	H	B2	B1	A1 port = B2 port A2 port = B1 port

PRODUCTION DATA information is current as of publication date. Products conform to specifications per the terms of Texas Instruments standard warranty. Production processing does not necessarily include testing of all parameters.

Copyright © 1998, Texas Instruments Incorporated
On products compliant to MIL-PRF-38535, all parameters are tested unless otherwise noted. On all other products, production processing does not necessarily include testing of all parameters.

logic diagram (positive logic)

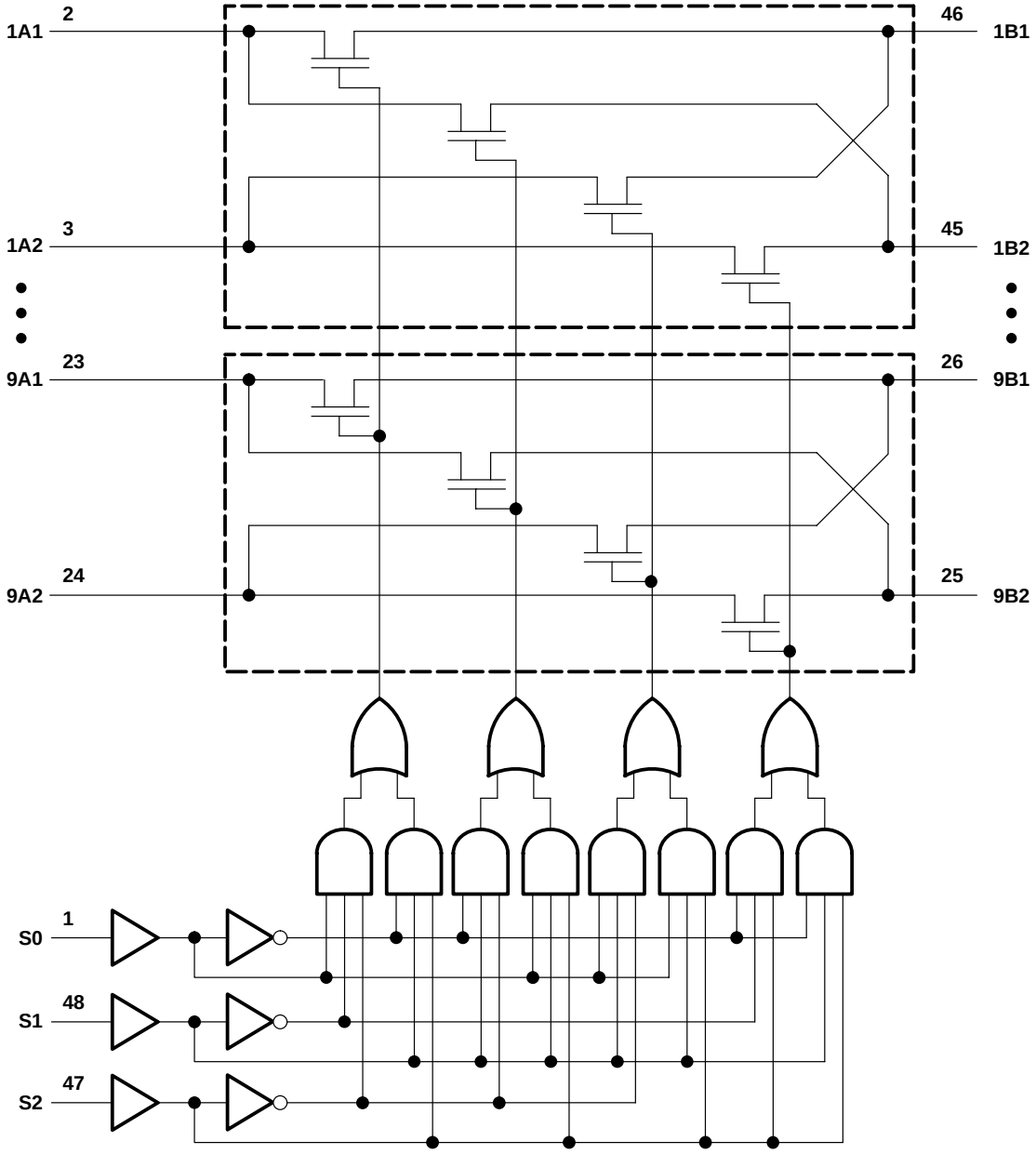

absolute maximum ratings over operating free-air temperature range (unless otherwise noted)†

Supply voltage range, V_{CC} . . . . . –0.5 V to 7 V
Input voltage range, V_I (see Note 1) . . . . . –0.5 V to 7 V
Continuous channel current . . . . . 128 mA
Input clamp current, I_{IK} (V_I < 0) . . . . . –50 mA
Package thermal impedance, θ_{JA} (see Note 2): DGG package . . . . . 89°C/W
DGV package . . . . . 93°C/W
DL package . . . . . 94°C/W
Storage temperature range, T_{stg} . . . . . –65°C to 150°C

† Stresses beyond those listed under "absolute maximum ratings" may cause permanent damage to the device. These are stress ratings only, and functional operation of the device at these or any other conditions beyond those indicated under "recommended operating conditions" is not implied. Exposure to absolute-maximum-rated conditions for extended periods may affect device reliability.

NOTES: 1. The input and output negative-voltage ratings may be exceeded if the input and output clamp-current ratings are observed.
2. The package thermal impedance is calculated in accordance with JESD 51.

recommended operating conditions (see Note 3)

		SN54CBT16209		SN74CBT16209A		UNIT
		MIN	MAX	MIN	MAX	
V_{CC}	Supply voltage	4	5.5	4	5.5	V
V_{IH}	High-level control input voltage	2		2		V
V_{IL}	Low-level control input voltage		0.8		0.8	V
T_A	Operating free-air temperature	–55	125	–40	85	°C

NOTE 3: All unused control inputs of the device must be held at V_{CC} or GND to ensure proper device operation. Refer to the TI application report, *Implications of Slow or Floating CMOS Inputs*, literature number SCBA004.

electrical characteristics over recommended operating free-air temperature range (unless otherwise noted)

PARAMETER		TEST CONDITIONS			MIN	TYP‡	MAX	UNIT
V_{IK}		V_{CC} = 4.5 V,	I_I = –18 mA				–1.2	V
I_I		V_{CC} = 0,	V_I = 5.5 V				10	µA
		V_{CC} = 5.5 V,	V_I = 5.5 V or GND				±1	
I_{CC}		V_{CC} = 5.5 V,	I_O = 0,	V_I = V_{CC} or GND			3	µA
ΔI_{CC}§	Control inputs	V_{CC} = 5.5 V,	One input at 3.4 V,	Other inputs at V_{CC} or GND			2.5	mA
C_i	Control inputs	V_I = 3 V or 0				4		pF
$C_{io(OFF)}$		V_O = 3 V or 0,	S0, S1, or S2 = V_{CC}			7.5		pF
r_{on}¶		V_{CC} = 4 V, TYP at V_{CC} = 4 V	V_I = 2.4 V,	I_I = 15 mA				Ω
		V_{CC} = 4.5 V	V_I = 0	I_I = 64 mA		4	8	
				I_I = 30 mA		4	8	
			V_I = 2.4 V,	I_I = 15 mA		6	15	

‡ All typical values are at V_{CC} = 5 V (unless otherwise noted), T_A = 25°C.
§ This is the increase in supply current for each input that is at the specified TTL voltage level rather than V_{CC} or GND.
¶ Measured by the voltage drop between the A and B terminals at the indicated current through the switch. On-state resistance is determined by the lower of the voltages of the two (A or B) terminals.

switching characteristics over recommended operating free-air temperature range, C_L = 50 pF (unless otherwise noted) (see Figure 1)

PARAMETER	FROM (INPUT)	TO (OUTPUT)	SN54CBT16209				SN74CBT16209A				UNIT
			V_{CC} = 4 V		V_{CC} = 5 V ± 0.5 V		V_{CC} = 4 V		V_{CC} = 5 V ± 0.5 V		
			MIN	MAX	MIN	MAX	MIN	MAX	MIN	MAX	
t_{pd}†	A or B	B or A				0.8*		0.35		0.25	ns
t_{pd}	S	A or B		14	2	13.1		9.9	1.5	9	ns
t_{en}	S	A or B		16	1.7	15.3		10.3	1.5	9.8	ns
t_{dis}	S	A or B		14.5	1	13.2		9.3	1.5	8.8	ns

* On products compliant to MIL-PRF-38535, this parameter is not production tested.

† The propagation delay is the calculated RC time constant of the typical on-state resistance of the switch and the specified load capacitance, when driven by an ideal voltage source (zero output impedance).

PARAMETER MEASUREMENT INFORMATION

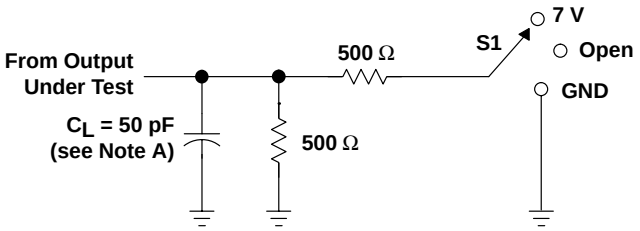

LOAD CIRCUIT

TEST	S1
t_{pd}	Open
t_{PLZ}/t_{PZL}	7 V
t_{PHZ}/t_{PZH}	Open

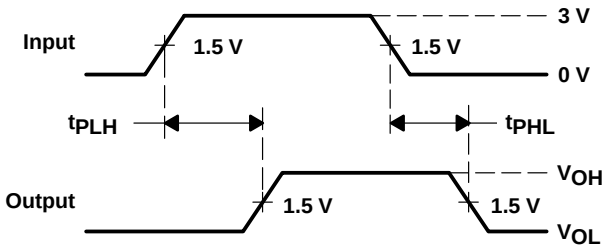

VOLTAGE WAVEFORMS
PROPAGATION DELAY TIMES

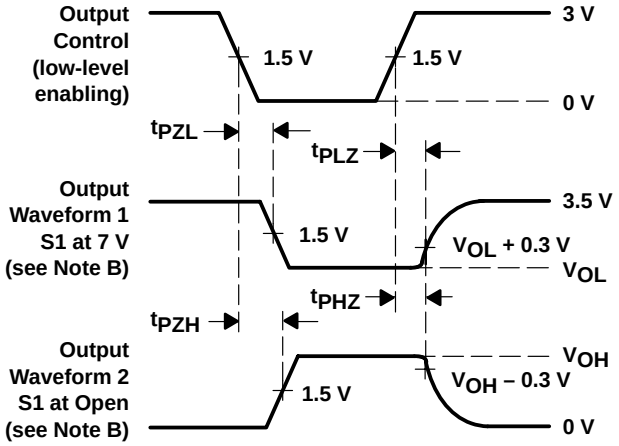

VOLTAGE WAVEFORMS
ENABLE AND DISABLE TIMES

NOTES: A. C_L includes probe and jig capacitance.
B. Waveform 1 is for an output with internal conditions such that the output is low except when disabled by the output control. Waveform 2 is for an output with internal conditions such that the output is high except when disabled by the output control.
C. All input pulses are supplied by generators having the following characteristics: PRR ≤ 10 MHz, Z_O = 50 Ω, t_r ≤ 2.5 ns, t_f ≤ 2.5 ns.
D. The outputs are measured one at a time with one transition per measurement.
E. t_{PLZ} and t_{PHZ} are the same as t_{dis}.
F. t_{PZL} and t_{PZH} are the same as t_{en}.
G. t_{PLH} and t_{PHL} are the same as t_{pd}.

Figure 1. Load Circuit and Voltage Waveforms

- **5-Ω Switch Connection Between Two Ports**
- **TTL-Compatible Input Levels**
- **Package Options Include Plastic 300-mil Shrink Small-Outline (DL), Thin Shrink Small-Outline (DGG), and Thin Very Small-Outline (DGV) Packages**

DGG, DGV, OR DL PACKAGE
(TOP VIEW)

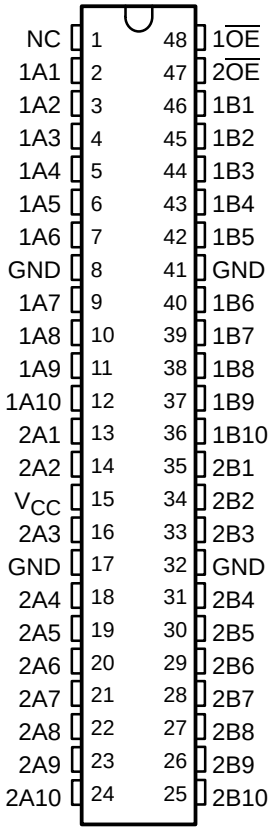

NC – No internal connection

description

The SN74CBT16210 provides 20 bits of high-speed TTL-compatible bus switching. The low on-state resistance of the switch allows connections to be made with minimal propagation delay.

The device is organized as a dual 10-bit bus switch with separate output-enable ($\overline{OE}$) inputs. It can be used as two 10-bit bus switches or as one 20-bit bus switch. When $\overline{OE}$ is low, the associated 10-bit bus switch is on and port A is connected to port B. When $\overline{OE}$ is high, the switch is open, and a high-impedance state exists between the ports.

The SN74CBT16210 is characterized for operation from –40°C to 85°C.

FUNCTION TABLE
(each 10-bit bus switch)

INPUT $\overline{OE}$	FUNCTION
L	A port = B port
H	Disconnect

logic diagram (positive logic)

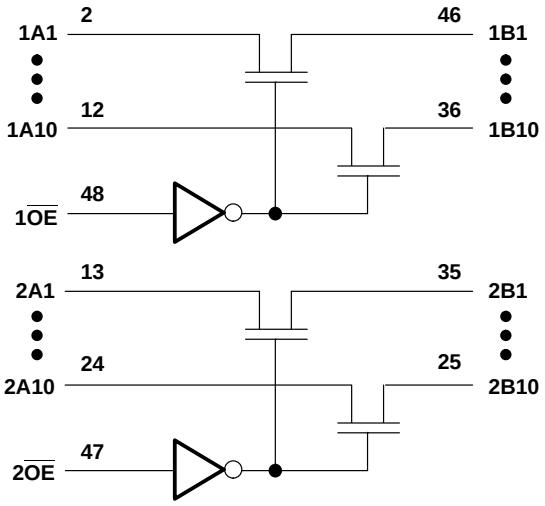

PRODUCTION DATA information is current as of publication date. Products conform to specifications per the terms of Texas Instruments standard warranty. Production processing does not necessarily include testing of all parameters.

Copyright © 1998, Texas Instruments Incorporated

absolute maximum ratings over operating free-air temperature range (unless otherwise noted)†

Supply voltage range, V_{CC} . . . . . –0.5 V to 7 V
Input voltage range, V_I (see Note 1) . . . . . –0.5 V to 7 V
Continuous channel current . . . . . 128 mA
Input clamp current, I_{IK} (V_I < 0) . . . . . –50 mA
Package thermal impedance, θ_{JA} (see Note 2): DGG package . . . . . 89°C/W
DGV package . . . . . 93°C/W
DL package . . . . . 94°C/W
Storage temperature range, T_{stg} . . . . . –65°C to 150°C

† Stresses beyond those listed under "absolute maximum ratings" may cause permanent damage to the device. These are stress ratings only, and functional operation of the device at these or any other conditions beyond those indicated under "recommended operating conditions" is not implied. Exposure to absolute-maximum-rated conditions for extended periods may affect device reliability.

NOTES: 1. The input and output negative-voltage ratings may be exceeded if the input and output clamp-current ratings are observed.
2. The package thermal impedance is calculated in accordance with JESD 51.

recommended operating conditions (see Note 3)

		MIN	MAX	UNIT
V_{CC}	Supply voltage	4	5.5	V
V_{IH}	High-level control input voltage	2		V
V_{IL}	Low-level control input voltage		0.8	V
T_A	Operating free-air temperature	–40	85	°C

NOTE 3: All unused control inputs of the device must be held at V_{CC} or GND to ensure proper device operation. Refer to the TI application report, *Implications of Slow or Floating CMOS Inputs*, literature number SCBA004.

electrical characteristics over recommended operating free-air temperature range (unless otherwise noted)

PARAMETER		TEST CONDITIONS			MIN	TYP‡	MAX	UNIT
V_{IK}		V_{CC} = 4.5 V,	I_I = –18 mA				–1.2	V
I_I		V_{CC} = 0 V,	V_I = 5.5 V				10	µA
		V_{CC} = 5.5 V,	V_I = 5.5 V or GND				±1	
I_{CC}		V_{CC} = 5.5 V,	I_O = 0,	V_I = V_{CC} or GND			3	µA
ΔI_{CC}§	Control inputs	V_{CC} = 5.5 V,	One input at 3.4 V,	Other inputs at V_{CC} or GND			2.5	mA
C_i	Control inputs	V_I = 3 V or 0				4.5		pF
$C_{io(OFF)}$		V_O = 3 V or 0,	$\overline{OE}$ = V_{CC}			5.5		pF
r_{on}¶		V_{CC} = 4 V, TYP at V_{CC} = 4 V	V_I = 2.4 V,	I_I = 15 mA		14	20	Ω
		V_{CC} = 4.5 V	V_I = 0	I_I = 64 mA		5	7	
				I_I = 30 mA		5	7	
			V_I = 2.4 V,	I_I = 15 mA		8	12	

‡ All typical values are at V_{CC} = 5 V (unless otherwise noted), T_A = 25°C.
§ This is the increase in supply current for each input that is at the specified TTL voltage level rather than V_{CC} or GND.
¶ Measured by the voltage drop between the A and B terminals at the indicated current through the switch. On-state resistance is determined by the lowest voltage of the two (A or B) terminals.

switching characteristics over recommended operating free-air temperature range, C_L = 50 pF (unless otherwise noted) (see Figure 1)

PARAMETER	FROM (INPUT)	TO (OUTPUT)	V_{CC} = 4 V		V_{CC} = 5 V ± 0.5 V		UNIT
			MIN	MAX	MIN	MAX	
t_{pd}†	A or B	B or A		0.35		0.25	ns
t_{en}	$\overline{OE}$	A or B		9.3	3.3	8.6	ns
t_{dis}	$\overline{OE}$	A or B		7.1	2.8	7.9	ns

† The propagation delay is the calculated RC time constant of the typical on-state resistance of the switch and the specified load capacitance, when driven by an ideal voltage source (zero output impedance).

PARAMETER MEASUREMENT INFORMATION

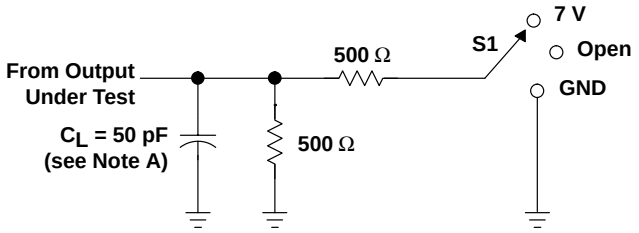

LOAD CIRCUIT

TEST	S1
t_{pd}	Open
t_{PLZ}/t_{PZL}	7 V
t_{PHZ}/t_{PZH}	Open

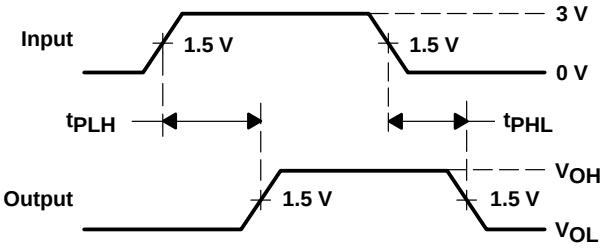

VOLTAGE WAVEFORMS
PROPAGATION DELAY TIMES

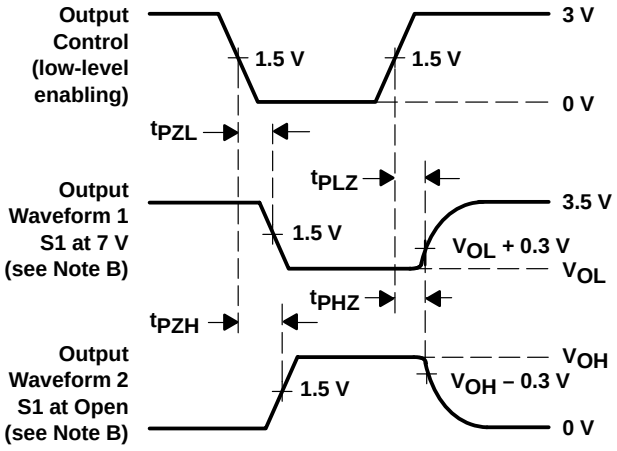

VOLTAGE WAVEFORMS
ENABLE AND DISABLE TIMES

NOTES: A. C_L includes probe and jig capacitance.
B. Waveform 1 is for an output with internal conditions such that the output is low except when disabled by the output control. Waveform 2 is for an output with internal conditions such that the output is high except when disabled by the output control.
C. All input pulses are supplied by generators having the following characteristics: PRR ≤ 10 MHz, Z_O = 50 Ω, t_r ≤ 2.5 ns, t_f ≤ 2.5 ns.
D. The outputs are measured one at a time with one transition per measurement.
E. t_{PLZ} and t_{PHZ} are the same as t_{dis}.
F. t_{PZL} and t_{PZH} are the same as t_{en}.
G. t_{PLH} and t_{PHL} are the same as t_{pd}.

Figure 1. Load Circuit and Voltage Waveforms

- **25-Ω Switch Connection Between Two Ports**
- **TTL-Compatible Input Levels**
- **Package Options Include Plastic 300-mil Shrink Small-Outline (DL), Thin Shrink Small-Outline (DGG), and Thin Very Small-Outline (DGV) Packages**

DGG, DGV, OR DL PACKAGE
(TOP VIEW)

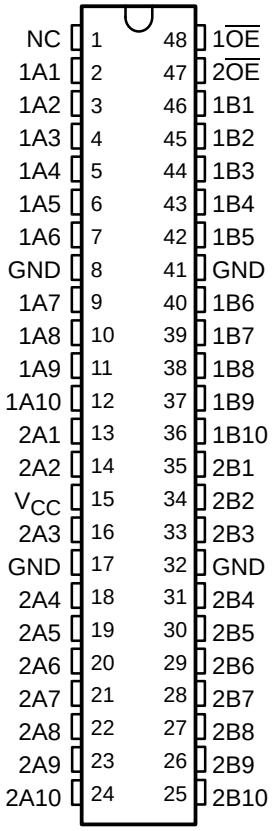

NC – No internal connection

description

The SN74CBTR16210 provides 20 bits of high-speed TTL-compatible bus switching. The low on-state resistance of the switch allows connections to be made with minimal propagation delay.

The device is organized as a dual 10-bit bus switch with separate output-enable ($\overline{OE}$) inputs. It can be used as two 10-bit bus switches or as one 20-bit bus switch. When $\overline{OE}$ is low, the associated 10-bit bus switch is on and port A is connected to port B. When $\overline{OE}$ is high, the switch is open, and a high-impedance state exists between the ports.

The device has equivalent 25-Ω series resistors to reduce signal-reflection noise. This eliminates the need for external terminating resistors.

The SN74CBTR16210 is characterized for operation from –40°C to 85°C.

FUNCTION TABLE
(each 10-bit bus switch)

INPUT $\overline{OE}$	FUNCTION
L	A port = B port
H	Disconnect

PRODUCT PREVIEW

PRODUCT PREVIEW information concerns products in the formative or design phase of development. Characteristic data and other specifications are design goals. Texas Instruments reserves the right to change or discontinue these products without notice.

Copyright © 1998, Texas Instruments Incorporated

PRODUCT PREVIEW

logic diagram (positive logic)

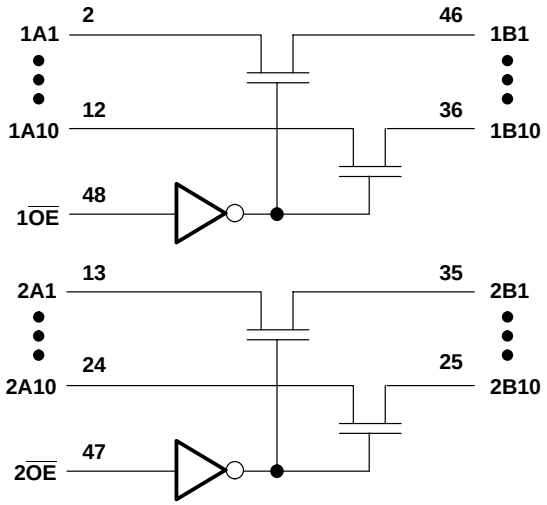

absolute maximum ratings over operating free-air temperature range (unless otherwise noted)†

Supply voltage range, V_{CC}	–0.5 V to 7 V
Input voltage range, V_I (see Note 1)	–0.5 V to 7 V
Continuous channel current	128 mA
Input clamp current, I_{IK} ($V_I < 0$)	–50 mA
Package thermal impedance, θ_{JA} (see Note 2): DGG package	89°C/W
DGV package	93°C/W
DL package	94°C/W
Storage temperature range, T_{stg}	–65°C to 150°C

† Stresses beyond those listed under "absolute maximum ratings" may cause permanent damage to the device. These are stress ratings only, and functional operation of the device at these or any other conditions beyond those indicated under "recommended operating conditions" is not implied. Exposure to absolute-maximum-rated conditions for extended periods may affect device reliability.

NOTES: 1. The input and output negative-voltage ratings may be exceeded if the input and output clamp-current ratings are observed.
2. The package thermal impedance is calculated in accordance with JESD 51.

recommended operating conditions (see Note 3)

		MIN	MAX	UNIT
V_{CC}	Supply voltage	4.5	5.5	V
V_{IH}	High-level control input voltage	2		V
V_{IL}	Low-level control input voltage		0.8	V
T_A	Operating free-air temperature	–40	85	°C

NOTE 3: All unused control inputs of the device must be held at V_{CC} or GND to ensure proper device operation. Refer to the TI application report, *Implications of Slow or Floating CMOS Inputs*, literature number SCBA004.

electrical characteristics over recommended operating free-air temperature range (unless otherwise noted)

PARAMETER		TEST CONDITIONS			MIN	TYP†	MAX	UNIT
V_{IK}		V_{CC} = 4.5 V,	I_I = –18 mA				–1.2	V
I_I		V_{CC} = 0 V,	V_I = 5.5 V				10	µA
		V_{CC} = 5.5 V,	V_I = 5.5 V or GND				±1	
I_{CC}		V_{CC} = 5.5 V,	I_O = 0,	V_I = V_{CC} or GND			3	µA
ΔI_{CC}‡	Control inputs	V_{CC} = 5.5 V,	One input at 3.4 V,	Other inputs at V_{CC} or GND			2.5	mA
C_i	Control inputs	V_I = 3 V or 0						pF
$C_{io(OFF)}$		V_O = 3 V or 0,	$\overline{OE}$ = V_{CC}					pF
r_{on}§		V_{CC} = 4.5 V	V_I = 0	I_I = 64 mA				Ω
				I_I = 30 mA				
			V_I = 2.4 V,	I_I = 15 mA				

† All typical values are at V_{CC} = 5 V (unless otherwise noted), T_A = 25°C.
‡ This is the increase in supply current for each input that is at the specified TTL voltage level rather than V_{CC} or GND.
§ Measured by the voltage drop between the A and B terminals at the indicated current through the switch. On-state resistance is determined by the lowest voltage of the two (A or B) terminals.

switching characteristics over recommended operating free-air temperature range, C_L = 50 pF (unless otherwise noted) (see Figure 1)

PARAMETER	FROM (INPUT)	TO (OUTPUT)	MIN	MAX	UNIT
t_{pd}¶	A or B	B or A			ns
t_{en}	$\overline{OE}$	A or B			ns
t_{dis}	$\overline{OE}$	A or B			ns

¶ The propagation delay is the calculated RC time constant of the typical on-state resistance of the switch and the specified load capacitance, when driven by an ideal voltage source (zero output impedance).

PRODUCT PREVIEW

PARAMETER MEASUREMENT INFORMATION

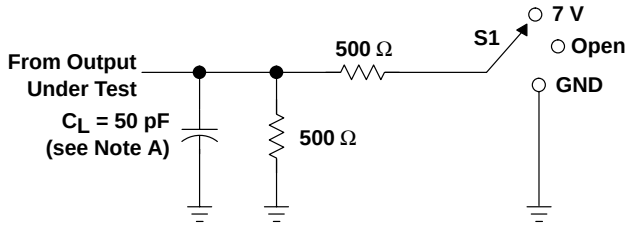

LOAD CIRCUIT

TEST	S1
t_{pd}	Open
t_{PLZ}/t_{PZL}	7 V
t_{PHZ}/t_{PZH}	Open

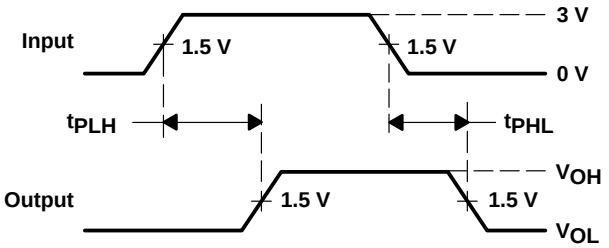

VOLTAGE WAVEFORMS
PROPAGATION DELAY TIMES

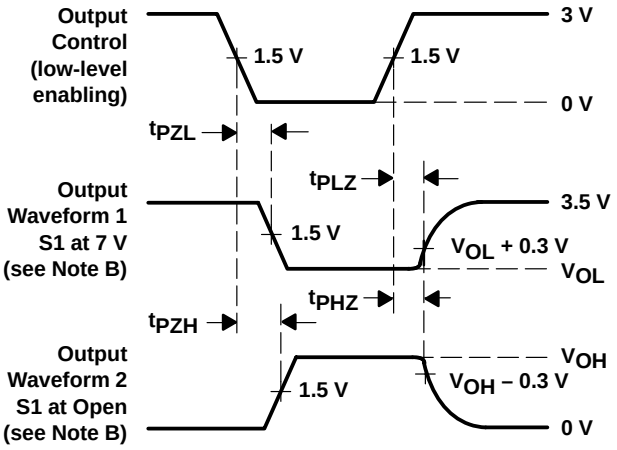

VOLTAGE WAVEFORMS
ENABLE AND DISABLE TIMES

NOTES: A. C_L includes probe and jig capacitance.
B. Waveform 1 is for an output with internal conditions such that the output is low except when disabled by the output control. Waveform 2 is for an output with internal conditions such that the output is high except when disabled by the output control.
C. All input pulses are supplied by generators having the following characteristics: PRR ≤ 10 MHz, Z_O = 50 Ω, t_r ≤ 2.5 ns, t_f ≤ 2.5 ns.
D. The outputs are measured one at a time with one transition per measurement.
E. t_{PLZ} and t_{PHZ} are the same as t_{dis}.
F. t_{PZL} and t_{PZH} are the same as t_{en}.
G. t_{PLH} and t_{PHL} are the same as t_{pd}.

Figure 1. Load Circuit and Voltage Waveforms

PRODUCT PREVIEW

- **5-Ω Switch Connection Between Two Ports**
- **TTL-Compatible Input Levels**
- **Package Options Include Plastic 300-mil Shrink Small-Outline (DL), Thin Shrink Small-Outline (DGG), and Thin Very Small-Outline (DGV) Packages**

description

The SN74CBT16211A provides 24 bits of high-speed TTL-compatible bus switching. The low on-state resistance of the switch allows connections to be made with minimal propagation delay.

The device operates as a dual 12-bit bus switch or single 24-bit bus switch. When $1\overline{OE}$ is low, 1A is connected to 1B. When $2\overline{OE}$ is low, 2A is connected to 2B.

The SN74CBT16211A is characterized for operation from –40°C to 85°C.

FUNCTION TABLE
(each 12-bit bus switch)

INPUTS		INPUTS/OUTPUTS	
$1\overline{OE}$	$2\overline{OE}$	1A, 1B	2A, 2B
L	L	1A = 1B	2A = 2B
L	H	1A = 1B	Z
H	L	Z	2A = 2B
H	H	Z	Z

DGG, DGV, OR DL PACKAGE
(TOP VIEW)

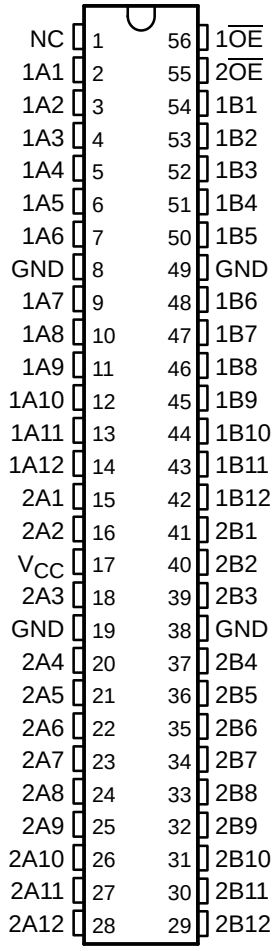

NC – No internal connection

PRODUCTION DATA information is current as of publication date. Products conform to specifications per the terms of Texas Instruments standard warranty. Production processing does not necessarily include testing of all parameters.

Copyright © 1998, Texas Instruments Incorporated

logic diagram (positive logic)

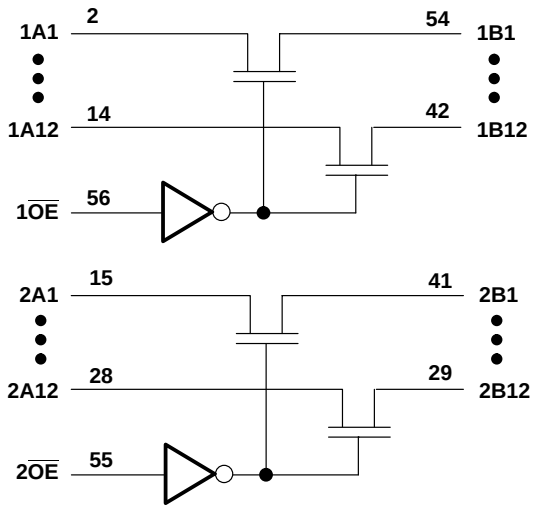

absolute maximum ratings over operating free-air temperature range (unless otherwise noted)†

Supply voltage range, V_{CC} . . . . . –0.5 V to 7 V
Input voltage range, V_I (see Note 1) . . . . . –0.5 V to 7 V
Continuous channel current . . . . . 128 mA
Input clamp current, I_{IK} ($V_I < 0$) . . . . . –50 mA
Package thermal impedance, θ_{JA} (see Note 2): DGG package . . . . . 81°C/W
DGV package . . . . . 86°C/W
DL package . . . . . 74°C/W
Storage temperature range, T_{stg} . . . . . –65°C to 150°C

† Stresses beyond those listed under “absolute maximum ratings” may cause permanent damage to the device. These are stress ratings only, and functional operation of the device at these or any other conditions beyond those indicated under “recommended operating conditions” is not implied. Exposure to absolute-maximum-rated conditions for extended periods may affect device reliability.

NOTES: 1. The input and output negative-voltage ratings may be exceeded if the input and output clamp-current ratings are observed.
2. The package thermal impedance is calculated in accordance with JESD 51.

recommended operating conditions (see Note 3)

		MIN	MAX	UNIT
V_{CC}	Supply voltage	4	5.5	V
V_{IH}	High-level control input voltage	2		V
V_{IL}	Low-level control input voltage		0.8	V
T_A	Operating free-air temperature	–40	85	°C

NOTE 3: All unused control inputs of the device must be held at V_{CC} or GND to ensure proper device operation. Refer to the TI application report, *Implications of Slow or Floating CMOS Inputs*, literature number SCBA004.

electrical characteristics over recommended operating free-air temperature range (unless otherwise noted)

PARAMETER		TEST CONDITIONS			MIN	TYP†	MAX	UNIT
V_{IK}		V_{CC} = 4.5 V,	I_I = –18 mA				–1.2	V
I_I		V_{CC} = 0 V,	V_I = 5.5 V				10	µA
		V_{CC} = 5.5 V,	V_I = 5.5 V or GND				±1	
I_{CC}		V_{CC} = 5.5 V,	I_O = 0,	V_I = V_{CC} or GND			3	µA
ΔI_{CC}‡	Control inputs	V_{CC} = 5.5 V,	One input at 3.4 V,	Other inputs at V_{CC} or GND			2.5	mA
C_i	Control inputs	V_I = 3 V or 0				3		pF
$C_{io(OFF)}$		V_O = 3 V or 0,	$\overline{OE}$ = V_{CC}			5.5		pF
r_{on}§		V_{CC} = 4 V, TYP at V_{CC} = 4 V	V_I = 2.4 V,	I_I = 15 mA		14	20	Ω
		V_{CC} = 4.5 V	V_I = 0	I_I = 64 mA		5	7	
				I_I = 30 mA		5	7	
			V_I = 2.4 V,	I_I = 15 mA		8	12	

† All typical values are at V_{CC} = 5 V (unless otherwise noted), T_A = 25°C.
‡ This is the increase in supply current for each input that is at the specified TTL voltage level rather than V_{CC} or GND.
§ Measured by the voltage drop between the A and B terminals at the indicated current through the switch. On-state resistance is determined by the lowest voltage of the two (A or B) terminals.

switching characteristics over recommended operating free-air temperature range, C_L = 50 pF (unless otherwise noted) (see Figure 1)

PARAMETER	FROM (INPUT)	TO (OUTPUT)	V_{CC} = 4 V		V_{CC} = 5 V ± 0.5 V		UNIT
			MIN	MAX	MIN	MAX	
t_{pd}¶	A or B	B or A		0.35		0.25	ns
t_{en}	$\overline{OE}$	A or B		9.3	3.3	8.6	ns
t_{dis}	$\overline{OE}$	A or B		7.1	2.8	7.9	ns

¶ The propagation delay is the calculated RC time constant of the typical on-state resistance of the switch and the specified load capacitance, when driven by an ideal voltage source (zero output impedance).

PARAMETER MEASUREMENT INFORMATION

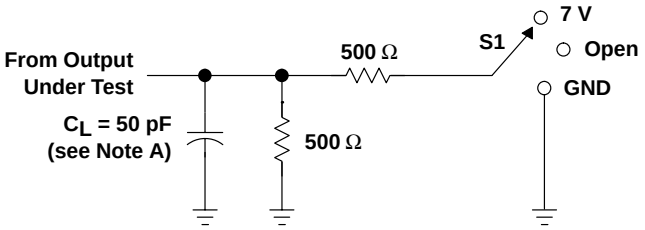

LOAD CIRCUIT

TEST	S1
t_{pd}	Open
t_{PLZ}/t_{PZL}	7 V
t_{PHZ}/t_{PZH}	Open

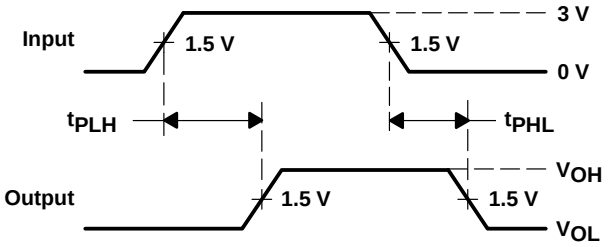

VOLTAGE WAVEFORMS
PROPAGATION DELAY TIMES

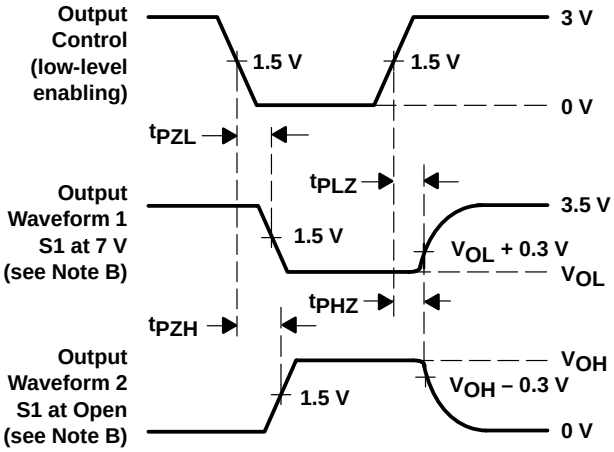

VOLTAGE WAVEFORMS
ENABLE AND DISABLE TIMES

NOTES:
A. C_L includes probe and jig capacitance.
B. Waveform 1 is for an output with internal conditions such that the output is low except when disabled by the output control. Waveform 2 is for an output with internal conditions such that the output is high except when disabled by the output control.
C. All input pulses are supplied by generators having the following characteristics: PRR ≤ 10 MHz, Z_O = 50 Ω, t_r ≤ 2.5 ns, t_f ≤ 2.5 ns.
D. The outputs are measured one at a time with one transition per measurement.
E. t_{PLZ} and t_{PHZ} are the same as t_{dis}.
F. t_{PZL} and t_{PZH} are the same as t_{en}.
G. t_{PLH} and t_{PHL} are the same as t_{pd}.

Figure 1. Load Circuit and Voltage Waveforms

- **5-Ω Switch Connection Between Two Ports**
- **TTL-Compatible Input Levels**
- **Bus Hold on Data Inputs/Outputs Eliminates the Need for External Pullup/Pulldown Resistors**
- **Package Options Include Plastic 300-mil Shrink Small-Outline (DL), Thin Shrink Small-Outline (DGG), and Thin Very Small-Outline (DGV) Packages**

DGG, DGV, OR DL PACKAGE
(TOP VIEW)

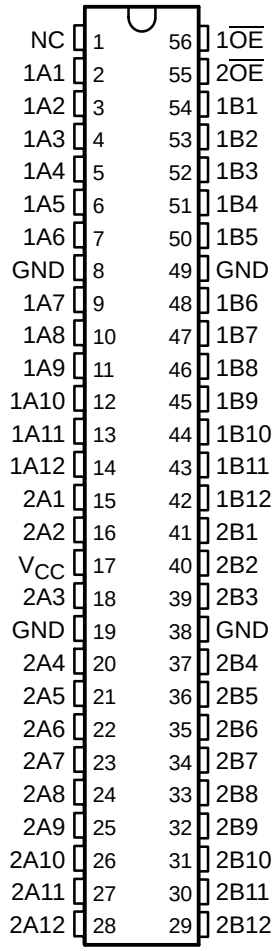

NC – No internal connection

description

The SN74CBTH16211 provides 24 bits of high-speed TTL-compatible bus switching. The low on-state resistance of the switch allows connections to be made with minimal propagation delay.

The device is organized as dual 12-bit bus switches with separate output-enable ($\overline{OE}$) inputs. It can be used as two 12-bit bus switches or one 24-bit bus switch. When $\overline{OE}$ is low, the associated 12-bit bus switch is on and port A is connected to port B. When $\overline{OE}$ is high, the switch is open, and a high-impedance state exists between the two ports.

Active bus-hold circuitry is provided to hold unused or floating A and B ports at a valid logic level.

To ensure the high-impedance state during power up or power down, $\overline{OE}$ should be tied to V_{CC} through a pullup resistor; the minimum value of the resistor is determined by the current-sinking capability of the driver.

The SN74CBTH16211 is characterized for operation from –40°C to 85°C.

FUNCTION TABLE
(each bus switch)

INPUT $\overline{OE}$	FUNCTION
L	A port = B port
H	Disconnect

PRODUCTION DATA information is current as of publication date. Products conform to specifications per the terms of Texas Instruments standard warranty. Production processing does not necessarily include testing of all parameters.

Copyright © 1998, Texas Instruments Incorporated

logic diagram (positive logic)

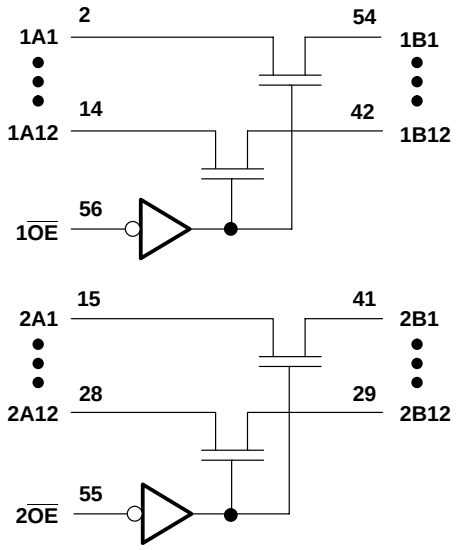

absolute maximum ratings over operating free-air temperature range (unless otherwise noted)†

Supply voltage range, V_{CC}	–0.5 V to 7 V
Input voltage range, V_I (see Note 1)	–0.5 V to 7 V
Continuous channel current	128 mA
Input clamp current, I_{IK} ($V_I < 0$)	–50 mA
Package thermal impedance, θ_{JA} (see Note 2): DGG package	81°C/W
DGV package	86°C/W
DL package	74°C/W
Storage temperature range, T_{stg}	–65°C to 150°C

† Stresses beyond those listed under "absolute maximum ratings" may cause permanent damage to the device. These are stress ratings only, and functional operation of the device at these or any other conditions beyond those indicated under "recommended operating conditions" is not implied. Exposure to absolute-maximum-rated conditions for extended periods may affect device reliability.

NOTES: 1. The input and output negative-voltage ratings may be exceeded if the input and output clamp-current ratings are observed.
2. The package thermal impedance is calculated in accordance with JESD 51.

recommended operating conditions (see Note 3)

		MIN	MAX	UNIT
V_{CC}	Supply voltage	4	5.5	V
V_{IH}	High-level control input voltage	2		V
V_{IL}	Low-level control input voltage		0.8	V
T_A	Operating free-air temperature	–40	85	°C

NOTE 3: All unused control inputs of the device must be held at V_{CC} or GND to ensure proper device operation. Refer to the TI application report, *Implications of Slow or Floating CMOS Inputs*, literature number SCBA004.

electrical characteristics over recommended operating free-air temperature range (unless otherwise noted)

PARAMETER		TEST CONDITIONS			MIN	TYP†	MAX	UNIT
V_{IK}		V_{CC} = 4.5 V,	I_I = –18 mA				–1.2	V
I_I	Control inputs	V_{CC} = 0 V,	V_I = 5.5 V				±10	µA
	All inputs	V_{CC} = 5.5 V,	V_I = 5.5 V or GND				±10	
I_{BHL}‡		V_{CC} = 4.5 V,	V_I = 0.8 V		100			µA
I_{BHH}§		V_{CC} = 4.5 V,	V_I = 2 V		–100			µA
I_{BHLO}¶		V_{CC} = 5.5 V,	V_I = 0 to 5.5 V		500			µA
I_{BHHO}#		V_{CC} = 5.5 V,	V_I = 0 to 5.5 V		–500			µA
I_{CC}		V_{CC} = 5.5 V,	I_O = 0,	V_I = V_{CC} or GND			3	µA
ΔI_{CC}‖	Control inputs	V_{CC} = 5.5 V,	One input at 3.4 V,	Other inputs at V_{CC} or GND			2.5	mA
r_{on}☆		V_{CC} = 4 V, TYP at V_{CC} = 4 V	V_I = 2.4 V,	I_I = 15 mA		14	20	Ω
		V_{CC} = 4.5 V	V_I = 0	I_I = 64 mA		5	7	
				I_I = 30 mA		5	7	
			V_I = 2.4 V,	I_I = 15 mA		8	12	

† All typical values are at V_{CC} = 5 V (unless otherwise noted), T_A = 25°C.
‡ The bus hold circuit can sink at least the minimum low sustaining current at V_{IL} max. I_{BHL} should be measured after lowering V_{IN} to GND and then raising it to V_{IL} max.
§ The bus hold circuit can source at least the minimum high sustaining current at V_{IH} min. I_{BHH} should be measured after raising V_{IN} to V_{CC} and then lowering it to V_{IH} min.
¶ An external driver must source at least I_{BHLO} to switch this node from low to high.
# An external driver must sink at least I_{BHHO} to switch this node from high to low.
‖ This is the increase in supply current for each input that is at the specified TTL voltage level rather than V_{CC} or GND.
☆ Measured by the voltage drop between the A and B terminals at the indicated current through the switch. On-state resistance is determined by the lowest voltage of the two (A or B) terminals.

switching characteristics over recommended operating free-air temperature range, C_L = 50 pF (unless otherwise noted) (see Figure 1)

PARAMETER	FROM (INPUT)	TO (OUTPUT)	V_{CC} = 4 V		V_{CC} = 5 V ± 0.5 V		UNIT
			MIN	MAX	MIN	MAX	
t_{pd}□	A or B	B or A		0.35		0.25	ns
t_{en}	$\overline{OE}$	A or B		9.9	1	9.6	ns
t_{dis}	$\overline{OE}$	A or B		9.5	1	8.3	ns

□ The propagation delay is the calculated RC time constant of the typical on-state resistance of the switch and the specified load capacitance, when driven by an ideal voltage source (zero output impedance).

PARAMETER MEASUREMENT INFORMATION

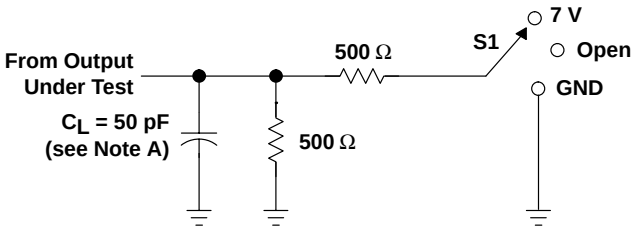

LOAD CIRCUIT

TEST	S1
t_{pd}	Open
t_{PLZ}/t_{PZL}	7 V
t_{PHZ}/t_{PZH}	Open

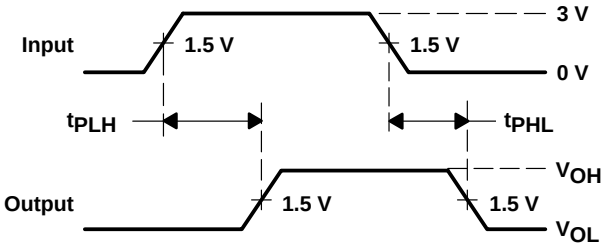

VOLTAGE WAVEFORMS
PROPAGATION DELAY TIMES

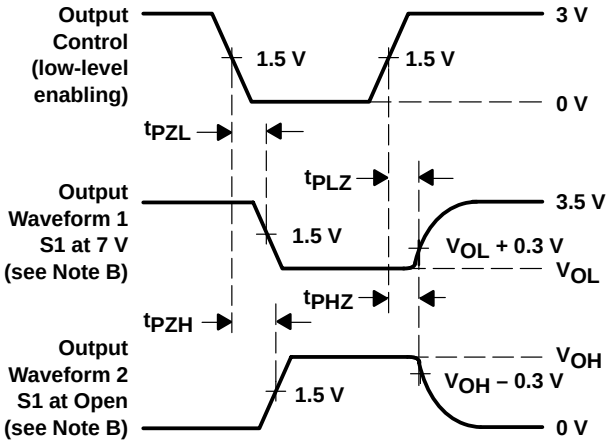

VOLTAGE WAVEFORMS
ENABLE AND DISABLE TIMES

NOTES:
A. C_L includes probe and jig capacitance.
B. Waveform 1 is for an output with internal conditions such that the output is low except when disabled by the output control. Waveform 2 is for an output with internal conditions such that the output is high except when disabled by the output control.
C. All input pulses are supplied by generators having the following characteristics: PRR ≤ 10 MHz, Z_O = 50 Ω, t_r ≤ 2.5 ns, t_f ≤ 2.5 ns.
D. The outputs are measured one at a time with one transition per measurement.
E. t_{PLZ} and t_{PHZ} are the same as t_{dis}.
F. t_{PZL} and t_{PZH} are the same as t_{en}.
G. t_{PLH} and t_{PHL} are the same as t_{pd}.

Figure 1. Load Circuit and Voltage Waveforms

- **25-Ω Switch Connection Between Two Ports**
- **TTL-Compatible Input Levels**
- **Package Options Include Plastic 300-mil Shrink Small-Outline (DL), Thin Shrink Small-Outline (DGG), and Thin Very Small-Outline (DGV) Packages**

description

The SN74CBTR16211 provides 24 bits of high-speed TTL-compatible bus switching. The low on-state resistance of the switch allows connections to be made with minimal propagation delay.

The device operates as a dual 12-bit bus switch or single 24-bit bus switch. When $1\overline{OE}$ is low, 1A is connected to 1B. When $2\overline{OE}$ is low, 2A is connected to 2B.

The device has equivalent 25-Ω series resistors to reduce signal-reflection noise. This eliminates the need for external terminating resistors.

The SN74CBTR16211 is characterized for operation from –40°C to 85°C.

FUNCTION TABLE
(each 12-bit bus switch)

INPUTS		INPUTS/OUTPUTS	
$1\overline{OE}$	$2\overline{OE}$	1A, 1B	2A, 2B
L	L	1A = 1B	2A = 2B
L	H	1A = 1B	Z
H	L	Z	2A = 2B
H	H	Z	Z

DGG, DGV, OR DL PACKAGE
(TOP VIEW)

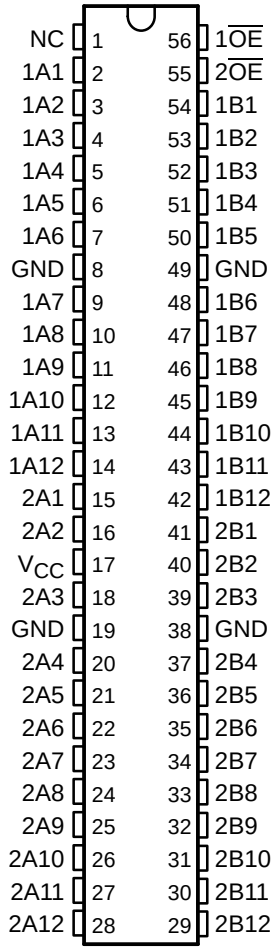

NC – No internal connection

PRODUCT PREVIEW

PRODUCT PREVIEW information concerns products in the formative or design phase of development. Characteristic data and other specifications are design goals. Texas Instruments reserves the right to change or discontinue these products without notice.

Copyright © 1998, Texas Instruments Incorporated

logic diagram (positive logic)

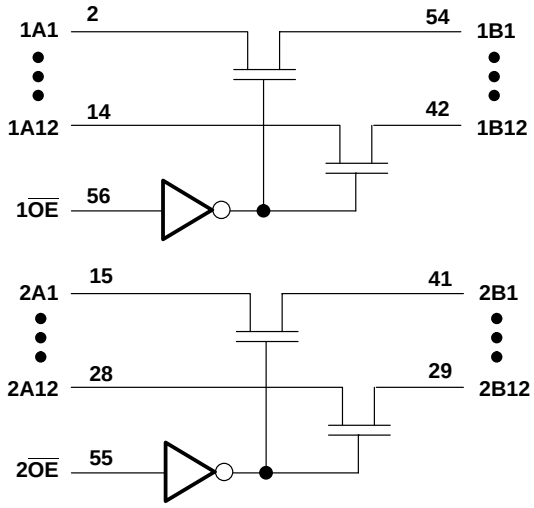

absolute maximum ratings over operating free-air temperature range (unless otherwise noted)†

Supply voltage range, V_{CC}	–0.5 V to 7 V
Input voltage range, V_I (see Note 1)	–0.5 V to 7 V
Continuous channel current	128 mA
Input clamp current, I_{IK} ($V_I < 0$)	–50 mA
Package thermal impedance, θ_{JA} (see Note 2): DGG package	81°C/W
DGV package	86°C/W
DL package	74°C/W
Storage temperature range, T_{stg}	–65°C to 150°C

† Stresses beyond those listed under "absolute maximum ratings" may cause permanent damage to the device. These are stress ratings only, and functional operation of the device at these or any other conditions beyond those indicated under "recommended operating conditions" is not implied. Exposure to absolute-maximum-rated conditions for extended periods may affect device reliability.

NOTES: 1. The input and output negative-voltage ratings may be exceeded if the input and output clamp-current ratings are observed.
2. The package thermal impedance is calculated in accordance with JESD 51.

recommended operating conditions (see Note 3)

		MIN	MAX	UNIT
V_{CC}	Supply voltage	4.5	5.5	V
V_{IH}	High-level control input voltage	2		V
V_{IL}	Low-level control input voltage		0.8	V
T_A	Operating free-air temperature	–40	85	°C

NOTE 3: All unused control inputs of the device must be held at V_{CC} or GND to ensure proper device operation. Refer to the TI application report, *Implications of Slow or Floating CMOS Inputs*, literature number SCBA004.

PRODUCT PREVIEW

electrical characteristics over recommended operating free-air temperature range (unless otherwise noted)

PARAMETER		TEST CONDITIONS			MIN	TYP†	MAX	UNIT
V_{IK}		V_{CC} = 4.5 V,	I_I = –18 mA				–1.2	V
I_I		V_{CC} = 0 V,	V_I = 5.5 V				10	µA
		V_{CC} = 5.5 V,	V_I = 5.5 V or GND				±1	
I_{CC}		V_{CC} = 5.5 V,	I_O = 0,	V_I = V_{CC} or GND			3	µA
ΔI_{CC}‡	Control inputs	V_{CC} = 5.5 V,	One input at 3.4 V,	Other inputs at V_{CC} or GND			2.5	mA
C_i	Control inputs	V_I = 3 V or 0						pF
$C_{io(OFF)}$		V_O = 3 V or 0,	$\overline{OE}$ = V_{CC}					pF
r_{on}§		V_{CC} = 4.5 V	V_I = 0	I_I = 64 mA				Ω
				I_I = 30 mA				
			V_I = 2.4 V,	I_I = 15 mA				

† All typical values are at V_{CC} = 5 V (unless otherwise noted), T_A = 25°C.
‡ This is the increase in supply current for each input that is at the specified TTL voltage level rather than V_{CC} or GND.
§ Measured by the voltage drop between the A and B terminals at the indicated current through the switch. On-state resistance is determined by the lowest voltage of the two (A or B) terminals.

switching characteristics over recommended operating free-air temperature range, C_L = 50 pF (unless otherwise noted) (see Figure 1)

PARAMETER	FROM (INPUT)	TO (OUTPUT)	MIN	MAX	UNIT
t_{pd}¶	A or B	B or A			ns
t_{en}	$\overline{OE}$	A or B			ns
t_{dis}	$\overline{OE}$	A or B			ns

¶ The propagation delay is the calculated RC time constant of the typical on-state resistance of the switch and the specified load capacitance, when driven by an ideal voltage source (zero output impedance).

PRODUCT PREVIEW

PARAMETER MEASUREMENT INFORMATION

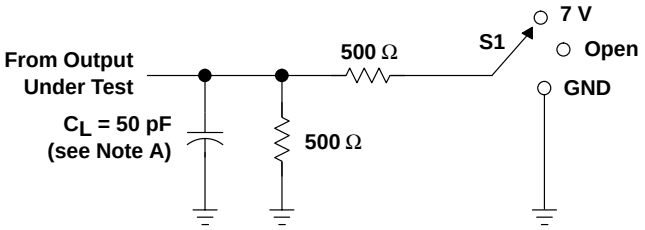

LOAD CIRCUIT

TEST	S1
t_{pd}	Open
t_{PLZ}/t_{PZL}	7 V
t_{PHZ}/t_{PZH}	Open

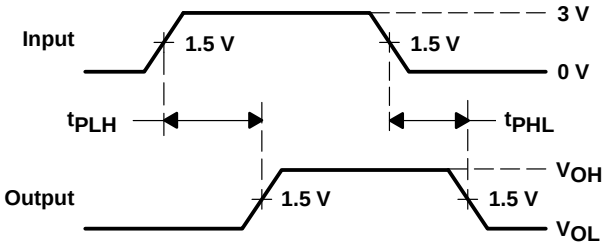

VOLTAGE WAVEFORMS
PROPAGATION DELAY TIMES

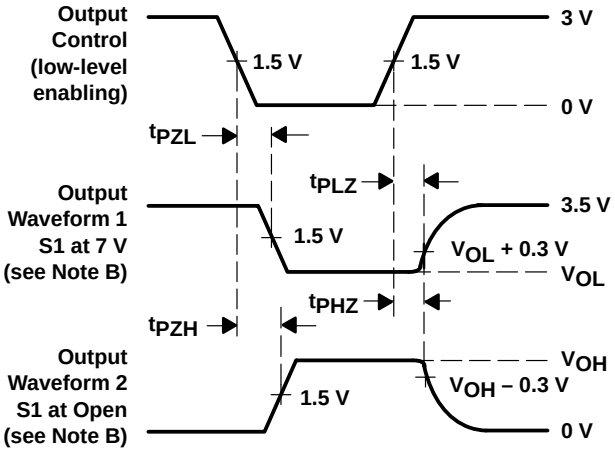

VOLTAGE WAVEFORMS
ENABLE AND DISABLE TIMES

NOTES:
A. C_L includes probe and jig capacitance.
B. Waveform 1 is for an output with internal conditions such that the output is low except when disabled by the output control. Waveform 2 is for an output with internal conditions such that the output is high except when disabled by the output control.
C. All input pulses are supplied by generators having the following characteristics: PRR ≤ 10 MHz, Z_O = 50 Ω, t_r ≤ 2.5 ns, t_f ≤ 2.5 ns.
D. The outputs are measured one at a time with one transition per measurement.
E. t_{PLZ} and t_{PHZ} are the same as t_{dis}.
F. t_{PZL} and t_{PZH} are the same as t_{en}.
G. t_{PLH} and t_{PHL} are the same as t_{pd}.

Figure 1. Load Circuit and Voltage Waveforms

PRODUCT PREVIEW

- **5-Ω Switch Connection Between Two Ports**
- **TTL-Compatible Input Levels**
- **Latch-Up Performance Exceeds 250 mA Per JESD 17**
- **ESD Protection Exceeds 2000 V Per MIL-STD-833, Method 3015; Exceeds 200 V Using Machine Model (C = 200 pF, R = 0)**
- **Package Options Include Plastic Thin Shrink Small-Outline (DGG), Thin Very Small-Outline (DGV), and Shrink Small-Outline (DL) Packages, and Ceramic Flat (WD) Package**

SN54CBT16212A . . . WD PACKAGE
SN74CBT16212A . . . DGG, DGV, OR DL PACKAGE
(TOP VIEW)

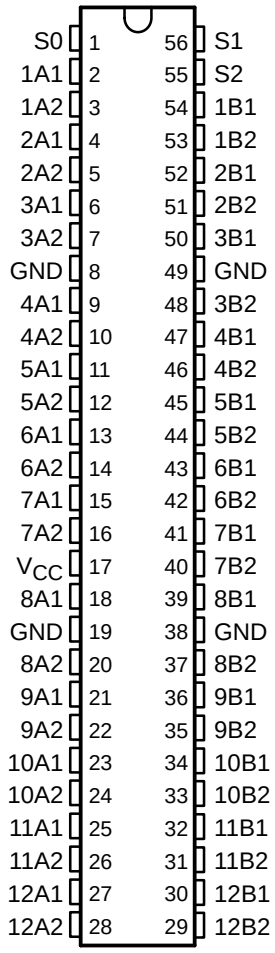

description

The ’CBT16212A devices provide 24 bits of high-speed TTL-compatible bus switching or exchanging. The low on-state resistance of the switch allows connections to be made with minimal propagation delay.

Each device operates as a 24-bit bus switch or a 12-bit bus exchanger, which provides data exchanging between the four signal ports via the data-select (S0, S1, S2) terminals.

The SN54CBT16212A is characterized for operation over the full military temperature range of –55°C to 125°C. The SN74CBT16212A is characterized for operation from –40°C to 85°C.

FUNCTION TABLE

INPUTS			INPUTS/OUTPUTS		FUNCTION
S2	S1	S0	A1	A2	
L	L	L	Z	Z	Disconnect
L	L	H	B1 port	Z	A1 port = B1 port
L	H	L	B2 port	Z	A1 port = B2 port
L	H	H	Z	B1 port	A2 port = B1 port
H	L	L	Z	B2 port	A2 port = B2 port
H	L	H	Z	Z	Disconnect
H	H	L	B1 port	B2 port	A1 port = B1 port A2 port = B2 port
H	H	H	B2 port	B1 port	A1 port = B2 port A2 port = B1 port

PRODUCTION DATA information is current as of publication date. Products conform to specifications per the terms of Texas Instruments standard warranty. Production processing does not necessarily include testing of all parameters.

Copyright © 1998, Texas Instruments Incorporated
On products compliant to MIL-PRF-38535, all parameters are tested unless otherwise noted. On all other products, production processing does not necessarily include testing of all parameters.

logic diagram (positive logic)

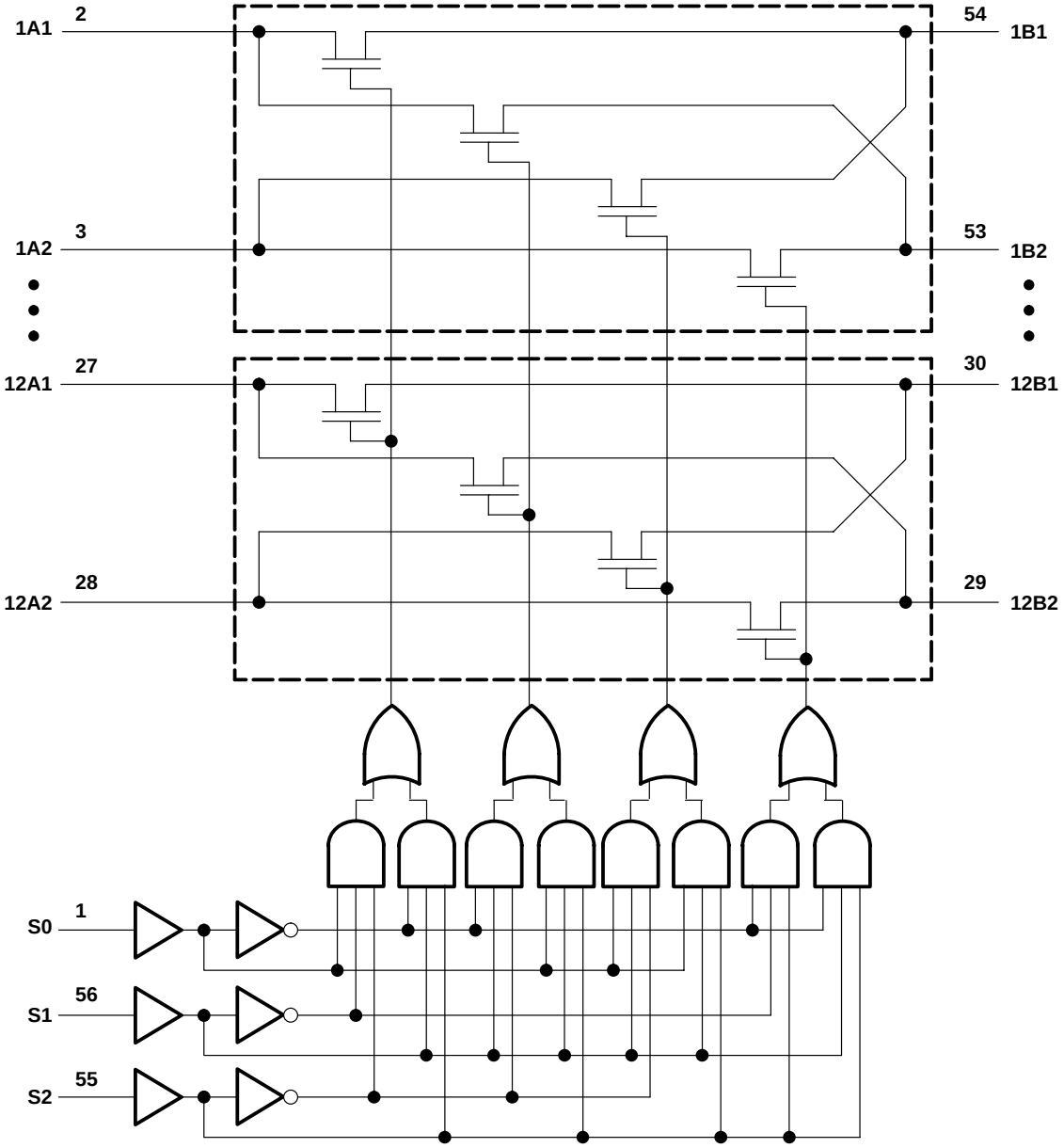

Pin numbers shown are for the DGG, DGV, and DL packages.

absolute maximum ratings over operating free-air temperature range (unless otherwise noted)†

Supply voltage range, V_{CC} . . . . . –0.5 V to 7 V
Input voltage range, V_I (see Note 1) . . . . . –0.5 V to 7 V
Continuous channel current . . . . . 128 mA
Input clamp current, I_{IK} (V_I < 0) . . . . . –50 mA
Package thermal impedance, θ_{JA} (see Note 2): DGG package . . . . . 81°C/W
DGV package . . . . . 86°C/W
DL package . . . . . 74°C/W
Storage temperature range, T_{stg} . . . . . –65°C to 150°C

† Stresses beyond those listed under "absolute maximum ratings" may cause permanent damage to the device. These are stress ratings only, and functional operation of the device at these or any other conditions beyond those indicated under "recommended operating conditions" is not implied. Exposure to absolute-maximum-rated conditions for extended periods may affect device reliability.

NOTES: 1. The input and output negative-voltage ratings may be exceeded if the input and output clamp-current ratings are observed.
2. The package thermal impedance is calculated in accordance with JESD 51.

recommended operating conditions (see Note 3)

		SN54CBT16212A		SN74CBT16212A		UNIT
		MIN	MAX	MIN	MAX	
V_{CC}	Supply voltage	4	5.5	4	5.5	V
V_{IH}	High-level control input voltage	2		2		V
V_{IL}	Low-level control input voltage		0.8		0.8	V
T_A	Operating free-air temperature	–55	125	–40	85	°C

NOTE 3: All unused control inputs of the device must be held at V_{CC} or GND to ensure proper device operation. Refer to the TI application report, *Implications of Slow or Floating CMOS Inputs*, literature number SCBA004.

electrical characteristics over recommended operating free-air temperature range (unless otherwise noted)

PARAMETER		TEST CONDITIONS			SN54CBT16212A			SN74CBT16212A			UNIT
					MIN	TYP‡	MAX	MIN	TYP‡	MAX	
V_{IK}		V_{CC} = 4.5 V,	I_I = –18 mA				–1.2			–1.2	V
I_I		V_{CC} = 0,	V_I = 5.5 V				10			10	µA
		V_{CC} = 5.5 V,	V_I = 5.5 V or GND				±1			±1	
I_{CC}		V_{CC} = 5.5 V, V_I = V_{CC} or GND	I_O = 0,				3.2			3	µA
ΔI_{CC}§	Control inputs	V_{CC} = 5.5 V, Other inputs at V_{CC} or GND	One input at 3.4 V,				2.5			2.5	mA
C_i	Control inputs	V_I = 3 V or 0				2.5			2.5		pF
$C_{io(OFF)}$		V_O = 3 V or 0,	S0, S1, or S2 = V_{CC}			7.5			7.5		pF
r_{on}¶		V_{CC} = 4 V, TYP at V_{CC} = 4 V	V_I = 2.4 V,	I_I = 15 mA		14	20		14	20	Ω
		V_{CC} = 4.5 V	V_I = 0	I_I = 64 mA		4	10		4	7	
				I_I = 30 mA		4	10		4	7	
			V_I = 2.4 V,	I_I = 15 mA		6	14		6	12	

‡ All typical values are at V_{CC} = 5 V (unless otherwise noted), T_A = 25°C.
§ This is the increase in supply current for each input that is at the specified TTL voltage level rather than V_{CC} or GND.
¶ Measured by the voltage drop between the A and B terminals at the indicated current through the switch. On-state resistance is determined by the lower of the voltages of the two (A or B) terminals.

switching characteristics over recommended operating free-air temperature range, C_L = 50 pF (unless otherwise noted) (see Figure 1)

PARAMETER	FROM (INPUT)	TO (OUTPUT)	SN54CBT16212A				SN74CBT16212A				UNIT
			V_{CC} = 4 V		V_{CC} = 5 V ± 0.5 V		V_{CC} = 4 V		V_{CC} = 5 V ± 0.5 V		
			MIN	MAX	MIN	MAX	MIN	MAX	MIN	MAX	
t_{pd}†	A or B	B or A				0.8*		0.35		0.25	ns
t_{pd}	S	A or B		14	1.5	13		10	1.5	9.1	ns
t_{en}	S	A or B		15	1.5	13.7		10.4	1.5	9.7	ns
t_{dis}	S	A or B		14.2	1.5	13.5		9.2	1.5	8.8	ns

* On products compliant to MIL-PRF-38535, this parameter is not production tested.

† The propagation delay is the calculated RC time constant of the typical on-state resistance of the switch and the specified load capacitance, when driven by an ideal voltage source (zero output impedance).

PARAMETER MEASUREMENT INFORMATION

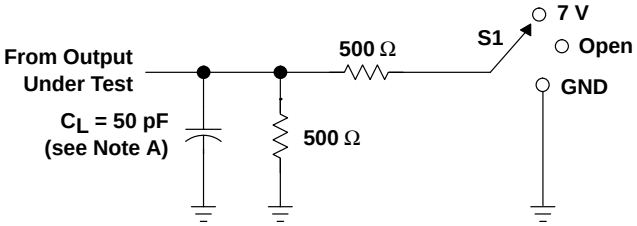

LOAD CIRCUIT

TEST	S1
t_{pd}	Open
t_{PLZ}/t_{PZL}	7 V
t_{PHZ}/t_{PZH}	Open

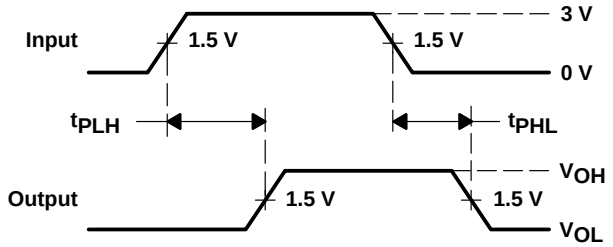

VOLTAGE WAVEFORMS
PROPAGATION DELAY TIMES

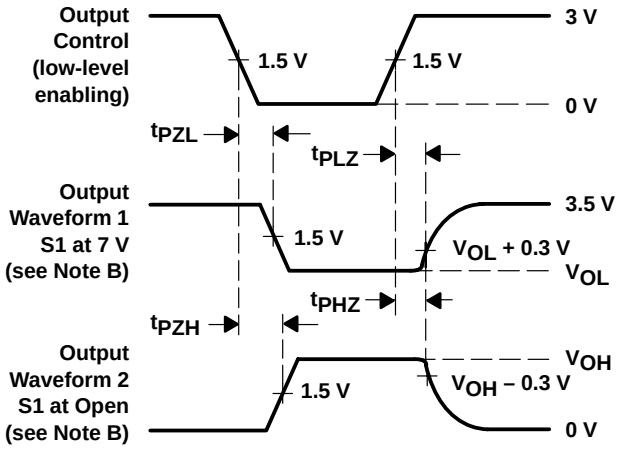

VOLTAGE WAVEFORMS
ENABLE AND DISABLE TIMES

NOTES: A. C_L includes probe and jig capacitance.
B. Waveform 1 is for an output with internal conditions such that the output is low except when disabled by the output control. Waveform 2 is for an output with internal conditions such that the output is high except when disabled by the output control.
C. All input pulses are supplied by generators having the following characteristics: PRR ≤ 10 MHz, Z_O = 50 Ω, t_r ≤ 2.5 ns, t_f ≤ 2.5 ns.
D. The outputs are measured one at a time with one transition per measurement.
E. t_{PLZ} and t_{PHZ} are the same as t_{dis}.
F. t_{PZL} and t_{PZH} are the same as t_{en}.
G. t_{PLH} and t_{PHL} are the same as t_{pd}.

Figure 1. Load Circuit and Voltage Waveforms

- **25-Ω Switch Connection Between Two Ports**
- **TTL-Compatible Input Levels**
- **Package Options Include Plastic Thin Shrink Small-Outline (DGG), Thin Very Small-Outline (DGV), and 300-mil Shrink Small-Outline (DL) Packages**

DGG, DGV, OR DL PACKAGE
(TOP VIEW)

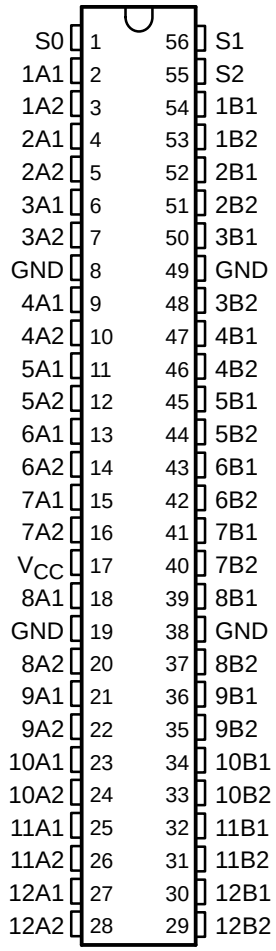

description

The SN74CBTR16212 provides 24 bits of high-speed TTL-compatible bus switching or exchanging. The low on-state resistance of the switch allows connections to be made with minimal propagation delay.

The device operates as a 24-bit bus switch or a 12-bit bus exchanger, which provides data exchanging between the four signal ports via the data-select (S0–S2) terminals.

The device has equivalent 25-Ω series resistors to reduce signal-reflection noise. This eliminates the need for external terminating resistors.

The SN74CBTR16212 is characterized for operation from –40°C to 85°C.

FUNCTION TABLE

INPUTS			INPUTS/OUTPUTS		FUNCTION
S2	S1	S0	A1	A2	
L	L	L	Z	Z	Disconnect
L	L	H	B1 port	Z	A1 port = B1 port
L	H	L	B2 port	Z	A1 port = B2 port
L	H	H	Z	B1 port	A2 port = B1 port
H	L	L	Z	B2 port	A2 port = B2 port
H	L	H	Z	Z	Disconnect
H	H	L	B1 port	B2 port	A1 port = B1 port A2 port = B2 port
H	H	H	B2 port	B1 port	A1 port = B2 port A2 port = B1 port

PRODUCT PREVIEW

PRODUCT PREVIEW information concerns products in the formative or design phase of development. Characteristic data and other specifications are design goals. Texas Instruments reserves the right to change or discontinue these products without notice.

Copyright © 1998, Texas Instruments Incorporated

logic diagram (positive logic)

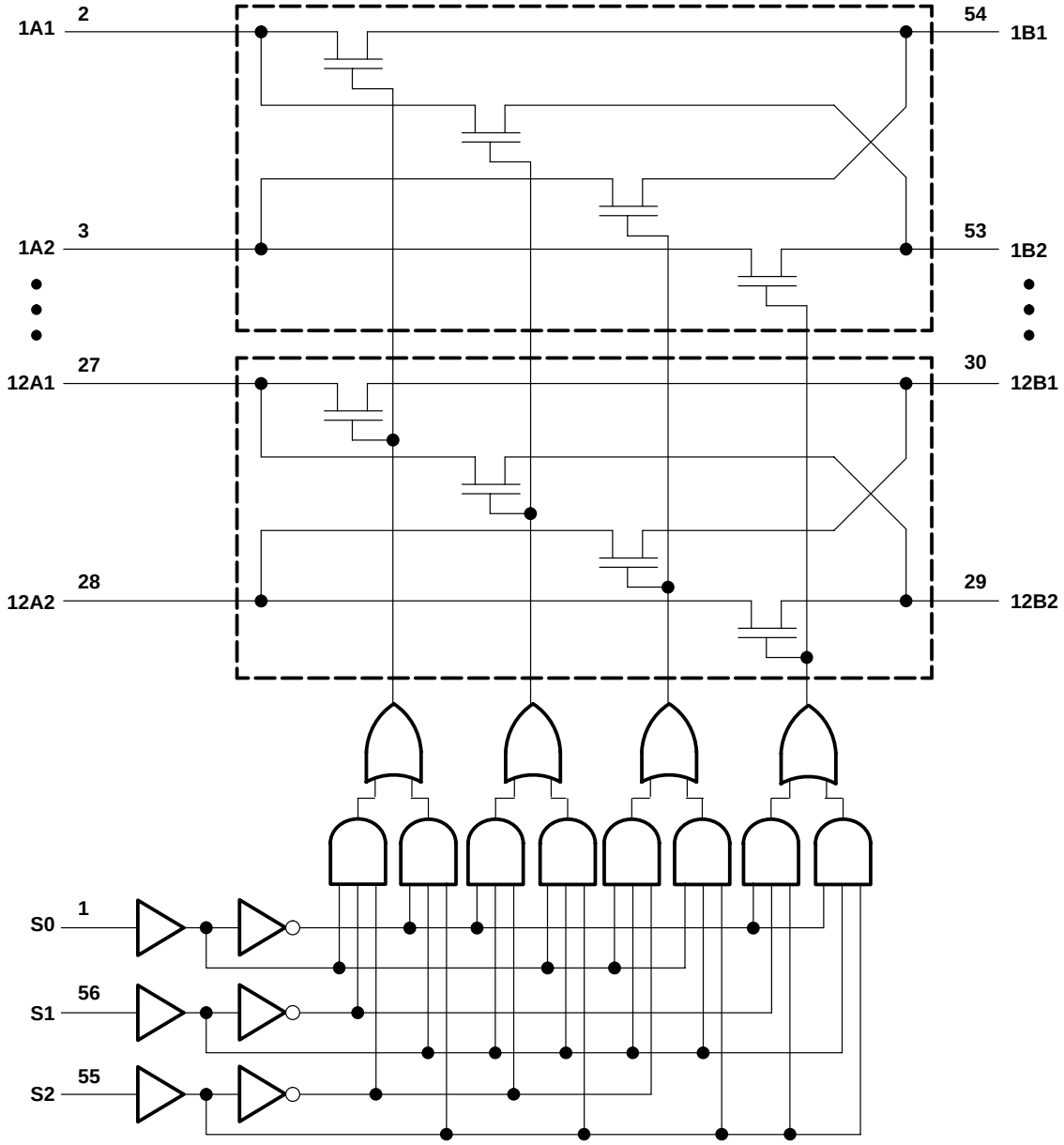

PRODUCT PREVIEW

absolute maximum ratings over operating free-air temperature range (unless otherwise noted)†

Supply voltage range, V_{CC} . . . . . –0.5 V to 7 V
Input voltage range, V_I (see Note 1) . . . . . –0.5 V to 7 V
Continuous channel current . . . . . 128 mA
Input clamp current, I_{IK} (V_I < 0) . . . . . –50 mA
Package thermal impedance, θ_{JA} (see Note 2): DGG package . . . . . 81°C/W
DGV package . . . . . 86°C/W
DL package . . . . . 74°C/W
Storage temperature range, T_{stg} . . . . . –65°C to 150°C

† Stresses beyond those listed under "absolute maximum ratings" may cause permanent damage to the device. These are stress ratings only, and functional operation of the device at these or any other conditions beyond those indicated under "recommended operating conditions" is not implied. Exposure to absolute-maximum-rated conditions for extended periods may affect device reliability.

NOTES: 1. The input and output negative-voltage ratings may be exceeded if the input and output clamp-current ratings are observed.
2. The package thermal impedance is calculated in accordance with JESD 51.

recommended operating conditions (see Note 3)

		MIN	MAX	UNIT
V_{CC}	Supply voltage	4.5	5.5	V
V_{IH}	High-level control input voltage	2		V
V_{IL}	Low-level control input voltage		0.8	V
T_A	Operating free-air temperature	–40	85	°C

NOTE 3: All unused control inputs of the device must be held at V_{CC} or GND to ensure proper device operation. Refer to the TI application report, *Implications of Slow or Floating CMOS Inputs*, literature number SCBA004.

electrical characteristics over recommended operating free-air temperature range (unless otherwise noted)

PARAMETER		TEST CONDITIONS			MIN	TYP‡	MAX	UNIT
V_{IK}		V_{CC} = 4.5 V,	I_I = –18 mA				–1.2	V
I_I		V_{CC} = 0,	V_I = 5.5 V				10	µA
		V_{CC} = 5.5 V,	V_I = 5.5 V or GND				±1	
I_{CC}		V_{CC} = 5.5 V,	I_O = 0,	V_I = V_{CC} or GND			3	µA
ΔI_{CC}§	Control inputs	V_{CC} = 5.5 V,	One input at 3.4 V,	Other inputs at V_{CC} or GND			2.5	mA
C_i	Control inputs	V_I = 3 V or 0						pF
$C_{io(OFF)}$		V_O = 3 V or 0,	S0, S1, or S2 = V_{CC}					pF
r_{on}¶		V_{CC} = 4.5 V	V_I = 0	I_I = 64 mA				Ω
				I_I = 30 mA				
			V_I = 2.4 V,	I_I = 15 mA				

‡ All typical values are at V_{CC} = 5 V (unless otherwise noted), T_A = 25°C.
§ This is the increase in supply current for each input that is at the specified TTL voltage level rather than V_{CC} or GND.
¶ Measured by the voltage drop between the A and B terminals at the indicated current through the switch. On-state resistance is determined by the lower of the voltages of the two (A or B) terminals.

PRODUCT PREVIEW

PRODUCT PREVIEW

switching characteristics over recommended operating free-air temperature range, C_L = 50 pF (unless otherwise noted) (see Figure 1)

PARAMETER	FROM (INPUT)	TO (OUTPUT)	MIN	MAX	UNIT
t_{pd}†	A or B	B or A			ns
t_{pd}	S	A or B			ns
t_{en}	S	A or B			ns
t_{dis}	S	A or B			ns

† The propagation delay is the calculated RC time constant of the typical on-state resistance of the switch and the specified load capacitance, when driven by an ideal voltage source (zero output impedance).

PARAMETER MEASUREMENT INFORMATION

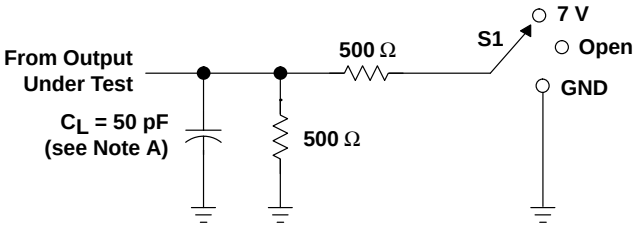

LOAD CIRCUIT

TEST	S1
t_{pd}	Open
t_{PLZ}/t_{PZL}	7 V
t_{PHZ}/t_{PZH}	Open

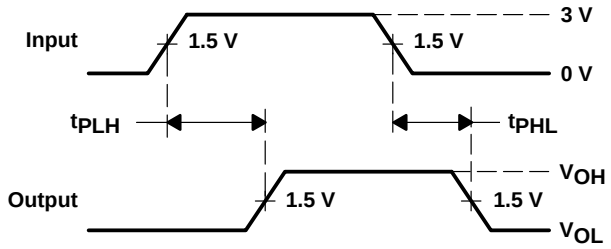

VOLTAGE WAVEFORMS
PROPAGATION DELAY TIMES

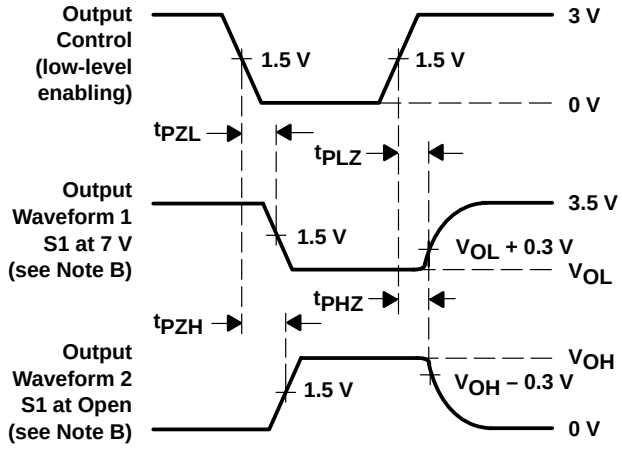

VOLTAGE WAVEFORMS
ENABLE AND DISABLE TIMES

NOTES:
A. C_L includes probe and jig capacitance.
B. Waveform 1 is for an output with internal conditions such that the output is low except when disabled by the output control. Waveform 2 is for an output with internal conditions such that the output is high except when disabled by the output control.
C. All input pulses are supplied by generators having the following characteristics: PRR ≤ 10 MHz, Z_O = 50 Ω, t_r ≤ 2.5 ns, t_f ≤ 2.5 ns.
D. The outputs are measured one at a time with one transition per measurement.
E. t_{PLZ} and t_{PHZ} are the same as t_{dis}.
F. t_{PZL} and t_{PZH} are the same as t_{en}.
G. t_{PLH} and t_{PHL} are the same as t_{pd}.

Figure 1. Load Circuit and Voltage Waveforms

- **5-Ω Switch Connection Between Two Ports**
- **TTL-Compatible Input Levels**
- **Package Options Include Plastic Thin Shrink Small-Outline (DGG), Thin Very Small-Outline (DGV), and 300-mil Shrink Small-Outline (DL) Packages**

DGG, DGV, OR DL PACKAGE
(TOP VIEW)

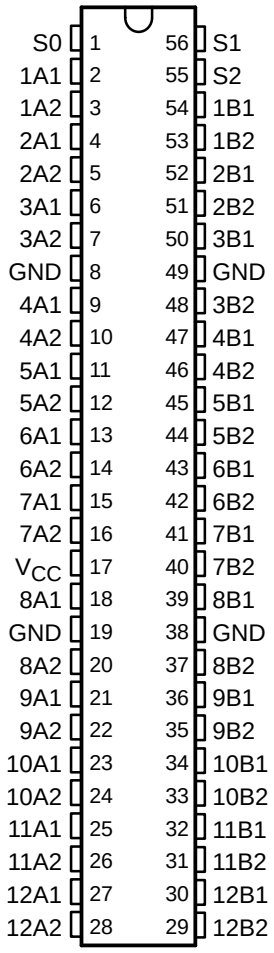

description

The SN74CBT16213 provides 24 bits of high-speed TTL-compatible bus switching or exchanging. The low on-state resistance of the switch allows connections to be made with minimal propagation delay.

The device operates as a 24-bit bus switch or a 12-bit bus exchanger that provides data exchanging between the four signal ports via the data-select (S0–S2) terminals.

The SN74CBT16213 is characterized for operation from –40°C to 85°C.

FUNCTION TABLE

INPUTS			INPUTS/OUTPUTS		FUNCTION
S2	S1	S0	A1	A2	
L	L	L	Z	Z	Disconnect
L	L	H	B1	Z	A1 port = B1 port
L	H	L	B2	Z	A1 port = B2 port
L	H	H	Z	B1	A2 port = B1 port
H	L	L	Z	B2	A2 port = B2 port
H	L	H	A2 and B2	A1 and B2	A1 port = A2 port = B2 port
H	H	L	B1	B2	A1 port = B1 port A2 port = B2 port
H	H	H	B2	B1	A1 port = B2 port A2 port = B1 port

PRODUCTION DATA information is current as of publication date. Products conform to specifications per the terms of Texas Instruments standard warranty. Production processing does not necessarily include testing of all parameters.

Copyright © 1998, Texas Instruments Incorporated

logic diagram (positive logic)

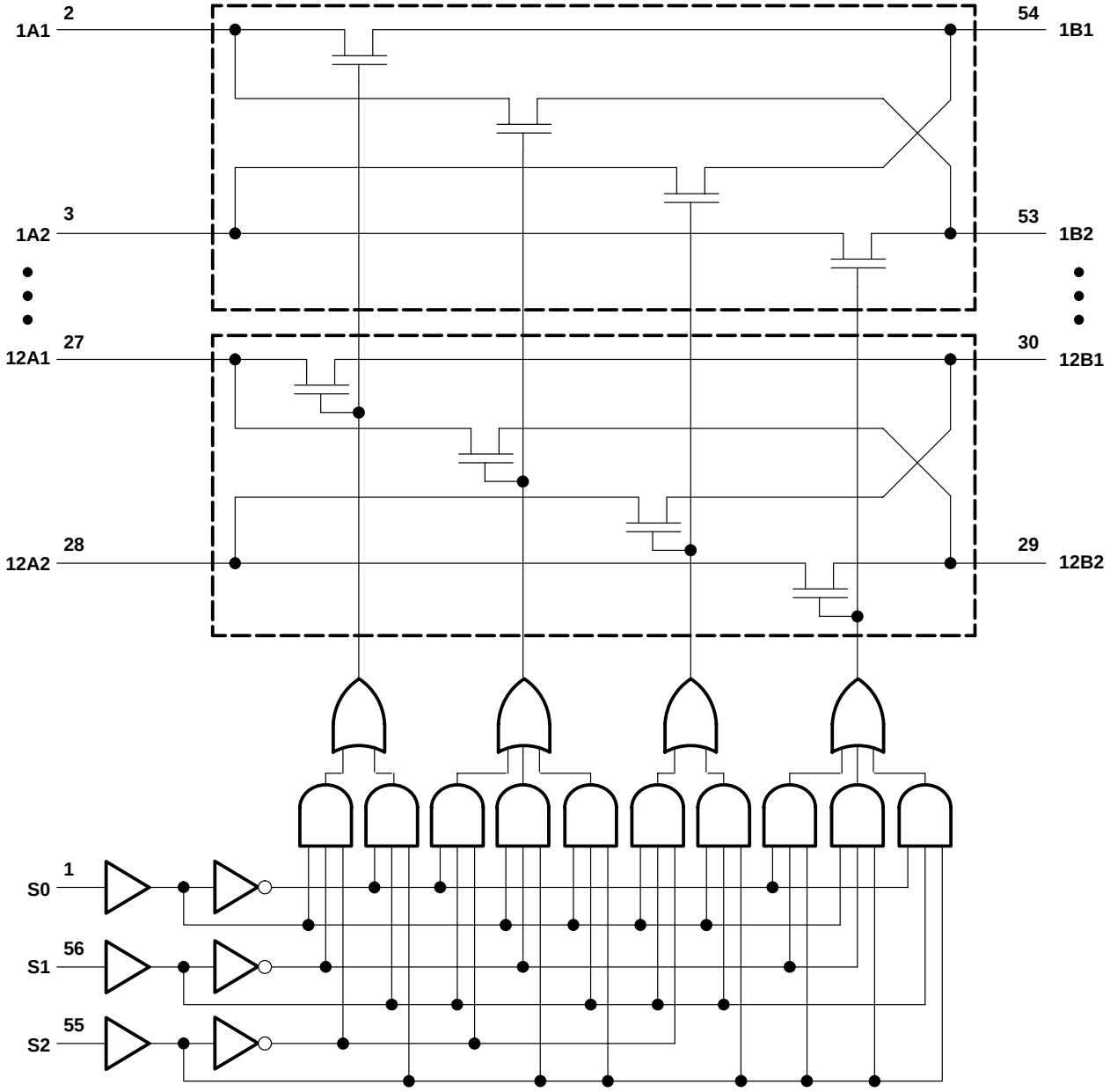

absolute maximum ratings over operating free-air temperature range (unless otherwise noted)†

Supply voltage range, V_{CC} . . . . . –0.5 V to 7 V
Input voltage range, V_I (see Note 1) . . . . . –0.5 V to 7 V
Continuous channel current . . . . . 128 mA
Input clamp current, I_{IK} (V_I < 0) . . . . . –50 mA
Package thermal impedance, θ_{JA} (see Note 2): DGG package . . . . . 81°C/ W
DGV package . . . . . 86°C/W
DL package . . . . . 74°C/W
Storage temperature range, T_{stg} . . . . . –65°C to 150°C

† Stresses beyond those listed under "absolute maximum ratings" may cause permanent damage to the device. These are stress ratings only, and functional operation of the device at these or any other conditions beyond those indicated under "recommended operating conditions" is not implied. Exposure to absolute-maximum-rated conditions for extended periods may affect device reliability.

NOTES: 1. The input and output negative-voltage ratings may be exceeded if the input and output clamp-current ratings are observed.
2. The package thermal impedance is calculated in accordance with JESD 51.

recommended operating conditions (see Note 3)

		MIN	MAX	UNIT
V_{CC}	Supply voltage	4	5.5	V
V_{IH}	High-level control input voltage	2		V
V_{IL}	Low-level control input voltage		0.8	V
T_A	Operating free-air temperature	–40	85	°C

NOTE 3: All unused control inputs of the device must be held at V_{CC} or GND to ensure proper device operation. Refer to the TI application report, *Implications of Slow or Floating CMOS inputs*, literature number SCBA004.

electrical characteristics over recommended operating free-air temperature range (unless otherwise noted)

PARAMETER		TEST CONDITIONS			MIN	TYP‡	MAX	UNIT
V_{IK}		V_{CC} = 4.5 V,	I_I = –18 mA				–1.2	V
I_I		V_{CC} = 0,	V_I = 5.5 V				10	µA
		V_{CC} = 5.5 V,	V_I = 5.5 V or GND				±1	
I_{CC}		V_{CC} = 5.5 V,	I_O = 0,	V_I = V_{CC} or GND			3	µA
ΔI_{CC}§	Control inputs	V_{CC} = 5.5 V,	One input at 3.4 V,	Other inputs at V_{CC} or GND			2.5	mA
C_i	Control inputs	V_I = 3 V or 0				4.5		pF
$C_{io(OFF)}$	B port	V_O = 3 V or 0,	S0, S1, or S2 = V_{CC}			8.5		pF
	A port					8		
r_{on}¶	A to B or B to A	V_{CC} = 4 V, TYP at V_{CC} = 4 V	V_I = 2.4 V,	I_I = 15 mA		14	20	Ω
		V_{CC} = 4.5 V	V_I = 0	I_I = 64 mA		5	7	
				I_I = 30 mA		5	7	
			V_I = 2.4 V,	I_I = 15 mA		8	15	
	A1 to A2	V_{CC} = 4 V, TYP at V_{CC} = 4 V	V_I = 2.4 V,	I_I = 15 mA		22	30	
		V_{CC} = 4.5 V	V_I = 0	I_I = 64 mA		10	14	
				I_I = 30 mA		10	14	
			V_I = 2.4 V,	I_I = 15 mA		16	22	

‡ All typical values are at V_{CC} = 5 V (unless otherwise noted), T_A = 25°C.
§ This is the increase in supply current for each input that is at the specified TTL voltage level rather than V_{CC} or GND.
¶ Measured by the voltage drop between the A and B terminals at the indicated current through the switch. On-state resistance is determined by the lower of the voltages of the two (A or B) terminals.

switching characteristics over recommended operating free-air temperature range, C_L = 50 pF (unless otherwise noted) (see Figure 1)

PARAMETER	FROM (INPUT)	TO (OUTPUT)	V_{CC} = 4 V		V_{CC} = 5 V ± 0.5 V		UNIT
			MIN	MAX	MIN	MAX	
t_{pd}†	A or B	B or A		0.35		0.25	ns
	A1	A2		0.5		0.5	
t_{en}	S	A or B		12.4	3.2	11.1	ns
t_{dis}	S	A or B		12.4	2.3	11.9	ns
t_{en}	S0	A2 and B2		11.5	4	10.9	ns
t_{dis}	S0	A2 and B2		12.8	5.7	12	ns

† The propagation delay is the calculated RC time constant of the typical on-state resistance of the switch and the specified load capacitance, when driven by an ideal voltage source (zero output impedance).

PARAMETER MEASUREMENT INFORMATION

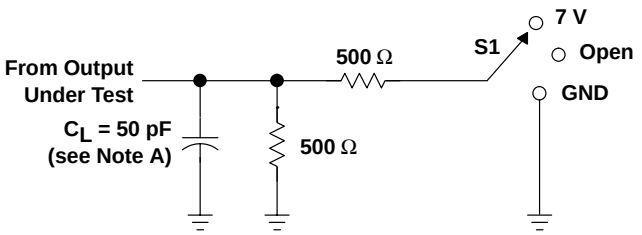

LOAD CIRCUIT

TEST	S1
t_{pd}	Open
t_{PLZ}/t_{PZL}	7 V
t_{PHZ}/t_{PZH}	Open

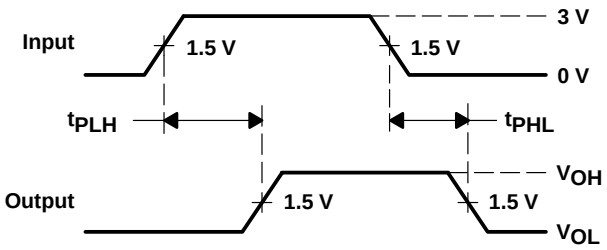

VOLTAGE WAVEFORMS
PROPAGATION DELAY TIMES

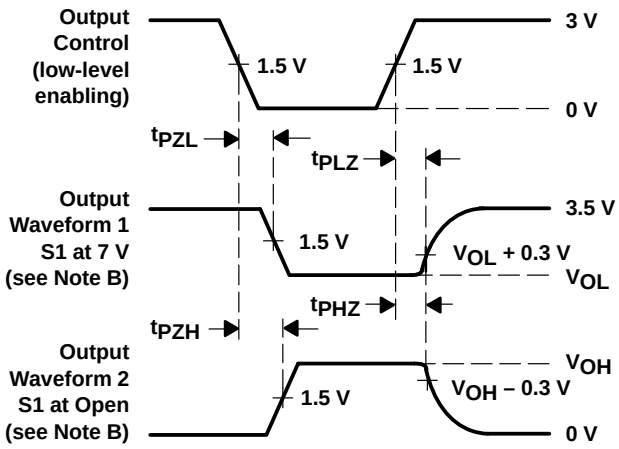

VOLTAGE WAVEFORMS
ENABLE AND DISABLE TIMES

NOTES:
A. C_L includes probe and jig capacitance.
B. Waveform 1 is for an output with internal conditions such that the output is low except when disabled by the output control. Waveform 2 is for an output with internal conditions such that the output is high except when disabled by the output control.
C. All input pulses are supplied by generators having the following characteristics: PRR ≤ 10 MHz, Z_O = 50 Ω, t_r ≤ 2.5 ns, t_f ≤ 2.5 ns.
D. The outputs are measured one at a time with one transition per measurement.
E. t_{PLZ} and t_{PHZ} are the same as t_{dis}.
F. t_{PZL} and t_{PZH} are the same as t_{en}.
G. t_{PLH} and t_{PHL} are the same as t_{pd}.

Figure 1. Load Circuit and Voltage Waveforms

- **5-Ω Switch Connection Between Two Ports**
- **TTL-Compatible Input Levels**
- **Package Options Include Plastic Thin Shrink Small-Outline (DGG) and 300-mil Shrink Small-Outline (DL) Packages**

DGG OR DL PACKAGE
(TOP VIEW)

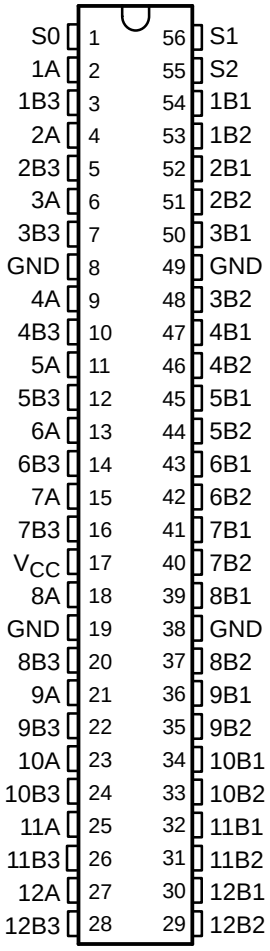

description

The SN74CBT16214 provides 12 bits of high-speed TTL-compatible bus switching between three separate ports. The low on-state resistance of the switch allows connections to be made with minimal propagation delay.

The device operates as a 12-bit bus-select switch via the data-select (S0–S2) terminals.

The SN74CBT16214 is characterized for operation from –40°C to 85°C.

FUNCTION TABLE

INPUTS			INPUT/OUTPUT A	FUNCTION
S2	S1	S0		
L	L	L	Z	Disconnect
L	L	H	B1	A port = B1 port
L	H	L	B2	A port = B2 port
L	H	H	Z	Disconnect
H	L	L	Z	Disconnect
H	L	H	B3	A port = B3 port
H	H	L	B1	A port = B1 port
H	H	H	B2	A port = B2 port

PRODUCTION DATA information is current as of publication date. Products conform to specifications per the terms of Texas Instruments standard warranty. Production processing does not necessarily include testing of all parameters.

Copyright © 1998, Texas Instruments Incorporated

logic diagram (positive logic)

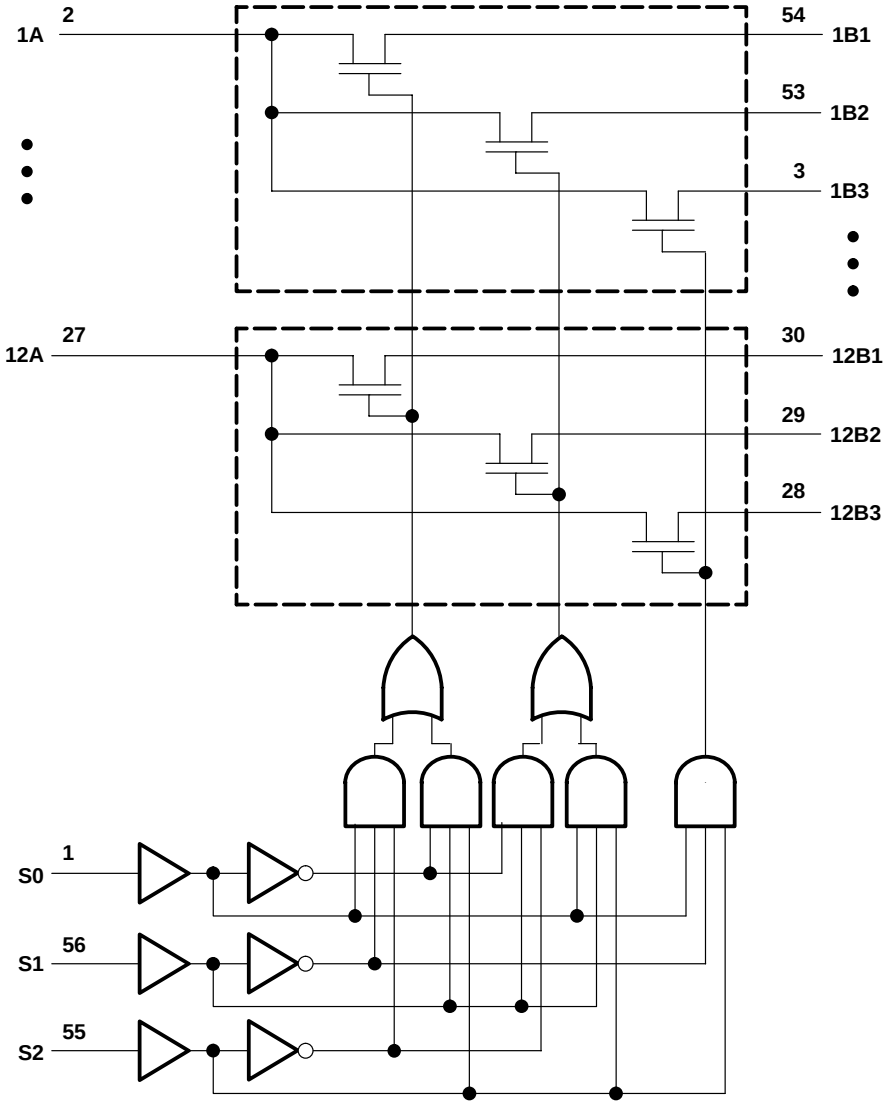

absolute maximum ratings over operating free-air temperature range (unless otherwise noted)†

Supply voltage range, V_{CC}	–0.5 V to 7 V
Input voltage range, V_I (see Note 1)	–0.5 V to 7 V
Continuous channel current	128 mA
Input clamp current, I_{IK} ($V_I < 0$)	–50 mA
Package thermal impedance, θ_{JA} (see Note 2): DGG package	81°C
DL package	74°C
Storage temperature range, T_{stg}	–65°C to 150°C

† Stresses beyond those listed under “absolute maximum ratings” may cause permanent damage to the device. These are stress ratings only, and functional operation of the device at these or any other conditions beyond those indicated under “recommended operating conditions” is not implied. Exposure to absolute-maximum-rated conditions for extended periods may affect device reliability.

NOTES: 1. The input and output negative-voltage ratings may be exceeded if the input and output clamp-current ratings are observed.
2. The package thermal impedance is calculated in accordance with JESD 51.

recommended operating conditions (see Note 3)

		MIN	MAX	UNIT
V_{CC}	Supply voltage	4	5.5	V
V_{IH}	High-level control input voltage	2		V
V_{IL}	Low-level control input voltage		0.8	V
T_A	Operating free-air temperature	–40	85	°C

NOTE 3: All unused control inputs of the device must be held at V_{CC} or GND to ensure proper device operation. Refer to the TI application report, *Implications of Slow or Floating CMOS Inputs*, literature number SCBA004.

electrical characteristics over recommended operating free-air temperature range (unless otherwise noted)

PARAMETER		TEST CONDITIONS			MIN	TYP†	MAX	UNIT
V_{IK}		V_{CC} = 4.5 V,	I_I = –18 mA				–1.2	V
I_I		V_{CC} = 0,	V_I = 5.5 V				10	µA
		V_{CC} = 5.5 V,	V_I = 5.5 V or GND				±1	
I_{CC}		V_{CC} = 5.5 V,	I_O = 0,	V_I = V_{CC} or GND			3	µA
ΔI_{CC}‡	Control inputs	V_{CC} = 5.5 V,	One input at 3.4 V,	Other inputs at V_{CC} or GND			2.5	mA
C_i	Control inputs	V_I = 3 V or 0				4		pF
$C_{io(OFF)}$		V_O = 3 V or 0,	A = Z			7.5		pF
r_{on}§		V_{CC} = 4 V, TYP at V_{CC} = 4 V	V_I = 2.4 V,	I_I = 15 mA				Ω
		V_{CC} = 4.5 V	V_I = 0	I_I = 64 mA		4	7	
				I_I = 30 mA		4	7	
			V_I = 2.4 V,	I_I = 15 mA		6	12	

† All typical values are at V_{CC} = 5 V (unless otherwise noted), T_A = 25°C.
‡ This is the increase in supply current for each input that is at the specified TTL voltage level rather than V_{CC} or GND.
§ Measured by the voltage drop between the A and B terminals at the indicated current through the switch. On-state resistance is determined by the lower of the voltages of the two (A or B) terminals.

switching characteristics over recommended operating free-air temperature range, C_L = 50 pF (unless otherwise noted) (see Figure 1)

PARAMETER	FROM (INPUT)	TO (OUTPUT)	V_{CC} = 4 V		V_{CC} = 5 V ± 0.5 V		UNIT
			MIN	MAX	MIN	MAX	
t_{pd}¶	A or B	B or A		0.35		0.25	ns
t_{pd}	S	B or A		15.3	5.5	13.9	ns
t_{en}	S	A or B		16	5.1	14.5	ns
t_{dis}	S	A or B		12.1	3.6	11.7	ns

¶ The propagation delay is the calculated RC time constant of the typical on-state resistance of the switch and the specified load capacitance, when driven by an ideal voltage source (zero output impedance).

PARAMETER MEASUREMENT INFORMATION

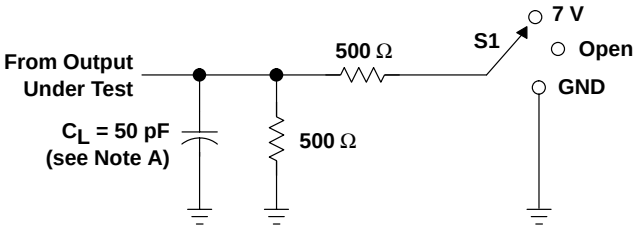

LOAD CIRCUIT

TEST	S1
t_{pd}	Open
t_{PLZ}/t_{PZL}	7 V
t_{PHZ}/t_{PZH}	Open

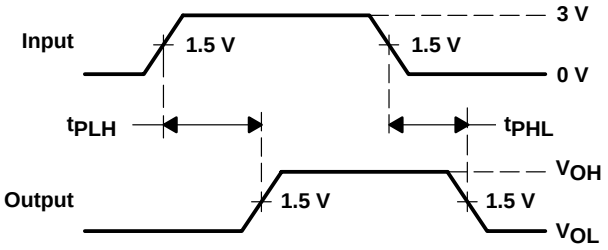

VOLTAGE WAVEFORMS
PROPAGATION DELAY TIMES

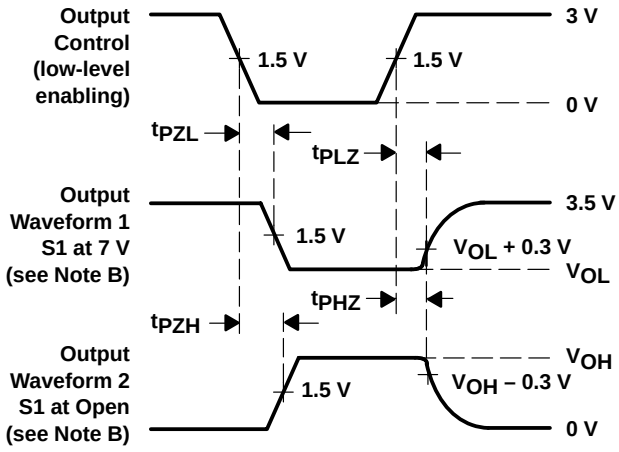

VOLTAGE WAVEFORMS
ENABLE AND DISABLE TIMES

NOTES:
A. C_L includes probe and jig capacitance.
B. Waveform 1 is for an output with internal conditions such that the output is low except when disabled by the output control. Waveform 2 is for an output with internal conditions such that the output is high except when disabled by the output control.
C. All input pulses are supplied by generators having the following characteristics: PRR ≤ 10 MHz, Z_O = 50 Ω, t_r ≤ 2.5 ns, t_f ≤ 2.5 ns.
D. The outputs are measured one at a time with one transition per measurement.
E. t_{PLZ} and t_{PHZ} are the same as t_{dis}.
F. t_{PZL} and t_{PZH} are the same as t_{en}.
G. t_{PLH} and t_{PHL} are the same as t_{pd}.

Figure 1. Load Circuit and Voltage Waveforms

SCDS009I – MAY 1995 – REVISED OCTOBER 1998

- **5-Ω Switch Connection Between Two Ports**
- **TTL-Compatible Input and Output Levels**
- **Package Options Include Plastic Thin Shrink Small-Outline (DGG) and 300-mil Shrink Small-Outline (DL) Packages**

DGG OR DL PACKAGE
(TOP VIEW)

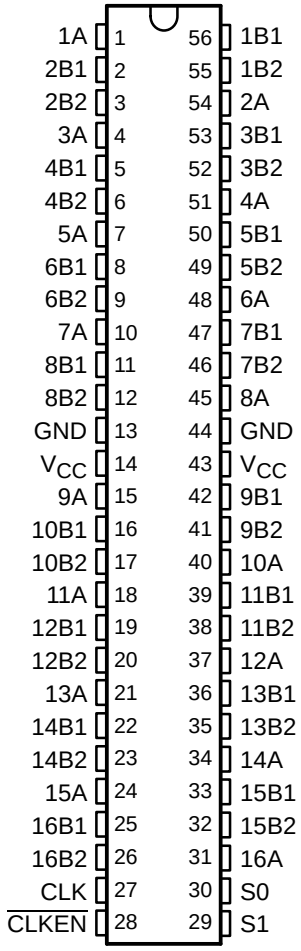

description

The SN74CBT16232 is a synchronous 16-bit 1-of-2 FET multiplexer/demultiplexer used in applications in which two separate datapaths must be multiplexed onto, or demultiplexed from, a single path.

Two select (S0 and S1) inputs control the data flow. A clock (CLK) and a clock enable ($\overline{\text{CLKEN}}$) synchronize the device operation. When $\overline{\text{CLKEN}}$ is high, the bus switch remains in the last clocked function.

The SN74CBT16232 is characterized for operation from –40°C to 85°C.

FUNCTION TABLE

INPUTS				FUNCTION
S1	S0	CLK	$\overline{\text{CLKEN}}$	
X	X	X	H	Last state
L	L	↑	L	Disconnect
L	H	↑	L	A = B1 and A = B2
H	L	↑	L	A = B1
H	H	↑	L	A = B2

PRODUCTION DATA information is current as of publication date. Products conform to specifications per the terms of Texas Instruments standard warranty. Production processing does not necessarily include testing of all parameters.

Copyright © 1998, Texas Instruments Incorporated

logic diagram (positive logic)

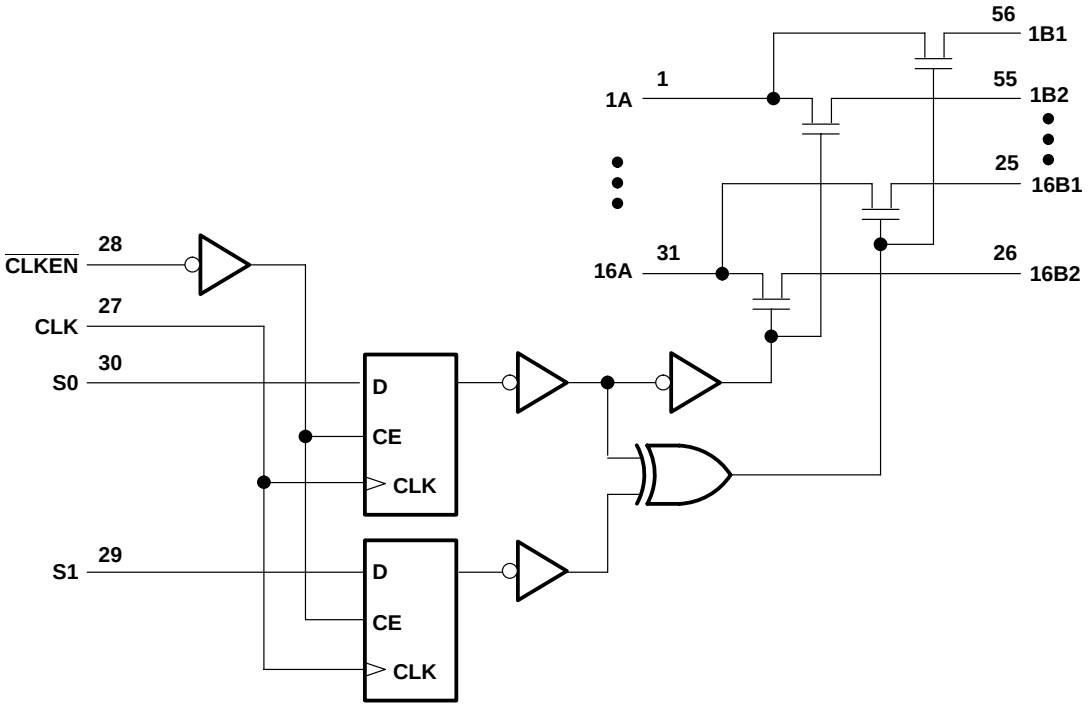

absolute maximum ratings over operating free-air temperature range (unless otherwise noted)†

Supply voltage range, V_{CC}	–0.5 V to 7 V
Input voltage range, V_I (see Note 1)	–0.5 V to 7 V
Continuous channel current	128 mA
Input clamp current, I_{IK} ($V_I < 0$)	–50 mA
Package thermal impedance, θ_{JA} (see Note 2): DGG package	81°C/W
DL package	74°C/W
Storage temperature range, T_{stg}	–65°C to 150°C

† Stresses beyond those listed under “absolute maximum ratings” may cause permanent damage to the device. These are stress ratings only, and functional operation of the device at these or any other conditions beyond those indicated under “recommended operating conditions” is not implied. Exposure to absolute-maximum-rated conditions for extended periods may affect device reliability.

NOTES: 1. The input and output negative-voltage ratings may be exceeded if the input and output clamp-current ratings are observed.
2. The package thermal impedance is calculated in accordance with JESD 51.

recommended operating conditions (see Note 3)

		MIN	MAX	UNIT
V_{CC}	Supply voltage	4	5.5	V
V_{IH}	High-level control input voltage	2		V
V_{IL}	Low-level control input voltage		0.8	V
T_A	Operating free-air temperature	–40	85	°C

NOTE 3: All unused control inputs of the device must be held at V_{CC} or GND to ensure proper device operation. Refer to the TI application report, *Implications of Slow or Floating CMOS Inputs*, literature number SCBA004.

electrical characteristics over recommended operating free-air temperature range (unless otherwise noted)

PARAMETER		TEST CONDITIONS				MIN	TYP†	MAX	UNIT
V_{IK}		V_{CC} = 4.5 V,	I_I = –18 mA					–1.2	V
I_I		V_{CC} = 5.5 V,	V_I = 5.5 V or GND					±1	µA
I_{CC}		V_{CC} = 5.5 V,	I_O = 0,	V_I = V_{CC} or GND				3	µA
ΔI_{CC}‡	Control inputs	V_{CC} = 5.5 V,	One input at 3.4 V,	Other inputs at V_{CC} or GND				2.5	mA
C_i	Control inputs	V_I = 3 V or 0					4.5		pF
$C_{io(OFF)}$	A port	V_O = 3 V or 0,	$\overline{CLKEN}$ = 0,	S0 = 0,	S1 = 0		6.5		pF
	B port						4		
r_{on}§		V_{CC} = 4 V, TYP at V_{CC} = 4 V	V_I = 2.4 V,	I_I = 15 mA			14	20	Ω
		V_{CC} = 4.5 V	V_I = 0	I_I = 64 mA			5	7	
				I_I = 30 mA			5	7	
			V_I = 2.4 V,	I_I = 15 mA			10	15	

† All typical values are at V_{CC} = 5 V (unless otherwise noted), T_A = 25°C.
‡ This is the increase in supply current for each input that is at the specified TTL voltage level rather than V_{CC} or GND.
§ Measured by the voltage drop between the A and B terminals at the indicated current through the switch. On-state resistance is determined by the lower of the voltages of the two (A or B) terminals.

timing requirements over recommended ranges of supply voltage and operating free-air temperature (unless otherwise noted)

PARAMETER			V_{CC} = 4 V		V_{CC} = 5 V ± 0.5 V		UNIT
			MIN	MAX	MIN	MAX	
f_{clock}	Clock frequency			150		150	MHz
t_w	Pulse duration	CLK high or low	3.3		3.3		ns
t_{su}	Setup time	S0, S1 before CLK↑	2.2		1.9		ns
		$\overline{CLKEN}$ before CLK↑	2.4		1.9		
t_h	Hold time	S0, S1 after CLK↑	0.5		1		ns
		$\overline{CLKEN}$ after CLK↑	1.9		1.8		

switching characteristics over recommended operating free-air temperature range, C_L = 50 pF (unless otherwise noted) (see Figure 1)

PARAMETER	FROM (INPUT)	TO (OUTPUT)	V_{CC} = 4 V		V_{CC} = 5 V ± 0.5 V		UNIT
			MIN	MAX	MIN	MAX	
f_{max}			150		150		MHz
t_{pd}¶	A or B	B or A		0.35		0.25	ns
t_{pd}	CLK	A or B		6.1	2	5.8	ns
t_{en}	CLK	A, B1, B2		6.8	1.8	6.2	ns
		B1 or B2		8.5	3.1	7.9	
t_{dis}	CLK	A or B		5.8	1.9	6.2	ns

¶ The propagation delay is the calculated RC time constant of the typical on-state resistance of the switch and the specified load capacitance, when driven by an ideal voltage source (zero output impedance).

PARAMETER MEASUREMENT INFORMATION

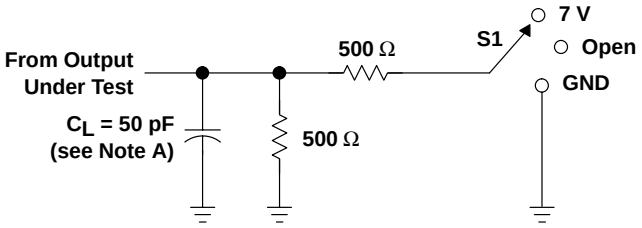

LOAD CIRCUIT

TEST	S1
t_{pd}	Open
t_{PLZ}/t_{PZL}	7 V
t_{PHZ}/t_{PZH}	Open

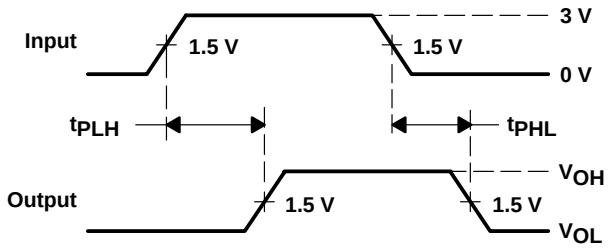

VOLTAGE WAVEFORMS
PROPAGATION DELAY TIMES

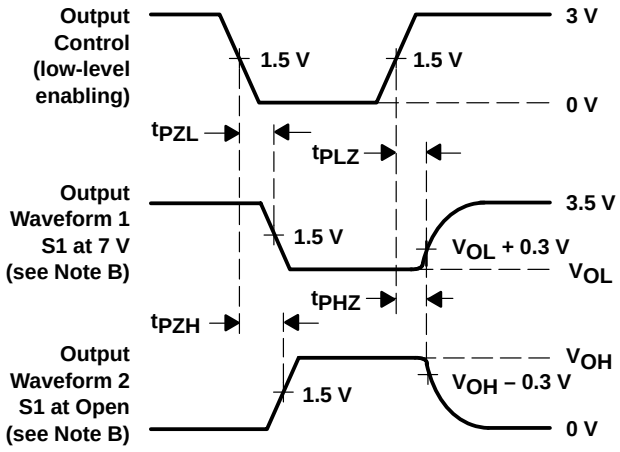

VOLTAGE WAVEFORMS
ENABLE AND DISABLE TIMES

NOTES:
A. C_L includes probe and jig capacitance.
B. Waveform 1 is for an output with internal conditions such that the output is low except when disabled by the output control. Waveform 2 is for an output with internal conditions such that the output is high except when disabled by the output control.
C. All input pulses are supplied by generators having the following characteristics: PRR ≤ 10 MHz, Z_O = 50 Ω, t_r ≤ 2.5 ns, t_f ≤ 2.5 ns.
D. The outputs are measured one at a time with one transition per measurement.
E. t_{PLZ} and t_{PHZ} are the same as t_{dis}.
F. t_{PZL} and t_{PZH} are the same as t_{en}.
G. t_{PLH} and t_{PHL} are the same as t_{pd}.

Figure 1. Load Circuit and Voltage Waveforms

- **5-Ω Switch Connection Between Two Ports**
- **TTL-Compatible Input Levels**
- **Package Options Include Plastic Thin Shrink Small-Outline (DGG), Thin Very Small-Outline (DGV), and 300-mil Shrink Small-Outline (DL) Packages**

DGG, DGV, OR DL PACKAGE
(TOP VIEW)

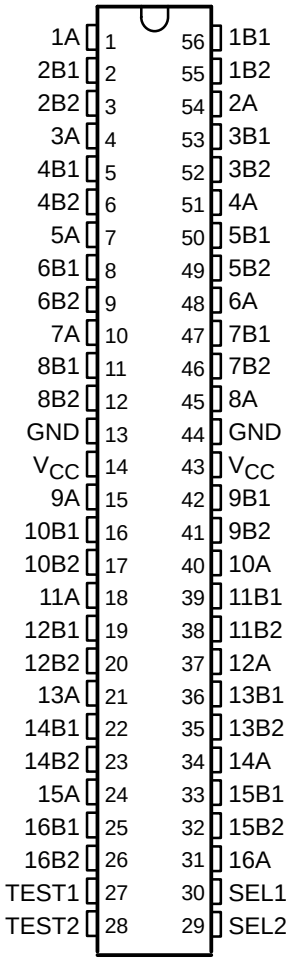

description

The SN74CBT16233 is a 16-bit 1-of-2 FET multiplexer/demultiplexer used in applications in which two separate data paths must be multiplexed onto, or demultiplexed from, a single path. This device can be used for memory interleaving, where two different banks of memory need to be addressed simultaneously. The device can be used as two 8-bit to 16-bit multiplexers or as one 16-bit to 32-bit multiplexer.

Two select (SEL1 and SEL2) inputs control the data flow. When the TEST inputs are asserted, the A port is connected to both the B1 and the B2 ports. SEL1, SEL2, and the TEST inputs can be driven with a 5-V CMOS, a 5-V TTL, or a low-voltage TTL driver.

The device is specified by design not to have through current when switching directions.

The SN74CBT16233 is characterized for operation from 0°C to 70°C.

FUNCTION TABLE
(each multiplexer/demultiplexer)

INPUTS		FUNCTION
SEL	TEST	
L	L	A = B1
H	L	A = B2
X	H	A = B1 and A = B2

PRODUCTION DATA information is current as of publication date. Products conform to specifications per the terms of Texas Instruments standard warranty. Production processing does not necessarily include testing of all parameters.

Copyright © 1998, Texas Instruments Incorporated

logic diagram (positive logic)

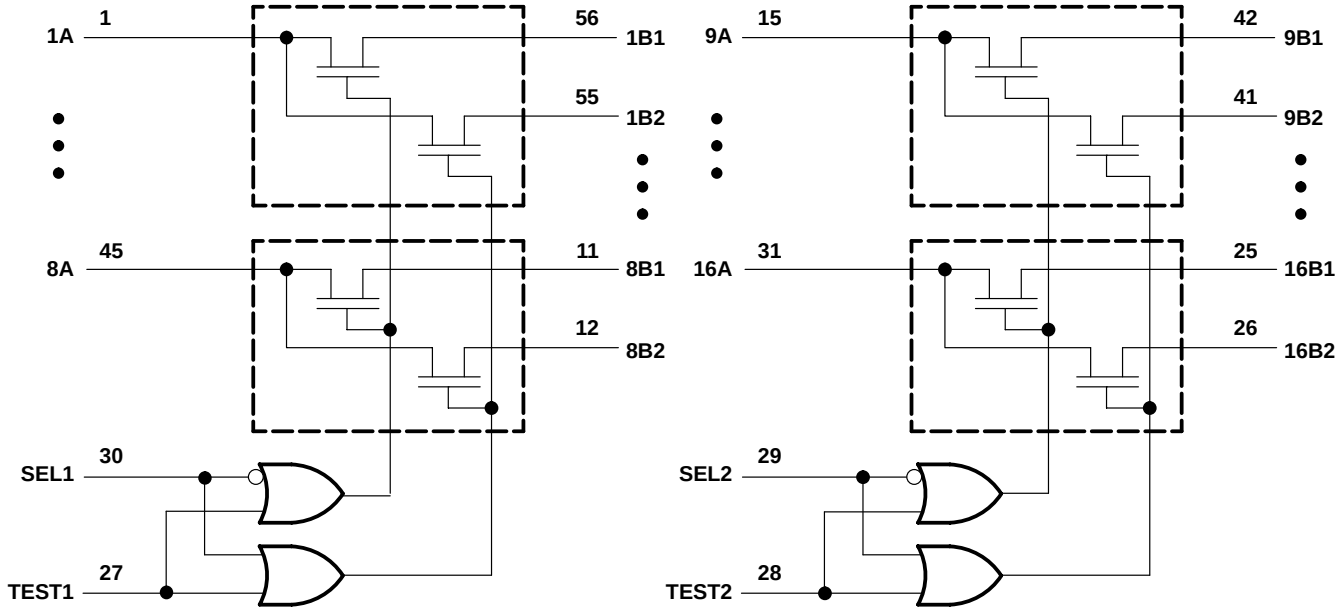

absolute maximum ratings over operating free-air temperature range (unless otherwise noted)†

Supply voltage range, V_{CC} . . . . . –0.5 V to 7 V
Input voltage range, V_I (see Note 1) . . . . . –0.5 V to V_{CC} + 0.5 V
Continuous channel current . . . . . 128 mA
Input clamp current, I_{IK} (V_I < 0) . . . . . –50 mA
Package thermal impedance, θ_{JA} (see Note 2): DGG package . . . . . 81°C/W
DGV package . . . . . 86°C/W
DL package . . . . . 74°C/W
Storage temperature range, T_{stg} . . . . . –65°C to 150°C

† Stresses beyond those listed under "absolute maximum ratings" may cause permanent damage to the device. These are stress ratings only, and functional operation of the device at these or any other conditions beyond those indicated under "recommended operating conditions" is not implied. Exposure to absolute-maximum-rated conditions for extended periods may affect device reliability.

NOTES: 1. The input and output negative-voltage ratings may be exceeded if the input and output clamp-current ratings are observed.
2. The package thermal impedance is calculated in accordance with JESD 51.

recommended operating conditions (see Note 3)

		MIN	MAX	UNIT
V_{CC}	Supply voltage	4.75	5.25	V
V_{IH}	High-level control input voltage	2		V
V_{IL}	Low-level control input voltage		0.8	V
T_A	Operating free-air temperature	0	70	°C

NOTE 3: All unused control inputs of the device must be held at V_{CC} or GND to ensure proper device operation. Refer to the TI application report, *Implications of Slow or Floating CMOS Inputs*, literature number SCBA004.

electrical characteristics over recommended operating free-air temperature range (unless otherwise noted)

PARAMETER		TEST CONDITIONS			MIN	TYP†	MAX	UNIT
V_{IK}		V_{CC} = 4.75 V,	I_I = –18 mA				–1.2	V
I_I		V_{CC} = 0,	V_I = 5.25 V				10	µA
		V_{CC} = 5.25 V,	V_I = 5.25 V or GND				±1	µA
I_{CC}		V_{CC} = 5.25 V,	I_O = 0,	V_I = V_{CC} or GND			3	µA
ΔI_{CC}‡	Control inputs	V_{CC} = 5.5 V,	One input at 3.4 V,	Other inputs at V_{CC} or GND			2.5	mA
C_i	Control inputs	V_I = 3 V or 0				4.5		pF
$C_{io(OFF)}$		V_O = 3 V or 0				4		pF
r_{on}§		V_{CC} = 4.75 V	V_I = 0	I_I = 64 mA		5	7	Ω
				I_I = 30 mA		5	7	
			V_I = 2.4 V,	I_I = 15 mA		7	12	

† All typical values are at V_{CC} = 5 V, T_A = 25°C.
‡ This is the increase in supply current for each input that is at the specified TTL voltage level rather than V_{CC} or GND.
§ Measured by the voltage drop between A and B terminals at the indicated current through the switch. On-state resistance is determined by the lower of the voltages of the two (A or B) terminals.

switching characteristics over recommended operating free-air temperature range, C_L = 50 pF (unless otherwise noted) (see Figure 1)

PARAMETER	FROM (INPUT)	TO (OUTPUT)	MIN	MAX	UNIT
t_{pd}¶	A or B	B or A		0.25	ns
t_{pd}	SEL	A	1.6	5.3	ns
t_{en}	TEST or SEL	B	1.3	5.2	ns
t_{dis}	TEST or SEL	B	1	5.3	ns

¶ The propagation delay is the calculated RC time constant of the typical on-state resistance of the switch and the specified load capacitance, when driven by an ideal voltage source (zero output impedance).

PARAMETER MEASUREMENT INFORMATION

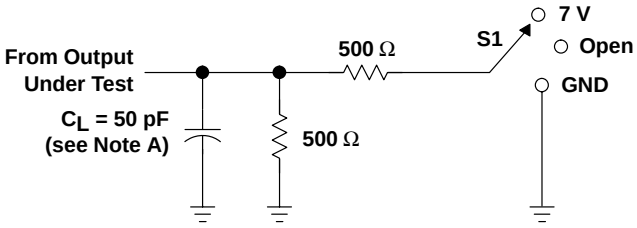

LOAD CIRCUIT

TEST	S1
t_{pd}	Open
t_{PLZ}/t_{PZL}	7 V
t_{PHZ}/t_{PZH}	Open

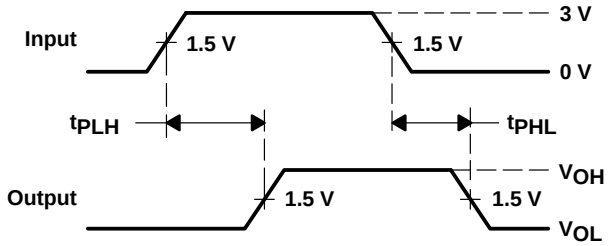

VOLTAGE WAVEFORMS
PROPAGATION DELAY TIMES

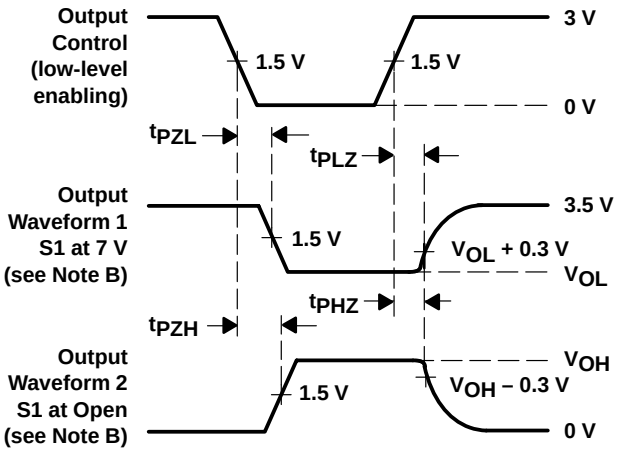

VOLTAGE WAVEFORMS
ENABLE AND DISABLE TIMES

NOTES: A. C_L includes probe and jig capacitance.
B. Waveform 1 is for an output with internal conditions such that the output is low except when disabled by the output control. Waveform 2 is for an output with internal conditions such that the output is high except when disabled by the output control.
C. All input pulses are supplied by generators having the following characteristics: PRR ≤ 10 MHz, Z_O = 50 Ω, t_r ≤ 2.5 ns, t_f ≤ 2.5 ns.
D. The outputs are measured one at a time with one transition per measurement.
E. t_{PLZ} and t_{PHZ} are the same as t_{dis}.
F. t_{PZL} and t_{PZH} are the same as t_{en}.
G. t_{PLH} and t_{PHL} are the same as t_{pd}.

Figure 1. Load Circuit and Voltage Waveforms

- **25-Ω Switch Connection Between Two Ports**
- **TTL-Compatible Input Levels**
- **Package Options Include Plastic Thin Shrink Small-Outline (DGG), Thin Very Small-Outline (DGV), and 300-mil Shrink Small-Outline (DL) Packages**

DGG, DGV, OR DL PACKAGE
(TOP VIEW)

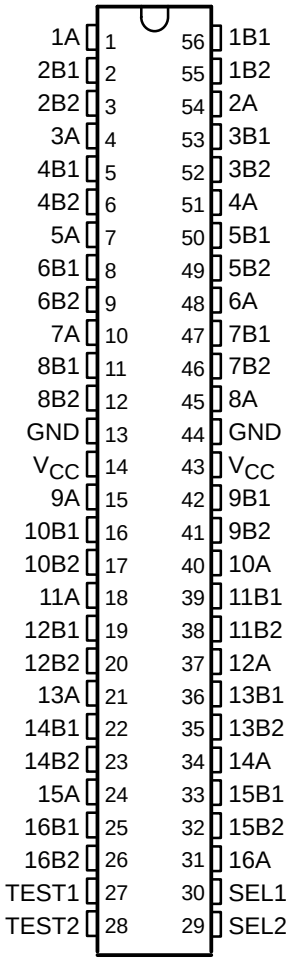

description

The SN74CBTR16233 is a 16-bit 1-of-2 FET multiplexer/demultiplexer used in applications in which two separate data paths must be multiplexed onto, or demultiplexed from, a single path. This device can be used for memory interleaving, where two different banks of memory need to be addressed simultaneously. The device can be used as two 8-bit to 16-bit multiplexers or as one 16-bit to 32-bit multiplexer.

Two select (SEL1 and SEL2) inputs control the data flow. When the TEST inputs are asserted, the A port is connected to both the B1 and the B2 ports. SEL1, SEL2, and the TEST inputs can be driven with a 5-V CMOS, a 5-V TTL, or a low-voltage TTL driver.

The SN74CBTR16233 is specified by design not to have through current when switching directions.

The device has equivalent 25-Ω series resistors to reduce signal-reflection noise. This eliminates the need for external terminating resistors.

The SN74CBTR16233 is characterized for operation from 0°C to 70°C.

FUNCTION TABLE
(each multiplexer/demultiplexer)

INPUTS		FUNCTION
SEL	TEST	
L	L	A = B1
H	L	A = B2
X	H	A = B1 and A = B2

PRODUCT PREVIEW

PRODUCT PREVIEW information concerns products in the formative or design phase of development. Characteristic data and other specifications are design goals. Texas Instruments reserves the right to change or discontinue these products without notice.

Copyright © 1998, Texas Instruments Incorporated

PRODUCT PREVIEW

logic diagram (positive logic)

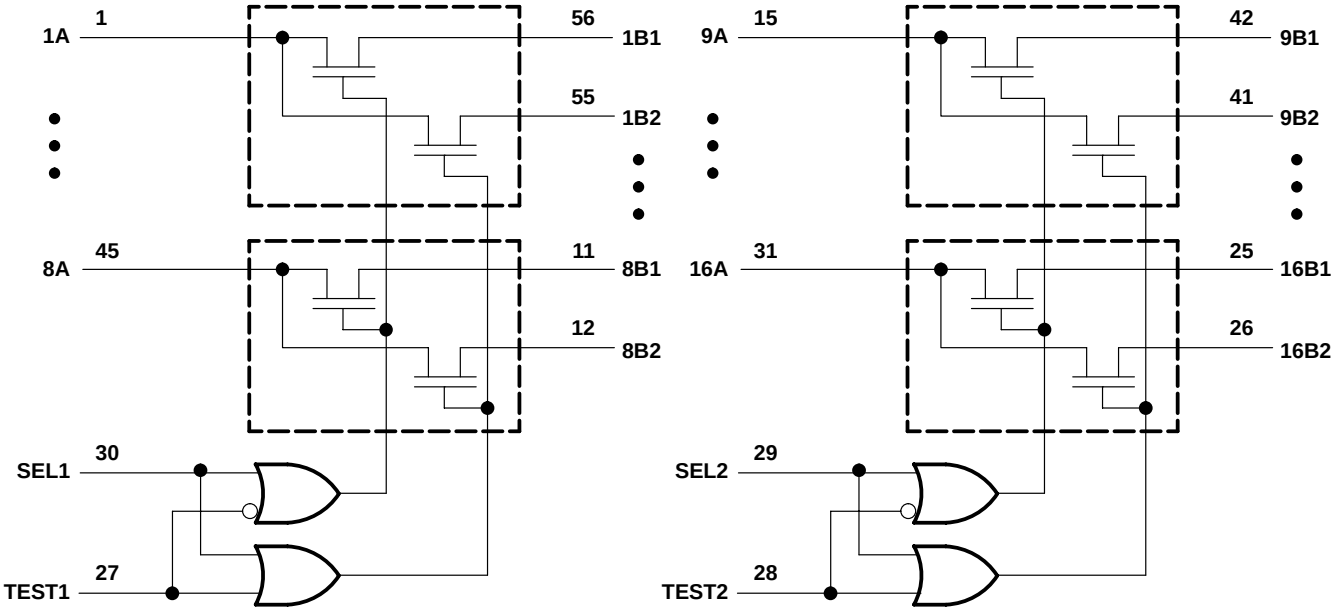

absolute maximum ratings over operating free-air temperature range (unless otherwise noted)†

Supply voltage range, V_{CC}	–0.5 V to 7 V
Input voltage range, V_I (see Note 1)	–0.5 V to V_{CC} + 0.5 V
Continuous channel current	128 mA
Input clamp current, I_{IK} (V_I < 0)	–50 mA
Package thermal impedance, θ_{JA} (see Note 2): DGG package	81°C/W
DGV package	86°C/W
DL package	74°C/W
Storage temperature range, T_{stg}	–65°C to 150°C

† Stresses beyond those listed under “absolute maximum ratings” may cause permanent damage to the device. These are stress ratings only, and functional operation of the device at these or any other conditions beyond those indicated under “recommended operating conditions” is not implied. Exposure to absolute-maximum-rated conditions for extended periods may affect device reliability.

NOTES: 1. The input and output negative-voltage ratings may be exceeded if the input and output clamp-current ratings are observed.
2. The package thermal impedance is calculated in accordance with JESD 51.

recommended operating conditions (see Note 3)

		MIN	MAX	UNIT
V_{CC}	Supply voltage	4.75	5.25	V
V_{IH}	High-level control input voltage	2		V
V_{IL}	Low-level control input voltage		0.8	V
T_A	Operating free-air temperature	0	70	°C

NOTE 3: All unused control inputs of the device must be held at V_{CC} or GND to ensure proper device operation. Refer to the TI application report, *Implications of Slow or Floating CMOS Inputs*, literature number SCBA004.

electrical characteristics over recommended operating free-air temperature range (unless otherwise noted)

PARAMETER		TEST CONDITIONS			MIN	TYP†	MAX	UNIT
V_{IK}		V_{CC} = 4.75 V,	I_I = –18 mA				–1.2	V
I_I		V_{CC} = 0,	V_I = 5.25 V				10	µA
		V_{CC} = 5.25 V,	V_I = 5.25 V or GND				±1	µA
I_{CC}		V_{CC} = 5.25 V,	I_O = 0,	V_I = V_{CC} or GND			3	µA
ΔI_{CC}‡	Control inputs	V_{CC} = 5.5 V,	One input at 3.4 V,	Other inputs at V_{CC} or GND			2.5	mA
C_i	Control inputs	V_I = 3 V or 0						pF
$C_{io(OFF)}$		V_O = 3 V or 0						pF
r_{on}§		V_{CC} = 4.75 V	V_I = 0	I_I = 64 mA				Ω
				I_I = 30 mA				
			V_I = 2.4 V,	I_I = 15 mA				

† All typical values are at V_{CC} = 5 V, T_A = 25°C.
‡ This is the increase in supply current for each input that is at the specified TTL voltage level rather than V_{CC} or GND.
§ Measured by the voltage drop between A and B terminals at the indicated current through the switch. On-state resistance is determined by the lower of the voltages of the two (A or B) terminals.

switching characteristics over recommended operating free-air temperature range, C_L = 50 pF (unless otherwise noted) (see Figure 1)

PARAMETER	FROM (INPUT)	TO (OUTPUT)	MIN	MAX	UNIT
t_{pd}¶	A or B	B or A			ns
t_{pd}	SEL	A			ns
t_{en}	TEST or SEL	B			ns
t_{dis}	TEST or SEL	B			ns

¶ The propagation delay is the calculated RC time constant of the typical on-state resistance of the switch and the specified load capacitance, when driven by an ideal voltage source (zero output impedance).

PRODUCT PREVIEW

PARAMETER MEASUREMENT INFORMATION

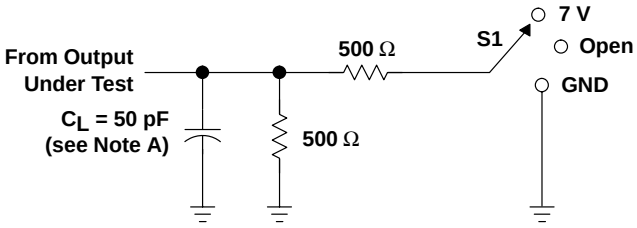

LOAD CIRCUIT

TEST	S1
t_{pd}	Open
t_{PLZ}/t_{PZL}	7 V
t_{PHZ}/t_{PZH}	Open

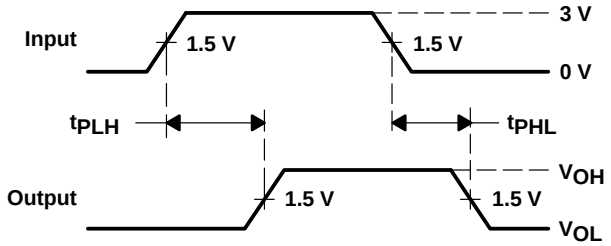

VOLTAGE WAVEFORMS
PROPAGATION DELAY TIMES

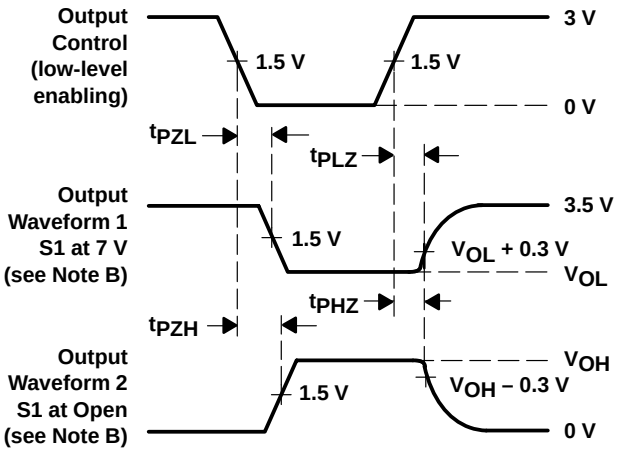

VOLTAGE WAVEFORMS
ENABLE AND DISABLE TIMES

NOTES: A. C_L includes probe and jig capacitance.
B. Waveform 1 is for an output with internal conditions such that the output is low except when disabled by the output control. Waveform 2 is for an output with internal conditions such that the output is high except when disabled by the output control.
C. All input pulses are supplied by generators having the following characteristics: PRR ≤ 10 MHz, Z_O = 50 Ω, t_r ≤ 2.5 ns, t_f ≤ 2.5 ns.
D. The outputs are measured one at a time with one transition per measurement.
E. t_{PLZ} and t_{PHZ} are the same as t_{dis}.
F. t_{PZL} and t_{PZH} are the same as t_{en}.
G. t_{PLH} and t_{PHL} are the same as t_{pd}.

Figure 1. Load Circuit and Voltage Waveforms

PRODUCT PREVIEW

- **Standard ’16244-Type Pinout**
- **5-Ω Switch Connection Between Two Ports**
- **TTL-Compatible Input Levels**
- **Package Options Include Plastic Thin Shrink Small-Outline (DGG), Thin Very Small-Outline (DGV), and Shrink Small-Outline (DL) Packages, and Ceramic Flat (WD) Package**

SN54CBT16244 . . . WD PACKAGE
SN74CBT16244 . . . DGG, DGV, OR DL PACKAGE
(TOP VIEW)

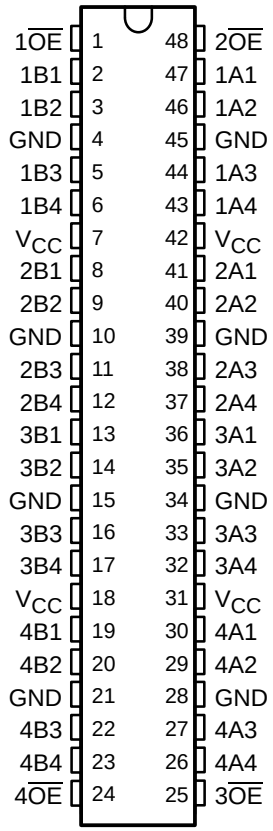

description

The ’CBT16244 devices provide 16 bits of high-speed TTL-compatible bus switching in a standard ’16244 device pinout. The low on-state resistance of the switch allows connections to be made with minimal propagation delay.

These devices are organized as four 4-bit low-impedance switches with separate output-enable ($\overline{OE}$) inputs. When $\overline{OE}$ is low, the switch is on and data can flow from port A to port B, or vice versa. When $\overline{OE}$ is high, the switch is open and a high-impedance state exists between the two ports.

The SN54CBT16244 is characterized for operation over the full military temperature range of –55°C to 125°C. The SN74CBT16244 is characterized for operation from –40°C to 85°C.

FUNCTION TABLE
(each 4-bit bus switch)

INPUT $\overline{OE}$	OUTPUTS A, B
L	A port = B port
H	Z

PRODUCTION DATA information is current as of publication date. Products conform to specifications per the terms of Texas Instruments standard warranty. Production processing does not necessarily include testing of all parameters.

Copyright © 1998, Texas Instruments Incorporated
On products compliant to MIL-PRF-38535, all parameters are tested unless otherwise noted. On all other products, production processing does not necessarily include testing of all parameters.

logic diagram (positive logic)

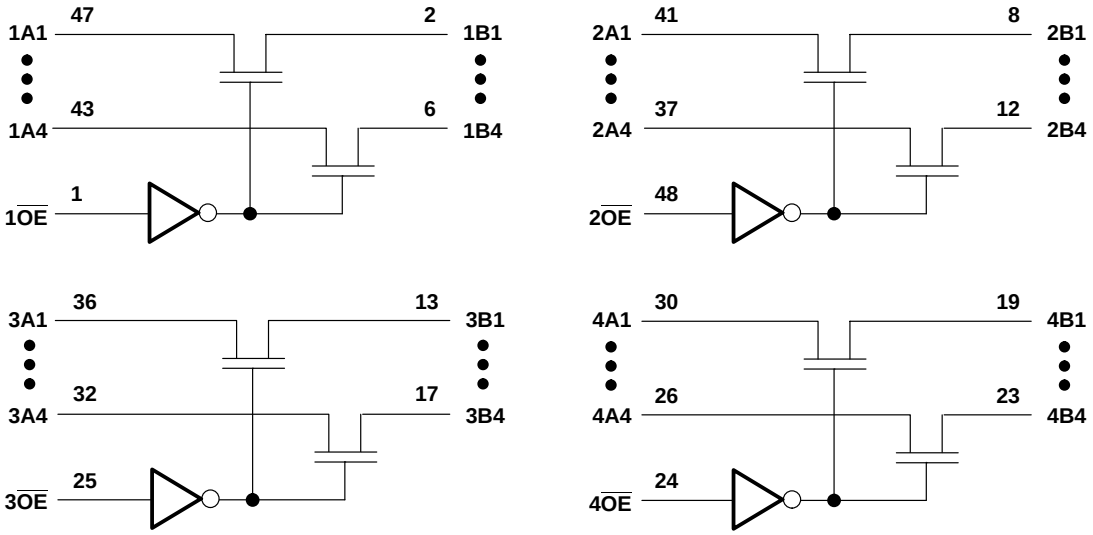

Pin numbers shown are for the DGG, DGV, and DL packages.

absolute maximum ratings over operating free-air temperature range (unless otherwise noted)†

Supply voltage range, V_{CC}		–0.5 V to 7 V
Input voltage range, V_I (see Note 1)		–0.5 V to 7 V
Continuous channel current		128 mA
Input clamp current, I_{IK} ($V_{I/O} < 0$)		–50 mA
Package thermal impedance, θ_{JA} (see Note 2):	DGG package	89°C/W
	DGV package	93°C/W
	DL package	94°C/W
Storage temperature range, T_{stg}		–65°C to 150°C

† Stresses beyond those listed under “absolute maximum ratings” may cause permanent damage to the device. These are stress ratings only, and functional operation of the device at these or any other conditions beyond those indicated under “recommended operating conditions” is not implied. Exposure to absolute-maximum-rated conditions for extended periods may affect device reliability.

NOTES: 1. The input and output negative-voltage ratings may be exceeded if the input and output clamp-current ratings are observed.
2. The package thermal impedance is calculated in accordance with JESD 51.

recommended operating conditions (see Note 3)

		SN54CBT16244		SN74CBT16244		UNIT
		MIN	MAX	MIN	MAX	
V_{CC}	Supply voltage	4	5.5	4	5.5	V
V_{IH}	High-level control input voltage	2		2		V
V_{IL}	Low-level control input voltage		0.8		0.8	V
T_A	Operating free-air temperature	–55	125	–40	85	°C

NOTE 3: All unused control inputs of the device must be held at V_{CC} or GND to ensure proper device operation. Refer to the TI application report, *Implications of Slow or Floating CMOS Inputs*, literature number SCBA004.

electrical characteristics over recommended operating free-air temperature range (unless otherwise noted)

PARAMETER		TEST CONDITIONS			SN54CBT16244 MIN	SN54CBT16244 TYP†	SN54CBT16244 MAX	SN74CBT16244 MIN	SN74CBT16244 TYP†	SN74CBT16244 MAX	UNIT
V_{IK}		V_{CC} = 4.5 V,	I_I = –18 mA				–1.2			–1.2	V
I_I		V_{CC} = 0	V_I = 5.5 V				10			10	µA
		V_{CC} = 5.5 V	V_I = 5.5 V or GND				±1			±1	
I_{CC}		V_{CC} = 5.5 V, V_I = V_{CC} or GND	I_O = 0,				3.2			3	µA
ΔI_{CC}‡	Control inputs	V_{CC} = 5.5 V, Other inputs at V_{CC} or GND	One input at 3.4 V,				2.5			2.5	mA
C_i	Control inputs	V_I = 3 V or 0				2.5			2.5		pF
$C_{io(OFF)}$		V_O = 3 V or 0,	$\overline{OE}$ = V_{CC}			4.5			4.5		pF
r_{on}§		V_{CC} = 4 V,	V_I = 2.4 V,	I_I = 15 mA			20			20	Ω
		V_{CC} = 4.5 V	V_I = 0	I_I = 64 mA		5	10		5	7	
				I_I = 30 mA		5	10		5	7	
			V_I = 2.4 V,	I_I = 15 mA		8	14		8	12	

† All typical values are at V_{CC} = 5 V, T_A = 25°C.
‡ This is the increase in supply current for each input that is at the specified TTL voltage level rather than V_{CC} or GND.
§ Measured by the voltage drop between the A and B terminals at the indicated current through the switch. On-state resistance is determined by the lower of the voltages of the two (A or B) terminals.

switching characteristics over recommended operating free-air temperature range, C_L = 50 pF (unless otherwise noted) (see Figure 1)

PARAMETER	FROM (INPUT)	TO (OUTPUT)	SN54CBT16244 V_{CC} = 4 V MIN	SN54CBT16244 V_{CC} = 4 V MAX	SN54CBT16244 V_{CC} = 5 V ± 0.5 V MIN	SN54CBT16244 V_{CC} = 5 V ± 0.5 V MAX	SN74CBT16244 V_{CC} = 4 V MIN	SN74CBT16244 V_{CC} = 4 V MAX	SN74CBT16244 V_{CC} = 5 V ± 0.5 V MIN	SN74CBT16244 V_{CC} = 5 V ± 0.5 V MAX	UNIT
t_{pd}¶	A or B	B or A				0.8*		0.35		0.25	ns
t_{en}	$\overline{OE}$	A or B		10.3	1	9.2		5.5	1	5.1	ns
t_{dis}	$\overline{OE}$	A or B		9.7	1	8.2		5.2	1	5.4	ns

* On products compliant to MIL-PRF-38535, this parameter is not production tested.
¶ The propagation delay is the calculated RC time constant of the typical on-state resistance of the switch and the specified load capacitance, when driven by an ideal voltage source (zero output impedance).

PARAMETER MEASUREMENT INFORMATION

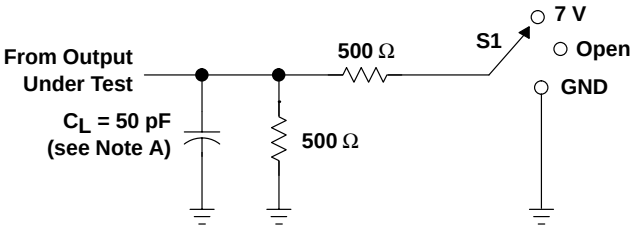

LOAD CIRCUIT

TEST	S1
t_{pd}	Open
t_{PLZ}/t_{PZL}	7 V
t_{PHZ}/t_{PZH}	Open

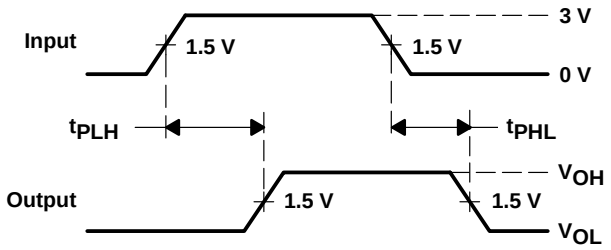

VOLTAGE WAVEFORMS
PROPAGATION DELAY TIMES

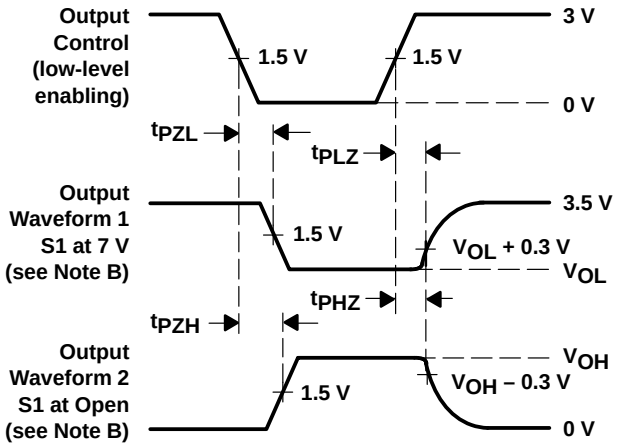

VOLTAGE WAVEFORMS
ENABLE AND DISABLE TIMES

NOTES:
A. C_L includes probe and jig capacitance.
B. Waveform 1 is for an output with internal conditions such that the output is low except when disabled by the output control. Waveform 2 is for an output with internal conditions such that the output is high except when disabled by the output control.
C. All input pulses are supplied by generators having the following characteristics: PRR ≤ 10 MHz, Z_O = 50 Ω, t_r ≤ 2.5 ns, t_f ≤ 2.5 ns.
D. The outputs are measured one at a time with one transition per measurement.
E. t_{PLZ} and t_{PHZ} are the same as t_{dis}.
F. t_{PZL} and t_{PZH} are the same as t_{en}.
G. t_{PLH} and t_{PHL} are the same as t_{pd}.

Figure 1. Load Circuit and Voltage Waveforms

- **Standard ’16244-Type Pinout**
- **25-Ω Switch Connection Between Two Ports**
- **TTL-Compatible Input Levels**
- **Package Options Include Plastic Thin Shrink Small-Outline (DGG), Thin Very Small-Outline (DGV), and 300-mil Shrink Small-Outline (DL) Packages**

DGG, DGV, OR DL PACKAGE
(TOP VIEW)

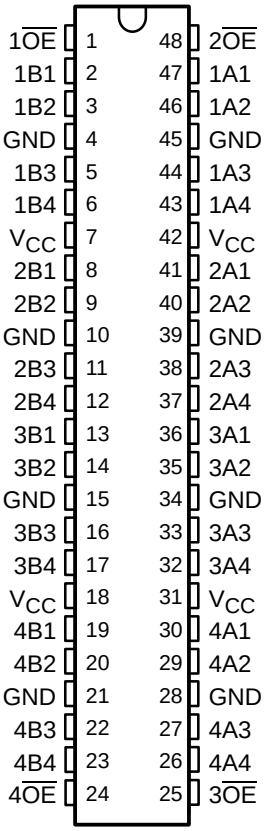

description

The SN74CBTR16244 provides 16 bits of high-speed TTL-compatible bus switching in a standard ’16244 device pinout. The low on-state resistance of the switch allows connections to be made with minimal propagation delay.

The device is organized as four 4-bit low-impedance switches with separate output-enable ($\overline{OE}$) inputs. When $\overline{OE}$ is low, the switch is on and data can flow from port A to port B, or vice versa. When $\overline{OE}$ is high, the switch is open and a high-impedance state exists between the two ports.

The device has equivalent 25-Ω series resistors to reduce signal-reflection noise. This eliminates the need for external terminating resistors.

The SN74CBTR16244 is characterized for operation from –40°C to 85°C.

FUNCTION TABLE
(each 4-bit bus switch)

INPUT $\overline{OE}$	OUTPUTS A, B
L	A port = B port
H	Z

PRODUCT PREVIEW

PRODUCT PREVIEW information concerns products in the formative or design phase of development. Characteristic data and other specifications are design goals. Texas Instruments reserves the right to change or discontinue these products without notice.

Copyright © 1998, Texas Instruments Incorporated

logic diagram (positive logic)

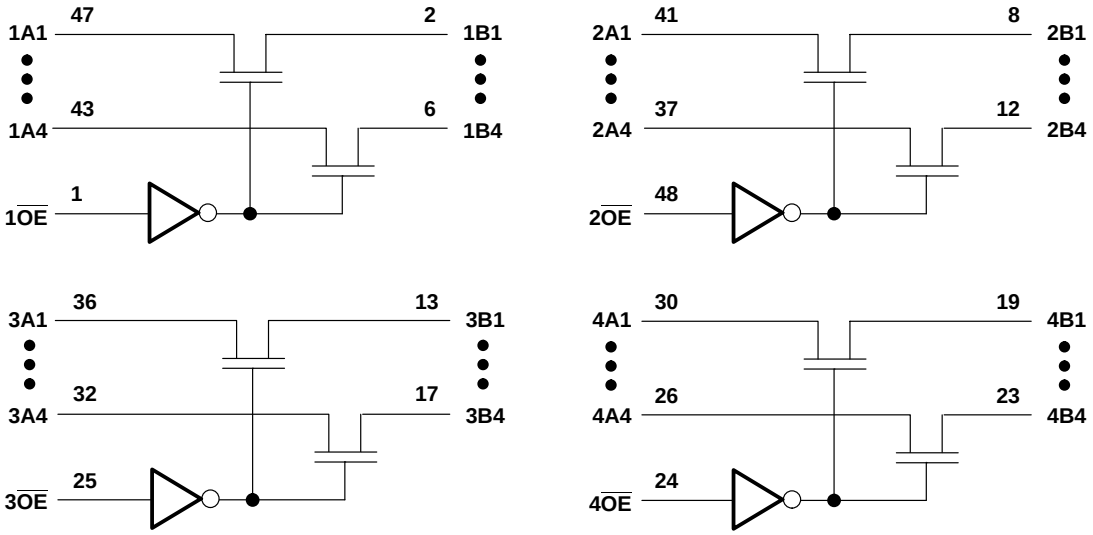

absolute maximum ratings over operating free-air temperature range (unless otherwise noted)†

Supply voltage range, V_{CC}	–0.5 V to 7 V
Input voltage range, V_I (see Note 1)	–0.5 V to 7 V
Continuous channel current	128 mA
Input clamp current, I_{IK} ($V_{I/O} < 0$)	–50 mA
Package thermal impedance, θ_{JA} (see Note 2): DGG package	89°C/W
DGV package	93°C/W
DL package	94°C/W
Storage temperature range, T_{stg}	–65°C to 150°C

† Stresses beyond those listed under “absolute maximum ratings” may cause permanent damage to the device. These are stress ratings only, and functional operation of the device at these or any other conditions beyond those indicated under “recommended operating conditions” is not implied. Exposure to absolute-maximum-rated conditions for extended periods may affect device reliability.

NOTES: 1. The input and output negative-voltage ratings may be exceeded if the input and output clamp-current ratings are observed.
2. The package thermal impedance is calculated in accordance with JESD 51.

recommended operating conditions (see Note 3)

		MIN	MAX	UNIT
V_{CC}	Supply voltage	4.5	5.5	V
V_{IH}	High-level control input voltage	2		V
V_{IL}	Low-level control input voltage		0.8	V
T_A	Operating free-air temperature	–40	85	°C

NOTE 3: All unused control inputs of the device must be held at V_{CC} or GND to ensure proper device operation. Refer to the TI application report, *Implications of Slow or Floating CMOS Inputs*, literature number SCBA004.

PRODUCT PREVIEW

electrical characteristics over recommended operating free-air temperature range (unless otherwise noted)

PARAMETER		TEST CONDITIONS			MIN	TYP†	MAX	UNIT
V_{IK}		V_{CC} = 4.5 V,	I_I = –18 mA				–1.2	V
I_I		V_{CC} = 0	V_I = 5.5 V				10	µA
		V_{CC} = 5.5 V	V_I = 5.5 V or GND				±1	
I_{CC}		V_{CC} = 5.5 V,	I_O = 0,	V_I = V_{CC} or GND			3	µA
ΔI_{CC}‡	Control inputs	V_{CC} = 5.5 V,	One input at 3.4 V,	Other inputs at V_{CC} or GND			2.5	mA
C_i	Control inputs	V_I = 3 V or 0						pF
$C_{io(OFF)}$		V_O = 3 V or 0,	$\overline{OE}$ = V_{CC}					pF
r_{on}§		V_{CC} = 4.5 V	V_I = 0	I_I = 64 mA				Ω
				I_I = 30 mA				
			V_I = 2.4 V,	I_I = 15 mA				

† All typical values are at V_{CC} = 5 V, T_A = 25°C.
‡ This is the increase in supply current for each input that is at the specified TTL voltage level rather than V_{CC} or GND.
§ Measured by the voltage drop between the A and B terminals at the indicated current through the switch. On-state resistance is determined by the lower of the voltages of the two (A or B) terminals.

switching characteristics over recommended operating free-air temperature range, C_L = 50 pF (unless otherwise noted) (see Figure 1)

PARAMETER	FROM (INPUT)	TO (OUTPUT)	MIN	MAX	UNIT
t_{pd}¶	A or B	B or A			ns
t_{en}	$\overline{OE}$	A or B			ns
t_{dis}	$\overline{OE}$	A or B			ns

¶ The propagation delay is the calculated RC time constant of the typical on-state resistance of the switch and the specified load capacitance, when driven by an ideal voltage source (zero output impedance).

PRODUCT PREVIEW

PARAMETER MEASUREMENT INFORMATION

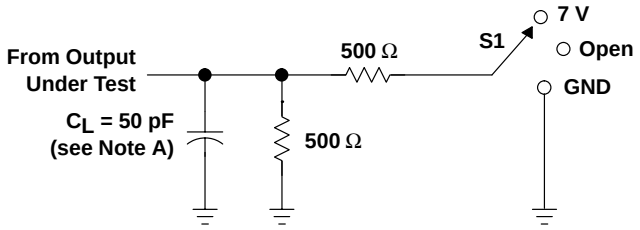

LOAD CIRCUIT

TEST	S1
t_{pd}	Open
t_{PLZ}/t_{PZL}	7 V
t_{PHZ}/t_{PZH}	Open

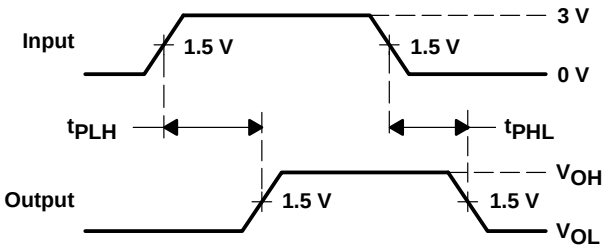

VOLTAGE WAVEFORMS
PROPAGATION DELAY TIMES

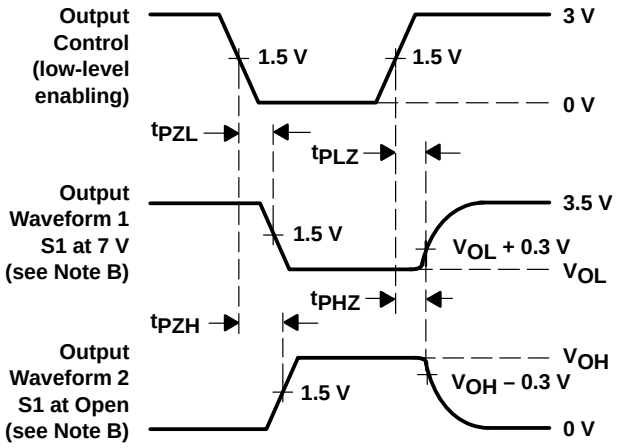

VOLTAGE WAVEFORMS
ENABLE AND DISABLE TIMES

NOTES: A. C_L includes probe and jig capacitance.
B. Waveform 1 is for an output with internal conditions such that the output is low except when disabled by the output control. Waveform 2 is for an output with internal conditions such that the output is high except when disabled by the output control.
C. All input pulses are supplied by generators having the following characteristics: PRR ≤ 10 MHz, Z_O = 50 Ω, t_r ≤ 2.5 ns, t_f ≤ 2.5 ns.
D. The outputs are measured one at a time with one transition per measurement.
E. t_{PLZ} and t_{PHZ} are the same as t_{dis}.
F. t_{PZL} and t_{PZH} are the same as t_{en}.
G. t_{PLH} and t_{PHL} are the same as t_{pd}.

Figure 1. Load Circuit and Voltage Waveforms

PRODUCT PREVIEW

- **Standard ’16245-Type Pinout**
- **5-Ω Switch Connection Between Two Ports**
- **TTL-Compatible Input Levels**
- **Package Options Include Plastic Thin Shrink Small-Outline (DGG), Thin Very Small-Outline (DGV), and Shrink Small-Outline (DL) Packages**

DGG, DGV, OR DL PACKAGE
(TOP VIEW)

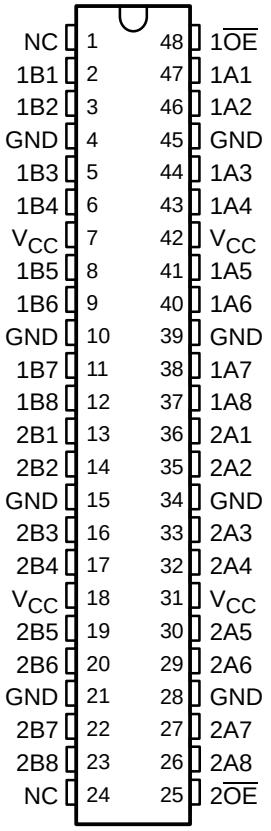

NC – No internal connection

description

The SN74CBT16245 provides 16 bits of high-speed TTL-compatible bus switching in a standard ’16245 device pinout. The low on-state resistance of the switch allows connections to be made with minimal propagation delay.

The device is organized as two 8-bit low-impedance switches with separate output-enable ($\overline{OE}$) inputs. When $\overline{OE}$ is low, the switch is on and data can flow from port A to port B, or vice versa. When $\overline{OE}$ is high, the switch is open and a high-impedance state exists between the two ports.

The SN74CBT16245 is characterized for operation from –40°C to 85°C.

FUNCTION TABLE
(each 8-bit bus switch)

INPUT $\overline{OE}$	FUNCTION
L	A port = B port
H	Disconnect

PRODUCT PREVIEW

PRODUCT PREVIEW information concerns products in the formative or design phase of development. Characteristic data and other specifications are design goals. Texas Instruments reserves the right to change or discontinue these products without notice.

Copyright © 1998, Texas Instruments Incorporated

logic diagram (positive logic)

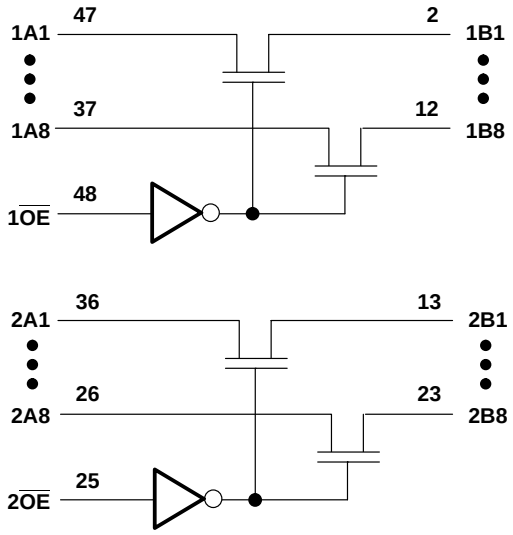

PRODUCT PREVIEW

absolute maximum ratings over operating free-air temperature range (unless otherwise noted)†

Supply voltage range, V_{CC} . . . . . –0.5 V to 7 V
Input voltage range, V_I (see Note 1) . . . . . –0.5 V to 7 V
Continuous channel current . . . . . 128 mA
Input clamp current, I_{IK} ($V_{I/O} < 0$) . . . . . –50 mA
Package thermal impedance, θ_{JA} (see Note 2): DGG package . . . . . 89°C/W
DGV package . . . . . 93°C/W
DL package . . . . . 94°C/W
Storage temperature range, T_{stg} . . . . . –65°C to 150°C

† Stresses beyond those listed under “absolute maximum ratings” may cause permanent damage to the device. These are stress ratings only, and functional operation of the device at these or any other conditions beyond those indicated under “recommended operating conditions” is not implied. Exposure to absolute-maximum-rated conditions for extended periods may affect device reliability.

NOTES: 1. The input and output negative-voltage ratings may be exceeded if the input and output clamp-current ratings are observed.
2. The package thermal impedance is calculated in accordance with JESD 51.

recommended operating conditions (see Note 3)

		MIN	MAX	UNIT
V_{CC}	Supply voltage	4	5.5	V
V_{IH}	High-level control input voltage	2		V
V_{IL}	Low-level control input voltage		0.8	V
T_A	Operating free-air temperature	–40	85	°C

NOTE 3: All unused control inputs of the device must be held at V_{CC} or GND to ensure proper device operation. Refer to the TI application report, *Implications of Slow or Floating CMOS Inputs*, literature number SCBA004.

electrical characteristics over recommended operating free-air temperature range (unless otherwise noted)

PARAMETER		TEST CONDITIONS			MIN	TYP†	MAX	UNIT
V_{IK}		V_{CC} = 4.5 V,	I_I = –18 mA				–1.2	V
I_I		V_{CC} = 0,	V_I = 5.5 V				10	µA
		V_{CC} = 5.5 V,	V_I = 5.5 V or GND				±1	
I_{CC}		V_{CC} = 5.5 V,	I_O = 0,	V_I = V_{CC} or GND			3	µA
ΔI_{CC}‡	Control inputs	V_{CC} = 5.5 V,	One input at 3.4 V,	Other inputs at V_{CC} or GND			2.5	mA
C_i	Control inputs	V_I = 3 V or 0						pF
$C_{io(OFF)}$		V_O = 3 V or 0,	$\overline{OE}$ = V_{CC}					pF
r_{on}§		V_{CC} = 4 V,	V_I = 2.4 V,	I_I = 15 mA				Ω
		V_{CC} = 4.5 V	V_I = 0	I_I = 64 mA				
				I_I = 30 mA				
			V_I = 2.4 V,	I_I = 15 mA				

† All typical values are at V_{CC} = 5 V, T_A = 25°C.
‡ This is the increase in supply current for each input that is at the specified TTL voltage level rather than V_{CC} or GND.
§ Measured by the voltage drop between the A and B terminals at the indicated current through the switch. On-state resistance is determined by the lower of the voltages of the two (A or B) terminals.

switching characteristics over recommended operating free-air temperature range, C_L = 50 pF (unless otherwise noted) (see Figure 1)

PARAMETER	FROM (INPUT)	TO (OUTPUT)	V_{CC} = 4 V		V_{CC} = 5 V ± 0.5 V		UNIT
			MIN	MAX	MIN	MAX	
t_{pd}¶	A or B	B or A					ns
t_{en}	$\overline{OE}$	A or B					ns
t_{dis}	$\overline{OE}$	A or B					ns

¶ The propagation delay is the calculated RC time constant of the typical on-state resistance of the switch and the specified load capacitance, when driven by an ideal voltage source (zero output impedance).

PRODUCT PREVIEW

PARAMETER MEASUREMENT INFORMATION

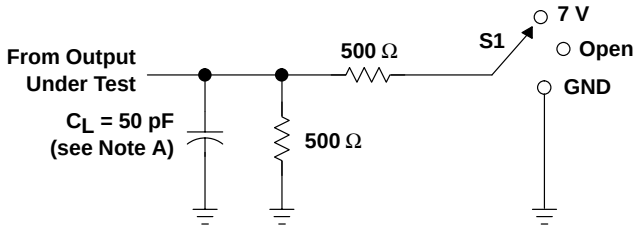

LOAD CIRCUIT

TEST	S1
t_{pd}	Open
t_{PLZ}/t_{PZL}	7 V
t_{PHZ}/t_{PZH}	Open

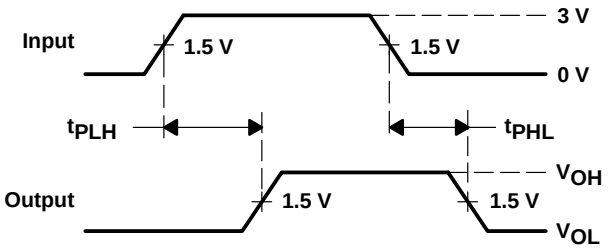

VOLTAGE WAVEFORMS
PROPAGATION DELAY TIMES

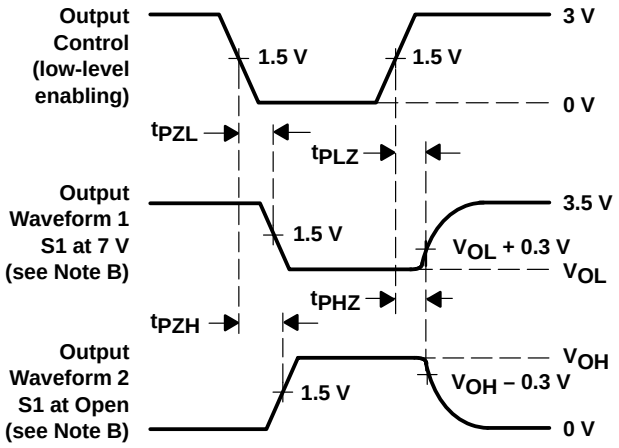

VOLTAGE WAVEFORMS
ENABLE AND DISABLE TIMES

NOTES: A. C_L includes probe and jig capacitance.
B. Waveform 1 is for an output with internal conditions such that the output is low except when disabled by the output control. Waveform 2 is for an output with internal conditions such that the output is high except when disabled by the output control.
C. All input pulses are supplied by generators having the following characteristics: PRR ≤ 10 MHz, Z_O = 50 Ω, t_r ≤ 2.5 ns, t_f ≤ 2.5 ns.
D. The outputs are measured one at a time with one transition per measurement.
E. t_{PLZ} and t_{PHZ} are the same as t_{dis}.
F. t_{PZL} and t_{PZH} are the same as t_{en}.
G. t_{PLH} and t_{PHL} are the same as t_{pd}.

Figure 1. Load Circuit and Voltage Waveforms

PRODUCT PREVIEW

- **Standard ’16245-Type Pinout**
- **25-Ω Switch Connection Between Two Ports**
- **TTL-Compatible Input Levels**
- **Package Options Include Plastic Thin Shrink Small-Outline (DGG), Thin Very Small-Outline (DGV), and Shrink Small-Outline (DL) Packages**

DGG, DGV, OR DL PACKAGE
(TOP VIEW)

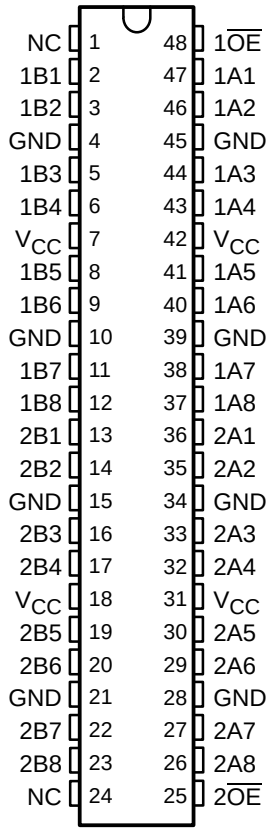

NC – No internal connection

description

The SN74CBTR16245 provides 16 bits of high-speed TTL-compatible bus switching in a standard ’16245 device pinout. The low on-state resistance of the switch allows connections to be made with minimal propagation delay.

The device is organized as two 8-bit low-impedance switches with separate output-enable ($\overline{OE}$) inputs. When $\overline{OE}$ is low, the switch is on and data can flow from port A to port B, or vice versa. When $\overline{OE}$ is high, the switch is open and a high-impedance state exists between the two ports.

The device has equivalent 25-Ω series resistors to reduce signal-reflection noise. This eliminates the need for external terminating resistors.

The SN74CBTR16245 is characterized for operation from –40°C to 85°C.

FUNCTION TABLE
(each 8-bit bus switch)

INPUT $\overline{OE}$	FUNCTION
L	A port = B port
H	Disconnect

PRODUCT PREVIEW

PRODUCT PREVIEW information concerns products in the formative or design phase of development. Characteristic data and other specifications are design goals. Texas Instruments reserves the right to change or discontinue these products without notice.

Copyright © 1998, Texas Instruments Incorporated

logic diagram (positive logic)

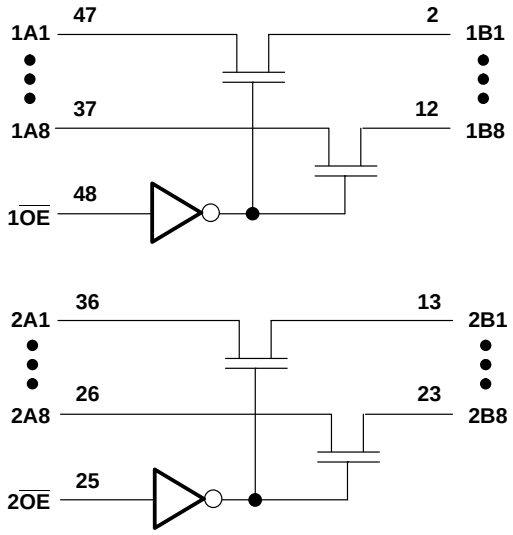

PRODUCT PREVIEW

absolute maximum ratings over operating free-air temperature range (unless otherwise noted)†

Supply voltage range, V_{CC}	–0.5 V to 7 V
Input voltage range, V_I (see Note 1)	–0.5 V to 7 V
Continuous channel current	128 mA
Input clamp current, I_{IK} ($V_{I/O} < 0$)	–50 mA
Package thermal impedance, θ_{JA} (see Note 2): DGG package	89°C/W
DGV package	93°C/W
DL package	94°C/W
Storage temperature range, T_{stg}	–65°C to 150°C

† Stresses beyond those listed under “absolute maximum ratings” may cause permanent damage to the device. These are stress ratings only, and functional operation of the device at these or any other conditions beyond those indicated under “recommended operating conditions” is not implied. Exposure to absolute-maximum-rated conditions for extended periods may affect device reliability.

NOTES: 1. The input and output negative-voltage ratings may be exceeded if the input and output clamp-current ratings are observed.
2. The package thermal impedance is calculated in accordance with JESD 51.

recommended operating conditions (see Note 3)

		MIN	MAX	UNIT
V_{CC}	Supply voltage	4.5	5.5	V
V_{IH}	High-level control input voltage	2		V
V_{IL}	Low-level control input voltage		0.8	V
T_A	Operating free-air temperature	–40	85	°C

NOTE 3: All unused control inputs of the device must be held at V_{CC} or GND to ensure proper device operation. Refer to the TI application report, *Implications of Slow or Floating CMOS Inputs*, literature number SCBA004.

electrical characteristics over recommended operating free-air temperature range (unless otherwise noted)

PARAMETER		TEST CONDITIONS			MIN	TYP†	MAX	UNIT
V_{IK}		V_{CC} = 4.5 V,	I_I = –18 mA				–1.2	V
I_I		V_{CC} = 0	V_I = 5.5 V				10	µA
		V_{CC} = 5.5 V	V_I = 5.5 V or GND				±1	
I_{CC}		V_{CC} = 5.5 V,	I_O = 0,	V_I = V_{CC} or GND			3	µA
ΔI_{CC}‡	Control inputs	V_{CC} = 5.5 V,	One input at 3.4 V,	Other inputs at V_{CC} or GND			2.5	mA
C_i	Control inputs	V_I = 3 V or 0						pF
$C_{io(OFF)}$		V_O = 3 V or 0,	$\overline{OE}$ = V_{CC}					pF
r_{on}§		V_{CC} = 4.5 V	V_I = 0	I_I = 64 mA				Ω
				I_I = 30 mA				
			V_I = 2.4 V,	I_I = 15 mA				

† All typical values are at V_{CC} = 5 V, T_A = 25°C.
‡ This is the increase in supply current for each input that is at the specified TTL voltage level rather than V_{CC} or GND.
§ Measured by the voltage drop between the A and B terminals at the indicated current through the switch. On-state resistance is determined by the lower of the voltages of the two (A or B) terminals.

switching characteristics over recommended operating free-air temperature range, C_L = 50 pF (unless otherwise noted) (see Figure 1)

PARAMETER	FROM (INPUT)	TO (OUTPUT)	MIN	MAX	UNIT
t_{pd}¶	A or B	B or A			ns
t_{en}	$\overline{OE}$	A or B			ns
t_{dis}	$\overline{OE}$	A or B			ns

¶ The propagation delay is the calculated RC time constant of the typical on-state resistance of the switch and the specified load capacitance, when driven by an ideal voltage source (zero output impedance).

PRODUCT PREVIEW

PARAMETER MEASUREMENT INFORMATION

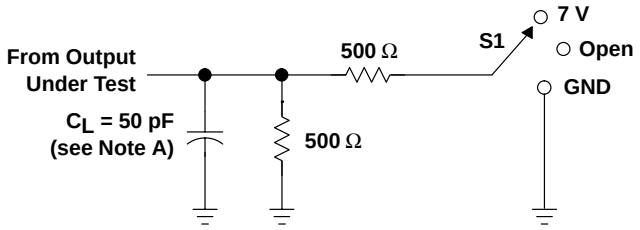

LOAD CIRCUIT

TEST	S1
t_{pd}	Open
t_{PLZ}/t_{PZL}	7 V
t_{PHZ}/t_{PZH}	Open

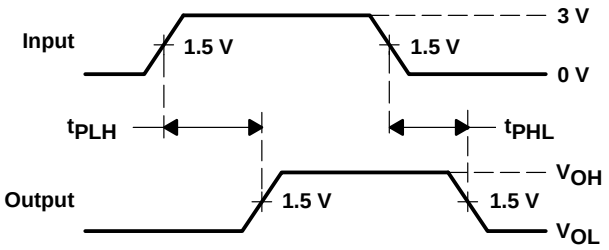

VOLTAGE WAVEFORMS
PROPAGATION DELAY TIMES

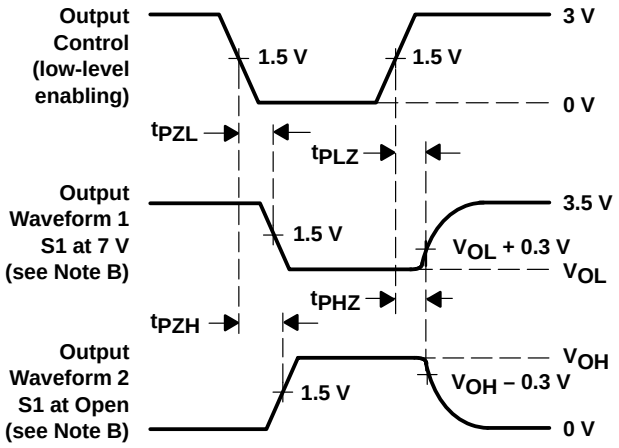

VOLTAGE WAVEFORMS
ENABLE AND DISABLE TIMES

NOTES:
A. C_L includes probe and jig capacitance.
B. Waveform 1 is for an output with internal conditions such that the output is low except when disabled by the output control. Waveform 2 is for an output with internal conditions such that the output is high except when disabled by the output control.
C. All input pulses are supplied by generators having the following characteristics: PRR ≤ 10 MHz, Z_O = 50 Ω, t_r ≤ 2.5 ns, t_f ≤ 2.5 ns.
D. The outputs are measured one at a time with one transition per measurement.
E. t_{PLZ} and t_{PHZ} are the same as t_{dis}.
F. t_{PZL} and t_{PZH} are the same as t_{en}.
G. t_{PLH} and t_{PHL} are the same as t_{pd}.

Figure 1. Load Circuit and Voltage Waveforms

PRODUCT PREVIEW

- **4-Ω Switch Connection Between Two Ports**
- **TTL-Compatible Control Input Levels**
- **Make-Before-Break Feature**
- **Internal 500-Ω Pulldown Resistors to Ground**
- **Latch-Up Performance Exceeds 250 mA Per JESD 17**
- **Package Options Include Plastic Thin Shrink Small-Outline (DGG), Thin Very Small-Outline (DGV), and 300-mil Shrink Small-Outline (DL) Packages**

DGG, DGV, OR DL PACKAGE
(TOP VIEW)

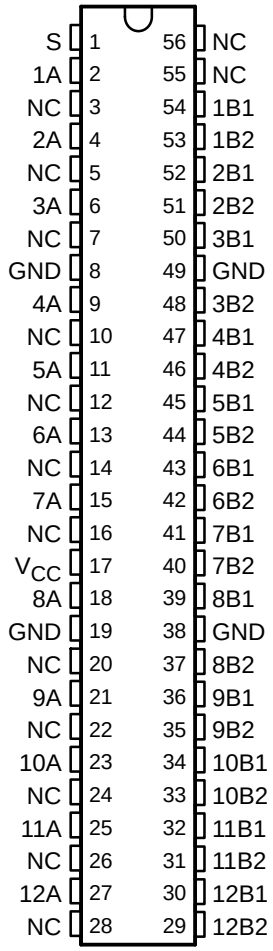

NC – No internal connection

description

The SN74CBT16292 is a 12-bit 1-of-2 high-speed TTL-compatible FET multiplexer/ demultiplexer. The low on-state resistance of the switch allows connections to be made with minimal propagation delay.

When the select (S) input is low, port A is connected to port B1 and R_{INT} is connected to port B2. When S is high, port A is connected to port B2 and R_{INT} is connected to port B1.

The SN74CBT16292 is characterized for operation from –40°C to 85°C.

FUNCTION TABLE

INPUT S	FUNCTION
L	A port = B1 port R_{INT} = B2 port
H	A port = B2 port R_{INT} = B1 port

PRODUCTION DATA information is current as of publication date. Products conform to specifications per the terms of Texas Instruments standard warranty. Production processing does not necessarily include testing of all parameters.

Copyright © 1998, Texas Instruments Incorporated

logic diagram (positive logic)

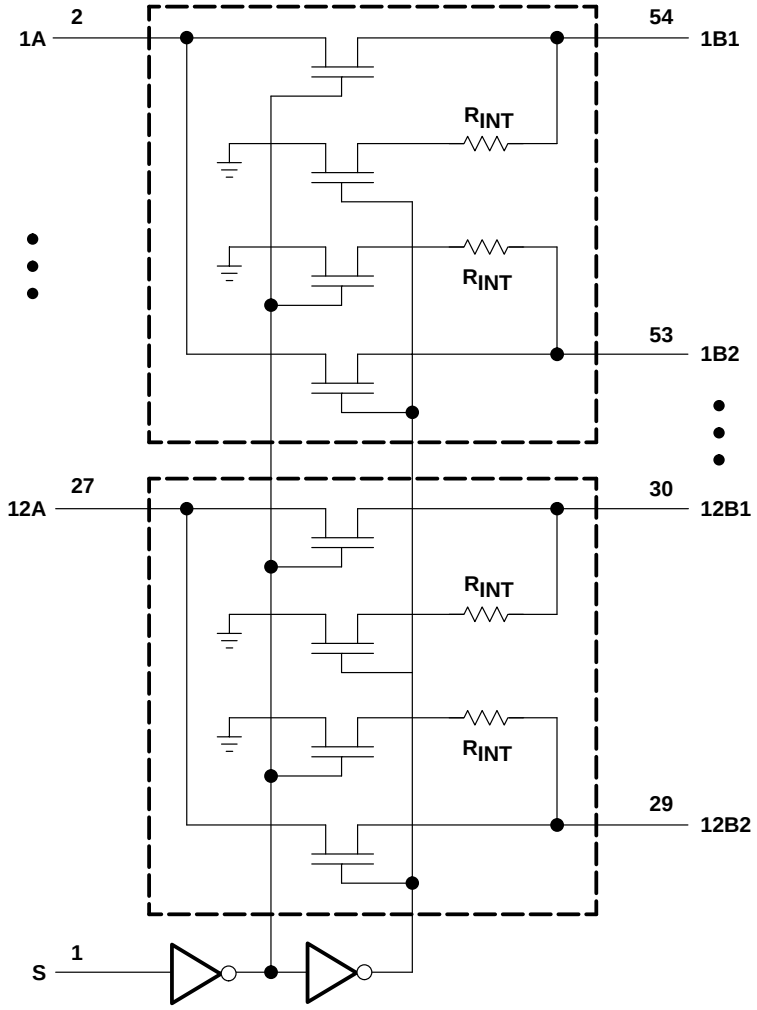

absolute maximum ratings over operating free-air temperature range (unless otherwise noted)†

Supply voltage range, V_{CC}		–0.5 V to 7 V
Input voltage range, V_I (see Note 1)		–0.5 V to 7 V
Continuous channel current		128 mA
Input clamp current, I_{IK} ($V_I < 0$)		–50 mA
Package thermal impedance, θ_{JA} (see Note 2):	DGG package	81°C/W
	DGV package	86°C/W
	DL package	74°C/W
Storage temperature range, T_{stg}		–65°C to 150°C

† Stresses beyond those listed under “absolute maximum ratings” may cause permanent damage to the device. These are stress ratings only, and functional operation of the device at these or any other conditions beyond those indicated under “recommended operating conditions” is not implied. Exposure to absolute-maximum-rated conditions for extended periods may affect device reliability.

NOTES: 1. The input and output negative-voltage ratings may be exceeded if the input and output clamp-current ratings are observed.
2. The package thermal impedance is calculated in accordance with JESD 51.

recommended operating conditions (see Note 3)

		MIN	MAX	UNIT
V_{CC}	Supply voltage	4	5.5	V
V_{IH}	High-level control input voltage	2		V
V_{IL}	Low-level control input voltage		0.8	V
T_A	Operating free-air temperature	–40	85	°C

NOTE 3: All unused control inputs of the device must be held at V_{CC} or GND to ensure proper device operation. Refer to the TI application report, *Implications of Slow or Floating CMOS Inputs*, literature number SCBA004.

electrical characteristics over recommended operating free-air temperature range (unless otherwise noted)

PARAMETER		TEST CONDITIONS			MIN	TYP†	MAX	UNIT
V_{IK}		V_{CC} = 4.5 V,	I_I = –18 mA				–1.2	V
I_I		V_{CC} = 5.5 V,	V_I = V_{CC} or GND				±5	µA
I_{CC}		V_{CC} = 5.5 V,	I_O = 0,	V_I = V_{CC} or GND			3	µA
ΔI_{CC}‡	Control input	V_{CC} = 5.5 V,	One input at 3.4 V,	Other inputs at V_{CC} or GND			2.5	mA
C_i	Control input	V_I = 3 V or 0				3		pF
C_{io}		V_{CC} = 0,	V_O = 3 V or 0			8		pF
r_{on}§		V_{CC} = 4 V, TYP at V_{CC} = 4 V	V_I = 2.4 V,	I_I = 15 mA		10	20	Ω
		V_{CC} = 4.5 V	V_I = 0	I_I = 64 mA		3	7	Ω
				I_I = 30 mA		3	7	Ω
			V_I = 2.4 V,	I_I = 15 mA		5	15	Ω

† All typical values are at V_{CC} = 5 V (unless otherwise noted), T_A = 25°C.
‡ This is the increase in supply current for each input that is at the specified TTL voltage level rather than V_{CC} or GND.
§ Measured by the voltage drop between the A and B terminals at the indicated current through the switch. On-state resistance is determined by the lower of the voltages of the two (A or B) terminals.

switching characteristics over recommended operating free-air temperature range, C_L = 50 pF (unless otherwise noted) (see Figure 1)

PARAMETER	FROM (INPUT)	TO (OUTPUT)	V_{CC} = 4 V		V_{CC} = 5 V ± 0.5 V		UNIT
			MIN	MAX	MIN	MAX	
t_{pd}¶	A or B	B or A		0.5		0.25	ns
t_{en}	S	A or B		6.8	1	6	ns
t_{dis}	S	A or B		7	1	6.3	ns

¶ The propagation delay is the calculated RC time constant of the typical on-state resistance of the switch and the specified load capacitance, when driven by an ideal voltage source (zero output impedance).

switching characteristics over recommended operating free-air temperature range, C_L = 50 pF (unless otherwise noted) (see Figure 1)

PARAMETER	DESCRIPTION	V_{CC} = 4 V		V_{CC} = 5 V ± 0.5 V		UNIT
		MIN	MAX	MIN	MAX	
t_{mbb}#	Make-before-break time	0	2	0	2	ns

The make-before-break time is the time interval between make and break, during the transition from one selected port to the other.

PARAMETER MEASUREMENT INFORMATION

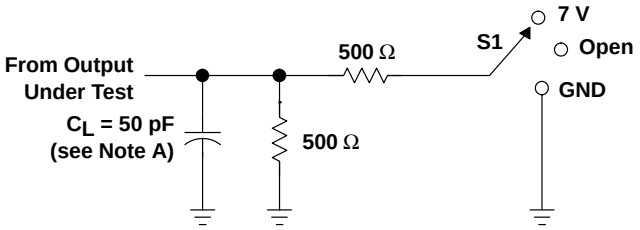

LOAD CIRCUIT

TEST	S1
t_{pd}	Open
t_{PZL}/t_{PLZ}	7 V
t_{PZH}/t_{PHZ}	Open

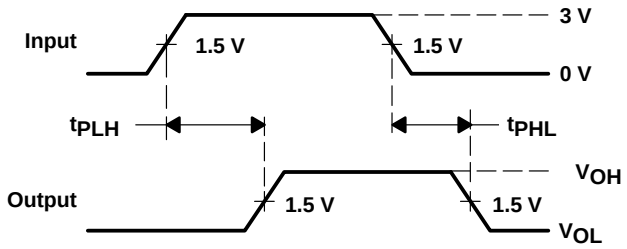

VOLTAGE WAVEFORMS
PROPAGATION DELAY TIMES

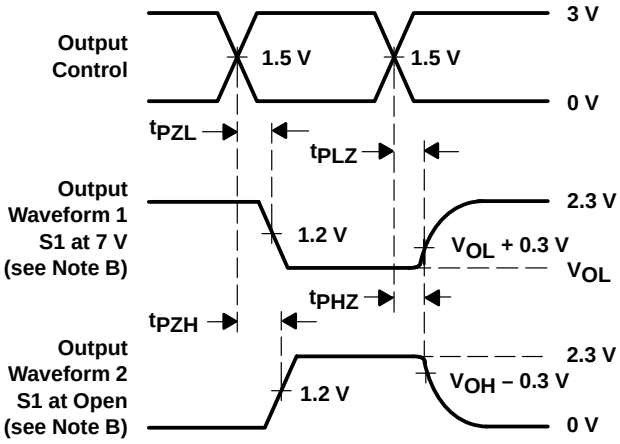

VOLTAGE WAVEFORMS
ENABLE AND DISABLE TIMES

NOTES:
A. C_L includes probe and jig capacitance.
B. Waveform 1 is for an output with internal conditions such that the output is low except when connected to the internal 500-Ω pulldown resistor. Waveform 2 is for an output with internal conditions such that the output is high except when connected to the internal 500-Ω pulldown resistor.
C. All pulse inputs and DC inputs are supplied by generators having the following characteristics: PRR ≤ 10 MHz, Z_O = 50 Ω, t_r ≤ 2.5 ns, t_f ≤ 2.5 ns.
D. The outputs are measured one at a time with one transition per measurement.
E. t_{PLZ} and t_{PHZ} are the same as t_{dis}. Z = R_{INT} = 500 Ω
F. t_{PZL} and t_{PZH} are the same as t_{en}. Z = R_{INT} = 500 Ω
G. t_{PLH} and t_{PHL} are the same as t_{pd}.

Figure 1. Load Circuit and Voltage Waveforms

- **TTL-Compatible Control Input Levels**
- **Isolation Under Power-Off Conditions**
- **Make-Before-Break Feature**
- **Internal 500-Ω Pulldown Resistors to Ground**
- **A-Port Inputs/Outputs Have Equivalent 25-Ω Series Resistors, So No External Resistors Are Required**
- **Latch-Up Performance Exceeds 250 mA Per JESD 17**
- **Package Options Include Plastic Thin Shrink Small-Outline (DGG), Thin Very Small-Outline (DGV), and 300-mil Shrink Small-Outline (DL) Packages**

DGG, DGV, OR DL PACKAGE
(TOP VIEW)

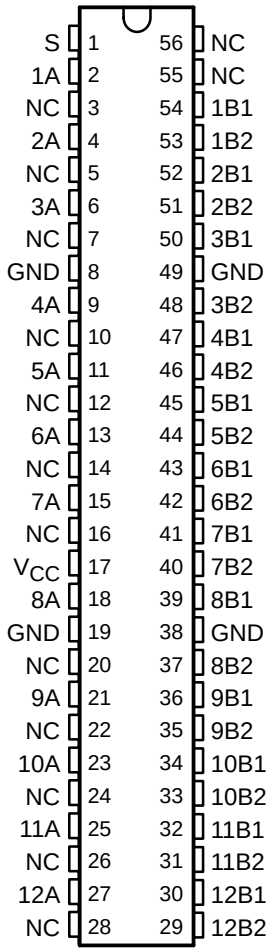

NC – No internal connection

description

The SN74CBT162292 is a 12-bit 1-of-2 high-speed TTL-compatible FET multiplexer/demultiplexer. The low on-state resistance of the switch allows connections to be made with minimal propagation delay.

When the select (S) input is low, port A is connected to port B1 and R_{INT} is connected to port B2. When S is high, port A is connected to port B2 and R_{INT} is connected to port B1.

The A-port inputs/outputs include equivalent 25-Ω series resistors to reduce overshoot and undershoot.

The SN74CBT162292 is characterized for operation from –40°C to 85°C.

FUNCTION TABLE

INPUT S	FUNCTION
L	A port = B1 port R_{INT} = B2 port
H	A port = B2 port R_{INT} = B1 port

PRODUCTION DATA information is current as of publication date. Products conform to specifications per the terms of Texas Instruments standard warranty. Production processing does not necessarily include testing of all parameters.

Copyright © 1998, Texas Instruments Incorporated

logic diagram (positive logic)

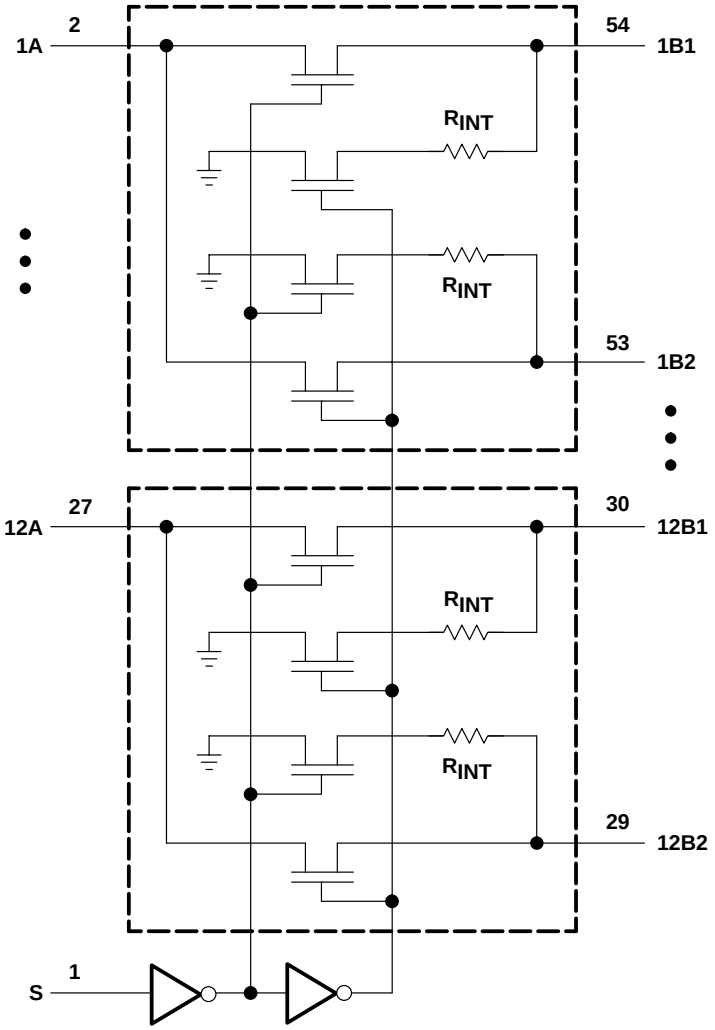

absolute maximum ratings over operating free-air temperature range (unless otherwise noted)†

Supply voltage range, V_{CC}		–0.5 V to 7 V
Input voltage range, V_I (see Note 1)		–0.5 V to 7 V
Continuous channel current		128 mA
Input clamp current, I_{IK} ($V_I < 0$)		–50 mA
Package thermal impedance, θ_{JA} (see Note 2):	DGG package	81°C/W
	DGV package	86°C/W
	DL package	74°C/W
Storage temperature range, T_{stg}		–65°C to 150°C

† Stresses beyond those listed under “absolute maximum ratings” may cause permanent damage to the device. These are stress ratings only, and functional operation of the device at these or any other conditions beyond those indicated under “recommended operating conditions” is not implied. Exposure to absolute-maximum-rated conditions for extended periods may affect device reliability.

NOTES: 1. The input and output negative-voltage ratings may be exceeded if the input and output clamp-current ratings are observed.
2. The package thermal impedance is calculated in accordance with JESD 51.

recommended operating conditions (see Note 3)

		MIN	MAX	UNIT
V_{CC}	Supply voltage	4	5.5	V
V_{IH}	High-level control input voltage	2		V
V_{IL}	Low-level control input voltage		0.8	V
T_A	Operating free-air temperature	–40	85	°C

NOTE 3: All unused control inputs of the device must be held at V_{CC} or GND to ensure proper device operation. Refer to the TI application report, *Implications of Slow or Floating CMOS Inputs*, literature number SCBA004.

electrical characteristics over recommended operating free-air temperature range (unless otherwise noted)

PARAMETER		TEST CONDITIONS			MIN	TYP†	MAX	UNIT
V_{IK}		V_{CC} = 4.5 V,	I_I = –18 mA				–1.2	V
I_I		V_{CC} = 5.5 V,	V_I = V_{CC} or GND				±5	µA
I_{off}		V_{CC} = 0,	V_I or V_O = 0 to 7 V				10	µA
I_{CC}		V_{CC} = 5.5 V,	I_O = 0,	V_I = V_{CC} or GND			3	µA
ΔI_{CC}‡	Control input	V_{CC} = 5.5 V,	One input at 3.4 V,	Other inputs at V_{CC} or GND			2.5	mA
C_i	Control input	V_I = 3 V or 0				3.5		pF
C_{io}		V_{CC} = 0,	V_O = 3 V or 0			8		pF
r_{on}§		V_{CC} = 4 V, TYP at V_{CC} = 4 V	V_I = 2.4 V,	I_I = 15 mA		38	55	Ω
		V_{CC} = 4.5 V	V_I = 0	I_I = 45 mA		39	63	
				I_I = 30 mA		37	55	
			V_I = 2.4 V,	I_I = 15 mA		37	55	

† All typical values are at V_{CC} = 5 V (unless otherwise noted), T_A = 25°C.
‡ This is the increase in supply current for each input that is at the specified TTL voltage level rather than V_{CC} or GND.
§ Measured by the voltage drop between the A and B terminals at the indicated current through the switch. On-state resistance is determined by the lower of the voltages of the two (A or B) terminals.

switching characteristics over recommended operating free-air temperature range, C_L = 50 pF, (unless otherwise noted) (see Figure 1)

PARAMETER	FROM (INPUT)	TO (OUTPUT)	V_{CC} = 4 V		V_{CC} = 5 V ± 0.5 V		UNIT
			MIN	MAX	MIN	MAX	
t_{pd}¶	A or B	B or A		1.9		1.85	ns
t_{en}	S	A or B	1	10.7	1	9.5	ns
t_{dis}	S	A or B	1	10.9	1	9.7	ns

¶ The propagation delay is the calculated RC time constant of the typical on-state resistance of the switch and the specified load capacitance, when driven by an ideal voltage source (zero output impedance).

switching characteristics over recommended operating free-air temperature range, C_L = 50 pF, (unless otherwise noted) (see Figure 1)

PARAMETER	DESCRIPTION	V_{CC} = 4 V		V_{CC} = 5 V ± 0.5 V		UNIT
		MIN	MAX	MIN	MAX	
t_{mbb}#	Make-before-break time	0	2	0	2	ns

The make-before-break time is the time interval between make and break, during the transition from one selected port to the other.

PARAMETER MEASUREMENT INFORMATION

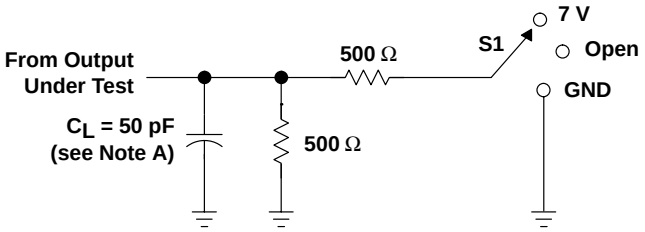

LOAD CIRCUIT

TEST	S1
t_{pd}	Open
t_{PZL}/t_{PLZ}	7 V
t_{PZH}/t_{PHZ}	Open

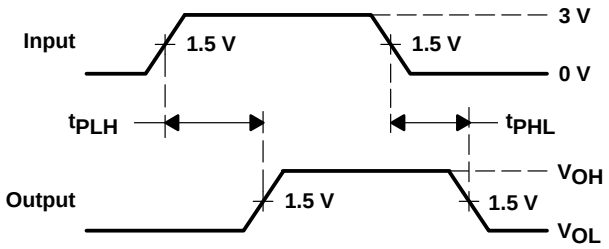

VOLTAGE WAVEFORMS
PROPAGATION DELAY TIMES

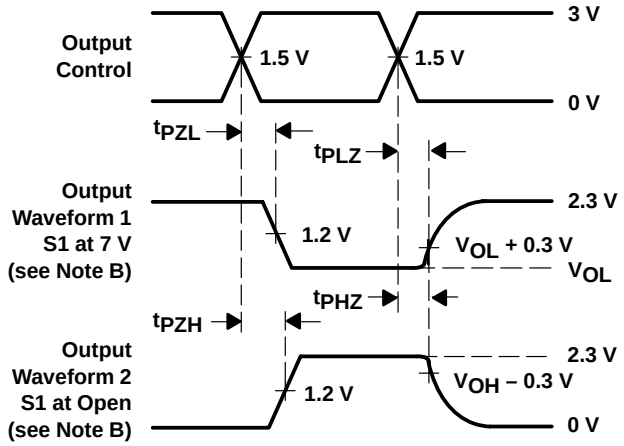

VOLTAGE WAVEFORMS
ENABLE AND DISABLE TIMES

NOTES:
A. C_L includes probe and jig capacitance.
B. Waveform 1 is for an output with internal conditions such that the output is low except when connected to the internal 500-Ω pulldown resistor. Waveform 2 is for an output with internal conditions such that the output is high except when connected to the internal 500-Ω pulldown resistor.
C. All pulse inputs and DC inputs are supplied by generators having the following characteristics: PRR ≤ 10 MHz, Z_O = 50 Ω, t_r ≤ 2.5 ns, t_f ≤ 2.5 ns.
D. The outputs are measured one at a time with one transition per measurement.
E. t_{PLZ} and t_{PHZ} are the same as t_{dis}. Z = R_{INT} = 500 Ω.
F. t_{PZL} and t_{PZH} are the same as t_{en}. Z = R_{INT} = 500 Ω.
G. t_{PLH} and t_{PHL} are the same as t_{pd}.

Figure 1. Load Circuit and Voltage Waveforms

- **5-Ω Switch Connection Between Two Ports**
- **TTL-Compatible Input Levels**
- **ESD Protection Exceeds 2000 V Per MIL-STD-883, Method 3015; Exceeds 200 V Using Machine Model (C = 200 pF, R = 0)**
- **Latch-Up Performance Exceeds 250 mA Per JESD 17**
- **Package Options Include Plastic Thin Shrink Small-Outline (DGG), Thin Very Small-Outline (DGV), and 300-mil Shrink Small-Outline (DL) Packages**

DGG, DGV, OR DL PACKAGE
(TOP VIEW)

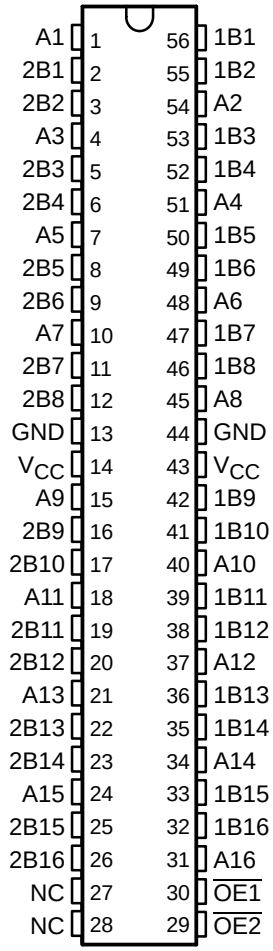

NC – No internal connection

description

The SN74CBT16390 is a 16-bit to 32-bit switch used in applications in which two separate data paths must be multiplexed onto, or demultiplexed from, a single path. This device can be used for memory interleaving, in which two different banks of memory must be addressed simultaneously. This also can be used to connect or isolate the PCI bus to one or two slots simultaneously.

Two output enables ($\overline{OE1}$ and $\overline{OE2}$) control the data flow. When $\overline{OE1}$ is low, A port is connected to 1B port. When $\overline{OE2}$ is low, A port is connected to 2B port. When both $\overline{OE1}$ and $\overline{OE2}$ are low, the A port is connected to both 1B and 2B ports. The control inputs can be driven with a 5-V CMOS, 5-V TTL, or an LVTTL driver.

The SN74CBT16390 is characterized for operation from –40°C to 85°C.

FUNCTION TABLE

INPUTS		FUNCTION
$\overline{OE1}$	$\overline{OE2}$	
L	L	A = 1B and A = 2B
L	H	A = 1B
H	L	A = 2B
H	H	Isolation

PRODUCTION DATA information is current as of publication date. Products conform to specifications per the terms of Texas Instruments standard warranty. Production processing does not necessarily include testing of all parameters.

Copyright © 1998, Texas Instruments Incorporated

logic diagram (positive logic)

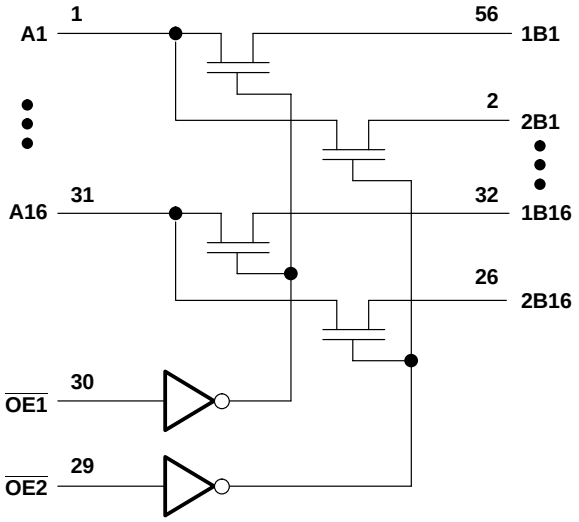

absolute maximum ratings over operating free-air temperature range (unless otherwise noted)†

Supply voltage range, V_{CC} . . . . . –0.5 V to 7 V
Input voltage range, V_I (see Note 1) . . . . . –0.5 V to V_{CC} + 0.5 V
Continuous channel current . . . . . 128 mA
Input clamp current, I_{IK} (V_I < 0) . . . . . –50 mA
Package thermal impedance, θ_{JA} (see Note 2): DGG package . . . . . 81°C/W
DGV package . . . . . 86°C/W
DL package . . . . . 74°C/W
Storage temperature range, T_{stg} . . . . . –65°C to 150°C

† Stresses beyond those listed under "absolute maximum ratings" may cause permanent damage to the device. These are stress ratings only, and functional operation of the device at these or any other conditions beyond those indicated under "recommended operating conditions" is not implied. Exposure to absolute-maximum-rated conditions for extended periods may affect device reliability.

NOTES: 1. The input and output negative-voltage ratings may be exceeded if the input and output clamp-current ratings are observed.
2. The package thermal impedance is calculated in accordance with JESD 51.

recommended operating conditions (see Note 3)

		MIN	MAX	UNIT
V_{CC}	Supply voltage	4.5	5.5	V
V_{IH}	High-level control input voltage	2		V
V_{IL}	Low-level control input voltage		0.8	V
T_A	Operating free-air temperature	–40	85	°C

NOTE 3: All unused control inputs of the device must be held at V_{CC} or GND to ensure proper device operation. Refer to the TI application report, *Implications of Slow or Floating CMOS Inputs*, literature number SCBA004.

electrical characteristics over recommended operating free-air temperature range (unless otherwise noted)

PARAMETER		TEST CONDITIONS			MIN	TYP†	MAX	UNIT
V_{IK}		V_{CC} = 4.5 V,	I_I = –18 mA				–1.2	V
I_I		V_{CC} = 0,	V_I = 5.5 V				10	µA
		V_{CC} = 5.5 V,	V_I = 5.5 V or GND				±1	
I_{CC}		V_{CC} = 5.5 V,	I_O = 0,	V_I = V_{CC} or GND			3	µA
ΔI_{CC}‡	Control inputs	V_{CC} = 5.5 V,	One input at 3.4 V,	Other input at V_{CC} or GND			2.5	mA
C_i	Control inputs	V_I = 3 V or 0				5		pF
$C_{io(OFF)}$		V_O = 3 V or 0				5.5		pF
r_{on}§		V_{CC} = 4.5 V	V_I = 0	I_I = 64 mA		5	7	Ω
				I_I = 30 mA		5	7	
			V_I = 2.4 V,	I_I = 15 mA		7	12	

† All typical values are at V_{CC} = 5 V, T_A = 25°C.
‡ This is the increase in supply current for each input that is at the specified TTL voltage level rather than V_{CC} or GND.
§ Measured by the voltage drop between A and B terminals at the indicated current through the switch. On-state resistance is determined by the lower of the voltages of the two (A or B) terminals.

switching characteristics over recommended operating free-air temperature range (unless otherwise noted) (see Figure 1)

PARAMETER	FROM (INPUT)	TO (OUTPUT)	MIN	MAX	UNIT
t_{pd}¶	A or B	B or A		0.25	ns
t_{en}	$\overline{OE}$	A or B	1.3	5.9	ns
t_{dis}	$\overline{OE}$	A or B	1	5.3	ns

¶ The propagation delay is based on the RC time constant of the typical on-state resistance of the switch and a load capacitance of 50 pF, when driven by an ideal voltage source (zero output impedance).

PARAMETER MEASUREMENT INFORMATION

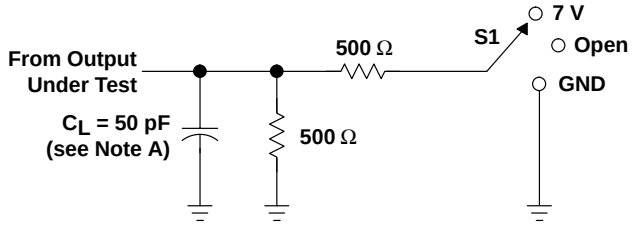

LOAD CIRCUIT

TEST	S1
t_{pd}	Open
t_{PLZ}/t_{PZL}	7 V
t_{PHZ}/t_{PZH}	Open

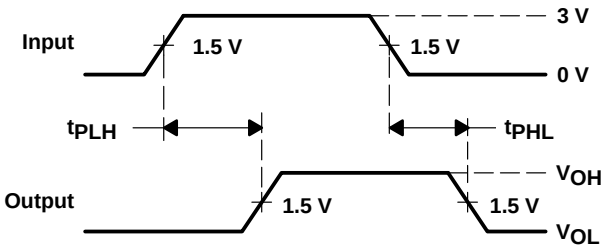

VOLTAGE WAVEFORMS
PROPAGATION DELAY TIMES

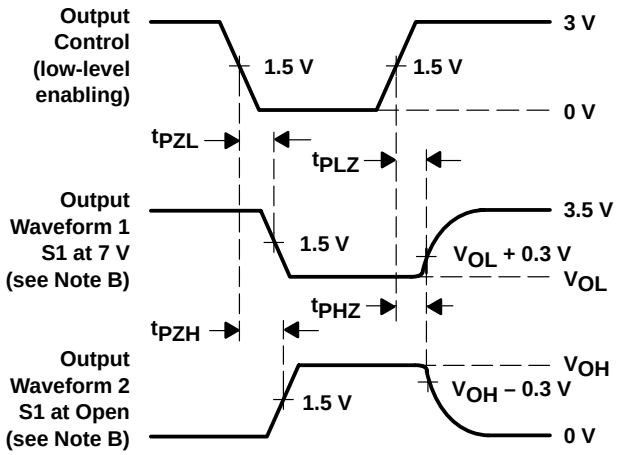

VOLTAGE WAVEFORMS
ENABLE AND DISABLE TIMES

NOTES:
A. C_L includes probe and jig capacitance.
B. Waveform 1 is for an output with internal conditions such that the output is low except when disabled by the output control. Waveform 2 is for an output with internal conditions such that the output is high except when disabled by the output control.
C. All input pulses are supplied by generators having the following characteristics: PRR ≤ 10 MHz, Z_O = 50 Ω, t_r ≤ 2.5 ns, t_f ≤ 2.5 ns.
D. The outputs are measured one at a time with one transition per measurement.
E. t_{PLZ} and t_{PHZ} are the same as t_{dis}.
F. t_{PZL} and t_{PZH} are the same as t_{en}.
G. t_{PLH} and t_{PHL} are the same as t_{pd}.

Figure 1. Load Circuit and Voltage Waveforms

- **5-Ω Switch Connection Between Two Ports**
- **TTL-Compatible Input Levels**
- **Package Options Include Plastic Thin Shrink Small-Outline (DGG) and Shrink Small-Outline (DL) Packages**

description

The SN74CBT16861 provides 20 bits of high-speed TTL-compatible bus switching. The low on-state resistance of the switch allows connections to be made with minimal propagation delay.

The device is organized as one dual 10-bit switch with separate output-enable ($\overline{OE}$) input. When $\overline{OE}$ is low, the switch is on and port A is connected to port B. When $\overline{OE}$ is high, the switch is open, and a high-impedance state exists between the two ports.

The SN74CBT16861 is characterized for operation from –40°C to 85°C.

DGG OR DL PACKAGE
(TOP VIEW)

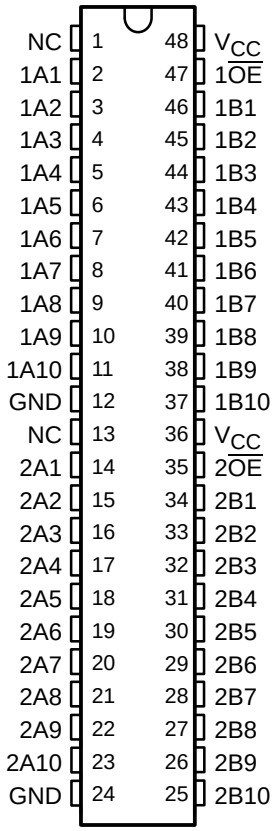

NC – No internal connection

FUNCTION TABLE
(each 10-bit bus switch)

INPUT $\overline{OE}$	FUNCTION
L	A port = B port
H	Disconnect

PRODUCT PREVIEW

PRODUCT PREVIEW information concerns products in the formative or design phase of development. Characteristic data and other specifications are design goals. Texas Instruments reserves the right to change or discontinue these products without notice.

Copyright © 1998, Texas Instruments Incorporated

PRODUCT PREVIEW

logic diagram (positive logic)

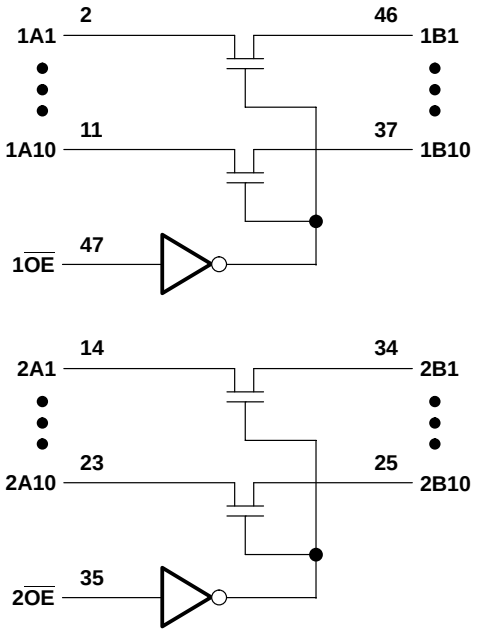

absolute maximum ratings over operating free-air temperature range (unless otherwise noted)†

Supply voltage range, V_{CC} . . . . . –0.5 V to 7 V
Input voltage range, V_I (see Note 1) . . . . . –0.5 V to 7 V
Continuous channel current . . . . . 128 mA
Input clamp current, I_{IK} ($V_{I/O} < 0$) . . . . . –50 mA
Package thermal impedance, θ_{JA} (see Note 2): DGG package . . . . . 89°C/W
DL package . . . . . 94°C/W
Storage temperature range, T_{stg} . . . . . –65°C to 150°C

† Stresses beyond those listed under “absolute maximum ratings” may cause permanent damage to the device. These are stress ratings only, and functional operation of the device at these or any other conditions beyond those indicated under “recommended operating conditions” is not implied. Exposure to absolute-maximum-rated conditions for extended periods may affect device reliability.

NOTES: 1. The input and output negative-voltage ratings may be exceeded if the input and output clamp-current ratings are observed.
2. The package thermal impedance is calculated in accordance with JESD 51.

recommended operating conditions (see Note 3)

		MIN	MAX	UNIT
V_{CC}	Supply voltage	4	5.5	V
V_{IH}	High-level control input voltage	2		V
V_{IL}	Low-level control input voltage		0.8	V
T_A	Operating free-air temperature	–40	85	°C

NOTE 3: All unused control inputs of the device must be held at V_{CC} or GND to ensure proper device operation. Refer to the TI application report, *Implications of Slow or Floating CMOS Inputs*, literature number SCBA004.

electrical characteristics over recommended operating free-air temperature range (unless otherwise noted)

PARAMETER		TEST CONDITIONS			MIN	TYP†	MAX	UNIT
V_{IK}		V_{CC} = 4.5 V,	I_I = –18 mA				–1.2	V
I_I		V_{CC} = 0	V_I = 5.5 V				10	µA
		V_{CC} = 5.5 V	V_I = 5.5 V or GND				±1	
I_{CC}		V_{CC} = 5.5 V,	I_O = 0,	V_I = V_{CC} or GND			3	µA
ΔI_{CC}‡	Control inputs	V_{CC} = 5.5 V,	One input at 3.4 V,	Other inputs at V_{CC} or GND			2.5	mA
C_i	Control inputs	V_I = 3 V or 0						pF
$C_{io(OFF)}$		V_O = 3 V or 0,	$\overline{OE}$ = V_{CC}					pF
r_{on}§		V_{CC} = 4 V, TYP at V_{CC} = 4 V	V_I = 2.4 V,	I_I = 15 mA				Ω
		V_{CC} = 4.5 V	V_I = 0	I_I = 64 mA				
				I_I = 30 mA				
			V_I = 2.4 V,	I_I = 15 mA				

† All typical values are at V_{CC} = 5 V (unless otherwise noted), T_A = 25°C.
‡ This is the increase in supply current for each input that is at the specified TTL voltage level rather than V_{CC} or GND.
§ Measured by the voltage drop between the A and B terminals at the indicated current through the switch. On-state resistance is determined by the lowest voltage of the two (A or B) terminals.

switching characteristics over recommended operating free-air temperature range, C_L = 50 pF (unless otherwise noted) (see Figure 1)

PARAMETER	FROM (INPUT)	TO (OUTPUT)	V_{CC} = 4 V		V_{CC} = 5 V ± 0.5 V		UNIT
			MIN	MAX	MIN	MAX	
t_{pd}¶	A or B	B or A					ns
t_{en}	$\overline{OE}$	A or B					ns
t_{dis}	$\overline{OE}$	A or B					ns

¶ The propagation delay is the calculated RC time constant of the typical on-state resistance of the switch and the specified load capacitance, when driven by an ideal voltage source (zero output impedance).

PRODUCT PREVIEW

PARAMETER MEASUREMENT INFORMATION

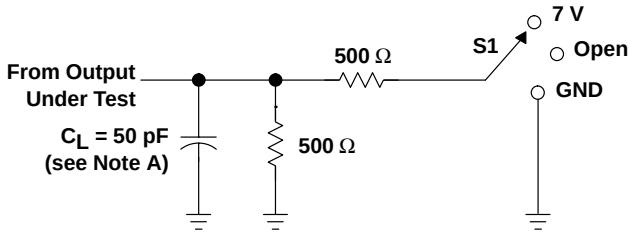

LOAD CIRCUIT

TEST	S1
t_{pd}	Open
t_{PLZ}/t_{PZL}	7 V
t_{PHZ}/t_{PZH}	Open

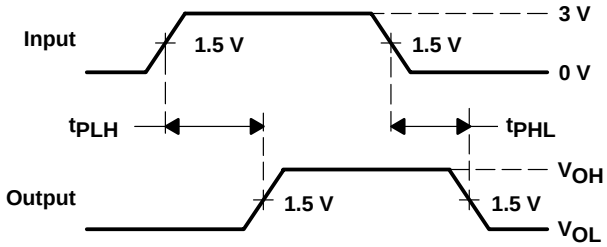

VOLTAGE WAVEFORMS
PROPAGATION DELAY TIMES

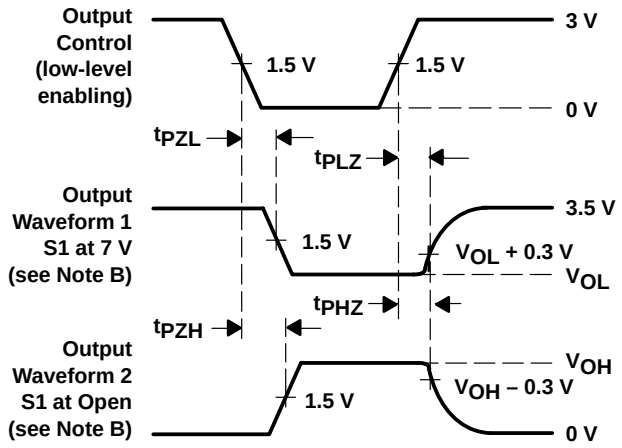

VOLTAGE WAVEFORMS
ENABLE AND DISABLE TIMES

NOTES: A. C_L includes probe and jig capacitance.
B. Waveform 1 is for an output with internal conditions such that the output is low except when disabled by the output control. Waveform 2 is for an output with internal conditions such that the output is high except when disabled by the output control.
C. All input pulses are supplied by generators having the following characteristics: PRR ≤ 10 MHz, Z_O = 50 Ω, t_r ≤ 2.5 ns, t_f ≤ 2.5 ns.
D. The outputs are measured one at a time with one transition per measurement.
E. t_{PLZ} and t_{PHZ} are the same as t_{dis}.
F. t_{PZL} and t_{PZH} are the same as t_{en}.
G. t_{PLH} and t_{PHL} are the same as t_{pd}.

Figure 1. Load Circuit and Voltage Waveforms

PRODUCT PREVIEW

- **25-Ω Switch Connection Between Two Ports**
- **TTL-Compatible Input Levels**
- **Package Options Include Plastic Thin Shrink Small-Outline (DGG) and Shrink Small-Outline (DL) Packages**

DGG OR DL PACKAGE
(TOP VIEW)

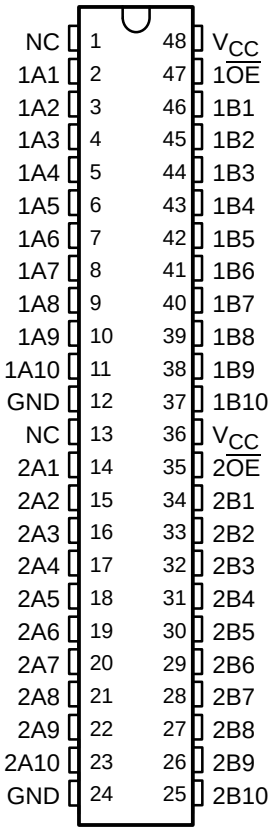

NC – No internal connection

description

The SN74CBTR16861 provides 20 bits of high-speed TTL-compatible bus switching. The low on-state resistance of the switch allows connections to be made with minimal propagation delay.

The device is organized as one dual 10-bit switch with separate output-enable ($\overline{OE}$) input. When $\overline{OE}$ is low, the switch is on and port A is connected to port B. When $\overline{OE}$ is high, the switch is open, and a high-impedance state exists between the two ports.

The device has equivalent 25-Ω series resistors to reduce signal-reflection noise. This eliminates the need for external terminating resistors.

The SN74CBTR16861 is characterized for operation from –40°C to 85°C.

FUNCTION TABLE
(each 10-bit bus switch)

INPUT $\overline{OE}$	FUNCTION
L	A port = B port
H	Disconnect

PRODUCT PREVIEW

PRODUCT PREVIEW information concerns products in the formative or design phase of development. Characteristic data and other specifications are design goals. Texas Instruments reserves the right to change or discontinue these products without notice.

Copyright © 1998, Texas Instruments Incorporated

PRODUCT PREVIEW

logic diagram (positive logic)

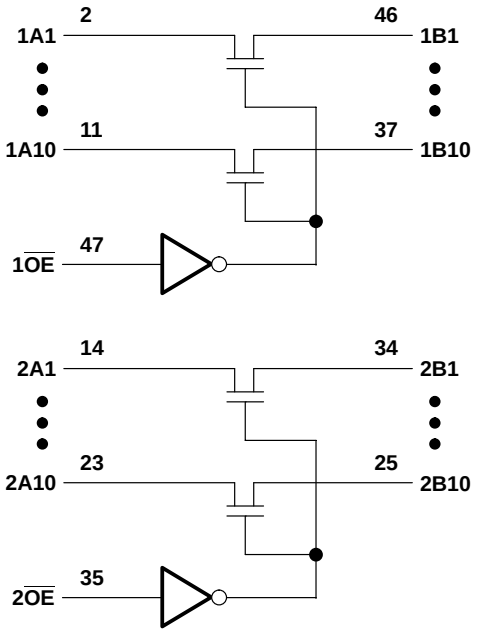

absolute maximum ratings over operating free-air temperature range (unless otherwise noted)†

Supply voltage range, V_{CC} . . . . . –0.5 V to 7 V
Input voltage range, V_I (see Note 1) . . . . . –0.5 V to 7 V
Continuous channel current . . . . . 128 mA
Input clamp current, I_{IK} ($V_{I/O} < 0$) . . . . . –50 mA
Package thermal impedance, θ_{JA} (see Note 2): DGG package . . . . . 89°C/W
DL package . . . . . 94°C/W
Storage temperature range, T_{stg} . . . . . –65°C to 150°C

† Stresses beyond those listed under “absolute maximum ratings” may cause permanent damage to the device. These are stress ratings only, and functional operation of the device at these or any other conditions beyond those indicated under “recommended operating conditions” is not implied. Exposure to absolute-maximum-rated conditions for extended periods may affect device reliability.

NOTES: 1. The input and output negative-voltage ratings may be exceeded if the input and output clamp-current ratings are observed.
2. The package thermal impedance is calculated in accordance with JESD 51.

recommended operating conditions (see Note 3)

		MIN	MAX	UNIT
V_{CC}	Supply voltage	4.5	5.5	V
V_{IH}	High-level control input voltage	2		V
V_{IL}	Low-level control input voltage		0.8	V
T_A	Operating free-air temperature	–40	85	°C

NOTE 3: All unused control inputs of the device must be held at V_{CC} or GND to ensure proper device operation. Refer to the TI application report, *Implications of Slow or Floating CMOS Inputs*, literature number SCBA004.

electrical characteristics over recommended operating free-air temperature range (unless otherwise noted)

PARAMETER		TEST CONDITIONS			MIN	TYP†	MAX	UNIT
V_{IK}		V_{CC} = 4.5 V,	I_I = –18 mA				–1.2	V
I_I		V_{CC} = 0,	V_I = 5.5 V				10	µA
		V_{CC} = 5.5 V,	V_I = 5.5 V or GND				±1	
I_{CC}		V_{CC} = 5.5 V,	I_O = 0,	V_I = V_{CC} or GND			3	µA
ΔI_{CC}‡	Control inputs	V_{CC} = 5.5 V,	One input at 3.4 V,	Other inputs at V_{CC} or GND			2.5	mA
C_i	Control inputs	V_I = 3 V or 0						pF
$C_{io(OFF)}$		V_O = 3 V or 0,	$\overline{OE}$ = V_{CC}					pF
r_{on}§		V_{CC} = 4.5 V	V_I = 0	I_I = 64 mA				Ω
				I_I = 30 mA				
			V_I = 2.4 V,	I_I = 15 mA				

† All typical values are at V_{CC} = 5 V (unless otherwise noted), T_A = 25°C.
‡ This is the increase in supply current for each input that is at the specified TTL voltage level rather than V_{CC} or GND.
§ Measured by the voltage drop between the A and B terminals at the indicated current through the switch. On-state resistance is determined by the lowest voltage of the two (A or B) terminals.

switching characteristics over recommended operating free-air temperature range, C_L = 50 pF (unless otherwise noted) (see Figure 1)

PARAMETER	FROM (INPUT)	TO (OUTPUT)	MIN	MAX	UNIT
t_{pd}¶	A or B	B or A			ns
t_{en}	$\overline{OE}$	A or B			ns
t_{dis}	$\overline{OE}$	A or B			ns

¶ The propagation delay is the calculated RC time constant of the typical on-state resistance of the switch and the specified load capacitance, when driven by an ideal voltage source (zero output impedance).

PRODUCT PREVIEW

PARAMETER MEASUREMENT INFORMATION

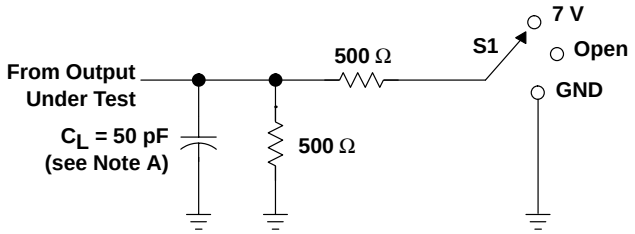

LOAD CIRCUIT

TEST	S1
t_{pd}	Open
t_{PLZ}/t_{PZL}	7 V
t_{PHZ}/t_{PZH}	Open

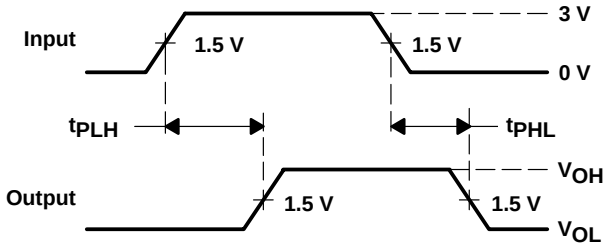

VOLTAGE WAVEFORMS
PROPAGATION DELAY TIMES

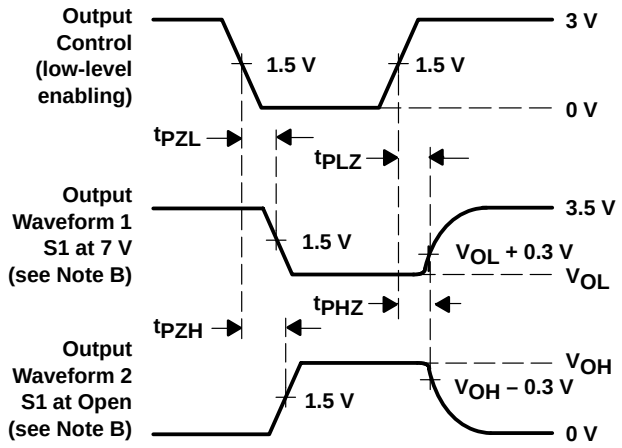

VOLTAGE WAVEFORMS
ENABLE AND DISABLE TIMES

NOTES: A. C_L includes probe and jig capacitance.
B. Waveform 1 is for an output with internal conditions such that the output is low except when disabled by the output control. Waveform 2 is for an output with internal conditions such that the output is high except when disabled by the output control.
C. All input pulses are supplied by generators having the following characteristics: PRR ≤ 10 MHz, Z_O = 50 Ω, t_r ≤ 2.5 ns, t_f ≤ 2.5 ns.
D. The outputs are measured one at a time with one transition per measurement.
E. t_{PLZ} and t_{PHZ} are the same as t_{dis}.
F. t_{PZL} and t_{PZH} are the same as t_{en}.
G. t_{PLH} and t_{PHL} are the same as t_{pd}.

Figure 1. Load Circuit and Voltage Waveforms

PRODUCT PREVIEW

General Information 1
CBT Single Gates 2
CBT (2 to 10 Bit) 3
CBT Widebus™ 4
CBT With Integrated Diodes 5
CBTLV Single Gates 6
CBTLV (2 to 10 Bit) 7
CBTLV Widebus™ 8
Application Reports 9
Mechanical Data 10

Contents

			Page
	SN74CBTD3306	Dual FET Bus Switch With Level Shifting	5–3
	SN74CBTS3306	Dual FET Bus Switch With Schottky Diode Clamping	5–7
SN54CBTD3384	SN74CBTD3384	10-Bit FET Bus Switches With Level Shifting	5–11
	SN74CBTS3384	10-Bit FET Bus Switch With Schottky Diode Clamping	5–17
	SN74CBTD3861	10-Bit FET Bus Switch With Level Shifting	5–21
	SN74CBTD16210	20-Bit FET Bus Switch With Level Shifting	5–25
	SN74CBTD16211	24-Bit FET Bus Switch With Level Shifting	5–31
	SN74CBTS16211	24-Bit FET Bus Switch With Schottky Diode Clamping	5–37
	SN74CBTS16212	24-Bit FET Bus-Exchange Switch With Schottky Diode Clamping	5–41
	SN74CBTS16213	24-Bit FET Bus-Exchange Switch With Schottky Diode Clamping	5–45
	SN74CBTD16861	20-Bit FET Bus Switch With Level Shifting	5–49

- **5-Ω Switch Connection Between Two Ports**
- **TTL-Compatible Input Levels**
- **Designed to Be Used in Level-Shifting Applications**
- **Package Options Include Plastic Small-Outline (D) and Thin Shrink Small-Outline (PW) Packages**

D OR PW PACKAGE
(TOP VIEW)

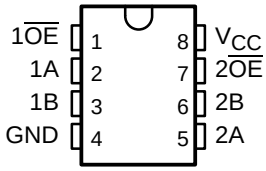

description

The SN74CBTD3306 features two independent line switches. Each switch is disabled when the associated output-enable ($\overline{OE}$) input is high. A diode to V_{CC} is integrated on the chip to allow for level shifting between 5-V inputs and 3.3-V outputs.

The SN74CBTD3306 is characterized for operation from –40°C to 85°C.

FUNCTION TABLE
(each bus switch)

INPUT $\overline{OE}$	FUNCTION
L	A port = B port
H	Disconnect

logic diagram (positive logic)

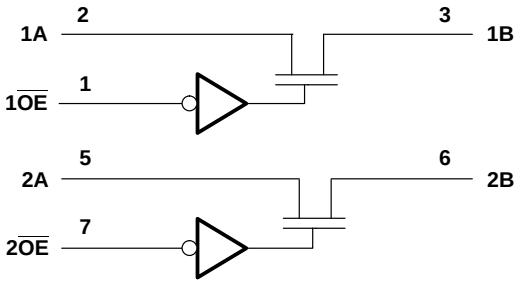

PRODUCTION DATA information is current as of publication date. Products conform to specifications per the terms of Texas Instruments standard warranty. Production processing does not necessarily include testing of all parameters.

Copyright © 1998, Texas Instruments Incorporated

absolute maximum ratings over operating free-air temperature range (unless otherwise noted)†

Supply voltage range, V_{CC} . . . . . –0.5 V to 7 V
Input voltage range, V_I (see Note 1) . . . . . –0.5 V to 7 V
Continuous channel current . . . . . 128 mA
Input clamp current, I_{IK} ($V_{I/O} < 0$) . . . . . –50 mA
Package thermal impedance, θ_{JA} (see Note 2): D package . . . . . 197°C/W
PW package . . . . . 243°C/W
Storage temperature range, T_{stg} . . . . . –65°C to 150°C

† Stresses beyond those listed under "absolute maximum ratings" may cause permanent damage to the device. These are stress ratings only, and functional operation of the device at these or any other conditions beyond those indicated under "recommended operating conditions" is not implied. Exposure to absolute-maximum-rated conditions for extended periods may affect device reliability.

NOTES: 1. The input and output negative-voltage ratings may be exceeded if the input and output clamp-current ratings are observed.
2. The package thermal impedance is calculated in accordance with JESD 51.

recommended operating conditions (see Note 3)

		MIN	MAX	UNIT
V_{CC}	Supply voltage	4.5	5.5	V
V_{IH}	High-level control input voltage	2		V
V_{IL}	Low-level control input voltage		0.8	V
T_A	Operating free-air temperature	–40	85	°C

NOTE 3: All unused control inputs of the device must be held at V_{CC} or GND to ensure proper device operation. Refer to the TI application report, *Implications of Slow or Floating CMOS Inputs*, literature number SCBA004.

electrical characteristics over recommended operating free-air temperature range (unless otherwise noted)

PARAMETER		TEST CONDITIONS			MIN	TYP‡	MAX	UNIT
V_{IK}		V_{CC} = 4.5 V,	I_I = –18 mA				–1.2	V
V_{OH}		See Figure 2						
I_I		V_{CC} = 5.5 V,	V_I = 5.5 V or GND				±1	μA
I_{CC}		V_{CC} = 5.5 V,	I_O = 0,	V_I = V_{CC} or GND			1.5	mA
ΔI_{CC}§	Control inputs	V_{CC} = 5.5 V,	One input at 3.4 V,	Other inputs at V_{CC} or GND			2.5	mA
C_i	Control inputs	V_I = 3 V or 0				3		pF
$C_{io(OFF)}$		V_O = 3 V or 0,	$\overline{OE}$ = V_{CC}			4		pF
r_{on}¶		V_{CC} = 4.5 V	V_I = 0	I_I = 64 mA		5	7	Ω
				I_I = 30 mA		5	7	
			V_I = 2.4 V,	I_I = 15 mA		35	50	

‡ All typical values are at V_{CC} = 5 V, T_A = 25°C.
§ This is the increase in supply current for each input that is at the specified TTL voltage level rather than V_{CC} or GND.
¶ Measured by the voltage drop between the A and B terminals at the indicated current through the switch. On-state resistance is determined by the lower of the voltages of the two (A or B) terminals.

switching characteristics over recommended ranges of supply voltage and operating free-air temperature range, C_L = 50 pF (unless otherwise noted) (see Figure 1)

PARAMETER	FROM (INPUT)	TO (OUTPUT)	MIN	MAX	UNIT
t_{pd}†	A or B	B or A		0.25	ns
t_{en}	$\overline{OE}$	A or B	2.1	5.4	ns
t_{dis}	$\overline{OE}$	A or B	1	4.7	ns

† The propagation delay is the calculated RC time constant of the typical on-state resistance of the switch and the specified load capacitance, when driven by an ideal voltage source (zero output impedance).

PARAMETER MEASUREMENT INFORMATION

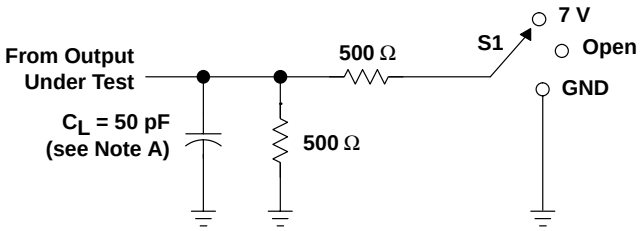

LOAD CIRCUIT

TEST	S1
t_{pd}	Open
t_{PLZ}/t_{PZL}	7 V
t_{PHZ}/t_{PZH}	Open

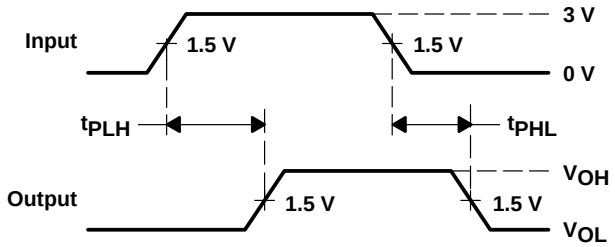

VOLTAGE WAVEFORMS
PROPAGATION DELAY TIMES

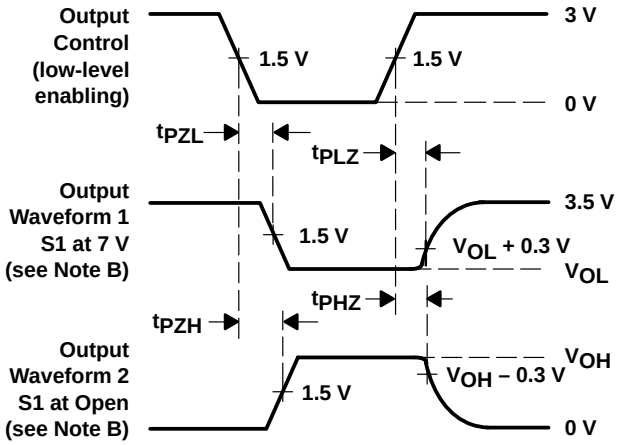

VOLTAGE WAVEFORMS
ENABLE AND DISABLE TIMES

NOTES: A. C_L includes probe and jig capacitance.
B. Waveform 1 is for an output with internal conditions such that the output is low except when disabled by the output control. Waveform 2 is for an output with internal conditions such that the output is high except when disabled by the output control.
C. All input pulses are supplied by generators having the following characteristics: PRR ≤ 10 MHz, Z_O = 50 Ω, t_r ≤ 2.5 ns, t_f ≤ 2.5 ns.
D. The outputs are measured one at a time with one transition per measurement.
E. t_{PLZ} and t_{PHZ} are the same as t_{dis}.
F. t_{PZL} and t_{PZH} are the same as t_{en}.
G. t_{PHL} and t_{PLH} are the same as t_{pd}.

Figure 1. Load Circuit and Voltage Waveforms

TYPICAL CHARACTERISTICS

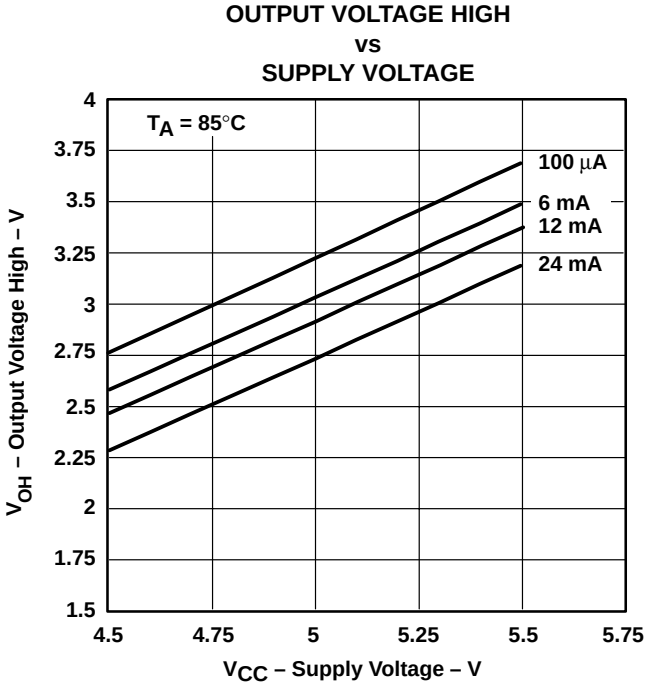

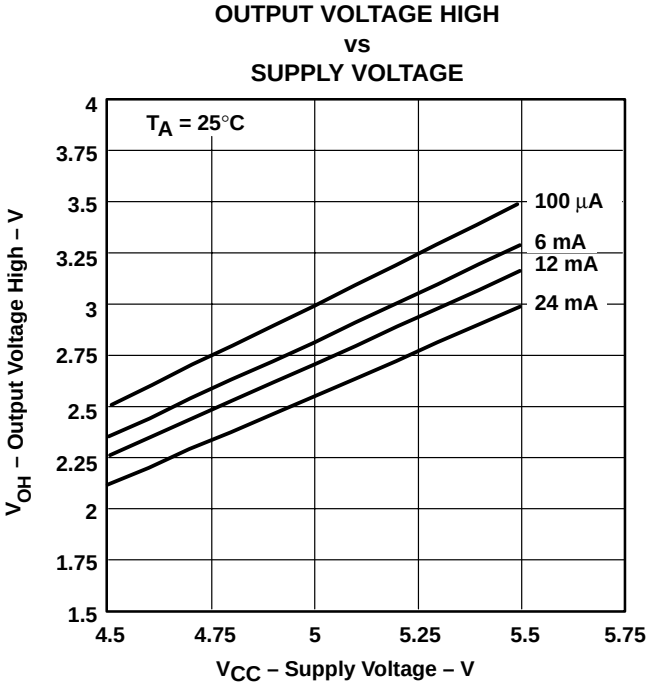

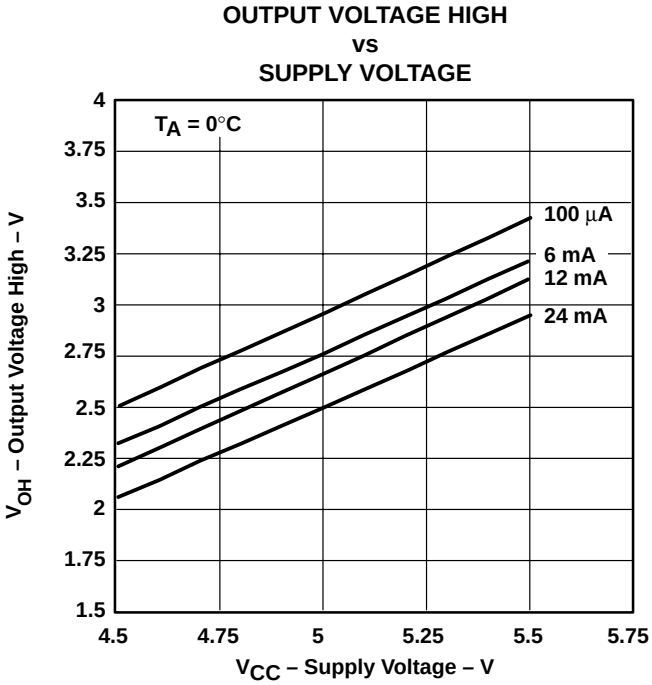

Figure 2. V_{OH} Values

- **5-Ω Switch Connection Between Two Ports**
- **TTL-Compatible Input Levels**
- **Package Options Include Plastic Small-Outline (D) and Thin Shrink Small-Outline (PW) Packages**

D OR PW PACKAGE
(TOP VIEW)

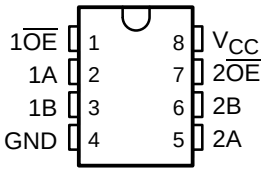

description

The SN74CBTS3306 features independent line switches with Schottky diodes on the I/Os to clamp undershoot. Each switch is disabled when the associated output-enable ($\overline{OE}$) input is high.

The SN74CBTS3306 is characterized for operation from –40°C to 85°C.

FUNCTION TABLE
(each bus switch)

INPUT $\overline{OE}$	FUNCTION
L	A port = B port
H	Disconnect

logic diagram (positive logic)

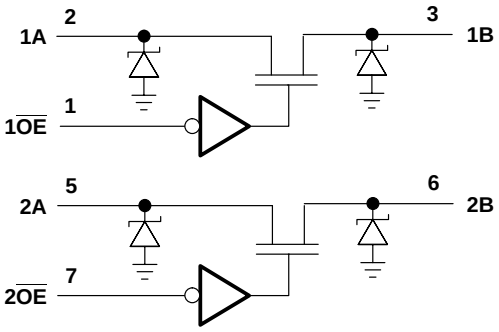

PRODUCTION DATA information is current as of publication date. Products conform to specifications per the terms of Texas Instruments standard warranty. Production processing does not necessarily include testing of all parameters.

Copyright © 1998, Texas Instruments Incorporated

absolute maximum ratings over operating free-air temperature range (unless otherwise noted)†

Supply voltage range, V_{CC} . . . . . –0.5 V to 7 V
Input voltage range, V_I (see Note 1) . . . . . –0.5 V to 7 V
Continuous channel current . . . . . 128 mA
Input clamp current, I_{IK} ($V_{I/O}$ < 0) . . . . . –50 mA
Package thermal impedance, θ_{JA} (see Note 2): D package . . . . . 197°C/W
PW package . . . . . 243°C/W
Storage temperature range, T_{stg} . . . . . –65°C to 150°C

† Stresses beyond those listed under "absolute maximum ratings" may cause permanent damage to the device. These are stress ratings only, and functional operation of the device at these or any other conditions beyond those indicated under "recommended operating conditions" is not implied. Exposure to absolute-maximum-rated conditions for extended periods may affect device reliability.

NOTES: 1. The input and output negative-voltage ratings may be exceeded if the input and output clamp-current ratings are observed.
2. The package thermal impedance is calculated in accordance with JESD 51.

recommended operating conditions (see Note 3)

		MIN	MAX	UNIT
V_{CC}	Supply voltage	4	5.5	V
V_{IH}	High-level control input voltage	2		V
V_{IL}	Low-level control input voltage		0.8	V
T_A	Operating free-air temperature	–40	85	°C

NOTE 3: All unused control inputs of the device must be held at V_{CC} or GND to ensure proper device operation. Refer to the TI application report, *Implications of Slow or Floating CMOS Inputs*, literature number SCBA004.

electrical characteristics over recommended operating free-air temperature range (unless otherwise noted)

PARAMETER		TEST CONDITIONS			MIN	TYP‡	MAX	UNIT
V_{IK}	A or B inputs	V_{CC} = 4.5 V,	I_I = –18 mA				–0.7	V
	Control inputs						–1.2	
I_I	I_{IL}	V_{CC} = 5.5 V,	V_I = GND				–1	µA
	I_{IH}	V_{CC} = 5.5 V,	V_I = 5.5 V				50	
I_{CC}		V_{CC} = 5.5 V,	I_O = 0,	V_I = V_{CC} or GND			3	µA
ΔI_{CC}§	Control inputs	V_{CC} = 5.5 V,	One input at 3.4 V,	Other inputs at V_{CC} or GND			2.5	mA
C_i	Control inputs	V_I = 3 V or 0				5		pF
$C_{io(OFF)}$		V_O = 3 V or 0,	$\overline{OE}$ = V_{CC}			6		pF
r_{on}¶		V_{CC} = 4 V, TYP at V_{CC} = 4 V	V_I = 2.4 V,	I_I = 15 mA		14	20	Ω
		V_{CC} = 4.5 V	V_I = 0	I_I = 64 mA		5	7	
				I_I = 30 mA		5	7	
			V_I = 2.4 V,	I_I = 15 mA		10	15	

‡ All typical values are at V_{CC} = 5 V (unless otherwise noted), T_A = 25°C.
§ This is the increase in supply current for each input that is at the specified TTL voltage level rather than V_{CC} or GND.
¶ Measured by the voltage drop between the A and B pin at the indicated current through the switch. On-state resistance is determined by the lower of the voltages of the two (A or B) pins.

switching characteristics over recommended operating free-air temperature range, C_L = 50 pF (unless otherwise noted) (see Figure 1)

PARAMETER	FROM (INPUT)	TO (OUTPUT)	V_{CC} = 4 V		V_{CC} = 5 V ± 0.5 V		UNIT
			MIN	MAX	MIN	MAX	
t_{pd}†	A or B	B or A		0.35		0.25	ns
t_{en}	$\overline{OE}$	A or B		5.6	1.8	5	ns
t_{dis}	$\overline{OE}$	A or B		4.6	1	4.3	ns

† The propagation delay is the calculated RC time constant of the typical on-state resistance of the switch and the specified load capacitance, when driven by an ideal voltage source (zero output impedance).

PARAMETER MEASUREMENT INFORMATION

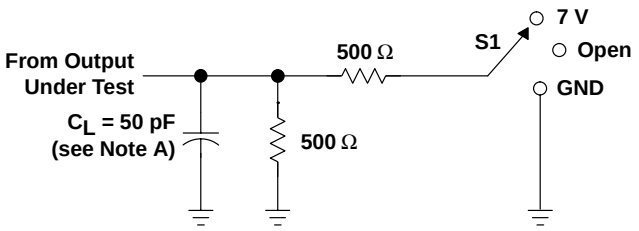

LOAD CIRCUIT

TEST	S1
t_{pd}	Open
t_{PLZ}/t_{PZL}	7 V
t_{PHZ}/t_{PZH}	0open

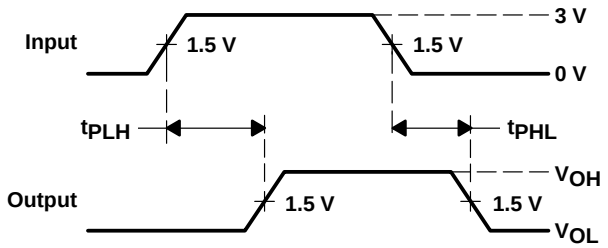

VOLTAGE WAVEFORMS
PROPAGATION DELAY TIMES

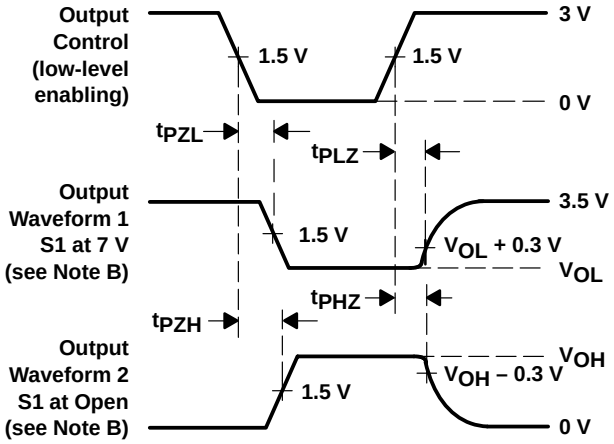

VOLTAGE WAVEFORMS
ENABLE AND DISABLE TIMES

NOTES: A. C_L includes probe and jig capacitance.
B. Waveform 1 is for an output with internal conditions such that the output is low except when disabled by the output control. Waveform 2 is for an output with internal conditions such that the output is high except when disabled by the output control.
C. All input pulses are supplied by generators having the following characteristics: PRR ≤ 10 MHz, Z_O = 50 Ω, t_r ≤ 2.5 ns, t_f ≤ 2.5 ns.
D. The outputs are measured one at a time with one transition per measurement.
E. t_{PLZ} and t_{PHZ} are the same as t_{dis}.
F. t_{PZL} and t_{PZH} are the same as t_{en}.
G. t_{PHL} and t_{PLH} are the same as t_{pd}.

Figure 1. Load Circuit and Voltage Waveforms

- **5-Ω Switch Connection Between Two Ports**
- **TTL-Compatible Input Levels**
- **Designed to Be Used in Level-Shifting Applications**
- **Package Options Include Plastic Small-Outline (DW), Shrink Small-Outline (DB, DBQ), Thin Very Small-Outline (DGV), and Thin Shrink Small-Outline (PW) Packages, Ceramic Flat (W) Package, Ceramic DIPs (JT), and Ceramic Chip Carriers (FK)**

SN54CBTD3384 . . . JT OR W PACKAGE
SN74CBTD3384 . . . DB, DBQ, DGV, DW, OR PW PACKAGE
(TOP VIEW)

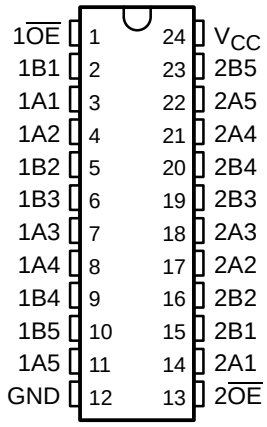

description

The ’CBTD3384 devices provide ten bits of high-speed TTL-compatible bus switching. The low on-state resistance of the switches allows connections to be made without adding propagation delay. A diode to V_{CC} is integrated on the die to allow for level shifting between 5-V inputs and 3.3-V outputs.

These devices are organized as two 5-bit switches with separate output-enable ($\overline{OE}$) inputs. When $\overline{OE}$ is low, the switch is on and port A is connected to port B. When $\overline{OE}$ is high, the switch is open and a high-impedance state exists between the two ports.

The SN54CBTD3384 is characterized for operation over the full military temperature range from –55°C to 125°C. The SN74CBTD3384 is characterized for operation from –40°C to 85°C.

SN54CBTD3384 . . . FK PACKAGE
(TOP VIEW)

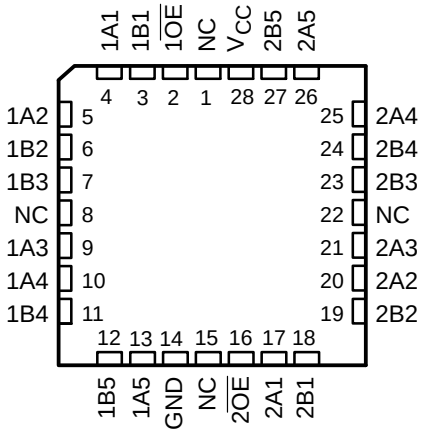

NC – No internal connection

FUNCTION TABLE
(each 5-bit bus switch)

INPUTS		INPUTS/OUTPUTS	
$\overline{1OE}$	$\overline{2OE}$	1B1–1B5	2B1–2B5
L	L	1A1–1A5	2A1–2A5
L	H	1A1–1A5	Z
H	L	Z	2A1–2A5
H	H	Z	Z

PRODUCTION DATA information is current as of publication date. Products conform to specifications per the terms of Texas Instruments standard warranty. Production processing does not necessarily include testing of all parameters.

Copyright © 1998, Texas Instruments Incorporated
On products compliant to MIL-PRF-38535, all parameters are tested unless otherwise noted. On all other products, production processing does not necessarily include testing of all parameters.

logic diagram (positive logic)

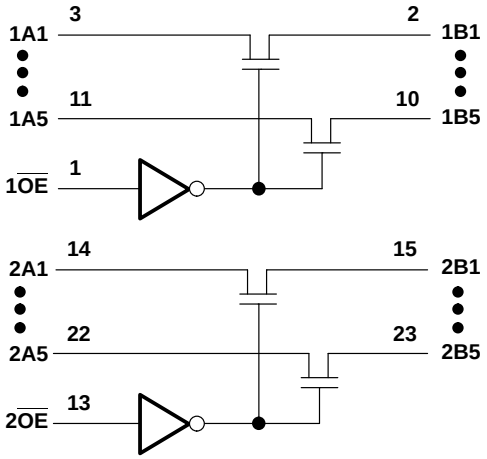

Pin numbers shown are for the DB, DBQ, DGV, DW, JT, PW, and W packages.

absolute maximum ratings over operating free-air temperature range (unless otherwise noted)†

Supply voltage range, V_{CC} . . . . . –0.5 V to 7 V
Input voltage range, V_I (see Note 1) . . . . . –0.5 V to 7 V
Continuous channel current . . . . . 128 mA
Input clamp current, I_{IK} ($V_{I/O} < 0$) . . . . . –50 mA
Package thermal impedance, θ_{JA} (see Note 2): DB package . . . . . 104°C/W
DBQ package . . . . . 113°C/W
DGV package . . . . . 139°C/W
DW package . . . . . 81°C/W
PW package . . . . . 120°C/W
Storage temperature range, T_{stg} . . . . . –65°C to 150°C

† Stresses beyond those listed under “absolute maximum ratings” may cause permanent damage to the device. These are stress ratings only, and functional operation of the device at these or any other conditions beyond those indicated under “recommended operating conditions” is not implied. Exposure to absolute-maximum-rated conditions for extended periods may affect device reliability.

NOTES: 1. The input and output negative-voltage ratings may be exceeded if the input and output clamp-current ratings are observed.
2. The package thermal impedance is calculated in accordance with JESD 51.

recommended operating conditions (see Note 3)

		SN54CBTD3384		SN74CBTD3384		UNIT
		MIN	MAX	MIN	MAX	
V_{CC}	Supply voltage	4.5	5.5	4.5	5.5	V
V_{IH}	High-level control input voltage	2		2		V
V_{IL}	Low-level control input voltage		0.8		0.8	V
T_A	Operating free-air temperature	–55	125	–40	85	°C

NOTE 3: All unused control inputs of the device must be held at V_{CC} or GND to ensure proper device operation. Refer to the TI application report, *Implications of Slow or Floating CMOS Inputs*, literature number SCBA004.

electrical characteristics over recommended operating free-air temperature range (unless otherwise noted)

PARAMETER		TEST CONDITIONS			SN54CBTD3384			SN74CBTD3384			UNIT
					MIN	TYP†	MAX	MIN	TYP†	MAX	
V_{IK}		V_{CC} = 4.5 V,	I_I = –18 mA				–1.2			–1.2	V
V_{OH}		See Figure 2									
I_I		V_{CC} = 5.5 V,	V_I = 5.5 V or GND				±1			±1	µA
I_{CC}		V_{CC} = 5.5 V,	I_O = 0,	V_I = V_{CC} or GND			1.5			1.5	mA
ΔI_{CC}‡	Control inputs	V_{CC} = 5.5 V, One input at 3.4 V, Other inputs at V_{CC} or GND					2.5			2.5	mA
C_i	Control inputs	V_I = 3 V or 0				3			3		pF
$C_{io(OFF)}$		V_O = 3 V or 0,	$\overline{OE}$ = V_{CC}			3.5			3.5		pF
r_{on}§		V_{CC} = 4.5 V	V_I = 0	I_I = 64 mA		5			5	7	Ω
				I_I = 30 mA		5			5	7	
			V_I = 2.4 V,	I_I = 15 mA		35			35	50	

† Typical values are at V_{CC} = 5 V, T_A = 25°C.
‡ This is the increase in supply current for each input that is at the specified TTL voltage level rather than V_{CC} or GND.
§ Measured by the voltage drop between the A and B terminals at the indicated current through the switch. On-state resistance is determined by the lowest voltage of the two (A or B) terminals.

switching characteristics over recommended ranges of supply voltage and operating free-air temperature range, C_L = 50 pF (unless otherwise noted) (see Figure 1)

PARAMETER	FROM (INPUT)	TO (OUTPUT)	SN54CBTD3384		SN74CBTD3384		UNIT
			MIN	MAX	MIN	MAX	
t_{pd}¶	A or B	B or A		0.25		0.25	ns
t_{en}	$\overline{OE}$	A or B	2.2	9.7	2.3	7	ns
t_{dis}	$\overline{OE}$	A or B	1.5	8.6	1.7	5.3	ns

¶ The propagation delay is the calculated RC time constant of the typical on-state resistance of the switch and the specified load capacitance, when driven by an ideal voltage source (zero output impedance).

PARAMETER MEASUREMENT INFORMATION

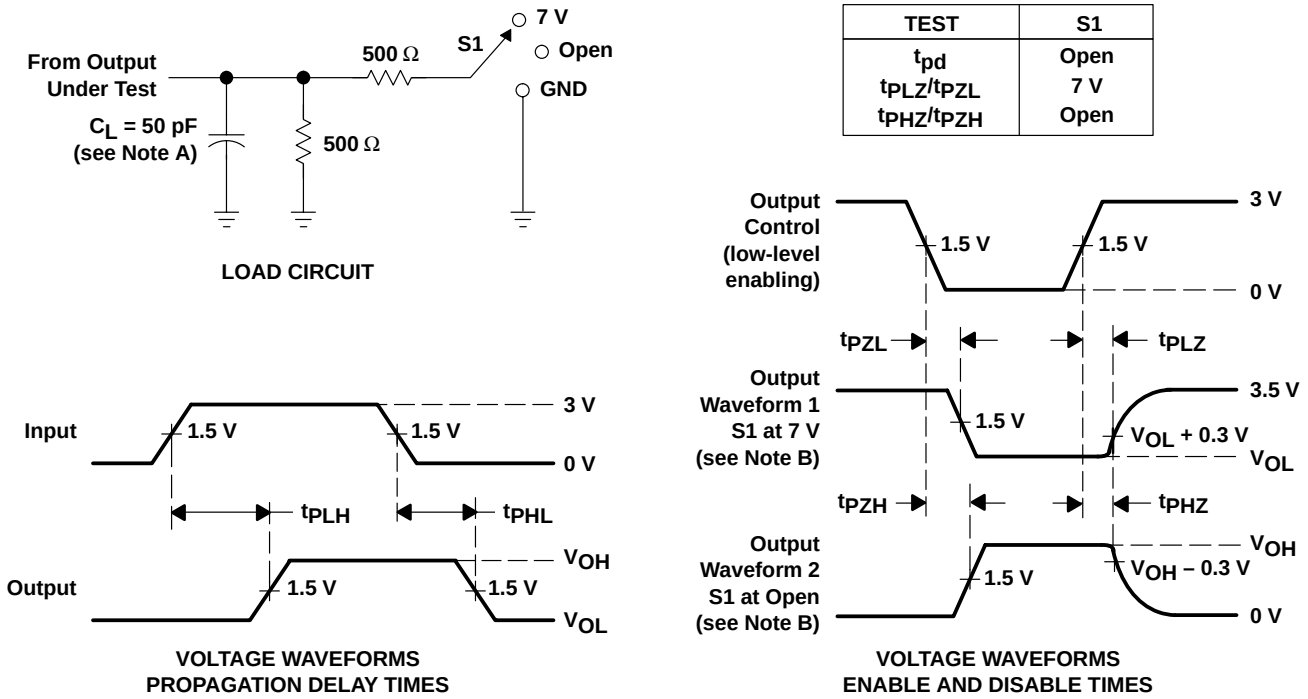

TEST	S1
t_{pd}	Open
t_{PLZ}/t_{PZL}	7 V
t_{PHZ}/t_{PZH}	Open

NOTES:
A. C_L includes probe and jig capacitance.
B. Waveform 1 is for an output with internal conditions such that the output is low except when disabled by the output control. Waveform 2 is for an output with internal conditions such that the output is high except when disabled by the output control.
C. All input pulses are supplied by generators having the following characteristics: PRR ≤ 10 MHz, Z_O = 50 Ω, t_r ≤ 2.5 ns, t_f ≤ 2.5 ns.
D. The outputs are measured one at a time with one transition per measurement.
E. t_{PLZ} and t_{PHZ} are the same as t_{dis}.
F. t_{PZL} and t_{PZH} are the same as t_{en}.
G. t_{PLH} and t_{PHL} are the same as t_{pd}.

Figure 1. Load Circuit and Voltage Waveforms

TYPICAL CHARACTERISTICS

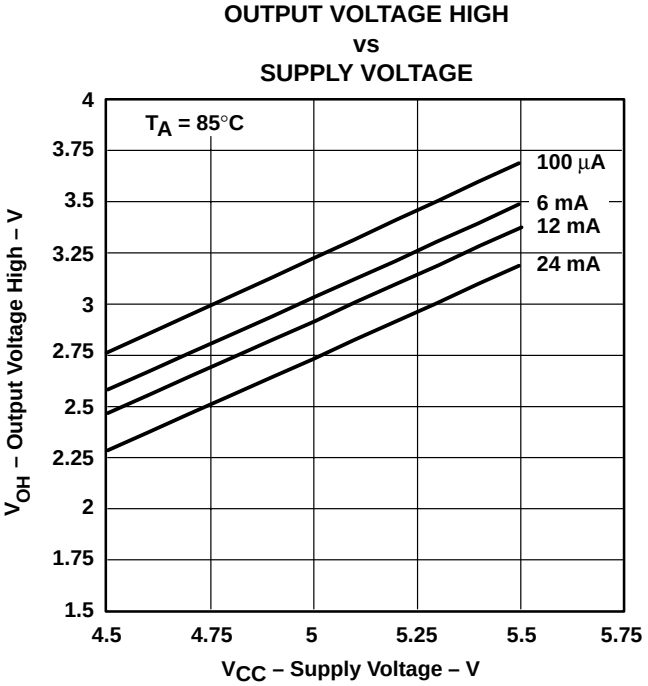

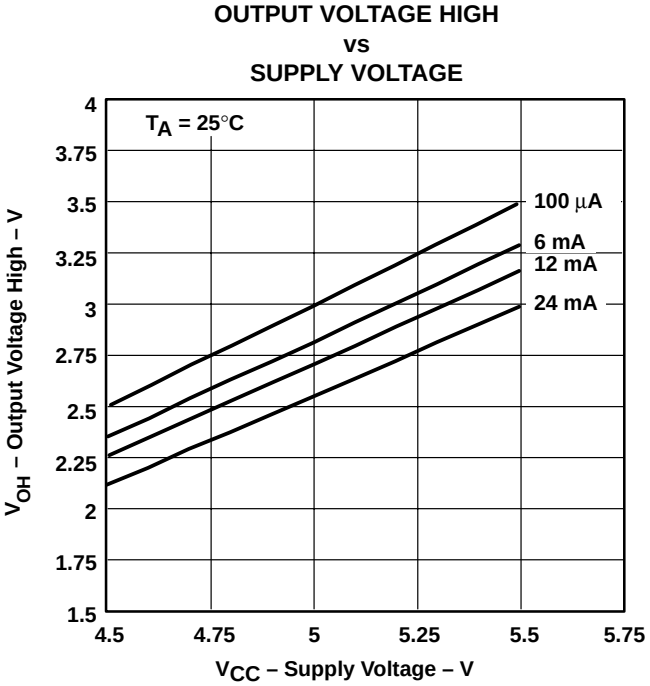

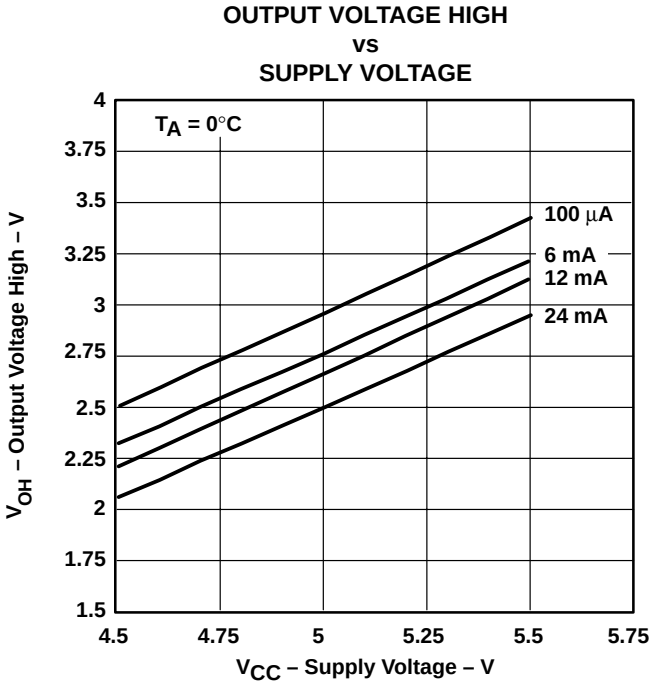

Figure 2. V_{OH} Values

- **Functionally Equivalent to QS3384 and QS3L384**
- **5-Ω Switch Connection Between Two Ports**
- **TTL-Compatible Input Levels**
- **Package Options Include Plastic Small-Outline (DW), Shrink Small-Outline (DB, DBQ), Thin Very Small-Outline (DGV), and Thin Shrink Small-Outline (PW) Packages**

DB, DBQ, DGV, DW, OR PW PACKAGE
(TOP VIEW)

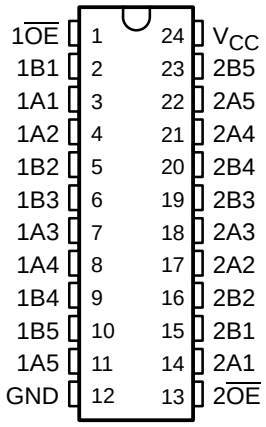

description

The SN74CBTS3384 provides ten bits of high-speed TTL-compatible bus switching with Schottky diodes on the I/Os to clamp undershoot. The low on-state resistance of the switch allows connections to be made with minimal propagation delay.

The device is organized as two 5-bit bus switches with separate output-enable ($\overline{OE}$) inputs. When $\overline{OE}$ is low, the switch is on and port A is connected to port B. When $\overline{OE}$ is high, the switch is open and a high-impedance state exists between the two ports.

The SN74CBTS3384 is characterized for operation from –40°C to 85°C.

FUNCTION TABLE
(each 5-bit bus switch)

INPUTS		INPUTS/OUTPUTS	
$1\overline{OE}$	$2\overline{OE}$	1B1–1B5	2B1–2B5
L	L	1A1–1A5	2A1–2A5
L	H	1A1–1A5	Z
H	L	Z	2A1–2A5
H	H	Z	Z

PRODUCTION DATA information is current as of publication date. Products conform to specifications per the terms of Texas Instruments standard warranty. Production processing does not necessarily include testing of all parameters.

Copyright © 1998, Texas Instruments Incorporated

logic diagram (positive logic)

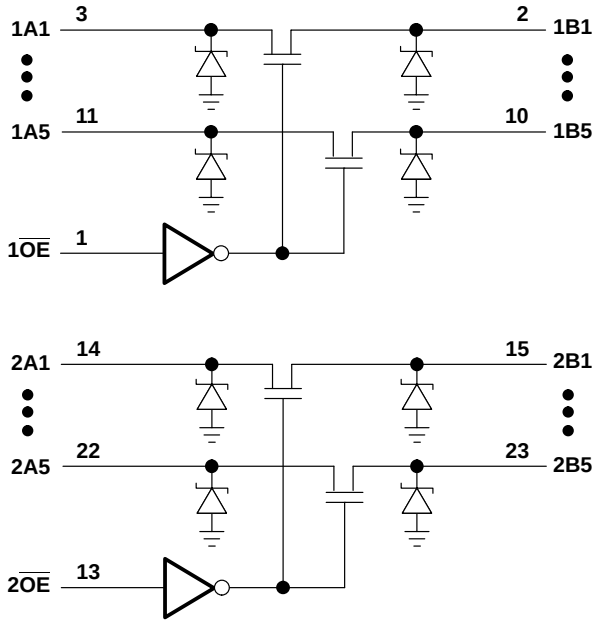

absolute maximum ratings over operating free-air temperature range (unless otherwise noted)†

Supply voltage range, V_{CC}		–0.5 V to 7 V
Input voltage range, V_I (see Note 1)		–0.3 V to 7 V
Continuous channel current		128 mA
Input clamp current, I_{IK} ($V_{I/O} < 0$)		–50 mA
Package thermal impedance, θ_{JA} (see Note 2):	DB package	104°C/W
	DBQ package	113°C/W
	DGV package	139°C/W
	DW package	81°C/W
	PW package	120°C/W
Storage temperature range, T_{stg}		–65°C to 150°C

† Stresses beyond those listed under "absolute maximum ratings" may cause permanent damage to the device. These are stress ratings only, and functional operation of the device at these or any other conditions beyond those indicated under "recommended operating conditions" is not implied. Exposure to absolute-maximum-rated conditions for extended periods may affect device reliability.

NOTES: 1. The input and output negative-voltage ratings may be exceeded if the input and output clamp-current ratings are observed.
2. The package thermal impedance is calculated in accordance with JESD 51.

recommended operating conditions (see Note 3)

		MIN	MAX	UNIT
V_{CC}	Supply voltage	4	5.5	V
V_{IH}	High-level control input voltage	2		V
V_{IL}	Low-level control input voltage		0.8	V
T_A	Operating free-air temperature	–40	85	°C

NOTE 3: All unused control inputs of the device must be held at V_{CC} or GND to ensure proper device operation. Refer to the TI application report, *Implications of Slow or Floating CMOS Inputs*, literature number SCBA004.

electrical characteristics over recommended operating free-air temperature range (unless otherwise noted)

PARAMETER		TEST CONDITIONS			MIN	TYP†	MAX	UNIT
V_{IK}		V_{CC} = 4.5 V,	I_I = –18 mA				–0.6	V
I_I	I_{IL}	V_{CC} = 5.5 V,	V_I = GND				–1	µA
	I_{IH}	V_{CC} = 5.5 V,	V_I = 5.5 V				150	
I_{CC}		V_{CC} = 5.5 V,	I_O = 0,	V_I = V_{CC} or GND			3	µA
ΔI_{CC}‡	Control inputs	V_{CC} = 5.5 V,	One input at 3.4 V,	Other inputs at V_{CC} or GND			2.5	mA
C_i	Control inputs	V_I = 3 V or 0				6		pF
$C_{io(OFF)}$		V_O = 3 V or 0,	$\overline{OE}$ = V_{CC}			6.5		pF
r_{on}§		V_{CC} = 4 V, TYP at V_{CC} = 4 V	V_I = 2.4 V,	I_I = 15 mA		14	20	Ω
		V_{CC} = 4.5 V	V_I = 0	I_I = 64 mA		5	7	
				I_I = 30 mA		5	7	
			V_I = 2.4 V,	I_I = 15 mA		10	15	

† All typical values are at V_{CC} = 5 V (unless otherwise noted), T_A = 25°C.
‡ This is the increase in supply current for each input that is at the specified TTL voltage level rather than V_{CC} or GND.
§ Measured by the voltage drop between the A and B terminals at the indicated current through the switch. On-state resistance is determined by the lowest voltage of the two (A or B) terminals.

switching characteristics over recommended operating free-air temperature range, C_L = 50 pF (unless otherwise noted) (see Figure 1)

PARAMETER	FROM (INPUT)	TO (OUTPUT)	V_{CC} = 4 V		V_{CC} = 5 V ± 0.5 V		UNIT
			MIN	MAX	MIN	MAX	
t_{pd}¶	A or B	B or A		0.35		0.25	ns
t_{en}	$\overline{OE}$	A or B		6.2	1.9	5.7	ns
t_{dis}	$\overline{OE}$	A or B		5.5	2.1	5.2	ns

¶ The propagation delay is the calculated RC time constant of the typical on-state resistance of the switch and the specified load capacitance, when driven by an ideal voltage source (zero output impedance).

PARAMETER MEASUREMENT INFORMATION

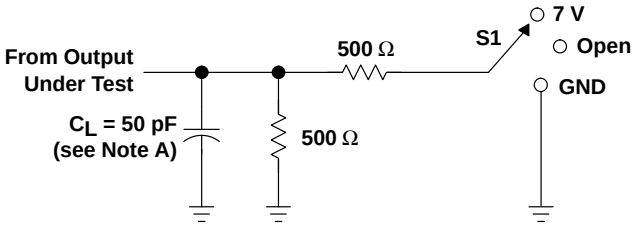

LOAD CIRCUIT

TEST	S1
t_{pd}	Open
t_{PLZ}/t_{PZL}	7 V
t_{PHZ}/t_{PZH}	Open

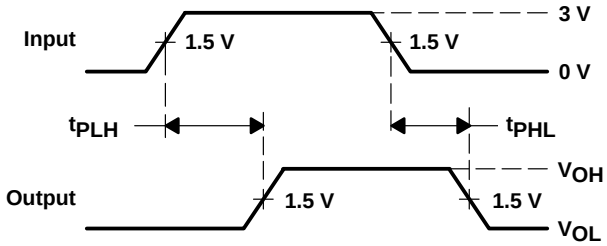

VOLTAGE WAVEFORMS
PROPAGATION DELAY TIMES

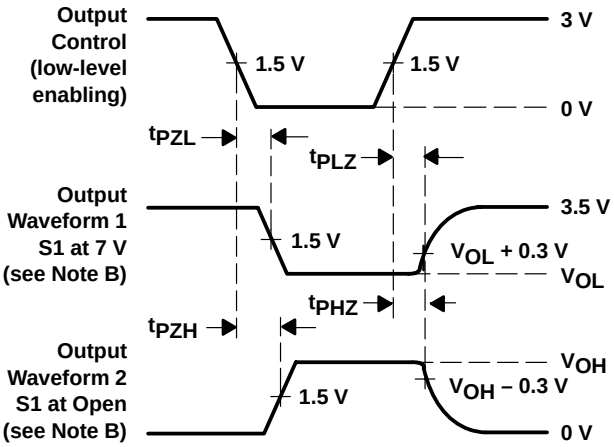

VOLTAGE WAVEFORMS
ENABLE AND DISABLE TIMES

NOTES:
A. C_L includes probe and jig capacitance.
B. Waveform 1 is for an output with internal conditions such that the output is low except when disabled by the output control. Waveform 2 is for an output with internal conditions such that the output is high except when disabled by the output control.
C. All input pulses are supplied by generators having the following characteristics: PRR ≤ 10 MHz, Z_O = 50 Ω, t_r ≤ 2.5 ns, t_f ≤ 2.5 ns.
D. The outputs are measured one at a time with one transition per measurement.
E. t_{PLZ} and t_{PHZ} are the same as t_{dis}.
F. t_{PZL} and t_{PZH} are the same as t_{en}.
G. t_{PLH} and t_{PHL} are the same as t_{pd}.

Figure 1. Load Circuit and Voltage Waveforms

- **5-Ω Switch Connection Between Two Ports**
- **TTL-Compatible Input Levels**
- **Designed to Be Used in Level-Shifting Applications**
- **Package Options Include Plastic Small-Outline (DW), Shrink Small-Outline (DBQ), Thin Very Small-Outline (DGV), and Thin Shrink Small-Outline (PW) Packages**

DBQ, DGV, DW, OR PW PACKAGE
(TOP VIEW)

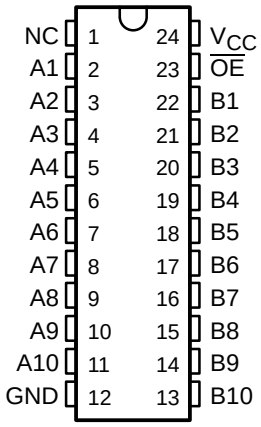

NC – No internal connection

description

The SN74CBTD3861 provides ten bits of high-speed TTL-compatible bus switching. The low on-state resistance of the switch allows connections to be made with minimal propagation delay. A diode to V_{CC} is integrated on the die to allow for level shifting between 5-V inputs and 3.3-V outputs.

The device is organized as one 10-bit switch with a single output-enable ($\overline{OE}$) input. When $\overline{OE}$ is low, the switch is on and port A is connected to port B. When $\overline{OE}$ is high, the switch is open, and a high-impedance state exists between the two ports.

The SN74CBTD3861 is characterized for operation from –40°C to 85°C.

FUNCTION TABLE

INPUT $\overline{OE}$	FUNCTION
L	A port = B port
H	Disconnect

logic diagram (positive logic)

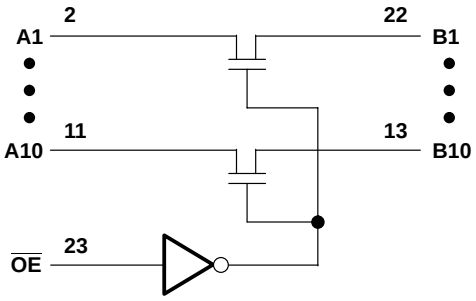

PRODUCT PREVIEW

PRODUCT PREVIEW information concerns products in the formative or design phase of development. Characteristic data and other specifications are design goals. Texas Instruments reserves the right to change or discontinue these products without notice.

Copyright © 1998, Texas Instruments Incorporated

PRODUCT PREVIEW

absolute maximum ratings over operating free-air temperature range (unless otherwise noted)†

Supply voltage range, V_{CC} . . . . . –0.5 V to 7 V
Input voltage range, V_I (see Note 1) . . . . . –0.5 V to 7 V
Continuous channel current . . . . . 128 mA
Input clamp current, I_{IK} ($V_{I/O}$ < 0) . . . . . –50 mA
Package thermal impedance, θ_{JA} (see Note 2): DBQ package . . . . . 113°C/W
DGV package . . . . . 139°C/W
DW package . . . . . 81°C/W
PW package . . . . . 120°C/W
Storage temperature range, T_{stg} . . . . . –65°C to 150°C

† Stresses beyond those listed under "absolute maximum ratings" may cause permanent damage to the device. These are stress ratings only, and functional operation of the device at these or any other conditions beyond those indicated under "recommended operating conditions" is not implied. Exposure to absolute-maximum-rated conditions for extended periods may affect device reliability.

NOTES: 1. The input and output negative-voltage ratings may be exceeded if the input and output clamp-current ratings are observed.
2. The package thermal impedance is calculated in accordance with JESD 51.

recommended operating conditions (see Note 3)

		MIN	MAX	UNIT
V_{CC}	Supply voltage	4.5	5.5	V
V_{IH}	High-level control input voltage	2		V
V_{IL}	Low-level control input voltage		0.8	V
T_A	Operating free-air temperature	–40	85	°C

NOTE 3: All unused control inputs of the device must be held at V_{CC} or GND to ensure proper device operation. Refer to the TI application report, *Implications of Slow or Floating CMOS Inputs*, literature number SCBA004.

electrical characteristics over recommended operating free-air temperature range (unless otherwise noted)

PARAMETER		TEST CONDITIONS			MIN	TYP‡	MAX	UNIT
V_{IK}		V_{CC} = 4.5 V,	I_I = –18 mA				–1.2	V
V_{OH}		See Figure 2						
I_I		V_{CC} = 5.5 V,	V_I = 5.5 V or GND				±1	µA
I_{CC}		V_{CC} = 5.5 V,	I_O = 0,	V_I = V_{CC} or GND			3	µA
ΔI_{CC}§	Control inputs	V_{CC} = 5.5 V,	One input at 3.4 V,	Other inputs at V_{CC} or GND			2.5	mA
C_i	Control inputs	V_I = 3 V or 0						pF
$C_{io(OFF)}$		V_O = 3 V or 0,	$\overline{OE}$ = V_{CC}					pF
r_{on}¶		V_{CC} = 4.5 V	V_I = 0	I_I = 64 mA				Ω
				I_I = 30 mA				
			V_I = 2.4 V,	I_I = 15 mA				

‡ All typical values are at V_{CC} = 5 V, T_A = 25°C.
§ This is the increase in supply current for each input that is at the specified TTL voltage level rather than V_{CC} or GND.
¶ Measured by the voltage drop between the A and B terminals at the indicated current through the switch. On-state resistance is determined by the lowest voltage of the two (A or B) terminals.

switching characteristics over recommended operating free-air temperature range (unless otherwise noted) (see Figure 1)

PARAMETER	FROM (INPUT)	TO (OUTPUT)	MIN	MAX	UNIT
t_{pd}†	A or B	B or A			ns
t_{en}	$\overline{OE}$	A or B			ns
t_{dis}	$\overline{OE}$	A or B			ns

† The propagation delay is the calculated RC time constant of the typical on-state resistance of the switch and the specified load capacitance, when driven by an ideal voltage source (zero output impedance).

PARAMETER MEASUREMENT INFORMATION

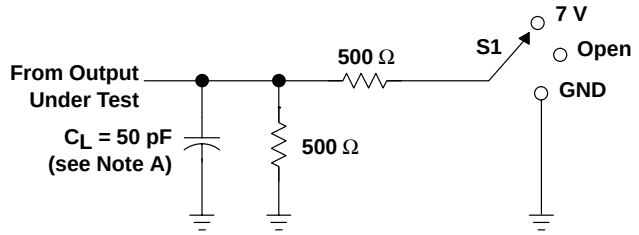

LOAD CIRCUIT

TEST	S1
t_{pd}	Open
t_{PLZ}/t_{PZL}	7 V
t_{PHZ}/t_{PZH}	Open

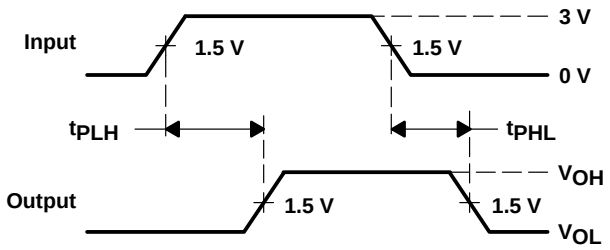

VOLTAGE WAVEFORMS
PROPAGATION DELAY TIMES

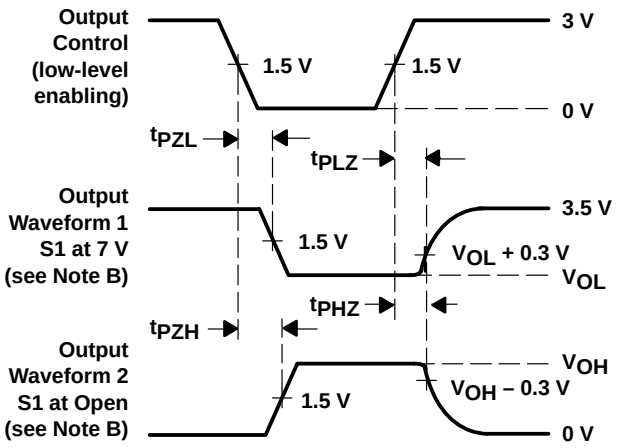

VOLTAGE WAVEFORMS
ENABLE AND DISABLE TIMES

NOTES:
A. C_L includes probe and jig capacitance.
B. Waveform 1 is for an output with internal conditions such that the output is low except when disabled by the output control. Waveform 2 is for an output with internal conditions such that the output is high except when disabled by the output control.
C. All input pulses are supplied by generators having the following characteristics: PRR ≤ 10 MHz, Z_O = 50 Ω, t_r ≤ 2.5 ns, t_f ≤ 2.5 ns.
D. The outputs are measured one at a time with one transition per measurement.
E. t_{PLZ} and t_{PHZ} are the same as t_{dis}.
F. t_{PZL} and t_{PZH} are the same as t_{en}.
G. t_{PLH} and t_{PHL} are the same as t_{pd}.

Figure 1. Load Circuit and Voltage Waveforms

PRODUCT PREVIEW

PRODUCT PREVIEW

TYPICAL CHARACTERISTICS

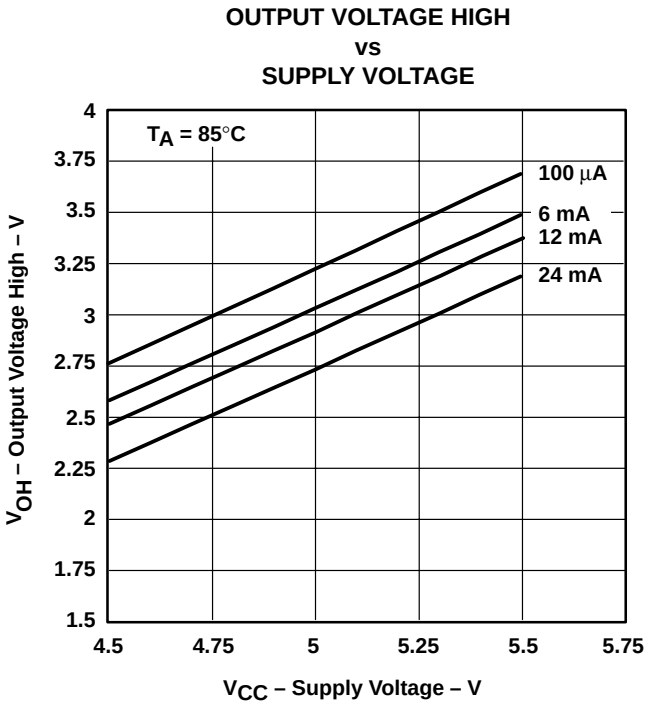

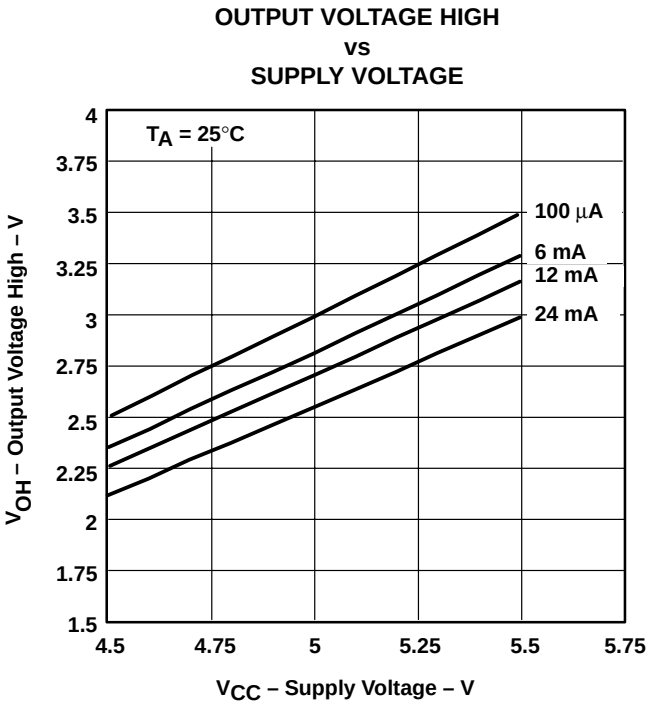

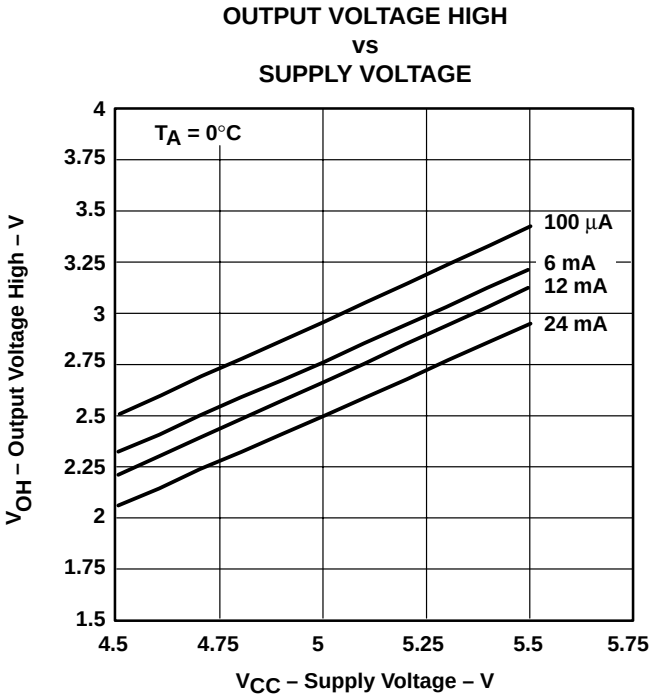

Figure 2. V_{OH} Values

- **5-Ω Switch Connection Between Two Ports**
- **TTL-Compatible Input Levels**
- **Designed to Be Used in Level-Shifting Applications**
- **Package Options Include Plastic 300-mil Shrink Small-Outline (DL), Thin Shrink Small-Outline (DGG), and Thin Very Small-Outline (DGV) Packages**

DGG, DGV, OR DL PACKAGE
(TOP VIEW)

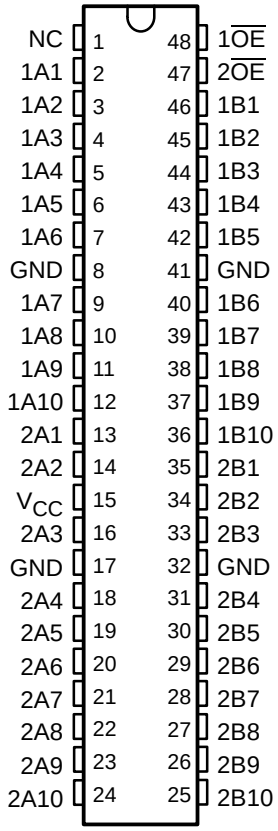

NC – No internal connection

description

The SN74CBTD16210 provides 20 bits of high-speed TTL-compatible bus switching. The low on-state resistance of the switch allows connections to be made with minimal propagation delay. A diode to V_{CC} is integrated in the circuit to allow for level shifting between 5-V inputs and 3.3-V outputs.

The device is organized as a dual 10-bit bus switch with separate output-enable ($\overline{OE}$) inputs. It can be used as two 10-bit bus switches or as one 20-bit bus switch. When $\overline{OE}$ is low, the associated 10-bit bus switch is on and A port is connected to B port. When $\overline{OE}$ is high, the switch is open, and a high-impedance state exists between the ports.

The SN74CBTD16210 is characterized for operation from –40°C to 85°C.

FUNCTION TABLE
(each 10-bit bus switch)

INPUT $\overline{OE}$	FUNCTION
L	A port = B port
H	Z

PRODUCTION DATA information is current as of publication date. Products conform to specifications per the terms of Texas Instruments standard warranty. Production processing does not necessarily include testing of all parameters.

Copyright © 1998, Texas Instruments Incorporated

logic diagram (positive logic)

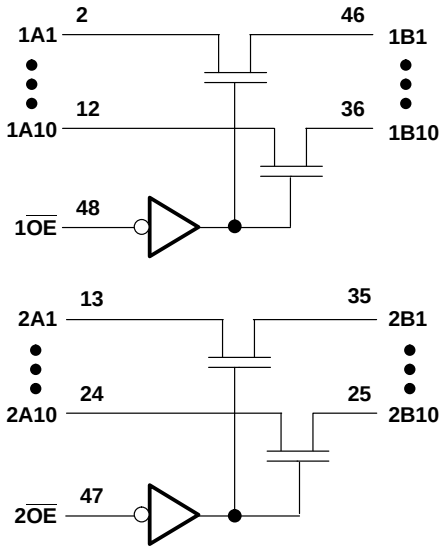

absolute maximum ratings over operating free-air temperature range (unless otherwise noted)†

Supply voltage range, V_{CC}	–0.5 V to 7 V
Input voltage range, V_I (see Note 1)	–0.5 V to 7 V
Continuous channel current	128 mA
Input clamp current, I_{IK} ($V_I < 0$)	–50 mA
Package thermal impedance, θ_{JA} (see Note 2): DGG package	89°C/W
DGV package	93°C/W
DL package	94°C/W
Storage temperature range, T_{stg}	–65°C to 150°C

† Stresses beyond those listed under "absolute maximum ratings" may cause permanent damage to the device. These are stress ratings only, and functional operation of the device at these or any other conditions beyond those indicated under "recommended operating conditions" is not implied. Exposure to absolute-maximum-rated conditions for extended periods may affect device reliability.

NOTES: 1. The input and output negative-voltage ratings may be exceeded if the input and output clamp-current ratings are observed.
2. The package thermal impedance is calculated in accordance with JESD 51.

recommended operating conditions (see Note 3)

		MIN	MAX	UNIT
V_{CC}	Supply voltage	4.5	5.5	V
V_{IH}	High-level control input voltage	2		V
V_{IL}	Low-level control input voltage		0.8	V
T_A	Operating free-air temperature	–40	85	°C

NOTE 3: All unused control inputs of the device must be held at V_{CC} or GND to ensure proper device operation. Refer to the TI application report, *Implications of Slow or Floating CMOS Inputs*, literature number SCBA004.

electrical characteristics over recommended operating free-air temperature range (unless otherwise noted)

PARAMETER		TEST CONDITIONS			MIN	TYP†	MAX	UNIT
V_{IK}		V_{CC} = 4.5 V,	I_I = –18 mA				–1.2	V
V_{OH}		See Figure 2						
I_I		V_{CC} = 0 V,	V_I = 5.5 V				10	µA
		V_{CC} = 5.5 V,	V_I = 5.5 V or GND				±1	
I_{CC}		V_{CC} = 5.5 V,	I_O = 0,	V_I = V_{CC} or GND			1.5	mA
ΔI_{CC}‡	Control inputs	V_{CC} = 5.5 V,	One input at 3.4 V,	Other inputs at V_{CC} or GND			2.5	mA
C_i	Control inputs	V_I = 3 V or 0				4.5		pF
$C_{io(OFF)}$		V_O = 3 V or 0,	$\overline{OE}$ = V_{CC}			5.5		pF
r_{on}§		V_{CC} = 4.5 V	V_I = 0	I_I = 64 mA		5	7	Ω
				I_I = 30 mA		5	7	
			V_I = 2.4 V,	I_I = 15 mA		35	50	

† All typical values are at V_{CC} = 5 V, T_A = 25°C.
‡ This is the increase in supply current for each input that is at the specified TTL voltage level rather than V_{CC} or GND.
§ Measured by the voltage drop between the A and B terminals at the indicated current through the switch. On-state resistance is determined by the lowest voltage of the two (A or B) terminals.

switching characteristics over recommended operating free-air temperature range, C_L = 50 pF (unless otherwise noted) (see Figure 1)

PARAMETER	FROM (INPUT)	TO (OUTPUT)	MIN	MAX	UNIT
t_{pd}¶	A or B	B or A		0.25	ns
t_{en}	$\overline{OE}$	A or B	1.5	9.8	ns
t_{dis}	$\overline{OE}$	A or B	1.5	8.9	ns

¶ The propagation delay is the calculated RC time constant of the typical on-state resistance of the switch and the specified load capacitance, when driven by an ideal voltage source (zero output impedance).

PARAMETER MEASUREMENT INFORMATION

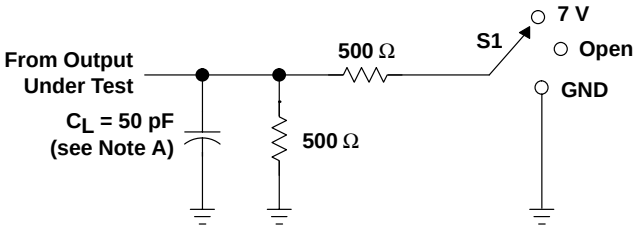

LOAD CIRCUIT

TEST	S1
t_{pd}	Open
t_{PLZ}/t_{PZL}	7 V
t_{PHZ}/t_{PZH}	Open

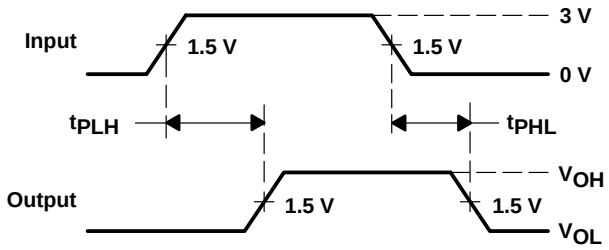

VOLTAGE WAVEFORMS
PROPAGATION DELAY TIMES

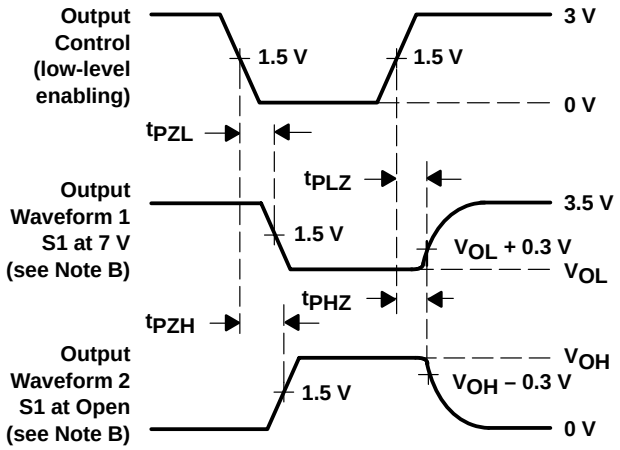

VOLTAGE WAVEFORMS
ENABLE AND DISABLE TIMES

NOTES:
A. C_L includes probe and jig capacitance.
B. Waveform 1 is for an output with internal conditions such that the output is low except when disabled by the output control. Waveform 2 is for an output with internal conditions such that the output is high except when disabled by the output control.
C. All input pulses are supplied by generators having the following characteristics: PRR ≤ 10 MHz, Z_O = 50 Ω, t_r ≤ 2.5 ns, t_f ≤ 2.5 ns.
D. The outputs are measured one at a time with one transition per measurement.
E. t_{PLZ} and t_{PHZ} are the same as t_{dis}.
F. t_{PZL} and t_{PZH} are the same as t_{en}.
G. t_{PLH} and t_{PHL} are the same as t_{pd}.

Figure 1. Load Circuit and Voltage Waveforms

TYPICAL CHARACTERISTICS

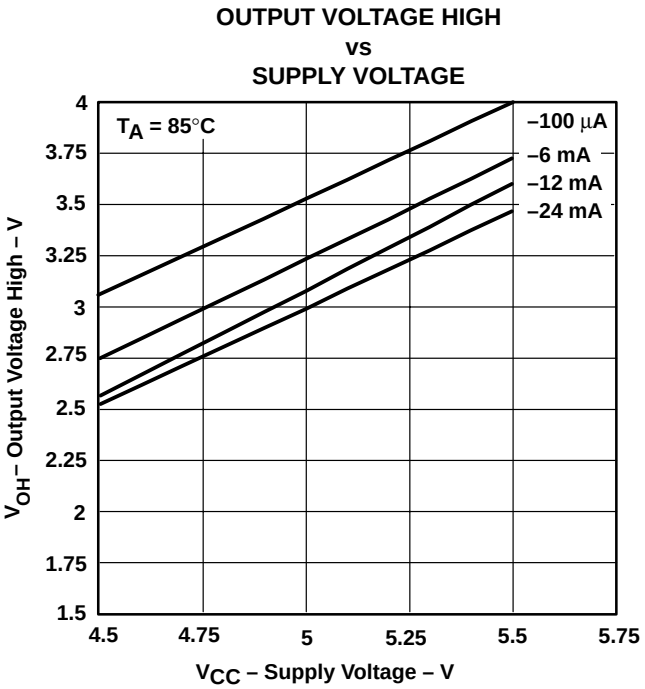

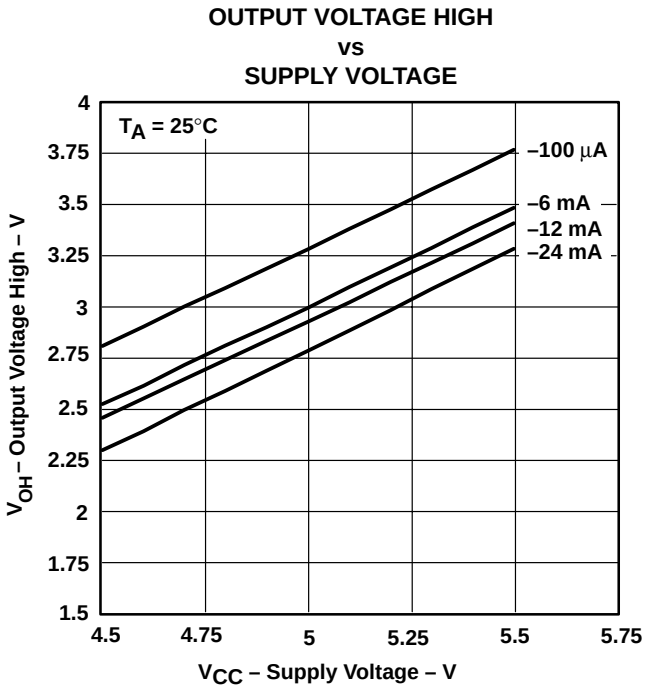

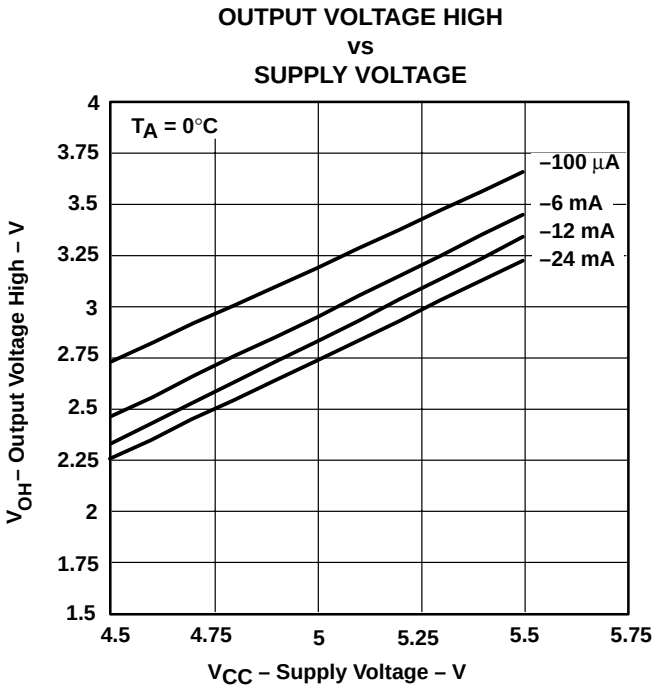

Figure 2. V_{OH} Values

- **5-Ω Switch Connection Between Two Ports**
- **TTL-Compatible Input Levels**
- **Designed to Be Used in Level-Shifting Applications**
- **Package Options Include Plastic 300-mil Shrink Small-Outline (DL), Thin Shrink Small-Outline (DGG), and Thin Very Small-Outline (DGV) Packages**

DGG, DGV, OR DL PACKAGE
(TOP VIEW)

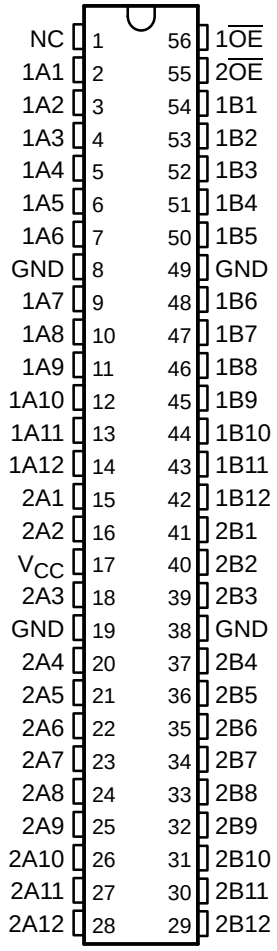

NC – No internal connection

description

The SN74CBTD16211 provides 24 bits of high-speed TTL-compatible bus switching. The low on-state resistance of the switch allows connections to be made with minimal propagation delay. A diode to V_{CC} is integrated in the circuit to allow for level shifting between 5-V inputs and 3.3-V outputs.

The device is organized as a dual 12-bit bus switch with separate output-enable ($\overline{OE}$) inputs. It can be used as two 12-bit bus switches or as one 24-bit bus switch. When $\overline{OE}$ is low, the associated 12-bit bus switch is on and A port is connected to B port. When $\overline{OE}$ is high, the switch is open, and a high-impedance state exists between the ports.

The SN74CBTD16211 is characterized for operation from –40°C to 85°C.

FUNCTION TABLE
(each 12-bit bus switch)

INPUT $\overline{OE}$	FUNCTION
L	A port = B port
H	Disconnect

PRODUCTION DATA information is current as of publication date. Products conform to specifications per the terms of Texas Instruments standard warranty. Production processing does not necessarily include testing of all parameters.

Copyright © 1998, Texas Instruments Incorporated

logic diagram (positive logic)

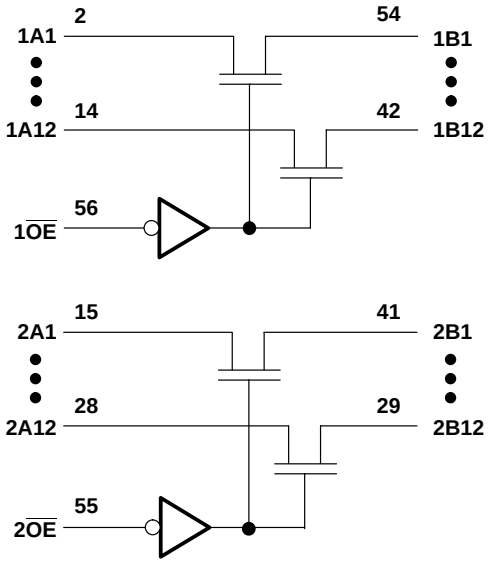

absolute maximum ratings over operating free-air temperature range (unless otherwise noted)†

Supply voltage range, V_{CC}	–0.5 V to 7 V
Input voltage range, V_I (see Note 1)	–0.5 V to 7 V
Continuous channel current	128 mA
Input clamp current, I_{IK} ($V_I < 0$)	–50 mA
Package thermal impedance, θ_{JA} (see Note 2): DGG package	81°C/W
DGV package	86°C/W
DL package	74°C/W
Storage temperature range, T_{stg}	–65°C to 150°C

† Stresses beyond those listed under "absolute maximum ratings" may cause permanent damage to the device. These are stress ratings only, and functional operation of the device at these or any other conditions beyond those indicated under "recommended operating conditions" is not implied. Exposure to absolute-maximum-rated conditions for extended periods may affect device reliability.

NOTES: 1. The input and output negative-voltage ratings may be exceeded if the input and output clamp-current ratings are observed.
2. The package thermal impedance is calculated in accordance with JESD 51.

recommended operating conditions (see Note 3)

		MIN	MAX	UNIT
V_{CC}	Supply voltage	4.5	5.5	V
V_{IH}	High-level control input voltage	2		V
V_{IL}	Low-level control input voltage		0.8	V
T_A	Operating free-air temperature	–40	85	°C

NOTE 3: All unused control inputs of the device must be held at V_{CC} or GND to ensure proper device operation. Refer to the TI application report, *Implications of Slow or Floating CMOS Inputs*, literature number SCBA004.

electrical characteristics over recommended operating free-air temperature range (unless otherwise noted)

PARAMETER		TEST CONDITIONS			MIN	TYP†	MAX	UNIT
V_{IK}		V_{CC} = 4.5 V,	I_I = –18 mA				–1.2	V
V_{OH}		See Figure 2						
I_I		V_{CC} = 5.5 V,	V_I = 5.5 V or GND				±1	µA
I_{CC}		V_{CC} = 5.5 V,	I_O = 0,	V_I = V_{CC} or GND			1.5	mA
ΔI_{CC}‡	Control inputs	V_{CC} = 5.5 V,	One input at 3.4 V,	Other inputs at V_{CC} or GND			2.5	mA
C_i	Control inputs	V_I = 3 V or 0				3		pF
$C_{io(OFF)}$		V_O = 3 V or 0,	$\overline{OE}$ = V_{CC}			5.5		pF
r_{on}§		V_{CC} = 4.5 V	V_I = 0	I_I = 64 mA		5	7	Ω
				I_I = 30 mA		5	7	
			V_I = 2.4 V,	I_I = 15 mA		35	50	

† All typical values are at V_{CC} = 5 V, T_A = 25°C.
‡ This is the increase in supply current for each input that is at the specified TTL voltage level rather than V_{CC} or GND.
§ Measured by the voltage drop between the A and B terminals at the indicated current through the switch. On-state resistance is determined by the lowest voltage of the two (A or B) terminals.

switching characteristics over recommended operating free-air temperature range, C_L = 50 pF (unless otherwise noted) (see Figure 1)

PARAMETER	FROM (INPUT)	TO (OUTPUT)	MIN	MAX	UNIT
t_{pd}¶	A or B	B or A		0.25	ns
t_{en}	$\overline{OE}$	A or B	1.5	9.8	ns
t_{dis}	$\overline{OE}$	A or B	1.5	8.9	ns

¶ The propagation delay is the calculated RC time constant of the typical on-state resistance of the switch and the specified load capacitance, when driven by an ideal voltage source (zero output impedance).

PARAMETER MEASUREMENT INFORMATION

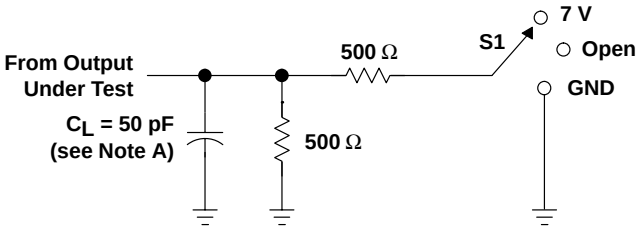

LOAD CIRCUIT

TEST	S1
t_{pd}	Open
t_{PLZ}/t_{PZL}	7 V
t_{PHZ}/t_{PZH}	Open

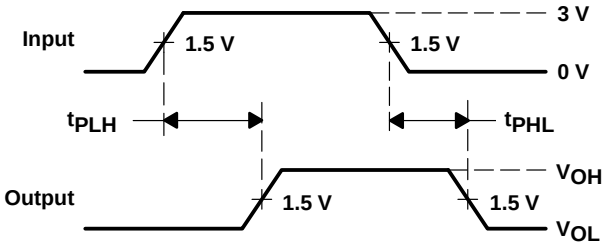

VOLTAGE WAVEFORMS
PROPAGATION DELAY TIMES

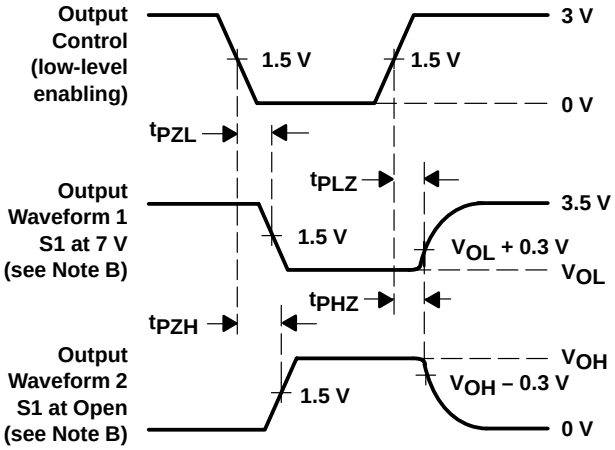

VOLTAGE WAVEFORMS
ENABLE AND DISABLE TIMES

NOTES:
A. C_L includes probe and jig capacitance.
B. Waveform 1 is for an output with internal conditions such that the output is low except when disabled by the output control. Waveform 2 is for an output with internal conditions such that the output is high except when disabled by the output control.
C. All input pulses are supplied by generators having the following characteristics: PRR ≤ 10 MHz, Z_O = 50 Ω, t_r ≤ 2.5 ns, t_f ≤ 2.5 ns.
D. The outputs are measured one at a time with one transition per measurement.
E. t_{PLZ} and t_{PHZ} are the same as t_{dis}.
F. t_{PZL} and t_{PZH} are the same as t_{en}.
G. t_{PLH} and t_{PHL} are the same as t_{pd}.

Figure 1. Load Circuit and Voltage Waveforms

TYPICAL CHARACTERISTICS

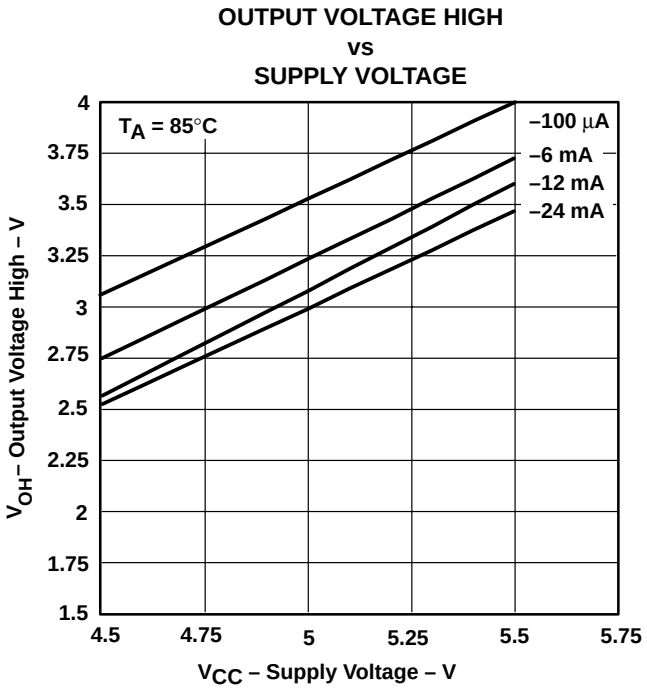

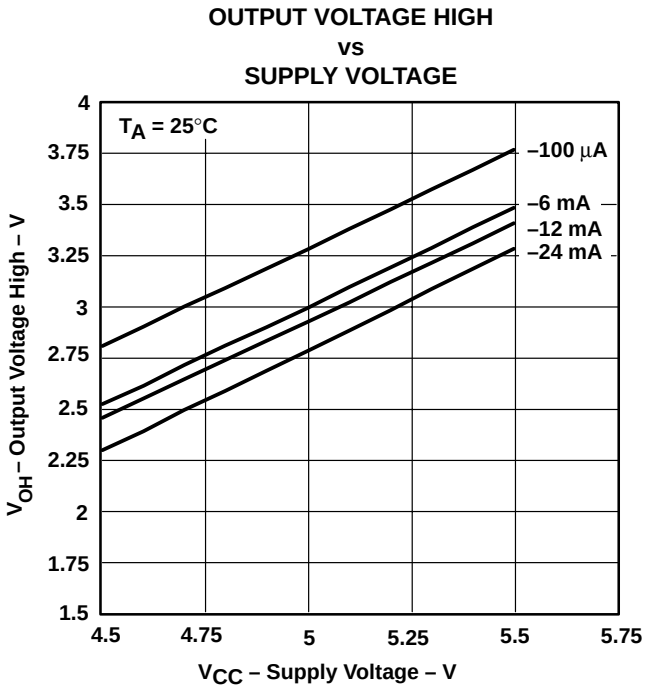

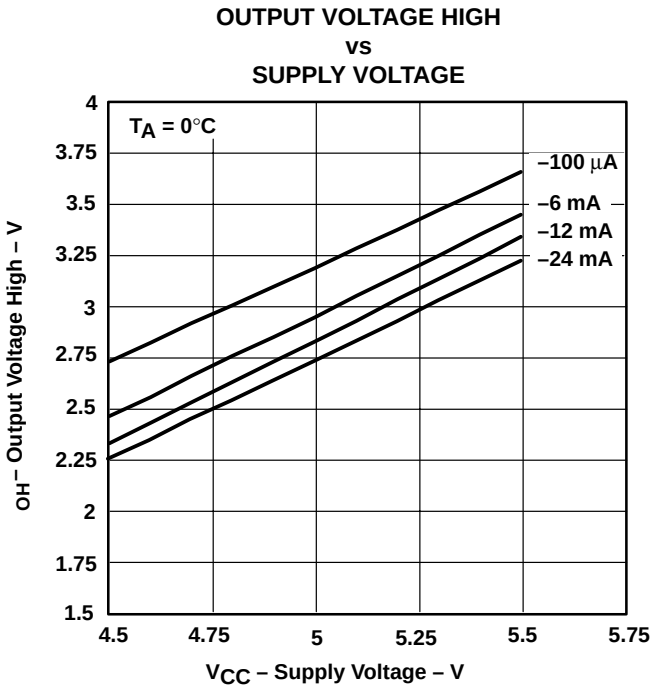

Figure 2. V_{OH} Values

- **5-Ω Switch Connection Between Two Ports**
- **TTL-Compatible Input and Output Levels**
- **Package Options Include Plastic 300-mil Shrink Small-Outline (DL), Thin Shrink Small-Outline (DGG), and Thin Very Small-Outline (DGV) Packages**

description

The SN74CBTS16211 provides 24 bits of high-speed TTL-compatible bus switching with Schottky diodes on the I/Os to clamp undershoot. The low on-state resistance of the switch allows connections to be made with minimal propagation delay.

The device can operate as a dual 12-bit bus switch or a single 24-bit bus switch. When $1\overline{OE}$ is low, 1A is connected to 1B. When $2\overline{OE}$ is low, 2A is connected to 2B.

The SN74CBTS16211 is characterized for operation from –40°C to 85°C.

FUNCTION TABLE
(each 12-bit bus switch)

INPUT $\overline{OE}$	FUNCTION
L	A port = B port
H	Disconnect

DGG, DGV, OR DL PACKAGE
(TOP VIEW)

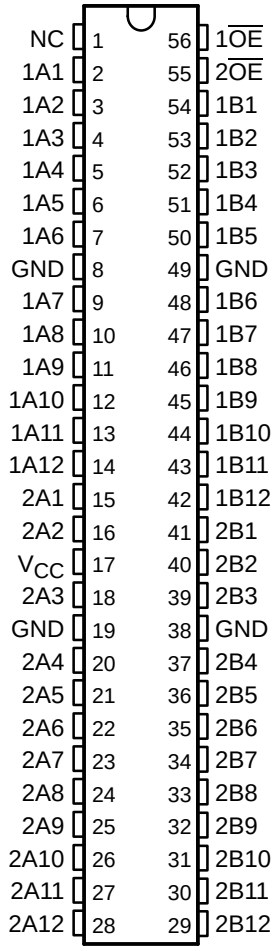

NC – No internal connection

PRODUCTION DATA information is current as of publication date. Products conform to specifications per the terms of Texas Instruments standard warranty. Production processing does not necessarily include testing of all parameters.

Copyright © 1998, Texas Instruments Incorporated

logic diagram (positive logic)

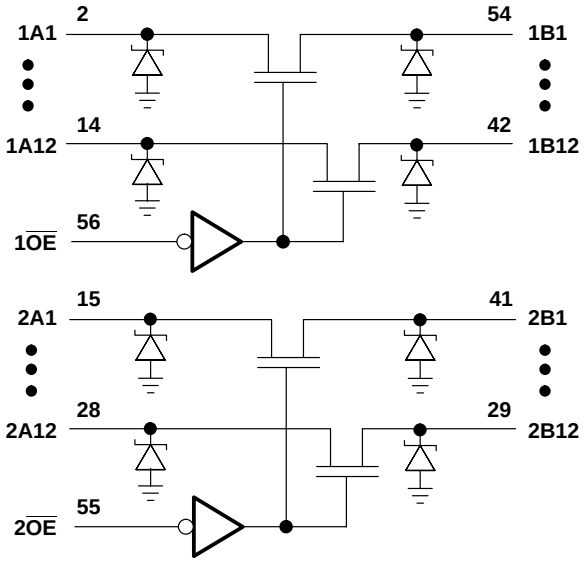

absolute maximum ratings over operating free-air temperature range (unless otherwise noted)†

Supply voltage range, V_{CC}	–0.5 V to 7 V
Input voltage range, V_I (see Note 1)	–0.5 V to 7 V
Continuous channel current	128 mA
Input clamp current, I_{IK} ($V_I < 0$)	–50 mA
Package thermal impedance, θ_{JA} (see Note 2): DGG package	81°C/W
DGV package	86°C/W
DL package	74°C/W
Storage temperature range, T_{stg}	–65°C to 150°C

† Stresses beyond those listed under "absolute maximum ratings" may cause permanent damage to the device. These are stress ratings only, and functional operation of the device at these or any other conditions beyond those indicated under "recommended operating conditions" is not implied. Exposure to absolute-maximum-rated conditions for extended periods may affect device reliability.

NOTES: 1. The input and output negative-voltage ratings may be exceeded if the input and output clamp-current ratings are observed.
2. The package thermal impedance is calculated in accordance with JESD 51.

recommended operating conditions (see Note 3)

		MIN	MAX	UNIT
V_{CC}	Supply voltage	4	5.5	V
V_{IH}	High-level control input voltage	2		V
V_{IL}	Low-level control input voltage		0.8	V
T_A	Operating free-air temperature	–40	85	°C

NOTE 3: All unused control inputs of the device must be held at V_{CC} or GND to ensure proper device operation. Refer to the TI application report, *Implications of Slow or Floating CMOS Inputs*, literature number SCBA004.

electrical characteristics over recommended operating free-air temperature range (unless otherwise noted)

PARAMETER		TEST CONDITIONS			MIN	TYP†	MAX	UNIT
V_{IK}		V_{CC} = 4.5 V,	I_I = –18 mA				–1.2	V
I_I	I_{IL}	V_{CC} = 5.5 V,	V_I = GND				–1	µA
	I_{IH}	V_{CC} = 5.5 V,	V_I = 5.5 V				150	
I_{CC}		V_{CC} = 5.5 V,	I_O = 0,	V_I = V_{CC} or GND			3	µA
ΔI_{CC}‡	Control inputs	V_{CC} = 5.5 V,	One input at 3.4 V,	Other inputs at V_{CC} or GND			2.5	mA
C_i	Control inputs	V_I = 3 V or 0				3		pF
$C_{io(OFF)}$		V_O = 3 V or 0,	$\overline{OE}$ = V_{CC}			5.5		pF
r_{on}§		V_{CC} = 4 V, TYP at V_{CC} = 4 V	V_I = 2.4 V,	I_I = 15 mA		14	20	Ω
		V_{CC} = 4.5 V	V_I = 0	I_I = 64 mA		5	7	
				I_I = 30 mA		5	7	
			V_I = 2.4 V,	I_I = 15 mA		8	12	

† All typical values are at V_{CC} = 5 V (unless otherwise noted), T_A = 25°C.
‡ This is the increase in supply current for each input that is at the specified TTL voltage level rather than V_{CC} or GND.
§ Measured by the voltage drop between the A and B terminals at the indicated current through the switch. On-state resistance is determined by the lowest voltage of the two (A or B) terminals.

switching characteristics over recommended operating free-air temperature range, C_L = 50 pF (unless otherwise noted) (see Figure 1)

PARAMETER	FROM (INPUT)	TO (OUTPUT)	V_{CC} = 4 V		V_{CC} = 5 V ± 0.5 V		UNIT
			MIN	MAX	MIN	MAX	
t_{pd}¶	A or B	B or A		0.35		0.25	ns
t_{en}	$\overline{OE}$	A or B		9.3	3.3	8.6	ns
t_{dis}	$\overline{OE}$	A or B		7.1	2.8	7.9	ns

¶ The propagation delay is the calculated RC time constant of the typical on-state resistance of the switch and the specified load capacitance, when driven by an ideal voltage source (zero output impedance).

PARAMETER MEASUREMENT INFORMATION

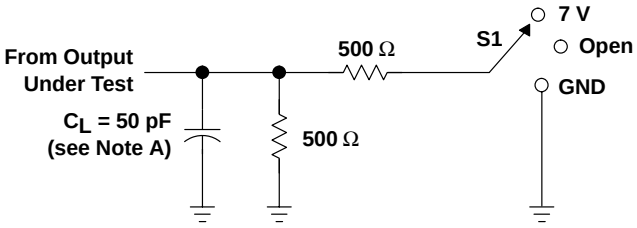

LOAD CIRCUIT

TEST	S1
t_{pd}	Open
t_{PLZ}/t_{PZL}	7 V
t_{PHZ}/t_{PZH}	Open

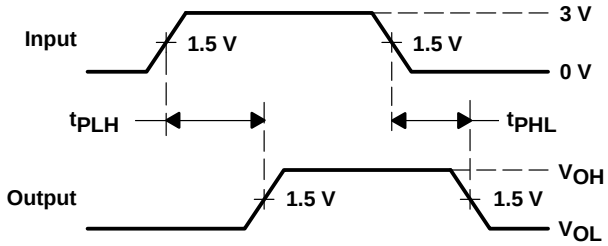

VOLTAGE WAVEFORMS
PROPAGATION DELAY TIMES

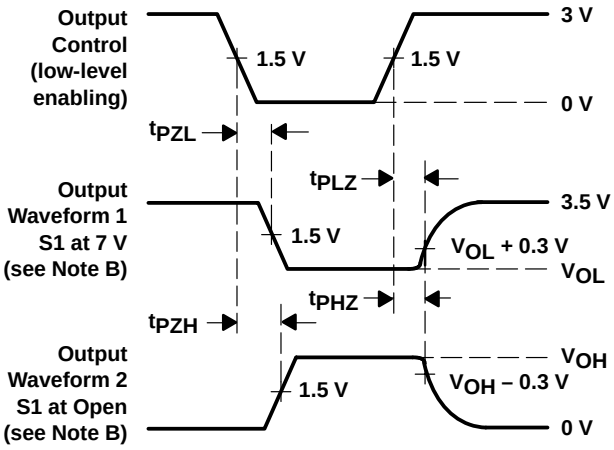

VOLTAGE WAVEFORMS
ENABLE AND DISABLE TIMES

NOTES:
A. C_L includes probe and jig capacitance.
B. Waveform 1 is for an output with internal conditions such that the output is low except when disabled by the output control. Waveform 2 is for an output with internal conditions such that the output is high except when disabled by the output control.
C. All input pulses are supplied by generators having the following characteristics: PRR ≤ 10 MHz, Z_O = 50 Ω, t_r ≤ 2.5 ns, t_f ≤ 2.5 ns.
D. The outputs are measured one at a time with one transition per measurement.
E. t_{PLZ} and t_{PHZ} are the same as t_{dis}.
F. t_{PZL} and t_{PZH} are the same as t_{en}.
G. t_{PLH} and t_{PHL} are the same as t_{pd}.

Figure 1. Load Circuit and Voltage Waveforms

- **5-Ω Switch Connection Between Two Ports**
- **TTL-Compatible Input Levels**
- **Latch-Up Performance Exceeds 250 mA Per JESD 17**
- **ESD Protection Exceeds 2000 V Per MIL-STD-833, Method 3015; Exceeds 200 V Using Machine Model (C = 200 pF, R = 0)**
- **Package Options Include Plastic Thin Shrink Small-Outline (DGG), Thin Very Small-Outline (DGV), and 300-mil Shrink Small-Outline (DL) Packages**

DGG, DGV, OR DL PACKAGE
(TOP VIEW)

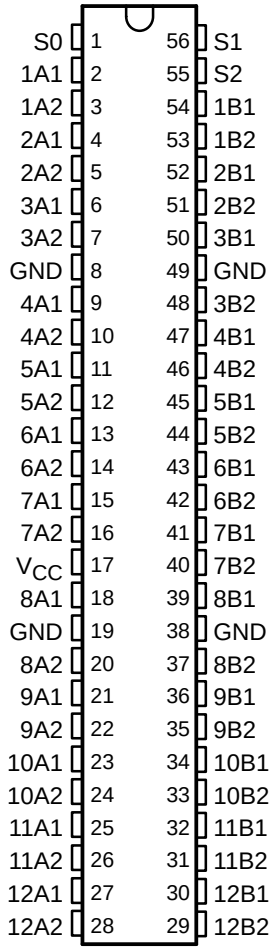

description

The SN74CBTS16212 provides 24 bits of high-speed TTL-compatible bus switching or exchanging with Schottky diodes on the I/Os to clamp undershoot. The low on-state resistance of the switch allows connections to be made with minimal propagation delay.

The device operates as a 24-bit bus switch or a 12-bit bus exchanger, which provides data exchanging between the four signal ports via the data-select (S0–S2) terminals.

The SN74CBTS16212 is characterized for operation from –40°C to 85°C.

FUNCTION TABLE

INPUTS			INPUTS/OUTPUTS		FUNCTION
S2	S1	S0	A1	A2	
L	L	L	Z	Z	Disconnect
L	L	H	B1	Z	A1 port = B1 port
L	H	L	B2	Z	A1 port = B2 port
L	H	H	Z	B1	A2 port = B1 port
H	L	L	Z	B2	A2 port = B2 port
H	L	H	Z	Z	Disconnect
H	H	L	B1	B2	A1 port = B1 port A2 port = B2 port
H	H	H	B2	B1	A1 port = B2 port A2 port = B1 port

PRODUCTION DATA information is current as of publication date. Products conform to specifications per the terms of Texas Instruments standard warranty. Production processing does not necessarily include testing of all parameters.

Copyright © 1998, Texas Instruments Incorporated

logic diagram (positive logic)

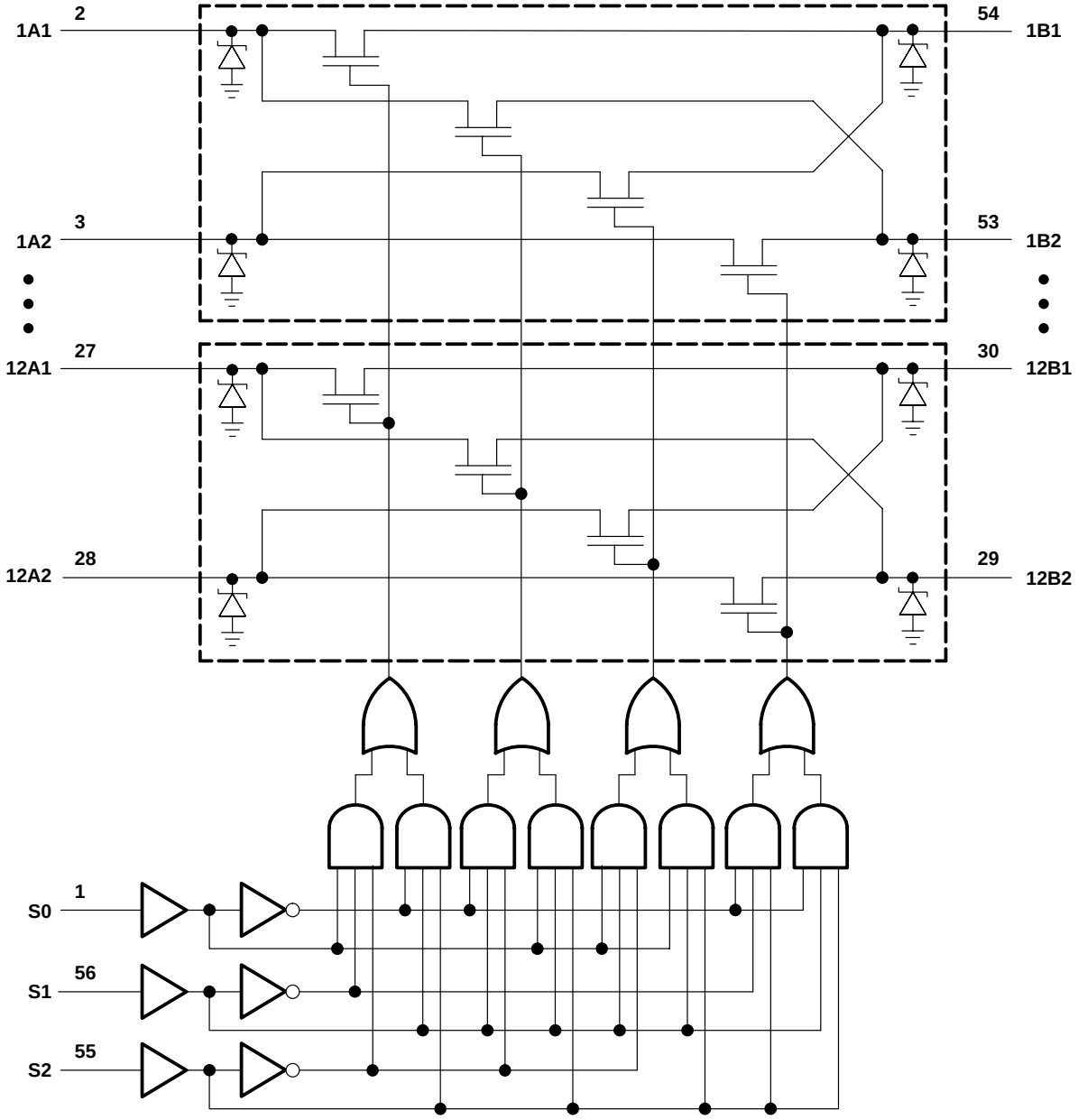

absolute maximum ratings over operating free-air temperature range (unless otherwise noted)†

Supply voltage range, V_{CC} . . . . . –0.5 V to 7 V
Input voltage range, V_I (see Note 1) . . . . . –0.5 V to 7 V
Continuous channel current . . . . . 128 mA
Input clamp current, I_{IK} (V_I < 0) . . . . . –50 mA
Package thermal impedance, θ_{JA} (see Note 2): DGG package . . . . . 81°C/W
DGV package . . . . . 86°C/W
DL package . . . . . 74°C/W
Storage temperature range, T_{stg} . . . . . –65°C to 150°C

† Stresses beyond those listed under "absolute maximum ratings" may cause permanent damage to the device. These are stress ratings only, and functional operation of the device at these or any other conditions beyond those indicated under "recommended operating conditions" is not implied. Exposure to absolute-maximum-rated conditions for extended periods may affect device reliability.

NOTES: 1. The input and output negative-voltage ratings may be exceeded if the input and output clamp-current ratings are observed.
2. The package thermal impedance is calculated in accordance with JESD 51.

recommended operating conditions (see Note 3)

		MIN	MAX	UNIT
V_{CC}	Supply voltage	4	5.5	V
V_{IH}	High-level control input voltage	2		V
V_{IL}	Low-level control input voltage		0.8	V
T_A	Operating free-air temperature	–40	85	°C

NOTE 3: All unused control inputs of the device must be held at V_{CC} or GND to ensure proper device operation. Refer to the TI application report, *Implications of Slow or Floating CMOS Inputs*, literature number SCBA004.

electrical characteristics over recommended operating free-air temperature range (unless otherwise noted)

PARAMETER		TEST CONDITIONS			MIN	TYP†	MAX	UNIT
V_{IK}		V_{CC} = 4.5 V,	I_I = –18 mA				–1.2	V
I_I	I_{IL}	V_{CC} = 5.5 V,	V_I = GND				–1	µA
	I_{IH}	V_{CC} = 5.5 V,	V_I = 5.5 V				150	
I_{CC}		V_{CC} = 5.5 V,	I_O = 0,	V_I = V_{CC} or GND			3	µA
ΔI_{CC}§	Control inputs	V_{CC} = 5.5 V,	One input at 3.4 V,	Other inputs at V_{CC} or GND			2.5	mA
C_i	Control inputs	V_I = 3 V or 0				2.5		pF
$C_{io(OFF)}$		V_O = 3 V or 0,	S0, S1, or S2 = V_{CC}			10.5		pF
r_{on}¶		V_{CC} = 4 V,	V_I = 2.4 V,	I_I = 15 mA			20	Ω
		V_{CC} = 4.5 V	V_I = 0	I_I = 64 mA		4	7	
				I_I = 30 mA		4	7	
			V_I = 2.4 V,	I_I = 15 mA		6	12	

‡ All typical values are at V_{CC} = 5 V, T_A = 25°C.
§ This is the increase in supply current for each input that is at the specified TTL voltage level rather than V_{CC} or GND.
¶ Measured by the voltage drop between the A and B terminals at the indicated current through the switch. On-state resistance is determined by the lower of the voltages of the two (A or B) terminals.

switching characteristics over recommended operating free-air temperature range, C_L = 50 pF (unless otherwise noted) (see Figure 1)

PARAMETER	FROM (INPUT)	TO (OUTPUT)	V_{CC} = 4 V		V_{CC} = 5 V ± 0.5 V		UNIT
			MIN	MAX	MIN	MAX	
t_{pd}†	A or B	B or A		0.35		0.25	ns
t_{pd}	S	A or B		10	1.5	9.1	ns
t_{en}	S	A or B		10.4	1.5	9.7	ns
t_{dis}	S	A or B		9.2	1.5	8.8	ns

† The propagation delay is the calculated RC time constant of the typical on-state resistance of the switch and the specified load capacitance, when driven by an ideal voltage source (zero output impedance).

PARAMETER MEASUREMENT INFORMATION

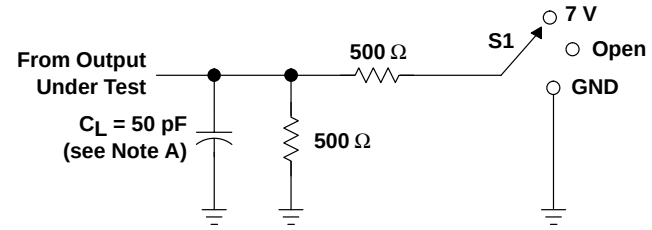

LOAD CIRCUIT

TEST	S1
t_{pd}	Open
t_{PLZ}/t_{PZL}	7 V
t_{PHZ}/t_{PZH}	Open

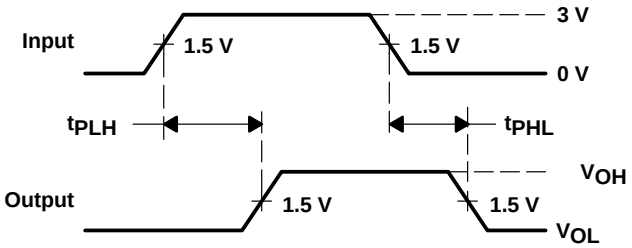

VOLTAGE WAVEFORMS
PROPAGATION DELAY TIMES

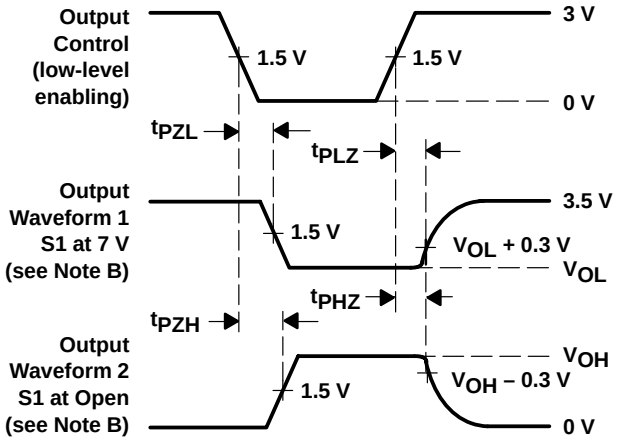

VOLTAGE WAVEFORMS
ENABLE AND DISABLE TIMES

NOTES:
A. C_L includes probe and jig capacitance.
B. Waveform 1 is for an output with internal conditions such that the output is low except when disabled by the output control. Waveform 2 is for an output with internal conditions such that the output is high except when disabled by the output control.
C. All input pulses are supplied by generators having the following characteristics: PRR ≤ 10 MHz, Z_O = 50 Ω, t_r ≤ 2.5 ns, t_f ≤ 2.5 ns.
D. The outputs are measured one at a time with one transition per measurement.
E. t_{PLZ} and t_{PHZ} are the same as t_{dis}.
F. t_{PZL} and t_{PZH} are the same as t_{en}.
G. t_{PLH} and t_{PHL} are the same as t_{pd}.

Figure 1. Load Circuit and Voltage Waveforms

- **5-Ω Switch Connection Between Two Ports**
- **TTL-Compatible Input Levels**
- **Package Options Include Plastic Thin Shrink Small-Outline (DGG) and 300-mil Shrink Small-Outline (DL) Packages**

DGG OR DL PACKAGE
(TOP VIEW)

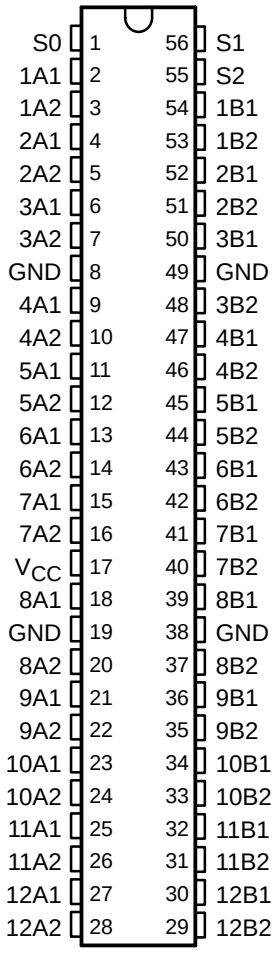

description

The SN74CBTS16213 provides 24 bits of high-speed TTL-compatible bus switching or exchanging with Schottky diodes on the I/Os to clamp undershoot. The low on-state resistance of the switch allows connections to be made with minimal propagation delay.

The device operates as a 24-bit bus switch or a 12-bit bus exchanger that provides data exchanging between the four signal ports via the data-select (S0–S2) terminals.

The SN74CBTS16213 is characterized for operation from –40°C to 85°C.

FUNCTION TABLE

INPUTS			INPUTS/OUTPUTS		FUNCTION
S2	S1	S0	A1	A2	
L	L	L	Z	Z	Disconnect
L	L	H	B1 port	Z	A1 port = B1 port
L	H	L	B2 port	Z	A1 port = B2 port
L	H	H	Z	B1 port	A2 port = B1 port
H	L	L	Z	B2 port	A2 port = B2 port
H	L	H	Z	Z	Disconnect
H	H	L	B1 port	B2 port	A1 port = B1 port A2 port = B2 port
H	H	H	B2 port	B1 port	A1 port = B2 port A2 port = B1 port

PRODUCT PREVIEW information concerns products in the formative or design phase of development. Characteristic data and other specifications are design goals. Texas Instruments reserves the right to change or discontinue these products without notice.

Copyright © 1998, Texas Instruments Incorporated

logic diagram (positive logic)

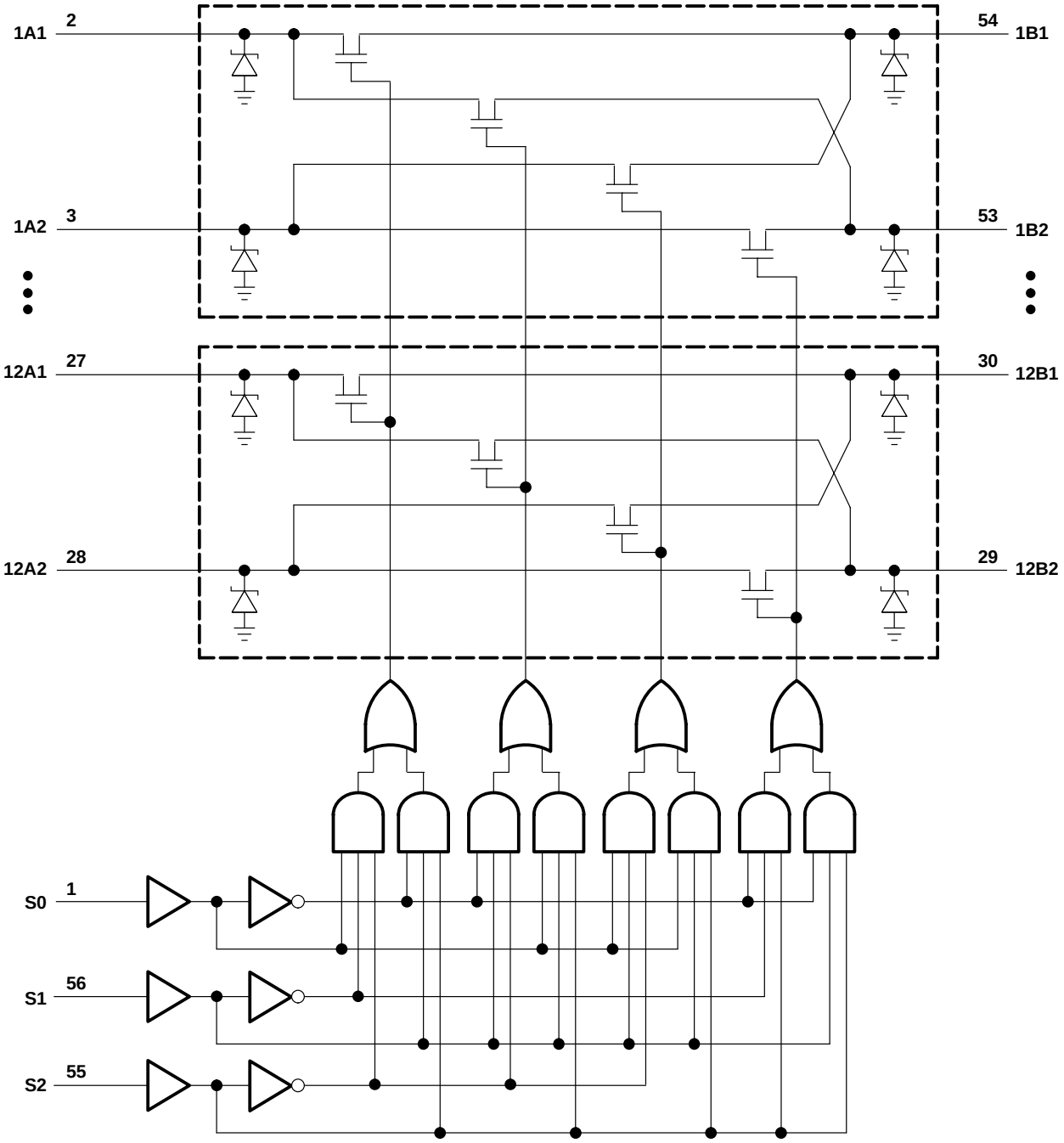

absolute maximum ratings over operating free-air temperature range (unless otherwise noted)†

Supply voltage range, V_{CC} . . . . . –0.5 V to 7 V
Input voltage range, V_I (see Note 1) . . . . . –0.5 V to 7 V
Continuous channel current . . . . . 128 mA
Input clamp current, I_{IK} (V_I < 0) . . . . . –50 mA
Package thermal impedance, θ_{JA} (see Note 2): DGG package . . . . . 81°C/W
DL package . . . . . 74°C/W
Storage temperature range, T_{stg} . . . . . –65°C to 150°C

† Stresses beyond those listed under "absolute maximum ratings" may cause permanent damage to the device. These are stress ratings only, and functional operation of the device at these or any other conditions beyond those indicated under "recommended operating conditions" is not implied. Exposure to absolute-maximum-rated conditions for extended periods may affect device reliability.

NOTES: 1. The input and output negative-voltage ratings may be exceeded if the input and output clamp-current ratings are observed.
2. The package thermal impedance is calculated in accordance with JESD 51.

recommended operating conditions (see Note 3)

		MIN	MAX	UNIT
V_{CC}	Supply voltage	4	5.5	V
V_{IH}	High-level control input voltage	2		V
V_{IL}	Low-level control input voltage		0.8	V
T_A	Operating free-air temperature	–40	85	°C

NOTE 3: All unused control inputs of the device must be held at V_{CC} or GND to ensure proper device operation. Refer to the TI application report, *Implications of Slow or Floating CMOS Inputs*, literature number SCBA004.

electrical characteristics over recommended operating free-air temperature range (unless otherwise noted)

PARAMETER		TEST CONDITIONS			MIN	TYP‡	MAX	UNIT
V_{IK}		V_{CC} = 4.5 V,	I_I = –18 mA				–1.2	V
I_I	I_{IL}	V_{CC} = 5.5 V,	V_I = GND				–1	µA
	I_{IH}	V_{CC} = 5.5 V,	V_I = 5.5 V				50	
I_{CC}		V_{CC} = 5.5 V,	I_O = 0,	V_I = V_{CC} or GND			3	µA
ΔI_{CC}§	Control inputs	V_{CC} = 5.5 V,	One input at 3.4 V,	Other inputs at V_{CC} or GND			2.5	mA
C_i	Control inputs	V_I = 3 V or 0				4.5		pF
$C_{io(OFF)}$	B port	V_O = 3 V or 0,	S0, S1, or S2 = V_{CC}			8.5		pF
	A port					8		
r_{on}¶	A to B or B to A	V_{CC} = 4 V, TYP at V_{CC} = 4 V	V_I = 2.4 V,	I_I = 15 mA		14	20	Ω
		V_{CC} = 4.5 V	V_I = 0	I_I = 64 mA		5	7	
				I_I = 30 mA		5	7	
			V_I = 2.4 V,	I_I = 15 mA		8	15	
	A1 to A2	V_{CC} = 4 V, TYP at V_{CC} = 4 V	V_I = 2.4 V,	I_I = 15 mA		22	30	
		V_{CC} = 4.5 V	V_I = 0	I_I = 64 mA		10	14	
				I_I = 30 mA		10	14	
			V_I = 2.4 V,	I_I = 15 mA		16	22	

‡ All typical values are at V_{CC} = 5 V (unless otherwise noted), T_A = 25°C.
§ This is the increase in supply current for each input that is at the specified TTL voltage level rather than V_{CC} or GND.
¶ Measured by the voltage drop between the A and B terminals at the indicated current through the switch. On-state resistance is determined by the lower of the voltages of the two (A or B) terminals.

switching characteristics over recommended operating free-air temperature range, C_L = 50 pF (unless otherwise noted) (see Figure 1)

PARAMETER	FROM (INPUT)	TO (OUTPUT)	V_{CC} = 4 V		V_{CC} = 5 V ± 0.5 V		UNIT
			MIN	MAX	MIN	MAX	
t_{pd}†	A or B	B or A		0.35		0.25	ns
	A1	A2		0.5		0.5	
t_{en}	S	A or B		12.4	3.2	11.1	ns
t_{dis}	S	A or B		12.4	2.3	11.9	ns
t_{en}	S0	A2 and B2		11.5	4	10.9	ns
t_{dis}	S0	A2 and B2		12.8	5.7	12	ns

† The propagation delay is the calculated RC time constant of the typical on-state resistance of the switch and the specified load capacitance, when driven by an ideal voltage source (zero output impedance).

PARAMETER MEASUREMENT INFORMATION

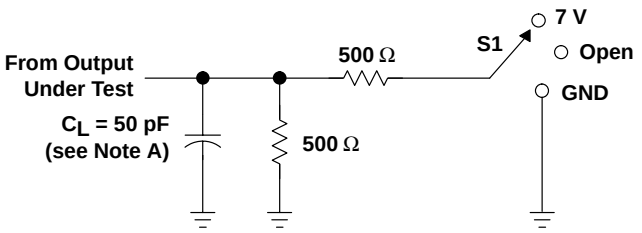

LOAD CIRCUIT

TEST	S1
t_{pd}	Open
t_{PLZ}/t_{PZL}	7 V
t_{PHZ}/t_{PZH}	Open

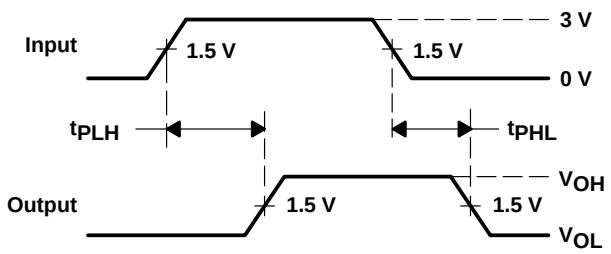

VOLTAGE WAVEFORMS
PROPAGATION DELAY TIMES

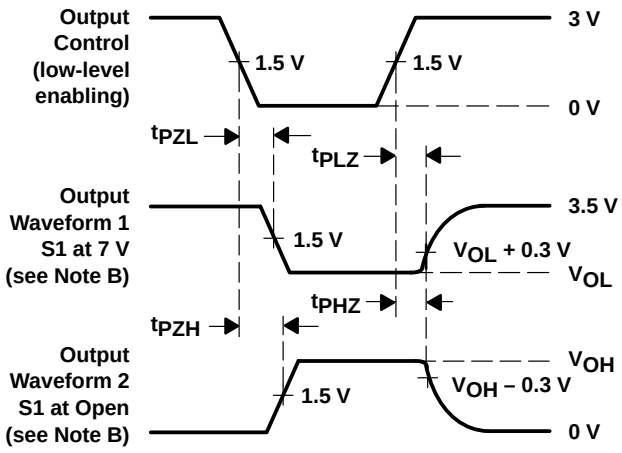

VOLTAGE WAVEFORMS
ENABLE AND DISABLE TIMES

NOTES:
A. C_L includes probe and jig capacitance.
B. Waveform 1 is for an output with internal conditions such that the output is low except when disabled by the output control. Waveform 2 is for an output with internal conditions such that the output is high except when disabled by the output control.
C. All input pulses are supplied by generators having the following characteristics: PRR ≤ 10 MHz, Z_O = 50 Ω, t_r ≤ 2.5 ns, t_f ≤ 2.5 ns.
D. The outputs are measured one at a time with one transition per measurement.
E. t_{PLZ} and t_{PHZ} are the same as t_{dis}.
F. t_{PZL} and t_{PZH} are the same as t_{en}.
G. t_{PLH} and t_{PHL} are the same as t_{pd}.

Figure 1. Load Circuit and Voltage Waveforms

- **5-Ω Switch Connection Between Two Ports**
- **TTL-Compatible Input Levels**
- **Package Options Include Plastic Thin Shrink Small-Outline (DGG) and Shrink Small-Outline (DL) Packages**

DGG OR DL PACKAGE
(TOP VIEW)

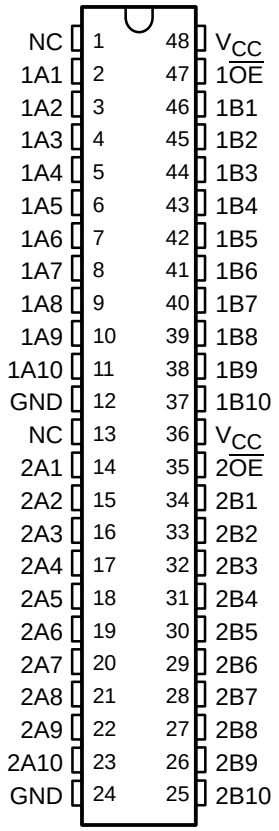

NC – No internal connection

description

The SN74CBTD16861 provides 20 bits of high-speed TTL-compatible bus switching. The low on-state resistance of the switch allows connections to be made with minimal propagation delay. A diode to V_{CC} is integrated on the die to allow for level shifting between 5-V inputs and 3.3-V outputs.

The device is organized as one dual 10-bit switch with separate output-enable ($\overline{OE}$) input. When $\overline{OE}$ is low, the switch is on and port A is connected to port B. When $\overline{OE}$ is high, the switch is open, and a high-impedance state exists between the two ports.

The SN74CBTD16861 is characterized for operation from –40°C to 85°C.

FUNCTION TABLE
(each 10-bit bus switch)

INPUT $\overline{OE}$	FUNCTION
L	A port = B port
H	Disconnect

PRODUCT PREVIEW

PRODUCT PREVIEW information concerns products in the formative or design phase of development. Characteristic data and other specifications are design goals. Texas Instruments reserves the right to change or discontinue these products without notice.

Copyright © 1998, Texas Instruments Incorporated

PRODUCT PREVIEW

logic diagram (positive logic)

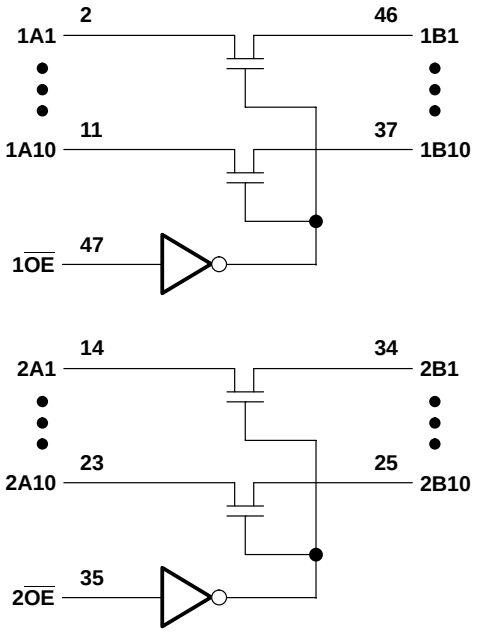

absolute maximum ratings over operating free-air temperature range (unless otherwise noted)†

Supply voltage range, V_{CC} . . . . . –0.5 V to 7 V
Input voltage range, V_I (see Note 1) . . . . . –0.5 V to 7 V
Continuous channel current . . . . . 128 mA
Input clamp current, I_{IK} ($V_{I/O} < 0$) . . . . . –50 mA
Package thermal impedance, θ_{JA} (see Note 2): DGG package . . . . . 89°C/W
DL package . . . . . 94°C/W
Storage temperature range, T_{stg} . . . . . –65°C to 150°C

† Stresses beyond those listed under "absolute maximum ratings" may cause permanent damage to the device. These are stress ratings only, and functional operation of the device at these or any other conditions beyond those indicated under "recommended operating conditions" is not implied. Exposure to absolute-maximum-rated conditions for extended periods may affect device reliability.

NOTES: 1. The input and output negative-voltage ratings may be exceeded if the input and output clamp-current ratings are observed.
2. The package thermal impedance is calculated in accordance with JESD 51.

recommended operating conditions (see Note 3)

		MIN	MAX	UNIT
V_{CC}	Supply voltage	4.5	5.5	V
V_{IH}	High-level control input voltage	2		V
V_{IL}	Low-level control input voltage		0.8	V
T_A	Operating free-air temperature	–40	85	°C

NOTE 3: All unused control inputs of the device must be held at V_{CC} or GND to ensure proper device operation. Refer to the TI application report, *Implications of Slow or Floating CMOS Inputs*, literature number SCBA004.

electrical characteristics over recommended operating free-air temperature range (unless otherwise noted)

PARAMETER		TEST CONDITIONS			MIN	TYP†	MAX	UNIT
V_{IK}		V_{CC} = 4.5 V,	I_I = –18 mA				–1.2	V
V_{OH}		See Figure 2						
I_I		V_{CC} = 5.5 V,	V_I = 5.5 V or GND				±1	µA
I_{CC}		V_{CC} = 5.5 V,	I_O = 0,	V_I = V_{CC} or GND			1.5	µA
ΔI_{CC}‡	Control inputs	V_{CC} = 5.5 V,	One input at 3.4 V,	Other inputs at V_{CC} or GND			2.5	mA
C_i	Control inputs	V_I = 3 V or 0						pF
$C_{io(OFF)}$		V_O = 3 V or 0,	$\overline{OE}$ = V_{CC}					pF
r_{on}§		V_{CC} = 4.5 V	V_I = 0	I_I = 64 mA				Ω
				I_I = 30 mA				
			V_I = 2.4 V,	I_I = 15 mA				

† All typical values are at V_{CC} = 5 V, T_A = 25°C.
‡ This is the increase in supply current for each input that is at the specified TTL voltage level rather than V_{CC} or GND.
§ Measured by the voltage drop between the A and B terminals at the indicated current through the switch. On-state resistance is determined by the lowest voltage of the two (A or B) terminals.

switching characteristics over recommended operating free-air temperature range, C_L = 50 pF (unless otherwise noted) (see Figure 1)

PARAMETER	FROM (INPUT)	TO (OUTPUT)	MIN	MAX	UNIT
t_{pd}¶	A or B	B or A			ns
t_{en}	$\overline{OE}$	A or B			ns
t_{dis}	$\overline{OE}$	A or B			ns

¶ The propagation delay is the calculated RC time constant of the typical on-state resistance of the switch and the specified load capacitance, when driven by an ideal voltage source (zero output impedance).

PRODUCT PREVIEW

PARAMETER MEASUREMENT INFORMATION

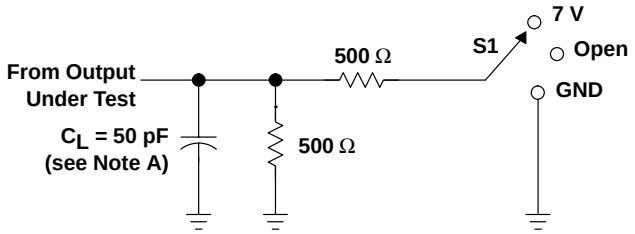

LOAD CIRCUIT

TEST	S1
t_{pd}	Open
t_{PLZ}/t_{PZL}	7 V
t_{PHZ}/t_{PZH}	Open

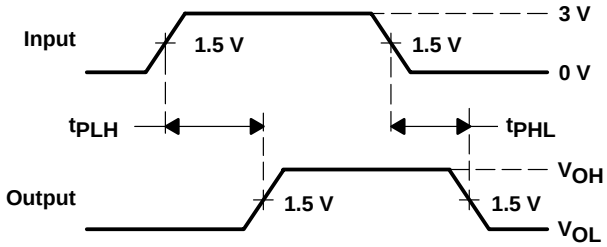

VOLTAGE WAVEFORMS
PROPAGATION DELAY TIMES

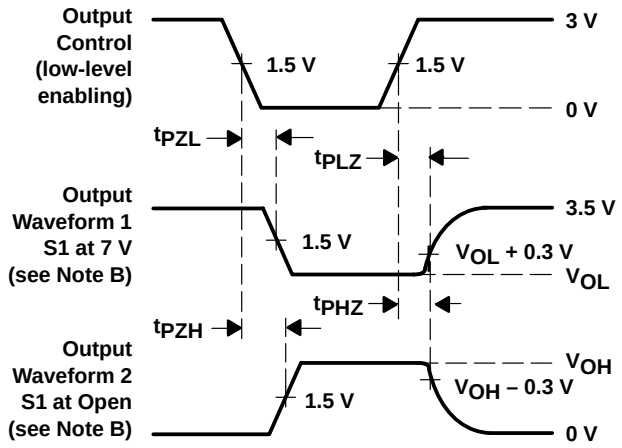

VOLTAGE WAVEFORMS
ENABLE AND DISABLE TIMES

NOTES:
A. C_L includes probe and jig capacitance.
B. Waveform 1 is for an output with internal conditions such that the output is low except when disabled by the output control. Waveform 2 is for an output with internal conditions such that the output is high except when disabled by the output control.
C. All input pulses are supplied by generators having the following characteristics: PRR ≤ 10 MHz, Z_O = 50 Ω, t_r ≤ 2.5 ns, t_f ≤ 2.5 ns.
D. The outputs are measured one at a time with one transition per measurement.
E. t_{PLZ} and t_{PHZ} are the same as t_{dis}.
F. t_{PZL} and t_{PZH} are the same as t_{en}.
G. t_{PLH} and t_{PHL} are the same as t_{pd}.

Figure 1. Load Circuit and Voltage Waveforms

PRODUCT PREVIEW

TYPICAL CHARACTERISTICS

OUTPUT VOLTAGE HIGH vs SUPPLY VOLTAGE

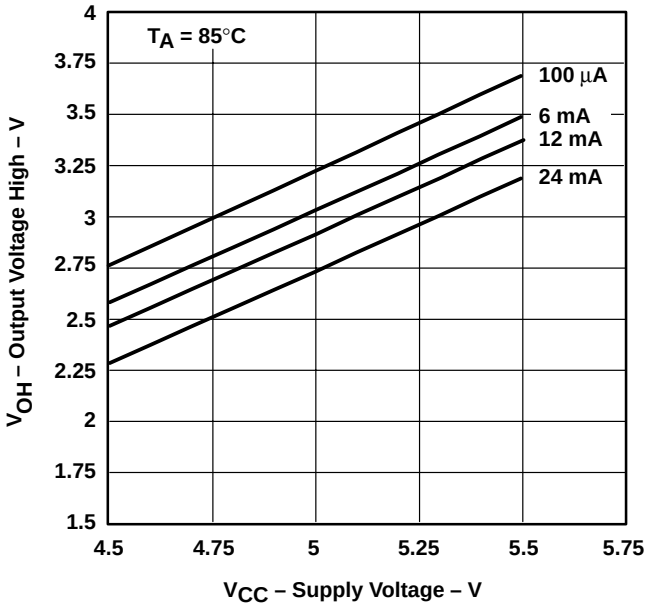

OUTPUT VOLTAGE HIGH vs SUPPLY VOLTAGE

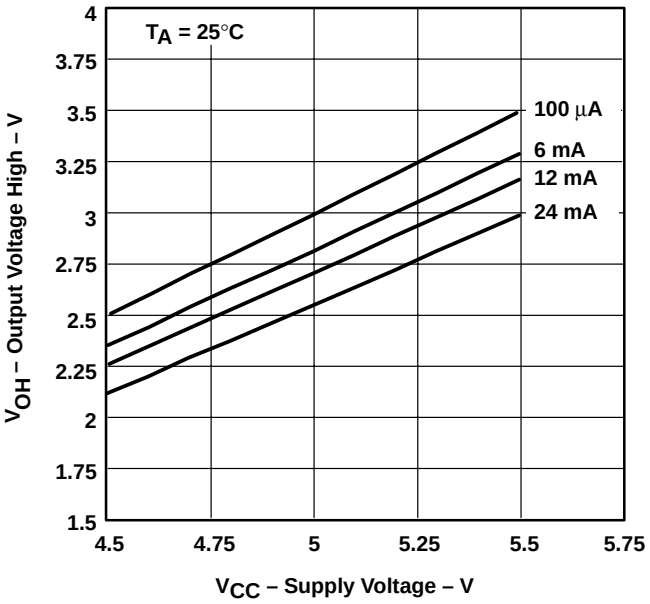

OUTPUT VOLTAGE HIGH vs SUPPLY VOLTAGE

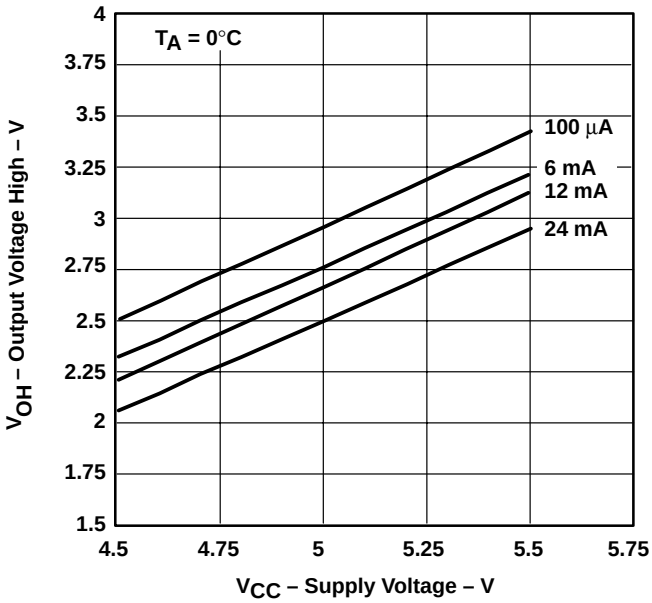

Figure 2. V_{OH} Values

PRODUCT PREVIEW

General Information 1
CBT Single Gates 2
CBT (2 to 10 Bit) 3
CBT Widebus™ 4
CBT With Integrated Diodes 5
CBTLV Single Gates 6
CBTLV (2 to 10 Bit) 7
CBTLV Widebus™ 8
Application Reports 9
Mechanical Data 10

Contents

		Page
SN74CBTLV1G125	Low-Voltage Single FET Bus Switch	6–3

- **5-Ω Switch Connection Between Two Ports**
- **Isolation Under Power-Off Conditions**
- **Packaged in Plastic Small-Outline Transistor Package**

DBV PACKAGE
(TOP VIEW)

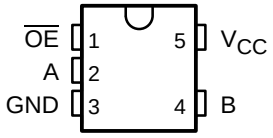

description

The SN74CBTLV1G125 features a single high-speed line switch. The switch is disabled when the output-enable ($\overline{OE}$) input is high.

To ensure the high-impedance state during power up or power down, $\overline{OE}$ should be tied to V_{CC} through a pullup resistor; the minimum value of the resistor is determined by the current-sinking capability of the driver.

The SN74CBTLV1G125 is characterized for operation from –40°C to 85°C.

FUNCTION TABLE

INPUT $\overline{OE}$	FUNCTION
L	A port = B port
H	Disconnect

logic diagram (positive logic)

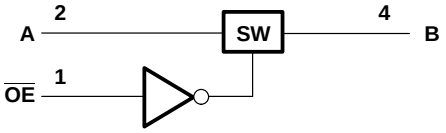

simplified schematic, each FET switch

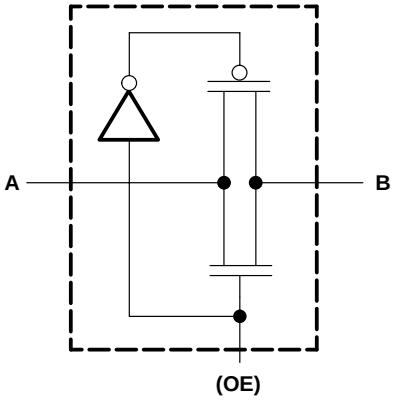

PRODUCT PREVIEW

PRODUCT PREVIEW information concerns products in the formative or design phase of development. Characteristic data and other specifications are design goals. Texas Instruments reserves the right to change or discontinue these products without notice.

Copyright © 1998, Texas Instruments Incorporated

PRODUCT PREVIEW

absolute maximum ratings over operating free-air temperature range (unless otherwise noted)†

Supply voltage range, V_{CC} . . . . . –0.5 V to 4.6 V
Input voltage range, V_I (see Note 1) . . . . . –0.5 V to 4.6 V
Continuous channel current . . . . . 128 mA
Input clamp current, I_{IK} ($V_{I/O}$ < 0) . . . . . –50 mA
Package thermal impedance, θ_{JA} (see Note 2) . . . . . 347°C/W
Storage temperature range, T_{stg} . . . . . –65°C to 150°C

† Stresses beyond those listed under "absolute maximum ratings" may cause permanent damage to the device. These are stress ratings only, and functional operation of the device at these or any other conditions beyond those indicated under "recommended operating conditions" is not implied. Exposure to absolute-maximum-rated conditions for extended periods may affect device reliability.

NOTES: 1. The input and output negative-voltage ratings may be exceeded if the input and output clamp-current ratings are observed.
2. The package thermal impedance is calculated in accordance with JESD 51.

recommended operating conditions (see Note 3)

			MIN	MAX	UNIT
V_{CC}	Supply voltage		2.3	3.6	V
V_{IH}	High-level control input voltage	V_{CC} = 2.3 V to 2.7 V	1.7		V
		V_{CC} = 2.7 V to 3.6 V	2		
V_{IL}	Low-level control input voltage	V_{CC} = 2.3 V to 2.7 V		0.7	V
		V_{CC} = 2.7 V to 3.6 V		0.8	
T_A	Operating free-air temperature		–40	85	°C

NOTE 3: All unused control inputs of the device must be held at V_{CC} or GND to ensure proper device operation. Refer to the TI application report, *Implications of Slow or Floating CMOS Inputs*, literature number SCBA004.

electrical characteristics over recommended operating free-air temperature range (unless otherwise noted)

PARAMETER		TEST CONDITIONS			MIN	TYP‡	MAX	UNIT
V_{IK}		V_{CC} = 3 V,	I_I = –18 mA				–1.2	V
I_I		V_{CC} = 3.6 V,	V_I = V_{CC} or GND				±1	µA
I_{off}		V_{CC} = 0,	V_I or V_O = 0 to 3.6 V				10	µA
I_{CC}		V_{CC} = 3.6 V,	I_O = 0,	V_I = V_{CC} or GND			10	µA
ΔI_{CC}§	Control inputs	V_{CC} = 3.6 V,	One input at 3 V,	Other inputs at V_{CC} or GND			300	µA
C_i	Control inputs	V_I = 3 V or 0						pF
$C_{io(OFF)}$		V_O = 3 V or 0,	$\overline{OE}$ = V_{CC}					pF
r_{on}¶		V_{CC} = 2.3 V, TYP at V_{CC} = 2.5 V	V_I = 0	I_I = 64 mA				Ω
				I_I = 24 mA				
			V_I = 1.7 V,	I_I = 15 mA				
		V_{CC} = 3 V	V_I = 0	I_I = 64 mA				
				I_I = 24 mA				
			V_I = 2.4 V,	I_I = 15 mA				

‡ All typical values are at V_{CC} = 3.3 V (unless otherwise noted), T_A = 25°C.
§ This is the increase in supply current for each input that is at the specified voltage level rather than V_{CC} or GND.
¶ Measured by the voltage drop between the A and B terminals at the indicated current through the switch. On-state resistance is determined by the lower of the voltages of the two (A or B) terminals.

switching characteristics over recommended operating free-air temperature range (unless otherwise noted) (see Figures 1 and 2)

PARAMETER	FROM (INPUT)	TO (OUTPUT)	V_{CC} = 2.5 V ± 0.2 V		V_{CC} = 3.3 V ± 0.3 V		UNIT
			MIN	MAX	MIN	MAX	
t_{pd}†	A or B	B or A					ns
t_{en}	$\overline{OE}$	A or B					ns
t_{dis}	$\overline{OE}$	A or B					ns

† The propagation delay is the calculated RC time constant of the typical on-state resistance of the switch and a load capacitance of 50 pF, when driven by an ideal voltage source (zero output impedance).

PARAMETER MEASUREMENT INFORMATION
V_{CC} = 2.5 V ± 0.2 V

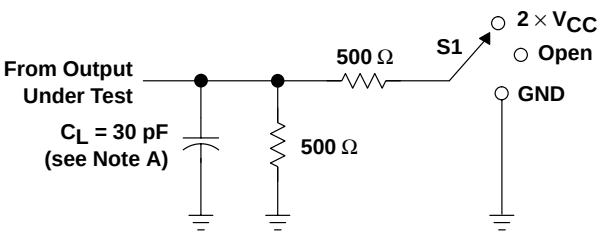

LOAD CIRCUIT

TEST	S1
t_{pd}	Open
t_{PLZ}/t_{PZL}	2 × V_{CC}
t_{PHZ}/t_{PZH}	GND

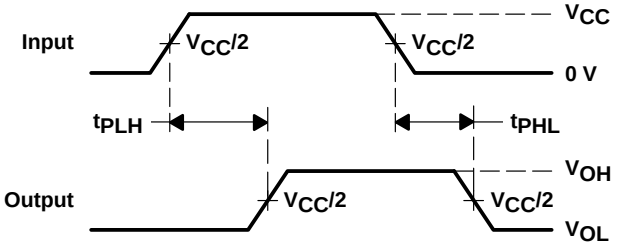

VOLTAGE WAVEFORMS
PROPAGATION DELAY TIMES

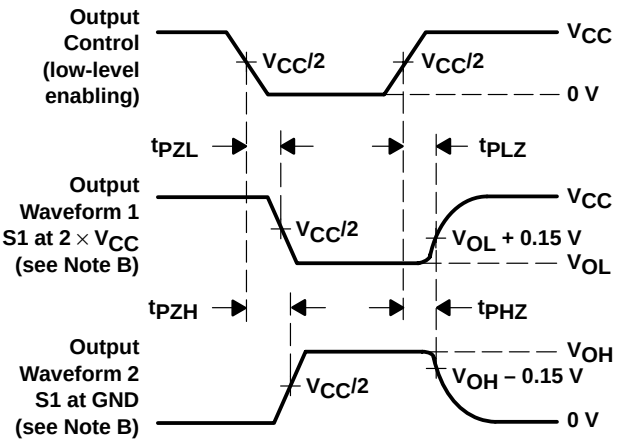

VOLTAGE WAVEFORMS
ENABLE AND DISABLE TIMES

NOTES: A. C_L includes probe and jig capacitance.
B. Waveform 1 is for an output with internal conditions such that the output is low except when disabled by the output control. Waveform 2 is for an output with internal conditions such that the output is high except when disabled by the output control.
C. All input pulses are supplied by generators having the following characteristics: PRR ≤ 10 MHz, Z_O = 50 Ω, t_r ≤ 2 ns, t_f ≤ 2 ns.
D. The outputs are measured one at a time with one transition per measurement.
E. t_{PLZ} and t_{PHZ} are the same as t_{dis}.
F. t_{PZL} and t_{PZH} are the same as t_{en}.
G. t_{PLH} and t_{PHL} are the same as t_{pd}.

Figure 1. Load Circuit and Voltage Waveforms

PRODUCT PREVIEW

PARAMETER MEASUREMENT INFORMATION
V_{CC} = 3.3 V ± 0.3 V

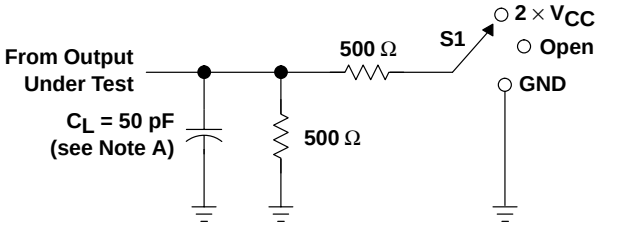

LOAD CIRCUIT

TEST	S1
t_{pd}	Open
t_{PLZ}/t_{PZL}	2 × V_{CC}
t_{PHZ}/t_{PZH}	GND

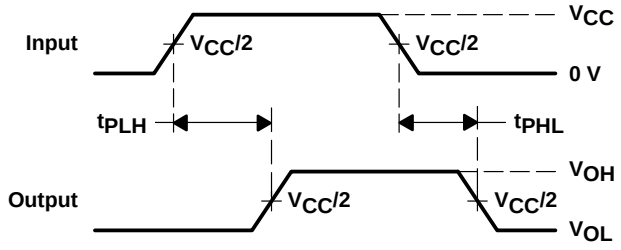

VOLTAGE WAVEFORMS
PROPAGATION DELAY TIMES

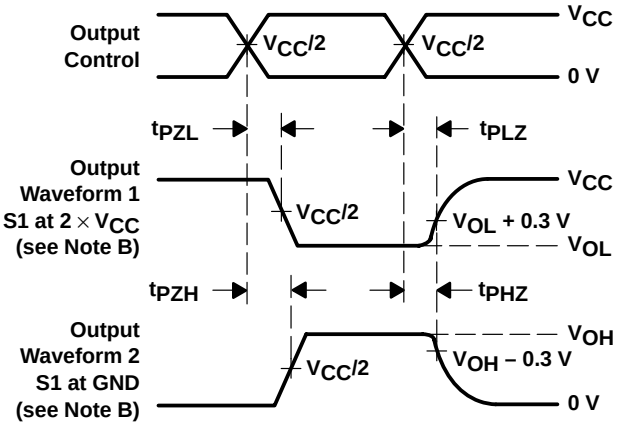

VOLTAGE WAVEFORMS
ENABLE AND DISABLE TIMES

NOTES: A. C_L includes probe and jig capacitance.
B. Waveform 1 is for an output with internal conditions such that the output is low except when disabled by the output control. Waveform 2 is for an output with internal conditions such that the output is high except when disabled by the output control.
C. All input pulses are supplied by generators having the following characteristics: PRR ≤ 10 MHz, Z_O = 50 Ω, t_r ≤ 2 ns, t_f ≤ 2 ns.
D. The outputs are measured one at a time with one transition per measurement.
E. t_{PLZ} and t_{PHZ} are the same as t_{dis}.
F. t_{PZL} and t_{PZH} are the same as t_{en}.
G. t_{PLH} and t_{PHL} are the same as t_{pd}.

Figure 2. Load Circuit and Voltage Waveforms

PRODUCT PREVIEW

General Information 1
CBT Single Gates 2
CBT (2 to 10 Bit) 3
CBT Widebus™ 4
CBT With Integrated Diodes 5
CBTLV Single Gates 6
CBTLV (2 to 10 Bit) 7
CBTLV Widebus™ 8
Application Reports 9
Mechanical Data 10

Contents

		Page
SN74CBTLV3125	Low-Voltage Quadruple FET Bus Switch	7–3
SN74CBTLV3126	Low-Voltage Quadruple FET Bus Switch	7–9
SN74CBTLV3245A	Low-Voltage Octal FET Bus Switch	7–15
SN74CBTLV3251	Low-Voltage 1-of-8 FET Multiplexer/Demultiplexer	7–21
SN74CBTLV3253	Low-Voltage Dual 1-of-4 FET Multiplexer/Demultiplexer	7–27
SN74CBTLV3257	Low-Voltage 4-Bit 1-of-2 FET Multiplexer/Demultiplexer	7–33
SN74CBTLV3383	Low-Voltage 10-Bit FET Bus-Exchange Switch	7–39
SN74CBTLV3384	Low-Voltage 10-Bit FET Bus Switch	7–45
SN74CBTLV3857	Low-Voltage 10-Bit FET Bus Switch With Internal Pulldown Resistors	7–51
SN74CBTLV3861	Low-Voltage 10-Bit FET Bus Switch	7–55

- **Standard ’125-Type Pinout**
- **5-Ω Switch Connection Between Two Ports**
- **Isolation Under Power-Off Conditions**
- **Package Options Include Plastic Small-Outline (D), Thin Very Small-Outline (DGV), and Thin Shrink Small-Outline (PW) Packages**

D, DGV, OR PW PACKAGE
(TOP VIEW)

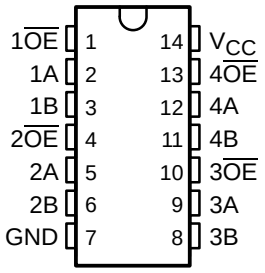

description

The SN74CBTLV3125 quadruple FET bus switch features independent line switches. Each switch is disabled when the associated output-enable ($\overline{OE}$) input is high.

To ensure the high-impedance state during power up or power down, $\overline{OE}$ should be tied to V_{CC} through a pullup resistor; the minimum value of the resistor is determined by the current-sinking capability of the driver.

The SN74CBTLV3125 is characterized for operation from –40°C to 85°C.

FUNCTION TABLE
(each bus switch)

INPUT $\overline{OE}$	FUNCTION
L	A port = B port
H	Disconnect

logic diagram (positive logic)

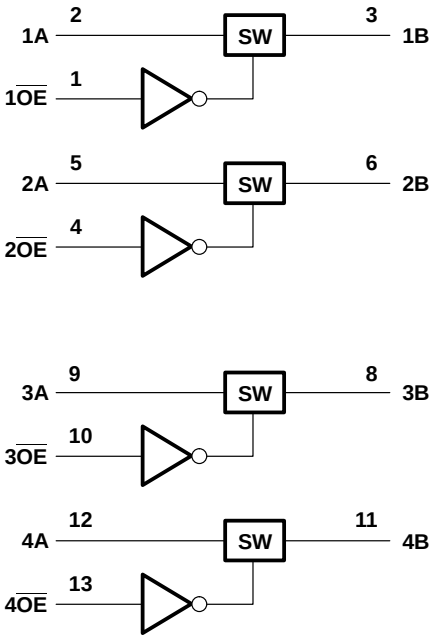

PRODUCT PREVIEW

PRODUCT PREVIEW information concerns products in the formative or design phase of development. Characteristic data and other specifications are design goals. Texas Instruments reserves the right to change or discontinue these products without notice.

Copyright © 1998, Texas Instruments Incorporated

PRODUCT PREVIEW

simplified schematic, each FET switch

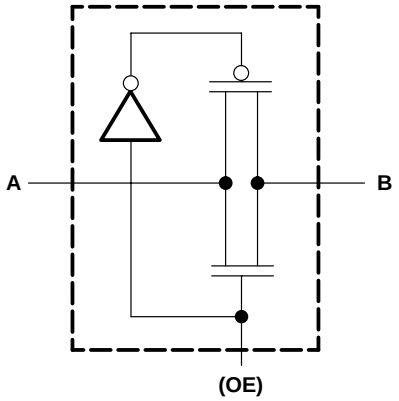

absolute maximum ratings over operating free-air temperature range (unless otherwise noted)†

Supply voltage range, V_{CC} . . . . . –0.5 V to 4.6 V
Input voltage range, V_I (see Note 1) . . . . . –0.5 V to 4.6 V
Continuous channel current . . . . . 128 mA
Input clamp current, I_{IK} ($V_{I/O} < 0$) . . . . . –50 mA
Package thermal impedance, θ_{JA} (see Note 2): D package . . . . . 127°C/W
DGV package . . . . . 182°C/W
PW package . . . . . 170°C/W
Storage temperature range, T_{stg} . . . . . –65°C to 150°C

† Stresses beyond those listed under “absolute maximum ratings” may cause permanent damage to the device. These are stress ratings only, and functional operation of the device at these or any other conditions beyond those indicated under “recommended operating conditions” is not implied. Exposure to absolute-maximum-rated conditions for extended periods may affect device reliability.

NOTES: 1. The input and output negative-voltage ratings may be exceeded if the input and output clamp-current ratings are observed.
2. The package thermal impedance is calculated in accordance with JESD 51.

recommended operating conditions (see Note 3)

			MIN	MAX	UNIT
V_{CC}	Supply voltage		2.3	3.6	V
V_{IH}	High-level control input voltage	V_{CC} = 2.3 V to 2.7 V	1.7		V
		V_{CC} = 2.7 V to 3.6 V	2		
V_{IL}	Low-level control input voltage	V_{CC} = 2.3 V to 2.7 V		0.7	V
		V_{CC} = 2.7 V to 3.6 V		0.8	
T_A	Operating free-air temperature		–40	85	°C

NOTE 3: All unused control inputs of the device must be held at V_{CC} or GND to ensure proper device operation. Refer to the TI application report, *Implications of Slow or Floating CMOS Inputs*, literature number SCBA004.

electrical characteristics over recommended operating free-air temperature range (unless otherwise noted)

PARAMETER		TEST CONDITIONS			MIN	TYP†	MAX	UNIT
V_{IK}		V_{CC} = 3 V,	I_I = –18 mA				–1.2	V
I_I		V_{CC} = 3.6 V,	V_I = V_{CC} or GND				±5	µA
I_{off}		V_{CC} = 0,	V_I or V_O= 0 to 4.5 V				10	µA
I_{CC}		V_{CC} = 3.6 V,	I_O = 0,	V_I = V_{CC} or GND			10	µA
ΔI_{CC}‡	Control inputs	V_{CC} = 3.6 V,	One input at 3 V,	Other inputs at V_{CC} or GND			300	µA
C_i	Control inputs	V_I = 3 V or 0						pF
$C_{io(OFF)}$		V_O = 3 V or 0,	$\overline{OE}$ = V_{CC}					pF
r_{on}§		V_{CC} = 2.3 V, TYP at V_{CC} = 2.5 V	V_I = 0	I_I = 64 mA				Ω
				I_I = 24 mA				
			V_I = 1.7 V,	I_I = 15 mA				
		V_{CC} = 3 V	V_I = 0	I_I = 64 mA				
				I_I = 24 mA				
			V_I = 2.4 V,	I_I = 15 mA				

† All typical values are at V_{CC} = 3.3 V (unless otherwise noted), T_A = 25°C.
‡ This is the increase in supply current for each input that is at the specified voltage level rather than V_{CC} or GND.
§ Measured by the voltage drop between the A and B terminals at the indicated current through the switch. On-state resistance is determined by the lower of the voltages of the two (A or B) terminals.

switching characteristics over recommended operating free-air temperature range (unless otherwise noted) (see Figures 1 and 2)

PARAMETER	FROM (INPUT)	TO (OUTPUT)	V_{CC} = 2.5 V ± 0.2 V		V_{CC} = 3.3 V ± 0.3 V		UNIT
			MIN	MAX	MIN	MAX	
t_{pd}¶	A or B	B or A					ns
t_{en}	$\overline{OE}$	A or B					ns
t_{dis}	$\overline{OE}$	A or B					ns

¶ The propagation delay is the calculated RC time constant of the typical on-state resistance of the switch and the specified load capacitance, when driven by an ideal voltage source (zero output impedance).

PRODUCT PREVIEW

PARAMETER MEASUREMENT INFORMATION
V_{CC} = 2.5 V ± 0.2 V

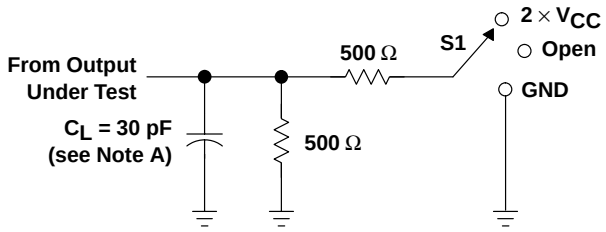

LOAD CIRCUIT

TEST	S1
t_{pd} t_{PLZ}/t_{PZL} t_{PHZ}/t_{PZH}	Open 2 × V_{CC} GND

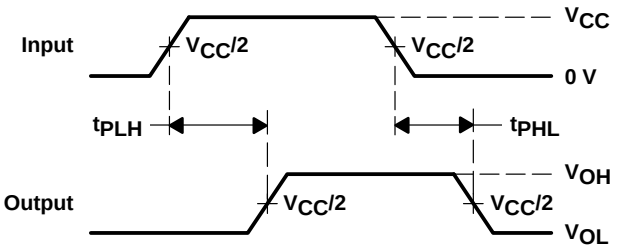

VOLTAGE WAVEFORMS
PROPAGATION DELAY TIMES

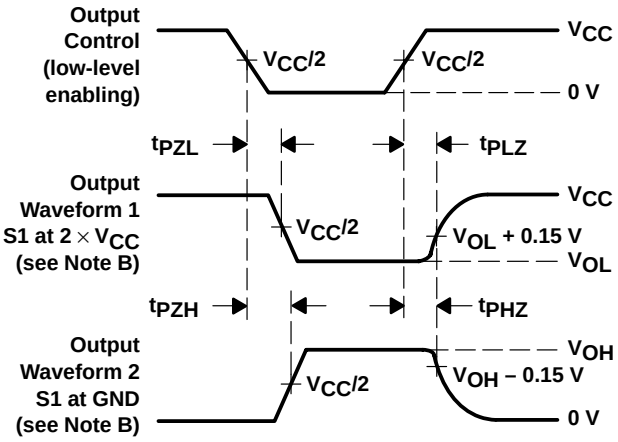

VOLTAGE WAVEFORMS
ENABLE AND DISABLE TIMES

NOTES:
A. C_L includes probe and jig capacitance.
B. Waveform 1 is for an output with internal conditions such that the output is low except when disabled by the output control. Waveform 2 is for an output with internal conditions such that the output is high except when disabled by the output control.
C. All input pulses are supplied by generators having the following characteristics: PRR ≤ 10 MHz, Z_O = 50 Ω, t_r ≤ 2 ns, t_f ≤ 2 ns.
D. The outputs are measured one at a time with one transition per measurement.
E. t_{PLZ} and t_{PHZ} are the same as t_{dis}.
F. t_{PZL} and t_{PZH} are the same as t_{en}.
G. t_{PLH} and t_{PHL} are the same as t_{pd}.

Figure 1. Load Circuit and Voltage Waveforms

PRODUCT PREVIEW

PARAMETER MEASUREMENT INFORMATION
V_{CC} = 3.3 V ± 0.3 V

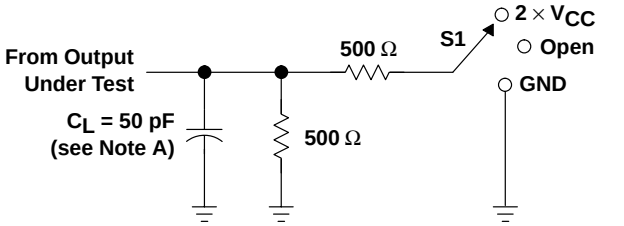

LOAD CIRCUIT

TEST	S1
t_{pd}	Open
t_{PLZ}/t_{PZL}	2 × V_{CC}
t_{PHZ}/t_{PZH}	GND

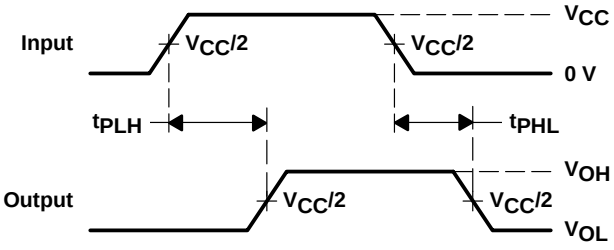

VOLTAGE WAVEFORMS
PROPAGATION DELAY TIMES

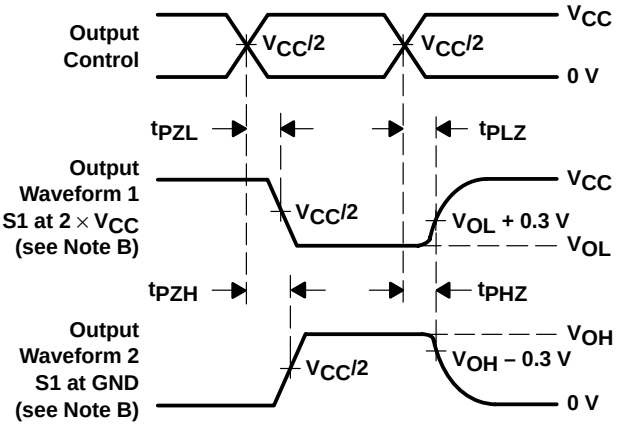

VOLTAGE WAVEFORMS
ENABLE AND DISABLE TIMES

NOTES: A. C_L includes probe and jig capacitance.
B. Waveform 1 is for an output with internal conditions such that the output is low except when disabled by the output control. Waveform 2 is for an output with internal conditions such that the output is high except when disabled by the output control.
C. All input pulses are supplied by generators having the following characteristics: PRR ≤ 10 MHz, Z_O = 50 Ω, t_r ≤ 2 ns, t_f ≤ 2 ns.
D. The outputs are measured one at a time with one transition per measurement.
E. t_{PLZ} and t_{PHZ} are the same as t_{dis}.
F. t_{PZL} and t_{PZH} are the same as t_{en}.
G. t_{PLH} and t_{PHL} are the same as t_{pd}.

Figure 2. Load Circuit and Voltage Waveforms

PRODUCT PREVIEW

- **Standard ’126-Type Pinout**
- **5-Ω Switch Connection Between Two Ports**
- **Isolation Under Power-Off Conditions**
- **Package Options Include Plastic Small-Outline (D), Thin Very Small-Outline (DGV), and Thin Shrink Small-Outline (PW) Packages**

D, DGV, OR PW PACKAGE
(TOP VIEW)

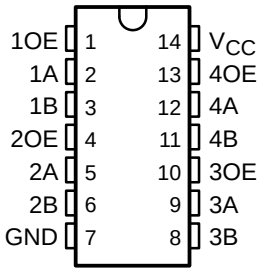

description

The SN74CBTLV3126 quadruple FET bus switch features independent line switches. Each switch is disabled when the associated output-enable (OE) input is low.

To ensure the high-impedance state during power up or power down, OE should be tied to GND through a pulldown resistor; the minimum value of the resistor is determined by the current-sinking capability of the driver.

The SN74CBTLV3126 is characterized for operation from –40°C to 85°C.

FUNCTION TABLE
(each bus switch)

INPUT OE	FUNCTION
L	Disconnect
H	A port = B port

logic diagram (positive logic)

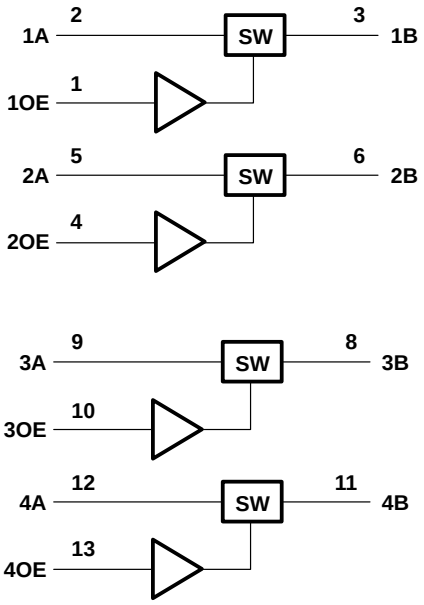

PRODUCT PREVIEW

PRODUCT PREVIEW information concerns products in the formative or design phase of development. Characteristic data and other specifications are design goals. Texas Instruments reserves the right to change or discontinue these products without notice.

Copyright © 1998, Texas Instruments Incorporated

PRODUCT PREVIEW

simplified schematic, each FET switch

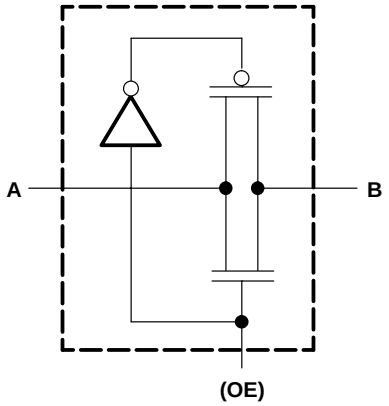

absolute maximum ratings over operating free-air temperature range (unless otherwise noted)†

Supply voltage range, V_{CC} . . . . . –0.5 V to 4.6 V
Input voltage range, V_I (see Note 1) . . . . . –0.5 V to 4.6 V
Continuous channel current . . . . . 128 mA
Input clamp current, I_{IK} ($V_{I/O} < 0$) . . . . . –50 mA
Package thermal impedance, θ_{JA} (see Note 2): D package . . . . . 127°C/W
DGV package . . . . . 182°C/W
PW package . . . . . 170°C/W
Storage temperature range, T_{stg} . . . . . –65°C to 150°C

† Stresses beyond those listed under “absolute maximum ratings” may cause permanent damage to the device. These are stress ratings only, and functional operation of the device at these or any other conditions beyond those indicated under “recommended operating conditions” is not implied. Exposure to absolute-maximum-rated conditions for extended periods may affect device reliability.

NOTES: 1. The input and output negative-voltage ratings may be exceeded if the input and output clamp-current ratings are observed.
2. The package thermal impedance is calculated in accordance with JESD 51.

recommended operating conditions (see Note 3)

			MIN	MAX	UNIT
V_{CC}	Supply voltage		2.3	3.6	V
V_{IH}	High-level control input voltage	V_{CC} = 2.3 V to 2.7 V	1.7		V
		V_{CC} = 2.7 V to 3.6 V	2		
V_{IL}	Low-level control input voltage	V_{CC} = 2.3 V to 2.7 V		0.7	V
		V_{CC} = 2.7 V to 3.6 V		0.8	
T_A	Operating free-air temperature		–40	85	°C

NOTE 3: All unused control inputs of the device must be held at V_{CC} or GND to ensure proper device operation. Refer to the TI application report, *Implications of Slow or Floating CMOS Inputs*, literature number SCBA004.

electrical characteristics over recommended operating free-air temperature range (unless otherwise noted)

PARAMETER		TEST CONDITIONS			MIN	TYP†	MAX	UNIT
V_{IK}		V_{CC} = 3 V,	I_I = –18 mA				–1.2	V
I_I		V_{CC} = 3.6 V,	V_I = V_{CC} or GND				±5	µA
I_{off}		V_{CC} = 0,	V_I or V_O= 0 to 4.5 V				10	µA
I_{CC}		V_{CC} = 3.6 V,	I_O = 0,	V_I = V_{CC} or GND			10	µA
ΔI_{CC}‡	Control inputs	V_{CC} = 3.6 V,	One input at 3 V,	Other inputs at V_{CC} or GND			300	µA
C_i	Control inputs	V_I = 3 V or 0						pF
$C_{io(OFF)}$		V_O = 3 V or 0,	OE = V_{CC}					pF
r_{on}§		V_{CC} = 2.3 V, TYP at V_{CC} = 2.5 V	V_I = 0	I_I = 64 mA				Ω
				I_I = 24 mA				
			V_I = 1.7 V,	I_I = 15 mA				
		V_{CC} = 3 V	V_I = 0	I_I = 64 mA				
				I_I = 24 mA				
			V_I = 2.4 V,	I_I = 15 mA				

† All typical values are at V_{CC} = 3.3 V (unless otherwise noted), T_A = 25°C.
‡ This is the increase in supply current for each input that is at the specified voltage level rather than V_{CC} or GND.
§ Measured by the voltage drop between the A and B terminals at the indicated current through the switch. On-state resistance is determined by the lower of the voltages of the two (A or B) terminals.

switching characteristics over recommended operating free-air temperature range (unless otherwise noted) (see Figures 1 and 2)

PARAMETER	FROM (INPUT)	TO (OUTPUT)	V_{CC} = 2.5 V ± 0.2 V		V_{CC} = 3.3 V ± 0.3 V		UNIT
			MIN	MAX	MIN	MAX	
t_{pd}¶	A or B	B or A					ns
t_{en}	OE	A or B					ns
t_{dis}	OE	A or B					ns

¶ The propagation delay is the calculated RC time constant of the typical on-state resistance of the switch and the specified load capacitance, when driven by an ideal voltage source (zero output impedance).

PRODUCT PREVIEW

PRODUCT PREVIEW

PARAMETER MEASUREMENT INFORMATION
V_{CC} = 2.5 V ± 0.2 V

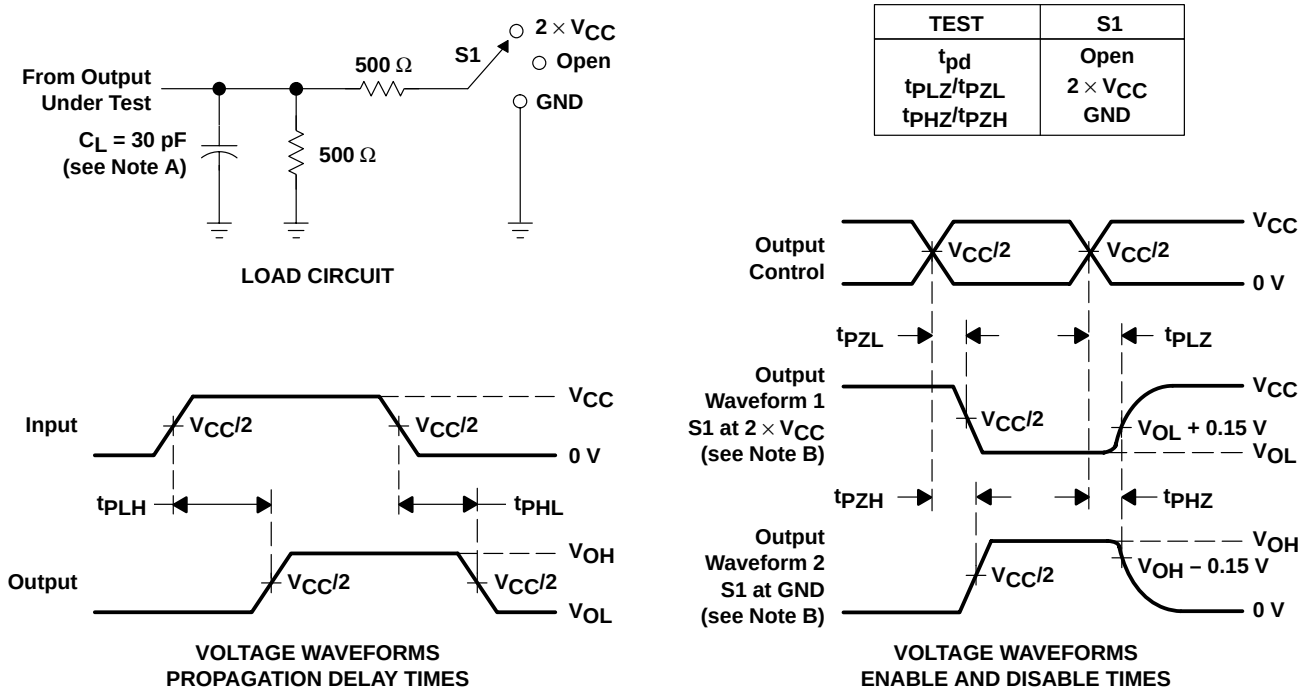

TEST	S1
t_{pd}	Open
t_{PLZ}/t_{PZL}	2 × V_{CC}
t_{PHZ}/t_{PZH}	GND

NOTES:
A. C_L includes probe and jig capacitance.
B. Waveform 1 is for an output with internal conditions such that the output is low except when disabled by the output control. Waveform 2 is for an output with internal conditions such that the output is high except when disabled by the output control.
C. All input pulses are supplied by generators having the following characteristics: PRR ≤ 10 MHz, Z_O = 50 Ω, t_r ≤ 2 ns, t_f ≤ 2 ns.
D. The outputs are measured one at a time with one transition per measurement.
E. t_{PLZ} and t_{PHZ} are the same as t_{dis}.
F. t_{PZL} and t_{PZH} are the same as t_{en}.
G. t_{PLH} and t_{PHL} are the same as t_{pd}.

Figure 1. Load Circuit and Voltage Waveforms

PARAMETER MEASUREMENT INFORMATION
V_{CC} = 3.3 V ± 0.3 V

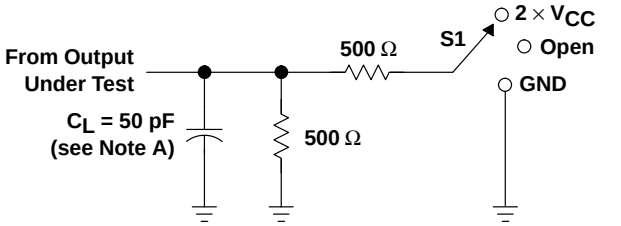

LOAD CIRCUIT

TEST	S1
t_{pd} t_{PLZ}/t_{PZL} t_{PHZ}/t_{PZH}	Open 2 × V_{CC} GND

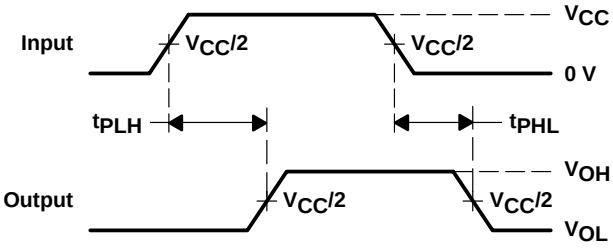

VOLTAGE WAVEFORMS
PROPAGATION DELAY TIMES

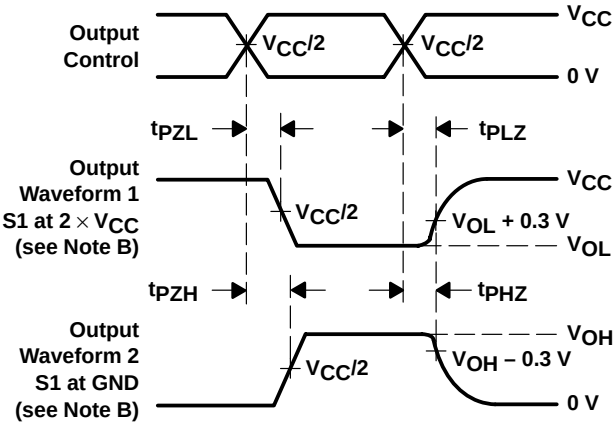

VOLTAGE WAVEFORMS
ENABLE AND DISABLE TIMES

NOTES: A. C_L includes probe and jig capacitance.
B. Waveform 1 is for an output with internal conditions such that the output is low except when disabled by the output control. Waveform 2 is for an output with internal conditions such that the output is high except when disabled by the output control.
C. All input pulses are supplied by generators having the following characteristics: PRR ≤ 10 MHz, Z_O = 50 Ω, t_r ≤ 2 ns, t_f ≤ 2 ns.
D. The outputs are measured one at a time with one transition per measurement.
E. t_{PLZ} and t_{PHZ} are the same as t_{dis}.
F. t_{PZL} and t_{PZH} are the same as t_{en}.
G. t_{PLH} and t_{PHL} are the same as t_{pd}.

Figure 2. Load Circuit and Voltage Waveforms

PRODUCT PREVIEW

- **Standard ’245-Type Pinout**
- **5-Ω Switch Connection Between Two Ports**
- **Isolation Under Power-Off Conditions**
- **ESD Protection Exceeds 2000 V Per MIL-STD-883, Method 3015; Exceeds 200 V Using Machine Model (C = 200 pF, R = 0)**
- **Latch-Up Performance Exceeds 250 mA Per JESD 17**
- **Package Options Include Shrink Small-Outline (DBQ), Thin Very Small-Outline (DGV), Small-Outline (DW), and Thin Shrink Small-Outline (PW) Packages**

DBQ, DGV, DW, OR PW PACKAGE
(TOP VIEW)

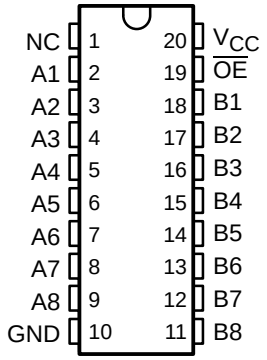

NC – No internal connection

description

The SN74CBTLV3245A provides eight bits of high-speed bus switching in a standard ’245 device pinout. The low on-state resistance of the switch allows connections to be made with minimal propagation delay.

The device is organized as one 8-bit switch. When output enable ($\overline{OE}$) is low, the 8-bit bus switch is on and port A is connected to port B. When $\overline{OE}$ is high, the switch is open and a high-impedance state exists between the two ports.

To ensure the high-impedance state during power up or power down, $\overline{OE}$ should be tied to V_{CC} through a pullup resistor; the minimum value of the resistor is determined by the current-sinking capability of the driver.

The SN74CBTLV3245A is characterized for operation from –40°C to 85°C.

FUNCTION TABLE

INPUT $\overline{OE}$	FUNCTION
L	A port = B port
H	Disconnect

logic diagram (positive logic)

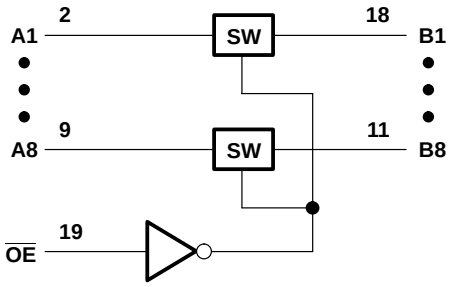

PRODUCTION DATA information is current as of publication date. Products conform to specifications per the terms of Texas Instruments standard warranty. Production processing does not necessarily include testing of all parameters.

Copyright © 1998, Texas Instruments Incorporated

simplified schematic, each FET switch

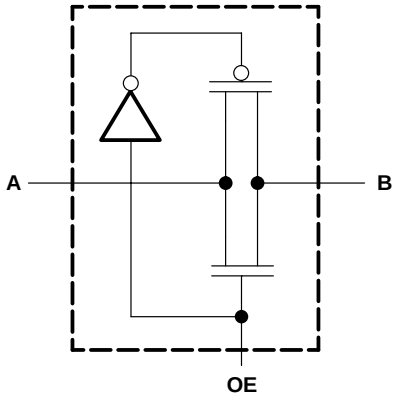

absolute maximum ratings over operating free-air temperature range (unless otherwise noted)†

Supply voltage range, V_{CC} . . . . . –0.5 V to 4.6 V
Input voltage range, V_I (see Note 1) . . . . . –0.5 V to 4.6 V
Continuous channel current . . . . . 128 mA
Input clamp current, I_{IK} ($V_{I/O} < 0$) . . . . . –50 mA
Package thermal impedance, θ_{JA} (see Note 2): DBQ package . . . . . 113°C/W
DGV package . . . . . 146°C/W
DW package . . . . . 97°C/W
PW package . . . . . 128°C/W
Storage temperature range, T_{stg} . . . . . –65°C to 150°C

† Stresses beyond those listed under “absolute maximum ratings” may cause permanent damage to the device. These are stress ratings only, and functional operation of the device at these or any other conditions beyond those indicated under “recommended operating conditions” is not implied. Exposure to absolute-maximum-rated conditions for extended periods may affect device reliability.

NOTES: 1. The input and output negative-voltage ratings may be exceeded if the input and output clamp-current ratings are observed.
2. The package thermal impedance is calculated in accordance with JESD 51.

recommended operating conditions (see Note 3)

			MIN	MAX	UNIT
V_{CC}	Supply voltage		2.3	3.6	V
V_{IH}	High-level control input voltage	V_{CC} = 2.3 V to 2.7 V	1.7		V
		V_{CC} = 2.7 V to 3.6 V	2		
V_{IL}	Low-level control input voltage	V_{CC} = 2.3 V to 2.7 V		0.7	V
		V_{CC} = 2.7 V to 3.6 V		0.8	
T_A	Operating free-air temperature		–40	85	°C

NOTE 3: All unused control inputs of the device must be held at V_{CC} or GND to ensure proper device operation. Refer to the TI application report, *Implications of Slow or Floating CMOS Inputs*, literature number SCBA004.

electrical characteristics over recommended operating free-air temperature range (unless otherwise noted)

PARAMETER		TEST CONDITIONS			MIN	TYP†	MAX	UNIT
V_{IK}	Control inputs	V_{CC} = 3 V,	I_I = –18 mA				–1.2	V
	Data inputs						–0.8	
I_I		V_{CC} = 3.6 V,	V_I = V_{CC} or GND				±60	µA
I_{off}		V_{CC} = 0,	V_I or V_O = 0 to 3.6 V				40	µA
I_{CC}		V_{CC} = 3.6 V,	I_O = 0,	V_I = V_{CC} or GND			20	µA
ΔI_{CC}‡	Control inputs	V_{CC} = 3.6 V,	One input at 3 V,	Other inputs at V_{CC} or GND			300	µA
C_i	Control inputs	V_I = 3 V or 0				4		pF
$C_{io(OFF)}$		V_O = 3 V or 0,	$\overline{OE}$ = V_{CC}			9		pF
r_{on}§		V_{CC} = 2.3 V, TYP at V_{CC} = 2.5 V	V_I = 0	I_O = 64 mA		5	8	Ω
				I_O = 24 mA		5	8	
			V_I = 1.7 V,	I_O = 15 mA		27	40	
		V_{CC} = 3 V	V_I = 0	I_O = 64 mA		5	7	
				I_O = 24 mA		5	7	
			V_I = 2.4 V,	I_O = 15 mA		10	15	

† All typical values are at V_{CC} = 3.3 V (unless otherwise noted), T_A = 25°C.
‡ This is the increase in supply current for each input that is at the specified voltage level rather than V_{CC} or GND.
§ Measured by the voltage drop between the A and B terminals at the indicated current through the switch. On-state resistance is determined by the lower of the voltages of the two (A or B) terminals.

switching characteristics over recommended operating free-air temperature range (unless otherwise noted) (see Figures 1 and 2)

PARAMETER	FROM (INPUT)	TO (OUTPUT)	V_{CC} = 2.5 V ± 0.2 V		V_{CC} = 3.3 V ± 0.3 V		UNIT
			MIN	MAX	MIN	MAX	
t_{pd}¶	A or B	B or A		0.15		0.25	ns
t_{en}	$\overline{OE}$	A or B	1	6	1	4.7	ns
t_{dis}	$\overline{OE}$	A or B	1	6.1	1	6.4	ns

¶ The propagation delay is the calculated RC time constant of the typical on-state resistance of the switch and the specified load capacitance when driven by an ideal voltage source (zero output impedance).

PARAMETER MEASUREMENT INFORMATION
V_{CC} = 2.5 V ± 0.2 V

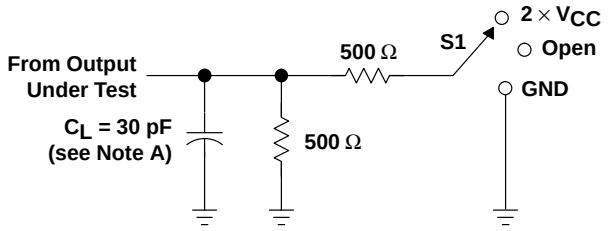

LOAD CIRCUIT

TEST	S1
t_{pd}	Open
t_{PLZ}/t_{PZL}	2 × V_{CC}
t_{PHZ}/t_{PZH}	GND

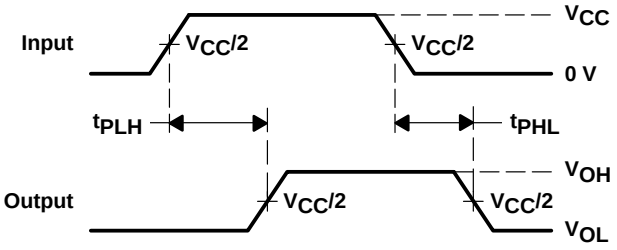

VOLTAGE WAVEFORMS
PROPAGATION DELAY TIMES

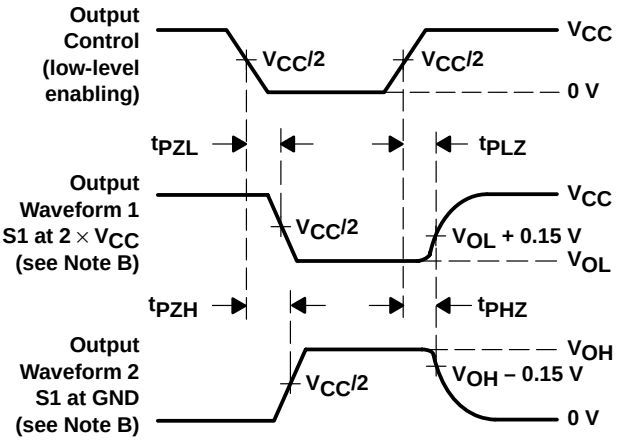

VOLTAGE WAVEFORMS
ENABLE AND DISABLE TIMES

NOTES: A. C_L includes probe and jig capacitance.
B. Waveform 1 is for an output with internal conditions such that the output is low except when disabled by the output control. Waveform 2 is for an output with internal conditions such that the output is high except when disabled by the output control.
C. All input pulses are supplied by generators having the following characteristics: PRR ≤ 10 MHz, Z_O = 50 Ω, t_r ≤ 2 ns, t_f ≤ 2 ns.
D. The outputs are measured one at a time with one transition per measurement.
E. t_{PLZ} and t_{PHZ} are the same as t_{dis}.
F. t_{PZL} and t_{PZH} are the same as t_{en}.
G. t_{PLH} and t_{PHL} are the same as t_{pd}.

Figure 1. Load Circuit and Voltage Waveforms

PARAMETER MEASUREMENT INFORMATION
V_{CC} = 3.3 V ± 0.3 V

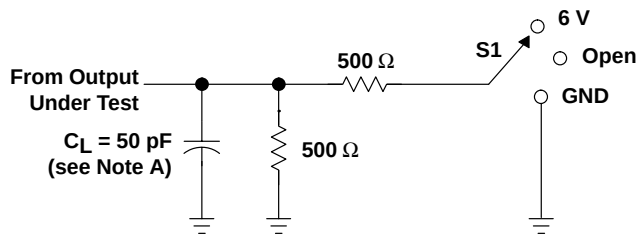

LOAD CIRCUIT

TEST	S1
t_{pd} t_{PLZ}/t_{PZL} t_{PHZ}/t_{PZH}	Open 6 V GND

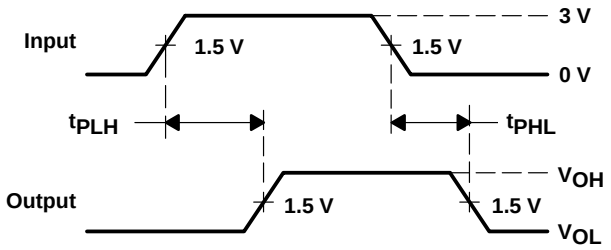

VOLTAGE WAVEFORMS
PROPAGATION DELAY TIMES

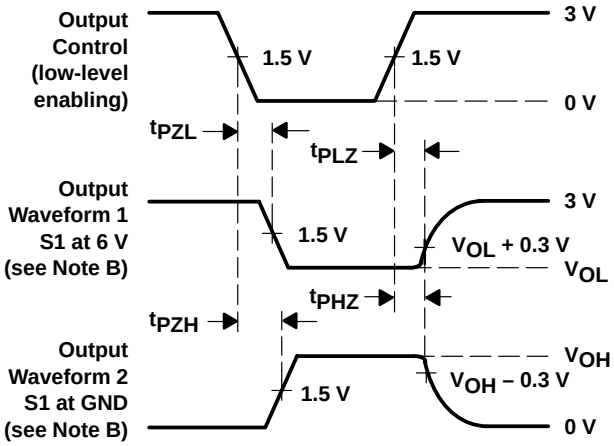

VOLTAGE WAVEFORMS
ENABLE AND DISABLE TIMES

NOTES: A. C_L includes probe and jig capacitance.
B. Waveform 1 is for an output with internal conditions such that the output is low except when disabled by the output control. Waveform 2 is for an output with internal conditions such that the output is high except when disabled by the output control.
C. All input pulses are supplied by generators having the following characteristics: PRR ≤ 0 MHz, Z_O = 50 Ω, t_r ≤ 2.5 ns, t_f ≤ 2.5 ns.
D. The outputs are measured one at a time with one transition per measurement.
E. t_{PLZ} and t_{PHZ} are the same as t_{dis}.
F. t_{PZL} and t_{PZH} are the same as t_{en}.
G. t_{PLH} and t_{PHL} are the same as t_{pd}.

Figure 2. Load Circuit and Voltage Waveforms

- **Functionally Equivalent to QS3251**
- **5-Ω Switch Connection Between Two Ports**
- **Isolation Under Power-Off Conditions**
- **Package Options Include Thin Very Small-Outline (DGV), Small-Outline (DW), and Thin Shrink Small-Outline (PW) Packages**

DGV, DW, OR PW PACKAGE
(TOP VIEW)

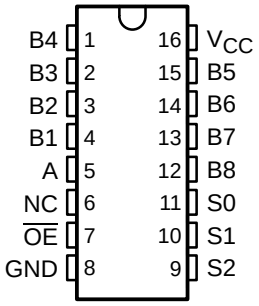

NC – No internal connection

description

The SN74CBTLV3251 device is a 1-of-8 high-speed FET multiplexer/demultiplexer. The low on-state resistance of the switch allows connections to be made with minimal propagation delay.

The select inputs (S0, S1, S2) control the data flow. The FET multiplexers/demultiplexers are disabled when the output-enable ($\overline{OE}$) input is high.

To ensure the high-impedance state during power up or power down, $\overline{OE}$ should be tied to V_{CC} through a pullup resistor; the minimum value of the resistor is determined by the current-sinking capability of the driver.

The SN74CBTLV3251 is characterized for operation from –40°C to 85°C.

FUNCTION TABLE

INPUTS				FUNCTION
$\overline{OE}$	S2	S1	S0	
L	L	L	L	A port = B1 port
L	L	L	H	A port = B2 port
L	L	H	L	A port = B3 port
L	L	H	H	A port = B4 port
L	H	L	L	A port = B5 port
L	H	L	H	A port = B6 port
L	H	H	L	A port = B7 port
L	H	H	H	A port = B8 port
H	X	X	X	Disconnect

PRODUCT PREVIEW

PRODUCT PREVIEW information concerns products in the formative or design phase of development. Characteristic data and other specifications are design goals. Texas Instruments reserves the right to change or discontinue these products without notice.

Copyright © 1998, Texas Instruments Incorporated

PRODUCT PREVIEW

logic diagram (positive logic)

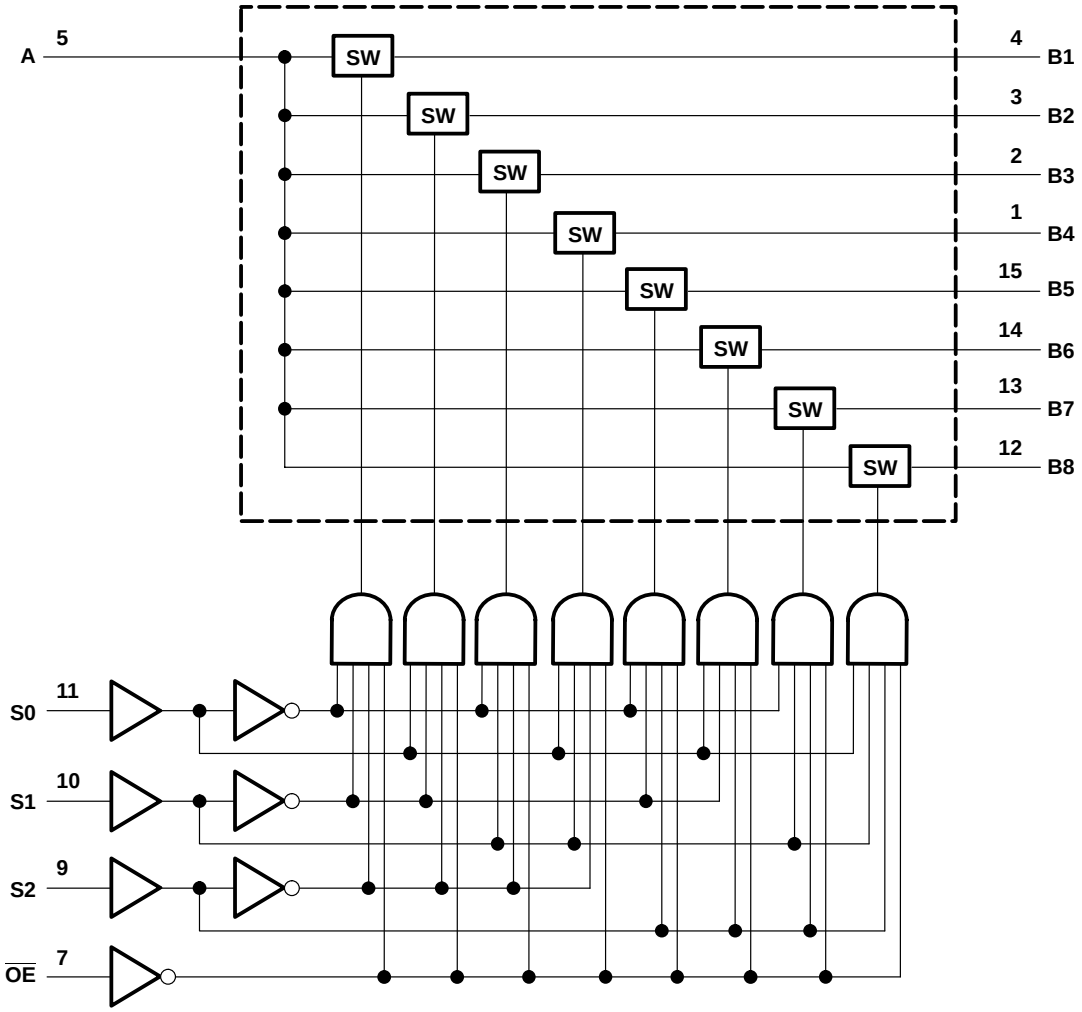

simplified schematic, each FET switch

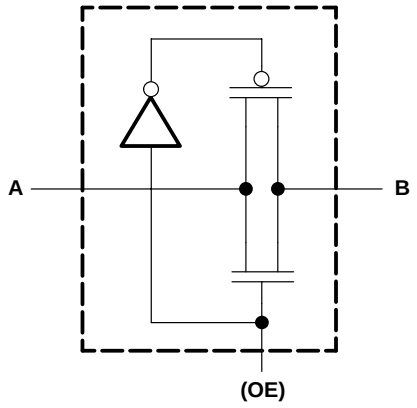

absolute maximum ratings over operating free-air temperature range (unless otherwise noted)†

Supply voltage range, V_{CC} . . . . . –0.5 V to 4.6 V
Input voltage range, V_I (see Note 1) . . . . . –0.5 V to 4.6 V
Continuous channel current . . . . . 128 mA
Input clamp current, I_K ($V_{I/O}$ < 0) . . . . . –50 mA
Package thermal impedance, θ_{JA} (see Note 2): DGV package . . . . . 180°C/W
DW package . . . . . 105°C/W
PW package . . . . . 149°C/W
Storage temperature range, T_{stg} . . . . . –65°C to 150°C

† Stresses beyond those listed under "absolute maximum ratings" may cause permanent damage to the device. These are stress ratings only, and functional operation of the device at these or any other conditions beyond those indicated under "recommended operating conditions" is not implied. Exposure to absolute-maximum-rated conditions for extended periods may affect device reliability.

NOTES: 1. The input and output negative-voltage ratings may be exceeded if the input and output clamp-current ratings are observed.
2. The package thermal impedance is calculated in accordance with JESD 51.

recommended operating conditions (see Note 3)

			MIN	MAX	UNIT
V_{CC}	Supply voltage		2.3	3.6	V
V_{IH}	High-level control input voltage	V_{CC} = 2.3 V to 2.7 V	1.7		V
		V_{CC} = 2.7 V to 3.6 V	2		
V_{IL}	Low-level control input voltage	V_{CC} = 2.3 V to 2.7 V		0.7	V
		V_{CC} = 2.7 V to 3.6 V		0.8	
T_A	Operating free-air temperature		–40	85	°C

NOTE 3: All unused control inputs of the device must be held at V_{CC} or GND to ensure proper device operation. Refer to the TI application report, *Implications of Slow or Floating CMOS Inputs*, literature number SCBA004.

electrical characteristics over recommended operating free-air temperature range (unless otherwise noted)

PARAMETER		TEST CONDITIONS			MIN	TYP‡	MAX	UNIT
V_{IK}		V_{CC} = 3 V,	I_I = –18 mA				–1.2	V
I_I		V_{CC} = 3.6 V,	V_I = V_{CC} or GND				±1	µA
I_{off}		V_{CC} = 0,	V_I or V_O = 0 to 4.5 V				10	µA
I_{CC}		V_{CC} = 3.6 V,	I_O = 0,	V_I = V_{CC} or GND			10	µA
ΔI_{CC}§	Control inputs	V_{CC} = 3.6 V,	One input at 3 V,	Other inputs at V_{CC} or GND			300	µA
C_i	Control inputs	V_I = 3 V or 0						pF
$C_{io(OFF)}$	A port	V_O = 3 V or 0,	$\overline{OE}$ = V_{CC}					pF
	B port							
r_{on}¶		V_{CC} = 2.3 V, TYP at V_{CC} = 2.5 V	V_I = 0	I_I = 64 mA				Ω
				I_I = 24 mA				
			V_I = 1.7 V,	I_I = 15 mA				
		V_{CC} = 3 V	V_I = 0	I_I = 64 mA				
				I_I = 24 mA				
			V_I = 2.4 V,	I_I = 15 mA				

‡ All typical values are at V_{CC} = 3.3 V (unless otherwise noted), T_A = 25°C.
§ This is the increase in supply current for each input that is at the specified voltage level rather than V_{CC} or GND.
¶ Measured by the voltage drop between the A and the B terminals at the indicated current through the switch. On-state resistance is determined by the lower of the voltages of the two (A or B) terminals.

PRODUCT PREVIEW

PRODUCT PREVIEW

switching characteristics over recommended operating free-air temperature range (unless otherwise noted) (see Figures 1 and 2)

PARAMETER	FROM (INPUT)	TO (OUTPUT)	V_{CC} = 2.5 V ± 0.2 V		V_{CC} = 3.3 V ± 0.3 V		UNIT
			MIN	MAX	MIN	MAX	
t_{pd}	A or B†	B or A					ns
	S	A					
t_{en}	S	B					ns
t_{dis}	S	B					ns
t_{en}	$\overline{OE}$	A or B					ns
t_{dis}	$\overline{OE}$	A or B					ns

† The propagation delay is based on the RC time constant of the typical on-state resistance of the switch and the specified load capacitance, when driven by an ideal voltage source (zero output impedance).

PARAMETER MEASUREMENT INFORMATION
V_{CC} = 2.5 V ± 0.2 V

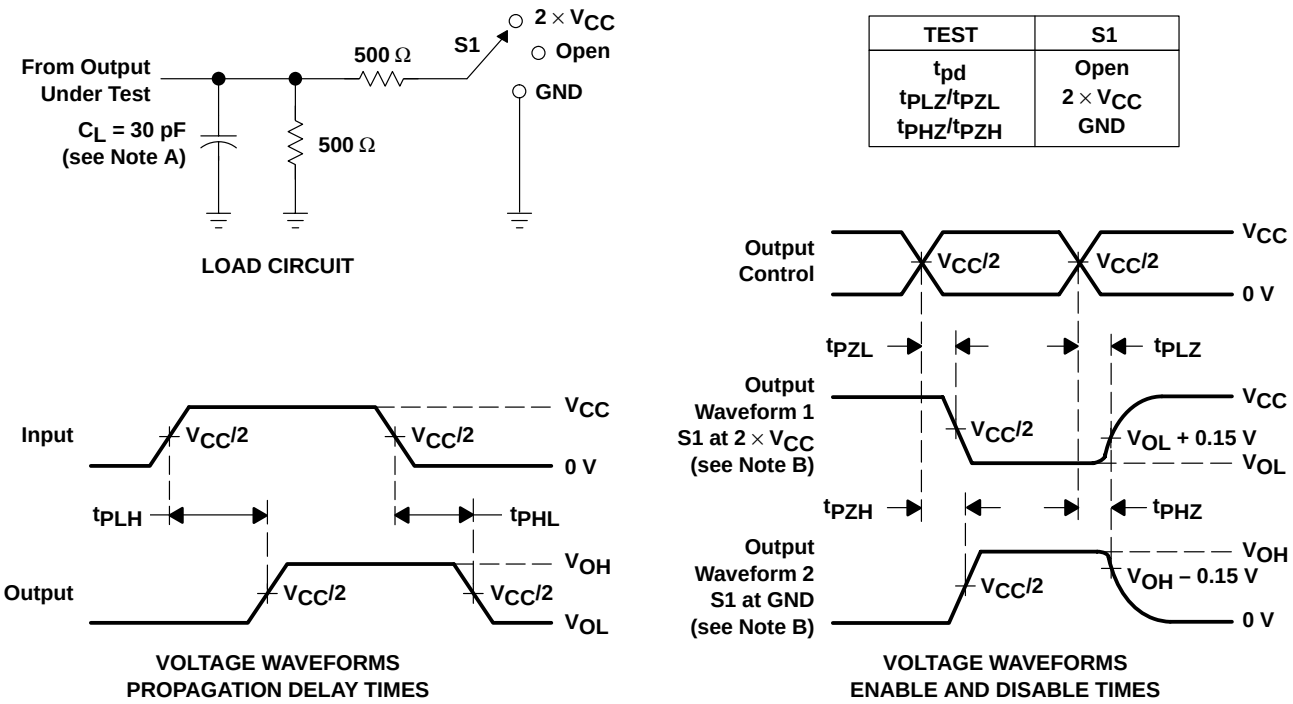

TEST	S1
t_{pd}	Open
t_{PLZ}/t_{PZL}	2 × V_{CC}
t_{PHZ}/t_{PZH}	GND

NOTES:
A. C_L includes probe and jig capacitance.
B. Waveform 1 is for an output with internal conditions such that the output is low except when disabled by the output control. Waveform 2 is for an output with internal conditions such that the output is high except when disabled by the output control.
C. All input pulses are supplied by generators having the following characteristics: PRR ≤ 10 MHz, Z_O = 50 Ω, t_r ≤ 2 ns, t_f ≤ 2 ns.
D. The outputs are measured one at a time with one transition per measurement.
E. t_{PLZ} and t_{PHZ} are the same as t_{dis}.
F. t_{PZL} and t_{PZH} are the same as t_{en}.
G. t_{PLH} and t_{PHL} are the same as t_{pd}.

Figure 1. Load Circuit and Voltage Waveforms

PARAMETER MEASUREMENT INFORMATION
V_{CC} = 3.3 V ± 0.3 V

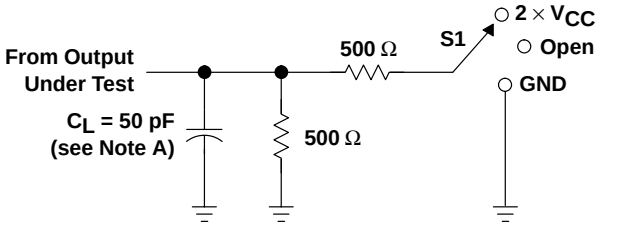

LOAD CIRCUIT

TEST	S1
t_{pd} t_{PLZ}/t_{PZL} t_{PHZ}/t_{PZH}	Open 2 × V_{CC} GND

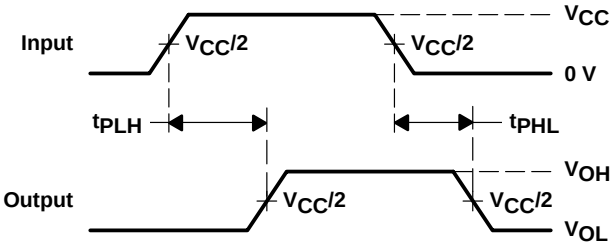

VOLTAGE WAVEFORMS
PROPAGATION DELAY TIMES

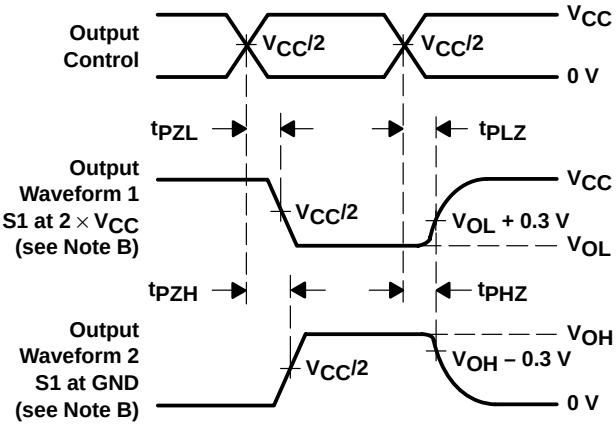

VOLTAGE WAVEFORMS
ENABLE AND DISABLE TIMES

NOTES: A. C_L includes probe and jig capacitance.
B. Waveform 1 is for an output with internal conditions such that the output is low except when disabled by the output control. Waveform 2 is for an output with internal conditions such that the output is high except when disabled by the output control.
C. All input pulses are supplied by generators having the following characteristics: PRR ≤ 10 MHz, Z_O = 50 Ω, t_r ≤ 2 ns, t_f ≤ 2 ns.
D. The outputs are measured one at a time with one transition per measurement.
E. t_{PLZ} and t_{PHZ} are the same as t_{dis}.
F. t_{PZL} and t_{PZH} are the same as t_{en}.
G. t_{PLH} and t_{PHL} are the same as t_{pd}.

Figure 2. Load Circuit and Voltage Waveforms

PRODUCT PREVIEW

- **Functionally Equivalent to QS3253**
- **5-Ω Switch Connection Between Two Ports**
- **Isolation Under Power-Off Conditions**
- **Package Options Include Thin Very Small-Outline (DGV), Small-Outline (DW), and Thin Shrink Small-Outline (PW) Packages**

DGV, DW, OR PW PACKAGE
(TOP VIEW)

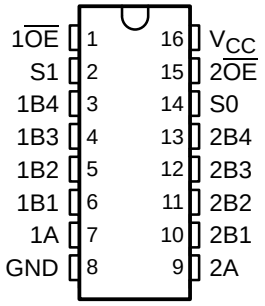

description

The SN74CBTLV3253 is a dual 1-of-4 high-speed FET multiplexer/demultiplexer. The low on-state resistance of the switch allows connections to be made with minimal propagation delay.

The select (S0, S1) inputs control the data flow. The FET multiplexers/demultiplexers are disabled when the associated output-enable ($\overline{OE}$) input is high.

To ensure the high-impedance state during power up or power down, $\overline{OE}$ should be tied to V_{CC} through a pullup resistor; the minimum value of the resistor is determined by the current-sinking capability of the driver.

The SN74CBTLV3253 is characterized for operation from –40°C to 85°C.

FUNCTION TABLE
(each multiplexer/demultiplexer)

INPUTS			FUNCTION
$\overline{OE}$	S1	S0	
L	L	L	A port = B1 port
L	L	H	A port = B2 port
L	H	L	A port = B3 port
L	H	H	A port = B4 port
H	X	X	Disconnect

PRODUCT PREVIEW

PRODUCT PREVIEW information concerns products in the formative or design phase of development. Characteristic data and other specifications are design goals. Texas Instruments reserves the right to change or discontinue these products without notice.

Copyright © 1998, Texas Instruments Incorporated

PRODUCT PREVIEW

logic diagram (positive logic)

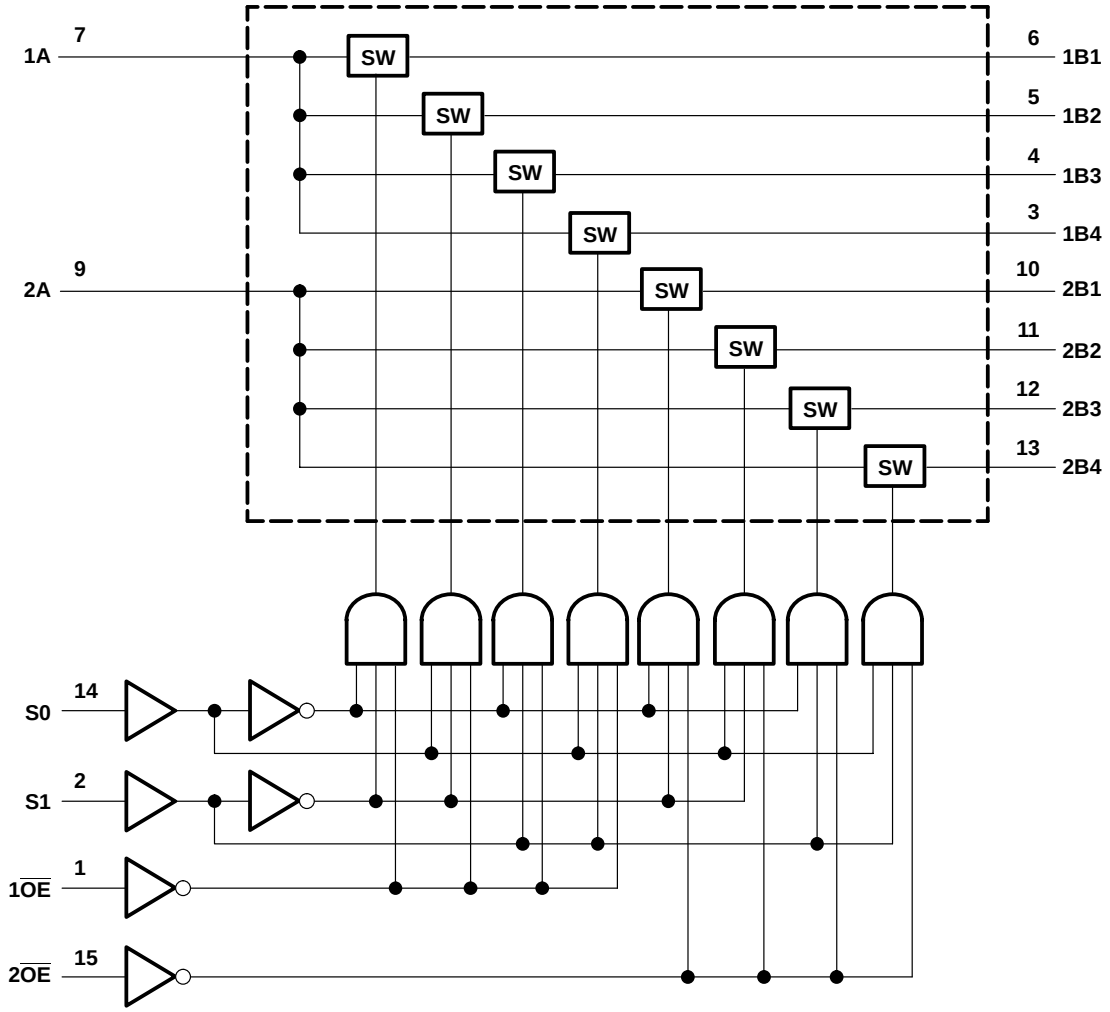

simplified schematic, each FET switch

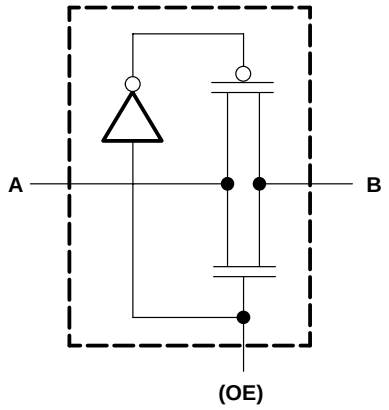

absolute maximum ratings over operating free-air temperature range (unless otherwise noted)†

Supply voltage range, V_{CC} . . . . . –0.5 V to 4.6 V
Input voltage range, V_I (see Note 1) . . . . . –0.5 V to 4.6 V
Continuous channel current . . . . . 128 mA
Input clamp current, I_{IK} ($V_{I/O}$ < 0) . . . . . –50 mA
Package thermal impedance, θ_{JA} (see Note 2): DGV package . . . . . 180°C/W
DW package . . . . . 105°C/W
PW package . . . . . 149°C/W
Storage temperature range, T_{stg} . . . . . –65°C to 150°C

† Stresses beyond those listed under "absolute maximum ratings" may cause permanent damage to the device. These are stress ratings only, and functional operation of the device at these or any other conditions beyond those indicated under "recommended operating conditions" is not implied. Exposure to absolute-maximum-rated conditions for extended periods may affect device reliability.

NOTES: 1. The input and output negative-voltage ratings may be exceeded if the input and output clamp-current ratings are observed.
2. The package thermal impedance is calculated in accordance with JESD 51.

recommended operating conditions (see Note 3)

			MIN	MAX	UNIT
V_{CC}	Supply voltage		2.3	3.6	V
V_{IH}	High-level control input voltage	V_{CC} = 2.3 V to 2.7 V	1.7		V
		V_{CC} = 2.7 V to 3.6 V	2		
V_{IL}	Low-level control input voltage	V_{CC} = 2.3 V to 2.7 V		0.7	V
		V_{CC} = 2.7 V to 3.6 V		0.8	
T_A	Operating free-air temperature		–40	85	°C

NOTE 3: All unused control inputs of the device must be held at V_{CC} or GND to ensure proper device operation. Refer to the TI application report, *Implications of Slow or Floating CMOS Inputs*, literature number SCBA004.

electrical characteristics over recommended operating free-air temperature range (unless otherwise noted)

PARAMETER		TEST CONDITIONS			MIN	TYP‡	MAX	UNIT
V_{IK}		V_{CC} = 3 V,	I_I = –18 mA				–1.2	V
I_I		V_{CC} = 3.6 V,	V_I = V_{CC} or GND				±1	µA
I_{off}		V_{CC} = 0,	V_I or V_O= 0 to 4.5 V				10	µA
I_{CC}		V_{CC} = 3.6 V,	I_O = 0,	V_I = V_{CC} or GND			10	µA
ΔI_{CC}§	Control inputs	V_{CC} = 3.6 V,	One input at 3 V,	Other inputs at V_{CC} or GND			300	µA
C_i	Control inputs	V_I = 3 V or 0						pF
$C_{io(OFF)}$	A port	V_O = 3 V or 0,	$\overline{OE}$ = V_{CC}					pF
	B port							
r_{on}¶		V_{CC} = 2.3 V, TYP at V_{CC} = 2.5 V	V_I = 0	I_I = 64 mA				Ω
				I_I = 24 mA				
			V_I = 1.7 V,	I_I = 15 mA				
		V_{CC} = 3 V	V_I = 0	I_I = 64 mA				
				I_I = 24 mA				
			V_I = 2.4 V,	I_I = 15 mA				

‡ All typical values are at V_{CC} = 3.3 V (unless otherwise noted), T_A = 25°C.
§ This is the increase in supply current for each input that is at the specified voltage level rather than V_{CC} or GND.
¶ Measured by the voltage drop between the A and the B terminals at the indicated current through the switch. On-state resistance is determined by the lower of the voltages of the two (A or B) terminals.

PRODUCT PREVIEW

PRODUCT PREVIEW

switching characteristics over recommended operating free-air temperature range (unless otherwise noted) (see Figures 1 and 2)

PARAMETER	FROM (INPUT)	TO (OUTPUT)	V_{CC} = 2.5 V ± 0.2 V		V_{CC} = 3.3 V ± 0.3 V		UNIT
			MIN	MAX	MIN	MAX	
t_{pd}	A or B†	B or A					ns
	S	A or B					
t_{en}	S	A or B					ns
t_{dis}	S	A or B					ns
t_{en}	$\overline{OE}$	A or B					ns
t_{dis}	$\overline{OE}$	A or B					ns

† The propagation delay is the calculated RC time constant of the typical on-state resistance of the switch and the specified load capacitance, when driven by an ideal voltage source (zero output impedance).

PARAMETER MEASUREMENT INFORMATION
V_{CC} = 2.5 V ± 0.2 V

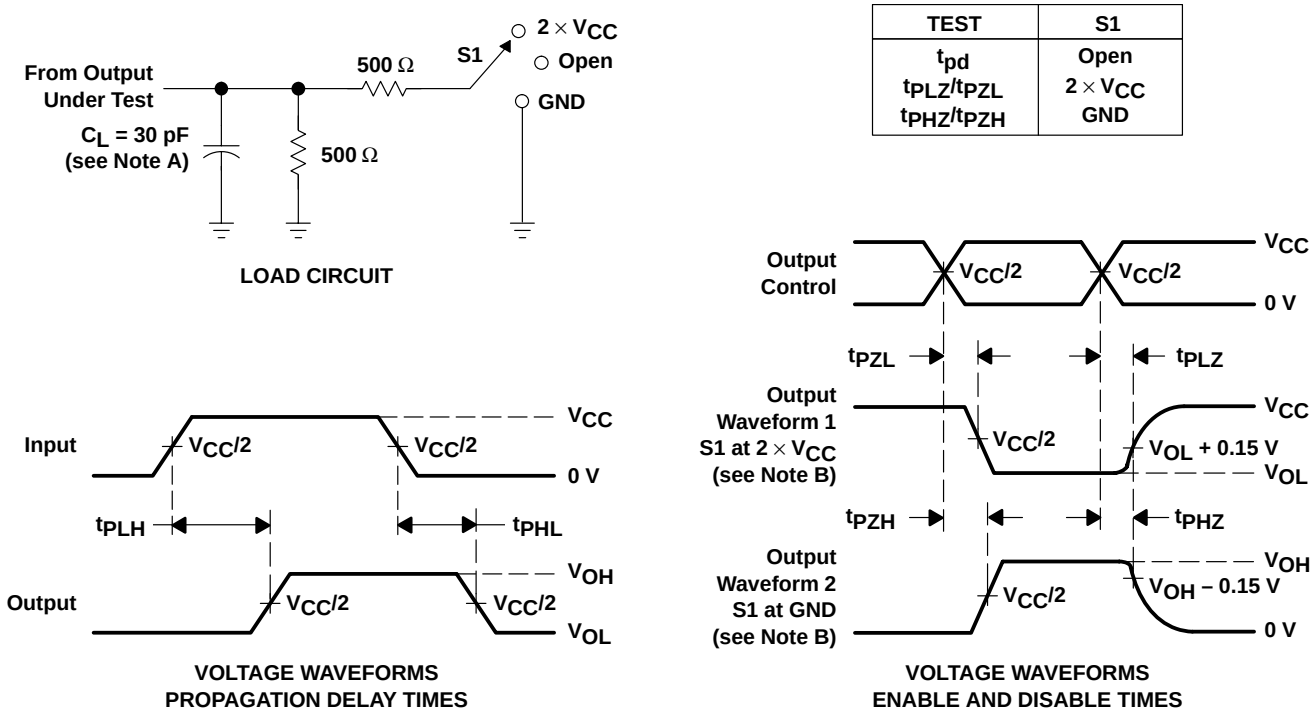

TEST	S1
t_{pd}	Open
t_{PLZ}/t_{PZL}	2 × V_{CC}
t_{PHZ}/t_{PZH}	GND

NOTES:
A. C_L includes probe and jig capacitance.
B. Waveform 1 is for an output with internal conditions such that the output is low except when disabled by the output control. Waveform 2 is for an output with internal conditions such that the output is high except when disabled by the output control.
C. All input pulses are supplied by generators having the following characteristics: PRR ≤ 10 MHz, Z_O = 50 Ω, t_r ≤ 2 ns, t_f ≤ 2 ns.
D. The outputs are measured one at a time with one transition per measurement.
E. t_{PLZ} and t_{PHZ} are the same as t_{dis}.
F. t_{PZL} and t_{PZH} are the same as t_{en}.
G. t_{PLH} and t_{PHL} are the same as t_{pd}.

Figure 1. Load Circuit and Voltage Waveforms

PARAMETER MEASUREMENT INFORMATION
V_{CC} = 3.3 V ± 0.3 V

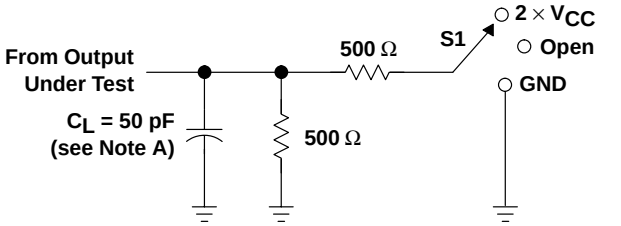

LOAD CIRCUIT

TEST	S1
t_{pd} t_{PLZ}/t_{PZL} t_{PHZ}/t_{PZH}	Open 2 × V_{CC} GND

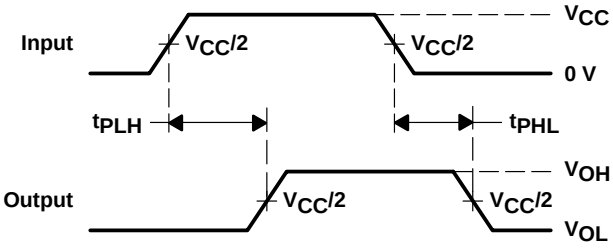

VOLTAGE WAVEFORMS
PROPAGATION DELAY TIMES

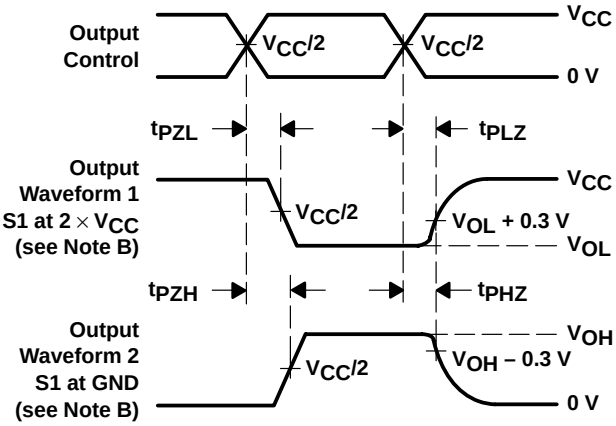

VOLTAGE WAVEFORMS
ENABLE AND DISABLE TIMES

NOTES: A. C_L includes probe and jig capacitance.
B. Waveform 1 is for an output with internal conditions such that the output is low except when disabled by the output control. Waveform 2 is for an output with internal conditions such that the output is high except when disabled by the output control.
C. All input pulses are supplied by generators having the following characteristics: PRR ≤ 10 MHz, Z_O = 50 Ω, t_r ≤ 2 ns, t_f ≤ 2 ns.
D. The outputs are measured one at a time with one transition per measurement.
E. t_{PLZ} and t_{PHZ} are the same as t_{dis}.
F. t_{PZL} and t_{PZH} are the same as t_{en}.
G. t_{PLH} and t_{PHL} are the same as t_{pd}.

Figure 2. Load Circuit and Voltage Waveforms

PRODUCT PREVIEW

- **Functionally Equivalent to QS3257**
- **5-Ω Switch Connection Between Two Ports**
- **Isolation Under Power-Off Conditions**
- **Package Options Include Thin Very Small-Outline (DGV), Small-Outline (DW), and Thin Shrink Small-Outline (PW) Packages**

DGV, DW, OR PW PACKAGE
(TOP VIEW)

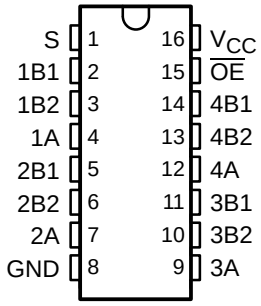

description

The SN74CBTLV3257 is a 4-bit 1-of-2 high-speed FET multiplexer/demultiplexer. The low on-state resistance of the switch allows connections to be made with minimal propagation delay.

The select (S) input controls the data flow. The FET multiplexers/demultiplexers are disabled when the output-enable ($\overline{OE}$) input is high.

To ensure the high-impedance state during power up or power down, $\overline{OE}$ should be tied to V_{CC} through a pullup resistor; the minimum value of the resistor is determined by the current-sinking capability of the driver.

The SN74CBTLV3257 is characterized for operation from –40°C to 85°C.

FUNCTION TABLE

INPUTS		FUNCTION
$\overline{OE}$	S	
L	L	A port = B1 port
L	H	A port = B2 port
H	X	Disconnect

PRODUCT PREVIEW

PRODUCT PREVIEW information concerns products in the formative or design phase of development. Characteristic data and other specifications are design goals. Texas Instruments reserves the right to change or discontinue these products without notice.

Copyright © 1998, Texas Instruments Incorporated

PRODUCT PREVIEW

logic diagram (positive logic)

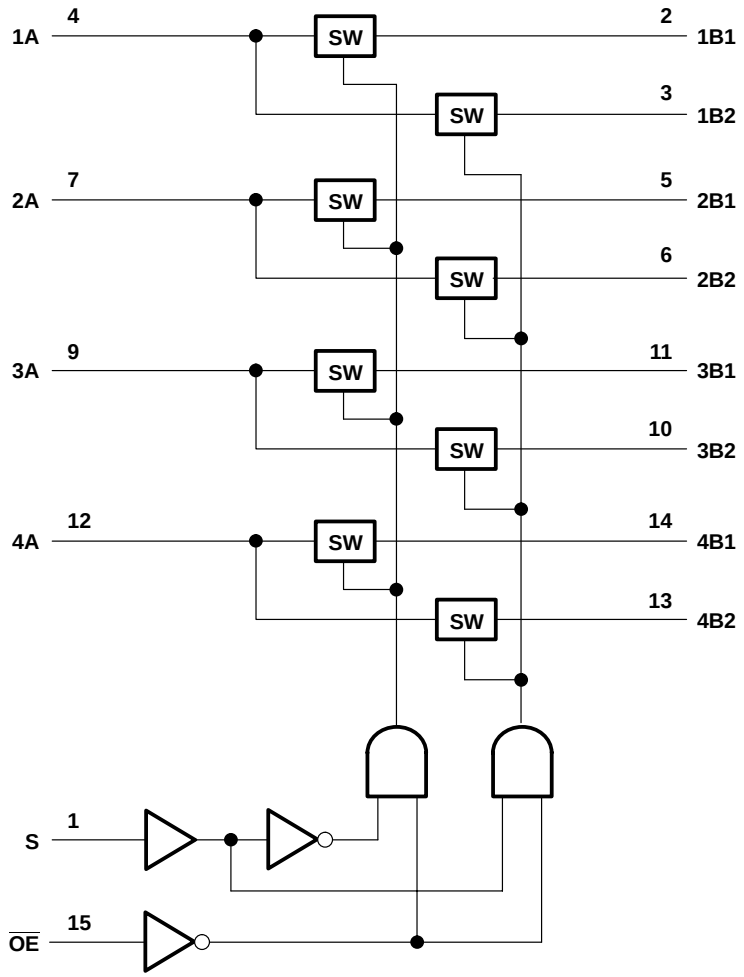

simplified schematic, each FET switch

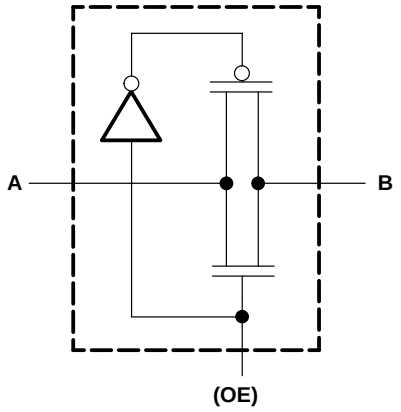

absolute maximum ratings over operating free-air temperature range (unless otherwise noted)†

Supply voltage range, V_{CC} . . . . . –0.5 V to 4.6 V
Input voltage range, V_I (see Note 1) . . . . . –0.5 V to 4.6 V
Continuous channel current . . . . . 128 mA
Input clamp current, I_{IK} ($V_{I/O}$ < 0) . . . . . –50 mA
Package thermal impedance, θ_{JA} (see Note 2): DGV package . . . . . 180°C/W
DW package . . . . . 105°C/W
PW package . . . . . 149°C/W
Storage temperature range, T_{stg} . . . . . –65°C to 150°C

† Stresses beyond those listed under "absolute maximum ratings" may cause permanent damage to the device. These are stress ratings only, and functional operation of the device at these or any other conditions beyond those indicated under "recommended operating conditions" is not implied. Exposure to absolute-maximum-rated conditions for extended periods may affect device reliability.

NOTES: 1. The input and output negative-voltage ratings may be exceeded if the input and output clamp-current ratings are observed.
2. The package thermal impedance is calculated in accordance with JESD 51.

recommended operating conditions (see Note 3)

			MIN	MAX	UNIT
V_{CC}	Supply voltage		2.3	3.6	V
V_{IH}	High-level control input voltage	V_{CC} = 2.3 V to 2.7 V	1.7		V
		V_{CC} = 2.7 V to 3.6 V	2		
V_{IL}	Low-level control input voltage	V_{CC} = 2.3 V to 2.7 V		0.7	V
		V_{CC} = 2.7 V to 3.6 V		0.8	
T_A	Operating free-air temperature		–40	85	°C

NOTE 3: All unused control inputs of the device must be held at V_{CC} or GND to ensure proper device operation. Refer to the TI application report, *Implications of Slow or Floating CMOS Inputs*, literature number SCBA004.

electrical characteristics over recommended operating free-air temperature range (unless otherwise noted)

PARAMETER		TEST CONDITIONS			MIN	TYP‡	MAX	UNIT
V_{IK}		V_{CC} = 3 V,	I_I = –18 mA				–1.2	V
I_I		V_{CC} = 3.6 V,	V_I = V_{CC} or GND				±1	µA
I_{off}		V_{CC} = 0,	V_I or V_O= 0 to 4.5 V				10	µA
I_{CC}		V_{CC} = 3.6 V,	I_O = 0,	V_I = V_{CC} or GND			10	µA
ΔI_{CC}§	Control inputs	V_{CC} = 3.6 V,	One input at 3 V,	Other inputs at V_{CC} or GND			300	µA
C_i	Control inputs	V_I = 3 V or 0						pF
$C_{io(OFF)}$	A port	V_O = 3 V or 0,	$\overline{OE}$ = V_{CC}					pF
	B port							
r_{on}¶		V_{CC} = 2.3 V, TYP at V_{CC} = 2.5 V	V_I = 0	I_I = 64 mA				Ω
				I_I = 24 mA				
			V_I = 1.7 V,	I_I = 15 mA				
		V_{CC} = 3 V	V_I = 0	I_I = 64 mA				
				I_I = 24 mA				
			V_I = 2.4 V,	I_I = 15 mA				

‡ All typical values are at V_{CC} = 3.3 V (unless otherwise noted), T_A = 25°C.
§ This is the increase in supply current for each input that is at the specified voltage level rather than V_{CC} or GND.
¶ Measured by the voltage drop between the A and the B terminals at the indicated current through the switch. On-state resistance is determined by the lower of the voltages of the two (A or B) terminals.

PRODUCT PREVIEW

switching characteristics over recommended operating free-air temperature range (unless otherwise noted) (see Figures 1 and 2)

PARAMETER	FROM (INPUT)	TO (OUTPUT)	V_{CC} = 2.5 V ± 0.2 V		V_{CC} = 3.3 V ± 0.3 V		UNIT
			MIN	MAX	MIN	MAX	
t_{pd}	A or B†	B or A					ns
	S	A or B					
t_{en}	S	A or B					ns
t_{dis}	S	A or B					ns
t_{en}	$\overline{OE}$	A or B					ns
t_{dis}	$\overline{OE}$	A or B					ns

† The propagation delay is the calculated RC time constant of the typical on-state resistance of the switch and the specified load capacitance, when driven by an ideal voltage source (zero output impedance).

PRODUCT PREVIEW

PARAMETER MEASUREMENT INFORMATION
V_{CC} = 2.5 V ± 0.2 V

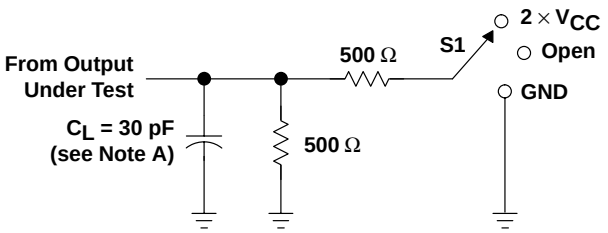

LOAD CIRCUIT

TEST	S1
t_{pd}	Open
t_{PLZ}/t_{PZL}	2 × V_{CC}
t_{PHZ}/t_{PZH}	GND

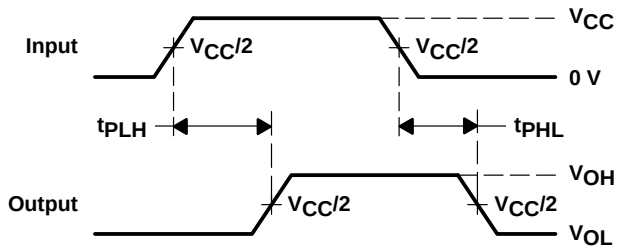

VOLTAGE WAVEFORMS
PROPAGATION DELAY TIMES

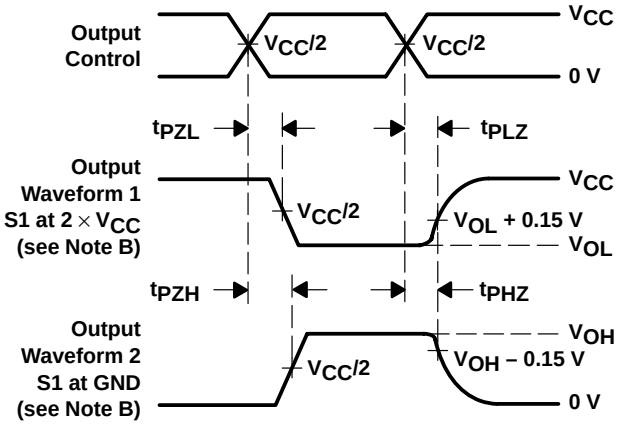

VOLTAGE WAVEFORMS
ENABLE AND DISABLE TIMES

NOTES:
A. C_L includes probe and jig capacitance.
B. Waveform 1 is for an output with internal conditions such that the output is low except when disabled by the output control. Waveform 2 is for an output with internal conditions such that the output is high except when disabled by the output control.
C. All input pulses are supplied by generators having the following characteristics: PRR ≤ 10 MHz, Z_O = 50 Ω, t_r ≤ 2 ns, t_f ≤ 2 ns.
D. The outputs are measured one at a time with one transition per measurement.
E. t_{PLZ} and t_{PHZ} are the same as t_{dis}.
F. t_{PZL} and t_{PZH} are the same as t_{en}.
G. t_{PLH} and t_{PHL} are the same as t_{pd}.

Figure 1. Load Circuit and Voltage Waveforms

PARAMETER MEASUREMENT INFORMATION
V_{CC} = 3.3 V ± 0.3 V

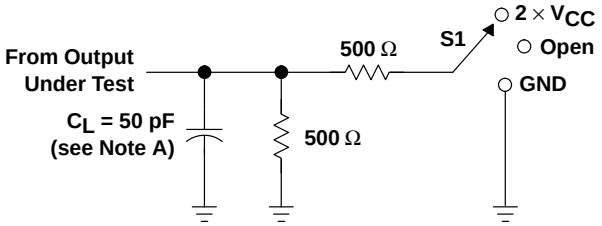

LOAD CIRCUIT

TEST	S1
t_{pd} t_{PLZ}/t_{PZL} t_{PHZ}/t_{PZH}	Open 2 × V_{CC} GND

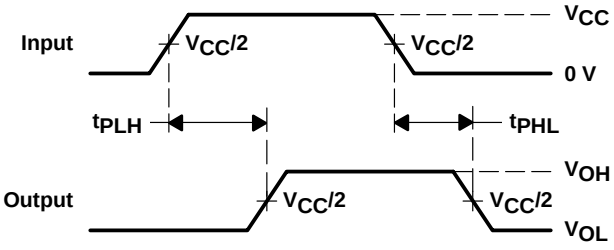

VOLTAGE WAVEFORMS
PROPAGATION DELAY TIMES

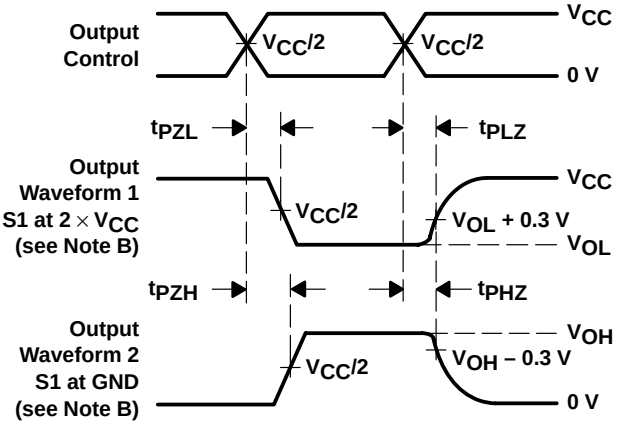

VOLTAGE WAVEFORMS
ENABLE AND DISABLE TIMES

NOTES: A. C_L includes probe and jig capacitance.
B. Waveform 1 is for an output with internal conditions such that the output is low except when disabled by the output control. Waveform 2 is for an output with internal conditions such that the output is high except when disabled by the output control.
C. All input pulses are supplied by generators having the following characteristics: PRR ≤ 10 MHz, Z_O = 50 Ω, t_r ≤ 2 ns, t_f ≤ 2 ns.
D. The outputs are measured one at a time with one transition per measurement.
E. t_{PLZ} and t_{PHZ} are the same as t_{dis}.
F. t_{PZL} and t_{PZH} are the same as t_{en}.
G. t_{PLH} and t_{PHL} are the same as t_{pd}.

Figure 2. Load Circuit and Voltage Waveforms

PRODUCT PREVIEW

- **Functionally Equivalent to QS3383 and QS3L383**
- **5-Ω Switch Connection Between Two Ports**
- **Isolation Under Power-Off Conditions**
- **ESD Protection Exceeds 2000 V Per MIL-STD-883, Method 3015; Exceeds 200 V Using Machine Model (C = 200 pF, R = 0)**
- **Latch-Up Performance Exceeds 250 mA Per JESD 17**
- **Package Options Include Shrink Small-Outline (DBQ), Thin Very Small-Outline (DGV), Small-Outline (DW), and Thin Shrink Small-Outline (PW) Packages**

DBQ, DGV, DW, OR PW PACKAGE
(TOP VIEW)

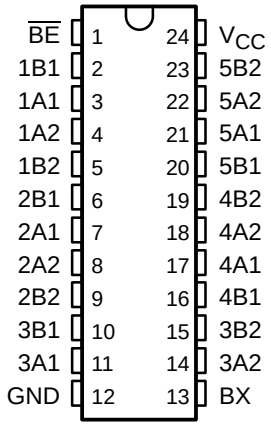

description

The SN74CBTLV3383 provides ten bits of high-speed bus switching or exchanging. The low on-state resistance of the switch allows connections to be made with minimal propagation delay.

The device operates as a 10-bit bus switch or a 5-bit bus exchanger, which provides swapping of the A and B pairs of signals. The bus-exchange function is selected when BX is high and $\overline{BE}$ is low.

The SN74CBTLV3383 is characterized for operation from –40°C to 85°C.

FUNCTION TABLE

INPUTS		INPUTS/OUTPUTS	
$\overline{BE}$	BX	1A1–5A1	1A2–5A2
L	L	1B1–5B1	1B2–5B2
L	H	1B2–5B2	1B1–5B1
H	X	Z	Z

PRODUCTION DATA information is current as of publication date. Products conform to specifications per the terms of Texas Instruments standard warranty. Production processing does not necessarily include testing of all parameters.

Copyright © 1998, Texas Instruments Incorporated

logic diagram (positive logic)

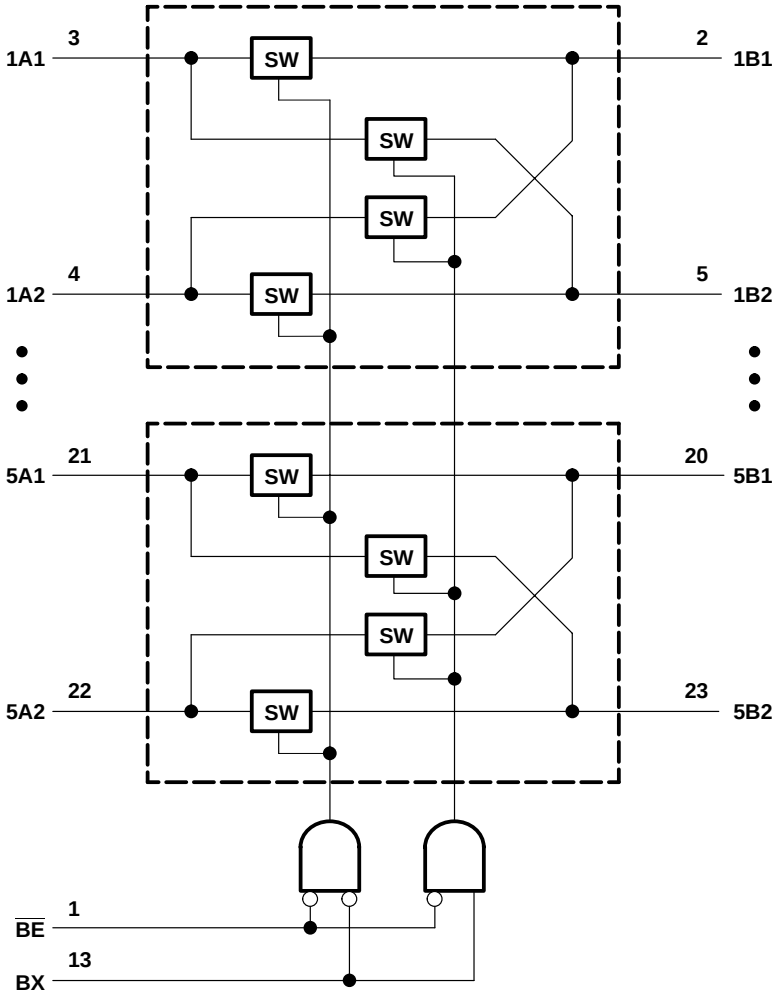

simplified schematic, each FET switch

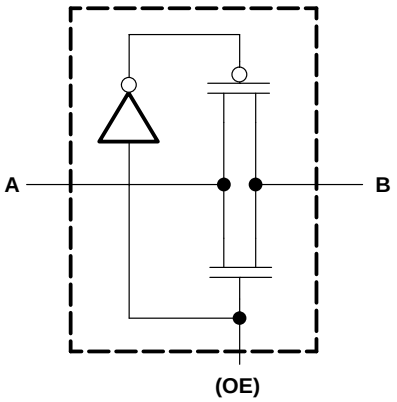

absolute maximum ratings over operating free-air temperature range (unless otherwise noted)†

Supply voltage range, V_{CC} . . . . . –0.5 V to 4.6 V
Input voltage range, V_I (see Note 1) . . . . . –0.5 V to 4.6 V
Continuous channel current . . . . . 128 mA
Input clamp current, I_{IK} ($V_{I/O}$ < 0) . . . . . –50 mA
Package thermal impedance, θ_{JA} (see Note 2): DBQ package . . . . . 103°C/W
DGV package . . . . . 139°C/W
DW package . . . . . 81°C/W
PW package . . . . . 120°C/W
Storage temperature range, T_{stg} . . . . . –65°C to 150°C

† Stresses beyond those listed under "absolute maximum ratings" may cause permanent damage to the device. These are stress ratings only, and functional operation of the device at these or any other conditions beyond those indicated under "recommended operating conditions" is not implied. Exposure to absolute-maximum-rated conditions for extended periods may affect device reliability.

NOTES: 1. The input and output negative-voltage ratings may be exceeded if the input and output clamp-current ratings are observed.
2. The package thermal impedance is calculated in accordance with JESD 51.

recommended operating conditions (see Note 3)

			MIN	MAX	UNIT
V_{CC}	Supply voltage		2.3	3.6	V
V_{IH}	High-level control input voltage	V_{CC} = 2.3 V to 2.7 V	1.7		V
		V_{CC} = 2.7 V to 3.6 V	2		
V_{IL}	Low-level control input voltage	V_{CC} = 2.3 V to 2.7 V		0.7	V
		V_{CC} = 2.7 V to 3.6 V		0.8	
T_A	Operating free-air temperature		–40	85	°C

NOTE 3: All unused control inputs of the device must be held at V_{CC} or GND to ensure proper device operation. Refer to the TI application report, *Implications of Slow or Floating CMOS Inputs*, literature number SCBA004.

electrical characteristics over recommended operating free-air temperature range (unless otherwise noted)

PARAMETER		TEST CONDITIONS			MIN	TYP‡	MAX	UNIT
V_{IK}		V_{CC} = 3 V,	I_I = –18 mA				–1.2	V
I_I		V_{CC} = 3.6 V,	V_I = V_{CC} or GND				±1	µA
I_{off}		V_{CC} = 0,	V_I or V_O= 0 to 3.6 V				10	µA
I_{CC}		V_{CC} = 3.6 V,	I_O = 0,	V_I = V_{CC} or GND			10	µA
ΔI_{CC}§	Control inputs	V_{CC} = 3.6 V,	One input at 3 V,	Other inputs at V_{CC} or GND			300	µA
C_i	Control inputs	V_I = 3 V or 0				3.5		pF
$C_{io(OFF)}$		V_O = 3 V or 0,	$\overline{BE}$ = V_{CC}			13.5		pF
r_{on}¶		V_{CC} = 2.3 V, TYP at V_{CC} = 2.5 V	V_I = 0	I_I = 64 mA		5	8	Ω
				I_I = 24 mA		5	8	
			V_I = 1.7 V,	I_I = 15 mA		27	40	
		V_{CC} = 3 V	V_I = 0	I_I = 64 mA		5	7	
				I_I = 24 mA		5	7	
			V_I = 2.4 V,	I_I = 15 mA		10	15	

‡ All typical values are at V_{CC} = 3.3 V (unless otherwise noted), T_A = 25°C.
§ This is the increase in supply current for each input that is at the specified voltage level rather than V_{CC} or GND.
¶ Measured by the voltage drop between the A and B terminals at the indicated current through the switch. On-state resistance is determined by the lower of the voltages of the two (A or B) terminals.

switching characteristics over recommended operating free-air temperature range (unless otherwise noted) (see Figures 1 and 2)

PARAMETER	FROM (INPUT)	TO (OUTPUT)	V_{CC} = 2.5 V ± 0.2 V		V_{CC} = 3.3 V ± 0.3 V		UNIT
			MIN	MAX	MIN	MAX	
t_{pd}†	A or B	B or A		0.15		0.25	ns
t_{pd}	BX	A or B	1.5	5.8	1.5	4.7	ns
t_{en}	$\overline{BE}$	A or B	1.5	5.3	1.5	4.7	ns
t_{dis}	$\overline{BE}$	A or B	1	6	1	6	ns

† The propagation delay is the calculated RC time constant of the typical on-state resistance of the switch and the specified load capacitance when driven by an ideal voltage source (zero output impedance).

PARAMETER MEASUREMENT INFORMATION
V_{CC} = 2.5 V ± 0.2 V

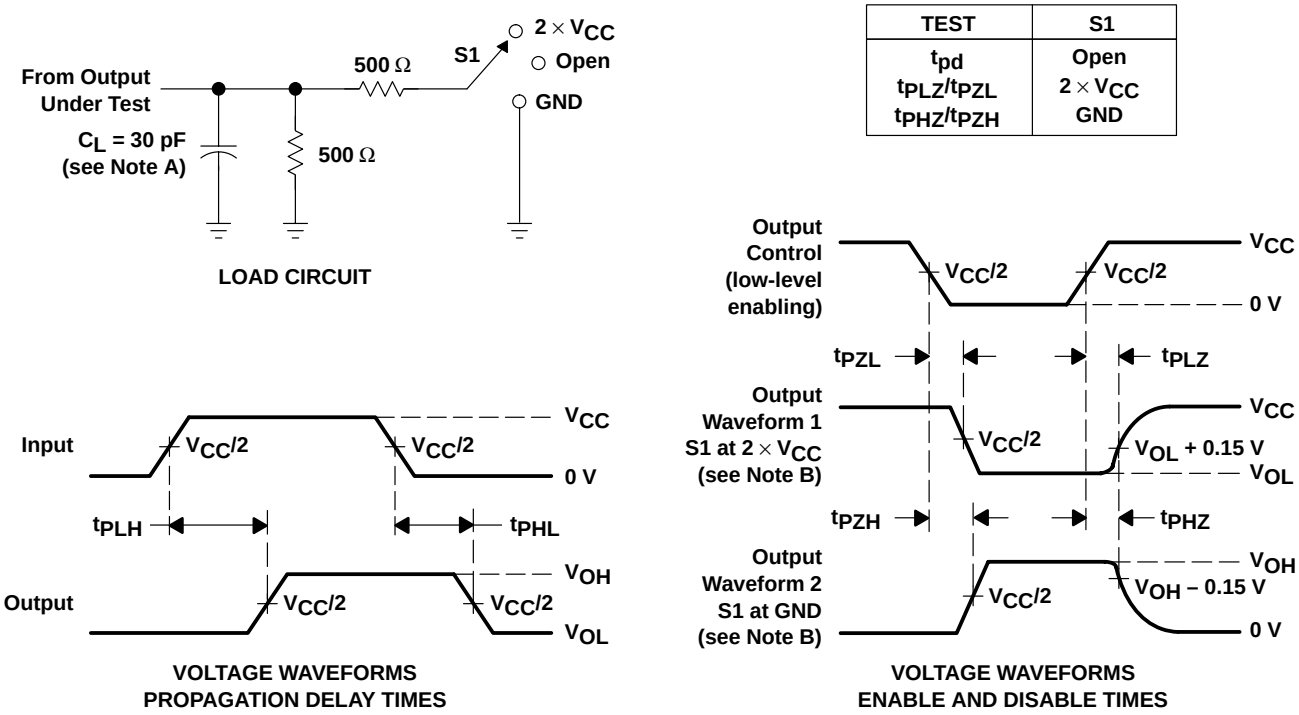

TEST	S1
t_{pd}	Open
t_{PLZ}/t_{PZL}	2 × V_{CC}
t_{PHZ}/t_{PZH}	GND

NOTES:
A. C_L includes probe and jig capacitance.
B. Waveform 1 is for an output with internal conditions such that the output is low except when disabled by the output control. Waveform 2 is for an output with internal conditions such that the output is high except when disabled by the output control.
C. All input pulses are supplied by generators having the following characteristics: PRR ≤ 10 MHz, Z_O = 50 Ω, t_r ≤ 2 ns, t_f ≤ 2 ns.
D. The outputs are measured one at a time with one transition per measurement.
E. t_{PLZ} and t_{PHZ} are the same as t_{dis}.
F. t_{PZL} and t_{PZH} are the same as t_{en}.
G. t_{PLH} and t_{PHL} are the same as t_{pd}.

Figure 1. Load Circuit and Voltage Waveforms

PARAMETER MEASUREMENT INFORMATION
V_{CC} = 3.3 V ± 0.3 V

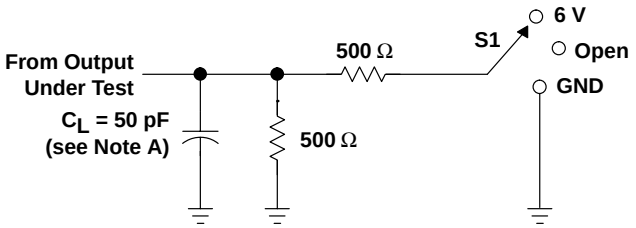

LOAD CIRCUIT

TEST	S1
t_{pd}	Open
t_{PLZ}/t_{PZL}	6 V
t_{PHZ}/t_{PZH}	GND

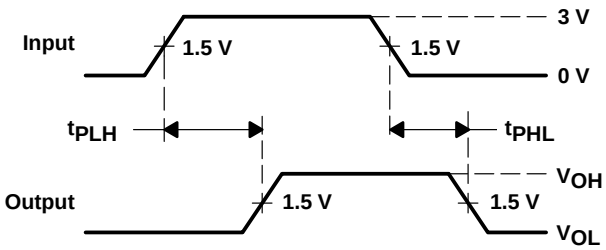

VOLTAGE WAVEFORMS
PROPAGATION DELAY TIMES

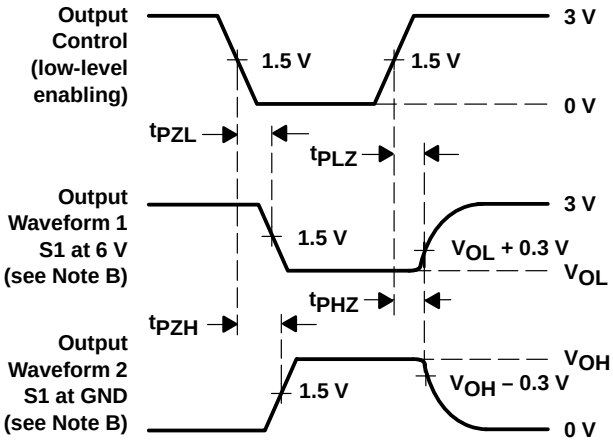

VOLTAGE WAVEFORMS
ENABLE AND DISABLE TIMES

NOTES:
A. C_L includes probe and jig capacitance.
B. Waveform 1 is for an output with internal conditions such that the output is low except when disabled by the output control. Waveform 2 is for an output with internal conditions such that the output is high except when disabled by the output control.
C. All input pulses are supplied by generators having the following characteristics: PRR ≤ 10 MHz, Z_O = 50 Ω, t_r ≤ 2.5 ns, t_f ≤ 2.5 ns.
D. The outputs are measured one at a time with one transition per measurement.
E. t_{PLZ} and t_{PHZ} are the same as t_{dis}.
F. t_{PZL} and t_{PZH} are the same as t_{en}.
G. t_{PLH} and t_{PHL} are the same as t_{pd}.

Figure 2. Load Circuit and Voltage Waveforms

- **Functionally Equivalent to QS3384 and QS3L384**
- **5-Ω Switch Connection Between Two Ports**
- **Isolation Under Power-Off Conditions**
- **ESD Protection Exceeds 2000 V Per MIL-STD-883, Method 3015; Exceeds 200 V Using Machine Model (C = 200 pF, R = 0)**
- **Latch-Up Performance Exceeds 250 mA Per JESD 17**
- **Package Options Include Shrink Small-Outline (DBQ), Thin Very Small-Outline (DGV), Small-Outline (DW), and Thin Shrink Small-Outline (PW) Packages**

DBQ, DGV, DW, OR PW PACKAGE
(TOP VIEW)

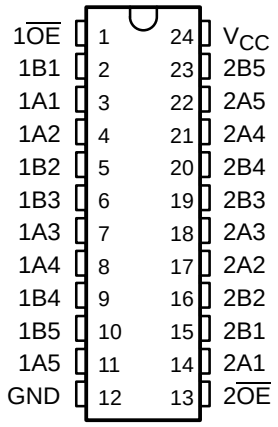

description

The SN74CBTLV3384 provides ten bits of high-speed bus switching. The low on-state resistance of the switch allows connections to be made with minimal propagation delay.

The device is organized as dual 5-bit bus switches with separate output-enable ($\overline{OE}$) inputs. It can be used as two 5-bit bus switches or one 10-bit bus switch. When $\overline{OE}$ is low, the associated 5-bit bus switch is on and port A is connected to port B. When $\overline{OE}$ is high, the switch is open, and a high-impedance state exists between the two ports.

To ensure the high-impedance state during power up or power down, $\overline{OE}$ should be tied to V_{CC} through a pullup resistor; the minimum value of the resistor is determined by the current-sinking capability of the driver.

The SN74CBTLV3384 is characterized for operation from –40°C to 85°C.

FUNCTION TABLE
(each 5-bit bus switch)

INPUTS		INPUTS/OUTPUTS	
$1\overline{OE}$	$2\overline{OE}$	1B1–1B5	2B1–2B5
L	L	1A1–1A5	2A1–2A5
L	H	1A1–1A5	Z
H	L	Z	2A1–2A5
H	H	Z	Z

PRODUCTION DATA information is current as of publication date. Products conform to specifications per the terms of Texas Instruments standard warranty. Production processing does not necessarily include testing of all parameters.

Copyright © 1998, Texas Instruments Incorporated

logic diagram (positive logic)

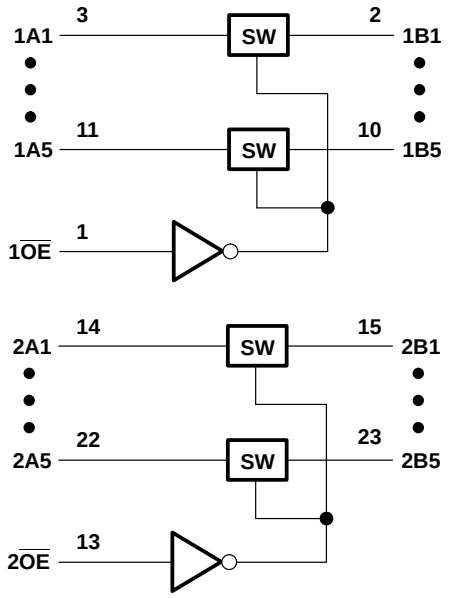

simplified schematic, each FET switch

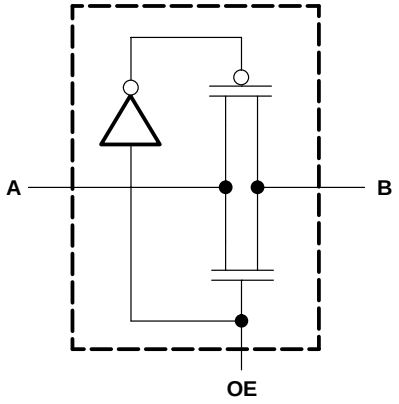

absolute maximum ratings over operating free-air temperature range (unless otherwise noted)†

Supply voltage range, V_{CC}	–0.5 V to 4.6 V
Input voltage range, V_I (see Note 1)	–0.5 V to 4.6 V
Continuous channel current	128 mA
Input clamp current, I_{IK} ($V_{I/O} < 0$)	–50 mA
Package thermal impedance, θ_{JA} (see Note 2): DBQ package	103°C/W
DGV package	139°C/W
DW package	81°C/W
PW package	120°C/W
Storage temperature range, T_{stg}	–65°C to 150°C

† Stresses beyond those listed under “absolute maximum ratings” may cause permanent damage to the device. These are stress ratings only, and functional operation of the device at these or any other conditions beyond those indicated under “recommended operating conditions” is not implied. Exposure to absolute-maximum-rated conditions for extended periods may affect device reliability.

NOTES: 1. The input and output negative-voltage ratings may be exceeded if the input and output clamp-current ratings are observed.
2. The package thermal impedance is calculated in accordance with JESD 51.

recommended operating conditions (see Note 3)

			MIN	MAX	UNIT
V_{CC}	Supply voltage		2.3	3.6	V
V_{IH}	High-level control input voltage	V_{CC} = 2.3 V to 2.7 V	1.7		V
		V_{CC} = 2.7 V to 3.6 V	2		
V_{IL}	Low-level control input voltage	V_{CC} = 2.3 V to 2.7 V		0.7	V
		V_{CC} = 2.7 V to 3.6 V		0.8	
T_A	Operating free-air temperature		–40	85	°C

NOTE 3: All unused control inputs of the device must be held at V_{CC} or GND to ensure proper device operation. Refer to the TI application report, *Implications of Slow or Floating CMOS Inputs*, literature number SCBA004.

electrical characteristics over recommended operating free-air temperature range (unless otherwise noted)

PARAMETER		TEST CONDITIONS			MIN	TYP†	MAX	UNIT
V_{IK}		V_{CC} = 3 V,	I_I = –18 mA				–1.2	V
I_I		V_{CC} = 3.6 V,	V_I = V_{CC} or GND				±1	µA
I_{off}		V_{CC} = 0,	V_I or V_O = 0 to 3.6 V				10	µA
I_{CC}		V_{CC} = 3.6 V,	I_O = 0,	V_I = V_{CC} or GND			10	µA
ΔI_{CC}‡	Control inputs	V_{CC} = 3.6 V,	One input at 3 V,	Other inputs at V_{CC} or GND			300	µA
C_i	Control inputs	V_I = 3 V or 0				4.5		pF
$C_{io(OFF)}$		V_O = 3 V or 0,	$\overline{OE}$ = V_{CC}			10		pF
r_{on}§		V_{CC} = 2.3 V, TYP at V_{CC} = 2.5 V	V_I = 0	I_I = 64 mA		5	8	Ω
				I_I = 24 mA		5	8	
			V_I = 1.7 V,	I_I = 15 mA		27	40	
		V_{CC} = 3 V	V_I = 0	I_I = 64 mA		5	7	
				I_I = 24 mA		5	7	
			V_I = 2.4 V,	I_I = 15 mA		10	15	

† All typical values are at V_{CC} = 3.3 V (unless otherwise noted), T_A = 25°C.
‡ This is the increase in supply current for each input that is at the specified voltage level rather than V_{CC} or GND.
§ Measured by the voltage drop between the A and B terminals at the indicated current through the switch. On-state resistance is determined by the lower of the voltages of the two (A or B) terminals.

switching characteristics over recommended operating free-air temperature range (unless otherwise noted) (see Figures 1 and 2)

PARAMETER	FROM (INPUT)	TO (OUTPUT)	V_{CC} = 2.5 V ± 0.2 V		V_{CC} = 3.3 V ± 0.3 V		UNIT
			MIN	MAX	MIN	MAX	
t_{pd}¶	A or B	B or A		0.35		0.25	ns
t_{en}	$\overline{OE}$	A or B	1	5	1	4.3	ns
t_{dis}	$\overline{OE}$	A or B	1	5.5	1	5.5	ns

¶ The propagation delay is the calculated RC time constant of the typical on-state resistance of the switch and the specified load capacitance, when driven by an ideal voltage source (zero output impedance).

PARAMETER MEASUREMENT INFORMATION
V_{CC} = 2.5 V ± 0.2 V

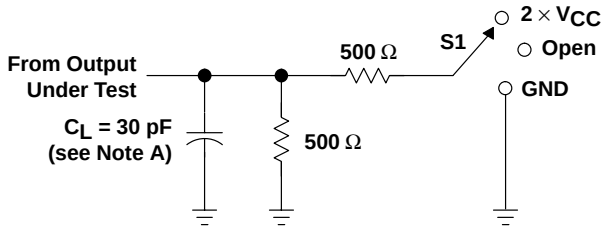

LOAD CIRCUIT

TEST	S1
t_{pd} t_{PLZ}/t_{PZL} t_{PHZ}/t_{PZH}	Open 2 × V_{CC} GND

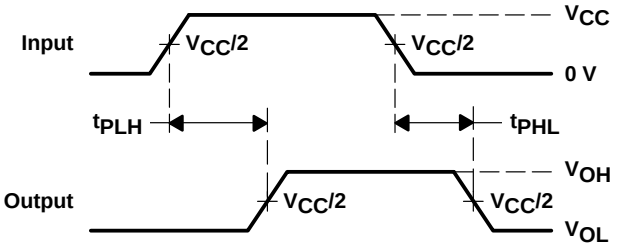

VOLTAGE WAVEFORMS
PROPAGATION DELAY TIMES

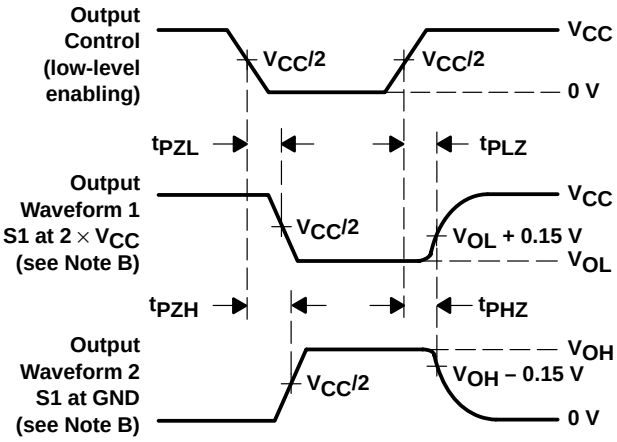

VOLTAGE WAVEFORMS
ENABLE AND DISABLE TIMES

NOTES: A. C_L includes probe and jig capacitance.
B. Waveform 1 is for an output with internal conditions such that the output is low except when disabled by the output control. Waveform 2 is for an output with internal conditions such that the output is high except when disabled by the output control.
C. All input pulses are supplied by generators having the following characteristics: PRR ≤ 10 MHz, Z_O = 50 Ω, t_r ≤ 2 ns, t_f ≤ 2 ns.
D. The outputs are measured one at a time with one transition per measurement.
E. t_{PLZ} and t_{PHZ} are the same as t_{dis}.
F. t_{PZL} and t_{PZH} are the same as t_{en}.
G. t_{PLH} and t_{PHL} are the same as t_{pd}.

Figure 1. Load Circuit and Voltage Waveforms

PARAMETER MEASUREMENT INFORMATION
V_{CC} = 3.3 V ± 0.3 V

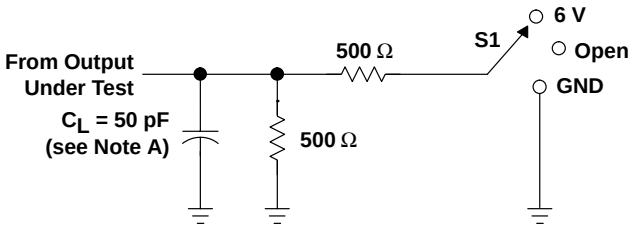

LOAD CIRCUIT

TEST	S1
t_{pd}	Open
t_{PLZ}/t_{PZL}	6 V
t_{PHZ}/t_{PZH}	GND

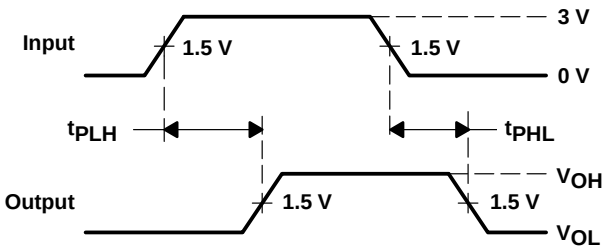

VOLTAGE WAVEFORMS
PROPAGATION DELAY TIMES

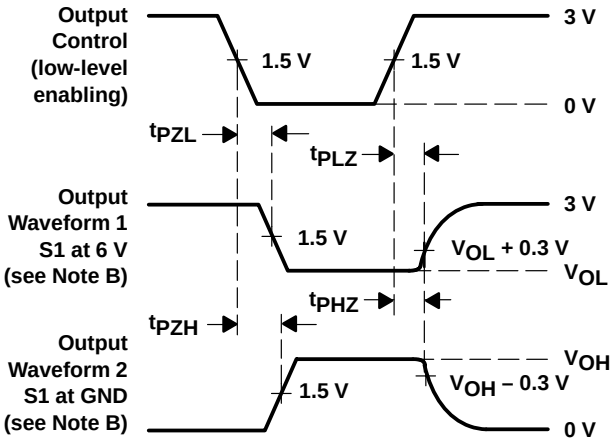

VOLTAGE WAVEFORMS
ENABLE AND DISABLE TIMES

NOTES: A. C_L includes probe and jig capacitance.
B. Waveform 1 is for an output with internal conditions such that the output is low except when disabled by the output control. Waveform 2 is for an output with internal conditions such that the output is high except when disabled by the output control.
C. All input pulses are supplied by generators having the following characteristics: PRR ≤ 10 MHz, Z_O = 50 Ω, t_r ≤ 2.5 ns, t_f ≤ 2.5 ns.
D. The outputs are measured one at a time with one transition per measurement.
E. t_{PLZ} and t_{PHZ} are the same as t_{dis}.
F. t_{PZL} and t_{PZH} are the same as t_{en}.
G. t_{PLH} and t_{PHL} are the same as t_{pd}.

Figure 2. Load Circuit and Voltage Waveforms

- **Enable Signal Is SSTL_2 Compatible**
- **Flow-Through Architecture Optimizes PCB Layout**
- **Designed to Be Used With 200 Mbit/s Double Data Rate (DDR) SDRAM Applications**
- **Switch On-State Resistance Is Designed to Eliminate the Series Resistor to the DDR SDRAM**
- **Internal 10-kΩ Pulldown Resistors to Ground on the B Port**
- **Internal 50-kΩ Pullup Resistor on the Output-Enable Input**
- **Package Options Include Shrink Small-Outline (DBQ), Thin Very Small-Outline (DGV), Small-Outline (DW), and Thin Shrink Small-Outline (PW) Packages**

DBQ, DGV, DW, OR PW PACKAGE
(TOP VIEW)

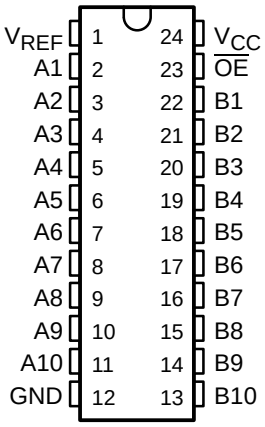

description

This 10-bit FET bus switch is designed for 3-V to 3.6-V V_{CC} operation and SSTL_2 output-enable ($\overline{OE}$) input levels.

When $\overline{OE}$ is low, the 10-bit bus switch is on and port A is connected to port B. When $\overline{OE}$ is high, the switch is open, and a high-impedance state exists between the two ports.

The FET switch on-state resistance is designed to replace the series terminating resistor in the SSTL_2 data path.

The CBTLV3857 is characterized for operation from –40°C to 85°C.

FUNCTION TABLE

INPUT $\overline{OE}$	FUNCTION
L	A port = B port
H	Disconnect

PRODUCT PREVIEW

PRODUCT PREVIEW information concerns products in the formative or design phase of development. Characteristic data and other specifications are design goals. Texas Instruments reserves the right to change or discontinue these products without notice.

Copyright © 1998, Texas Instruments Incorporated

PRODUCT PREVIEW

logic diagram (positive logic)

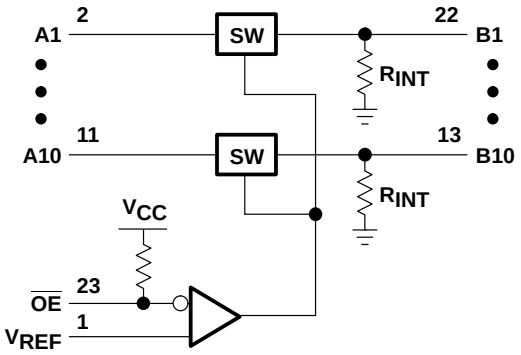

simplified schematic, each FET switch

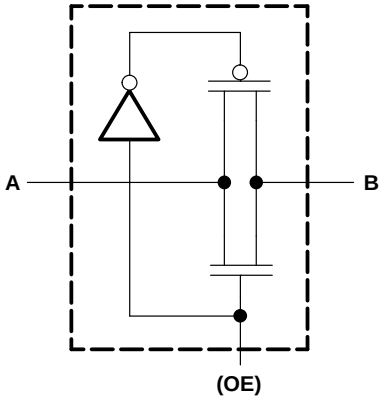

absolute maximum ratings over operating free-air temperature range (unless otherwise noted)†

Supply voltage range, V_{CC}		–0.5 V to 4.6 V
Input voltage range ($\overline{OE}$ only), V_I (see Note 1)		–0.5 V to V_{CC} + 0.5 V
Input voltage range (except $\overline{OE}$), V_I (see Note 1)		–0.5 V to 4.6 V
Continuous channel current		48 mA
Input clamp current, I_{IK} ($V_{I/O}$ < 0)		–50 mA
Package thermal impedance, θ_{JA} (see Note 2):	DBQ package	103°C/W
	DGV package	139°C/W
	DW package	81°C/W
	PW package	120°C/W
Storage temperature range, T_{stg}		–65°C to 150°C

† Stresses beyond those listed under “absolute maximum ratings” may cause permanent damage to the device. These are stress ratings only, and functional operation of the device at these or any other conditions beyond those indicated under “recommended operating conditions” is not implied. Exposure to absolute-maximum-rated conditions for extended periods may affect device reliability.

NOTES: 1. The input and output negative-voltage ratings may be exceeded if the input and output current ratings are observed.
2. The package thermal impedance is calculated in accordance with JESD 51.

recommended operating conditions (see Note 3)

		MIN	NOM	MAX	UNIT
V_{CC}	Supply voltage	3	3.3	3.6	V
V_{REF}	Reference voltage ($0.38 \times V_{CC}$)	1.15	1.25	1.35	V
V_{IH}	AC high-level control input voltage	V_{REF} + 350 mV			V
V_{IL}	AC low-level control input voltage			V_{REF} – 350 mV	V
V_{IH}	DC high-level control input voltage	V_{REF} + 180 mV			V
V_{IL}	DC low-level control input voltage			V_{REF} – 180 mV	V
T_A	Operating free-air temperature	–40		85	°C

NOTE 3: All unused control inputs of the device must be held at V_{CC} or GND to ensure proper device operation. Refer to the TI application report, *Implications of Slow or Floating CMOS Inputs*, literature number SCBA004.

electrical characteristics over recommended operating free-air temperature range (unless otherwise noted)

PARAMETER		TEST CONDITIONS			MIN	TYP†	MAX	UNIT
V_{IK}		V_{CC} = 3 V,	I_I = –18 mA				–1.2	V
I_I	$\overline{OE}$	V_{CC} = 3.6 V,	$V_I = V_{CC}$ or GND				±1	mA
	A port						±5	µA
	B port						±1	mA
	V_{REF}						±5	µA
I_{CC}		V_{CC} = 3.6 V,	I_O = 0,	$V_I = V_{CC}$ or GND				mA
C_i	Control inputs	V_I = 3 V or 0						pF
$C_{io(OFF)}$		V_O = 3 V or 0,	$\overline{OE} = V_{CC}$					pF
r_{on}‡		V_{CC} = 3 V	V_I = 0,	I_I = 24 mA				Ω
			V_I = 0.9 V,	I_I = 24 mA				
			V_I = 1.25 V,	I_I = 24 mA				
			V_I = 1.6 V,	I_I = 24 mA				
r_{off}		V_{CC} = 0						MΩ
		V_{CC} = 3 V to 3.6 V,	V_I = 1.65 V					

† All typical values are at V_{CC} = 3.3 V, T_A = 25°C.
‡ Measured by the voltage drop between the A and B terminals at the indicated current through the switch. On-state resistance is determined by the lower of the voltages of the two (A or B) terminals.

switching characteristics over recommended operating free-air temperature range (unless otherwise noted) (see Figure 1)

PARAMETER	FROM (INPUT)	TO (OUTPUT)	V_{CC} = 3.3 V ± 0.3 V		UNIT
			MIN	MAX	
t_{pd}§	A or B	B or A			ns
t_{en}	$\overline{OE}$	A or B			ns
t_{dis}	$\overline{OE}$	A or B			ns

§ The propagation delay is the calculated RC time constant of the typical on-state resistance of the switch and the specified load capacitance when driven by an ideal voltage source (zero output impedance).

PRODUCT PREVIEW

PRODUCT PREVIEW

PARAMETER MEASUREMENT INFORMATION
V_{CC} = 3.3 V ± 0.3 V AND V_{DDQ} = 2.5 ± 0.2 V

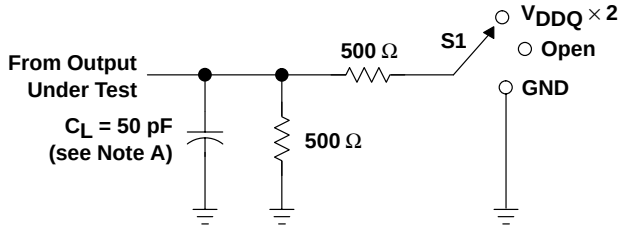

LOAD CIRCUIT

TEST	S1
t_{pd}	Open
t_{PLZ}/t_{PZL}	$V_{DDQ} \times 2$
t_{PHZ}/t_{PZH}	GND

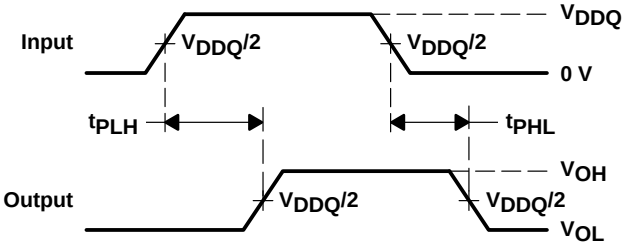

VOLTAGE WAVEFORMS
PROPAGATION DELAY TIMES

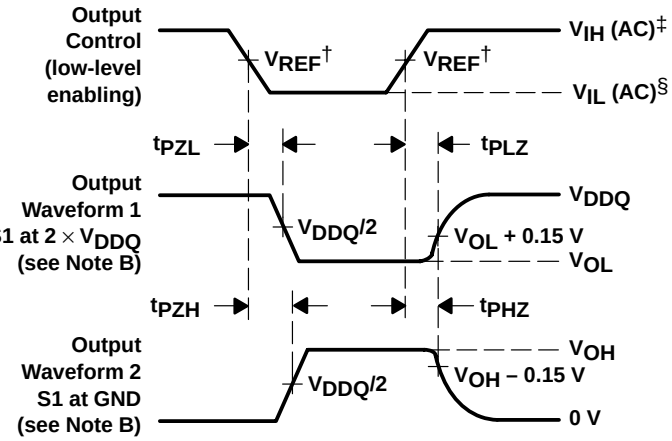

VOLTAGE WAVEFORMS
ENABLE AND DISABLE TIMES

† $V_{REF} = 0.38 \times V_{CC}$
‡ $V_{IH}(AC) = V_{REF} + 350$ mV
§ $V_{IL}(AC) = V_{REF} - 350$ mV

NOTES:
A. C_L includes probe and jig capacitance.
B. Waveform 1 is for an output with internal conditions such that the output is low except when disabled by the output control. Waveform 2 is for an output with internal conditions such that the output is high except when disabled by the output control.
C. All input pulses are supplied by generators having the following characteristics: PRR ≤ 10 MHz, Z_O = 50 Ω, t_r ≤ 1.25 ns/V, t_f ≤ 1.25 ns/V.
D. The outputs are measured one at a time with one transition per measurement.
E. t_{PLZ} and t_{PHZ} are the same as t_{dis}.
F. t_{PZL} and t_{PZH} are the same as t_{en}.
G. t_{PLH} and t_{PHL} are the same as t_{pd}.

Figure 1. Load Circuit and Voltage Waveforms

- **Functionally Equivalent to QS3861**
- **5-Ω Switch Connection Between Two Ports**
- **Isolation Under Power-Off Conditions**
- **Flow-Through Architecture Optimizes PCB Layout**
- **Package Options Include Thin Very Small-Outline (DGV), Small-Outline (DW), and Thin Shrink Small-Outline (PW) Packages**

DGV, DW, OR PW PACKAGE
(TOP VIEW)

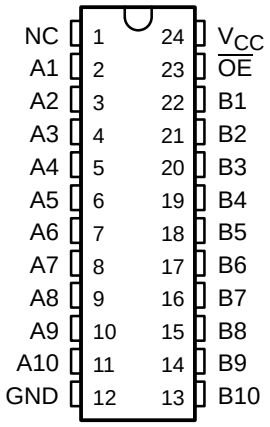

NC – No internal connection

description

The SN74CBTLV3861 provides ten bits of high-speed bus switching. The low on-state resistance of the switch allows connections to be made with minimal propagation delay.

The device is organized as one 10-bit bus switch. When output enable ($\overline{OE}$) is low, the 10-bit bus switch is on and port A is connected to port B. When $\overline{OE}$ is high, the switch is open and a high-impedance state exists between the two ports.

To ensure the high-impedance state during power up or power down, $\overline{OE}$ should be tied to V_{CC} through a pullup resistor; the minimum value of the resistor is determined by the current-sinking capability of the driver.

The SN74CBTLV3861 is characterized for operation from –40°C to 85°C.

FUNCTION TABLE

INPUT $\overline{OE}$	FUNCTION
L	A port = B port
H	Disconnect

PRODUCT PREVIEW

PRODUCT PREVIEW information concerns products in the formative or design phase of development. Characteristic data and other specifications are design goals. Texas Instruments reserves the right to change or discontinue these products without notice.

Copyright © 1998, Texas Instruments Incorporated

PRODUCT PREVIEW

logic diagram (positive logic)

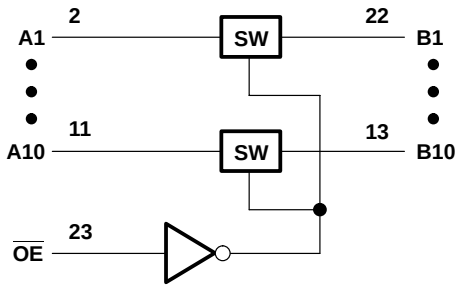

simplified schematic, each FET switch

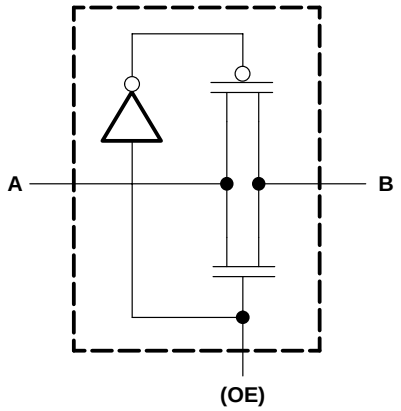

absolute maximum ratings over operating free-air temperature range (unless otherwise noted)†

Supply voltage range, V_{CC}		–0.5 V to 4.6 V
Input voltage range, V_I (see Note 1)		–0.5 V to 4.6 V
Continuous channel current		128 mA
Input clamp current, I_{IK} ($V_{I/O} < 0$)		–50 mA
Package thermal impedance, θ_{JA} (see Note 2):	DGV package	139°C/W
	DW package	81°C/W
	PW package	120°C/W
Storage temperature range, T_{stg}		–65°C to 150°C

† Stresses beyond those listed under “absolute maximum ratings” may cause permanent damage to the device. These are stress ratings only, and functional operation of the device at these or any other conditions beyond those indicated under “recommended operating conditions” is not implied. Exposure to absolute-maximum-rated conditions for extended periods may affect device reliability.

NOTES: 1. The input and output negative-voltage ratings may be exceeded if the input and output clamp-current ratings are observed.
2. The package thermal impedance is calculated in accordance with JESD 51.

recommended operating conditions (see Note 3)

			MIN	MAX	UNIT
V_{CC}	Supply voltage		2.3	3.6	V
V_{IH}	High-level control input voltage	V_{CC} = 2.3 V to 2.7 V	1.7		V
		V_{CC} = 2.7 V to 3.6 V	2		
V_{IL}	Low-level control input voltage	V_{CC} = 2.3 V to 2.7 V		0.7	V
		V_{CC} = 2.7 V to 3.6 V		0.8	
T_A	Operating free-air temperature		–40	85	°C

NOTE 3: All unused control inputs of the device must be held at V_{CC} or GND to ensure proper device operation. Refer to the TI application report, *Implications of Slow or Floating CMOS Inputs*, literature number SCBA004.

electrical characteristics over recommended operating free-air temperature range (unless otherwise noted)

PARAMETER		TEST CONDITIONS			MIN	TYP†	MAX	UNIT
V_{IK}		V_{CC} = 3 V,	I_I = –18 mA				–1.2	V
I_I		V_{CC} = 3.6 V,	V_I = V_{CC} or GND				±1	µA
I_{off}		V_{CC} = 0,	V_I or V_O= 0 to 3.6 V				10	µA
I_{CC}		V_{CC} = 3.6 V,	I_O = 0,	V_I = V_{CC} or GND			10	µA
ΔI_{CC}‡	Control inputs	V_{CC} = 3.6 V,	One input at 3 V,	Other inputs at V_{CC} or GND			300	µA
C_i	Control inputs	V_I = 3 V or 0						pF
$C_{io(OFF)}$		V_O = 3 V or 0,	$\overline{OE}$ = V_{CC}					pF
r_{on}§		V_{CC} = 2.3 V, TYP at V_{CC} = 2.5 V	V_I = 0	I_I = 64 mA				Ω
				I_I = 24 mA				
			V_I = 1.7 V,	I_I = 15 mA				
		V_{CC} = 3 V	V_I = 0	I_I = 64 mA				
				I_I = 24 mA				
			V_I = 2.4 V,	I_I = 15 mA				

† All typical values are at V_{CC} = 3.3 V (unless otherwise noted), T_A = 25°C.
‡ This is the increase in supply current for each input that is at the specified voltage level rather than V_{CC} or GND.
§ Measured by the voltage drop between the A and B terminals at the indicated current through the switch. On-state resistance is determined by the lower of the voltages of the two (A or B) terminals.

PRODUCT PREVIEW

switching characteristics over recommended operating free-air temperature range (unless otherwise noted) (see Figures 1 and 2)

PARAMETER	FROM (INPUT)	TO (OUTPUT)	V_{CC} = 2.5 V ± 0.2 V		V_{CC} = 3.3 V ± 0.3 V		UNIT
			MIN	MAX	MIN	MAX	
t_{pd}¶	A or B	B or A					ns
t_{en}	$\overline{OE}$	A or B					ns
t_{dis}	$\overline{OE}$	A or B					ns

¶ The propagation delay is the calculated RC time constant of the typical on-state resistance of the switch and the specified load capacitance, when driven by an ideal voltage source (zero output impedance).

PRODUCT PREVIEW

PARAMETER MEASUREMENT INFORMATION
V_{CC} = 2.5 V ± 0.2 V

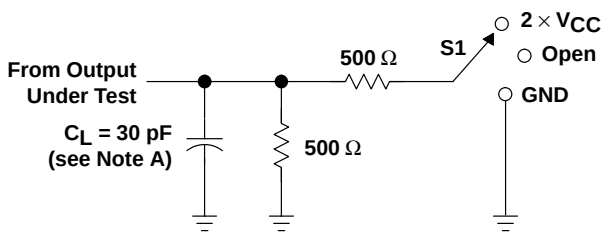

LOAD CIRCUIT

TEST	S1
t_{pd} t_{PLZ}/t_{PZL} t_{PHZ}/t_{PZH}	Open 2 × V_{CC} GND

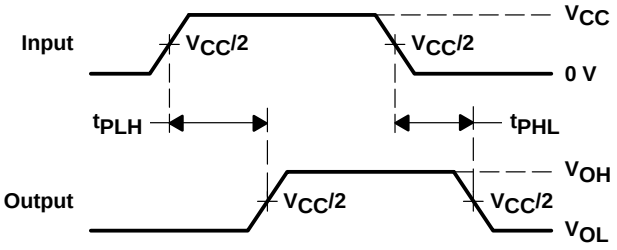

VOLTAGE WAVEFORMS
PROPAGATION DELAY TIMES

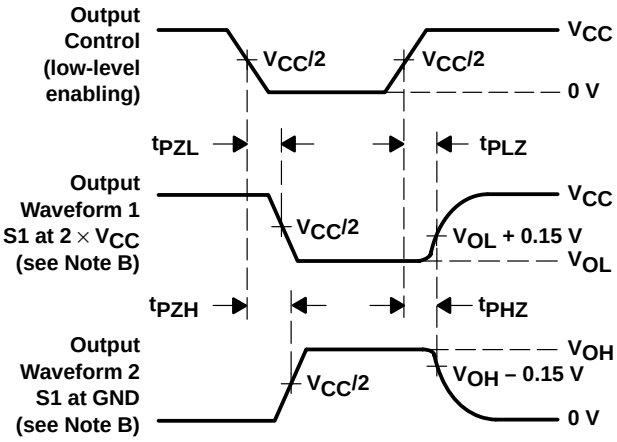

VOLTAGE WAVEFORMS
ENABLE AND DISABLE TIMES

NOTES: A. C_L includes probe and jig capacitance.
B. Waveform 1 is for an output with internal conditions such that the output is low except when disabled by the output control. Waveform 2 is for an output with internal conditions such that the output is high except when disabled by the output control.
C. All input pulses are supplied by generators having the following characteristics: PRR ≤ 10 MHz, Z_O = 50 Ω, t_r ≤ 2 ns, t_f ≤ 2 ns.
D. The outputs are measured one at a time with one transition per measurement.
E. t_{PLZ} and t_{PHZ} are the same as t_{dis}.
F. t_{PZL} and t_{PZH} are the same as t_{en}.
G. t_{PLH} and t_{PHL} are the same as t_{pd}.

Figure 1. Load Circuit and Voltage Waveforms

PARAMETER MEASUREMENT INFORMATION
V_{CC} = 3.3 V ± 0.3 V

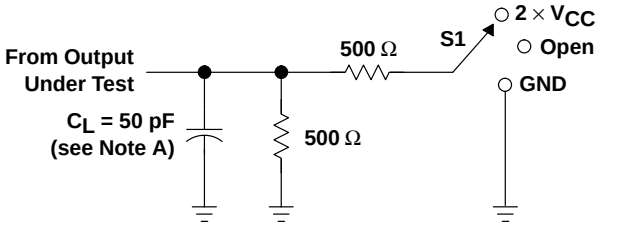

LOAD CIRCUIT

TEST	S1
t_{pd} t_{PLZ}/t_{PZL} t_{PHZ}/t_{PZH}	Open 2 × V_{CC} GND

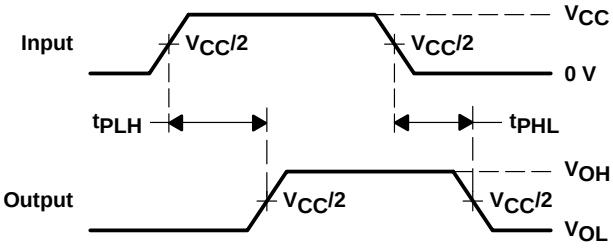

VOLTAGE WAVEFORMS
PROPAGATION DELAY TIMES

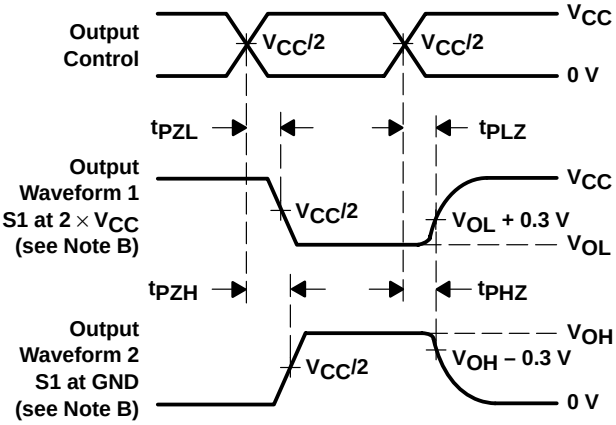

VOLTAGE WAVEFORMS
ENABLE AND DISABLE TIMES

NOTES: A. C_L includes probe and jig capacitance.
B. Waveform 1 is for an output with internal conditions such that the output is low except when disabled by the output control. Waveform 2 is for an output with internal conditions such that the output is high except when disabled by the output control.
C. All input pulses are supplied by generators having the following characteristics: PRR ≤ 10 MHz, Z_O = 50 Ω, t_r ≤ 2 ns, t_f ≤ 2 ns.
D. The outputs are measured one at a time with one transition per measurement.
E. t_{PLZ} and t_{PHZ} are the same as t_{dis}.
F. t_{PZL} and t_{PZH} are the same as t_{en}.
G. t_{PLH} and t_{PHL} are the same as t_{pd}.

Figure 2. Load Circuit and Voltage Waveforms

PRODUCT PREVIEW

General Information 1
CBT Single Gates 2
CBT (2 to 10 Bit) 3
CBT Widebus™ 4
CBT With Integrated Diodes 5
CBTLV Single Gates 6
CBTLV (2 to 10 Bit) 7
CBTLV Widebus™ 8
Application Reports 9
Mechanical Data 10

Contents

		Page
SN74CBTLV16210	Low-Voltage 20-Bit FET Bus Switch	8–3
SN74CBTLV16211	Low-Voltage 24-Bit FET Bus Switch	8–9
SN74CBTLV16212	Low-Voltage 24-Bit FET Bus-Exchange Switch	8–15
SN74CBTLV16235	Low-Voltage 18-Bit 1-of-2 FET Multiplexer/Demultiplexer	8–21
SN74CBTLV16292	Low-Voltage 12-Bit 1-of-2 FET Multiplexer/Demultiplexer With Internal Pulldown Resistors	8–27
SN74CBTLV162292	Low-Voltage 12-Bit 1-of-2 FET Multiplexer/Demultiplexer With Internal Pulldown Resistors	8–33
SN74CBTLV16800	Low-Voltage 20-Bit FET Bus Switch With Precharged Outputs	8–39

- **5-Ω Switch Connection Between Two Ports**
- **Isolation Under Power-Off Conditions**
- **Package Options Include Plastic Thin Shrink Small-Outline (DGG), Thin Very Small-Outline (DGV), and 300-mil Shrink Small-Outline (DL) Packages**

DGG, DGV, OR DL PACKAGE
(TOP VIEW)

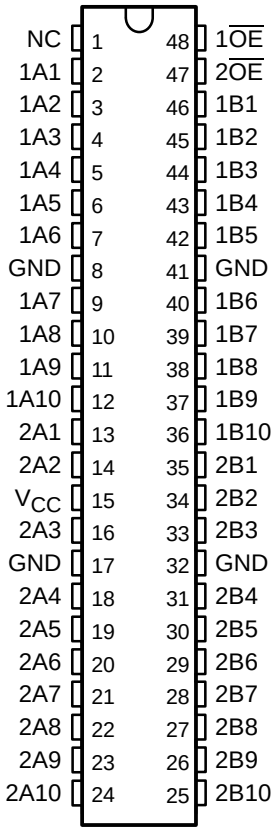

NC – No internal connection

description

The SN74CBTLV16210 provides 20 bits of high-speed bus switching. The low on-state resistance of the switch allows connections to be made with minimal propagation delay.

The device is organized as dual 10-bit bus switches with separate output-enable ($\overline{OE}$) inputs. It can be used as two 10-bit bus switches or one 20-bit bus switch. When $\overline{OE}$ is low, the associated 10-bit bus switch is on and port A is connected to port B. When $\overline{OE}$ is high, the switch is open, and a high-impedance state exists between the two ports.

To ensure the high-impedance state during power up or power down, $\overline{OE}$ should be tied to V_{CC} through a pullup resistor; the minimum value of the resistor is determined by the current-sinking capability of the driver.

The SN74CBTLV16210 is characterized for operation from –40°C to 85°C.

FUNCTION TABLE
(each 10-bit bus switch)

INPUT $\overline{OE}$	FUNCTION
L	A port = B port
H	Disconnect

PRODUCT PREVIEW

PRODUCT PREVIEW information concerns products in the formative or design phase of development. Characteristic data and other specifications are design goals. Texas Instruments reserves the right to change or discontinue these products without notice.

Copyright © 1998, Texas Instruments Incorporated

PRODUCT PREVIEW

logic diagram (positive logic)

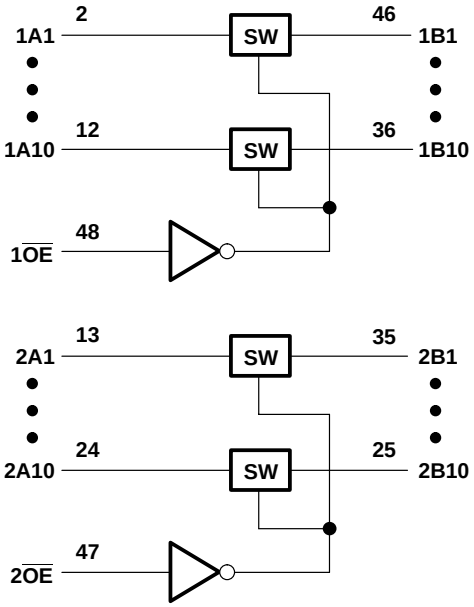

simplified schematic, each FET switch

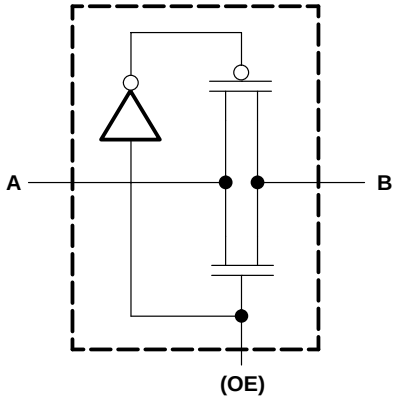

absolute maximum ratings over operating free-air temperature range (unless otherwise noted)†

Supply voltage range, V_{CC}	–0.5 V to 4.6 V
Input voltage range, V_I (see Note 1)	–0.5 V to 4.6 V
Continuous channel current	128 mA
Input clamp current, I_{IK} ($V_I < 0$)	–50 mA
Package thermal impedance, θ_{JA} (see Note 2): DGG package	89°C/W
DGV package	93°C/W
DL package	94°C/W
Storage temperature range, T_{stg}	–65°C to 150°C

† Stresses beyond those listed under “absolute maximum ratings” may cause permanent damage to the device. These are stress ratings only, and functional operation of the device at these or any other conditions beyond those indicated under “recommended operating conditions” is not implied. Exposure to absolute-maximum-rated conditions for extended periods may affect device reliability.

NOTES: 1. The input and output negative-voltage ratings may be exceeded if the input and output clamp-current ratings are observed.
2. The package thermal impedance is calculated in accordance with JESD 51.

recommended operating conditions (see Note 3)

			MIN	MAX	UNIT
V_{CC}	Supply voltage		2.3	3.6	V
V_{IH}	High-level control input voltage	V_{CC} = 2.3 V to 2.7 V	1.7		V
		V_{CC} = 2.7 V to 3.6 V	2		
V_{IL}	Low-level control input voltage	V_{CC} = 2.3 V to 2.7 V		0.7	V
		V_{CC} = 2.7 V to 3.6 V		0.8	
T_A	Operating free-air temperature		–40	85	°C

NOTE 3: All unused control inputs of the device must be held at V_{CC} or GND to ensure proper device operation. Refer to the TI application report, *Implications of Slow or Floating CMOS Inputs*, literature number SCBA004.

electrical characteristics over recommended operating free-air temperature range (unless otherwise noted)

PARAMETER		TEST CONDITIONS			MIN	TYP†	MAX	UNIT
V_{IK}		V_{CC} = 3 V,	I_I = –18 mA				–1.2	V
I_I		V_{CC} = 3.6 V,	V_I = V_{CC} or GND				±1	µA
I_{off}		V_{CC} = 0,	V_I or V_O= 0 to 3.6 V				10	µA
I_{CC}		V_{CC} = 3.6 V,	I_O = 0,	V_I = V_{CC} or GND			10	µA
ΔI_{CC}‡	Control inputs	V_{CC} = 3.6 V,	One input at 3 V,	Other inputs at V_{CC} or GND			300	µA
C_i	Control inputs	V_I = 3 V or 0						pF
$C_{io(OFF)}$		V_O = 3 V or 0,	$\overline{OE}$ = V_{CC}					pF
r_{on}§		V_{CC} = 2.3 V, TYP at V_{CC} = 2.5 V	V_I = 0	I_I = 64 mA				Ω
				I_I = 24 mA				
			V_I = 1.7 V,	I_I = 15 mA				
		V_{CC} = 3 V	V_I = 0	I_I = 64 mA				
				I_I = 24 mA				
			V_I = 2.4 V,	I_I = 15 mA				

† All typical values are at V_{CC} = 3.3 V (unless otherwise noted), T_A = 25°C.
‡ This is the increase in supply current for each input that is at the specified voltage level rather than V_{CC} or GND.
§ Measured by the voltage drop between the A and B terminals at the indicated current through the switch. On-state resistance is determined by the lower of the voltages of the two (A or B) terminals.

PRODUCT PREVIEW

switching characteristics over recommended operating free-air temperature range (unless otherwise noted) (see Figures 1 and 2)

PARAMETER	FROM (INPUT)	TO (OUTPUT)	V_{CC} = 2.5 V ± 0.2 V		V_{CC} = 3.3 V ± 0.3 V		UNIT
			MIN	MAX	MIN	MAX	
t_{pd}¶	A or B	B or A					ns
t_{en}	$\overline{OE}$	A or B					ns
t_{dis}	$\overline{OE}$	A or B					ns

¶ The propagation delay is the calculated RC time constant of the typical on-state resistance of the switch and the specified load capacitance, when driven by an ideal voltage source (zero output impedance).

PRODUCT PREVIEW

PARAMETER MEASUREMENT INFORMATION
V_{CC} = 2.5 V ± 0.2 V

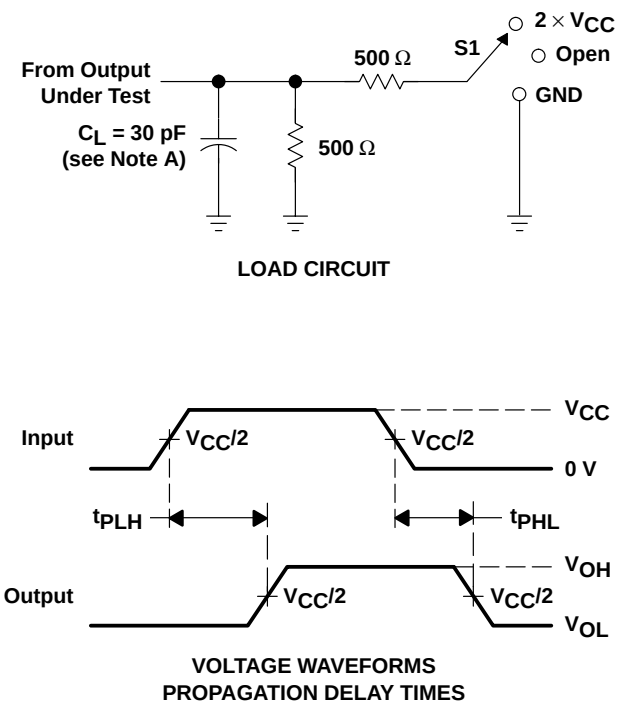

TEST	S1
t_{pd}	Open
t_{PLZ}/t_{PZL}	2 × V_{CC}
t_{PHZ}/t_{PZH}	GND

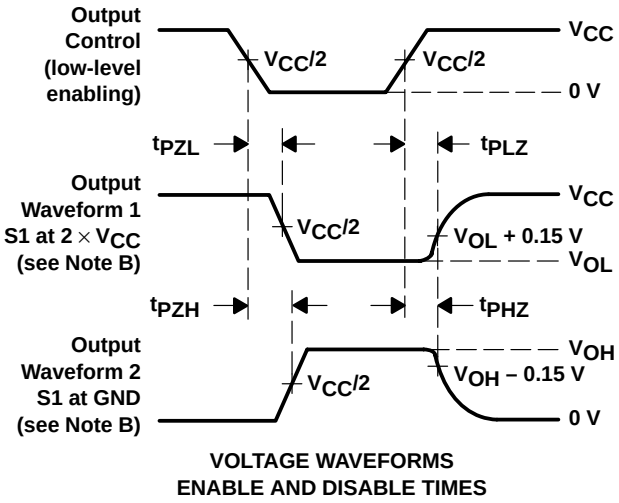

NOTES: A. C_L includes probe and jig capacitance.
B. Waveform 1 is for an output with internal conditions such that the output is low except when disabled by the output control. Waveform 2 is for an output with internal conditions such that the output is high except when disabled by the output control.
C. All input pulses are supplied by generators having the following characteristics: PRR ≤ 10 MHz, Z_O = 50 Ω, t_r ≤ 2 ns, t_f ≤ 2 ns.
D. The outputs are measured one at a time with one transition per measurement.
E. t_{PLZ} and t_{PHZ} are the same as t_{dis}.
F. t_{PZL} and t_{PZH} are the same as t_{en}.
G. t_{PLH} and t_{PHL} are the same as t_{pd}.

Figure 1. Load Circuit and Voltage Waveforms

PARAMETER MEASUREMENT INFORMATION
V_{CC} = 3.3 V ± 0.3 V

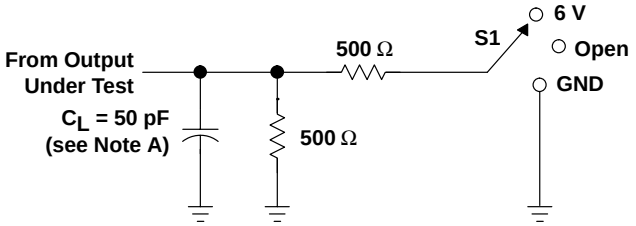

LOAD CIRCUIT

TEST	S1
t_{pd}	Open
t_{PLZ}/t_{PZL}	6 V
t_{PHZ}/t_{PZH}	GND

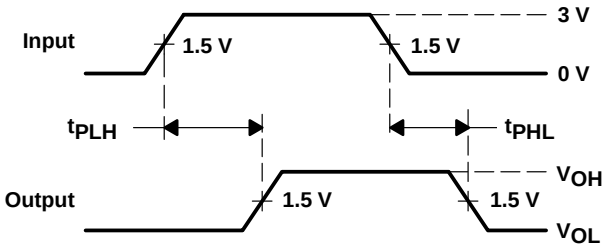

VOLTAGE WAVEFORMS
PROPAGATION DELAY TIMES

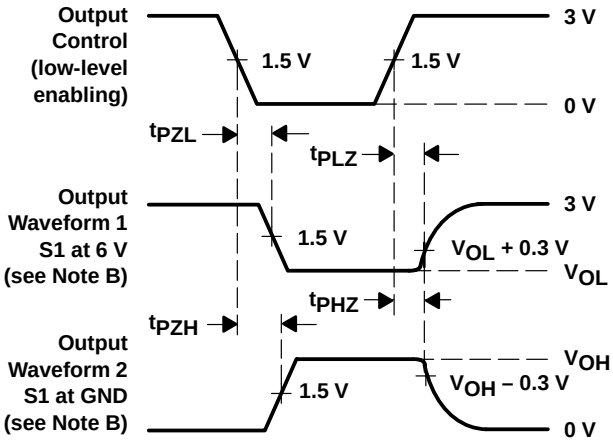

VOLTAGE WAVEFORMS
ENABLE AND DISABLE TIMES

NOTES: A. C_L includes probe and jig capacitance.
B. Waveform 1 is for an output with internal conditions such that the output is low except when disabled by the output control. Waveform 2 is for an output with internal conditions such that the output is high except when disabled by the output control.
C. All input pulses are supplied by generators having the following characteristics: PRR ≤ 10 MHz, Z_O = 50 Ω, t_r ≤ 2.5 ns, t_f ≤ 2.5 ns.
D. The outputs are measured one at a time with one transition per measurement.
E. t_{PLZ} and t_{PHZ} are the same as t_{dis}.
F. t_{PZL} and t_{PZH} are the same as t_{en}.
G. t_{PLH} and t_{PHL} are the same as t_{pd}.

Figure 2. Load Circuit and Voltage Waveforms

PRODUCT PREVIEW

- **5-Ω Switch Connection Between Two Ports**
- **Isolation Under Power-Off Conditions**
- **Package Options Include Plastic Thin Shrink Small-Outline (DGG), Thin Very Small-Outline (DGV), and 300-mil Shrink Small-Outline (DL) Packages**

description

The SN74CBTLV16211 provides 24 bits of high-speed bus switching. The low on-state resistance of the switch allows connections to be made with minimal propagation delay.

The device is organized as dual 12-bit bus switches with separate output-enable ($\overline{OE}$) inputs. It can be used as two 12-bit bus switches or one 24-bit bus switch. When $\overline{OE}$ is low, the associated 12-bit bus switch is on and port A is connected to port B. When $\overline{OE}$ is high, the switch is open, and a high-impedance state exists between the two ports.

To ensure the high-impedance state during power up or power down, $\overline{OE}$ should be tied to V_{CC} through a pullup resistor; the minimum value of the resistor is determined by the current-sinking capability of the driver.

The SN74CBTLV16211 is characterized for operation from –40°C to 85°C.

DGG, DGV, OR DL PACKAGE
(TOP VIEW)

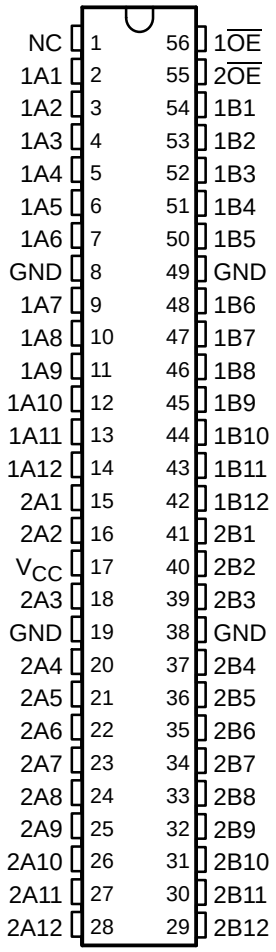

NC – No internal connection

FUNCTION TABLE
(each 12-bit bus switch)

INPUT $\overline{OE}$	FUNCTION
L	A port = B port
H	Disconnect

PRODUCT PREVIEW

PRODUCT PREVIEW information concerns products in the formative or design phase of development. Characteristic data and other specifications are design goals. Texas Instruments reserves the right to change or discontinue these products without notice.

Copyright © 1998, Texas Instruments Incorporated

PRODUCT PREVIEW

logic diagram (positive logic)

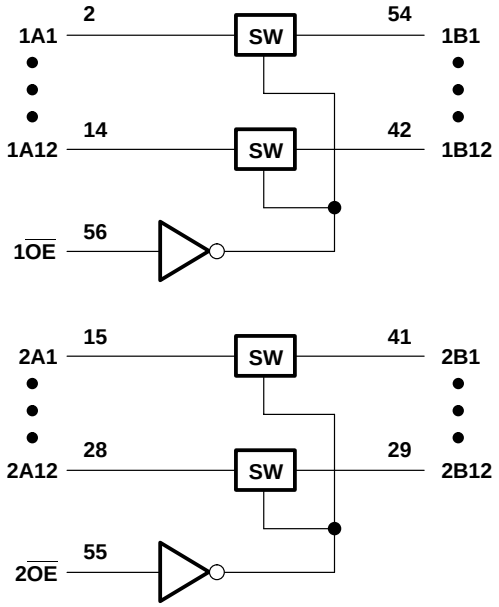

simplified schematic, each FET switch

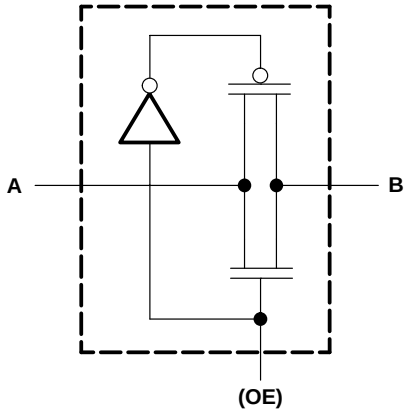

absolute maximum ratings over operating free-air temperature range (unless otherwise noted)†

Supply voltage range, V_{CC}		–0.5 V to 4.6 V
Input voltage range, V_I (see Note 1)		–0.5 V to 4.6 V
Continuous channel current		128 mA
Input clamp current, I_{IK} ($V_I < 0$)		–50 mA
Package thermal impedance, θ_{JA} (see Note 2):	DGG package	81°C/W
	DGV package	86°C/W
	DL package	74°C/W
Storage temperature range, T_{stg}		–65°C to 150°C

† Stresses beyond those listed under “absolute maximum ratings” may cause permanent damage to the device. These are stress ratings only, and functional operation of the device at these or any other conditions beyond those indicated under “recommended operating conditions” is not implied. Exposure to absolute-maximum-rated conditions for extended periods may affect device reliability.

NOTES: 1. The input and output negative-voltage ratings may be exceeded if the input and output clamp-current ratings are observed.
2. The package thermal impedance is calculated in accordance with JESD 51.

recommended operating conditions (see Note 3)

			MIN	MAX	UNIT
V_{CC}	Supply voltage		2.3	3.6	V
V_{IH}	High-level control input voltage	V_{CC} = 2.3 V to 2.7 V	1.7		V
		V_{CC} = 2.7 V to 3.6 V	2		
V_{IL}	Low-level control input voltage	V_{CC} = 2.3 V to 2.7 V		0.7	V
		V_{CC} = 2.7 V to 3.6 V		0.8	
T_A	Operating free-air temperature		–40	85	°C

NOTE 3: All unused control inputs of the device must be held at V_{CC} or GND to ensure proper device operation. Refer to the TI application report, *Implications of Slow or Floating CMOS Inputs*, literature number SCBA004.

electrical characteristics over recommended operating free-air temperature range (unless otherwise noted)

PARAMETER		TEST CONDITIONS			MIN	TYP†	MAX	UNIT
V_{IK}		V_{CC} = 3 V,	I_I = –18 mA				–1.2	V
I_I		V_{CC} = 3.6 V,	V_I = V_{CC} or GND				±1	µA
I_{off}		V_{CC} = 0,	V_I or V_O= 0 to 3.6 V				10	µA
I_{CC}		V_{CC} = 3.6 V,	I_O = 0,	V_I = V_{CC} or GND			10	µA
ΔI_{CC}‡	Control inputs	V_{CC} = 3.6 V,	One input at 3 V,	Other inputs at V_{CC} or GND			300	µA
C_i	Control inputs	V_I = 3 V or 0						pF
$C_{io(OFF)}$		V_O = 3 V or 0,	$\overline{OE}$ = V_{CC}					pF
r_{on}§		V_{CC} = 2.3 V, TYP at V_{CC} = 2.5 V	V_I = 0	I_I = 64 mA				Ω
				I_I = 24 mA				
			V_I = 1.7 V,	I_I = 15 mA				
		V_{CC} = 3 V	V_I = 0	I_I = 64 mA				
				I_I = 24 mA				
			V_I = 2.4 V,	I_I = 15 mA				

† All typical values are at V_{CC} = 3.3 V (unless otherwise noted), T_A = 25°C.
‡ This is the increase in supply current for each input that is at the specified voltage level rather than V_{CC} or GND.
§ Measured by the voltage drop between the A and B terminals at the indicated current through the switch. On-state resistance is determined by the lower of the voltages of the two (A or B) terminals.

PRODUCT PREVIEW

switching characteristics over recommended operating free-air temperature range (unless otherwise noted) (see Figures 1 and 2)

PARAMETER	FROM (INPUT)	TO (OUTPUT)	V_{CC} = 2.5 V ± 0.2 V		V_{CC} = 3.3 V ± 0.3 V		UNIT
			MIN	MAX	MIN	MAX	
t_{pd}¶	A or B	B or A					ns
t_{en}	$\overline{OE}$	A or B					ns
t_{dis}	$\overline{OE}$	A or B					ns

¶ The propagation delay is the calculated RC time constant of the typical on-state resistance of the switch and the specified load capacitance, when driven by an ideal voltage source (zero output impedance).

PARAMETER MEASUREMENT INFORMATION
V_{CC} = 2.5 V ± 0.2 V

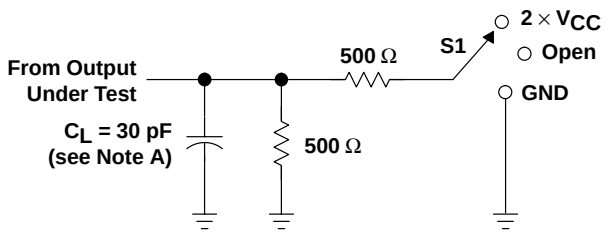

LOAD CIRCUIT

TEST	S1
t_{pd}	Open
t_{PLZ}/t_{PZL}	2 × V_{CC}
t_{PHZ}/t_{PZH}	GND

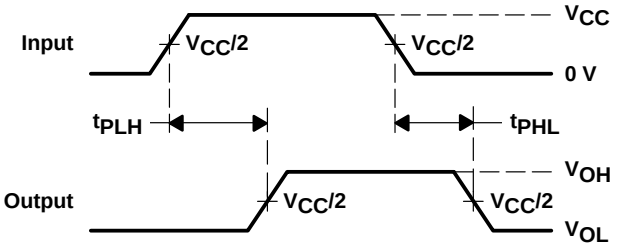

VOLTAGE WAVEFORMS
PROPAGATION DELAY TIMES

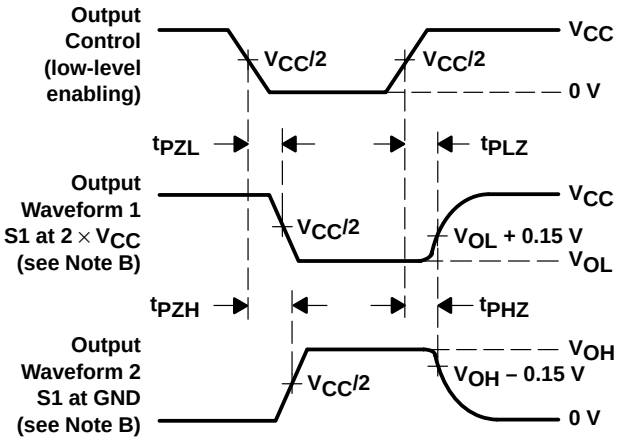

VOLTAGE WAVEFORMS
ENABLE AND DISABLE TIMES

NOTES: A. C_L includes probe and jig capacitance.
B. Waveform 1 is for an output with internal conditions such that the output is low except when disabled by the output control. Waveform 2 is for an output with internal conditions such that the output is high except when disabled by the output control.
C. All input pulses are supplied by generators having the following characteristics: PRR ≤ 10 MHz, Z_O = 50 Ω, t_r ≤ 2 ns, t_f ≤ 2 ns.
D. The outputs are measured one at a time with one transition per measurement.
E. t_{PLZ} and t_{PHZ} are the same as t_{dis}.
F. t_{PZL} and t_{PZH} are the same as t_{en}.
G. t_{PLH} and t_{PHL} are the same as t_{pd}.

Figure 1. Load Circuit and Voltage Waveforms

PRODUCT PREVIEW

PARAMETER MEASUREMENT INFORMATION
V_{CC} = 3.3 V ± 0.3 V

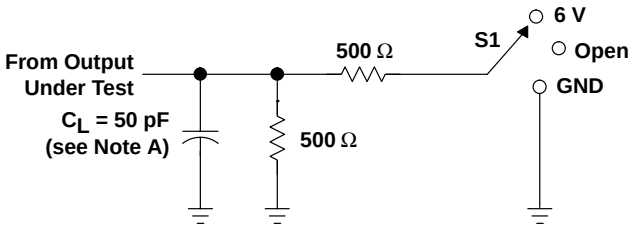

LOAD CIRCUIT

TEST	S1
t_{pd}	Open
t_{PLZ}/t_{PZL}	6 V
t_{PHZ}/t_{PZH}	GND

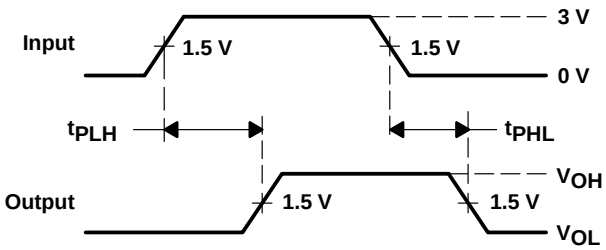

VOLTAGE WAVEFORMS
PROPAGATION DELAY TIMES

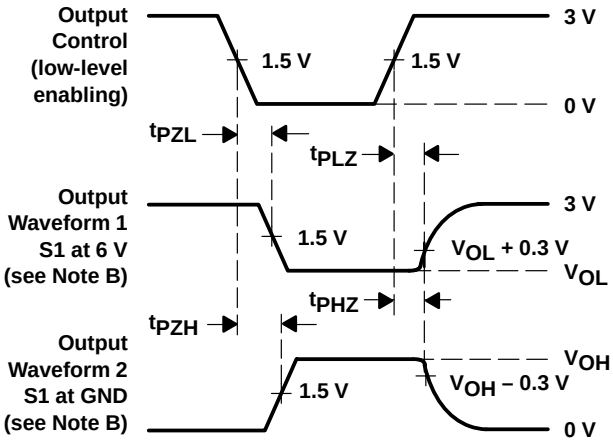

VOLTAGE WAVEFORMS
ENABLE AND DISABLE TIMES

NOTES: A. C_L includes probe and jig capacitance.
B. Waveform 1 is for an output with internal conditions such that the output is low except when disabled by the output control. Waveform 2 is for an output with internal conditions such that the output is high except when disabled by the output control.
C. All input pulses are supplied by generators having the following characteristics: PRR ≤ 10 MHz, Z_O = 50 Ω, t_r ≤ 2.5 ns, t_f ≤ 2.5 ns.
D. The outputs are measured one at a time with one transition per measurement.
E. t_{PLZ} and t_{PHZ} are the same as t_{dis}.
F. t_{PZL} and t_{PZH} are the same as t_{en}.
G. t_{PLH} and t_{PHL} are the same as t_{pd}.

Figure 2. Load Circuit and Voltage Waveforms

PRODUCT PREVIEW

- **4-Ω Switch Connection Between Two Ports**
- **Isolation Under Power-Off Conditions**
- **Break-Before-Make Feature**
- **Package Options Include Plastic Thin Shrink Small-Outline (DGG), Thin Very Small-Outline (DGV), and 300-mil Shrink Small-Outline (DL) Packages**

DGG, DGV, OR DL PACKAGE
(TOP VIEW)

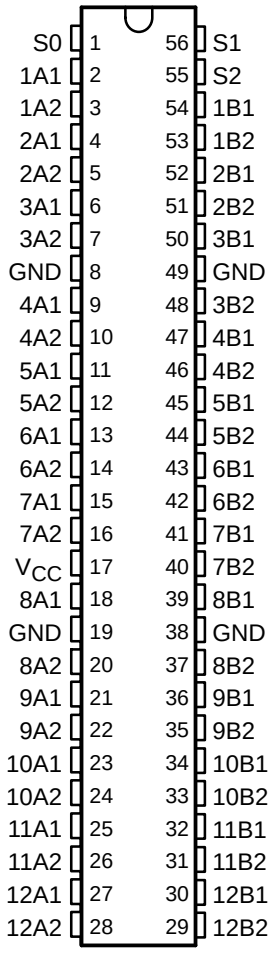

description

The SN74CBTLV16212 provides 24 bits of high-speed bus switching or exchanging. The low on-state resistance of the switch allows connections to be made with minimal propagation delay.

The device operates as a 24-bit bus switch or a 12-bit bus exchanger, which provides data exchanging between the four signal ports via the data-select (S0, S1, S2) terminals.

The SN74CBTLV16212 is specified by the break-before-make design to have no through current when switching directions.

The SN74CBTLV16212 is characterized for operation from –40°C to 85°C.

FUNCTION TABLE

INPUTS			INPUTS/OUTPUTS		FUNCTION
S2	S1	S0	A1	A2	
L	L	L	Z	Z	Disconnect
L	L	H	B1	Z	A1 port = B1 port
L	H	L	B2	Z	A1 port = B2 port
L	H	H	Z	B1	A2 port = B1 port
H	L	L	Z	B2	A2 port = B2 port
H	L	H	Z	Z	Disconnect
H	H	L	B1	B2	A1 port = B1 port A2 port = B2 port
H	H	H	B2	B1	A1 port = B2 port A2 port = B1 port

PRODUCT PREVIEW

PRODUCT PREVIEW information concerns products in the formative or design phase of development. Characteristic data and other specifications are design goals. Texas Instruments reserves the right to change or discontinue these products without notice.

Copyright © 1998, Texas Instruments Incorporated

PRODUCT PREVIEW

logic diagram (positive logic)

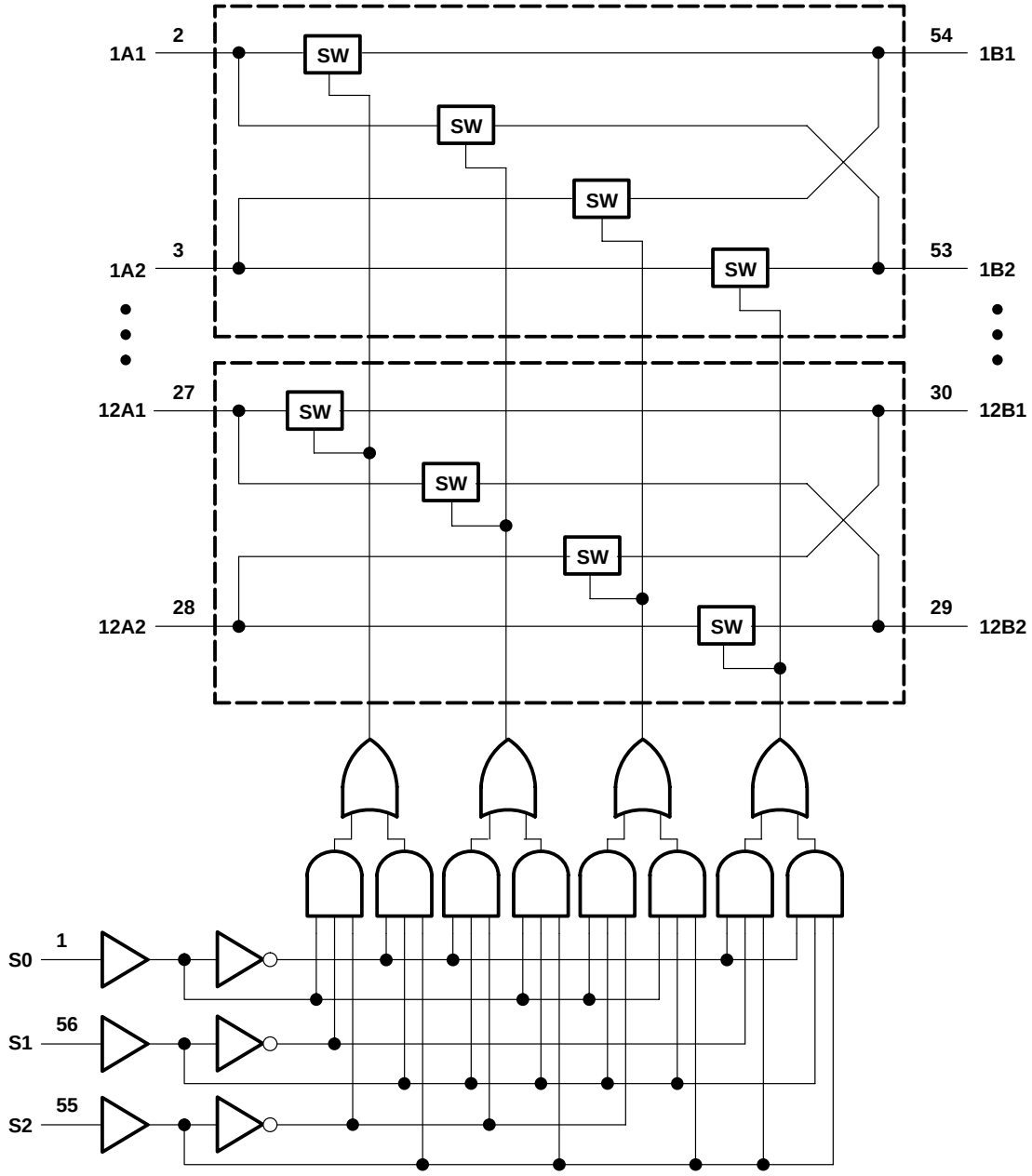

simplified schematic, each FET switch

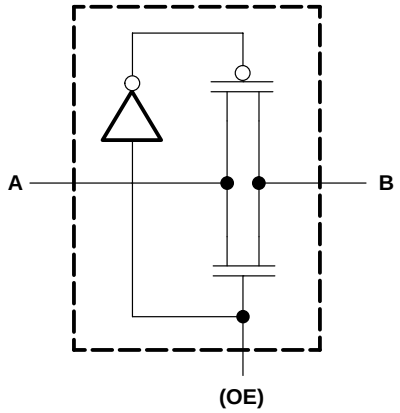

absolute maximum ratings over operating free-air temperature range (unless otherwise noted)†

Supply voltage range, V_{CC} . . . . . –0.5 V to 4.6 V
Input voltage range, V_I (see Note 1) . . . . . –0.5 V to 4.6 V
Continuous channel current . . . . . 128 mA
Input clamp current, I_{IK} ($V_I < 0$) . . . . . –50 mA
Package thermal impedance, θ_{JA} (see Note 2): DGG package . . . . . 81°C/W
DGV package . . . . . 86°C/W
DL package . . . . . 74°C/W
Storage temperature range, T_{stg} . . . . . –65°C to 150°C

† Stresses beyond those listed under “absolute maximum ratings” may cause permanent damage to the device. These are stress ratings only, and functional operation of the device at these or any other conditions beyond those indicated under “recommended operating conditions” is not implied. Exposure to absolute-maximum-rated conditions for extended periods may affect device reliability.

NOTES: 1. The input and output negative-voltage ratings may be exceeded if the input and output clamp-current ratings are observed.
2. The package thermal impedance is calculated in accordance with JESD 51.

recommended operating conditions (see Note 3)

			MIN	MAX	UNIT
V_{CC}	Supply voltage		2.3	3.6	V
V_{IH}	High-level control input voltage	V_{CC} = 2.3 V to 2.7 V	1.7		V
		V_{CC} = 2.7 V to 3.6 V	2		
V_{IL}	Low-level control input voltage	V_{CC} = 2.3 V to 2.7 V		0.7	V
		V_{CC} = 2.7 V to 3.6 V		0.8	
T_A	Operating free-air temperature		–40	85	°C

NOTE 3: All unused control inputs of the device must be held at V_{CC} or GND to ensure proper device operation. Refer to the TI application report, *Implications of Slow or Floating CMOS Inputs*, literature number SCBA004.

PRODUCT PREVIEW

electrical characteristics over recommended operating free-air temperature range (unless otherwise noted)

PARAMETER		TEST CONDITIONS			MIN	TYP†	MAX	UNIT
V_{IK}		V_{CC} = 3 V,	I_I = –18 mA				–1.2	V
I_I		V_{CC} = 3.6 V,	V_I = V_{CC} or GND				±1	µA
I_{off}		V_{CC} = 0,	V_I or V_O= 0 to 3.6 V				10	µA
I_{CC}		V_{CC} = 3.6 V,	I_O = 0,	V_I = V_{CC} or GND			10	µA
ΔI_{CC}‡	Control inputs	V_{CC} = 3.6 V,	One input at 3 V,	Other inputs at V_{CC} or GND			300	µA
C_i	Control inputs	V_I = 3 V or 0						pF
$C_{io(OFF)}$		V_O = 3 V or 0,	$\overline{OE}$ = V_{CC}					pF
r_{on}§		V_{CC} = 2.3 V, TYP at V_{CC} = 2.5 V	V_I = 0	I_I = 64 mA				Ω
				I_I = 24 mA				
			V_I = 1.7 V,	I_I = 15 mA				
		V_{CC} = 3 V	V_I = 0	I_I = 64 mA				
				I_I = 24 mA				
			V_I = 2.4 V,	I_I = 15 mA				

† All typical values are at V_{CC} = 3.3 V (unless otherwise noted), T_A = 25°C.
‡ This is the increase in supply current for each input that is at the specified voltage level rather than V_{CC} or GND.
§ Measured by the voltage drop between the A and B terminals at the indicated current through the switch. On-state resistance is determined by the lower of the voltages of the two (A or B) terminals.

switching characteristics over recommended operating free-air temperature range (unless otherwise noted) (see Figures 1 and 2)

PARAMETER	FROM (INPUT)	TO (OUTPUT)	V_{CC} = 2.5 V ± 0.2 V		V_{CC} = 3.3 V ± 0.3 V		UNIT
			MIN	MAX	MIN	MAX	
t_{pd}¶	A or B	B or A					ns
t_{pd}	S	B or A					ns
t_{en}	S	A or B					ns
t_{dis}	S	A or B					ns

¶ The propagation delay is the calculated RC time constant of the typical on-state resistance of the switch and the specified load capacitance, when driven by an ideal voltage source (zero output impedance).

PRODUCT PREVIEW

PARAMETER MEASUREMENT INFORMATION
V_{CC} = 2.5 V ± 0.2 V

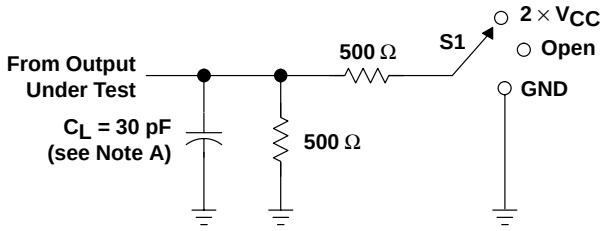

LOAD CIRCUIT

TEST	S1
t_{pd}	Open
t_{PLZ}/t_{PZL}	2 × V_{CC}
t_{PHZ}/t_{PZH}	GND

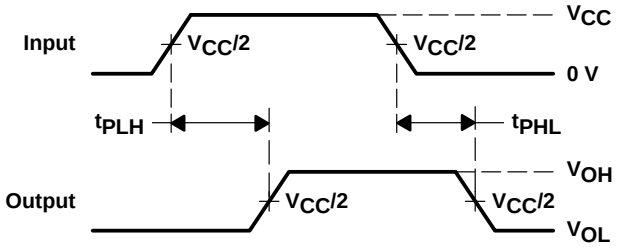

VOLTAGE WAVEFORMS
PROPAGATION DELAY TIMES

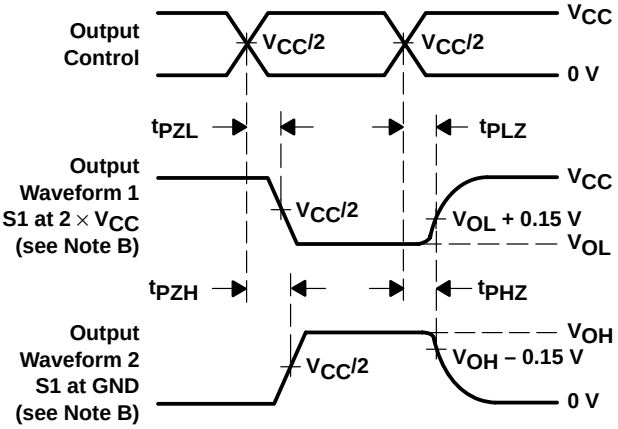

VOLTAGE WAVEFORMS
ENABLE AND DISABLE TIMES

NOTES: A. C_L includes probe and jig capacitance.
B. Waveform 1 is for an output with internal conditions such that the output is low except when disabled by the output control. Waveform 2 is for an output with internal conditions such that the output is high except when disabled by the output control.
C. All input pulses are supplied by generators having the following characteristics: PRR ≤ 10 MHz, Z_O = 50 Ω, t_r ≤ 2 ns, t_f ≤ 2 ns.
D. The outputs are measured one at a time with one transition per measurement.
E. t_{PLZ} and t_{PHZ} are the same as t_{dis}.
F. t_{PZL} and t_{PZH} are the same as t_{en}.
G. t_{PLH} and t_{PHL} are the same as t_{pd}.

Figure 1. Load Circuit and Voltage Waveforms

PRODUCT PREVIEW

PARAMETER MEASUREMENT INFORMATION
V_{CC} = 3.3 V ± 0.3 V

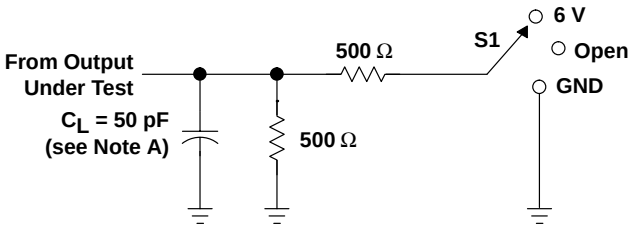

LOAD CIRCUIT

TEST	S1
t_{pd}	Open
t_{PLZ}/t_{PZL}	6 V
t_{PHZ}/t_{PZH}	GND

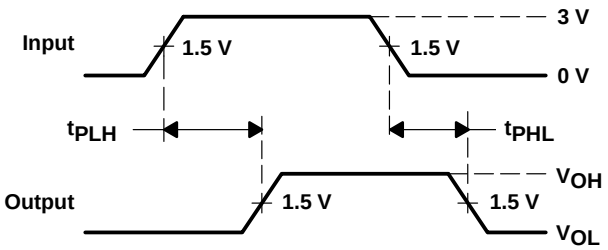

VOLTAGE WAVEFORMS
PROPAGATION DELAY TIMES

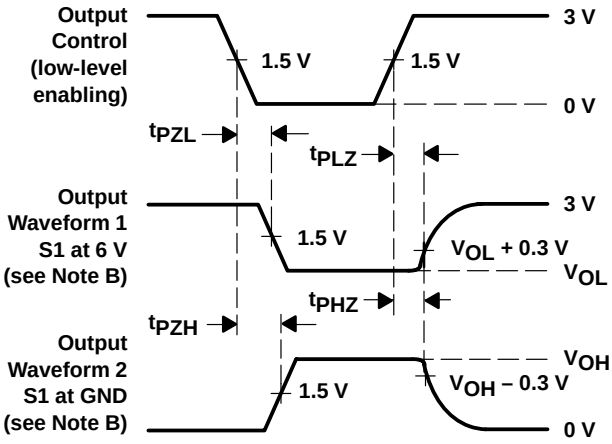

VOLTAGE WAVEFORMS
ENABLE AND DISABLE TIMES

NOTES: A. C_L includes probe and jig capacitance.
B. Waveform 1 is for an output with internal conditions such that the output is low except when disabled by the output control. Waveform 2 is for an output with internal conditions such that the output is high except when disabled by the output control.
C. All input pulses are supplied by generators having the following characteristics: PRR ≤ 10 MHz, Z_O = 50 Ω, t_r ≤ 2.5 ns, t_f ≤ 2.5 ns.
D. The outputs are measured one at a time with one transition per measurement.
E. t_{PLZ} and t_{PHZ} are the same as t_{dis}.
F. t_{PZL} and t_{PZH} are the same as t_{en}.
G. t_{PLH} and t_{PHL} are the same as t_{pd}.

Figure 2. Load Circuit and Voltage Waveforms

PRODUCT PREVIEW

- **4-Ω Switch Connection Between Two Ports**
- **Isolation Under Power-Off Conditions**
- **Break-Before-Make Feature**
- **Packaged in Plastic Thin Shrink Small-Outline Package**

DGG PACKAGE
(TOP VIEW)

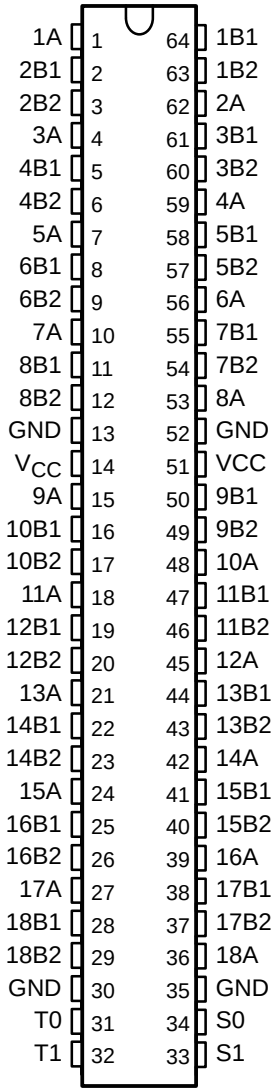

description

The SN74CBTLV16235 is an 18-bit 1-of-2 FET multiplexer/demultiplexer used in applications in which two separate data paths must be multiplexed onto, or demultiplexed from, a single path. This device can be used for memory interleaving, where two different banks of memory need to be addressed simultaneously.

The device is organized as a dual 9-bit 1-of-2 multiplexer/demultiplexer with separate control inputs. It can be used as two 9-bit multiplexer/demultiplexers or as one 18-bit multiplexer/demultiplexer. Two select (S0 and S1) inputs control the data flow. When the test (T0 and T1) inputs are asserted, port A is connected to both ports B1 and B2. The control inputs can be driven with a 5-V CMOS, a 5-V TTL, a low-voltage TTL, or an SSTL_3 driver.

The SN74CBTLV16235 is specified by the break-before-make design to have no through current when switching directions.

The SN74CBTLV16235 is characterized for operation from –40°C to 85°C.

FUNCTION TABLE
(each 9-bit multiplexer/demultiplexer)

INPUTS		FUNCTION
T	S	
L	L	A port = B1 port
L	H	A port = B2 port
H	X	A port = B1 port = B2 port

PRODUCT PREVIEW

PRODUCT PREVIEW information concerns products in the formative or design phase of development. Characteristic data and other specifications are design goals. Texas Instruments reserves the right to change or discontinue these products without notice.

Copyright © 1998, Texas Instruments Incorporated

PRODUCT PREVIEW

logic diagram (positive logic)

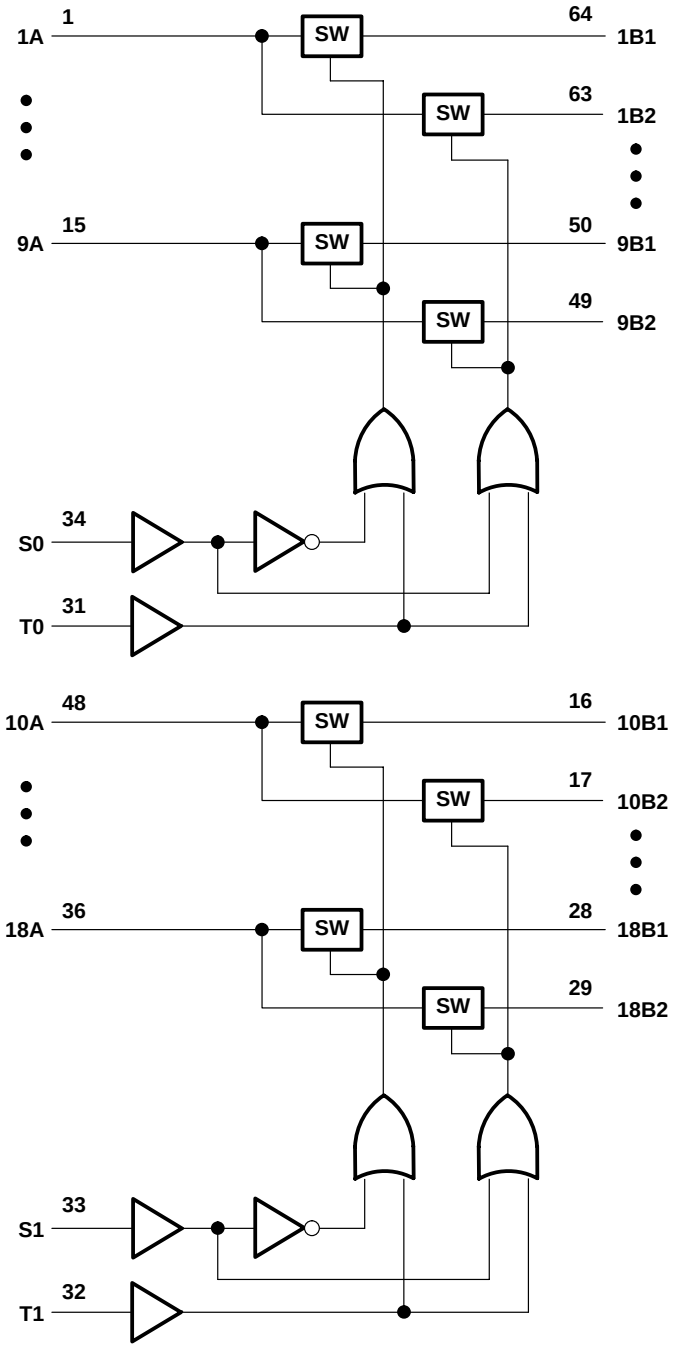

simplified schematic, each FET switch

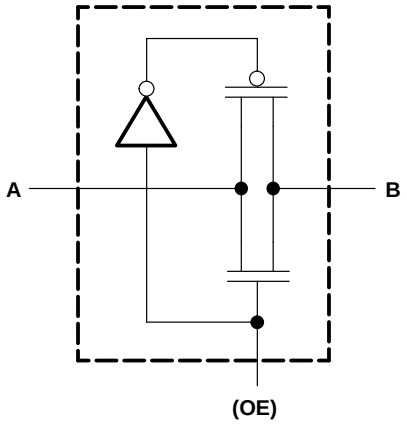

absolute maximum ratings over operating free-air temperature range (unless otherwise noted)†

Supply voltage range, V_{CC} . . . . . –0.5 V to 4.6 V
Input voltage range, V_I (see Note 1) . . . . . –0.5 V to 4.6 V
Continuous channel current . . . . . 128 mA
Input clamp current, I_{IK} (V_I < 0) . . . . . –50 mA
Package thermal impedance, θ_{JA} (see Note 2) . . . . . 73°C/W
Storage temperature range, T_{stg} . . . . . –65°C to 150°C

† Stresses beyond those listed under "absolute maximum ratings" may cause permanent damage to the device. These are stress ratings only, and functional operation of the device at these or any other conditions beyond those indicated under "recommended operating conditions" is not implied. Exposure to absolute-maximum-rated conditions for extended periods may affect device reliability.

NOTES: 1. The input and output negative-voltage ratings may be exceeded if the input and output clamp-current ratings are observed.
2. The package thermal impedance is calculated in accordance with JESD 51.

recommended operating conditions (see Note 3)

			MIN	MAX	UNIT
V_{CC}	Supply voltage		2.3	3.6	V
V_{IH}	High-level control input voltage	V_{CC} = 2.3 V to 2.7 V	1.7		V
		V_{CC} = 2.7 V to 3.6 V	2		
V_{IL}	Low-level control input voltage	V_{CC} = 2.3 V to 2.7 V		0.7	V
		V_{CC} = 2.7 V to 3.6 V		0.8	
T_A	Operating free-air temperature		–40	85	°C

NOTE 3: All unused control inputs of the device must be held at V_{CC} or GND to ensure proper device operation. Refer to the TI application report, *Implications of Slow or Floating CMOS Inputs*, literature number SCBA004.

PRODUCT PREVIEW

PRODUCT PREVIEW

electrical characteristics over recommended operating free-air temperature range (unless otherwise noted)

PARAMETER		TEST CONDITIONS			MIN	TYP†	MAX	UNIT
V_{IK}		V_{CC} = 3 V,	I_I = –18 mA				–1.2	V
I_I		V_{CC} = 3.6 V,	V_I = V_{CC} or GND				±5	µA
I_{off}		V_{CC} = 0,	V_I or V_O = 0 to 3.6 V				10	µA
I_{CC}		V_{CC} = 3.6 V,	I_O = 0,	V_I = V_{CC} or GND			10	µA
ΔI_{CC}‡	Control input	V_{CC} = 3.6 V,	One input at 3 V,	Other inputs at V_{CC} or GND			300	µA
C_i	Control input	V_I = 3 V or 0						pF
$C_{io(OFF)}$		V_O = 3 V or 0						pF
r_{on}§		V_{CC} = 2.3 V, TYP at V_{CC} = 2.5 V	V_I = 0	I_I = 64 mA				Ω
				I_I = 24 mA				
			V_I = 1.7 V,	I_I = 15 mA				
		V_{CC} = 3 V	V_I = 0	I_I = 64 mA				
				I_I = 24 mA				
			V_I = 2.4 V,	I_I = 15 mA				

† All typical values are at V_{CC} = 3.3 V (unless otherwise noted), T_A = 25°C.
‡ This is the increase in supply current for each input that is at the specified voltage level rather than V_{CC} or GND.
§ Measured by the voltage drop between the A and B terminals at the indicated current through the switch. On-state resistance is determined by the lower of the voltages of the two (A or B) terminals.

switching characteristics over recommended operating free-air temperature range (unless otherwise noted) (see Figures 1 and 2)

PARAMETER	FROM (INPUT)	TO (OUTPUT)	V_{CC} = 2.5 V ± 0.2 V		V_{CC} = 3.3 V ± 0.3 V		UNIT
			MIN	MAX	MIN	MAX	
t_{pd}¶	A or B	B or A					ns
t_{en}	S	A or B					ns
t_{dis}	S	A or B					ns
t_{en}	T	A or B					ns
t_{dis}	T	A or B					ns

¶ The propagation delay is the calculated RC time constant of the typical on-state resistance of the switch and the specified load capacitance, when driven by an ideal voltage source (zero output impedance).

PARAMETER MEASUREMENT INFORMATION
V_{CC} = 2.5 V ± 0.2 V

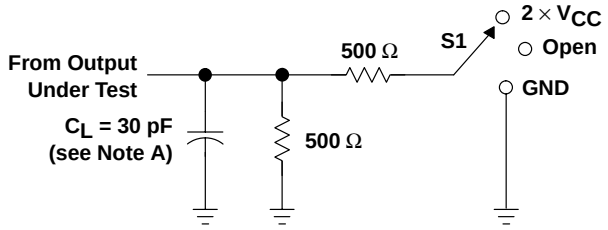

LOAD CIRCUIT

TEST	S1
t_{pd}	Open
t_{PLZ}/t_{PZL}	2 × V_{CC}
t_{PHZ}/t_{PZH}	GND

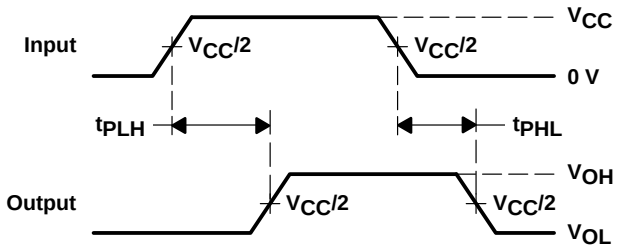

VOLTAGE WAVEFORMS
PROPAGATION DELAY TIMES

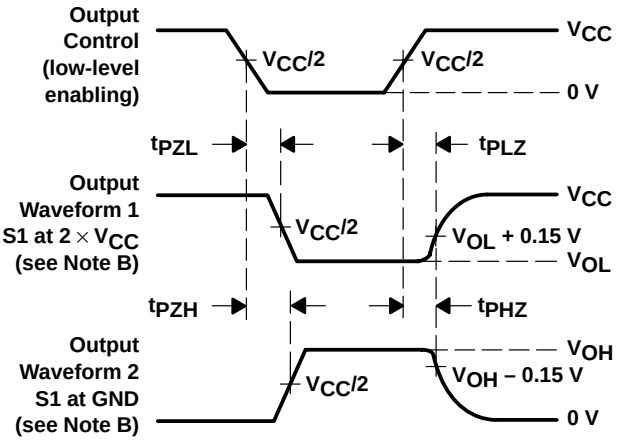

VOLTAGE WAVEFORMS
ENABLE AND DISABLE TIMES

NOTES: A. C_L includes probe and jig capacitance.
B. Waveform 1 is for an output with internal conditions such that the output is low except when disabled by the output control. Waveform 2 is for an output with internal conditions such that the output is high except when disabled by the output control.
C. All input pulses are supplied by generators having the following characteristics: PRR ≤ 10 MHz, Z_O = 50 Ω, t_r ≤ 2 ns, t_f ≤ 2 ns.
D. The outputs are measured one at a time with one transition per measurement.
E. t_{PLZ} and t_{PHZ} are the same as t_{dis}.
F. t_{PZL} and t_{PZH} are the same as t_{en}.
G. t_{PLH} and t_{PHL} are the same as t_{pd}.

Figure 1. Load Circuit and Voltage Waveforms

PRODUCT PREVIEW

PARAMETER MEASUREMENT INFORMATION
V_{CC} = 3.3 V ± 0.3 V

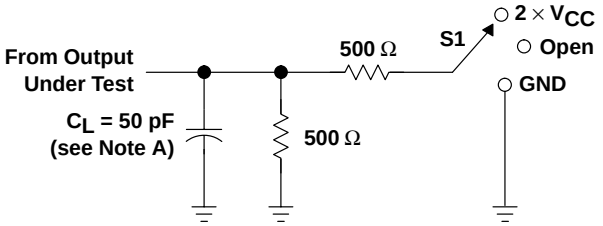

LOAD CIRCUIT

TEST	S1
t_{pd}	Open
t_{PLZ}/t_{PZL}	2 × V_{CC}
t_{PHZ}/t_{PZH}	GND

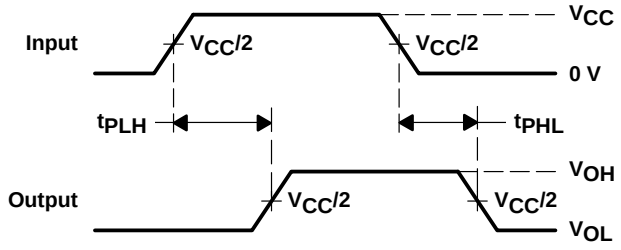

VOLTAGE WAVEFORMS
PROPAGATION DELAY TIMES

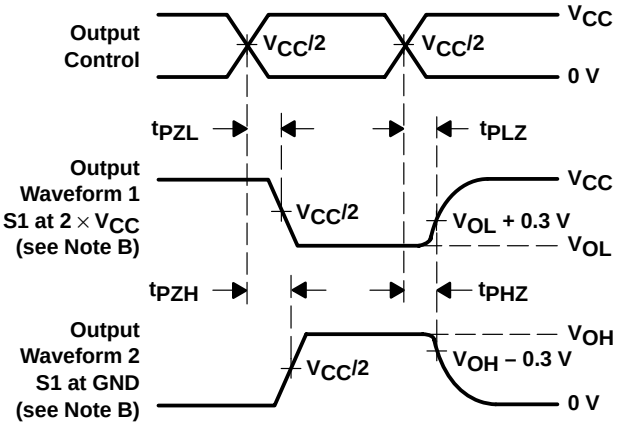

VOLTAGE WAVEFORMS
ENABLE AND DISABLE TIMES

NOTES: A. C_L includes probe and jig capacitance.
B. Waveform 1 is for an output with internal conditions such that the output is low except when disabled by the output control. Waveform 2 is for an output with internal conditions such that the output is high except when disabled by the output control.
C. All input pulses are supplied by generators having the following characteristics: PRR ≤ 10 MHz, Z_O = 50 Ω, t_r ≤ 2 ns, t_f ≤ 2 ns.
D. The outputs are measured one at a time with one transition per measurement.
E. t_{PLZ} and t_{PHZ} are the same as t_{dis}.
F. t_{PZL} and t_{PZH} are the same as t_{en}.
G. t_{PLH} and t_{PHL} are the same as t_{pd}.

Figure 2. Load Circuit and Voltage Waveforms

PRODUCT PREVIEW

- **4-Ω Switch Connection Between Two Ports**
- **Isolation Under Power-Off Conditions**
- **Make-Before-Break Feature**
- **Internal 500-Ω Pulldown Resistors to Ground**
- **Package Options Include Plastic Thin Shrink Small-Outline (DGG), Thin Very Small-Outline (DGV), and 300-mil Shrink Small-Outline (DL) Packages**

DGG, DGV, OR DL PACKAGE
(TOP VIEW)

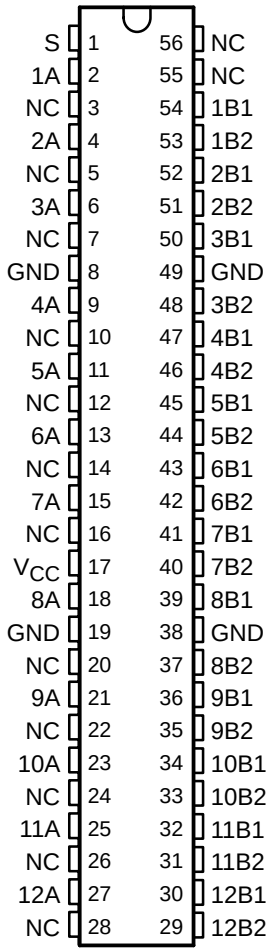

NC – No internal connection

description

The SN74CBTLV16292 is a 12-bit 1-of-2 high-speed FET multiplexer/demultiplexer. The low on-state resistance of the switch allows connections to be made with minimal propagation delay.

When the select (S) input is low, port A is connected to port B1 and R_{INT} is connected to port B2. When S is high, port A is connected to port B2 and R_{INT} is connected to port B1.

The SN74CBTLV16292 is characterized for operation from –40°C to 85°C.

FUNCTION TABLE

INPUT S	FUNCTION
L	A port = B1 port R_{INT} = B2 port
H	A port = B2 port R_{INT} = B1 port

PRODUCT PREVIEW

PRODUCT PREVIEW information concerns products in the formative or design phase of development. Characteristic data and other specifications are design goals. Texas Instruments reserves the right to change or discontinue these products without notice.

Copyright © 1998, Texas Instruments Incorporated

PRODUCT PREVIEW

logic diagram (positive logic)

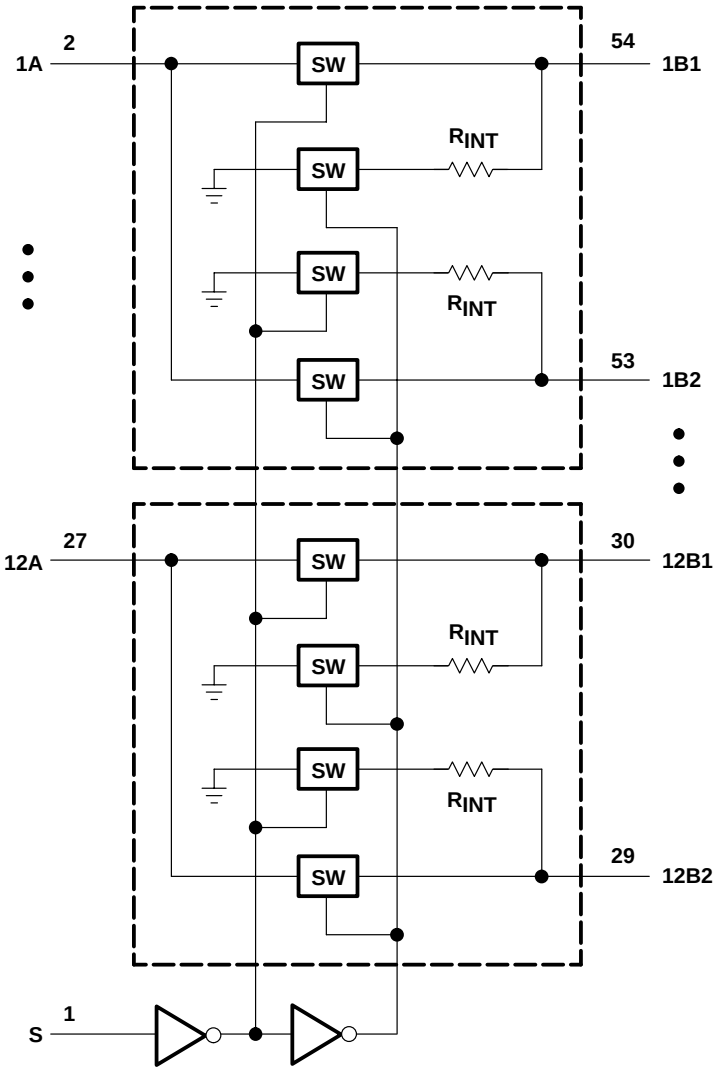

simplified schematic, each FET switch

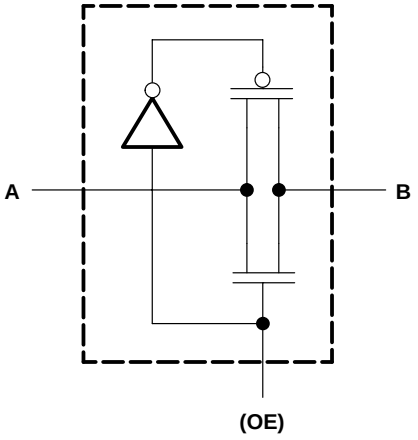

absolute maximum ratings over operating free-air temperature range (unless otherwise noted)†

Supply voltage range, V_{CC} . . . . . –0.5 V to 4.6 V
Input voltage range, V_I (see Note 1) . . . . . –0.5 V to 4.6 V
Continuous channel current . . . . . 128 mA
Input clamp current, I_{IK} (V_I < 0) . . . . . –50 mA
Package thermal impedance, θ_{JA} (see Note 2): DGG package . . . . . 81°C/W
DGV package . . . . . 86°C/W
DL package . . . . . 74°C/W
Storage temperature range, T_{stg} . . . . . –65°C to 150°C

† Stresses beyond those listed under "absolute maximum ratings" may cause permanent damage to the device. These are stress ratings only, and functional operation of the device at these or any other conditions beyond those indicated under "recommended operating conditions" is not implied. Exposure to absolute-maximum-rated conditions for extended periods may affect device reliability.

NOTES: 1. The input and output negative-voltage ratings may be exceeded if the input and output clamp-current ratings are observed.
2. The package thermal impedance is calculated in accordance with JESD 51.

recommended operating conditions (see Note 3)

			MIN	MAX	UNIT
V_{CC}	Supply voltage		2.3	3.6	V
V_{IH}	High-level control input voltage	V_{CC} = 2.3 V to 2.7 V	1.7		V
		V_{CC} = 2.7 V to 3.6 V	2		
V_{IL}	Low-level control input voltage	V_{CC} = 2.3 V to 2.7 V		0.7	V
		V_{CC} = 2.7 V to 3.6 V		0.8	
T_A	Operating free-air temperature		–40	85	°C

NOTE 3: All unused control inputs of the device must be held at V_{CC} or GND to ensure proper device operation. Refer to the TI application report, *Implications of Slow or Floating CMOS Inputs*, literature number SCBA004.

electrical characteristics over recommended operating free-air temperature range (unless otherwise noted)

PARAMETER		TEST CONDITIONS			MIN	TYP‡	MAX	UNIT
V_{IK}		V_{CC} = 3 V,	I_I = –18 mA				–1.2	V
I_I		V_{CC} = 3.6 V,	V_I = V_{CC} or GND				±1	µA
I_{off}		V_{CC} = 0,	V_I or V_O = 0 to 3.6 V				10	µA
I_{CC}		V_{CC} = 3.6 V,	I_O = 0,	V_I = V_{CC} or GND			10	µA
ΔI_{CC}§	Control input	V_{CC} = 3.6 V,	One input at 3 V,	Other inputs at V_{CC} or GND			300	µA
C_i	Control input	V_I = 3 V or 0						pF
$C_{io(OFF)}$		V_O = 3 V or 0						pF
R_{INT}	B1 or B2	V_{CC} = 3.3 V,	I_O = 4 mA			500		Ω
r_{on}¶		V_{CC} = 2.3 V, TYP at V_{CC} = 2.5 V	V_I = 0	I_I = 64 mA				Ω
				I_I = 24 mA				
			V_I = 1.7 V,	I_I = 15 mA				
		V_{CC} = 3 V	V_I = 0	I_I = 64 mA				
				I_I = 24 mA				
			V_I = 2.4 V,	I_I = 15 mA				

‡ All typical values are at V_{CC} = 3.3 V (unless otherwise noted), T_A = 25°C.
§ This is the increase in supply current for each input that is at the specified voltage level rather than V_{CC} or GND.
¶ Measured by the voltage drop between the A and B terminals at the indicated current through the switch. On-state resistance is determined by the lower of the voltages of the two (A or B) terminals.

PRODUCT PREVIEW

switching characteristics over recommended operating free-air temperature range (unless otherwise noted) (see Figures 1 and 2)

PARAMETER	FROM (INPUT)	TO (OUTPUT)	V_{CC} = 2.5 V ± 0.2 V		V_{CC} = 3.3 V ± 0.3 V		UNIT
			MIN	MAX	MIN	MAX	
t_{pd}†	A or B	B or A					ns
t_{en}	S	A or B					ns
t_{dis}	S	A or B					ns

† The propagation delay is the calculated RC time constant of the typical on-state resistance of the switch and the specified load capacitance, when driven by an ideal voltage source (zero output impedance).

switching characteristics, T_A = 0°C to 70°C (unless otherwise noted) (see Figures 1 and 2)

PARAMETER	FROM (INPUT)	TO (OUTPUT)	V_{CC} = 2.5 V ± 0.2 V		V_{CC} = 3.3 V ± 0.3 V		UNIT
			MIN	MAX	MIN	MAX	
t_{pd}†	A or B	B or A					ns
t_{en}	S	A or B					ns
t_{dis}	S	A or B					ns

† The propagation delay is the calculated RC time constant of the typical on-state resistance of the switch and the specified load capacitance, when driven by an ideal voltage source (zero output impedance).

switching characteristics, T_A = 0°C to 70°C (unless otherwise noted) (see Figures 1 and 2)

PARAMETER	DESCRIPTION	V_{CC} = 2.5 V ± 0.2 V		V_{CC} = 3.3 V ± 0.3 V		UNIT
		MIN	MAX	MIN	MAX	
t_{mbb}‡	Make-before-break time					ns

‡ The make-before-break time is the time interval between make and break, during the transition from one selected port to the other.

PRODUCT PREVIEW

PARAMETER MEASUREMENT INFORMATION
V_{CC} = 2.5 V ± 0.2 V

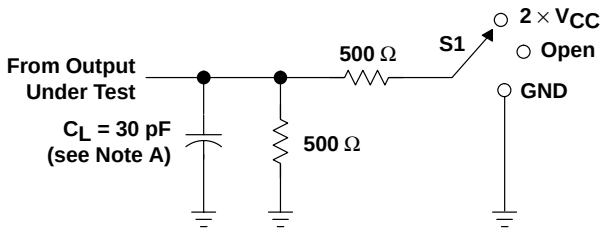

LOAD CIRCUIT

TEST	S1
t_{pd}	Open
t_{PLZ}/t_{PZL}	2 × V_{CC}
t_{PHZ}/t_{PZH}	GND

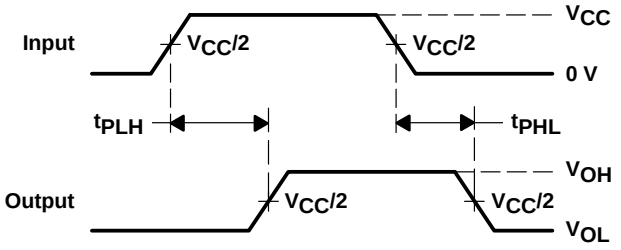

VOLTAGE WAVEFORMS
PROPAGATION DELAY TIMES

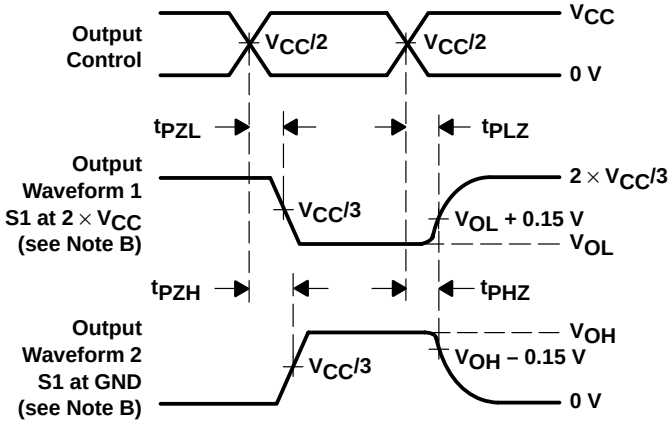

VOLTAGE WAVEFORMS
ENABLE AND DISABLE TIMES

NOTES: A. C_L includes probe and jig capacitance.
B. Waveform 1 is for an output with internal conditions such that the output is low except when disabled by the output control. Waveform 2 is for an output with internal conditions such that the output is high except when disabled by the output control.
C. All input pulses are supplied by generators having the following characteristics: PRR ≤ 10 MHz, Z_O = 50 Ω, t_r ≤ 2 ns, t_f ≤ 2 ns.
D. The outputs are measured one at a time with one transition per measurement.
E. t_{PLZ} and t_{PHZ} are the same as t_{dis}.
F. t_{PZL} and t_{PZH} are the same as t_{en}.
G. t_{PLH} and t_{PHL} are the same as t_{pd}.

Figure 1. Load Circuit and Voltage Waveforms

PRODUCT PREVIEW

PARAMETER MEASUREMENT INFORMATION
V_{CC} = 3.3 V ± 0.3 V

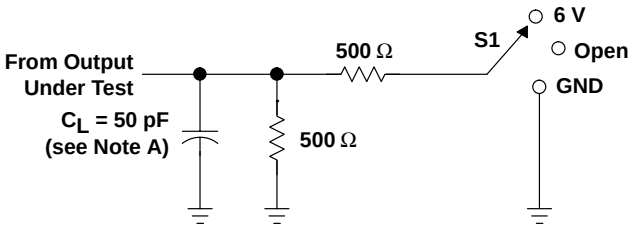

LOAD CIRCUIT

TEST	S1
t_{pd}	Open
t_{PLZ}/t_{PZL}	6 V
t_{PHZ}/t_{PZH}	GND

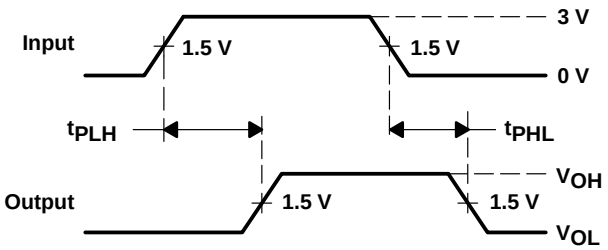

VOLTAGE WAVEFORMS
PROPAGATION DELAY TIMES

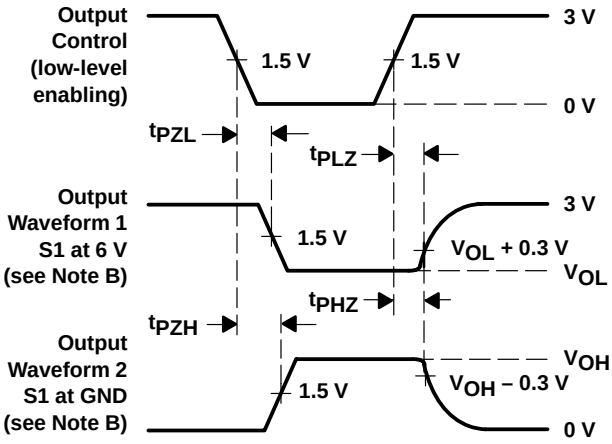

VOLTAGE WAVEFORMS
ENABLE AND DISABLE TIMES

NOTES: A. C_L includes probe and jig capacitance.
B. Waveform 1 is for an output with internal conditions such that the output is low except when disabled by the output control. Waveform 2 is for an output with internal conditions such that the output is high except when disabled by the output control.
C. All input pulses are supplied by generators having the following characteristics: PRR ≤ 10 MHz, Z_O = 50 Ω, t_r ≤ 2.5 ns, t_f ≤ 2.5 ns.
D. The outputs are measured one at a time with one transition per measurement.
E. t_{PLZ} and t_{PHZ} are the same as t_{dis}.
F. t_{PZL} and t_{PZH} are the same as t_{en}.
G. t_{PLH} and t_{PHL} are the same as t_{pd}.

Figure 2. Load Circuit and Voltage Waveforms

PRODUCT PREVIEW

- **4-Ω Switch Connection Between Two Ports**
- **Isolation Under Power-Off Conditions**
- **Make-Before-Break Feature**
- **Internal 500-Ω Pulldown Resistors to Ground**
- **A-Port Inputs/Outputs Have Equivalent 25-Ω Series Resistors, So No External Resistors Are Required**
- **Package Options Include Plastic Thin Shrink Small-Outline (DGG), Thin Very Small-Outline (DGV), and 300-mil Shrink Small-Outline (DL) Packages**

NOTE: For order entry:
The DGG package is abbreviated to G, and
the DGV package is abbreviated to V.

DGG, DGV, OR DL PACKAGE
(TOP VIEW)

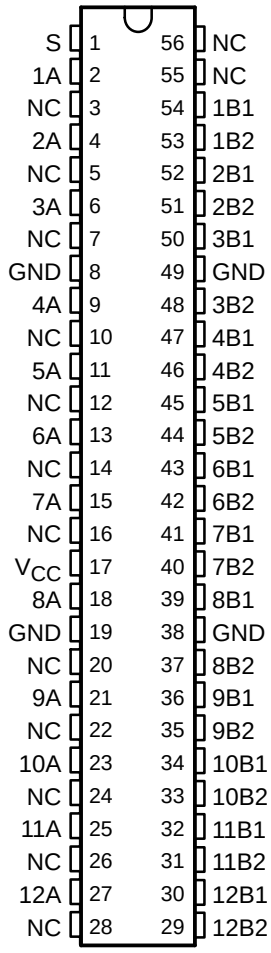

NC – No internal connection

description

The SN74CBTLV162292 is a 12-bit 1-of-2 high-speed FET multiplexer/demultiplexer. The low on-state resistance of the switch allows connections to be made with minimal propagation delay.

When the select (S) input is low, port A is connected to port B1 and R_{INT} is connected to port B2. When S is high, port A is connected to port B2 and R_{INT} is connected to port B1.

The A-port inputs/outputs include equivalent 25-Ω series resistors to reduce overshoot and undershoot.

The SN74CBTLV162292 is characterized for operation from –40°C to 85°C.

FUNCTION TABLE

INPUT S	FUNCTION
L	A port = B1 port R_{INT} = B2 port
H	A port = B2 port R_{INT} = B1 port

PRODUCT PREVIEW

PRODUCT PREVIEW information concerns products in the formative or design phase of development. Characteristic data and other specifications are design goals. Texas Instruments reserves the right to change or discontinue these products without notice.

Copyright © 1998, Texas Instruments Incorporated

PRODUCT PREVIEW

logic diagram (positive logic)

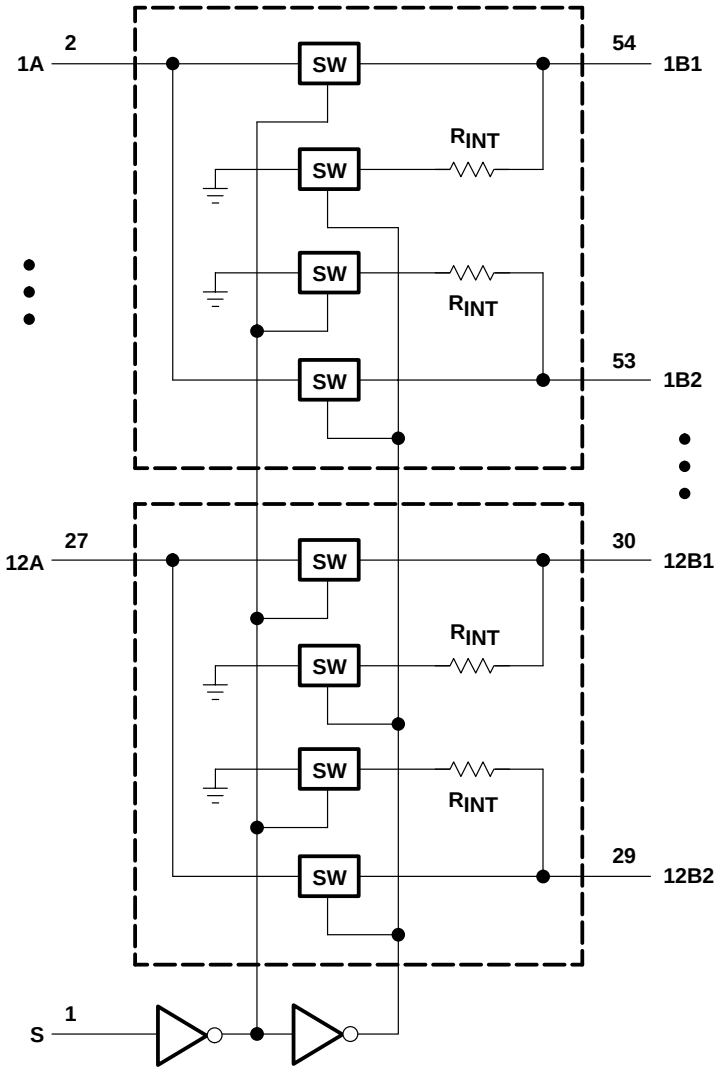

simplified schematic, each FET switch

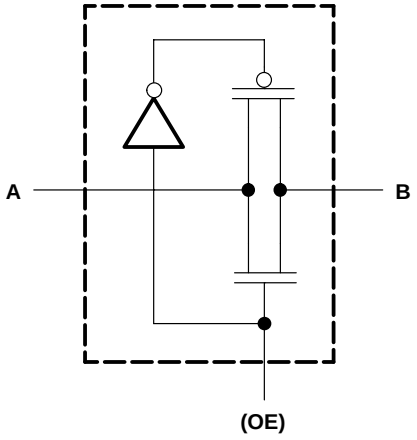

absolute maximum ratings over operating free-air temperature range (unless otherwise noted)†

Supply voltage range, V_{CC} . . . . . –0.5 V to 4.6 V
Input voltage range, V_I (see Note 1) . . . . . –0.5 V to 4.6 V
Continuous channel current . . . . . 128 mA
Input clamp current, I_{IK} (V_I < 0) . . . . . –50 mA
Package thermal impedance, θ_{JA} (see Note 2): DGG package . . . . . 81°C/W
DGV package . . . . . 86°C/W
DL package . . . . . 74°C/W
Storage temperature range, T_{stg} . . . . . –65°C to 150°C

† Stresses beyond those listed under "absolute maximum ratings" may cause permanent damage to the device. These are stress ratings only, and functional operation of the device at these or any other conditions beyond those indicated under "recommended operating conditions" is not implied. Exposure to absolute-maximum-rated conditions for extended periods may affect device reliability.

NOTES: 1. The input and output negative-voltage ratings may be exceeded if the input and output clamp-current ratings are observed.
2. The package thermal impedance is calculated in accordance with JESD 51.

recommended operating conditions (see Note 3)

			MIN	MAX	UNIT
V_{CC}	Supply voltage		2.3	3.6	V
V_{IH}	High-level control input voltage	V_{CC} = 2.3 V to 2.7 V	1.7		V
		V_{CC} = 2.7 V to 3.6 V	2		
V_{IL}	Low-level control input voltage	V_{CC} = 2.3 V to 2.7 V		0.7	V
		V_{CC} = 2.7 V to 3.6 V		0.8	
T_A	Operating free-air temperature		–40	85	°C

NOTE 3: All unused control inputs of the device must be held at V_{CC} or GND to ensure proper device operation. Refer to the TI application report, *Implications of Slow or Floating CMOS Inputs*, literature number SCBA004.

electrical characteristics over recommended operating free-air temperature range (unless otherwise noted)

PARAMETER		TEST CONDITIONS			MIN	TYP‡	MAX	UNIT
V_{IK}		V_{CC} = 3 V,	I_I = –18 mA				–1.2	V
I_I		V_{CC} = 3.6 V,	V_I = V_{CC} or GND				±1	µA
I_{off}		V_{CC} = 0,	V_I or V_O = 0 to 3.6 V				10	µA
I_{CC}		V_{CC} = 3.6 V,	I_O = 0,	V_I = V_{CC} or GND			10	µA
ΔI_{CC}§	Control input	V_{CC} = 3.6 V,	One input at 3 V,	Other inputs at V_{CC} or GND			300	µA
C_i	Control input	V_I = 3 V or 0						pF
$C_{io(OFF)}$		V_O = 3 V or 0						pF
R_{INT}	B1 or B2	V_{CC} = 3.3 V,	I_O = 4 mA			500		Ω
r_{on}¶		V_{CC} = 2.3 V, TYP at V_{CC} = 2.5 V	V_I = 0	I_I = 64 mA				Ω
				I_I = 24 mA				
			V_I = 1.7 V,	I_I = 15 mA				
		V_{CC} = 3 V	V_I = 0	I_I = 64 mA				
				I_I = 24 mA				
			V_I = 2.4 V,	I_I = 15 mA				

‡ All typical values are at V_{CC} = 3.3 V (unless otherwise noted), T_A = 25°C.
§ This is the increase in supply current for each input that is at the specified voltage level rather than V_{CC} or GND.
¶ Measured by the voltage drop between the A and B terminals at the indicated current through the switch. On-state resistance is determined by the lower of the voltages of the two (A or B) terminals.

PRODUCT PREVIEW

switching characteristics over recommended operating free-air temperature range (unless otherwise noted) (see Figures 1 and 2)

PARAMETER	FROM (INPUT)	TO (OUTPUT)	V_{CC} = 2.5 V ± 0.2 V		V_{CC} = 3.3 V ± 0.3 V		UNIT
			MIN	MAX	MIN	MAX	
t_{pd}†	A or B	B or A					ns
t_{en}	S	A or B					ns
t_{dis}	S	A or B					ns

† The propagation delay is the calculated RC time constant of the typical on-state resistance of the switch and the specified load capacitance, when driven by an ideal voltage source (zero output impedance).

switching characteristics, T_A = 0°C to 70°C (unless otherwise noted) (see Figures 1 and 2)

PARAMETER	FROM (INPUT)	TO (OUTPUT)	V_{CC} = 2.5 V ± 0.2 V		V_{CC} = 3.3 V ± 0.3 V		UNIT
			MIN	MAX	MIN	MAX	
t_{pd}†	A or B	B or A					ns
t_{en}	S	A or B					ns
t_{dis}	S	A or B					ns

† The propagation delay is the calculated RC time constant of the typical on-state resistance of the switch and the specified load capacitance, when driven by an ideal voltage source (zero output impedance).

switching characteristics, T_A = 0°C to 70°C (unless otherwise noted) (see Figures 1 and 2)

PARAMETER	DESCRIPTION	V_{CC} = 2.5 V ± 0.2 V		V_{CC} = 3.3 V ± 0.3 V		UNIT
		MIN	MAX	MIN	MAX	
t_{mbb}‡	Make-before-break time					ns

‡ The make-before-break time is the time interval between make and break, during the transition from one selected port to the other.

PRODUCT PREVIEW

PARAMETER MEASUREMENT INFORMATION
V_{CC} = 2.5 V ± 0.2 V

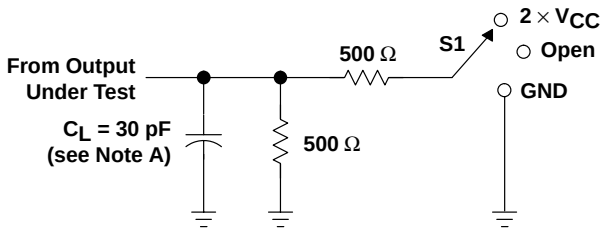

LOAD CIRCUIT

TEST	S1
t_{pd} t_{PLZ}/t_{PZL} t_{PHZ}/t_{PZH}	Open 2 × V_{CC} GND

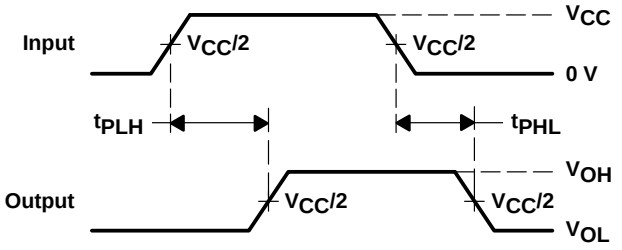

VOLTAGE WAVEFORMS
PROPAGATION DELAY TIMES

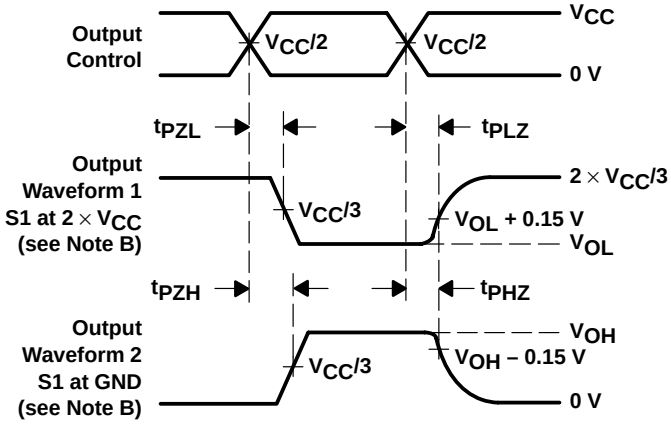

VOLTAGE WAVEFORMS
ENABLE AND DISABLE TIMES

NOTES: A. C_L includes probe and jig capacitance.
B. Waveform 1 is for an output with internal conditions such that the output is low except when disabled by the output control. Waveform 2 is for an output with internal conditions such that the output is high except when disabled by the output control.
C. All input pulses are supplied by generators having the following characteristics: PRR ≤ 10 MHz, Z_O = 50 Ω, t_r ≤ 2 ns, t_f ≤ 2 ns.
D. The outputs are measured one at a time with one transition per measurement.
E. t_{PLZ} and t_{PHZ} are the same as t_{dis}.
F. t_{PZL} and t_{PZH} are the same as t_{en}.
G. t_{PLH} and t_{PHL} are the same as t_{pd}.

Figure 1. Load Circuit and Voltage Waveforms

PRODUCT PREVIEW

PRODUCT PREVIEW

PARAMETER MEASUREMENT INFORMATION
V_{CC} = 3.3 V ± 0.3 V

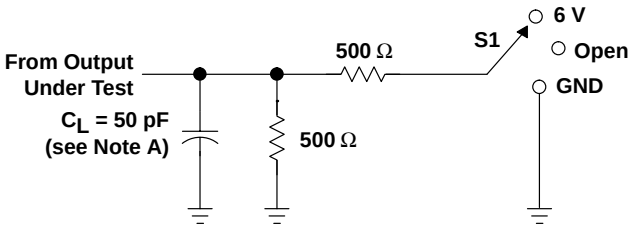

LOAD CIRCUIT

TEST	S1
t_{pd}	Open
t_{PLZ}/t_{PZL}	6 V
t_{PHZ}/t_{PZH}	GND

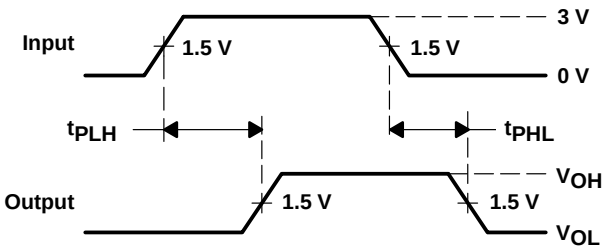

VOLTAGE WAVEFORMS
PROPAGATION DELAY TIMES

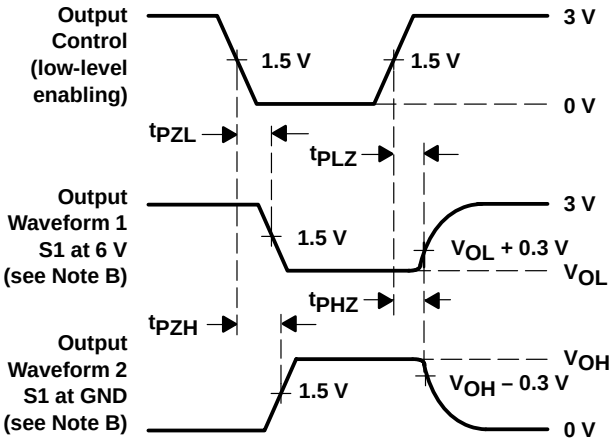

VOLTAGE WAVEFORMS
ENABLE AND DISABLE TIMES

NOTES:
A. C_L includes probe and jig capacitance.
B. Waveform 1 is for an output with internal conditions such that the output is low except when disabled by the output control. Waveform 2 is for an output with internal conditions such that the output is high except when disabled by the output control.
C. All input pulses are supplied by generators having the following characteristics: PRR ≤ 10 MHz, Z_O = 50 Ω, t_r ≤ 2.5 ns, t_f ≤ 2.5 ns.
D. The outputs are measured one at a time with one transition per measurement.
E. t_{PLZ} and t_{PHZ} are the same as t_{dis}.
F. t_{PZL} and t_{PZH} are the same as t_{en}.
G. t_{PLH} and t_{PHL} are the same as t_{pd}.

Figure 2. Load Circuit and Voltage Waveforms

- **5-Ω Switch Connection Between Two Ports**
- **Isolation Under Power-Off Conditions**
- **B-Port Outputs Are Precharged by Bias Voltage to Minimize Signal Distortion During Live Insertion**
- **Package Options Include Plastic Thin Shrink Small-Outline (DGG), Thin Very Small-Outline (DGV), and 300-mil Shrink Small-Outline (DL) Packages**

DGG, DGV, OR DL PACKAGE
(TOP VIEW)

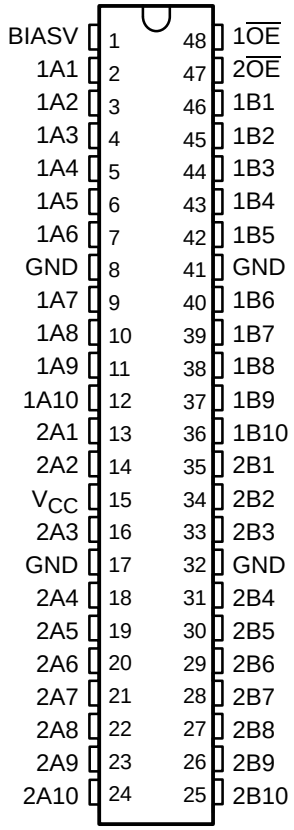

description

The SN74CBTLV16800 provides 20 bits of high-speed bus switching. The low on-state resistance of the switch allows connections to be made with minimal propagation delay. The device also precharges the B port to a user-selectable bias voltage (BIASV) to minimize live-insertion noise.

The device is organized as dual 10-bit bus switches with separate output-enable ($\overline{OE}$) inputs. It can be used as two 10-bit bus switches or one 20-bit bus switch. When $\overline{OE}$ is low, the associated 10-bit bus switch is on and port A is connected to port B. When $\overline{OE}$ is high, the switch is open, a high-impedance state exists between the two ports, and port B is precharged to BIASV through the equivalent of a 10-kΩ resistor.

To ensure the high-impedance state during power up or power down, $\overline{OE}$ should be tied to V_{CC} through a pullup resistor; the minimum value of the resistor is determined by the current-sinking capability of the driver.

The SN74CBTLV16800 is characterized for operation from –40°C to 85°C.

FUNCTION TABLE
(each 10-bit bus switch)

INPUT $\overline{OE}$	FUNCTION
L	A port = B port
H	A port = Z B port = BIASV

PRODUCT PREVIEW

PRODUCT PREVIEW information concerns products in the formative or design phase of development. Characteristic data and other specifications are design goals. Texas Instruments reserves the right to change or discontinue these products without notice.

Copyright © 1998, Texas Instruments Incorporated

PRODUCT PREVIEW

logic diagram (positive logic)

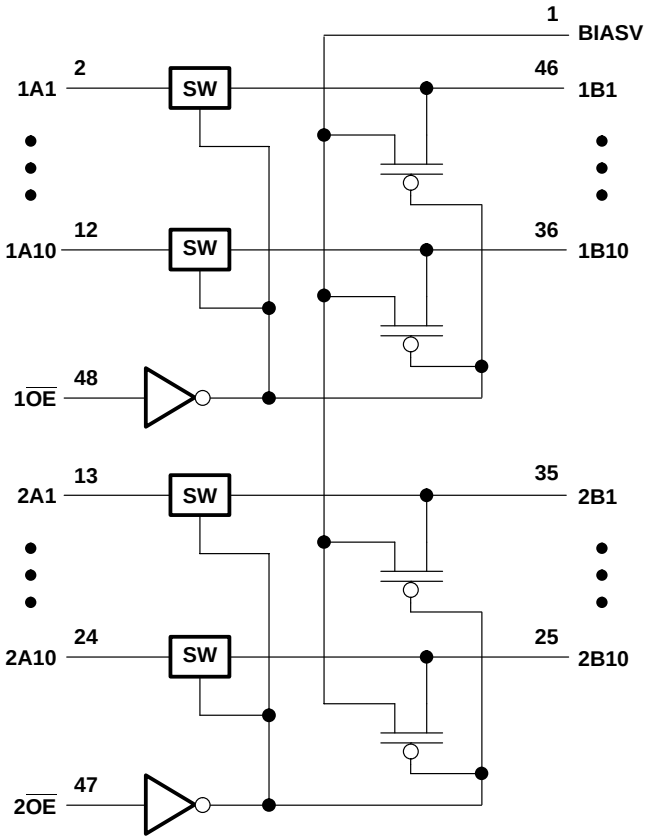

simplified schematic, each FET switch

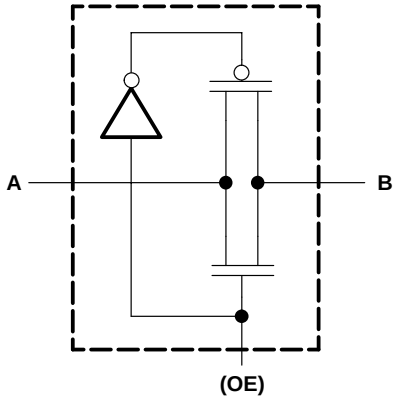

absolute maximum ratings over operating free-air temperature range (unless otherwise noted)†

Supply voltage range, V_{CC} . . . . . –0.5 V to 4.6 V
Bias voltage range, BIASV . . . . . –0.5 V to 4.6 V
Input voltage range, V_I (see Note 1) . . . . . –0.5 V to 4.6 V
Continuous channel current . . . . . 128 mA
Input clamp current, I_{IK} (V_I < 0) . . . . . –50 mA
Package thermal impedance, θ_{JA} (see Note 2): DGG package . . . . . 89°C/W
DGV package . . . . . 93°C/W
DL package . . . . . 94°C/W
Storage temperature range, T_{stg} . . . . . –65°C to 150°C

† Stresses beyond those listed under "absolute maximum ratings" may cause permanent damage to the device. These are stress ratings only, and functional operation of the device at these or any other conditions beyond those indicated under "recommended operating conditions" is not implied. Exposure to absolute-maximum-rated conditions for extended periods may affect device reliability.

NOTES: 1. The input and output negative-voltage ratings may be exceeded if the input and output clamp-current ratings are observed.
2. The package thermal impedance is calculated in accordance with JESD 51.

recommended operating conditions (see Note 3)

			MIN	MAX	UNIT
V_{CC}	Supply voltage		2.3	3.6	V
BIASV	Bias voltage		0	V_{CC}	V
V_{IH}	High-level control input voltage	V_{CC} = 2.3 V to 2.7 V	1.7		V
		V_{CC} = 2.7 V to 3.6 V	2		
V_{IL}	Low-level control input voltage	V_{CC} = 2.3 V to 2.7 V		0.7	V
		V_{CC} = 2.7 V to 3.6 V		0.8	
T_A	Operating free-air temperature		–40	85	°C

NOTE 3: All unused control inputs of the device must be held at V_{CC} or GND to ensure proper device operation. Refer to the TI application report, *Implications of Slow or Floating CMOS Inputs*, literature number SCBA004.

electrical characteristics over recommended operating free-air temperature range (unless otherwise noted)

PARAMETER		TEST CONDITIONS			MIN	TYP‡	MAX	UNIT
V_{IK}		V_{CC} = 3 V,	I_I = –18 mA				–1.2	V
I_I		V_{CC} = 3.6 V,	V_I = V_{CC} or GND				±1	µA
I_{off}		V_{CC} = 0,	V_I or V_O= 0 to 3.6 V				10	µA
I_O		V_{CC} = 3 V,	BIASV = 2.4 V,	V_O= 0	0.25			mA
I_{CC}		V_{CC} = 3.6 V,	I_O = 0,	V_I = V_{CC} or GND			10	µA
ΔI_{CC}§	Control inputs	V_{CC} = 3.6 V,	One input at 3 V,	Other inputs at V_{CC} or GND			300	µA
C_i	Control inputs	V_I = 3 V or 0						pF
$C_{o(OFF)}$		V_O = 3 V or 0,	Switch off					pF
r_{on}¶		V_{CC} = 2.3 V, TYP at V_{CC} = 2.5 V	V_I = 0	I_I = 64 mA				Ω
				I_I = 24 mA				
			V_I = 1.7 V,	I_I = 15 mA				
		V_{CC} = 3 V	V_I = 0	I_I = 64 mA				
				I_I = 24 mA				
			V_I = 2.4 V,	I_I = 15 mA				

‡ All typical values are at V_{CC} = 3.3 V (unless otherwise noted), T_A = 25°C.
§ This is the increase in supply current for each input that is at the specified voltage level rather than V_{CC} or GND.
¶ Measured by the voltage drop between the A and B terminals at the indicated current through the switch. On-state resistance is determined by the lower of the voltages of the two (A or B) terminals.

PRODUCT PREVIEW

PRODUCT PREVIEW

switching characteristics over recommended operating free-air temperature range (unless otherwise noted) (see Figures 1 and 2)

PARAMETER	TEST CONDITIONS	FROM (INPUT)	TO (OUTPUT)	V_{CC} = 2.5 V ± 0.2 V		V_{CC} = 3.3 V ± 0.3 V		UNIT
				MIN	MAX	MIN	MAX	
t_{pd}†		A or B	B or A					ns
t_{PZH}	BIASV = GND	$\overline{OE}$	A or B					ns
t_{PZL}	BIASV = 3 V							
t_{PHZ}	BIASV = GND	$\overline{OE}$	A or B					ns
t_{PLZ}	BIASV = 3 V							

† The propagation delay is the calculated RC time constant of the typical on-state resistance of the switch and the specified load capacitance, when driven by an ideal voltage source (zero output impedance).

PARAMETER MEASUREMENT INFORMATION
V_{CC} = 2.5 V ± 0.2 V

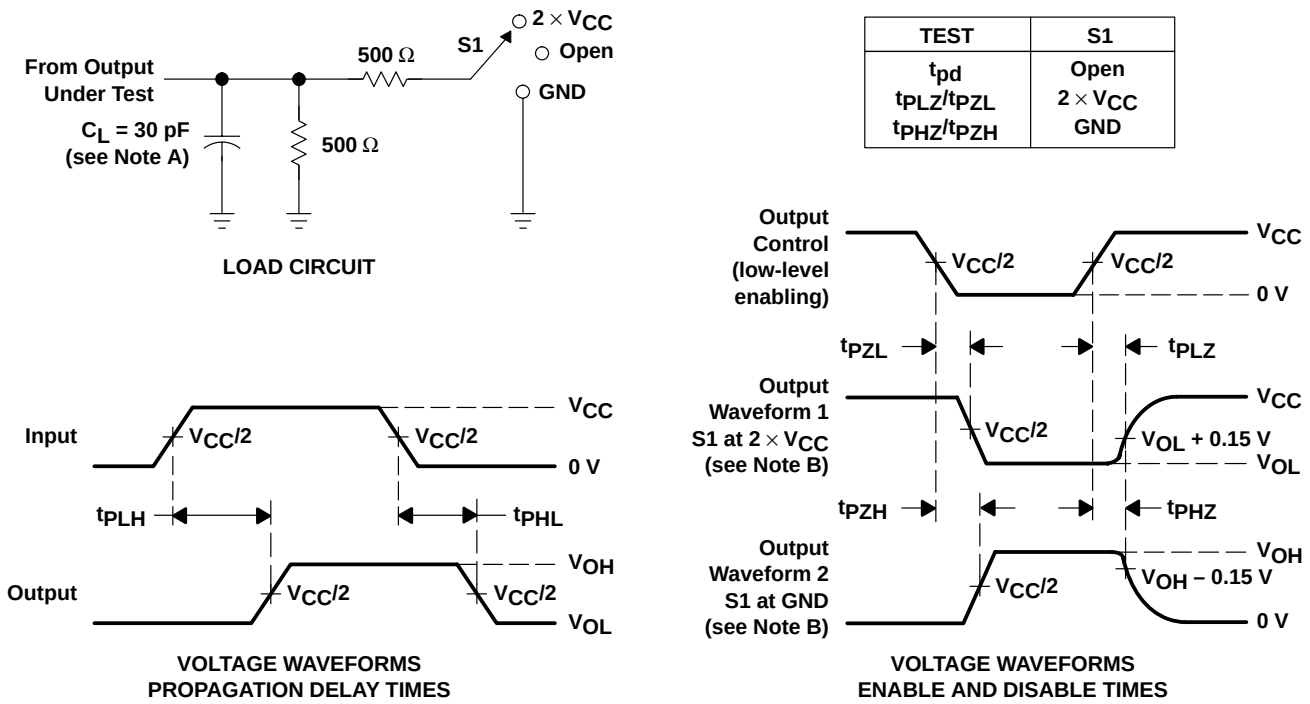

TEST	S1
t_{pd}	Open
t_{PLZ}/t_{PZL}	2 × V_{CC}
t_{PHZ}/t_{PZH}	GND

NOTES: A. C_L includes probe and jig capacitance.
B. Waveform 1 is for an output with internal conditions such that the output is low except when disabled by the output control. Waveform 2 is for an output with internal conditions such that the output is high except when disabled by the output control.
C. All input pulses are supplied by generators having the following characteristics: PRR ≤ 10 MHz, Z_O = 50 Ω, t_r ≤ 2 ns, t_f ≤ 2 ns.
D. The outputs are measured one at a time with one transition per measurement.
E. t_{PLH} and t_{PHL} are the same as t_{pd}.

Figure 1. Load Circuit and Voltage Waveforms

PARAMETER MEASUREMENT INFORMATION
V_{CC} = 3.3 V ± 0.3 V

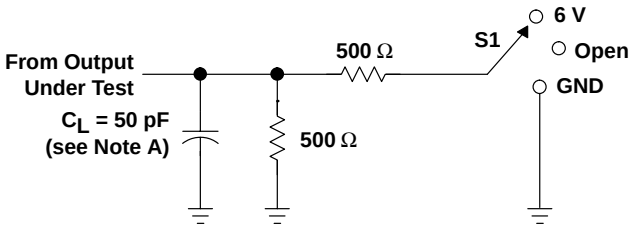

LOAD CIRCUIT

TEST	S1
t_{pd}	Open
t_{PLZ}/t_{PZL}	6 V
t_{PHZ}/t_{PZH}	GND

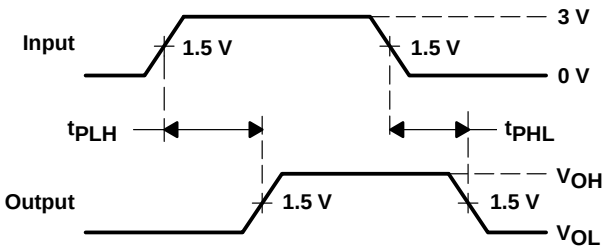

VOLTAGE WAVEFORMS
PROPAGATION DELAY TIMES

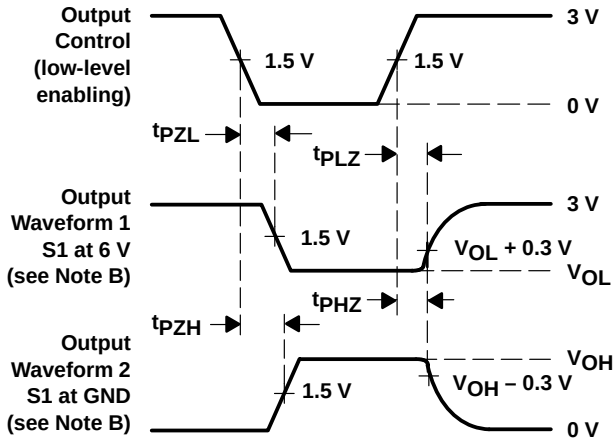

VOLTAGE WAVEFORMS
ENABLE AND DISABLE TIMES

NOTES:
A. C_L includes probe and jig capacitance.
B. Waveform 1 is for an output with internal conditions such that the output is low except when disabled by the output control. Waveform 2 is for an output with internal conditions such that the output is high except when disabled by the output control.
C. All input pulses are supplied by generators having the following characteristics: PRR ≤ 10 MHz, Z_O = 50 Ω, t_r ≤ 2.5 ns, t_f ≤ 2.5 ns.
D. The outputs are measured one at a time with one transition per measurement.
E. t_{PLZ} and t_{PHZ} are the same as t_{dis}.
F. t_{PZL} and t_{PZH} are the same as t_{en}.
G. t_{PLH} and t_{PHL} are the same as t_{pd}.

Figure 2. Load Circuit and Voltage Waveforms

PRODUCT PREVIEW

General Information 1
CBT Single Gates 2
CBT (2 to 10 Bit) 3
CBT Widebus™ 4
CBT With Integrated Diodes 5
CBTLV Single Gates 6
CBTLV (2 to 10 Bit) 7
CBTLV Widebus™ 8
Application Reports 9
Mechanical Data 10

Contents

	Page
Texas Instruments Crossbar Switches	9–3
SN74CBTS3384 Bus Switches Provide Fast Connection and Ensure Isolation	9–13
5-V to 3.3-V Translation With the SN74CBTD3384	9–21
Implications of Slow or Floating CMOS Inputs	9–29
3.3-V to 2.5-V Translation With Texas Instruments Crossbar Technology	9–45

Texas Instruments Crossbar Switches

SCDA001A
July 1995

TEXAS INSTRUMENTS

IMPORTANT NOTICE

Texas Instruments (TI) reserves the right to make changes to its products or to discontinue any semiconductor product or service without notice, and advises its customers to obtain the latest version of relevant information to verify, before placing orders, that the information being relied on is current.

TI warrants performance of its semiconductor products and related software to the specifications applicable at the time of sale in accordance with TI's standard warranty. Testing and other quality control techniques are utilized to the extent TI deems necessary to support this warranty. Specific testing of all parameters of each device is not necessarily performed, except those mandated by government requirements.

Certain applications using semiconductor products may involve potential risks of death, personal injury, or severe property or environmental damage ("Critical Applications").

TI SEMICONDUCTOR PRODUCTS ARE NOT DESIGNED, INTENDED, AUTHORIZED, OR WARRANTED TO BE SUITABLE FOR USE IN LIFE-SUPPORT APPLICATIONS, DEVICES OR SYSTEMS OR OTHER CRITICAL APPLICATIONS.

Inclusion of TI products in such applications is understood to be fully at the risk of the customer. Use of TI products in such applications requires the written approval of an appropriate TI officer. Questions concerning potential risk applications should be directed to TI through a local SC sales office.

In order to minimize risks associated with the customer's applications, adequate design and operating safeguards should be provided by the customer to minimize inherent or procedural hazards.

TI assumes no liability for applications assistance, customer product design, software performance, or infringement of patents or services described herein. Nor does TI warrant or represent that any license, either express or implied, is granted under any patent right, copyright, mask work right, or other intellectual property right of TI covering or relating to any combination, machine, or process in which such semiconductor products or services might be or are used.

Copyright © 1995, Texas Instruments Incorporated

Contents

Title *Page*

What Are Texas Instruments Crossbar Switches? **9–7**

Bus Switches Provide 5-V to 3-V Translation When 3-V Supply Line Is Not Provided **9–9**

Bus Switches Can Be Used to Replace Drivers and Transceivers in Bus Applications **9–9**

Bus Switches Convert TTL Logic to Hot Card-Insertion Capability **9–10**

Conclusion **9–11**

Acknowledgment **9–11**

List of Illustrations

Figure *Title* *Page*

1 Output Voltage Versus Supply Voltage 9–7

2 Output Voltage Versus Input Voltage 9–7

3 On-State Resistance Versus Input Voltage 9–8

4 5-V TTL to 3-V TTL Translator System 9–9

5 ACL Direction of Current Flow When V_{CC} = 0 V 9–10

6 No ABT Current Flow When V_{CC} = 0 V 9–10

7 Hot Card-Insertion Application 9–11

8 Power-Up High-Impedance State With CBT 9–11

What Are Texas Instruments Crossbar Switches?

Crossbar switches are high-speed bus-connect devices. Each switch consists of an n-channel MOS transistor driven by a CMOS gate. When enabled, the n-channel transistor gate is pulled to V_{CC} and the switch is on. These devices have an on-state resistance of approximately 5 Ω and a propagation delay of 250 ps. They are capable of conducting a current of 64 mA each. The transistor clamps the output at ≈1 V less than the gate potential, regardless of the level at the input pin. This is one of the n-channel transistor characteristics (see Figures 1 and 2). Note the ≈1-V difference between the gate (V_{CC}) and the source (V_O) at any point on the graph.

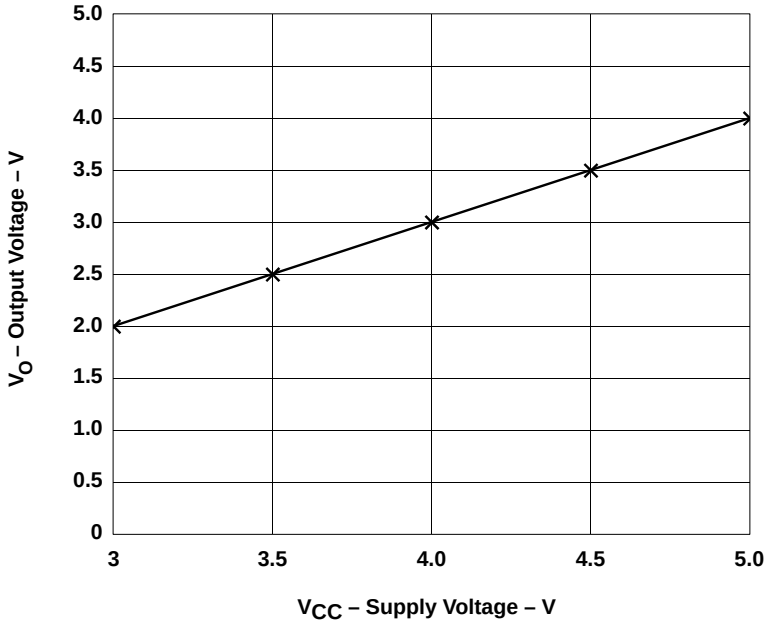

Figure 1. Output Voltage Versus Supply Voltage

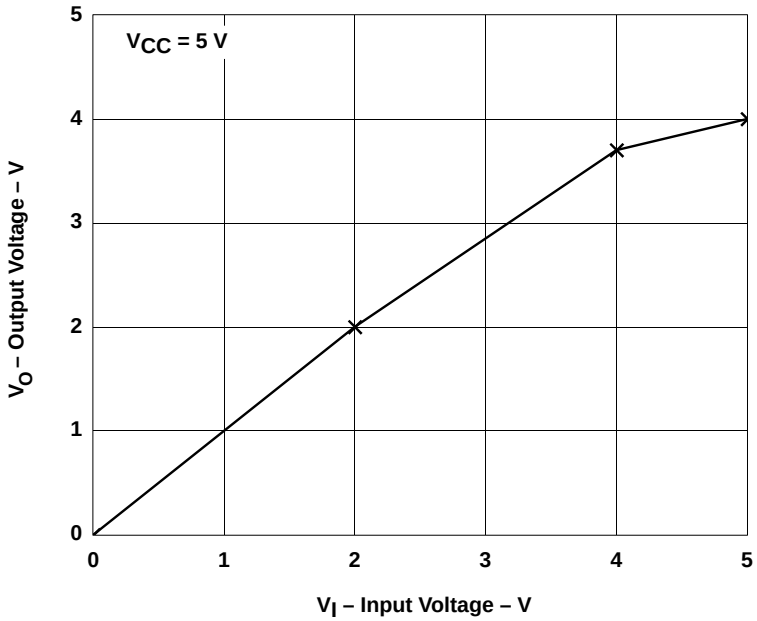

Figure 2. Output Voltage Versus Input Voltage

The on-state resistance (r_{on}) increases gradually with V_I until V_I approaches $V_{CC} - 1$ V, where r_{on} rapidly increases, clamping V_O at $V_{CC} - 1$ V (see Figure 3). Also, by the nature of the n-channel transistor design, the input and output terminals are fully isolated when the transistor is off. Leakage and capacitance are to ground and not between input and output, which minimizes feedthrough when the transistor is off.

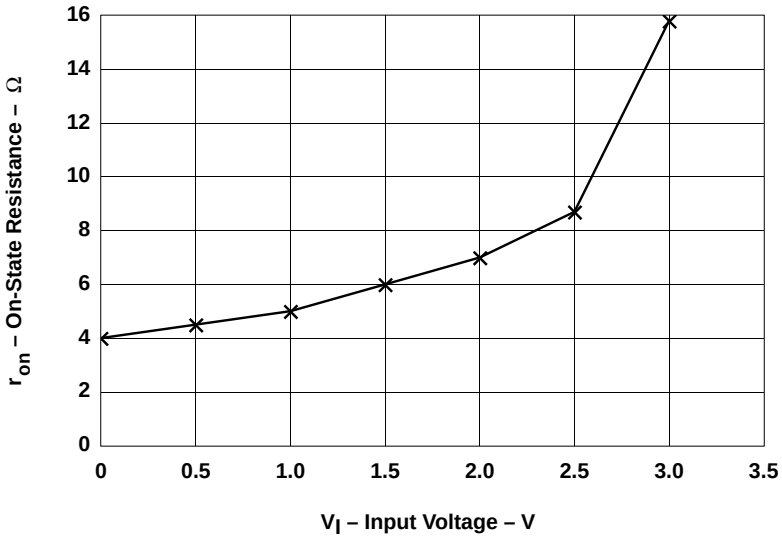

Figure 3. On-State Resistance Versus Input Voltage

Bus Switches Provide 5-V to 3-V Translation When 3-V Supply Line Is Not Provided

These devices also can provide bidirectional 5-V to 3-V translation with minimal propagation delay or direction control, using only a 5-V supply line and a diode. Figure 4 illustrates this application. A 4.3-V V_{CC} can be created by placing a diode between V_{CC} and the switch. This causes gate voltage of 4.3 V due to the diode drop of approximately 0.7 V. This drop, coupled with the gate-to-source drop of 1 V, brings V_O to a maximum 3.3-V level that can be used to drive a signal in a 3-V environment.

These devices consume very little current (I_{CC} = 3 µA). This current is not satisfactory for the diode to operate. Using a resistor from the cathode of the diode to GND allows more current from the supply voltage, causing the diode to operate and to clamp at the specified 4.3 V (see Figure 4). The recommended value of the resistor is 1 kΩ or less.

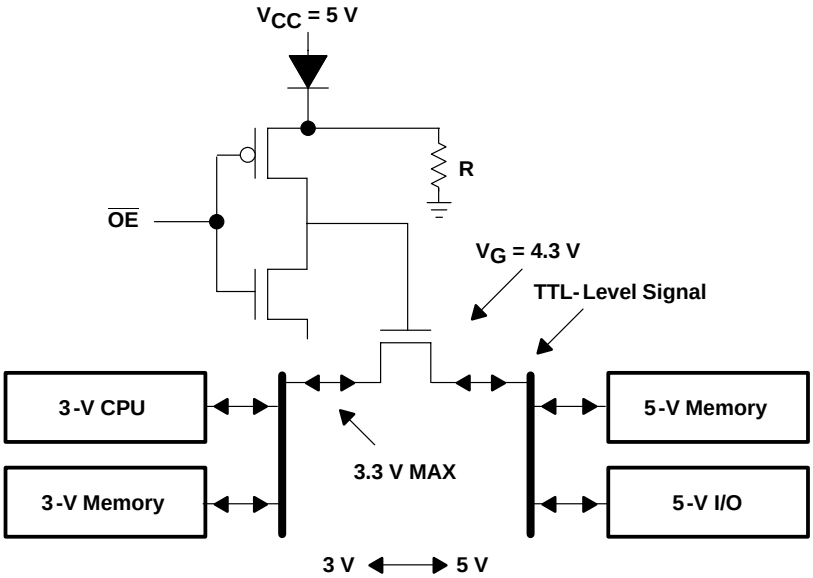

Figure 4. 5-V TTL to 3-V TTL Translator System

Bus Switches Can Be Used to Replace Drivers and Transceivers in Bus Applications

Bus switches introduce near-zero propagation delay. They can replace drivers and transceivers in systems in which signal buffering is not required. They can be used in a multiprocessor system as a fast bus connect, or they can be used as a bus-exchange switch for crossbar systems, ping-pong memory connect, or bus-byte swap. These devices also can replace relays that are used in automated test equipment (ATE) to connect or disconnect load resistors in negligible time with the same low on-state resistance and without relay-reliability problems.

Bus Switches Convert TTL Logic to Hot Card-Insertion Capability

This application is used mostly in systems that require hot card insertion or removal of cards without disturbing or loading down the bus. These systems are designed to run continuously and cannot be shut down for any reason, such as telephone switches, manufacturing controls, real-time transaction systems, and airline-reservation networks. These systems/cards use some logic families like ACL, HCMOS, etc., which do not provide isolation from the bus when power is partially removed, causing system error. Also, connectors are designed so that the ground pins are connected first, followed by the signal pins, then V_{CC} last. In this condition, the existing logic must ensure that the I/O signals do not disturb or load down the bus. This assurance cannot be achieved using CMOS logic since it contains p-channel transistors that provide an inherent diode between the I/O pins and V_{CC}. The diode is forward biased when driven above V_{CC} (see Figure 5). In a situation where V_{CC} is disconnected, these diodes are capable of pulling the system bus to approximately one diode drop above ground, leaving the bus disturbed.

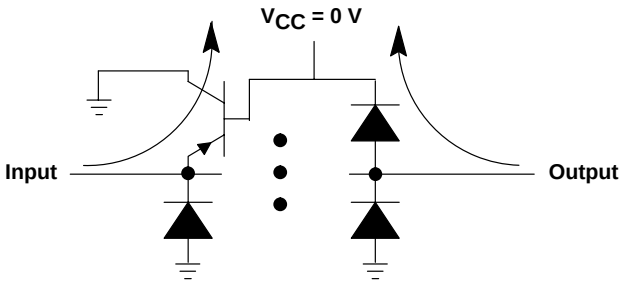

Figure 5. ACL Direction of Current Flow When V_{CC} = 0 V

Another issue to consider is that, when V_{CC} is ramping, but still below the device-operating voltage, the logic should ensure that the outputs are in the high-impedance state and that the bus is totally isolated until the card is ready for operation. Finally, the capacitance of the card must be seen by the system bus as low as possible so that when the card is inserted and the capacitance is charged up, disturbance or bus error does not occur.

There are two solutions to this problem; one is to use Texas Instruments BiCMOS technology (BCT) or advanced BiCMOS technology (ABT) families, since both ensure the input and output to be off when V_{CC} is removed due to the absence of the clamping diodes to V_{CC} (see Figure 6). They also provide an active circuit that ensures the output to be in the high-impedance state during part of the V_{CC} power up or power down.

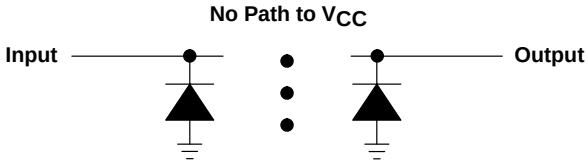

Figure 6. No ABT Current Flow When V_{CC} = 0 V

The second solution is to use the Texas Instruments CBT family. This can be done by placing the switch between the card logic and the connector to serve as an isolator when power is removed. The switch uses an n channel that prevents the current from flowing into the switch when powered down (see Figure 7). One device in particular, the SN74CBT6800, is designed specifically for hot card insertion. It has a built-in channel pullup tied to a bias voltage (BIASV) that is provided to ensure power up with the buses not connected. Other devices can be used in the same manner, however, to ensure the high-impedance state during power up or power down. The enable pins of the switch should be tied to V_{CC} through a pullup resistor. The minimum value of the resistor is determined by the current-sinking capability of the driver (see Figure 8).

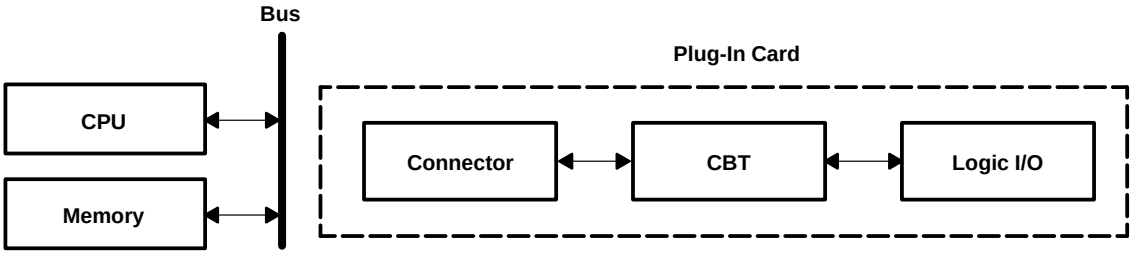

Figure 7. Hot Card-Insertion Application

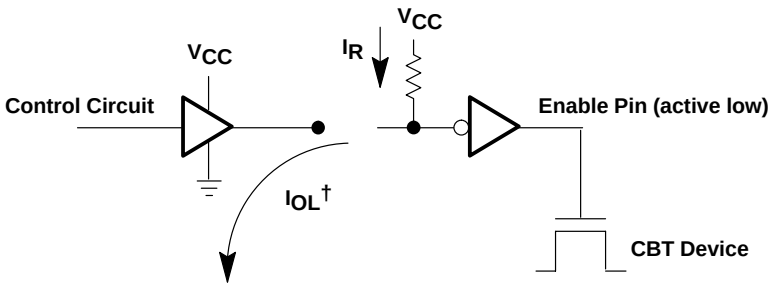

† $I_{OL} > I_R$, so the control signal can override the pullup resistor.

Figure 8. Power-Up High-Impedance State With CBT

Conclusion

Texas Instruments crossbar switches can be used in several applications. Although they are simple n-channel transistors, they are capable of providing several important bus functions, such as hot card insertion, near-zero-delay communication, 5-V to 3-V translation, and memory management in multiprocessor environments.

Acknowledgment

The author of this document is Ramzi Ammar.

SN74CBTS3384 Bus Switches Provide Fast Connection and Ensure Isolation

SCDA002A
August 1996

TEXAS INSTRUMENTS

IMPORTANT NOTICE

Texas Instruments (TI) reserves the right to make changes to its products or to discontinue any semiconductor product or service without notice, and advises its customers to obtain the latest version of relevant information to verify, before placing orders, that the information being relied on is current.

TI warrants performance of its semiconductor products and related software to the specifications applicable at the time of sale in accordance with TI's standard warranty. Testing and other quality control techniques are utilized to the extent TI deems necessary to support this warranty. Specific testing of all parameters of each device is not necessarily performed, except those mandated by government requirements.

Certain applications using semiconductor products may involve potential risks of death, personal injury, or severe property or environmental damage ("Critical Applications").

TI SEMICONDUCTOR PRODUCTS ARE NOT DESIGNED, INTENDED, AUTHORIZED, OR WARRANTED TO BE SUITABLE FOR USE IN LIFE-SUPPORT APPLICATIONS, DEVICES OR SYSTEMS OR OTHER CRITICAL APPLICATIONS.

Inclusion of TI products in such applications is understood to be fully at the risk of the customer. Use of TI products in such applications requires the written approval of an appropriate TI officer. Questions concerning potential risk applications should be directed to TI through a local SC sales office.

In order to minimize risks associated with the customer's applications, adequate design and operating safeguards should be provided by the customer to minimize inherent or procedural hazards.

TI assumes no liability for applications assistance, customer product design, software performance, or infringement of patents or services described herein. Nor does TI warrant or represent that any license, either express or implied, is granted under any patent right, copyright, mask work right, or other intellectual property right of TI covering or relating to any combination, machine, or process in which such semiconductor products or services might be or are used.

Copyright © 1996, Texas Instruments Incorporated

Contents

Title	*Page*
Introduction	**9–17**
The Mechanics of the MOSFET Switch Leading to False Switching	**9–17**
Disruption of the Bus	**9–18**
The SN74CBTS3384 Solution	**9–19**
Conclusion	**9–20**
Acknowledgment	**9–20**

List of Illustrations

Figure	*Title*	*Page*
1	The SN74CBTS3384 With Schottky Diodes Attached at Both Ports	9–17
2	Switching Mechanics of the NMOS Switch	9–17
3	Mechanics Behind False Switching	9–18
4	The Effect of Bus Interruption on Data Flow and Signal Integrity	9–18
5	Test Conditions of the SN74CBTS3384 With Switch Disabled	9–19
6	V_O Versus V_I of the SN74CBTS3384 and a SN74CBT3384A in the Disabled State	9–19
7	Input Current Versus V_I of SN74CBTS3384 in the Disabled State	9–20

Introduction

Buses are the pathways for communication between the CPU, memory, and I/O ports in electronic systems. Today's standards demand both fast connection as well as isolation of these buses. Bus switches are usually used to address these demands because the use of a single MOSFET provides negligible propagation delay, low power dissipation and bidirectional switching; however, the use of a single transistor also can allow large negative undershoots below –1 V to cause unwanted switching and possible disruption of the bus. To prevent this problem from occurring, the SN74CBTS3384 bus switches are developed with Schottky diodes at the inputs that clamp any undershoot to approximately –300 mV (see Figure 1).

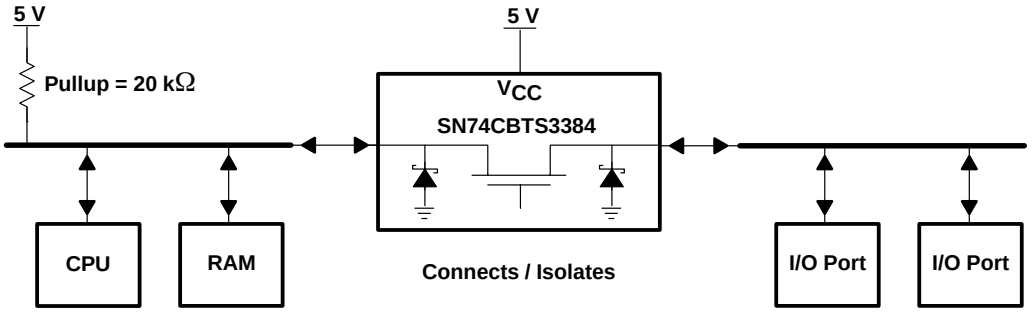

Figure 1. The SN74CBTS3384 With Schottky Diodes Attached at Both Ports

The Mechanics of the MOSFET Switch Leading to False Switching

The MOSFET is used for bus switches because of its enabling and disabling speed, its low on-state resistance, and its high off-state resistance. The substrate of the N-channel MOSFET is grounded and the two n-type doped regions are interchangeable. As shown in Figure 2, when a logic high is applied to the gate, the region with a voltage of 1V or more below the gate becomes the source and the other region the drain. At this point, the switch turns fully on and a signal flows from the input side. While this physical structure of the MOSFET provides bidirectional capability in a switch, it also allows large negative undershoots on either port to turn on a disabled switch.

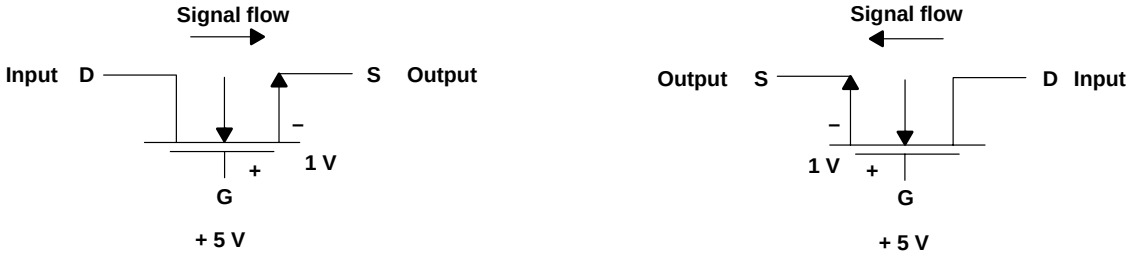

The interchangeability of the source and drain provides bidirectional signal flow.

Figure 2. Switching Mechanics of the NMOS Switch

As Figure 3 shows, even though the switch is initially disabled and there is a logic low at the gate, large negative undershoots at the input cause the existing clamping diode to clamp to approximately –650 mV. Since this voltage is parallel to the gate-to-source voltage of the transistor and lasts for a few nanoseconds, the transistor starts conducting a certain amount of current. This causes a logic low to appear on the bus and disrupts any signals on it.

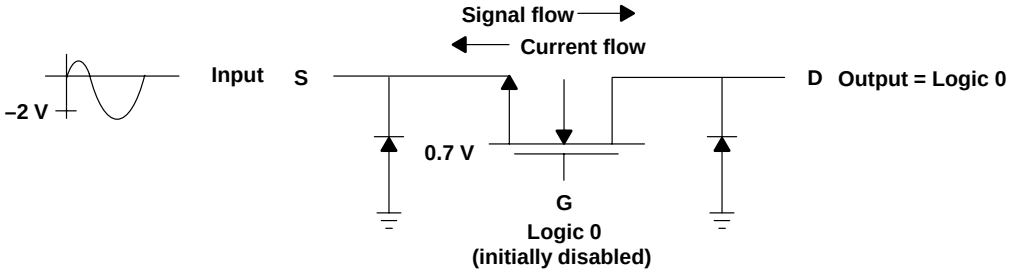

Output enable ($\overline{OE}$) is high, but large negative undershoot causes NMOS switch to turn on.

Figure 3. Mechanics Behind False Switching

Disruption of the Bus

False switching can disrupt the bus in many ways. Bus switches connect two buses or several components on a bus when on, and isolates them when off. Because each component has a certain amount of capacitance, an unexpected connection loads the bus with additional capacitance. Under normal circumstances, a signal is given enough drive to charge the expected capacitance on the bus and then switch voltage levels at the receiver. A signal propagating on the disrupted line may not have enough drive to overcome the additional load capacitance. In fact, the logic low introduced to the bus by the false connection can absorb some of the drive current from the signal. In any case, the end result is signal weakening, loss of speed, and failure to switch voltage levels at the receiver. Figure 4A shows a transaction between a CPU and a RAM chip connected by switches A and B. When switch C is off, the data flow is uninterrupted. As shown in Figure 4B, switch C can turn on unexpectedly and connect the I/O port to the bus. This results in signal degradation and data loss.

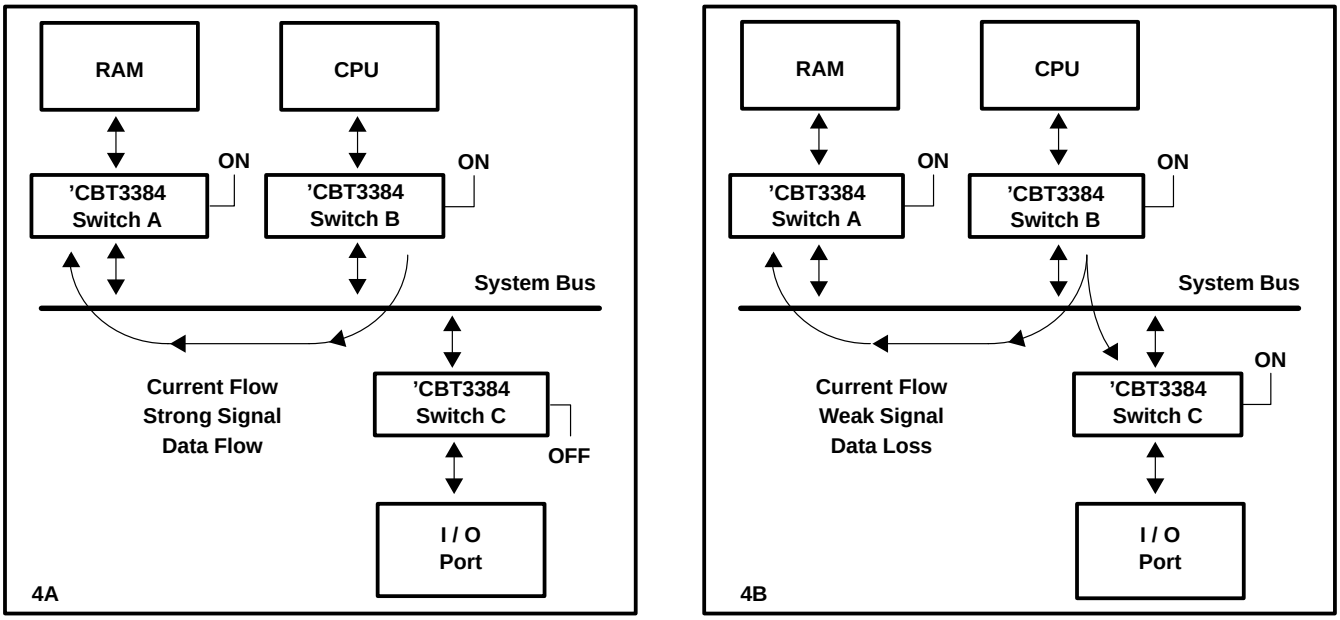

Uninterrupted data flow from CPU to RAM **Resulting bus interruption and data loss**

Figure 4. The Effect of Bus Interruption on Data Flow and Signal Integrity

False switching also can cause bus contention, a case occurring when two or more transmitters on a bus are active at the same time. If the logic levels of these outputs are different, a high current flows on the line, possibly damaging the line or the components connected to it. These problems can cause serious setbacks to the high performance and reliability demands of today's systems. The use of the SN74CBTS3384 bus switch helps prevent false switching and addresses many of these problems.

The SN74CBTS3384 Solution

The SN74CBTS3384 utilizes Schottky diode at the inputs to clamp undershoot to about 300 mV below ground (see Figure 5). With the gate grounded in the disabled state, the Schottky diode prevents the gate-to-source voltage from exceeding the threshold voltage of the NMOS transistor, thus preventing weak enabling. In addition, a disabled SN74CBTS3384 switch offers a very low capacitance of about 6 pF and very low leakage current. Figure 5 shows total leakage current of only 2 µA. As a result, the disabled SN74CBTS3384 bus switch succeeds in isolating its output from any unwanted undershoots at the input. The buses are left uninterrupted and the signals on the buses are not disturbed.

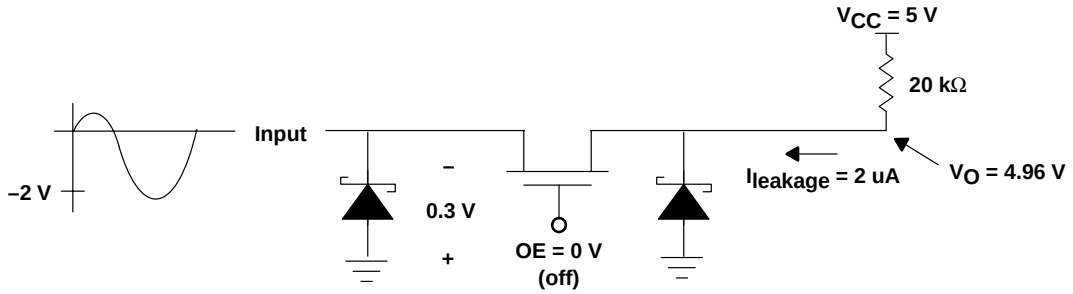

Test conditions showing output isolation

Figure 5. Test Conditions of the SN74CBTS3384 With Switch Disabled

Figure 6 shows the output of a disabled SN74CBT3384A (without Schottky diodes) as it turns on and follows the input to a negative level. This level is low enough to possibly disrupt the bus. Figure 6 also shows the SN74CBTS3384 where the Schottky diode prevents any switching throughout the wide input sweep and keeps the output at a steady level. Figure 7 shows the input current of the SN74CBTS3384 as the Schottky diode turns on, conducting about 10 mA from ground.

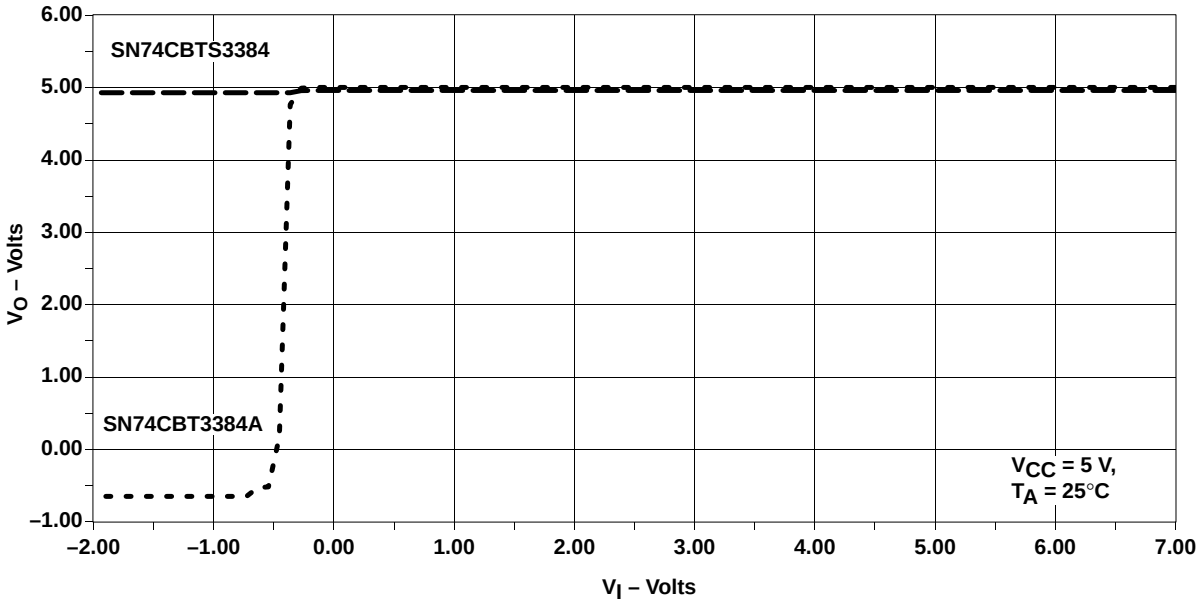

Figure 6. V_O vs V_I of the SN74CBTS3384 and a SN74CBT3384A in the Disabled State

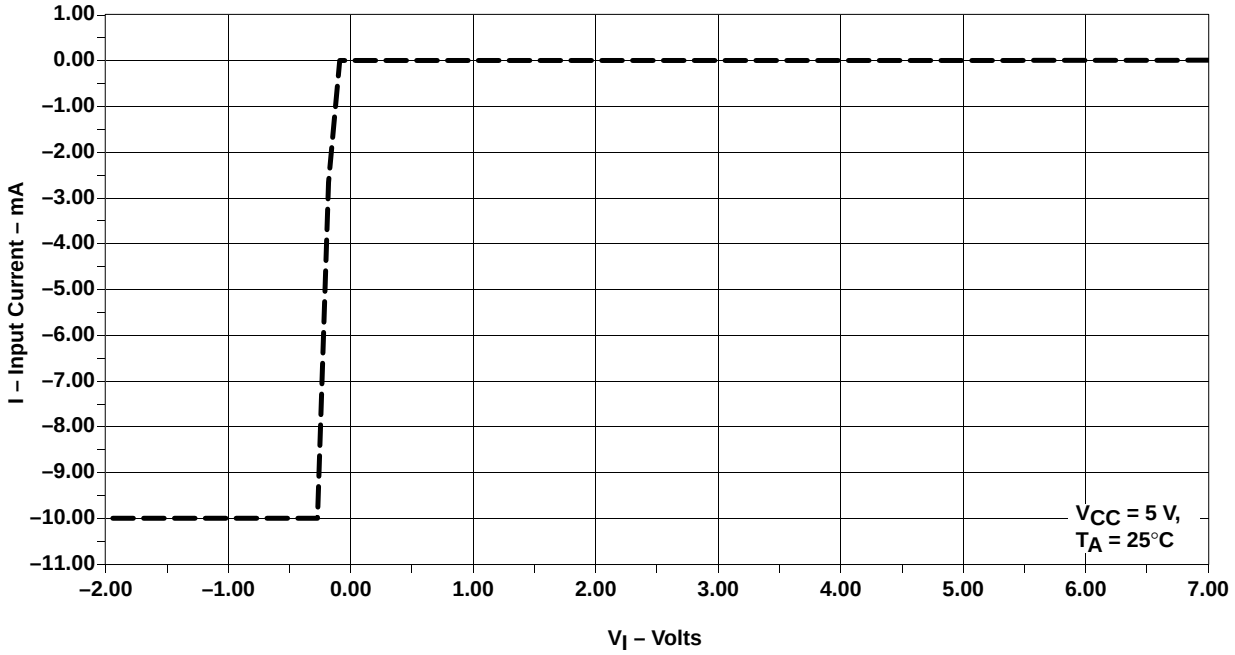

Figure 7. Input Current vs V_I of SN74CBTS3384 in the Disabled State

Conclusion

The SN74CBTS3384 bus switch provides a high-speed, low-power solution to bus connection, while providing a reliable solution to bus isolation. As a result, buses function properly without any problematic interruptions and the high-performance demands of today's systems are easily reached.

Acknowledgment

The author of this report is Nalin Yogasundram.

5-V to 3.3-V Translation With the SN74CBTD3384

SCDA003B
March 1997

TEXAS INSTRUMENTS

IMPORTANT NOTICE

Texas Instruments (TI) reserves the right to make changes to its products or to discontinue any semiconductor product or service without notice, and advises its customers to obtain the latest version of relevant information to verify, before placing orders, that the information being relied on is current.

TI warrants performance of its semiconductor products and related software to the specifications applicable at the time of sale in accordance with TI's standard warranty. Testing and other quality control techniques are utilized to the extent TI deems necessary to support this warranty. Specific testing of all parameters of each device is not necessarily performed, except those mandated by government requirements.

Certain applications using semiconductor products may involve potential risks of death, personal injury, or severe property or environmental damage ("Critical Applications").

TI SEMICONDUCTOR PRODUCTS ARE NOT DESIGNED, INTENDED, AUTHORIZED, OR WARRANTED TO BE SUITABLE FOR USE IN LIFE-SUPPORT APPLICATIONS, DEVICES OR SYSTEMS OR OTHER CRITICAL APPLICATIONS.

Inclusion of TI products in such applications is understood to be fully at the risk of the customer. Use of TI products in such applications requires the written approval of an appropriate TI officer. Questions concerning potential risk applications should be directed to TI through a local SC sales office.

In order to minimize risks associated with the customer's applications, adequate design and operating safeguards should be provided by the customer to minimize inherent or procedural hazards.

TI assumes no liability for applications assistance, customer product design, software performance, or infringement of patents or services described herein. Nor does TI warrant or represent that any license, either express or implied, is granted under any patent right, copyright, mask work right, or other intellectual property right of TI covering or relating to any combination, machine, or process in which such semiconductor products or services might be or are used.

Copyright © 1997, Texas Instruments Incorporated

Contents

Title	*Page*
Introduction	**9–25**
The Need for 5-V to 3.3-V Translation	**9–25**
The Mechanics of 5-V to 3.3-V Translation	**9–26**
SN74CBTD3384 Improves Upon Existing Methods for 5-V to 3.3-V Translation	**9–26**
Conclusion	**9–28**
Acknowledgment	**9–28**

List of Illustrations

Figure	*Title*	*Page*
1	The SN74CBTD3384 Bus Switch Provides 5-V to 3.3-V Translation and Bidirectional Switching	9–25
2	Comparison of 5-V and 3.3-V Interface Levels	9–25
3	NMOS Switch of SN74CBTD3384 With Maximum V_O of 3.5 V	9–26
4	V_O Versus V_I of SN74CBT3384A, SN74CBT3384A With 1N916 External Diode, and SN74CBTD3384	9–27
5	V_O Versus V_{CC} of the SN74CBTD3384	9–27

Introduction

The emergence of low-voltage technology has required existing 5-V systems to interact with 3.3-V systems. Issues concerning compatibility of the two systems in mixed-mode operation have created the need for 5-V to 3.3-V translation. Buffers and transceivers serve as effective translators. While providing additional drive, these devices also add propagation delay and require directional control. In cases where additional drive is not required, the solution that provides 5-V to 3.3-V translation, in addition to negligible propagation delay, lower power dissipation, and bidirectional bus switching, is the SN74CBTD3384 bus switch. The SN74CBTD3384 uses the inherent voltage drop of its MOSFET switch, coupled with an internal diode from V_{CC} to provide the necessary 5-V to 3.3-V translation (see Figure 1).

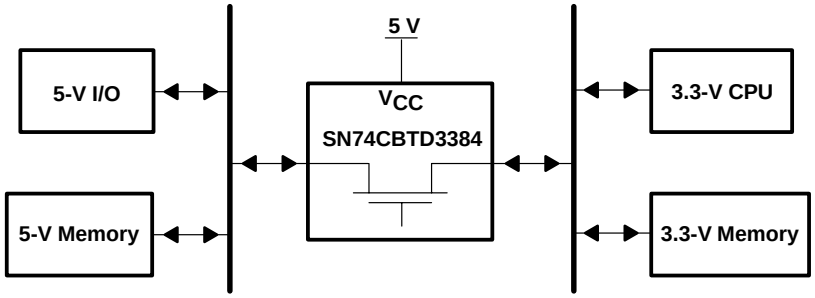

Figure 1. The SN74CBTD3384 Bus Switch Provides 5-V to 3.3-V Translation and Bidirectional Switching

The Need for 5-V to 3.3-V Translation

To realize the need for 5-V to 3.3-V translation, the I/O specifications for mixed-mode operation must be understood. Devices operating in this mode must have TTL-compatible output levels and be able to accept up to 5.5 V at the input. Figure 2 shows various interface levels for 5-V and 3.3-V families. While many 5-V and 3.3-V logic families have been designed with TTL-compatible interface levels and 5-V input tolerance, some CMOS families lack these features. Some 5-V CMOS outputs drive to 5 V; however, certain 3.3-V CMOS inputs do not tolerate 5 V. It is the incompatibility of the described input and output structures that creates the need for 5-V to 3.3-V translation.

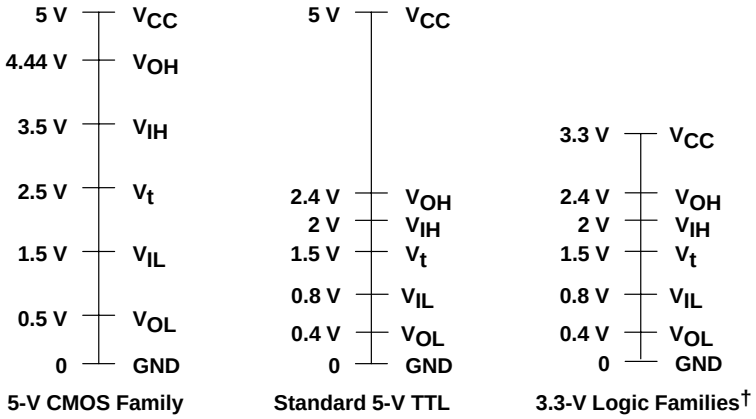

† In accordance with JEDEC Standard 8-A for LV interface levels

Figure 2. Comparison of 5-V and 3.3-V Interface levels

The Mechanics of 5-V to 3.3-V Translation

The CBT bus switches consist of an N-channel MOSFET with its drain and source connected from input to output. The nominal value of the threshold of the MOSFET is 1 V. The MOSFET (Pass transistor) is on when the gate-to-source voltage (V_g) exceeds 1 V. A V_{CC} of 5 V connected to the gate, and a gate-to-source voltage drop of 1 V results in a maximum source voltage of about 4 V. This source voltage limitation, coupled with the transistor's typical on-state resistance of 5 Ω, gives the switch both 5-V to 4-V translation and low propagation delay. If the gate voltage is reduced lower than V_{CC}, the source will be limited to a voltage lower than 4 V. As shown in Figure 3, the SN74CBTD3384 has a diode from V_{CC} to the rest of the circuit. This diode voltage drop is 0.7 V from V_{CC}, which leads to 4.3 V at the gate of the Pass transistor. With the additional 1-V drop from gate to source, the typical output of the SN74CBTD3384 is 3.3 V. Additional diodes can be added to limit the output to even lower voltages. It is important to note that in some cases, the quiescent current (I_{CC}) flowing through the diode may not be enough to turn on the diode. A resistor (R) is added to ground to ensure enough bias current through the diode. The bidirectional nature of the switch is not sacrificed in this translation. A logic high from a 3.3-V device is relayed to the output untranslated. A 5-V receiver with TTL-compatible interface levels reads this signal as a valid high.

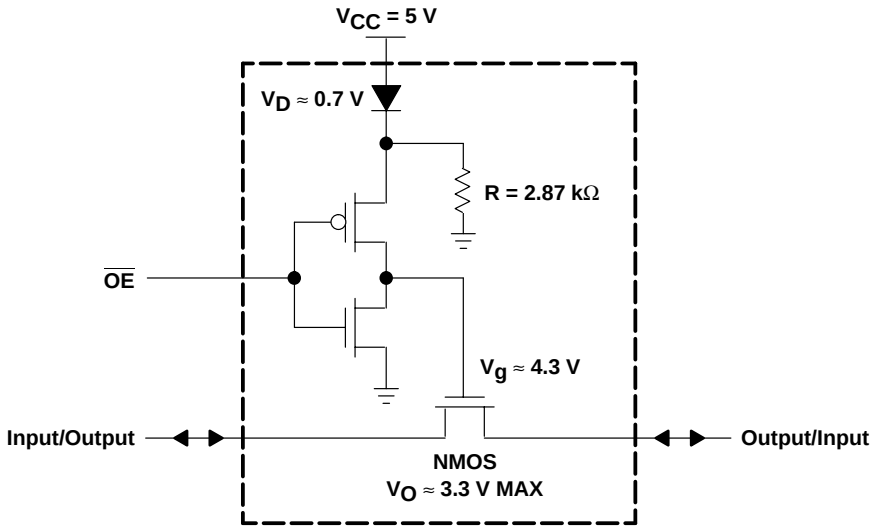

Figure 3. NMOS Switch of SN74CBTD3384 With Maximum V_O of 3.5 V

SN74CBTD3384 Improves Upon Existing Methods for 5-V to 3.3-V Translation

An existing practice for 5-V to 3.3-V translation using a bus switch involves the diode external to the chip. For most purposes, this method provides a quick, effective solution for voltage reduction. But, with increased use of low-voltage technology, the use of smaller, more reliable parts becomes an important issue. The SN74CBTD3384 addresses this issue by integrating the diode and resistor internally into the chip. As a result, board space is reduced and the cost of external components is eliminated. The integration of the components into one chip also eliminates extra solder connections and makes testing easier. Noise sensitivity is decreased, as well as the chance of false switching. The modified control input threshold of the SN74CBTD3384 compensates for the diode drop from V_{CC} and retains the normal 5-V TTL input threshold. This further reduces the noise problem. As demonstrated by the preceding factors, the SN74CBTD3384 offers increased reliability.

Figure 4 shows a comparison between the SN74CBT3384A, SN74CBT3384A with a 1N916 external diode for voltage translation, and the SN74CBTD3384. The SN74CBTD3384 output follows the input closely, but reaches a maximum of approximately 3.45 V at a V_{CC} of 5.5 V. Even at an extreme input level of 7 V, the SN74CBTD3384 limits the output to 3.5 V. Figure 5 emphasizes the role of V_{CC} in limiting the output. As V_{CC} changes from 4.5 V to 5.5 V, so does the limit of the output.

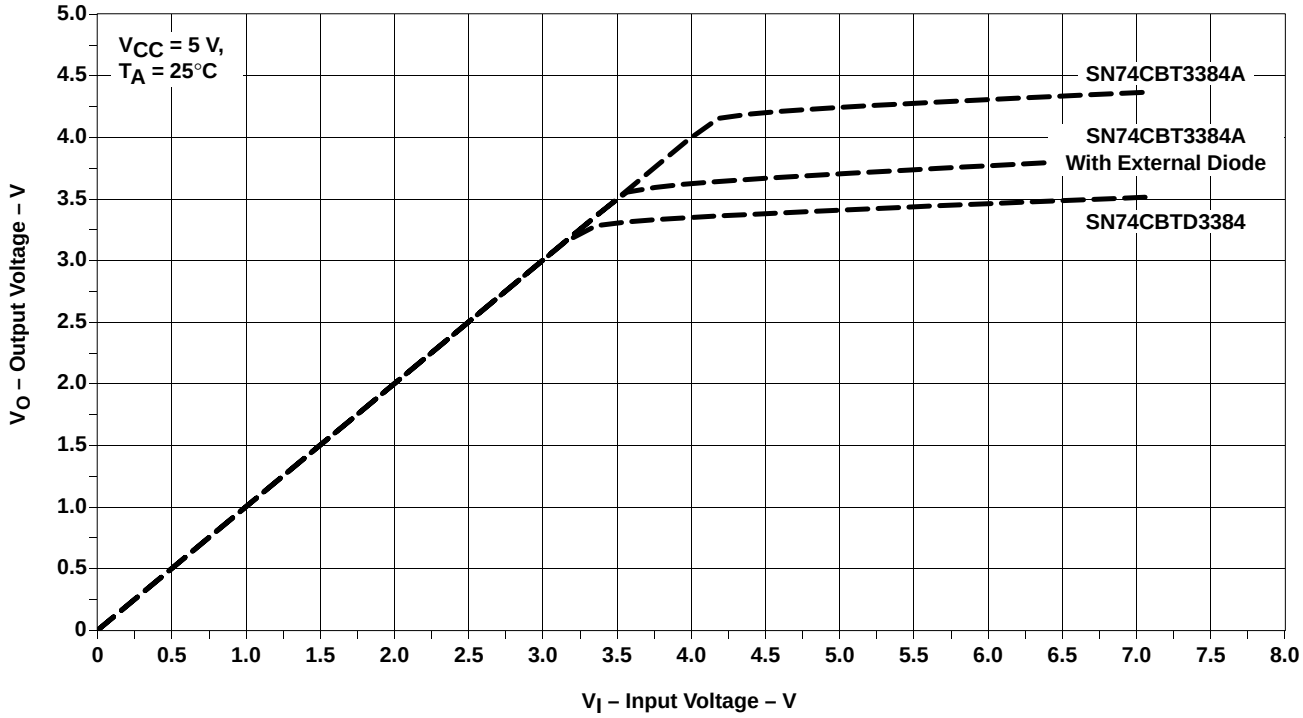

Figure 4. V_O Versus V_I of SN74CBT3384A, SN74CBT3384A With 1N916 External Diode, and SN74CBTD3384

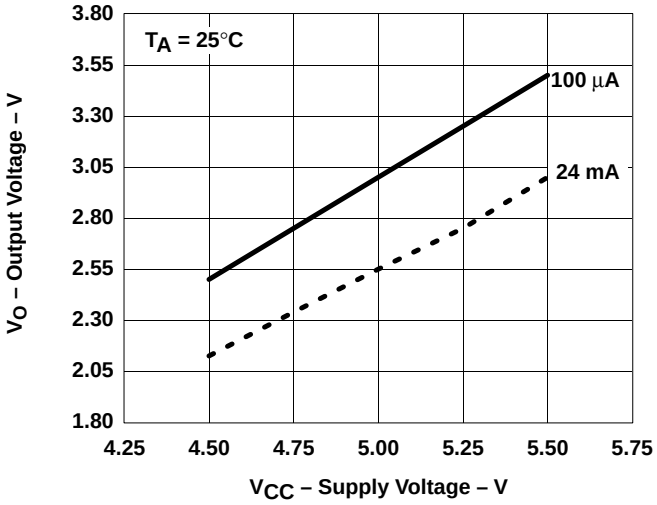

Figure 5. V_O Versus V_{CC} of the SN74CBTD3384

Conclusion

Lack of compatibility between certain 5-V and 3.3-V devices has driven the need for 5-V to 3.3-V translation. The standard method of using a bus switch to address this need has, historically, required an external diode. The SN74CBTD3384 bus switch is an improvement to this method because it provides reliable 5-V to 3.3-V translation and maintains its bidirectional capability, negligible propagation delay, and low power dissipation.

Acknowledgment

The author of this report is Nalin Yogasundram.

Implications of Slow or Floating CMOS Inputs

SCBA004C
February 1998

TEXAS INSTRUMENTS

IMPORTANT NOTICE

Texas Instruments (TI) reserves the right to make changes to its products or to discontinue any semiconductor product or service without notice, and advises its customers to obtain the latest version of relevant information to verify, before placing orders, that the information being relied on is current and complete.

TI warrants performance of its semiconductor products and related software to the specifications applicable at the time of sale in accordance with TI's standard warranty. Testing and other quality control techniques are utilized to the extent TI deems necessary to support this warranty. Specific testing of all parameters of each device is not necessarily performed, except those mandated by government requirements.

Certain applications using semiconductor products may involve potential risks of death, personal injury, or severe property or environmental damage ("Critical Applications").

TI SEMICONDUCTOR PRODUCTS ARE NOT DESIGNED, INTENDED, AUTHORIZED, OR WARRANTED TO BE SUITABLE FOR USE IN LIFE-SUPPORT APPLICATIONS, DEVICES OR SYSTEMS OR OTHER CRITICAL APPLICATIONS.

Inclusion of TI products in such applications is understood to be fully at the risk of the customer. Use of TI products in such applications requires the written approval of an appropriate TI officer. Questions concerning potential risk applications should be directed to TI through a local SC sales office.

In order to minimize risks associated with the customer's applications, adequate design and operating safeguards should be provided by the customer to minimize inherent or procedural hazards.

TI assumes no liability for applications assistance, customer product design, software performance, or infringement of patents or services described herein. Nor does TI warrant or represent that any license, either express or implied, is granted under any patent right, copyright, mask work right, or other intellectual property right of TI covering or relating to any combination, machine, or process in which such semiconductor products or services might be or are used.

Copyright © 1998, Texas Instruments Incorporated

Contents

Title *Page*

Introduction **9–33**

Characteristics of Slow or Floating CMOS Inputs **9–33**

Slow Input Edge Rate **9–35**

Floating Inputs **9–35**

Recommendations for Designing More-Reliable Systems **9–37**
- Bus Control 9–37
- Pullup or Pulldown Resistors 9–37
- Bus-Hold Circuits 9–38

Summary **9–44**

List of Illustrations

Figure	*Title*	*Page*
1	Input Structures of ABT and LVT/LVC Devices	9–33
2	Supply Current Versus Input Voltage (One Input)	9–34
3	Input Transition Rise or Fall Rate as Specified in Data Sheets	9–34
4	Input/Output Model	9–35
5	Examples of Supply-Current Change of the Input at TTL Level as Specified in Data Sheets	9–36
6	Supply Current Versus Input Voltage (36 Inputs)	9–36
7	Typical Bidirectional Bus	9–36
8	Inactive-Bus Model With a Defined Level	9–37
9	Typical Bus-Hold Circuit	9–38
10	Stand-Alone Bus-Hold Circuit (SN74ACT107x)	9–39
11	Diode Characteristics (SN74ACT107x)	9–39
12	Input Structure of ABT/LVT and ALVC/LVC Families With Bus-Hold Circuit	9–40
13	Bus-Hold Input Characteristics	9–41
14	Driver and Receiver System	9–42
15	Output Waveforms of Driver With and Without Receiver Bus-Hold Circuit	9–42
16	Bus-Hold Supply Current Versus Input Voltage	9–42
17	Input Power With and Without Bus Hold at Different Frequencies	9–43
18	Example of Data-Sheet Minimum Specification for Bus Hold	9–44

TI, Widebus, and Widebus+ are trademarks of Texas Instruments Incorporated.

Introduction

In recent years, CMOS (AC/ACT, AHC/AHCT, ALVC, CBT, CBTLV, HC/HCT, LVC, LV/LV-A) and BiCMOS (ABT, ALVT, BCT, FB, GTL, and LVT) logic families have further strengthened their position in the semiconductor market. New designs have adopted both technologies in almost every system that exists, whether it is a PC, a workstation, or a digital switch. The reason is obvious: power consumption is becoming a major issue in today's market. However, when designing systems using CMOS and BiCMOS devices, one must understand the characteristics of these families and the way inputs and outputs behave in systems. It is very important for the designer to follow all rules and restrictions that the manufacturer requires, as well as to design within the data-sheet specifications. Because data sheets do not cover the input behavior of a device in detail, this application report explains the input characteristics of CMOS and BiCMOS families in general. It also explains ways to deal with issues when designing with families in which floating inputs are a concern. Understanding the behavior of these inputs results in more robust designs and better reliability.

Characteristics of Slow or Floating CMOS Inputs

Both CMOS and BiCMOS families have a CMOS input structure. This structure is an inverter consisting of a p-channel to V_{CC} and an n-channel to GND as shown in Figure 1. With low-level input, the p-channel transistor is on and the n-channel is off, causing current to flow from V_{CC} and pulling the node to a high state. With high-level input, the n-channel transistor is on, the p-channel is off, and the current flows to GND, pulling the node low. In both cases, no current flows from V_{CC} to GND. However, when switching from one state to another, the input crosses the threshold region, causing the n-channel and the p-channel to turn on simultaneously, generating a current path between V_{CC} and GND. This current surge can be damaging, depending on the length of time that the input is in the threshold region (0.8 to 2 V). The supply current (I_{CC}) can rise to several milliamperes per input, peaking at approximately 1.5-V V_I (see Figure 2). This is not a problem when switching states within the data-sheet-specified input transition time limit specified in the recommended operating conditions table for the specific devices. Examples are shown in Figure 3.

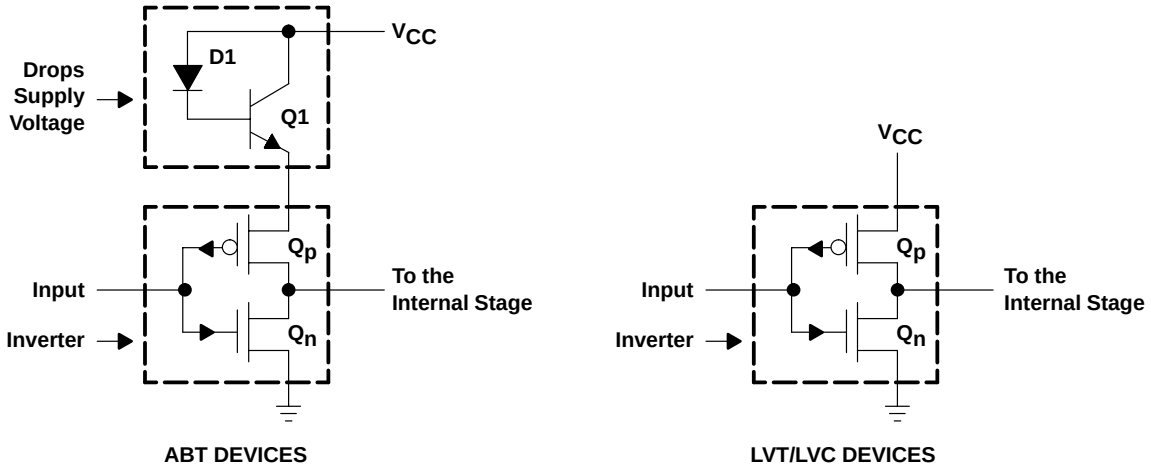

Figure 1. Input Structures of ABT and LVT/LVC Devices

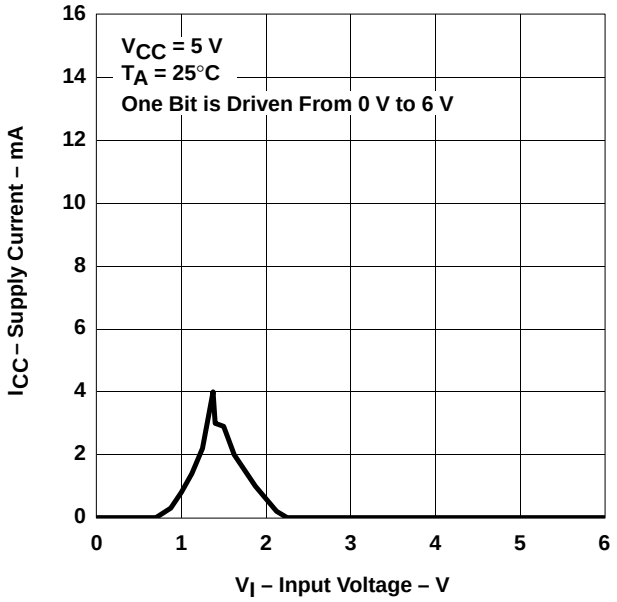

Figure 2. Supply Current Versus Input Voltage (One Input)

recommended operating conditions†

				MIN MAX	UNIT
Δt/Δv	Input transition rise or fall rate	ABT octals		5	ns/V
		ABT Widebus™ and Widebus+™		10	
		AHC, AHCT		20	
		FB		10	
		LVT, LVC, ALVC, ALVT		10	
		LV		100	
		LV-A	V_{CC} = 2.3 V to 2.7 V	200	
			V_{CC} = 3 V to 3.6 V	100	
			V_{CC} = 4.5 V to 5.5 V	20	
t_t	Input transition (rise and fall) time	HC, HCT	V_{CC} = 2 V	1000	ns
			V_{CC} = 4.5 V	500	
			V_{CC} = 6 V	400	

† Refer to the latest TI data sheets for device specifications.

Figure 3. Input Transition Rise or Fall Rate as Specified in Data Sheets

Slow Input Edge Rate

With increased speed, logic devices have become more sensitive to slow input edge rates. A slow input edge rate, coupled with the noise generated on the power rails when the output switches, can cause excessive output errors or oscillations. Similar situations can occur if an unused input is left floating or is not actively held at a valid logic level.

These functional problems are due to voltage transients induced on the device's power system as the output load current (I_O) flows through the parasitic lead inductances during switching (see Figure 4). Because the device's internal power-supply nodes are used as voltage references throughout the integrated circuit, inductive voltage spikes, V_{GND}, affect the way signals appear to the internal gate structures. For example, as the voltage at the device's ground node rises, the input signal, V_I', appears to decrease in magnitude. This undesirable phenomenon can then erroneously change the output if a threshold violation occurs.

In the case of a slowly rising input edge, if the change in voltage at GND is large enough, the apparent signal, V_I', at the device appears to be driven back through the threshold and the output starts to switch in the opposite direction. If worst-case conditions prevail (simultaneously switching all of the outputs with large transient load currents), the slow input edge is repeatedly driven back through the threshold, causing the output to oscillate. Therefore, the maximum input transition time of the device should not be violated, so no damage to the circuit or the package occurs.

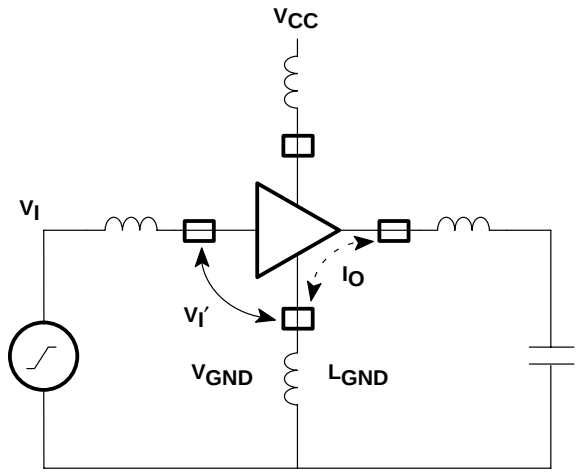

Figure 4. Input/Output Model

Floating Inputs

If a voltage between 0.8 V and 2 V is applied to the input for a prolonged period of time, this situation becomes critical and should not be ignored, especially with higher bit count and more dense packages (SSOP, TSSOP). For example, if an 18-bit transceiver has 36 I/O pins floating at the threshold, the current from V_{CC} can be as high as 150 mA to 200 mA. This is approximately 1 W of power consumed by the device, which leads to a serious overheating problem. This continuous overheating of the device affects its reliability. Also, because the inputs are in the threshold region, the outputs tend to oscillate, resulting in damage to the internal circuit over a long period of time. The data sheet shows the increase in supply current (ΔI_{CC}) when the input is at a TTL level [for ABT V_I = 3.4 V, ΔI_{CC} = 1.5 mA (see Figure 5)]. This becomes more critical when the input is in the threshold region as shown in Figure 6.

These characteristics are typical for all CMOS input circuits, including microprocessors and memories.

For CBT or CBTLV devices, this applies to the control inputs. For FB and GTL devices, this applies to the control inputs and the TTL ports only.

electrical characteristics over recommended operating free-air temperature range (unless otherwise noted)†

PARAMETER		TEST CONDITIONS			MIN	MAX	UNIT
ΔI_{CC}‡	ABT, AHCT	V_{CC} = 5.5 V,	One input at 3.4 V,	Other inputs at V_{CC} or GND		1.5	mA
	CBT Control inputs	V_{CC} = 5.5 V,	One input at 3.4 V,	Other inputs at V_{CC} or GND		2.5	
ΔI_{CC}‡	CBTLV Control inputs	V_{CC} = 3.6 V,	One input at 3 V,	Other inputs at V_{CC} or GND		750	µA
ΔI_{CC}‡	LVT	V_{CC} = 3 V to 3.6 V,	One input at V_{CC} – 0.6 V,	Other inputs at V_{CC} or GND		0.2	mA
	LVC, ALVC, LV					0.5	

† Refer to the latest TI data sheets for device specifications.
‡ This is the increase in supply current for each input that is at the specified TTL voltage level rather than V_{CC} or GND.

Figure 5. Examples of Supply-Current Change of the Input at TTL Level as Specified in Data Sheets

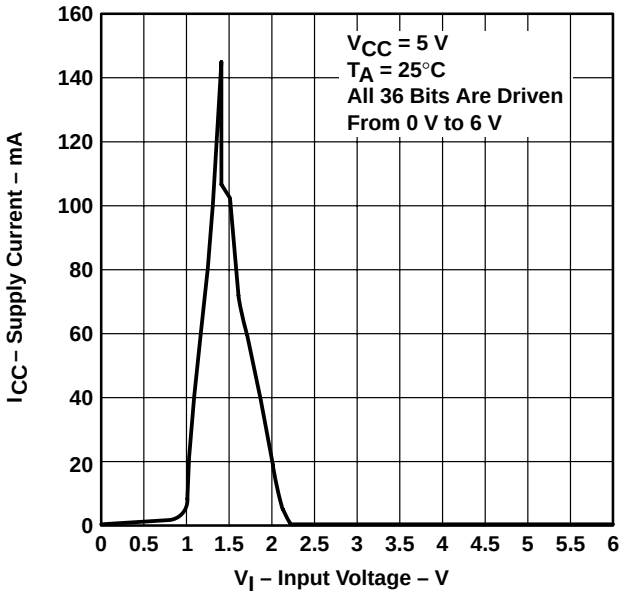

Figure 6. Supply Current Versus Input Voltage (36 Inputs)

As long as the driver is active in a transmission path or bus, the receiver's input is always in a valid state. No input specification is violated as long as the rise and fall times are within the data-sheet limits. However, when the driver is in a high-impedance state, the receiver input is no longer at a defined level and tends to float. This situation can worsen when several transceivers share the same bus. Figure 7 is an example of a typical bus system. When all transceivers are inactive, the bus-line levels are undefined. When a voltage that is determined by the leakage currents of each component on the bus is reached, the condition is known as a *floating state*. The result is a considerable increase in power consumption and a risk of damaging all components on the bus. Holding the inputs or I/O pins at a valid logic level when they are not being used or when the part driving them is in the high-impedance state is recommended.

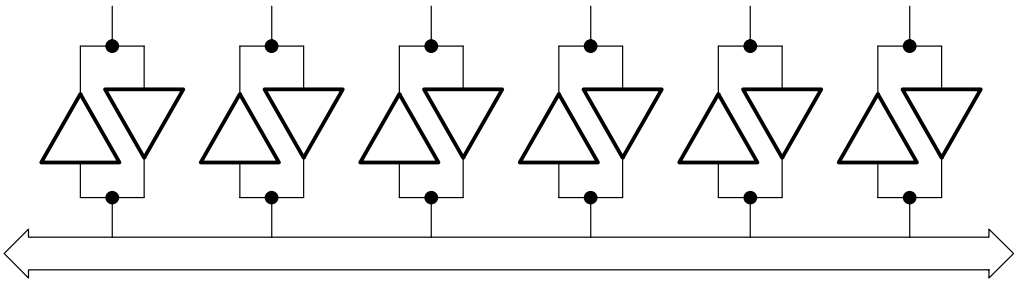

Figure 7. Typical Bidirectional Bus

Recommendations for Designing More-Reliable Systems

Bus Control

The simplest way to avoid floating inputs in a bus system is to ensure that the bus always is either active or inactive for a limited time when the voltage buildup does not exceed the maximum V_{IL} specification (0.8 V for TTL-compatible input). At this voltage, the corresponding I_{CC} value is too low and the device operates without any problem or concern (see Figures 2 and 4).

To avoid damaging components, the designer must know the maximum time the bus can float. First, assuming that the maximum leakage current is $I_{OZ} = 50\ \mu A$ and the total capacitance (I/O and line capacitance) is C = 20 pF, the change in voltage with respect to time on an inactive line that exceeds the 0.8-V level can be calculated as shown in equation 1.

$$\Delta V/\Delta t = \frac{I_{OZ}}{C} = \frac{50\ \mu A}{20\ pF} = 2.5\ V/\mu s \qquad (1)$$

The permissible floating time for the bus in this example should be reduced to 320 ns maximum, which ensures that the bus does not exceed the 0.8-V level specified. The time constant does not change when multiple components are involved because their leakage currents and capacitances are summed.

The advantage of this method is that it requires no additional cost for adding special components. Unfortunately, this method does not always apply because buses are not always active.

Pullup or Pulldown Resistors

When buses are disabled for more than the maximum allowable time, other ways should be used to prevent components from being damaged or overheated. A pullup or a pulldown resistor to V_{CC} or GND, respectively, should be used to keep the bus in a defined state. The size of the resistor plays an important role and, if its resistance is not chosen properly, a problem may occur. Usually, a 1-kΩ to 10-kΩ resistor is recommended. The maximum input transition time must not be violated when selecting pullup or pulldown resistors (see Figure 3). Otherwise, components may oscillate, or device reliability may be affected.

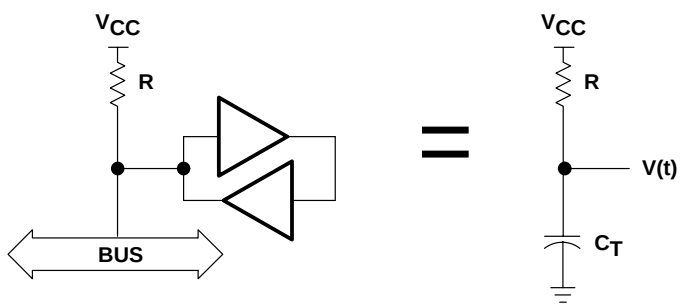

Figure 8. Inactive-Bus Model With a Defined Level

Assume that an active-low bus goes to the high-impedance state as modeled in Figure 8. C_T represents the device plus the bus-line capacitance and R is a pullup resistor to V_{CC}. The value of the required resistor can be calculated as shown in equation 2.

$$V(t) = V_{CC} - [e^{-t/RC_T}\ (V_{CC} - V_i)] \qquad (2)$$

Where:

V(t)	=	2 V, minimum voltage at time t
V_i	=	0.5 V, initial voltage
V_{CC}	=	5 V
C_T	=	total capacitance
R	=	pullup resistor
t	=	maximum input rise time as specified in the data sheets (see Figure 3).

Solving for R, the equation becomes:

$$R = \frac{t}{0.4 \times C_T} \quad (3)$$

For multiple transceivers on a bus:

$$R = \frac{t}{0.4 \times C \times N} \quad (4)$$

Where:

C = individual component and trace capacitance
N = number of components connected to the bus

Assuming that there are two components connected to the bus, each with a capacitance C = 15 pF, requiring a maximum rise time of 10 ns/V and t = 15-ns total rise time for the input (2 V), the maximum resistor size can be calculated:

$$R = \frac{15\ \text{ns}}{0.4 \times 15\ \text{pF} \times 2} = 1.25\ \text{k}\Omega \quad (5)$$

This pullup resistor method is recommended for ac-powered systems; however, it is not recommended for battery-operated equipment because power consumption is critical. Instead, use the bus-hold feature that is discussed in the next section. The overall advantage of using pullup resistors is that they ensure defined levels when the bus is floating and help eliminate some of the line reflections, because resistors also can act as bus terminations.

Bus-Hold Circuits

The most effective method to provide defined levels for a floating bus is to use Texas Instruments (TI™) built-in bus-hold feature on selected families or as an external component like the SN74ACT1071 and SN74ACT1073 (refer to Table 1).

Table 1. Devices With Bus Hold

DEVICE TYPE	BUS HOLD INCORPORATED
SN74ACT1071	10-bit bus hold with clamping diodes
SN74ACT1073	16-bit bus hold with clamping diodes
ABT Widebus+ (32 and 36 bit)	All devices
ABT Octals and Widebus	Selected devices only
AHC/AHCT Widebus	TBA (Selected devices only)
Low Voltage (LVT and ALVC)	All devices
LVC Widebus	All devices

Bus-hold circuits are used in selected TI families to help solve the floating-input problem and eliminate the need for pullup and pulldown resistors. Bus-hold circuits consist of two back-to-back inverters with the output fed back to the input through a resistor (see Figure 9). To understand how the bus-hold circuit operates, assume that an active driver has switched the line to a high level. This results in no current flowing through the feedback circuit. Now, the driver goes to the high-impedance state and the bus-hold circuit holds the high level through the feedback resistor. The current requirement of the bus-hold circuit is determined only by the leakage current of the circuit. The same condition applies when the bus is in the low state and then goes inactive.

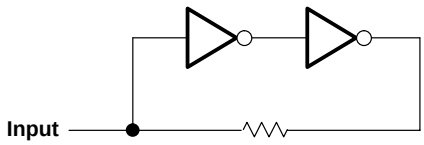

Figure 9. Typical Bus-Hold Circuit

As mentioned previously in this section, TI offers the bus-hold capability as stand-alone 10-bit and 16-bit devices (SN74ACT1071 and SN74ACT1073) with clamping diodes to V_{CC} and GND for added protection against line reflections caused by impedance mismatch on the bus. Because purely ohmic resistors cannot be implemented easily in CMOS circuits, a configuration known as a transmission gate is used as the feedback element (see Figure 10). An n-channel and a p-channel are arranged in parallel between the input and the output of the buffer stage. The gate of the n-channel transistor is connected to V_{CC} and the gate of the p-channel is connected to GND. When the output of the buffer is high, the p-channel is on, and when the output is low, the n-channel is on. Both channels have a relatively small surface area — the on-state resistance from drain to source, R_{dson}, is about 5 kΩ.

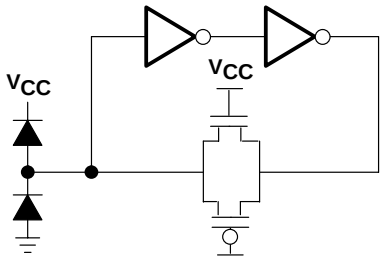

Figure 10. Stand-Alone Bus-Hold Circuit (SN74ACT107x)

Assume that in a practical application the leakage current of a driver on a bus is I_{OZ} = 10 µA and the voltage drop across the 5-kΩ resistance is V_D = 0.8 V (this value is assumed to ensure a defined logic level). Then, the maximum number of components that a bus-hold circuit can handle is calculated as follows:

$$N = \frac{V_D}{I_{OZ} \times R} = \frac{0.8\ V}{10\ \mu A \times 5\ k\Omega} = 16\ \text{components} \quad (6)$$

The 74ACT1071 and 74ACT1073 also provide clamping diodes as an added feature to the bus-hold circuit. These diodes are useful for clamping any overshoot or undershoot generated by line reflections. Figure 11 shows the characteristics of the diodes when the input voltage is above V_{CC} or below GND. At V_I = –1V, the diode can source about 50 mA, which can help eliminate undershoots. This can be very useful when noisy buses are a concern.

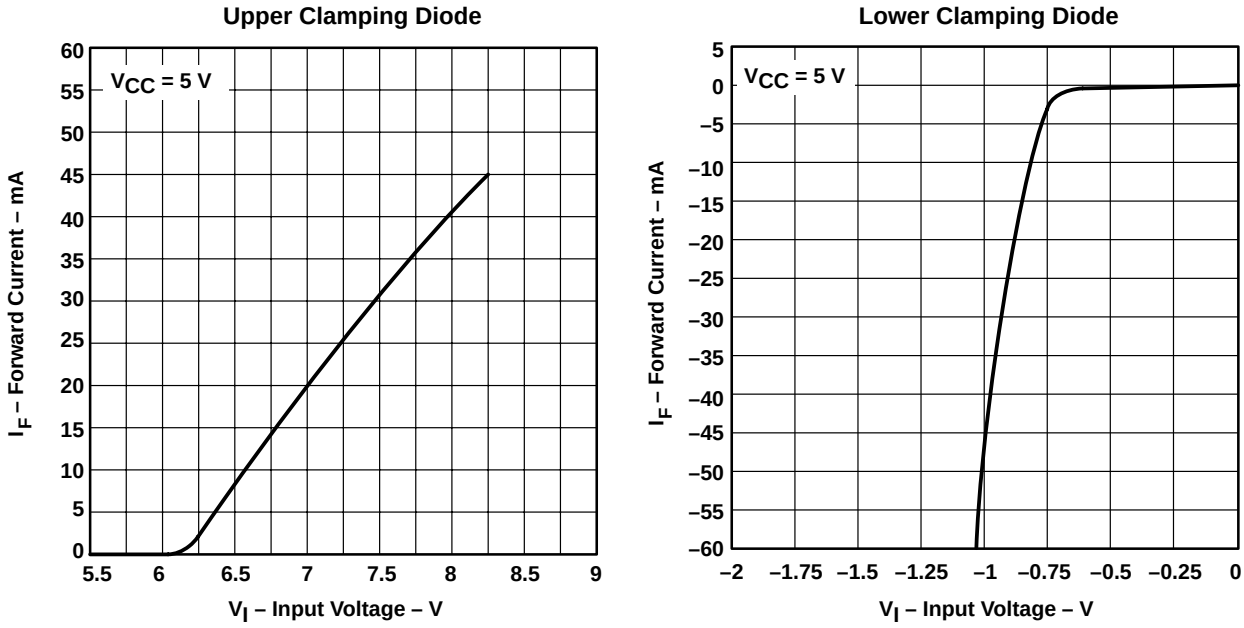

Figure 11. Diode Characteristics (SN74ACT107x)

TI also offers the bus-hold circuit as a feature added to some of the advanced-family drivers and receivers. This circuit is similar to the stand-alone circuit, with a diode added to the drain of the second inverter (ABT and LVT only, see Figure 12). The diode blocks the overshoot current when the input voltage is higher than V_{CC} ($V_I > V_{CC}$), so only the leakage current is present. This circuit uses the device's input stage as its first inverter; a second inverter creates the feedback feature. The calculation of the maximum number of components that the bus-hold circuit can handle is similar to the previous example. However, the advantage of this circuit over the stand-alone bus-hold circuit is that it eliminates the need for external components or resistors that occupy more area on the board. This becomes critical for some designs, especially when wide buses are used. Also, because cost and board-dimension restrictions are a major concern, designers prefer the easy fix: drop-in replaceable parts. TI offers this feature in most of the commonly used functions in several families (refer to Table 1 for more details).

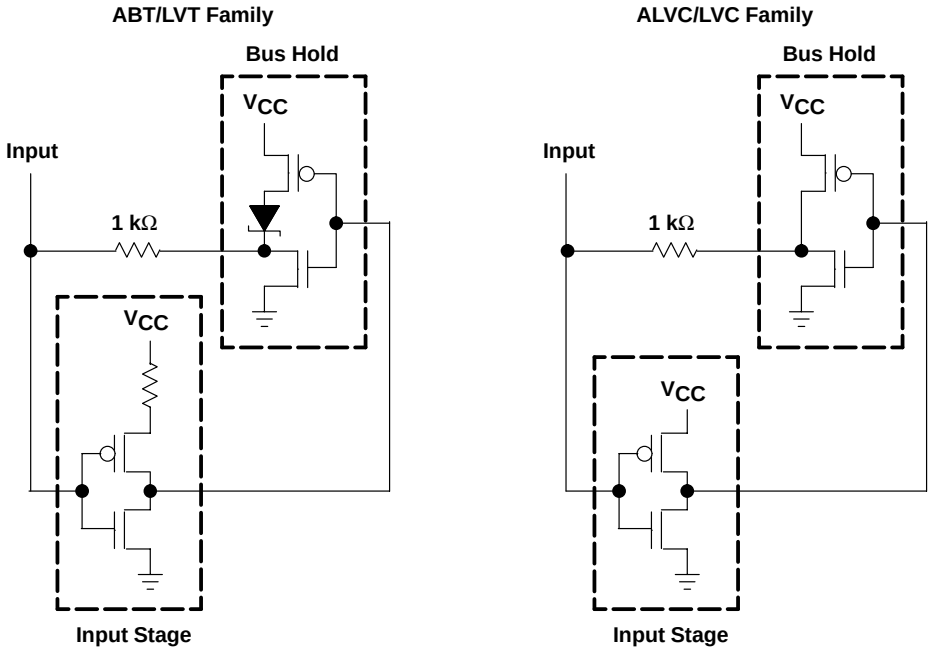

Figure 12. Input Structure of ABT/LVT and ALVC/LVC Families With Bus-Hold Circuit

Figure 13 shows the input characteristics of the bus-hold circuit at 3.3-V and 5-V operations, as the input voltage is swept from 0 to 5 V. These characteristics are similar in behavior to a weak driver. This driver sinks current into the part when the input is low and sources current out of the part when the input is high. When the voltage is near the threshold, the circuit tries to switch to the other state, always keeping the input at a valid level. This is the result of the internal feedback circuit. The plot also shows that the current is at its maximum when the input is near the threshold. $I_{I(hold)}$ maximum is approximately 25 µA for 3.3-V input and 400 µA for 5-V input.

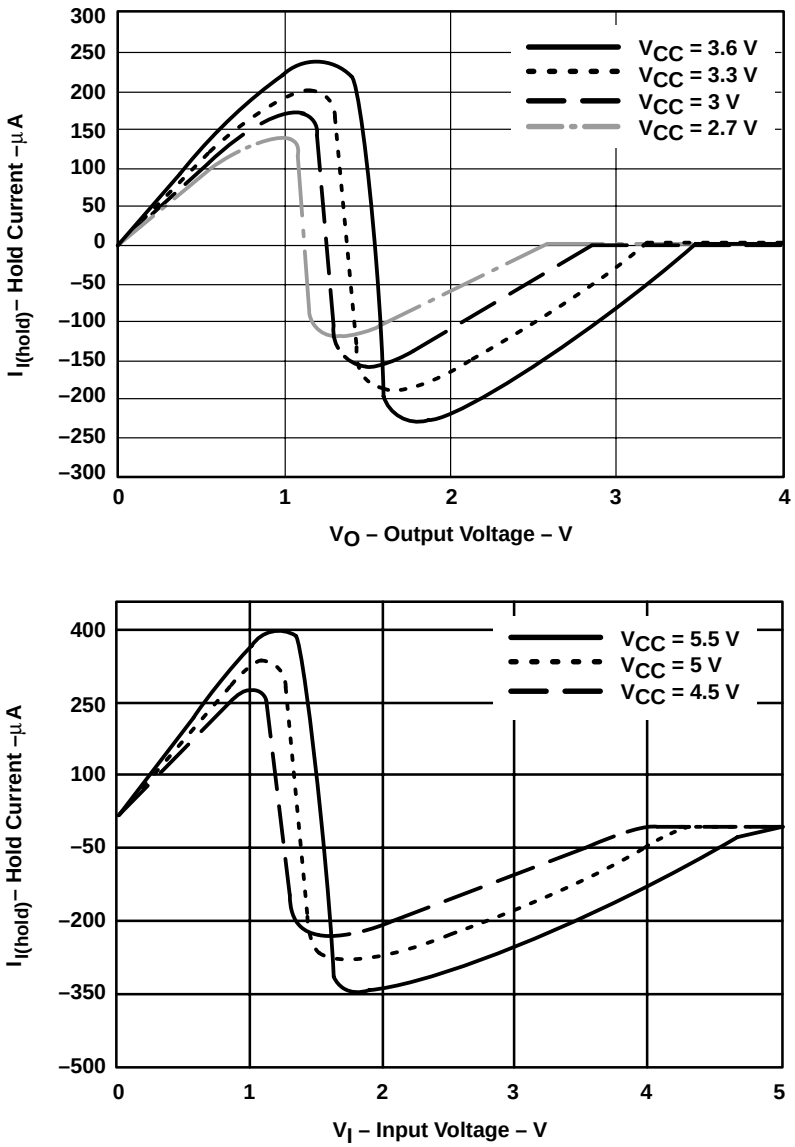

Figure 13. Bus-Hold Input Characteristics

When multiple devices with bus-hold circuits are driven by a single driver, there may be some concern about the ac switching capability of the driver becoming weaker. As small drivers, bus-hold circuits require an ac current to switch them. This current is not significant when using TI CMOS and BiCMOS families. Figure 14 shows a 4-mA buffer driving six LVTH16244 devices. The trace is a 75-Ω transmission line. The receivers are separated by 1cm, with the driver located in the center of the trace. Figure 15 shows the bus-hold loading effect on the driver when connected to six receivers switching low or high. It also shows the same system with the bus-hold circuit disconnected from the receivers. Both plots show the effect of bus hold on the driver's rise and fall times. Initially, the bus-hold circuit tries to counteract the driver, causing the rise or fall time to increase. Then, the bus-hold circuit changes states (note the crossover point), which helps the driver switch faster, decreasing the rise or fall time.

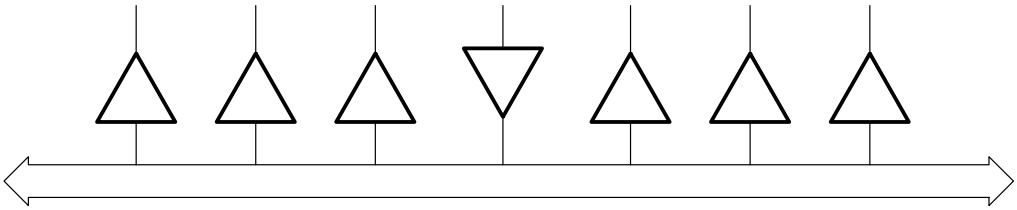

Figure 14. Driver and Receiver System

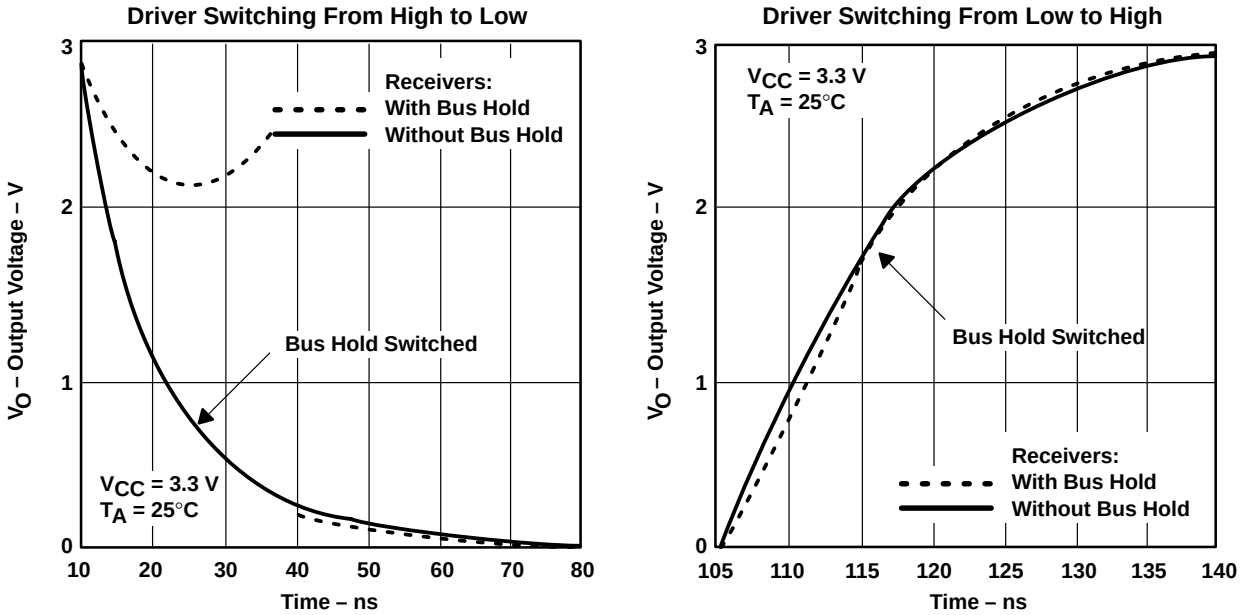

Figure 15. Output Waveforms of Driver With and Without Receiver Bus-Hold Circuit

Figure 16 shows the supply current (I_{CC}) of the bus-hold circuit as the input is swept from 0 to 5 V. The spike at about 1.5-V V_I is due to both the n-channel and the p-channel conducting simultaneously. This is one of the CMOS transistor characteristics.

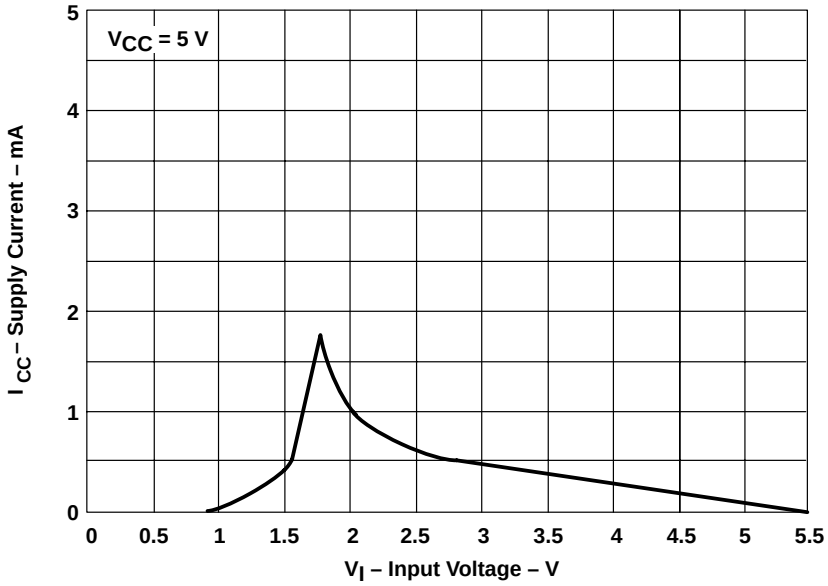

Figure 16. Bus-Hold Circuit Supply Current Versus Input Voltage

The power consumption of the bus-hold circuit is minimal when switching the input at higher frequencies. Figure 17 shows the power consumed by the input at different frequencies, with or without bus hold. The increase in power consumption of the bus-hold circuit at higher frequencies is not significant enough to be considered in power calculations.

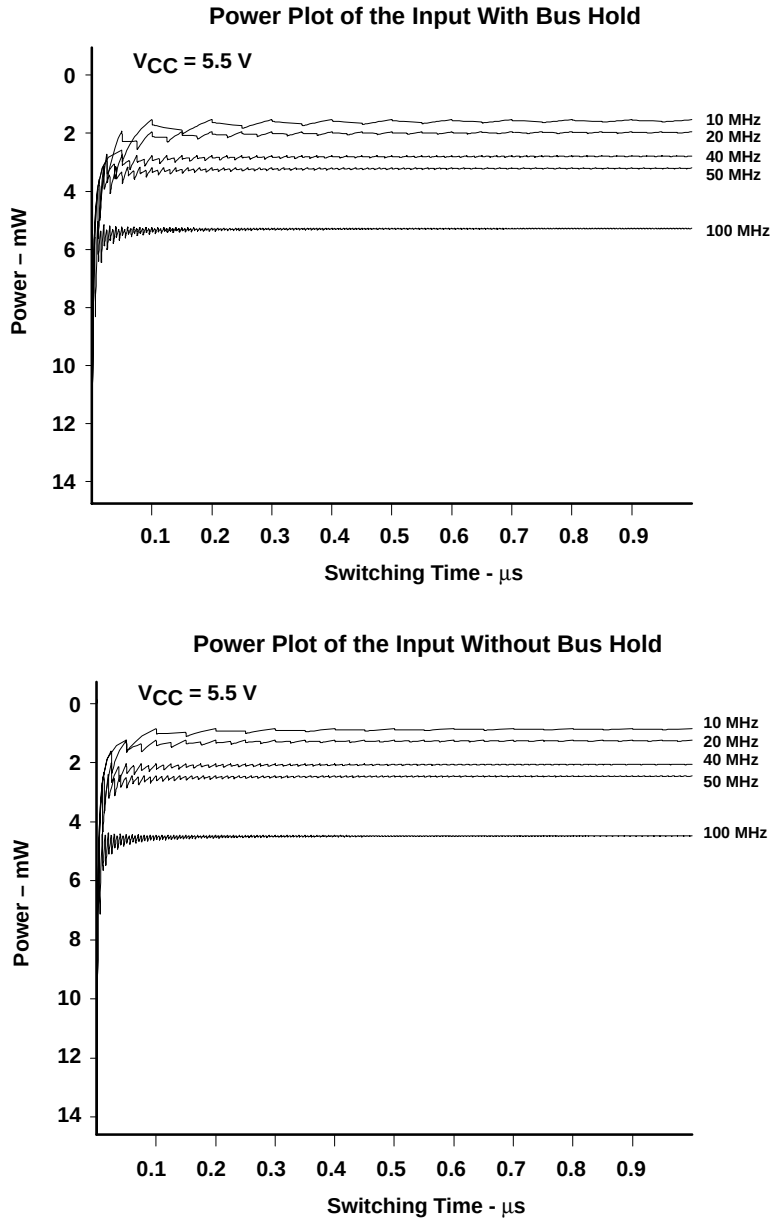

Figure 17. Input Power With and Without Bus Hold at Different Frequencies

Figure 18 shows the data-sheet dc specifications for bus hold. The first test condition is the minimum current required to hold the bus at 0.8 V or 2 V. These voltages meet the specified low and high levels for TTL inputs. The second test condition is the maximum current that the bus-hold circuit sources or sinks at any input voltage between 0 V and 3.6 V (for low-voltage families) or between 0 V and 5.5 V (for ABT). The bus-hold current becomes minimal as the input voltage approaches the rail voltage. The output leakage currents, I_{OZH} and I_{OZL}, are insignificant for transceivers with bus hold because a true leakage test cannot be performed due to the existence of the bus-hold circuit. Because the bus-hold circuit behaves as a small driver, it tends to source or sink a current that is opposite in direction to the leakage current. This situation is true for transceivers with the bus-hold feature only and does not apply to buffers. All LVT, ABT Widebus+, and selected ABT octal and Widebus devices have the bus-hold feature (refer to Table 1 or contact the local TI sales office for more information).

electrical characteristics over recommended operating free-air temperature range (for families with bus-hold feature)†

PARAMETER			TEST CONDITIONS		MIN	MAX	UNIT
$I_{I(hold)}$	Data inputs or I/Os	LVT, LVC, ALVC	V_{CC} = 3 V	V_I = 0.8 V	75		µA
				V_I = 2 V	–75		
		LVC, ALVC	V_{CC} = 3.6 V,	V_I = 0 to 3.6 V		±500	
		ABT Widebus+ and selected ABT	V_{CC} = 4.5 V	V_I = 0.8 V	100		
				V_I = 2 V	–100		
I_{OZH}/I_{OZL}	Transceivers with bus hold	ABT	This test is not a true I_{OZ} test because bus hold always is active on an I/O pin. Bus hold tends to supply a current that is opposite in direction to the output leakage current.			±1	µA
		LVT, LVC, ALVC					
	Buffers with bus hold	ABT	This test is a true I_{OZ} test since bus hold does not exist on an output pin.			±10	
		LVT, LVC, ALVC				±5	

† Refer to the latest TI data sheets for device specifications.

Figure 18. Example of Data-Sheet Minimum Specification for Bus Hold

Summary

Floating inputs and slow rise and fall times are important issues to consider when designing with CMOS and advanced BiCMOS families. It is important to understand the complications associated with floating inputs. Terminating the bus properly plays a major role in achieving reliable systems. The three methods recommended in this application report should be considered. If it is not possible to control the bus directly, and adding pullup or pulldown resistors is impractical due to power-consumption and board-space limitations, bus hold is the best choice. TI designed bus hold to reduce the need for resistors used in bus designs, thus reducing the number of components on the board and improving the overall reliability of the system.

3.3-V to 2.5-V Translation With Texas Instruments Crossbar Technology

SCDA004A
April 1998

TEXAS INSTRUMENTS

IMPORTANT NOTICE

Texas Instruments (TI) reserves the right to make changes to its products or to discontinue any semiconductor product or service without notice, and advises its customers to obtain the latest version of relevant information to verify, before placing orders, that the information being relied on is current and complete.

TI warrants performance of its semiconductor products and related software to the specifications applicable at the time of sale in accordance with TI's standard warranty. Testing and other quality control techniques are utilized to the extent TI deems necessary to support this warranty. Specific testing of all parameters of each device is not necessarily performed, except those mandated by government requirements.

Certain applications using semiconductor products may involve potential risks of death, personal injury, or severe property or environmental damage ("Critical Applications").

TI SEMICONDUCTOR PRODUCTS ARE NOT DESIGNED, INTENDED, AUTHORIZED, OR WARRANTED TO BE SUITABLE FOR USE IN LIFE-SUPPORT APPLICATIONS, DEVICES OR SYSTEMS OR OTHER CRITICAL APPLICATIONS.

Inclusion of TI products in such applications is understood to be fully at the risk of the customer. Use of TI products in such applications requires the written approval of an appropriate TI officer. Questions concerning potential risk applications should be directed to TI through a local SC sales office.

In order to minimize risks associated with the customer's applications, adequate design and operating safeguards should be provided by the customer to minimize inherent or procedural hazards.

TI assumes no liability for applications assistance, customer product design, software performance, or infringement of patents or services described herein. Nor does TI warrant or represent that any license, either express or implied, is granted under any patent right, copyright, mask work right, or other intellectual property right of TI covering or relating to any combination, machine, or process in which such semiconductor products or services might be or are used.

Copyright © 1998, Texas Instruments Incorporated

Contents

Title *Page*

Introduction **9–49**

2.5-V and 3.3-V Switching Standards **9–49**
3.3-V to 2.5-V Translation 9–49
2.5-V to 3.3-V Translation 9–49

Translating With CBT **9–50**

Conclusion **9–51**

Acknowledgment **9–51**

List of Illustrations

Figure *Title* *Page*

1 3.3-V and 2.5-V V_{CC} Thresholds 9–49

2 Divider Network 9–50

Introduction

The Texas Instruments (TI™) crossbar-technology (CBT) family is known for its multipurpose use in the design arena. It is used in almost every personal computer, server, workstation, and telecom application in the industry. CBT is an easy and low-cost solution for systems that require:

- Bus isolation
- Bus swapping in a multiprocessor/memory environment
- Live insertion
- 5-V to 3.3-V translation
- 3.3-V to 2.5-V translation

Translation from 3.3 V to 2.5 V is accomplished easily; however, reliable translation from 2.5 V to 3.3 V cannot be achieved with the existing CBT family because there is no noise margin for the high-state switching.

2.5-V and 3.3-V Switching Standards

Figure 1 shows the 3.3-V and 2.5-V switching thresholds.

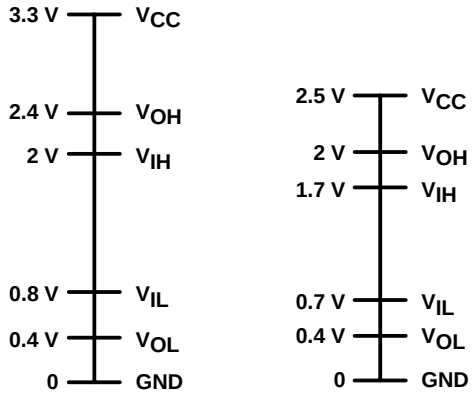

Figure 1. 3.3-V and 2.5-V V_{CC} Thresholds

3.3-V to 2.5-V Translation

Figure 1 shows there is enough noise margin (300 mV for low state and 700 mV for high state) to establish reliable translation from 3.3-V logic to 2.5-V logic. This is always valid, but one must ensure that the input clamping diode of the 2.5-V device is not forward biased. V_{IH} should not exceed V_{CC} (2.5-V logic) + 0.3 V.

2.5-V to 3.3-V Translation

Figure 1 shows a 400-mV noise margin for the low-state translation, but zero noise margin for the high state, and therefore, translation from 2.5-V to 3.3-V devices cannot be achieved without additional consideration.

TI is a trademark of Texas Instruments Incorporated.

Translating With CBT

A CBT switch is a simple NMOS transistor that acts like a resistor when it is on. Its impedance varies with the amount of current flowing from its drain to its source. A single 3.3-V power supply connected to V_{CC} is not enough to provide sufficient translation since V_{OH} can vary, depending on the input current (I_I) through the switch. The higher I_I is, the lower the output logic level V_{OH} is. A higher 2.5-V device V_{CC} is required to maintain the minimum V_{OH}. The following tables show the required 2.5-V device V_{CC} to maintain a 2-V and 2.4-V V_{OH}.

V_{IN} = 3.3 V, $V_{OH(MIN)}$ = 2 V	
I_I THROUGH THE SWITCH	REQUIRED V_{CC}
1 µA	2.75 V
100 µA	3 V
1 mA	3.1 V
15 mA	3.5 V
30 mA	3.7 V

V_{IN} = 3.3 V, $V_{OH(MIN)}$ = 2.4 V	
I_I THROUGH THE SWITCH	REQUIRED V_{CC}
1 µA	3.1 V
100 µA	3.4 V
1 mA	3.6 V
15 mA	4 V
30 mA	4.2 V

To achieve a good supply voltage to the V_{CC} pin and still be able to modify it based on the input current requirement, a voltage divider should be used to derive the required voltage, as shown in Figure 2. The recommended value of R_2 is 10 kΩ. $C_{(bypass)}$ is the bypass capacitor (recommended value ranges from 0.1 to 0.01 µF and should be as close as possible to the V_{CC} pin of the CBT device). The value of R_1 is determined from the power-supply voltage, the input current, and the V_{OH} requirement.

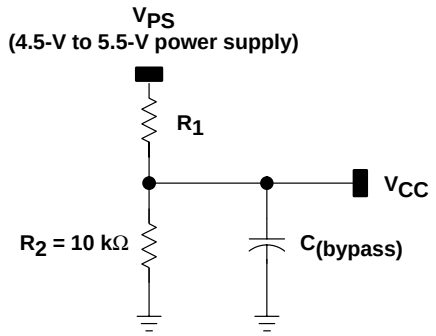

Note: $C_{(bypass)}$ = 0.1 to 0.01 µF

Figure 2. Divider Network

Choosing the correct resistor size (R_1) depends on three factors:

- Power-supply voltage level (V_{PS})
- Chip power-supply voltage needed (V_{CC})
- V_{OH} level of the switch

R_1 can be calculated using the generalized formula:

$$R_1 = V_{R1}/I_{R1} \quad (1)$$

Where:

$V_{R1} = V_{PS} - V_{CC}$
$I_{R1} = I_{R2} + I_{CC}$
$I_{R2} = V_{CC}/R_2$
$I_{CC} = 100\ \mu A$
$R_2 = 10\ k\Omega$

The generalized formula for R_1 can be expanded, by substitution, to:

$$R_1 = (V_{PS} - V_{CC})/[(V_{CC}/10\ k\Omega) + 100\ \mu A] \quad (2)$$

The following tables show the range of R_1 based on a 5-V supply voltage (V_{PS}), 3.3-V input signal (V_{IH}), 2-V and 2.4-V V_{OH} level with up to 30-mA $I_{(I)}$ through the switch. These tables allow the designer to choose the correct resistor for the design, based on design requirements.

V_{IN} = 3.3 V, $V_{OH(MIN)}$ = 2 V, I_{CC} = 100 µA				
I_I THROUGH THE SWITCH	REQUIRED V_{CC} (V)	R_1 AT V_{PS} = 4.5 V (kΩ)	R_1 AT V_{PS} = 5 V (kΩ)	R_1 AT V_{PS} = 5.5 V (kΩ)
1 µA	2.75	4.64	6.04	7.32
100 µA	3	3.74	4.99	6.19
1 mA	3.1	3.4	4.64	5.9
15 mA	3.5	2.21	3.32	4.42
30 mA	3.7	1.69	2.74	3.83

V_{IN} = 3.3 V, $V_{OH(MIN)}$ = 2.4 V, I_{CC} = 100 µA				
I_I THROUGH THE SWITCH	REQUIRED V_{CC} (V)	R_1 AT V_{PS} = 4.5 V (kΩ)	R_1 AT V_{PS} = 5 V (kΩ)	R_1 AT V_{PS} = 5.5 V (kΩ)
1 µA	3.1	3.4	4.64	5.9
100 µA	3.4	2.49	3.65	4.75
1 mA	3.6	1.96	3.01	4.12
15 mA	4	1	2	3.01
30 mA	4.2	0.576	1.54	2.49

Conclusion

TI's CBT family is versatile, not only in the 5-V or the 3.3-V environment, but also in the 2.5-V arena, using a single 5-V power supply to generate required voltage for its V_{CC} pin. This family functions reliably as long as the above conditions are met.

Acknowledgment

This application report was written by Ramzi Ammar, SLL Applications, Texas Instruments.

General Information 1
CBT Single Gates 2
CBT (2 to 10 Bit) 3
CBT Widebus™ 4
CBT With Integrated Diodes 5
CBTLV Single Gates 6
CBTLV (2 to 10 Bit) 7
CBTLV Widebus™ 8
Application Reports 9
Mechanical Data 10

Contents

	Page
Ordering Instructions	**10–3**
Mechanical Data	**10–7**
D (R-PDSO-G**)	10–7
DB (R-PDSO-G**)	10–8
DBQ (R-PDSO-G**)	10–9
DBV (R-PDSO-G5)	10–10
DGG (R-PDSO-G**)	10–11
DGV (R-PDSO-G**)	10–12
DL (R-PDSO-G**)	10–13
DW (R-PDSO-G**)	10–14
FK (S-CQCC-N**)	10–15
JT (R-GDIP-T**)	10–16
PW (R-PDSO-G**)	10–17
W (R-GDFP-F24)	10–18
WD (R-GDFP-F**)	10–19

Electrical characteristics presented in this data book, unless otherwise noted, apply for the circuit type(s) listed in the page heading, regardless of package. The availability of a circuit function in a particular package is denoted by an alphabetical reference above the pin-connection diagram(s). These alphabetical references refer to mechanical outline drawings shown in this section.

Factory orders for circuits described in this data book should include a three-part type number as explained in the following example.

EXAMPLE: SN 74CBT3245A PW R

Prefix

SN = Standard prefix
SNJ = Compliant to MIL-PRF-38535 (QML)

Unique Circuit Description

MUST CONTAIN SIX TO THIRTEEN CHARACTERS

Examples: 74CBT3125
74CBT16233
74CBTLV162292

Package

MUST CONTAIN ONE TO THREE LETTERS

D, DW	= plastic small-outline package (SOIC)
DB, DBQ, DL (or L)	= plastic shrink small-outline package (SSOP)†
DBV	= plastic small-outline transistor (SOT)
DGG (or G), PW	= plastic thin shrink small-outline package (TSSOP)†
DGV (or V)	= plastic thin very small-outline package (TVSOP)†
FK	= leadless ceramic chip carrier (LCCC)
JT	= ceramic dual-in-line package (CDIP)
W, WD	= ceramic flat package (CFP)

(from pin-connection diagram on individual data sheet)

Tape-and-Reel Packaging

Valid for surface-mount packages only. All orders for tape and reel must be for whole reels.

R = Standard tape and reel [required for DGG (or G) and DGV (or V); optional for D, DL (or L), and DW packages]‡

The purpose of tape-and-reel packing is to position components so they can be placed automatically. Components such as, but not limited to, diodes, capacitors, resistors, transistors, inductors, and integrated circuits can be packed in this manner.

The packing materials include a carrier tape, cover tape, and a reel. The normal dimensions for these items are listed in Table 1.

† TI is changing the nomenclature for select logic devices. For details, see page 1–6.
‡ All reeled material previously designated LE will continue to be reeled left embossed, but an R designator will be used.

Table 1. Normal Dimensions of Packing Materials

CARRIER-TAPE WIDTH (mm)	COVER-TAPE WIDTH (mm)	REEL WIDTH (mm)	REEL DIAMETER (mm)
8	5.4	9.0	178
12	9.2	12.4	330
16	13.3	16.4	330
24	21.0	24.4	330
32	25.5	32.4	330
44	37.5	44.4	330
56	49.5	56.4	330

All material meets or exceeds industry guidelines for ESD protection.

Dimensions are selected based on package size and design configurations. All dimensions are established to be within the recommendations of the Electronics Industry Association Standard EIA-481-1,2,3.

Common dimensions of particular interest to the end user are carrier-tape width, pocket pitch, and quantity per reel (see Figure 1 and Table 2).

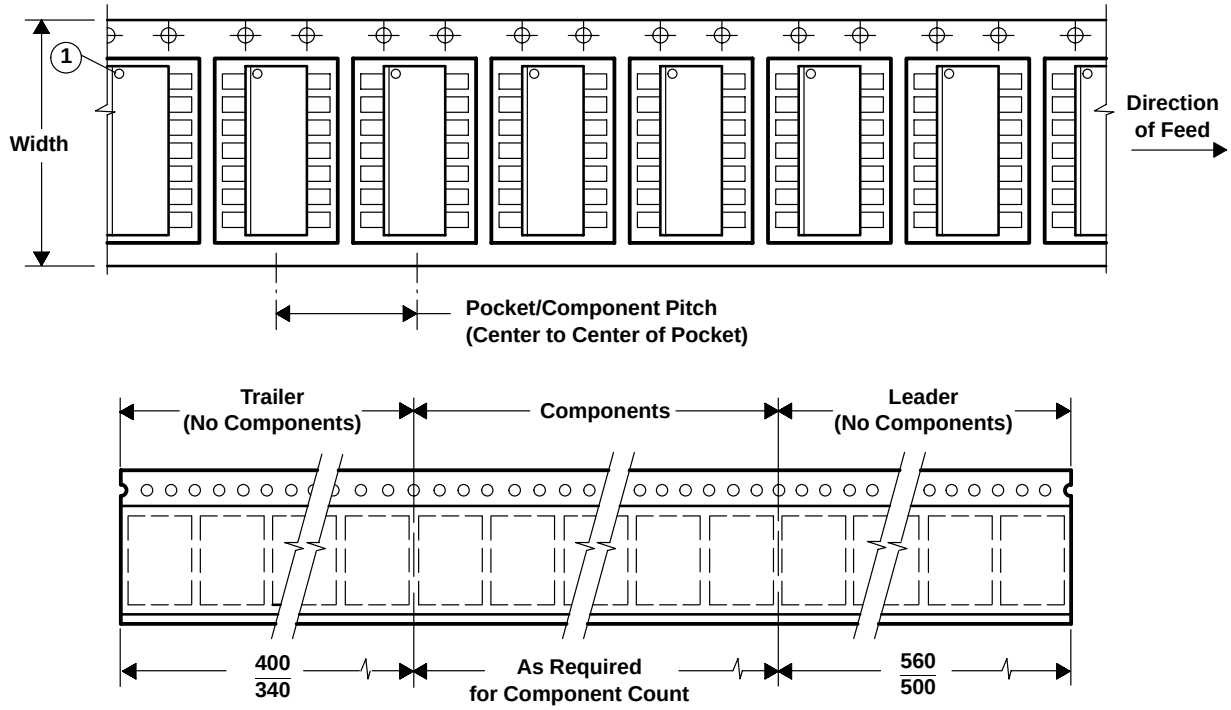

Figure 1. Typical Carrier-Tape Design

Table 2. Selected Tape-and-Reel Specifications

PACKAGE		NO. OF PINS	CARRIER-TAPE WIDTH (mm)	POCKET PITCH (mm)	QTY/REEL
SOIC	D	14	16.00	8.00	2500
		16	16.00	8.00	2500
	DW	16	16.00	8.00/12.00	1000
		20	24.00	12.00	1000
SOT	DBV	5	8.00	4.00	3000
	DCK	5	8.00	4.00	3000
SSOP	DB	14/16	16.00	12.00	2000
		20	16.00	12.00	2000
	DL	48	32.00	16.00	1000
TSSOP	DGG	48	24.00	12.00	2000
	PW	8	16.00	8.00	2000
		14/16	16.00	8.00	2000
		20	16.00	8.00	2000
TVSOP	DGV	14	16.00	8.00	2000
		16	16.00	8.00	2000
		20	16.00	8.00	2000
		48	16.00	8.00	2000

D (R-PDSO-G)** **PLASTIC SMALL-OUTLINE PACKAGE**

14 PIN SHOWN

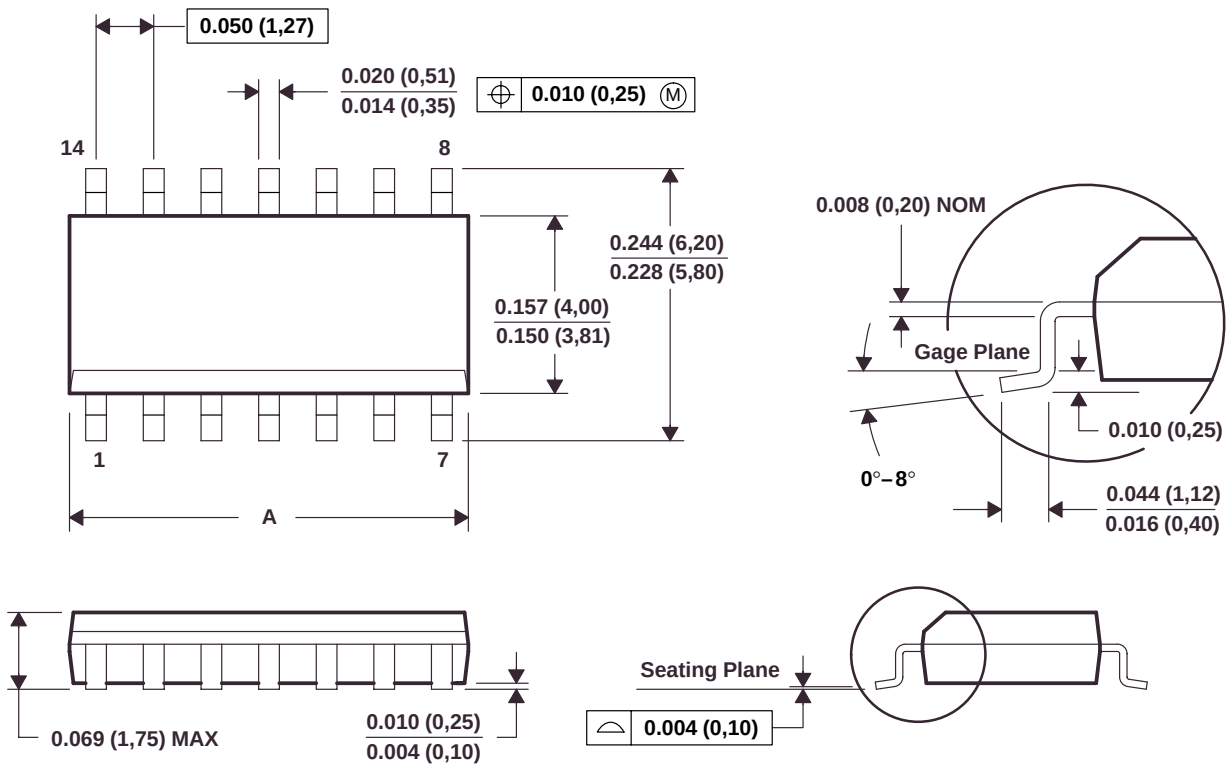

DIM \ PINS **	8	14	16
A MAX	0.197 (5,00)	0.344 (8,75)	0.394 (10,00)
A MIN	0.189 (4,80)	0.337 (8,55)	0.386 (9,80)

4040047 / D 10/96

NOTES: A. All linear dimensions are in inches (millimeters).
B. This drawing is subject to change without notice.
C. Body dimensions do not include mold flash or protrusion, not to exceed 0.006 (0,15).
D. Falls within JEDEC MS-012

DB (R-PDSO-G)** **PLASTIC SMALL-OUTLINE PACKAGE**

28 PIN SHOWN

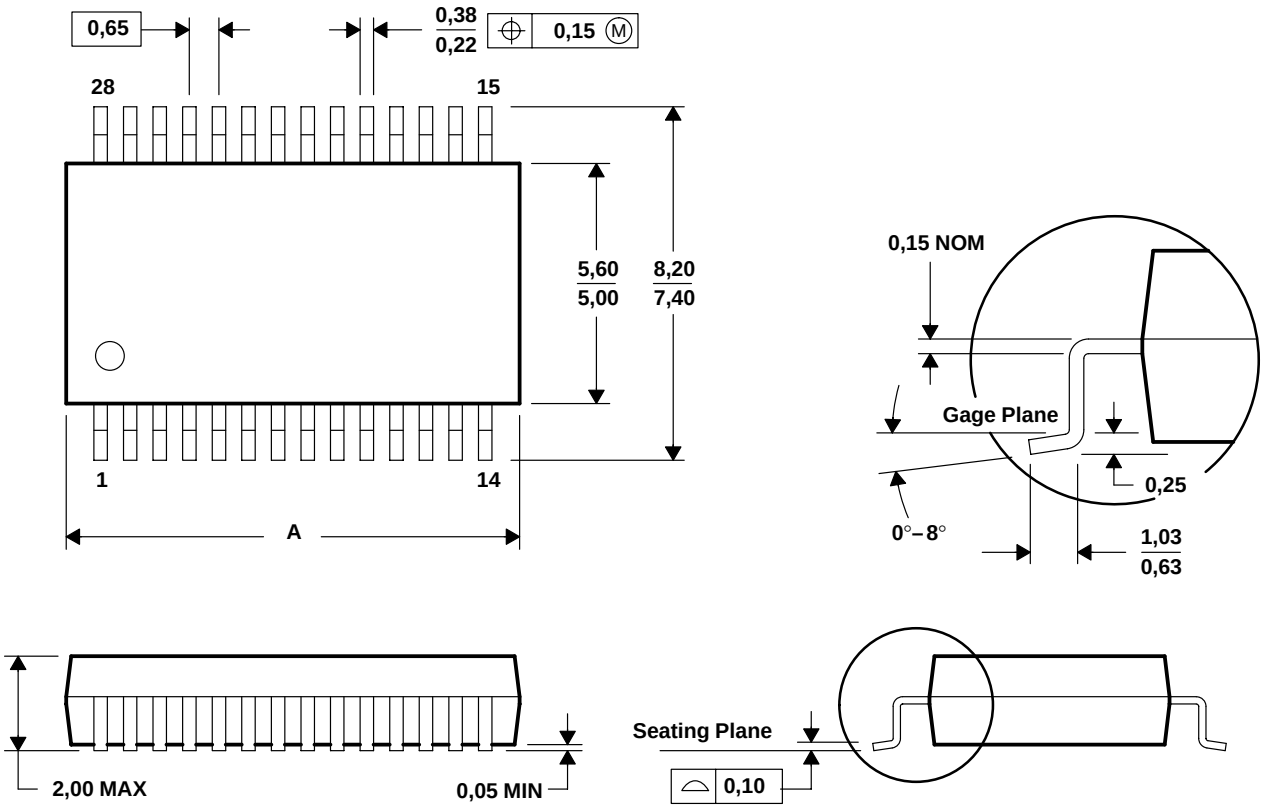

DIM \ PINS **	14	16	20	24	28	30	38
A MAX	6,50	6,50	7,50	8,50	10,50	10,50	12,90
A MIN	5,90	5,90	6,90	7,90	9,90	9,90	12,30

4040065 / D 02/98

NOTES: A. All linear dimensions are in millimeters.
B. This drawing is subject to change without notice.
C. Body dimensions do not include mold flash or protrusion not to exceed 0,15.
D. Falls within JEDEC MO-150

DBQ (R-PDSO-G)** **PLASTIC SMALL-OUTLINE PACKAGE**

24–PIN SHOWN

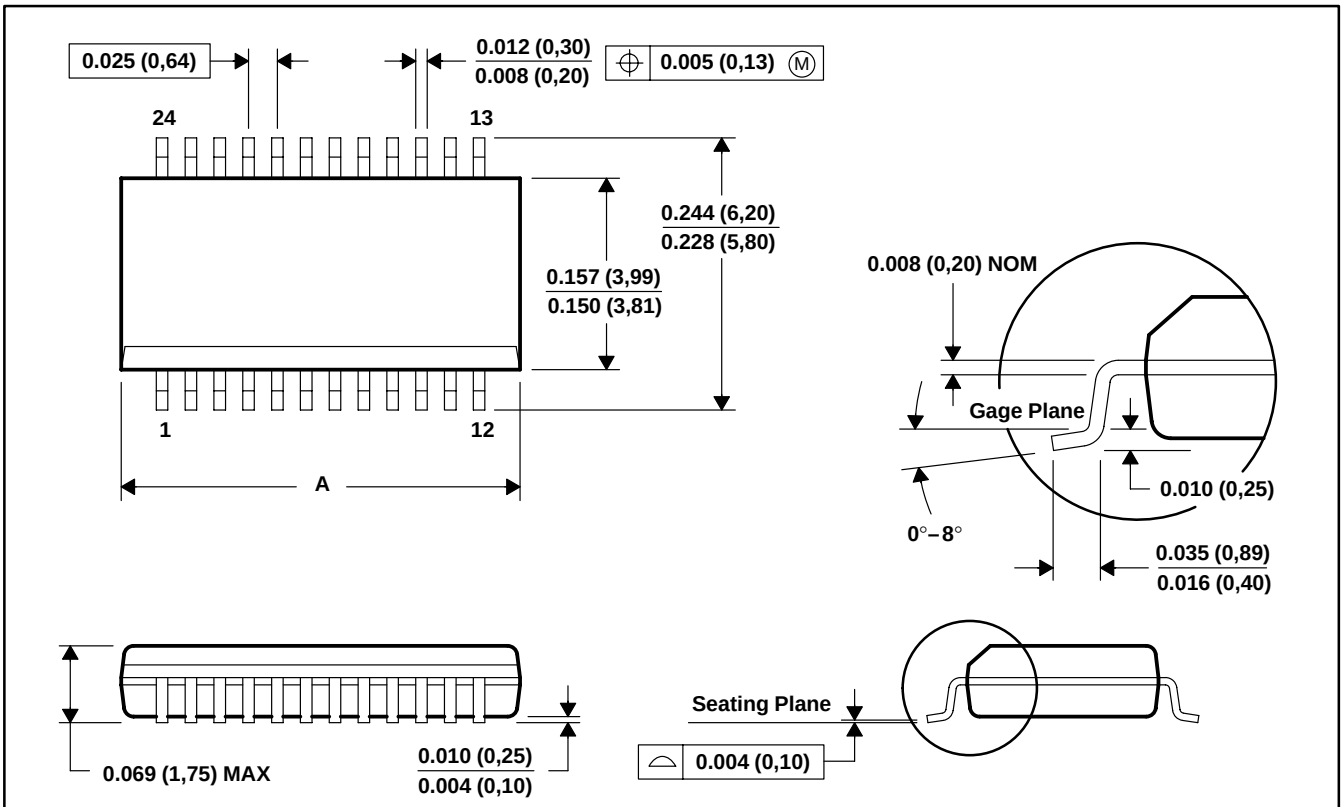

DIM \ PINS **	16	20	24
A MAX	0.197 (5,00)	0.344 (8,74)	0.344 (8,74)
A MIN	0.188 (4,78)	0.337 (8,56)	0.337 (8,56)

4073301/C 02/97

NOTES: A. All linear dimensions are in inches (millimeters).
B. This drawing is subject to change without notice.
C. Body dimensions do not include mold flash or protrusion not to exceed 0.006 (0,15).
D. Falls within JEDEC MO-137

DBV (R-PDSO-G5) **PLASTIC SMALL-OUTLINE PACKAGE**

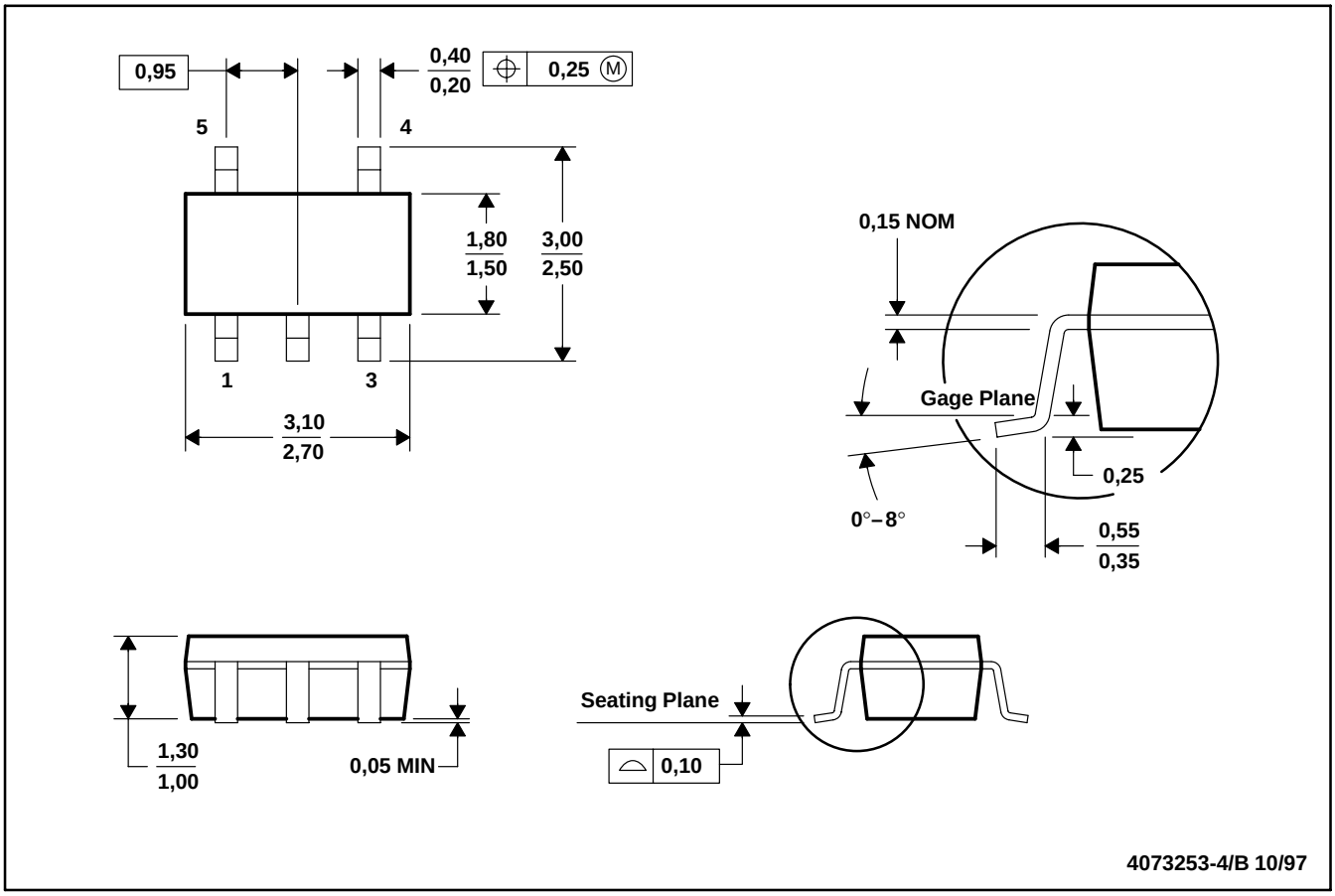

NOTES: A. All linear dimensions are in millimeters.
B. This drawing is subject to change without notice.
C. Body dimensions include mold flash or protrusion.

DGG (R-PDSO-G)** **PLASTIC SMALL-OUTLINE PACKAGE**

48 PIN SHOWN

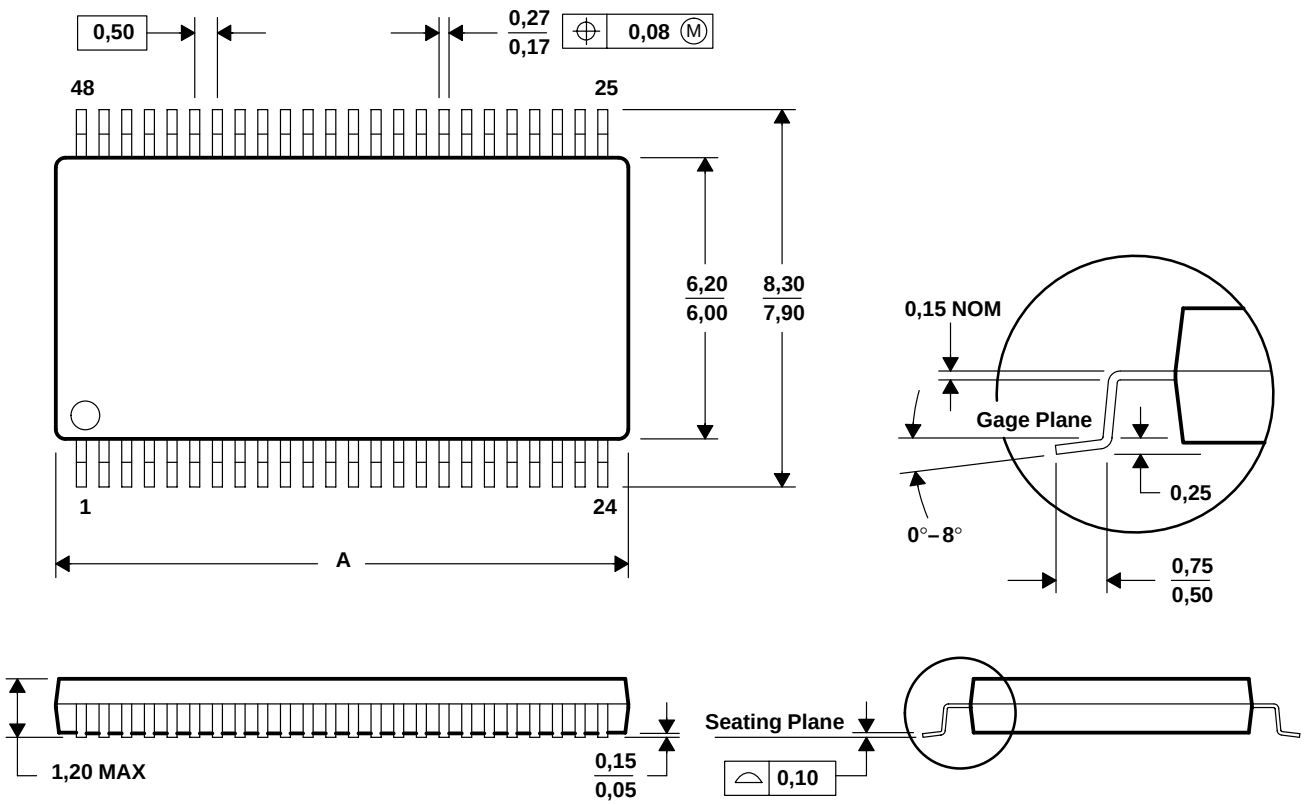

DIM \ PINS **	48	56	64
A MAX	12,60	14,10	17,10
A MIN	12,40	13,90	16,90

4040078/F 12/97

NOTES: A. All linear dimensions are in millimeters.
B. This drawing is subject to change without notice.
C. Body dimensions do not include mold protrusion not to exceed 0,15.
D. Falls within JEDEC MO-153

DGV (R-PDSO-G)** **PLASTIC SMALL-OUTLINE PACKAGE**

24 PIN SHOWN

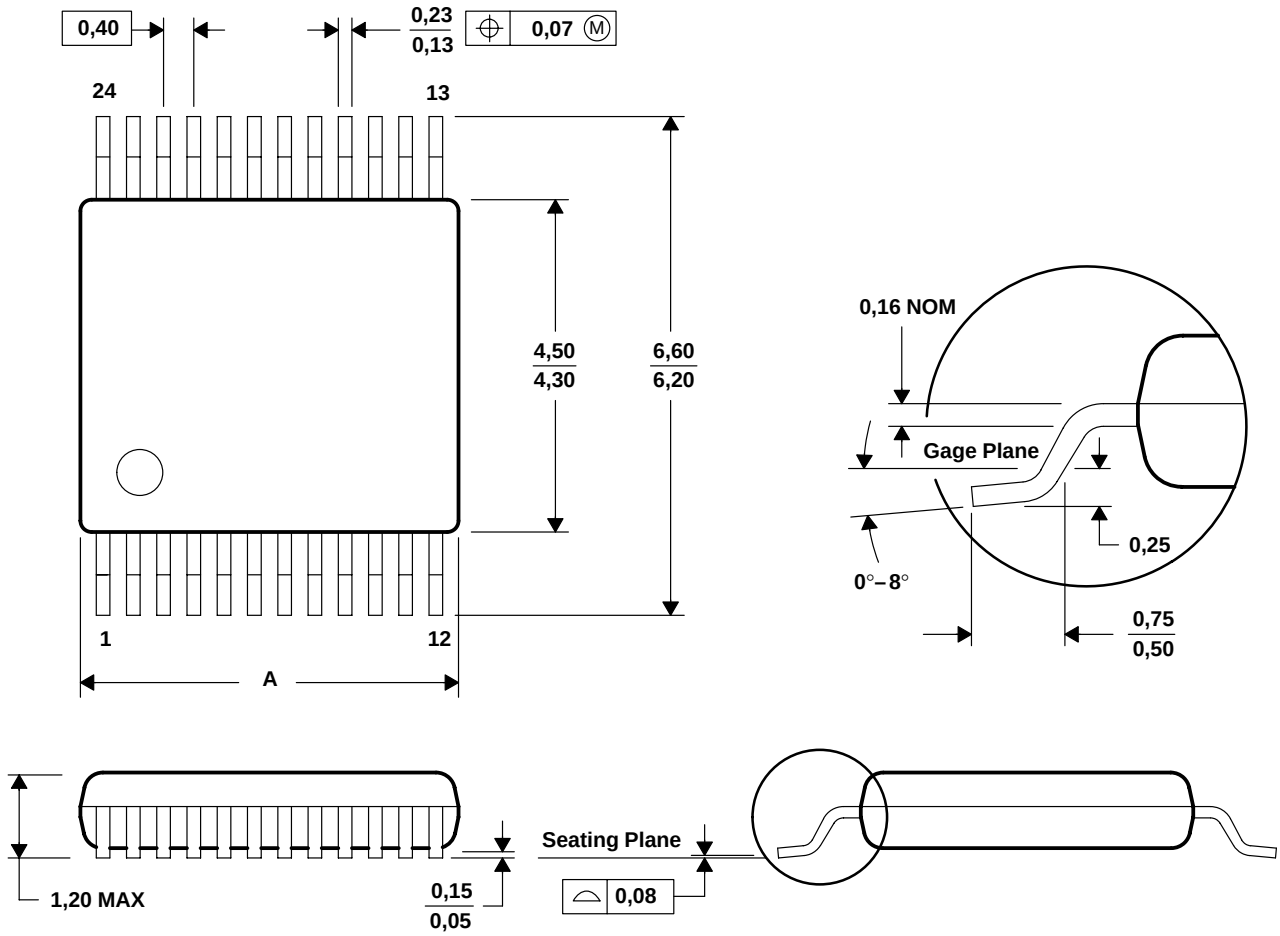

DIM \ PINS **	14	16	20	24	48	56
A MAX	3,70	3,70	5,10	5,10	9,80	11,40
A MIN	3,50	3,50	4,90	4,90	9,60	11,20

4073251/b 03/97

NOTES: A. All linear dimensions are in millimeters.
B. This drawing is subject to change without notice.
C. Body dimensions do not include mold flash or protrusion, not to exceed 0,15 per side.
D. The 24 and 48 pins falls within JEDEC MO-153 and the 14, 16, 20, and 56 pins falls within JEDEC MO-194.

DL (R-PDSO-G)** **PLASTIC SMALL-OUTLINE PACKAGE**

48-PIN SHOWN

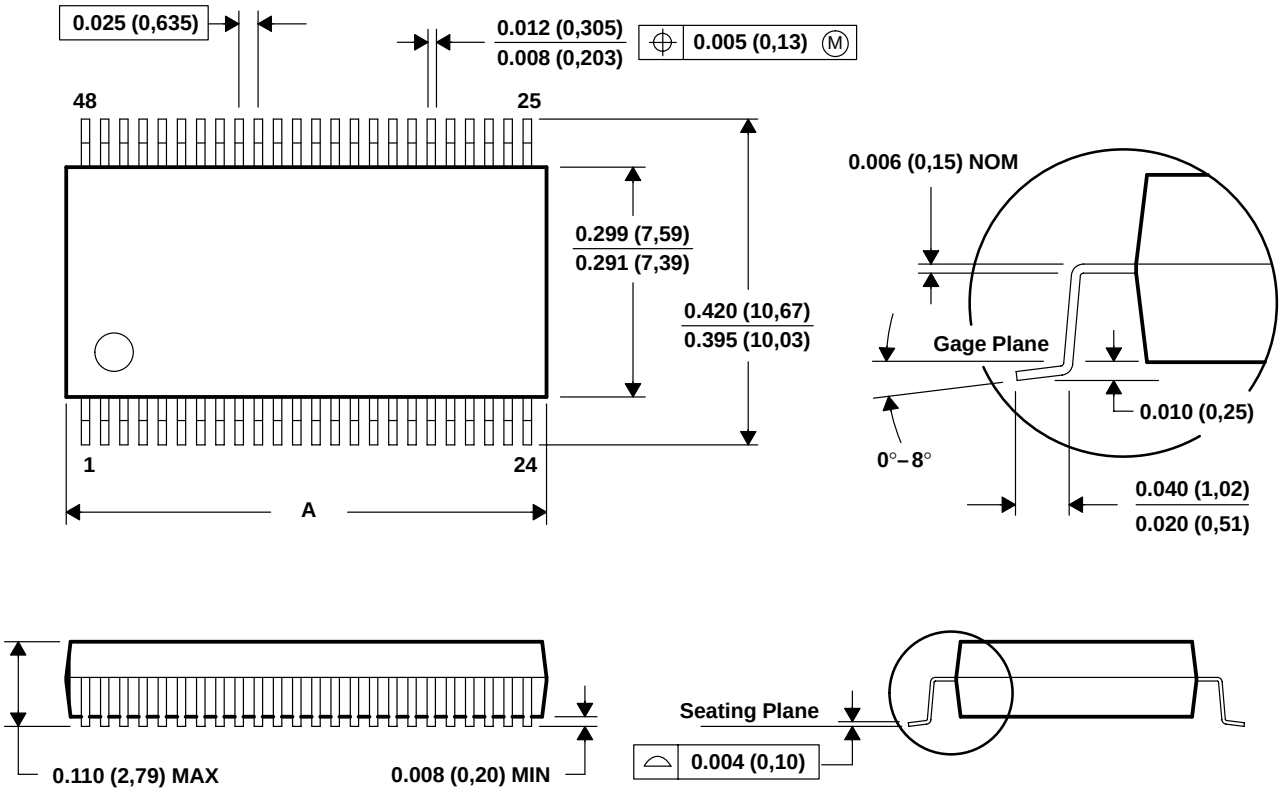

DIM \ PINS **	28	48	56
A MAX	0.380 (9,65)	0.630 (16,00)	0.730 (18,54)
A MIN	0.370 (9,40)	0.620 (15,75)	0.720 (18,29)

4040048/D 08/97

NOTES: A. All linear dimensions are in inches (millimeters).
B. This drawing is subject to change without notice.
C. Body dimensions do not include mold flash or protrusion not to exceed 0.006 (0,15).
D. Falls within JEDEC MO-118

DW (R-PDSO-G)** **PLASTIC SMALL-OUTLINE PACKAGE**

16 PIN SHOWN

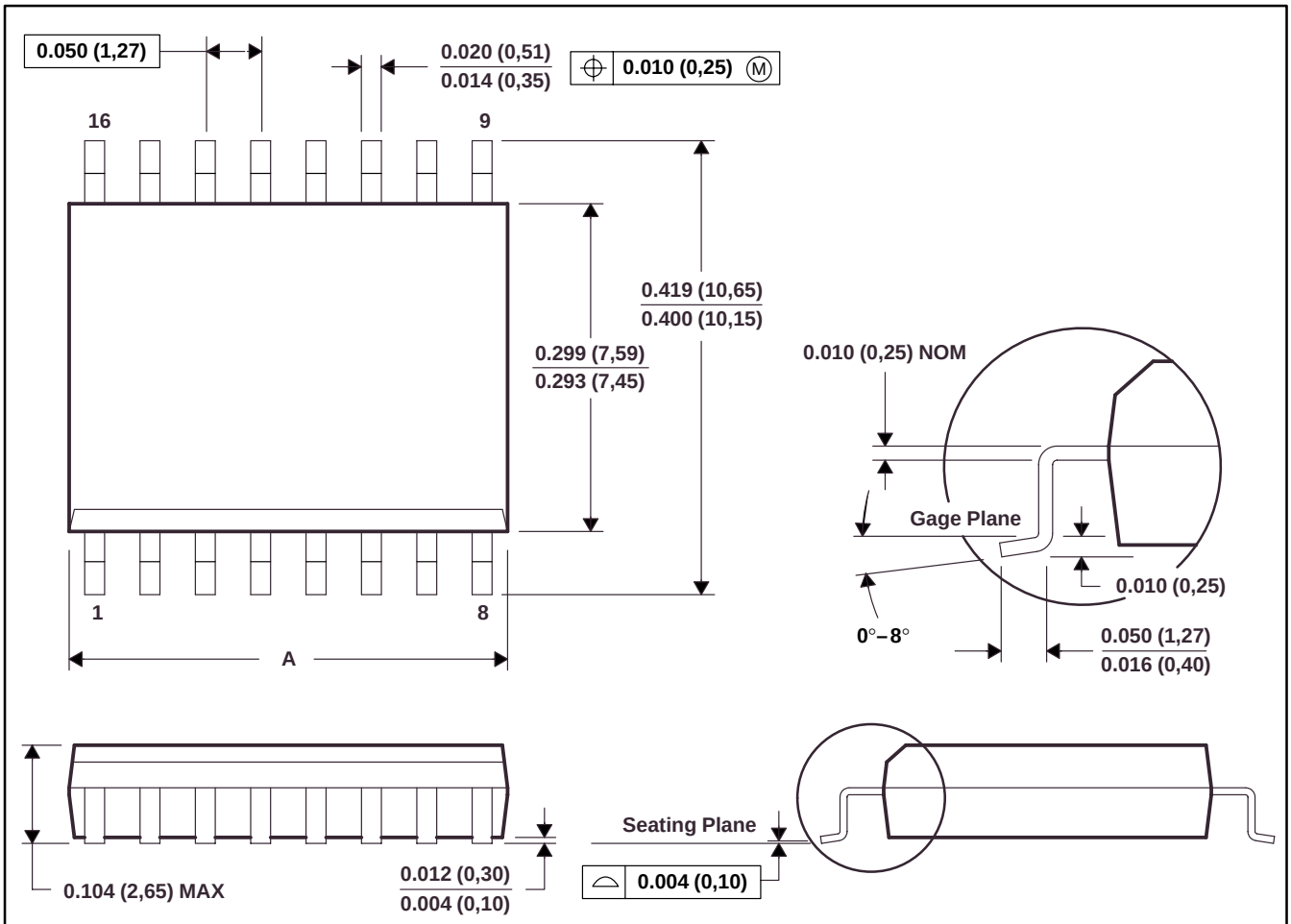

DIM \ PINS **	16	20	24
A MAX	0.410 (10,41)	0.510 (12,95)	0.610 (15,49)
A MIN	0.400 (10,16)	0.500 (12,70)	0.600 (15,24)

4040000/D 02/98

NOTES: A. All linear dimensions are in inches (millimeters).
B. This drawing is subject to change without notice.
C. Body dimensions do not include mold flash or protrusion not to exceed 0.006 (0,15).
D. Falls within JEDEC MS-013

FK (S-CQCC-N)** **LEADLESS CERAMIC CHIP CARRIER**

28 TERMINAL SHOWN

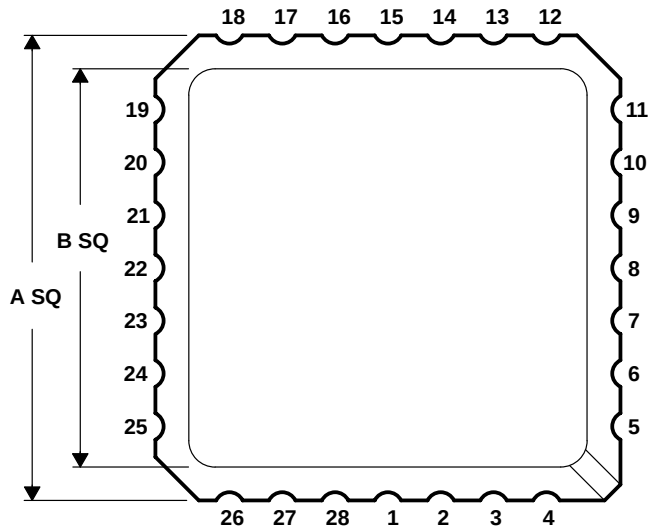

NO. OF TERMINALS **	A		B	
	MIN	MAX	MIN	MAX
20	0.342 (8,69)	0.358 (9,09)	0.307 (7,80)	0.358 (9,09)
28	0.442 (11,23)	0.458 (11,63)	0.406 (10,31)	0.458 (11,63)
44	0.640 (16,26)	0.660 (16,76)	0.495 (12,58)	0.560 (14,22)
52	0.739 (18,78)	0.761 (19,32)	0.495 (12,58)	0.560 (14,22)
68	0.938 (23,83)	0.962 (24,43)	0.850 (21,6)	0.858 (21,8)
84	1.141 (28,99)	1.165 (29,59)	1.047 (26,6)	1.063 (27,0)

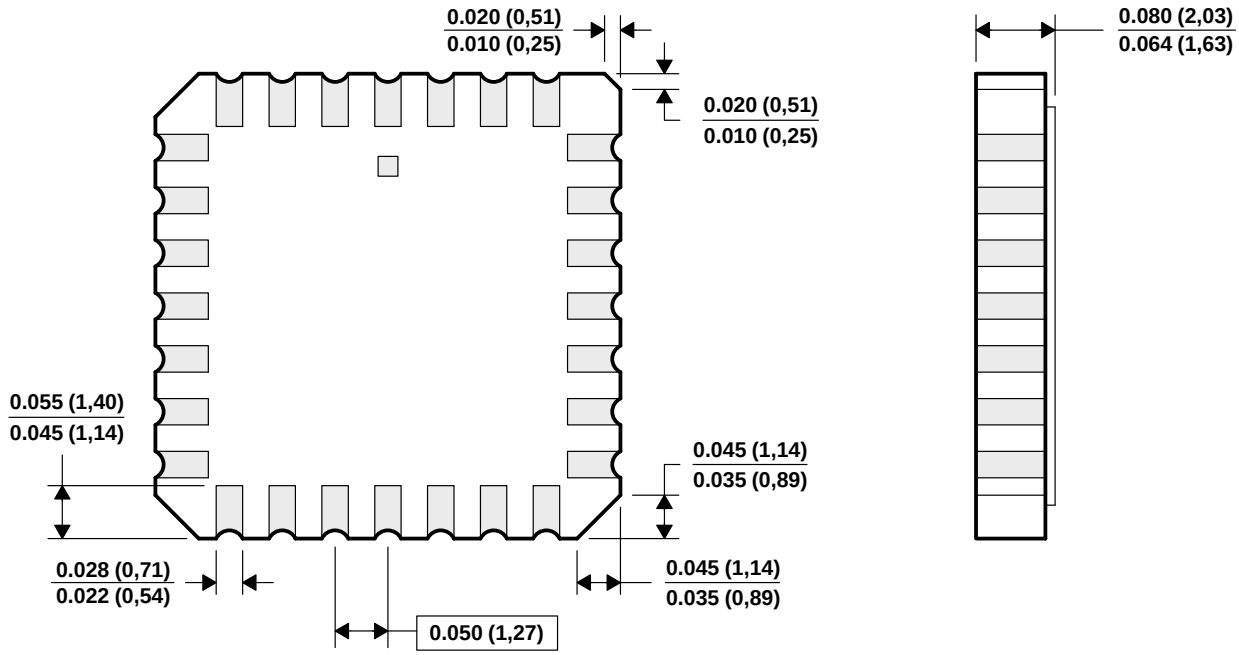

4040140 / D 10/96

NOTES: A. All linear dimensions are in inches (millimeters).
B. This drawing is subject to change without notice.
C. This package can be hermetically sealed with a metal lid.
D. The terminals are gold plated.
E. Falls within JEDEC MS-004

JT (R-GDIP-T)** **CERAMIC DUAL-IN-LINE PACKAGE**

24 PIN SHOWN

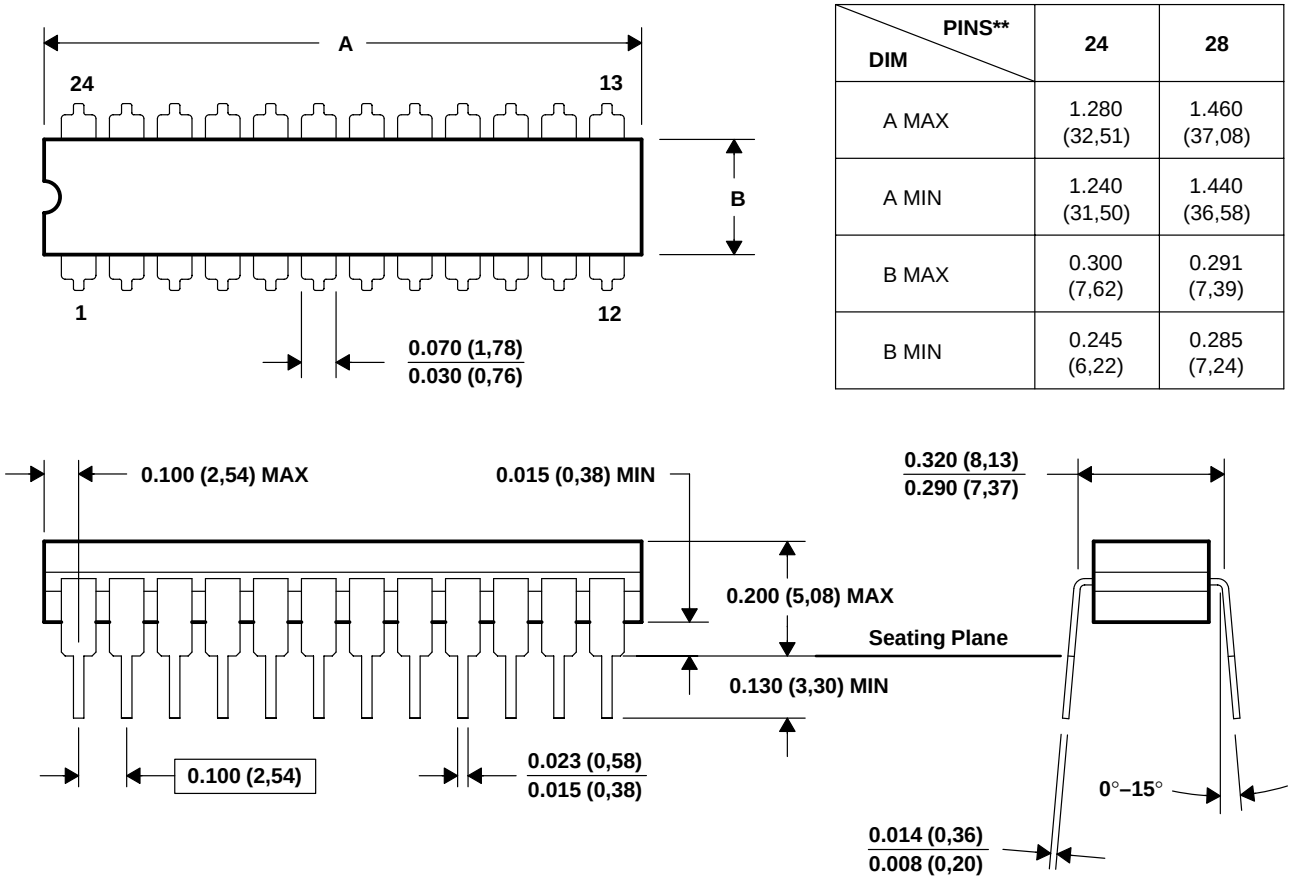

DIM \ PINS**	24	28
A MAX	1.280 (32,51)	1.460 (37,08)
A MIN	1.240 (31,50)	1.440 (36,58)
B MAX	0.300 (7,62)	0.291 (7,39)
B MIN	0.245 (6,22)	0.285 (7,24)

NOTES: A. All linear dimensions are in inches (millimeters).
B. This drawing is subject to change without notice.
C. This package can be hermetically sealed with a ceramic lid using glass frit.
D. Index point is provided on cap for terminal identification only on press ceramic glass frit seal only.
E. Falls within MIL STD 1835 GDIP-T24, GDIP-T28 and JEDEC MO-058 AA, MO-058 AB.

PW (R-PDSO-G)** **PLASTIC SMALL-OUTLINE PACKAGE**

14 PIN SHOWN

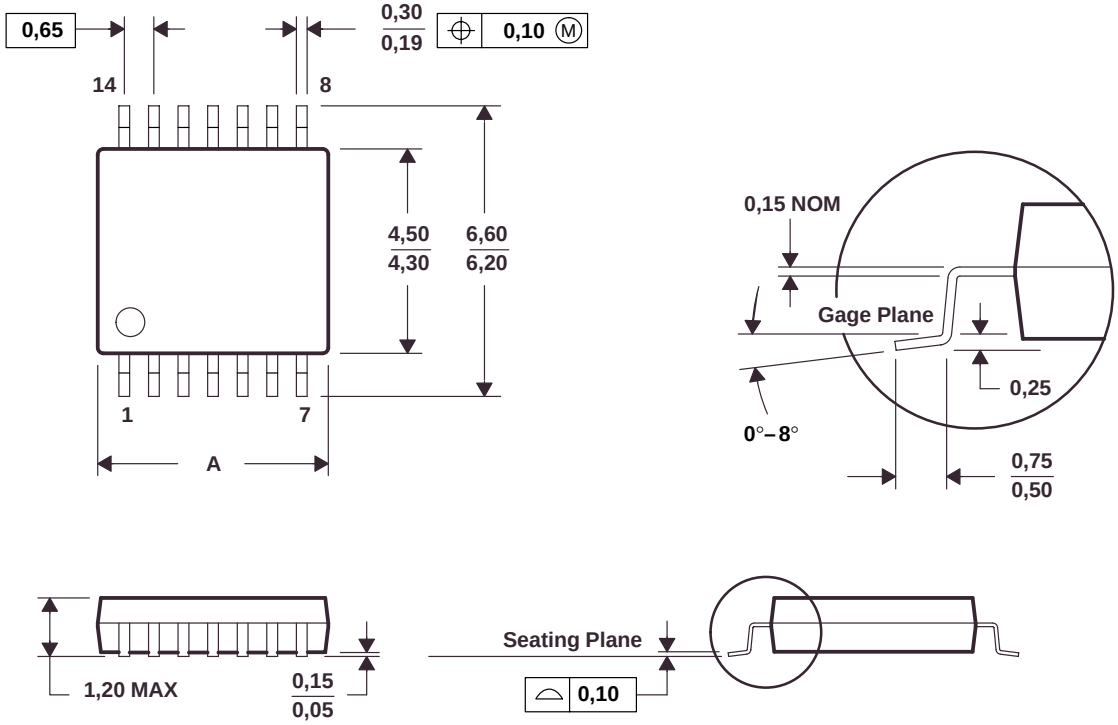

DIM \ PINS **	8	14	16	20	24	28
A MAX	3,10	5,10	5,10	6,60	7,90	9,80
A MIN	2,90	4,90	4,90	6,40	7,70	9,60

4040064/E 08/96

NOTES: A. All linear dimensions are in millimeters.
B. This drawing is subject to change without notice.
C. Body dimensions do not include mold flash or protrusion not to exceed 0,15.
D. Falls within JEDEC MO-153

W (R-GDFP-F24) **CERAMIC DUAL FLATPACK**

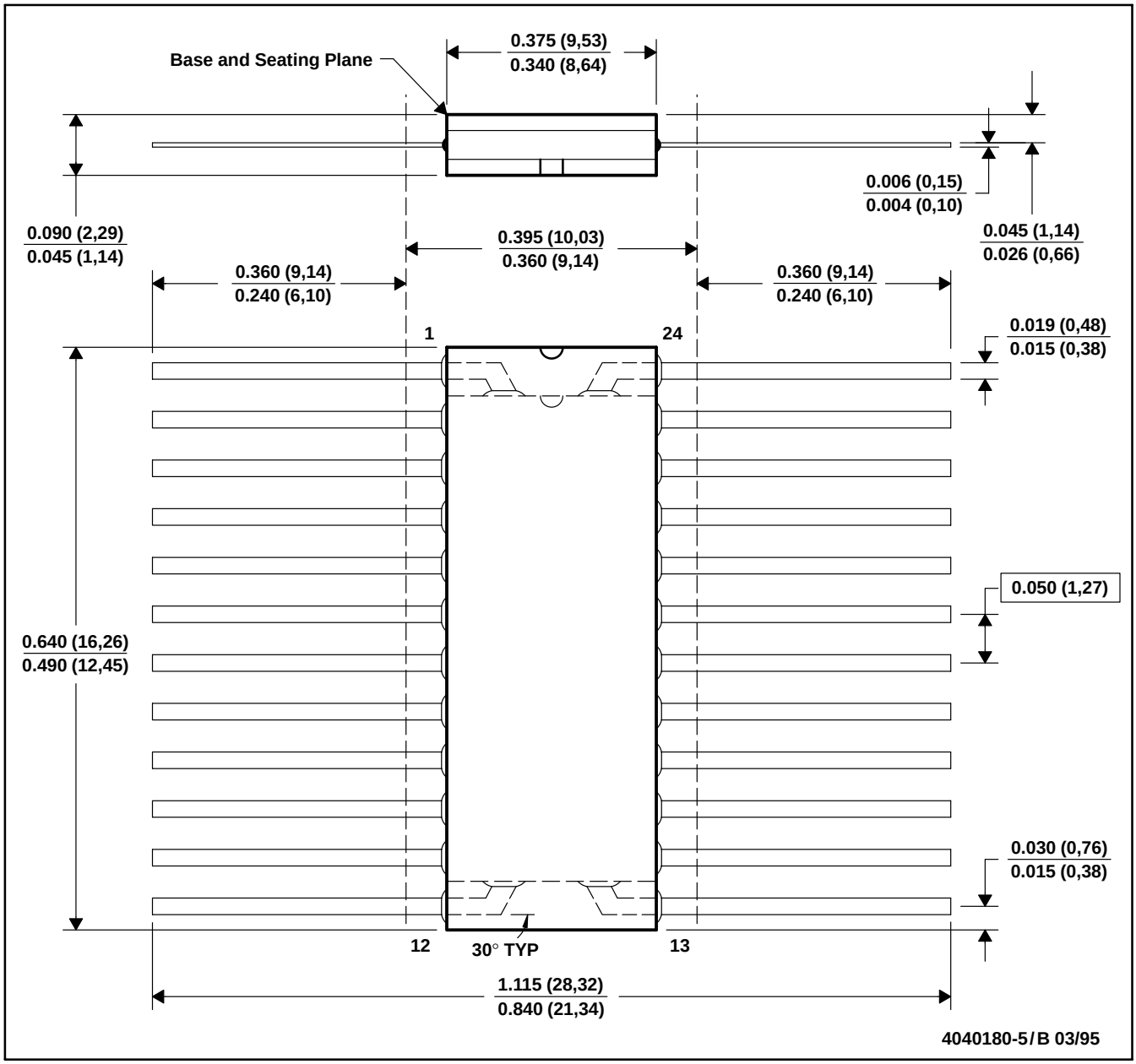

NOTES: A. All linear dimensions are in inches (millimeters).
B. This drawing is subject to change without notice.
C. This package can be hermetically sealed with a ceramic lid using glass frit.
D. Falls within MIL-STD-1835 GDFP2-F24 and JEDEC MO-070AD
E. Index point is provided on cap for terminal identification only.

WD (R-GDFP-F)** **CERAMIC DUAL FLATPACK**

48-PIN SHOWN

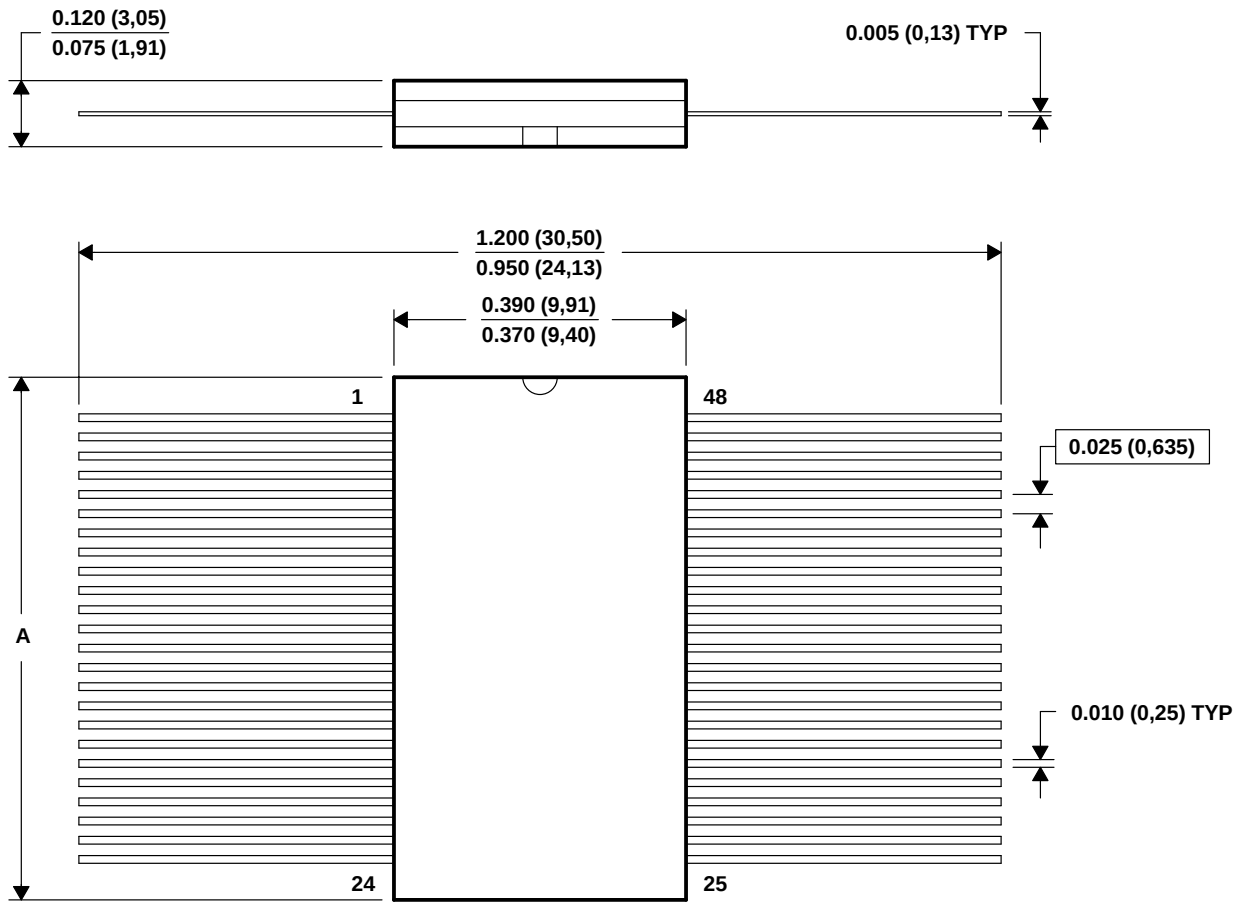

NO. OF PINS**	48	56
A MAX	0.640 (16,26)	0.740 (18,80)
A MIN	0.610 (15,49)	0.710 (18,03)

4040176/D 10/97

NOTES: A. All linear dimensions are in inches (millimeters).
B. This drawing is subject to change without notice.
C. This package can be hermetically sealed with a ceramic lid using glass frit.
D. Index point is provided on cap for pin identification only
E. Falls within MIL-STD-1835: GDFP1-F48 and JEDEC MO-146AA
GDFP1-F56 and JEDEC MO-146AB

EXHIBIT 4

Karen Rhodes

Sent: Friday, November 20, 1998 2:11 PM
To: Martha J Denton; Al Contreras; hokie@ti.com; Abbie Hill
Cc: Gary Peterson; Richard L Henson; Teruo Ishii; Doris Hu; Belle Hsu; Hea-Kyung Yoo; Mei Leng Seetoh; Ng Beng; Tiong Gan; Cornelia Duris; Judy Wood; hokie@ti.com; Thomas Lewis; John So
Subject: SCDD001B - 202 Custom Print Ticket

Categories: 202

Payment Date 12/15/98

-----Original Message-----
From: Karen Lynn Rhodes <karenr@ti.com>
Sent: None
To: Karen Lynn Rhodes <karenr@ti.com>
Subject: 19981015 - 202 Custom Print Ticket

This job has gone to print with the following instructions. Any questions, corrections, or additions please call Karen Rhodes ASAP.

==========

PRINTER: CUSTOM PRINTING - OWENSVILLE, MISSOURI
PO# 301699872 Div/CC:03-202 Job# 78410-09 Lit# SCDD001B
Please have this information on all billing and freight charges.

==========

TITLE:	CBT Data Book
RELEASED BY:	Editor: MJD3 MarCom: HOKIE
PAGE COUNT:	456
QUANTITY:	8,000
PACKAGING:	Books per carton
TRIM SIZE:	7 1/2 x 9 1/4
TEXT INK:	Black
TEXT STOCK:	37# Coosa Elite Recycled
COVER STOCK:	10pt. C1S, 3-0-0-3, Film Laminate
TEXT/COVER MEDIA:	Postscript files
BINDING:	Perfect Bind
BUSSINESS REPLY CARD:	Yes
COVER LETTER:	N/A
SHRINKWRAPPED:	N/A
BLUELINE NEEDED:	Yes
PRINTER QUOTED:	$15,989.00
TOTAL CHARGES:	$19,187.00 = TDS + TAXES (exclusive of overs)
OVERS (5%):	$ 1,134.00 = TDS + TAXES Per 1,000 copies
SENT TO PRINT:	11/13/98
BLUELINE DATE:	11/30/98
SHIP FROM PRINTER:	12/18/98
IN STOCK DATE:	Estimated 12/24/98 - NLT 12/31/98

$ 2.39 ea

==========

DELIVERY INSTRUCTIONS AS FOLLOWS:

1)TEXAS INSTRUMENTS - 8505 Forest Lane, Dallas, TX 75243

10 copies to:	Karen Rhodes	Warehouse/Mezzanine	AIR
30 copies to:	Martha Denton	M/S 8678	UPS 2nd Day
30 copies to:	Kendra Hoppie	M/S 8671	UPS 2nd Day
10 copies to:	John So	M/S 8725	UPS 2nd Day
10 copies to:	Thomas Lewis	M/S 8674	UPS 2nd Day

2)TEXAS INSTRUMENTS - 6412 Hwy 75 South, Sherman, TX 75090

150 copies to:	Judy Wood	M/S 835	UPS 2nd Day

RDM
LSN
CM

3) SHIP DIRECT FROM PRINTER - OVERSEAS - SHIP BEST METHOD

80 copies to:	Doris Hu	Taiwan
20 copies to:	Belle Hsu	Taiwan
300 copies to:	Hea-Kyung Yoo	Korea
30 copies to:	Mei Leng Seetoh	Singapore
120 copies to:	Chee Beng Ng	Malaysia
30 copies to:	Tiong Gan	Malaysia
10 copies to:	May Ch'ng	Australia
1,000 copies to:	Teruo Ishii	Japan
30 copies to:	Cornelia Duris	Germany (Deutschland)
10 copies to:	Eric Syfridis	Australia
10 copies to:	Ron Platt	Australia
10 copies to:	Peter Nutting	Australia

(Ship To:)
TEXAS INSTRUMENTS - TAIWAN LTD.
25F Taipei International

Taipei, Taiwan 106

(Sold To:)
TEAXS INSTRUMENTS
25F Taipei International
Bldg. A, No. 216, Sec 2

Taipei, Taiwan 106

80 copies to: Doris Hu
20 copies to: Belle Hsu

(Ship To:)
TEXAS INSTRUMENTS KOREA LTD.
Trade Tower 28F & 29F
159, Samsung-Dong
Kangnam-Ku, Seoul
South Korea

(Sold To:)
TEXAS INSTRUMENTS KOREA LTD.
same as ship to address

300 copies to: Hea-Kyung Yoo

(Ship To:)
TEXAS INSTRUMENTS SINGAPORE
(PTE) LTD. APR PRODUCT
Distribution Centre
No. 3 Tai Seng Drive
Singapore 1953

(Sold To:)
TEXAS INSTRUMENTS SINGAPORE
(PTE) LTD.
SC Division
990 Bendemeer Road
Singapore 1953

30 copies to: Mei Leng Seetoh

(Ship To:)
TEXAS INSTRUMENTS MALAYSIA SDN BHD
No.1 Lorong Enggang 33
Ampang/Ulu Kelang
54200 Kuala Lumpur

(Sold To:)
TEXAS INSTRUMENTS MALAYSIA
same as ship to address

120 copies to: Beng Ng
30 copies to: Tiong Gan

(Ship To:)
TEXAS INSTRUMENTS AUSTRALIA LTD
38 Gilby Road
Mount Waverley VIC
Australia

(Sold To:)
TEXAS INSTRUMENTS AUSTRALIA
same as ship to address

10 copies to: Donna Taggart

(Ship To:)
TEXAS INSTRUMENTS JAPAN
4-F Fuji Bldg. (SH)
6-12, Kita Aoyama 3-Chrome

(Sold To:)
TEXAS INSTRUMENTS JAPAN LTD
same as ship to address

Minato-Ku, Tokyo
Japan

1,000 copies to: Teruo Ishii

(Ship To:)
TEXAS INSTRUMENTS DEUTSCHLAND
GMBH
Cargo Modul B
85356 Munich Airport
Deutschland

(Sold To:)
TEXAS INSTRUMENTS DEUTSCHLAND
Haggertystrasse 1

Freising
Deutschland (GERMANY)

30 copies to: Cornelia Duris

(Ship To:) (NOT a Texas Instruments site)
ACD (Memec) - Melbourne
Unit 2, 17-19 Melrich Road
BAYSWATER VIC 3153
Australia

10 copies to: Eric Syfridis

(Ship TO:) (NOT a Texas Instruments site)
Avent Pacific - Melbourne
1st Floor
664 Mountain Highway
BAYSWATER VIC 3153
Australia

St. Louis
(314) 423-4453
Bart

Fritz-Dock

10 copies to: Ron Platt

(Ship To:) (NOT a Texas Instrumets site)
Zatek Australia Pty Ltd. - Melbourne
9-10 Bastow Place
MULGRAVE VIC 3170
Australia

10 copies to: Peter Nutting

---

6)THE HIBBERT GROUP - 4350 Kearney Street Unit J. Denver, CO 80216
Balance copies: David Hall (303) 321-4746 via TI TRUCK

---END-OF-DOCUMENT---