UNITED STATES DISTRICT COURT
MIDDLE DISTRICT OF FLORIDA
ORLANDO DIVISION

PARKERVISION, INC.,

Plaintiff,

v. Case No: 6:14-cv-687-Orl-40LRH

QUALCOMM INCORPORATED, QUALCOMM ATHEROS, INC., HTC CORPORATION and HTC AMERICA, INC.,

Defendants.
_____/

ORDER

This cause comes before the Court on the following:

1. Plaintiff's Motion for Claim Construction (Doc. 148), filed June 15, 2015;
2. Defendant's Claim Construction Brief (Doc. 171), filed July 15, 2015;
3. Plaintiff's Additional Claim Construction Brief (Doc. 317), filed September 27, 2019; and
4. Defendant's Responsive Claim Construction Brief (Doc. 324), filed October 11, 2019.

The Court held *Markman* hearings on August 12, 2015 (Doc. 198), and November 12, 2019 (Doc. 333).[1]

[1] *See generally Markman v. Westview Instruments, Inc.*, 517 U.S. 370 (1996).

Contents

I. BACKGROUND 3
II. LEGAL STANDARDS FOR CLAIM CONSTRUCTION 5
III. AGREED TERMS 8
IV. DISPUTED TERMS 10
A. matched filtering/correlating module 10
1. The First Markman Hearing 11
2. The Second Markman Hearing 12
3. The '177 Patent 16
4. The Prosecution History 18
5. The Structural Details 20
B. switch/switch module 24
1. Broadest Reasonable Interpretation compared with Phillips Standard 26
2. Construction of Switch/Switch Module: First Markman Hearing 29
3. Second Markman Hearing 30
C. to gate/gating 32
1. "to gate/gating" 34
2. "gating means" 38
D. "summer" 40
1. Second Markman Hearing 42
2. Construction of Summer 44
E. "summing means" 45
F. "bias signal" 46
1. The Board's Construction 47
2. Construction of Bias Signal 49
G. "desired harmonics" and "desired signal" 51
H. "said input signal" 53
V. CONCLUSION 58

I. BACKGROUND

This litigation has a complex history, beginning with Plaintiff ParkerVision, Inc.'s ("**ParkerVision**"), Complaint alleging the infringement of seven patents. (Doc. 1). In the First Amended Complaint, ParkerVision added four patents. (Doc. 26). [2] As is customary, the parties provided the Court with a technology tutorial (Doc. 157), and the Court held the initial claim construction hearing (Doc. 198). Following the claim construction hearing, the parties filed a Joint Motion to Dismiss Certain Claims and Covenant not to Sue (Doc. 228), which the Court granted (Doc. 246). The Motion to Dismiss informed the Court that certain terms discussed at the claim construction hearing no longer required interpretation by the Court. (Doc. 228). As the case progressed, the parties stipulated to the dismissal of the Samsung Defendants (Doc. 255), and the Court granted the dismissal (Doc. 256). The litigation was ultimately stayed pending Inter Partes Review ("**IPR**"). (Docs. 255, 256).

ParkerVision appealed three final written decisions of the U.S. Patent Trial and Appeal Board in which the Board held certain claims of the '940 patent unpatentable. *ParkerVision, Inc. v. Qualcomm, Inc*., 903 F.3d 1354, 1357 (Fed. Cir. 2018). Qualcomm had challenged the apparatus and method claims of the '940 patent as obvious. *Id.* at 1358. The Board agreed that the apparatus claims would have been obvious. *Id.* at 1359. The Federal Circuit affirmed the Board's finding that claims 4, 21, 22, 23, 100, 113–16, 118, 119, 281, 283–86, 288, 289, 293, 309–12, 314–15, and 319 are unpatentable. *Id.* at 1362. The Federal Circuit also affirmed the Board's determination that claims 1, 2, 18,

---

[2] ParkerVision has elected to proceed with the '940, '372, '907, and '177 patents, which were disclosed in the First Amended Complaint and Plaintiff's Claim Construction Brief. (Doc. 284, pp. 2–3; Docs. 124, 148).

81–84, 86, 88–91, 93, 94, 251–54, 256, 258–61, 263, and 264 are unpatentable. *Id*. at 1364.

As for the method claims, the Federal Circuit agreed with the Board's determination that Qualcomm's petitions were deficient because "they 'd[id] not speak to whether a person of ordinary skill in the art would have any reason to' operate" the prior art in a manner that generates a plurality of integer-multiple harmonics. *Id*. at 1363. Accordingly, the court affirmed the Board's determination that claims 25, 26, 363–66, 368, 369, and 373 were not proven unpatentable. *Id*. As noted above, ParkerVision stipulated in its briefing and at oral argument that claims 88–92 of the '372 patent are abandoned.

After the Federal Circuit issued its opinion, ParkerVision served Qualcomm with Supplemental Infringement Contentions, including updated infringement contention charts, that included each of the '940, '372, '907, and '177 patents and each claim identified for those four patents. (Doc. 284, p. 4).[3] Litigation ensued over whether ParkerVision had abandoned some of the claims included in the infringement contention chart. (Docs. 284, 285, 289). The Court determined that ParkerVision had not abandoned the claims and held ParkerVision may proceed with the following patents and claims:

'940 Patent (10 claims): 24, 25, 26, 331, 364, 365, 366, 368, 369, 373

'372 Patent (12 claims): 95, 96, 99, 100, 103, 104, 107, 108, 109, 110, 126, 127

'907 Patent (7 claims): 1, 2, 10, 13, 14, 15, 23

'177 Patent (11 claims): 1, 2, 3, 5, 7, 8, 9, 10, 11, 12, 14

[3] The case was stayed for three years due to the IPR and subsequent appeal

(Doc. 297).[4]

II. LEGAL STANDARDS FOR CLAIM CONSTRUCTION

The Court construes a patent claim as a matter of law. *Phillips v. AWH Corp.*, 415 F.3d 1303, 1330 (Fed. Cir. 2005) (en banc). The Federal Circuit directs district courts construing claim terms to focus on the intrinsic evidence–that is, the claims, specification, and prosecution histories–because intrinsic evidence is "the most significant source of the legally operative meaning of disputed claim language." *Vitronics Corp. v. Conceptronic, Inc*., 90 F.3d 1576, 1582 (Fed. Cir. 1996); *Markman v. Westview Instruments, Inc*., 52 F.3d 967, 979 (Fed. Cir. 1995) (en banc), *aff'd*, 517 U.S. 370 (1996). Generally, the Court accords the words of a claim "their ordinary and customary meaning," which is "the meaning that the term would have to a person of ordinary skill in the art in question at the time of the invention." *Phillips*, 415 F.3d at 1312–13. Persons of ordinary skill in the art do not read the claim term in isolation, but in the context of the entire patent. *Id*. at 1313. If the ordinary meaning of claim language is "readily apparent even to lay judges," then claim construction requires "little more than the application of the widely accepted meaning of commonly understood words." *Id*. at 1314. But because the meaning of a claim term as understood by a person skilled in the art is often not immediately apparent, the Court looks to both intrinsic evidence (the words of the claims themselves, the specification, and the prosecution history) and extrinsic evidence

---

[4] The parties jointly moved for dismissal of the following patents: U.S. Patent Nos. 6,580,902; 6,704,549; 6,873,836; 7,050,508; 7,194,246; and 7,966,012. (Doc. 228). They agreed the Court need not construe the following terms: sub-sample or sub-sampling; string of multiple pulses; repeater; sensing or sensing said protocol; modulation and frequency selection module; and pulse shaper. (*Id*.).

(sources such as dictionaries and expert testimony). *Id*.; *Finisar Corp. v. DirecTV Grp., Inc*., 523 F.3d 1323, 1328 (Fed. Cir. 2008).

The patent's specification is "the single best guide to the meaning of a disputed term," as it may reveal that the patentee intended a special definition to apply to a claim term that differs from its ordinary meaning or that the patentee intentionally disclaimed or disavowed the claim's scope. *Phillips*, 415 F.3d at 1315–16 (internal quotation marks omitted). The Court also considers the prosecution history, which is created by the patentee to explain and obtain the patent. *Id*. at 1317. The prosecution history consists of the complete record of proceedings before the Patent and Trademark Office ("**PTO**") and the prior art cited during the examination of the patent. *Id*. Unlike the specification, which is a final product, the prosecution history is less useful in claim construction because it represents the ongoing negotiations between the PTO and applicant. *Id*.

The Court also looks at the prosecution history "to determine whether the applicant clearly and unambiguously 'disclaimed or disavowed'" an interpretation of claim scope in order to obtain the patent grant. *Middleton, Inc. v. Minn. Mining and Mfg. Co.*, 311 F.3d 1384, 1388 (Fed. Cir. 2002) (quoting *Standard Oil Co. v. Am. Cyanamid Co.*, 774 F.2d 448, 452 (Fed. Cir. 1985)). A patentee disclaims an interpretation by "clearly characterizing the invention in a way to try to overcome rejections based on prior art," as opposed to simply describing features of the prior art without distinguishing the claimed invention based on those features. *Comput. Docking Station Corp. v. Dell*, *Inc*., 519 F.3d 1366, 1374–75 (Fed. Cir. 2008). Thus, the Court protects the public's reliance on the definitive statements made during the prosecution by precluding the patentee from "recapturing" an interpretation disclaimed during prosecution through claim construction.

Id. at 1374 (quoting *Omega Eng'g, Inc. v. Raytek Corp*., 334 F.3d 1314, 1323 (Fed. Cir. 2003)). However,

> [I]f the specification expressly defines a claim term and remarks made to distinguish claims from the prior art are broader than necessary to distinguish the prior art, the full breadth of the remark is not a clear and unambiguous disavowal of claim scope as required to depart from the meaning of the term provided in the written description.

Id. at 1375 (internal quotation marks omitted) (quoting *3M Innovative Props*. *Co*. *v. Avery Dennison Corp*., 350 F.3d 1365, 1373 (Fed. Cir. 2003)).

Although "less significant than the intrinsic record," extrinsic evidence is helpful. *Phillips*, 415 F.3d at 1317 (internal quotation marks omitted). However, expert testimony about claim terms that is conclusory, unsupported, or "clearly at odds" with the intrinsic evidence is not useful. *Id*. at 1318 (internal quotation marks omitted). Moreover, while dictionaries and treatises are relevant, the Court must ensure that the dictionary definition does not contradict a definition "found in or ascertained by a reading of the patent documents." *Id*. at 1322–23 (quoting *Vitronics*, 90 F.3d at 1584 n.6). "In sum, extrinsic evidence may be useful to the court, but it is unlikely to result in a reliable interpretation of patent claim scope unless considered in the context of the intrinsic evidence." *Phillips*, 415 F.3d at 1319. In the instant case, the parties agree that the Court need not consider extrinsic evidence to construe the claim terms in dispute, and neither party has presented extrinsic for the Court's consideration.

Several other principles guide the Court's construction of claim terms. First, the Court presumes that the same terms appearing in different portions of the claims have the same meaning, unless the specification and prosecution history clearly demonstrate otherwise. *Fin Control Sys. Pty, Ltd. v. OAM, Inc*., 265 F.3d 1311, 1318 (Fed. Cir. 2001).

While the "[i]nterpretation of a disputed claim term requires reference to the other claims," *Georgia-Pacific Corp. v. U.S. Gypsum Co*., 195 F.3d 1322, 1331 (Fed. Cir. 1999)), "the presence of a dependent claim that adds a particular limitation raises a presumption that the limitation in question is not found in the independent claim," *Liebel-Flarsheim Co. v. Medrad, Inc*., 358 F.3d 898, 910 (Fed. Cir. 2004). Courts are further cautioned that "a construction that renders the claimed invention inoperable should be viewed with extreme skepticism." *Talbert Fuel Sys. Patents Co. v. Unocal Corp*., 275 F.3d 1371, 1376 (Fed. Cir. 2002) (citation omitted), vacated and remanded on other grounds, 537 U.S. 802 (2002).

Finally, district courts have an obligation to construe terms when it is necessary to resolve a genuine and material legal dispute between the parties. See *O2 Micro Int'l Ltd. v. Beyond Innovation Tech. Co., Ltd*., 521 F.3d 1351, 1361–62 (Fed. Cir. 2008); *E-Pass Techs., Inc. v. 3Com Corp*., 473 F.3d 1213, 1219 (Fed. Cir. 2007) ("[A]ny articulated definition of a claim term ultimately must relate to the infringement questions that it is intended to answer."). The party asking the Court to construe a claim term must demonstrate that the construction is both necessary and correct; that is, construction of the claim term must be fundamental to issues of infringement or invalidity, and the Court may not issue an advisory opinion. *IP Cleaning S.p.A. v. Annovi Reverberi S.p.A*., No. 08-cv-147, 2008 U.S. Dist. LEXIS 102312, at *3 (W.D. Wis. Dec. 17, 2008).

III. AGREED TERMS

The parties have reached agreement as to the proper construction of the following terms:

Claim Term	Agreed Construction
"a shaping means" '372 Patent	Function: shaping said first control signal so as to have a plurality of pulses. Structure: '372 Patent at Figures 39A, 40A, 41 and equivalents thereof
"harmonically rich signal" '940 and '372 Patents	A signal comprised of a plurality of harmonics
"inversion means" '371 Patent	Function: Inverting the information signal and outputting an inverted information signal (claim 88) Inverting said combined signal and outputting an inverted combined signal (claim 95) Inverting the first information signal and outputting a first inverted information signal (claim 99) Inverting the second information signal and outputting a second inverted information signal (claim 99) Inverting said first combined signal and outputting a first inverted combined signal (claim 103) Inverting said second combined signal and outputting a second inverted combined signal (claim 103) Structure: '372 Patent at Figures 39A, 67, 68, 70, and 72A and equivalents thereof
"dynamically varied based on a measurement of one or more circuit parameters using digital	"dynamically varied, based on a measurement of one or more circuit

circuitry” ‘177 Patent	parameters, using digital circuitry”
“harmonic”/”harmonics” ‘940 Patent: Claims 24, 25, 26, 331, 364, 365, 366, 368, 369, 373 ‘372 Patent: Claims 95, 96, 99, 100, 103, 104, 107, 108, 109, 110, 126, 127	“frequency or tone that, when compared to its fundamental or reference frequency or tone, is an integer multiple of it and including the fundamental frequency as the first harmonic”

IV. DISPUTED TERMS

The parties have identified ten (10) disputed claim terms. (Doc. 341). Some of the disputed claim terms were briefed in conjunction with the second *Markman* hearing (*Id*. Ex. A) and others were briefed for the first *Markman* hearing. (*Id*. Ex C). The Court will address the disputed claim terms in the order presented by the parties at the *Markman* hearings.

A. matched filtering/correlating module

Claim Term	Plaintiff’s Construction	Defendant’s Construction
“matched filtering/ correlating module” ‘177 Patent: Claims 1, 2, 3, 5, 7, 8, 9, 10, 11, 12, 14	“substantially linear time-variant circuitry that samples a modulated RF (radio frequency) carrier signal at an aliasing rate using a switch with an independent control input driven by a control signal with a non-negligible, periodic aperture, such that the samples, having non-negligible available energy, are accumulated and transferred to a significant load while the switch is closed and discharged through the load while the switch is open, thereby transferring substantial available real power from	“a multiplier, that multiplies the input signal by a time-delayed version of itself, followed by a switch and an integrator”

	the modulated RF carrier signal to the load and producing a down-converted signal with enhanced signal-to-noise power ratio”	

1. The First Markman Hearing

ParkerVison’s original proposed construction of this term is as follows: “operating on an EM (electromagnetic) signal with a matched filtering and/or correlating process or processor to produce an enhanced signal to noise ratio for the processed signal.” (Doc. 148, p. 23). At the original *Markman* hearing, ParkerVision framed the dispute as follows: “should this term be limited to the embodiment disclosed in the specification as the defendant asserts, or is the term actually broader than the one disclosed embodiment?” (Doc. 211, 21:13–15).

Qualcomm defended their proposed construction by dissecting the language of the single embodiment:

> the ‘177 specification describes the matched filtering/correlating module (14900) as a system that includes a multiplier (14902) that multiplies the input signal (S,(t)) by a time-delayed version of itself (S,(t-τ), followed by a switch (14904) and an integrator (14906). The specification describes no other embodiments of a matched filtering/correlating module.

(Doc. 171, p. 3). Additionally, Qualcomm relied upon *Williamson v. Citrix Oneline, LLC*, 792 F.3d 1339 (Fed. Cir. 2015), for the proposition that 35 U.S.C. § 112, ¶ 6 applies and limits the term to the structure described in the ‘177 patent. (Doc. 171, p. 4).[5] Qualcomm

[5] *Williamson* was decided after ParkerVision filed their claim construction brief.

argued ParkerVision was urging the Court to give the claimed device a purely *functional* construction, without any structure. (*Id*.). Defendant contended "[t]he claimed "matched filtering/correlating module" is a *device*, not an *operation*." (*Id.* at pp. 4–5). Accordingly, Qualcomm contends "the claim in the '177 patent is a structural or apparatus claim.[6] And the term matched filter/correlating module is a structural term." (Doc. 211, 28:12–14). Thus, the term is construed as a structure, not as a function. (*Id*. at 28:15-17).[7]

2. The Second Markman Hearing

a. ParkerVision's Position on Embodiments

The second *Markman* hearing occurred approximately three years after the first hearing. Counsel for ParkerVision, while contesting the applicability of *Williamson*, explained that the revised claim construction is long because ParkerVision has attempted to cover the range of embodiments disclosed in the patent. (Doc. 334, 105:7–10). ParkerVision argued that even if § 112, ¶ 6 did apply, the construction would be broader to capture all embodiments and not confined to a single embodiment as Qualcomm

---

6 Process claims are typically drafted in terms of a set of actions to be performed. *See, e.g.*, *Cross Med. Prods., Inc. v. Medtronic Sofamor Danek, Inc.*, 424 F.3d 1293, 1311 (Fed. Cir. 2005). In contrast, product or apparatus claims are usually drafted in terms of a set of physical structures connected in a way that performs some action.

7 When § 112, ¶ 6 is found to apply to claim language, then the claim term is construed identifying the "function" associated with the claim language, and then identifying the corresponding "structure" in the specification associated with that function. The claim is construed to be limited to those corresponding structures and their equivalents. Thus, parties frequently attempt to invoke § 112, ¶ 6 as a way to narrow the scope of a patent to the particular technologies disclosed in the specification.

suggests. (*Id.* at 106:4–5).[8] They contend that Defendant's proposed construction, by focusing on one embodiment (FIG. 149), improperly excludes other embodiments that can reasonably be interpreted to be included in the claim. (Doc. 317, p. 22); *see also Oatey Co. v. IPS Corp.*, 514 F.3d 1271, 1277 (Fed. Cir. 2008).

ParkerVision avers Qualcomm's proposed construction impermissibly reads limitations from one embodiment (FIG. 149) into the claims. *See Hill-Rom Servs. v. Stryker Corp*., 755 F.3d 1367, 1371 (Fed. Cir. 2014). That is, the patent provides that Figure 149 "illustrates **an example** gated matched filtering/correlating system" and is "**an embodiment**." ('177, col. 131:53–64) (emphasis added). Therefore, it is error to read the limitations found in Figure 149 into the claims. ParkerVision supports this point by examining the other embodiments.

For example, ParkerVision concedes that Figure 151 is an approximation of Figure 149, but they contend Figures 151 and 153 are examples of a matched filter/correlator:

> FIG. 151 illustrates an example **finite time integrating system** 15100, which can be used to implement method 15000" (Ex. 13 ('177 Patent) at 133:22–23), where method 15000 is "an example method . . . for down-converting an electromagnetic signal using a **matched filtering/correlating operation"** (*Id.* at 132:51–53)
> . . .
>
> FIG. 153 illustrates an example **RC processing system** 15300, which can be used to implement method 15200" (Ex. 13 ('177 Patent) at 134:31–32), where method 15200 is an "example method . . . for down-converting an electromagnetic signal **using a matched filtering/correlating operation."** Id. at 133:59–61.

[8] The Court is not persuaded that § 112, ¶ 6 applies. However, even if it does, ParkerVision is correct that Figure 149 is not the only embodiment of the invention.

(Doc. 317, pp. 22, 24) (emphasis added). The embodiments depicted in Figures 151 and 153 lack a multiplier and time-delayed version of the input signal–limitations contained in Qualcomm's proposed construction.[9] (*Id.* at pp. 23–24). Thus, Plaintiff argues their proposed construction takes into consideration the multiple embodiments of matched filtering/correlating modules. (Doc. 317, p. 24).

b. Qualcomm's Position on Embodiments

Qualcomm submits that ParkerVision is urging the Court to re-write the four words "matched filter/correlator module" to impermissibly cover a finite time integrator and RC processing system. (Doc. 324, p. 17); *see K-2 v. Salomon*, 191 F.3d 1356, 1364 (Fed. Cir. 1999) ("Courts do not rewrite claims; instead we give effect to the terms chosen by the patentee."). That is, Figure 151 depicts a "finite time integrating system," and Figure 153 depicts a "RC processing system," and Qualcomm contends that both depict different unclaimed embodiments, "not the 'matched filtering/correlating module' recited in the '177 patent claim." (*Id.* at p. 16). Qualcomm asserts that "the patent consistently distinguishes between 'matched filter/correlator' and alternatives like the 'RC processing system' and 'a finite time integrator.'" (*Id*. at p. 17).

Qualcomm reminds ParkerVision of the position they took before Judge Dalton in *ParkerVision I.* In the earlier case, ParkerVision stated, "the inventors of the patents-in-suit coined the term '**finite time integrating operation' as an alternative solution to matched filtering/correlating processors."** (Doc. 324, p. 18) (emphasis in original), *ParkerVision v. Qualcomm,* No. 3:11-CV-719, 2013 WL 633077, at *11 (M.D. Fla. Feb.

[9] Doc. 26-11, pp. 200-201.

20, 2013).[10] At the claim construction hearing in *ParkerVision I*, Plaintiff distinguished Figures 151 and 149 by defining finite time integration operation as using an approximation of the carrier whereas the matched filtering/correlating operation uses the carrier itself. (*Id*. at p. 19); *ParkerVision*, 2013 WL 633077, at *12.

In *ParkerVision I* Judge Dalton made the following distinction:

> The ′845 Patent teaches those skilled in the art that the disclosed invention can be implemented using, among other things, a "matched filtering/correlating operation" **and** a "finite time integrating operation." ′845 Patent col. 128 ll. 44–48. **Both of these** embodiments operate by accumulating the energy of a carrier signal and using the accumulated energy to form a down-converted signal. *Id*. at col. 128 ll. 26–51.
>
> . . .
>
> The "matched filtering/correlating" operation and "finite time integrating operation" differ in that the first operation involves "convolving an approximate half cycle of the carrier signal with a representation of itself," *Id.* at col. 129 ll. 30–34
>
> . . .
>
> A "finite time integrating operation," on the other hand, involves convolving the carrier signal with a "half sine impulse response," a "rectangular impulse response," or a "step function having a duration that is substantially equal to the time interval defined for the waveform, typically a half cycle of the electromagnetic signal." *See id*. at col. 137 ll. 60–65; *see also id*. at col. 130 ll. 35–40; *id*. at col. 131 ll. 28–30.
>
> . . .
>
> The ′845 Patent therefore teaches that a finite time integrating operation involves convolving the carrier signal with a half sine impulse response, a rectangular impulse response, a step function, a triangular response, or a nearly sinusoidal response.

---

[10] *ParkerVision I* involved U.S. Patent No. 7,724,845, and it included the same description of Figures 148–153 as are found in the '177 patent. (Doc. 324, p. 18). The parties disputed the construction of "finite time integrating." (*Id*.).

ParkerVision, 2013 WL 633077, at *12–13 (emphasis added). Judge Dalton found both are embodiments of the invention and rejected Qualcomm's proposed construction which limited a "'finite time integrating operation' to energy that is transferred during a single aperture period." *Id*. at *13. claim. Judge Dalton also declined to import a list of electrical components suggested by Qualcomm into the construction. *Id*.

Notably, ParkerVision argued at the second *Markman* hearing held in the instant case that the '845 patent at issue in *ParkerVision I* is not at issue here. (Doc. 334, 110:8–13). The issue in *ParkerVision I* was very narrow: Qualcomm argued Plaintiff's construction of finite time integrating cannot be correct because it would render the terms matched filter/correlation operation and finite time integrating operation identical. (*Id*. at 110:14–19). ParkerVision responded by demonstrating the difference between Figures 149 and 151. (*Id.* at 110:20–24). Judge Dalton's ruling addressed a different patent and a different issue than is involved here. Accordingly, the Court will turn its attention to the '177 patent.[11]

3. The '177 Patent

The '177 patent provides the following overview of the invention:

> Embodiments of the present invention down-convert an electromagnetic signal by repeatedly performing a matched filtering or correlating operation on a received carrier signal. Embodiments of the invention operate on or near approximate half cycles (e.g.,½, 1½, 2½, etc.) of the received signal. The results of each matched filtering/correlating process are accumulated, for example using a capacitive storage device, and used to form a down-converted version of the electromagnetic signal. In accordance with embodiments of the invention, the matched filtering/correlating process can be performed at a sub-harmonic or fundamental rate.

[11] For the same reasons, judicial estoppel is inapplicable.

> Operating on an electromagnetic signal with a matched filtering/correlating process or processor produces enhanced (and in some cases the best possible) signal-to-noise ration (SNR) for the processed waveform. A matched filtering/correlating process also preserves the energy of the electromagnetic signal and transfers it through the processor.

(Doc. 26-11: 130:23–40).

Three embodiments of the invention are discussed in the patent:

> Since it is not always practical to design a matched filtering/correlating processor with passive networks, the sub-sections that follow also describe how to implement the present invention using a finite time integrating operation and an RC processing operation. **These embodiments of the present invention** are very practical and can be implemented using existing technologies, for example but not limited to CMOS technology.

(*Id*.; 130:40–48) (emphasis added).

Figure 149, which Qualcomm contends is the only disclosed embodiment of the invention, "illustrates an example gated matched filtering/correlating system." (*Id*., 131:53–54). ParkerVision advocates that the '177 patent also teaches that Figure 151 **"**illustrates an example finite time integrating system **15100,** which can be used to implement method **15000**" (*Id.*, 133:22–23) where method **15000** is "an example method . . . for down-converting an electromagnetic signal using a *matched filtering/correlating* operation" (*Id.*, 132:51-53). Where Qualcomm's proposed construction of matched filtering/correlating module requires a multiplier and a time-delayed version of the input signal, these limitations are missing from Figures 151 and 153.[12] Accordingly,

[12] The '177 patent states that Figure 153 is an example RC processing system which can be used to implement method **15200**, and Figure 152 is an example method **15200** for down-converting an electromagnetic signal using a matched filtering/correlating operation. (Doc. 26-11; 134:31–32; 133:59–61).

ParkerVision contends that Qualcomm's proposed construction improperly imports a limitation into the claim by ignoring other embodiments.

The Court agrees with ParkerVision that Figures 151 and 153 are additional embodiments of matched filtering/correlating module. It would be improper to exclude these embodiments from the claim. *See Accent Packaging, Inc. v. Leggett & Platt, Inc*., 707 F.3d 1318, 1326 (Fed. Cir. 2013) ("[A] claim interpretation that excludes a preferred embodiment from the scope of the claim is rarely, if ever, correct."); *see also, 3M Innovative Props.*, 350 F.3d at 1372 (rejecting a proposed claim construction where the specification disclosed embodiments not consistent with the proposal).

4. The Prosecution History

Qualcomm contends that ParkerVision's construction of matched filtering/correlating module overrules the Patent Office's requirement to break up the alleged inventions into three groups: Group I, "time integration"; Group 2, "RC processing"; and Group 3, "matched filtering/correlating." (Doc. 324, p. 20). ParkerVision submits the PTO's requirement that claims reciting specific details of Figures 151 and 153 be prosecuted separately does not change the fact that the '177 patent expressly states that Figures 149, 151, and 153 each perform matched filtering/correlating operations. The Court agrees with ParkerVision.

Prosecution history, to the extend it affects claim construction, normally concerns statements made by the applicant or the applicant's representative. Moreover, the prosecution history often represents an ongoing negotiation between the PTO and the applicant as opposed to the final product. *Phillips v. AWH Corp.*, 415 F.3d 1303, 1317 (Fed. Cir. 2005). This concept is demonstrated by the inventor's Reply to Restriction

Requirement wherein the inventor states, the "[a]pplicants hereby provisionally elect to prosecute the invention of Group I, represented by claims 13-24 and 49-74. This election is made without prejudice to or disclaimer of the other claims or inventions disclosed." (Doc. 324-10). ParkerVision did not limit the claims of the '177 patent, or even the '845 patent, through their conditional election to proceed with prosecution under Group I.

At times, however, the Examiner makes statements which may affect claim construction. For example, in *Ancora Technologies, Inc. v. Apple, Inc.*, 744 F.3d 732 (Fed. Cir. 2014), the Examiner discussed the teachings of prior art, and the Court held the statement was not that of the applicant and was, thus, insufficient to limit the claim. The Examiner also rejected claims as indefinite because the specification's reference to a hard disk as volatile memory conflicted with the Examiner's understanding of that term. *Id.* at 738. In response, the applicant limited claims specifically to non-volatile memory and failed to dispute the Examiner's understanding of that term. *Id.* The Court explained that the applicant's actions did not amount to a disavowal of the terms "volatile" and "non-volatile" memory from their ordinary understanding to a person of ordinary skill in the art. *Id.*

Here, the Examiner's statements in the Elections/Restrictions statement are not adopted by the applicant and do not constitute a disavowal of ParkerVision's construction of matched filtering/correlating module. The Examiner observed the following:

> The inventions are distinct, each from the other because of the following reasons:
>
> Invention I refers to time integrating a portion of a carrier signal and accumulating the signal to produce a downconverted signal, or time integrating an input signal to produce a downconverted signal. Invention II refers to RC processing (filtering) a portion of a carrier signal to produce a downconverted signal. Invention III refers to match

> filtering/correlating an input signal in response to control signals to produce a downconverted signal.

(Doc. 324-10, p. 9). The Examiner does not provide any detailed reasoning or analysis for his conclusion that "all these inventions . . . are independent or distinct", and the applicant did not disavow its position that RC processing and time integration are embodiments of matched filtering/correlating module. Accordingly, the Court declines to accept Qualcomm's argument that ParkerVision's proffered construction would "overrule" the PTO.

5. The Structural Details

ParkerVision submits that its current post-*Williamson* construction includes a number of structural details which provide an accurate structural description of the '177 patent's matched filter/correlator embodiments. (Doc. 317, p. 21). Qualcomm characterizes the "structural terms" as introducing additional subjectivity and ambiguity into the claims. (Doc. 324, p. 21). Specifically, Qualcomm objects to the inclusion of terms of degree, such as "*substantially* linear"; "*significant* load"; "*substantial* available real power", and "*enhanced* signal-to-noise power ratio." (*Id*.) Qualcomm also objects to ParkerVision's insertion of an "*independent* control input" and "aliasing rate." (*Id.* at p. 22).

a. Substantially linear time-variant circuitry

The '177 patent teaches that "[e]mbodiments of the present invention can be modeled as linear, time-linear variant (LTV) device." (Doc. 26-11; 175:50–51). The patent does not use the term "substantially linear" nor does it explain how one might quantify that term. Accordingly, the Court sustains Qualcomm's objection to the term "substantially." *See Berkheimer v. HP Inc.*, 881 F.3d 1360, 1364 (Fed. Cir. 2018) (finding the term "minimal redundancy" indefinite); *Liberty Ammunition v. United States*, 835 F.3d

1388, 1396 (Fed. Cir. 2016) (holding "claims having terms of degree will fail for indefiniteness unless they 'provide objective boundaries for those of skill in the art' when read in light of the specification and prosecution history"). Nothing in the '177 patent provides some standard for measuring "substantially" as used in ParkerVision's claim construction. *See Datamize v. Plumtree Software*, 417 F.3d 1342, 1351 (Fed. Cir. 2005) (the patent must provide a standard for measuring words of degree).

b. That samples a modulated RF (radio frequency) carrier signal at an aliasing rate

The patent teaches that "[c]ontrary to conventional wisdom, the present invention is a method and system for down-converting an electromagnetic (EM) signal by aliasing the EM signal. Aliasing is represented generally in FIG 45A as 4502. By taking a carrier and aliasing it at an aliasing rate, the invention can down-convert that carrier to lower frequencies." (Doc. 26-11; 26:23-28). This language appears in section 2.1 "Aspects of the Invention" and applies to the entire patent. Therefore, Qualcomm's objection to the inclusion of "aliasing rate" is overruled.

c. Using a switch with an independent control input driven by a control signal with a non-negligible, periodic aperture

Qualcomm objects to the requirement of an "independent" control input and the descriptive term "non-negligible." Qualcomm argues the patent teaches, at 63:33–37, that "[a]ny device with switching capabilities could be used to implement the switch modules," so it is error to include the word "independent." However, the portion of the patent quoted by Qualcomm is discussing how the FET in Figure 28A is an example of a control input. The question is whether other examples of control inputs are independent. ParkerVision argues, correctly, that Figures 27, 28A, 29G, and 44A all depict independent control

inputs. Therefore, ParkerVision's proposed construction of matched filtering/correlating module as "using a switch with an independent control input" is correct.

As discussed above, when a word of degree, such as "non-negligible," is used in a claim construction, the district court must determine whether the patent provides some standard for measuring that degree. *Datamize*, 417 F.3d at 1351. The '177 patent teaches that "[t]he length of the windowing function aperture . . . is an embodiment equal to an approximate half cycle of the carrier signal." (Doc. 26-11; 132:1–3). The patent also provides that "[s]witching module 15102 is controlled by a windowing function . . . . The length of the windowing function . . . is equal to an approximate half cycle of the received carrier signal." (*Id*., 133:29–34). One may also find similar standards for measuring "non-negligible" in 130:23–27 and 134:37–24. In this instance, the word of degree used by ParkerVision in its proposed construction is proper because the patent provides a standard for measuring that degree. Qualcomm's objection to "non-negligible" is overruled.

d. Such that the samples, having a non-negligible available energy

Qualcomm does not object to the use of "non-negligible" in this section of ParkerVision's proposed claim construction, and the term is sufficiently defined in the patent. (*Id.*, 130:23–27, 37–39).

e. Are accumulated and transferred to a significant load while the switch is closed and discharged through the load while the switch is open

Qualcomm objects to the inclusion of "significant" in Plaintiff's claim construction. The patent teaches that when the switch is closed, energy is accumulated in a storage device and ultimately reaches its maximum, and, at the same time, energy is transferred

and ultimately discharged. (Doc. 26-11; 147:35–42; 148:17–24). However, it does not provide a standard for measuring the degree of the load. Qualcomm's objection to inclusion of the word "significant" is sustained.

f. Thereby transferring substantial available real power from the modulated RF carrier signal to the load

The patent in "[e]quation 63.11 illustrates that optimum energy transfer occurs when x=0.841 [and teaches that] . . . one skilled in the relevant art(s) will realize that values other that 0.841 can be utilized." (*Id*., 148:25–33). The patent provides a number of equations illustrating when maximum power transfer occurs. (*Id.*, 14834-149:19). To the extent that Plaintiff contends the equations describing the effect that circuit and aperture timing values have on the power transferred to the load supplies a standard against with "substantial" may be measured, (Doc. 317, p. 27), the linkage between the equations and the word "substantial" is unclear to the Court.[13] Accordingly, Qualcomm's objection to the word "substantial" is sustained.

g. And producing a downconverted signal with enhanced signal-to-noise power ratio

Qualcomm objects to the inclusion of "enhanced." However, the patent provides a standard for measuring "enhanced":

> In accordance with embodiments of the invention, the matched filtering/correlating process can be performed at a sub-harmonic or fundamental rate.
>
> Operating on an electromagnetic signal with a matched filtering/correlating process or processor produces enhanced

[13] One of the many challenges inherent in claim construction is the lack of expertise by many if not most district judges in the subject matter of the invention. Here, a high-level appreciation of mathematics is needed to independently evaluate the equations to determine whether they provide the requisite standard for measuring the word "substantial." ParkerVision may be correct that the equations provide ample guidance for one skilled in the art. If so, that fact is lost on the Court.

> (and in some cases the best possible) signal-to-noise ratio (SNR) for the processed waveform.

(Doc. 26-11; 130:31–37). One skilled in the art will appreciate the meaning of enhanced as that term is used in the patent. Qualcomm's objection is overruled.

Accordingly, the Court adopts the following construction:

Court's Construction: Matched filtering/correlating module
linear time-variant circuitry that samples a modulated RF (radio frequency) carrier signal at an aliasing rate using a switch with an independent control input driven by a control signal with a non-negligible, periodic aperture, such that the samples, having non-negligible available energy, are accumulated and transferred to a load while the switch is closed and discharged through the load while the switch is open, thereby transferring available real power from the modulated RF carrier signal to the load and producing a downconverted signal with enhanced signal-to-noise power ratio.

B. switch/switch module

Claim Term	**Plaintiff's Construction**	**Defendant's Construction**
switch/switch module	"a device with an input and output that can take two states, open and closed, as directed by an independent control input"	"device with an input and output that can take two states, open and closed"
'940 Patent: Claims 24, 331		

U.S. Patent No. 6,091,940 ('940), titled "'Method and System for Frequency Up-Conversion,' is directed to '[a] method and system . . . wherein a signal with a lower frequency is up-converted to a higher frequency' . . . According to the '940 patent, '[t]he up-conversion is accomplished by controlling a switch with an oscillating signal, the frequency of the oscillating signal being selected as a sub-harmonic of the desired output

frequency.'" (Doc. 317-9, p. 4). Qualcomm requested an Inter Partes Review and challenged certain claims of the '940 Patent. (*Id.* at p. 2).

ParkerVision contends that in its final written decisions, the Patent Trial and Appeal Board ("**PTAB**" or "**the Board**") construed the terms "switch module" and "switch" to mean "device with an input and output that can take two states, open and closed." (Doc. 324, p. 2; 317-9, p. 7). The Board limited its construction to the term "switch module," stating that because "the term 'switch' is not recited without the modifier 'module' in any of the challenged claims. We, thus, decline to construe 'switch' by itself." (Doc. 317-5, p. 8 n.8). It now appears the parties want this Court to construe "switch/switch module." ParkerVision did not appeal the Board's construction of "switch module" to the Federal Circuit. *ParkerVision v. Qualcomm*, 903 F.3d 1354, 1358 (Fed. Cir. 2018). Qualcomm notes that ParkerVison "even endorsed the Board's construction [of switch module] . . . as noted in the Board's final decision." (Doc. 324-9, p. 7).

ParkerVision now proposes a construction of "switch/switch module" that differs from the PTAB's construction of "switch module," which Qualcomm has adopted, by including the words "as dictated by an *independent* control input." The issue, as ParkerVision framed it in the second *Markman* hearing, is whether to deviate from the Board's construction and add the limitation "independent" control input to the construction. (Doc. 334; 4:19–25). ParkerVision urges the Court to provide "the complete and correct construction of the 'switch/switch module,' not its broadest reasonable interpretation." (Doc. 317, p. 5).

1. Broadest Reasonable Interpretation compared with Phillips Standard

The PTO's construction standard is long-standing, both for original examination and during post-grant proceedings. The most common articulation is that "claims under examination before the PTO are given their broadest reasonable interpretation consistent with the specification." 37 C.F.R. § 42.100(b); *In re Cuozzo Speed Techs., LLC*, 793 F.3d 1268, 1275–79 (Fed. Cir. 2015), *aff'd sub nom. Cuozzo Speed Techs., LLC v. Lee*, 136 S. Ct. 2131 (2016). Under the rule of broadest reasonable interpretation, claim terms are given their ordinary and customary meaning, as would be understood by one of ordinary skill in the art in the context of the entire disclosure. *See In re Translogic Tech., Inc*., 504 F.3d 1249, 1257 (Fed. Cir. 2007). Although it is improper to read a limitation from the specification into the claims, *In re Van Geuns*, 988 F.2d 1181, 1184 (Fed. Cir. 1993), the claims still must be read in view of the specification of which they are a part. *See Microsoft Corp. v. Multi-Tech Sys., Inc.*, 357 F.3d 1340, 1347 (Fed. Cir. 2004). As discussed in the Board's IPR decision, "if a feature is not necessary to give meaning to what the inventor means by a claim term, it would be 'extraneous' and should not be read into the claim. *Hoganas AB v. Dresser Indus., Inc*., 9 F.3d 948, 950 (Fed. Cir. 1993); *E.I. du Pont de Nemours & Co. v. Phillips Petroleum Co*., 849 F.2d 1430, 1433 (Fed. Cir. 1988)." (Doc. 317-5, p.7).

Under *Phillips*, claim terms are given "the meaning that [a] term would have to a person of ordinary skill in the art in question at the time of the invention." 415 F.3d at 1313. This determination is based on the entire record before the court, taking into consideration both intrinsic evidence (the claims, specification and prosecution history) as well as extrinsic evidence (dictionary definitions and expert testimony). The Federal

Circuit has often recognized that, as a result, the patent system has two claim construction standards: (1) the BRI standard applied by the PTO in office proceedings; and (2) the *Phillips* standard used by district courts in actions involving validity and infringement. *Id*. Ultimately, the broadest reasonable interpretation, as used by the PTO, "may be the same as or broader than the construction of a term under the *Phillips* standard. But it cannot be narrower." *Facebook, Inc. v. Pragmatus AV, LLC*, 582 F. App'x 864, 869 (Fed. Cir. 2014).[14]

a. Prosecution History: Disclaimer

Qualcomm argues that ParkerVision's position during the IPR trial that the Board should maintain its construction of "switch module" constitutes a prosecution disclaimer, precluding Plaintiff from advancing their proffered construction. Whether an applicant's statements before the PTO can constitute disclaimer was addressed in *Aylas Network v. Apple*, 856 F.3d 1353, 1359–60 (Fed. Cir. 2017). The Court observed:

> [F]or prosecution disclaimer to attach, our precedent requires that the alleged disavowing actions or statements made during prosecution be both clear and unmistakable." *Id.* at 1325–26. "Thus, when the patentee unequivocally and unambiguously disavows a certain meaning to obtain a patent, the doctrine of prosecution history disclaimer narrows the meaning of the claim consistent with the scope of the claim surrendered." *Biogen Idec, Inc. v. GlaxoSmithKline LLC*, 713 F.3d 1090, 1095 (Fed. Cir. 2013).

Id. The Court discussed the evolution of the disclaimer doctrine. Initially, "when a patentee, on the rejection of his application, inserts in his specification, in consequence, limitations and restrictions for the purpose of obtaining his patent, he cannot . . . [thereafter advocate a construction absent such limitations]." *Id*. It was later applied to post-issuance

[14] The PTAB now applies the *Phillips* standard, but this was not so when they construed "switch module."

proceedings; for example, when a patentee applies to the examiner to reissue the patent and statement made during reexamination proceedings. *Id*. Therefore, the Court reasoned:

> Because an IPR proceeding involves reexamination of an earlier administrative grant of a patent, it follows that statements made by a patent owner during an IPR proceeding can be considered during claim construction and relied upon to support a finding of prosecution disclaimer. *See Krippelz*, 667 F.3d at 1266. Of course, to invoke the doctrine of prosecution disclaimer, any such statements must "be both clear and unmistakable." *Omega Eng'g*, 334 F.3d at 1326.

Id. at 1361.

b. ParkerVision's Argument

ParkerVision submits that the issues litigated in the IPR were different from the issues being litigated in the instant case. (Doc. 334; 14:4–6). The IPR involved whether four pieces of prior art rendered certain claim of the '940 patent unpatentable due to obviousness. (Doc. 317-5, p. 3–4). ParkerVision contends for purposes of the IPR there was no reason for them to take issue with the Board's construction of "switch module." (Doc. 334; 14:12–18). Therefore, ParkerVision's failure to contest the Board's construction is not tantamount to a disavowing action or statement which clearly and unmistakably limits the patent. Disclaimer should not be found lightly, and Qualcomm has failed to articulate how ParkerVision's position before the Board constitutes a disclaimer.

c. No prosecution disclaimer occurred

As the Court observed during the second *Markman* hearing, it is not uncommon for lawyers to narrow the battles they are to fight before the Board, particularly where, as here, the issues before the Board are not the same as those presented by the district court litigation. The Court agrees with ParkerVision that it did not disclaim or limit its patent

by failing to object to the Board's construction of "switch module." ParkerVision was concerned with the narrow issue of whether prior art rendered certain claims unpatentable. They had neither the need, nor the motivation, to challenge the Board's construction.

2. Construction of Switch/Switch Module: First Markman Hearing

Qualcomm concedes that Claim 22 explicitly requires that there be a control input. (Doc. 334; 19:1–2). "[T]he question is whether that control input has to be independent." (*Id*. at 19:3–4). In its initial claim construction brief, Qualcomm pointed to Figure 28A of the '940 patent to illustrate that the switch module has four terminals: "(1) the control input, (2) first input, (3) second input, and (4) output." (Doc. 171, p. 11).[15] Qualcomm's brief further noted that "[t]he 'switch'/'gating' modules are the heart of ParkerVision's transmitter patents" and that "the oscillating signal (5306) passes through a pulse shaper (5310) whose output controls the switch (5312)." (*Id.* at p. 10).

ParkerVision argued that "[i]n Claim 1, the oscillating signal is the control signal, which is responsible for the opening and closing of the switch, the bias signal is an information-bearing input signal, and the control or gating action of the switch/switch module yields a periodic signal with a plurality of harmonics." (Doc. 148, p. 14).

Claim 1 of the '940 patent provides:

> 1. An apparatus for communicating, comprising:
>
> a first switch module that receives a first oscillating signal and a first bias signal, wherein said first oscillating signal causes said first switch module to gate said first bias signal and thereby generate a first periodic signal having a first plurality

[15] Qualcomm argued for a construction that included "equal value" as a limitation, but this was rejected by the Board at the IPR. The Defendant has abandoned this limitation.

> of harmonics, said first periodic signal having an amplitude that is a function of said first bias signal

Figures 28A, 29A, 30A, 31A, 32A, and 33A all teach that an oscillating signal causes the first switch module to gate said first bias signal. *See* Figure 28A below as an illustration:

FIG. 28A

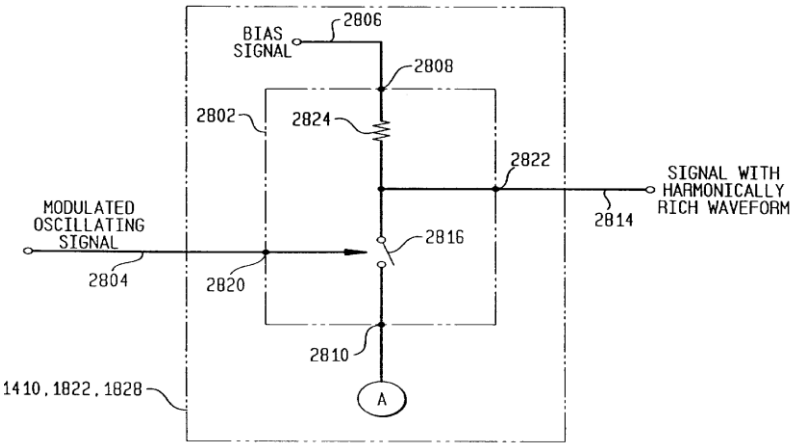

3. Second Markman Hearing

At the second *Markman* hearing, Qualcomm asserted that nothing in the patent describes the control input as an independent control input. (Doc. 334; 21:11–15). Qualcomm contends the patent specifically recognizes that the switch is *typically* caused to be controlled by an electrical or electronic input; therefore, the patent should not be construed to require an independent control input, citing the '940 patent at 7:54-60:

> Control a switch: Causing a switch to open and close. The switch may be, without limitation, mechanical, electrical, electronic, optical, etc., or any combination thereof. Typically, it is controlled by an electrical or electronic input. If the switch is controlled by an electronic signal, it is typically a different signal than the signals connected to either terminal of the switch.

(Doc. 26-1). ParkerVision highlights the same language for the premise that the patentee is acting as their own lexicographer by providing a definition of what they mean by

controlling a switch. (Doc. 334; 6:15-17). ParkerVision submits that the control signal is independent from the input or the output of the switch, as provided, for example, in Claim 22:[16]

> **22.** An apparatus for communicating comprising:
>
> (a) a transmitting subsystem comprising:
>
> (1) a switch module having a first input connected to a bias signal, a control input connected to a control signal, and an output generating a periodic signal, wherein said control signal is an oscillating signal, said control signal causing said switch module to gate said bias signal, said periodic signal having an amplitude that is a function of said bias signal, and said periodic signal being a harmonically rich signal comprised of a plurality of harmonics, and
>
> (2) a filter to accept said harmonically rich signal and to output one or more desired harmonics from said plurality of harmonics; and
>
> (b) a receiving subsystem. (emphasis added)

As further support for the premise that the control input is independent, ParkerVison looks to the '940 patent at 41:44–49 which discusses the amplitude of the signal:

> Another factor in assuring that the desired harmonic has sufficient amplitude is how the switch **2816** and **3116** (FIGS. **28A** and **31A)** in the switch module **2802** and **3102** responds to the control signal that causes the switch to close and to open (i.e., the modulated oscillating signal **2804** of FIG. **28** and the oscillating signal **3104** of FIG. **31).**

(Doc. 334; 8:20–9:7; Doc. 26-1) (emphasis added).

Similarly, the patent teaches with respect to Figure 28A that "[w]hen the modulated oscillating signal **2804** causes the switch **2816** to become "closed," the output **2822** of the

[16] Claim 24 depends on Claim 22 and Claim 331 depends on Claim 24.

switch module **2802** becomes connected electrically to the second input **2810** of the switch module **2802** . . . ." (Doc. 26-1; 33:65–34:7) (emphasis added). ParkerVision contends that every disclosed embodiment of the patent has a switch with an independent control input. (Doc. 334; 9:20–22).

At the first *Markman* hearing Qualcomm agreed with the construction argued that "fundamentally the input and the output of the switch and switch module have to have substantially equal voltage." (Doc. 211, p. 5–7). While advancing this proffered construction, Qualcomm discussed Figure 28A, and observed "[t]he switch is controlled by the modulated oscillating signal. That's the control input terminal we have here at 2820." (*Id*. at 76:5; 76:25–77:2). Thus, at the first *Markman* hearing, Qualcomm agreed with the construction of "switch/switch module" now advanced by ParkerVision. Qualcomm's current argument is largely limited to their reference to the '940 patent at 7:54–60, where the patent provides that "typically" a switch is controlled by an electronic or electrical input. The Court agrees with ParkerVision, however, that the embodiments and teachings of the patent as a whole support Plaintiff's construction of "switch/switching module."

Accordingly, the Court adopts the following construction:

Court's Construction: Switch/Switch Module
"device with an input and output that can take two states, open and closed, as dictated by an independent control input"

C. to gate/gating

Claim Term	**Plaintiff's Construction**	**Defendant's Construction**
"to gate"/ "gating"	"to change/changing between the open and	"to change/changing between (i) connecting a

	closed states of a device that can take two states, open and closed, as dictated by an independent control input"	signal at an input to an output such that the input and output have a substantially equal voltage, and (ii) disconnecting the signal from the output"
"gating means"	Function: gating Structure: Figures 31A and 32A, 2:24-45, and equivalents thereof[17]	Function: gating Structure: a device with an input and an output that can take two states, open and closed, and when closed electronically connects its input and output such that the input and output have an equal voltage as shown and described in '372 Patent at Figures 28A, 29A, 30A, 31A, 32A, 33A, 53A, 54A, 55, 56, 57A-C, 66, 67, 68, 69, 70
"to gate/gating" '940 Patent: Claims 24, 25, 26, 331, 364, 365, 366, 368, 369, 373 '372 Patent: Claims 95, 96, 99, 100, 103, 104, 107, 108, 109, 110, 126, 127 "gating means" '372 Patent: Claims 88, 95, 99, and 103		

The parties agree that the "gating means" term is a means-plus-function clause governed by 35 U.S.C. § 112(6). (Doc. 148, p. 16). They disagree, however, on the structure for the "gating means." (*Id.*). The parties agree the function associated with the claim language is "gating." The disagree over the construction of that term. Thus, the

[17] In their initial Claim Construction Brief, ParkerVision proposes that the structure be "Figures 28A, 29A, 30A, 31A, 32A, 33A, 53A, 54A, 55, 56, 57A-C, 66, 67, 68, 69, 70, '372:2:24-25, and equivalents thereof." (Doc. 148, p. 12 n.6).

Court will first construe "to gate/gating" and then the corresponding structure "gating means."

1. "to gate/gating"

ParkerVision contends that Qualcomm's proposed construction differs from theirs in two regards: First, Qualcomm omits the concept of a control input; Second, Qualcomm's construction requires "connecting a signal at an input to an output such that the *input and output have an equal voltage*." (Doc. 317, p. 8). ParkerVision correctly notes that the PTAB rejected the equal-voltage limitation in both "switch module" and "to gate." (*Id.*).[18] The PTAB also rejected ParkerVision's original construction of "to gate/gating" to the extent that it included "a plurality of harmonics" in the construction. (Doc. 317-5, p. 12). ParkerVision has abandoned this language from its proposed claim construction.

a. Control Input

The term control input was discussed at length in the Court's construction of "switch/switch module." Claim 24 of the '940 patent depends on Claim 22 and, as discussed above, Claim 22 teaches an independent control input: "said control signal causing said switch module to gate said bias signal." Claim 95 of the '372 patent teaches the following:

---

[18] With regard to "switch module," the Board held "we do not agree that the broadest reasonable interpretation in light of the specification (or the plain and ordinary meaning) of switch or switch module is limited to a device where the input and output have an *equal* voltage when closed." (Doc. 317-5, p. 10). The Board declined to construe "gating" and observed: "Petitioner's proposed construction improperly incorporates the language from its proposed meaning of 'switch' and 'switch module' (i.e., 'such that the input and output have an equal voltage'), language we rejected in construing 'switch module.'" (*Id*. at p. 12).

> ***95.*** A system for up-converting and modulating a first information signal and a second information signal, comprising:
>
> a multiplier accepting the first information signal and the second information signal and creating a combined signal;
>
> an inversion means for inverting said combined signal and outputting an inverted combined signal;
>
> a first control signal having a first control frequency and a first control phase;
>
> a second control signal having a second control frequency and a second control phase, wherein said second control frequency is substantially equal to said first control frequency and said second control phase is substantially 180° out of phase with said first control phase;
>
> a first gating means for gating having a first control input;
>
> said first control signal being coupled to said first control input, **said first control signal causing said first gating means to gate** said combined signal at a rate that is a function of said first control frequency, thereby resulting in a gated combined signal;
>
> …

(Doc. 26-6) [emphasis added].

Based upon the teaching of Claim 22 of the '940 patent and Claim 95 of the '372 patent, and for the reasons discussed in the construction of "switch/switch module," the Court finds "to gate/gating" should be construed to require "as dictated by an independent control input."

b. Substantially equal voltage

In Qualcomm's initial Claim Construction Brief, they proposed the following construction of "to gate/gating":

> to change/changing between (i) connecting a signal at an input to an output such that the input and output have an

> **equal voltage**, and (ii) disconnecting the signal from the output.

(Doc. 171, p. 9) [emphasis added].

The Defendant's new proposed construction, presumably in response to the Board's finding, adds the qualifier "substantially" before "equal voltage." (Doc. 324, p. 8). At the second *Markman* hearing, counsel for ParkerVision posed the following question: "should we read in a limitation that the input and the output of the switch have substantially equal voltage? And if so, what are the bounds on substantially equal?" (Doc. 334; 28:13-16).

ParkerVision concedes that one may use terms of degree such as substantially. (*Id.*, 28:17). If "to gate/gating" is construed to include "substantially equal voltage," the patent must provide sufficient limitations in the claims and support in the specifications to allow one skilled in the art to reasonably determine what "substantially equal voltage" means. *See Exmark Mfg. Co., Inc. v. Briggs & Stratton Power Prods. Grp., LLC*, 879 F.3d 1332, 1345 (Fed. Cir. 2018) (claim not indefinite where "substantially straight baffle portion" is explained in the claim and specification). The analysis does not end here, because a court should "avoid the danger of reading limitations from the specification into the claim" and should avoid "confining the claims to those embodiments." *Phillips*, 415 F.3d at 1323. Moreover, a claim construction "which excludes a disclosed embodiment from the scope of the claim is rarely, if ever, correct." *Broadcom Corp. v. Emulex Corp.*, 732 F.3d 1325, 1333 (Fed. Cir. 2013).

The '940 patent teaches that "[t]he switch may be, without limitation, mechanical, electrical, electronic, optical, etc. or any combination thereof." (Doc. 26-1; 7:54–60). In

support of their proposed construction, Qualcomm highlights one embodiment of a switch module in the '940 patent:

> When the modulated oscillating signal **2804** causes the Switch **2816** to become "closed," the output **2822** of Switch module **2802** becomes connected electrically to the second input **2810** of switch module **2802** (e.g., ground **2812** in one embodiment of the invention) and the amplitude of the harmonically rich Signal **2814 becomes equal** to the potential present at the second input **2810**.

(Doc. 26-1; 33:59–34:7) (emphasis added).[19]

ParkerVision submits the limitation in this embodiment should not be read into the claim. For example, the '940 patent provides that "[o]ne skilled in the relevant art(s) will recognize that any one of a number of switch designs will fulfill the scope and spirit of the present invention as described herein." (*Id.*, 34:17–20).

ParkerVision argues that other embodiments do not mention equal or substantially equal voltage. (Doc. 317, p. 11; Doc. 334; 32:11–34:1). The '940 patent, 34:21–45, supports ParkerVision's argument:

> In an embodiment of the invention, the switch **2816**[20] is a semiconductor device, such as a diode ring. In another embodiment, the switch is a transistor, such as a field effect transistor (FET). In an embodiment wherein the FET is gallium arsenide (GaAs), switch module **2802** can be designed as seen in FIGS. 29A-29C, where the modulated oscillating signal **2804** is connected to the gate **2902** of the GaAsFET **2901**, the bias signal **2806** is connected through a bias resistor **2824** to the source **2904** of the GaAsFET **2901**, and electrical ground **2812** is connected to the drain **2906** of GaAsFET 2901. (In an alternate embodiment shown in FIG. 29C, a second signal **2818** may be connected to the drain **2906** of GaAsFET **2901**.) Since the drain and the source of

---

19 The patent also teaches that "[w]hen the switch **2816** is "open," the output **2822** of the switch module **2820** is at substantially the same voltage level as bias signal **2806**." (Doc. 26-1; 33:59–61).

20 See FIG. 28A.

> GaAsFETs are interchangeable, the bias signal **2806** can be applied to either the source **2904** or to the drain **2906**. If there is concern that there might be some source-drain asymmetry in the GaAsFET, the switch module can be designed as shown in FIGS. 30A-30C, wherein two GaAs- FETs **3002** and **3004** are connected together, with the source **3010** of the first **3002** connected to the drain **3012** of the second **3004**, and the drain **3006** of the first **3002** being connected to the source **3008** of the second **3004.** This design arrangement will balance substantially all asymmetries. Other switch designs and implementations will be apparent to persons skilled in the relevant art(s).

Switch 2816 in this alternate embodiment lacks the limitation of equal or substantially equal voltage.

The claim and specifications provide one of ordinary skill in the art with information to appreciate "substantially equal voltage," but Qualcomm's proposed construction invites the Court to exclude a disclosed embodiment. Accordingly, the Court agrees with the PTAB that Qualcomm's proposed construction includes an unnecessary limitation.

Accordingly, the Court adopts the following construction:

Court's Construction: "to gate/gating"
"to change/changing between the open and closed states of a device that can take two states, open and closed, as dictated by an independent control input"

2. "gating means"

At the first *Markman* hearing, ParkerVision identified the following disagreements with Qualcomm's proposed construction. First, Qualcomm's construction describes a device with an input and an out and ignores the "control." (Doc. 211; 57:9–11). Secondly, Qualcomm construes the input and output as being equal. (*Id*., 58:10–13). The Court has previously discussed in this Order the control input present in the invention and the effect

a FET has on the notion of "equal voltage." These issues were addressed at the first *Markman* hearing, and Qualcomm conceded that their construction could be "tweaked" to say "substantially equal voltage." (Doc. 211; 74:6–10). [21] Qualcomm identified the "fundamental point, which is the voltage on either side of that switch has to be substantially equal." (*Id*., 81:25–82:2; 82:11–14). The limitation proposed by Qualcomm of the input and output having equal voltage is not supported by the claims or the specifications.

ParkerVision suggests the structure of "gating means" is found in Figures 31A and 32A, along with Col. 2:24-45 of the '372 patent. Qualcomm desires a construction that includes "a device with an input and an output that can take two states, open and closed, and when closed electrically connects its input and output . . . ." The Court finds the Claims and specifications convey the meaning of "gating means" such that additional construction is not warranted. *O2 Micro Int'l*, 521 F.3d at 1360. A person of ordinary skill in the art(s) can look to Claims 88, 95, 99, and 103, Figures 28A, 29A, 30A, 31A, 32A, 33A, 53A, 54A, 55, 56, 57A-C, 66, 67, 68, 69, 70, and '372::23:16-28, 2:24-45 to understand the meaning of "gating means." The parties, however, have not advocated for the ordinary meaning of this term.

Accordingly, the Court adopts the following construction:

Court's Construction: "gating means"
Structure: Figures 28A, 29A, 30A, 31A, 32A, 33A, 53A, 54A, 55, 56, 57A-C, 66-70

[21] The '372 patent teaches in claims 88, 95, 99, and 103 the voltage is "substantially equal."

D. "summer"

Claim Term	Plaintiff's Construction	Defendant's Construction
"summer"	plain and ordinary meaning, or alternatively, "circuitry that sums two or more signals"	"a device that sums two or more signals"
'372 patent: claims 95, 99, 103		

Two issues are presented by this claim term. First, whether the plain and ordinary meaning of "summer" is sufficient, and, second, whether "summer" is limited to a discrete device and excludes circuitry. The '372 patent in Claim 95 defines what a summer does:

> a summer accepting said gated combined signal and said gated inverted combined signal creating a phase-and-amplitude-modulated harmonically rich [signal] having a plurality of harmonics, at lease one of said plurality of harmonics being a desired harmonic.

Therefore, a summer takes two signals, sums them, and puts that as a single output. (Doc. 334, 56:15–16). ParkerVision contends that "summer" has an ordinary meaning to persons of ordinary skill in the art and does not require construction. (*Id.*, 56:19–21). ParkerVision further argues the patent specification supports its construction; for example, the specification states "[t]he invention supports numerous embodiments of the summer." (Doc. 26-6, 46:42–50). The '372 patent teaches the following structural description of a summer:

> The design and use of a summer **3402** is well known to those skilled in the relevant art(s). A summer **3402** ***may*** be designed and fabricated from discrete components, or it ***may*** be purchased "off the shelf." A summer **3402** accepts a harmonically rich "I" signal **3404** and a harmonically rich "Q" signal **3406**, and combines them to create a harmonically rich "I/Q" signal **3408**. In a preferred embodiment of the invention, the harmonically rich "I" signal **3404** and the harmonically rich

> "Q" signal **3406** are both phase modulated. When the harmonically rich "I" signal **3404** and the harmonically rich "Q" signal **3406** are both phase modulated, the harmonically rich "I/Q" signal **3408** is also phase modulated.

(*Id.*, 47:19–32) (emphasis added).

ParkerVision asserts the patent is "agnostic" as to the type of signals (voltage, current, energy). Because Qualcomm cannot identify any definition or disclaimer that supports a departure from the ordinary meaning, ParkerVision submits the term should be given its plain and ordinary meaning. *See Unwired Planet v. Apple, Inc.*, 829 F.3d 1353, 1358 (Fed. Cir. 2016) (ordinary meaning applies absent (1) an express definition or (2) a clear and unmistakable disclaimer); *see also Hill-Rom Servs.*, 755 F.3d at 1371. Moreover, ParkerVision contends Qualcomm's construction "seeks to limit the claims without even providing any context or explanation of what their 'device' limitation means or requires." (Doc. 317, p. 12).

Qualcomm counters that the '372 patent describes a transmitter that uses voltage and not current:[22]

> Some potential limitation of this embodiment are: the amplified bias/reference signal may exceed the **voltage** design limit for the switch in the switch circuit; the harmonically rich signal coming out of the switch circuit may have an amplitude that exceeds the voltage design limits of the filter, and/or unwanted distortion may occur from having to amplify a wide bandwidth signal.

(Doc. 26-6; 58:2–8) (emphasis added).

---

[22] Qualcomm defines "current mode" as "a signal transmitted through the device using variations in current, and "voltage mode" as "a signal transmitted through the device using variations in voltage." (Doc. 324, p. 10 n.4).

This, of course, is only one embodiment of the invention. And the patent teaches that "[t]he embodiments described above are provided for purposes of illustration. These embodiments are not intended to limit the invention." (*Id.*, 58:33–35).

1. Second Markman Hearing

At the second *Markman* hearing the Court asked counsel for Qualcomm whether the harmonically rich "I" and "Q" signals can be summed without a separate device, and counsel conceded that current can be combined without a device. (Doc. 334, 67:9–18). Counsel qualified her answer by further noting that the patent is a voltage mode patent. (*Id*.). Qualcomm's counsel observed that none of the figures depict current; there is no description of current mode in the patent, and the patent teaches the summer "may be designed and fabricated from discrete components, or it may be purchased 'off the shelf'"; hence, it is a device. (*Id.*, 65:16–18; 66:13–23). Qualcomm argued the patent is a voltage mode patent, and voltage cannot be combined without a device. (*Id.*, 67:15–18).[23]

a. Federal Circuit Opinion in ParkerVision I

Qualcomm argued that their theory that the '372 patent is a "voltage mode" patent is supported by the Federal Circuit's opinion in *ParkerVision I*. (Doc. 334, 69:5–13). The issued before the Federal Circuit was narrow. The asserted claims of the patents in *ParkerVision I* "require[d] that the accused products produce a low-frequency baseband signal using energy that has been transferred from a high-frequency carrier signal into a storage medium, such as a capacitor or set of capacitors." 621 Fed. App'x. 1009 at 1013. ParkerVision's expert, Dr. Prucnal, testified that the accused products satisfy the

[23] The parties agree voltage cannot be summed unless there is a device–a summer, and current can sum without a device. That is, the summer can be circuitry such as a circuit node. Thus, current out of a node equals the sum of the input currents.

generating limitation by using a "double-balanced mixer." *Id*. Dr. Prucnal testified, on cross-examination, "that the baseband signal in the accused products has already been created before the signal reaches the identified capacitors." *Id.* Since the double-balanced mixer creates the signal before it reaches the capacitor, the accused products did not infringe. *Id.* at 1014.

During the hearing on Qualcomm's post-trial motion for judgment as a matter of law, ParkerVision attempted to rectify Dr. Prucnal's testimony through the testimony of Dr. Razavi—ParkerVision's invalidity expert. *Id.* at 1015. Dr. Razavi referred to one prior art reference to support his theory on why the accused products still infringed. *Id.* The Federal Circuit, in analyzing the prior art, noted:

> In the prior art reference that Dr. Razavi was discussing, the baseband signal is represented by voltage across the capacitor. As Dr. Razavi testified, voltage is the same at all points along an electric wire [in the prior art reference].

Id.

Contrary to Qualcomm's assertion at the second *Markman* hearing, this language from *ParkerVision I* does not support their contention that ParkerVision's patents are voltage mode patents. Rather, the prior art referenced by Dr. Razavi was found to be unconvincing because *it* pertained to voltage mode while Qualcomm's accused products are "current-mode" products. *Id.*[24]

b. ParkerVision's Arguments: Second Markman Hearing

ParkerVision argued that to limit the scope of the claims, one must find a clear, unambiguous disclaimer in the intrinsic record. (Doc. 334, 72:5–7). The phrase "voltage

---

[24] The Federal Circuit held: "Dr. Razavi's 'one and the same point' testimony, which was directed to a voltage signal, is thus inapplicable to current-mode devices such as Qualcomm's accused products." *Id.* at 1015–16.

mode" an does not appear in the patent, nor is there a statement equating summer with a device. (*Id.*, 72:8–15). As for the language in the '372 patent stating a summer may be designed and fabricated from components or purchased off the shelf, ParkerVision asserted the operative language is "may" be fabricated, and nodes and wires constitute components which sum current. (*Id.*, 72:21–73:13). Moreover, none of the figures are limited to summing voltage. (*Id.*, 74:7–11).

2. Construction of Summer

"When the parties raise an actual dispute regarding the proper scope of these claims, the court, not the jury, must resolve that dispute." *O2 Micro Int'l*, 521 F.3d at 1360. The court is not absolved of this duty to construe the actually disputed terms just because the specification of the patent defines the term. The Court agrees with ParkerVision that the claims, specifications, and figures do not limit "summer" to voltage. To the extent Qualcomm urges the Court to import a limitation into the '372 patent such that summer means a "device that sums two or more signals," with the implication that a device defines the '372 patent as a "voltage mode" patent, the Court declines to do so. It is abundantly clear, however, from the '372 patent that summer includes both a device to sum voltage signals and circuitry that sums current signals.[25]

Accordingly, the Court adopts the following construction:

Court's Construction: "summer"
"circuitry or a device that sums two or more signals"

[25] Neither party has advanced a construction that includes the words "voltage" or "current." Clearly, the term "summer" in the '372 patent includes both.

E. "summing means"

Claim Term	Plaintiff's Construction	Defendant's Construction
"summing means" ('372 patent)	Function: "summing an in-phase phase-modulated harmonically rich signal and a quadrature-phase phase-modulated harmonically rich signal" ('372 claim 99) Function: "summing an in-phase phase-and-amplitude-modulated harmonically rich signal and a quadrature-phase phase-and-amplitude-modulated harmonically rich signal" ('372 claim 103) Structure: Figs. 8E, 34; Section 3.3.8 and equivalents thereof	Function: "summing said in-phase phase-modulated harmonically rich signal and said quadrature-phase phase-modulated harmonically rich signal" ('372 claim 99) Function: "summing said in-phase phase-and-amplitude-modulated harmonically rich signal and said quadrature-phase phase-and-amplitude-modulated harmonically rich signal" ('372 claim 103) Structure: '372 patent Figs. 70 (summer 7085) and 71 (summer 7126)

The parties agree on the function of the "summing means" term, but they disagree about the proper structure. ParkerVision agrees with Qualcomm that Figures 70 and 71 constitute part of the structure. (Doc. 148, p. 29). However, ParkerVision contends the structure of all means-plus-function terms must include equivalents. (*Id*. at p. 30). ParkerVision argued at the first *Markman* hearing that 35 U.S.C. § 112(6) requires the inclusion of equivalents. (Doc. 211, 167:4–14).[26] The crux of the dispute is that Qualcomm seeks a construction of "summing means" which limits a summer to a device and limits the '372 patent to a voltage mode patent—hence Qualcomm's reliance on Figures 70 and

[26] 35 U.S.C. § 112(6) provides: An element in a claim for a combination may be expressed as a means or step for performing a specified function without the recital of structure, material, or acts in support thereof, and such claim shall be construed to cover the corresponding structure, material, or acts described in the specification and equivalents thereof.

71. ParkerVision desires a construction that includes equivalents and allows for current to be summed as discussed in the preceding section.

For the reasons set forth in the Court's construction of "summer," the Court finds the '372 patent is not limited to voltage and a summer is not only a device. Therefore, the structure of "summing means" should not be limited to Figures 70 and 71.

Accordingly, the Court adopts the functions agreed to by the parties, and adopts the following structure:

Court's Construction: "summing means"
Structure: '372 patent Figures 8E, 34, 70 (summer 7085), 71 (summer 7126); Section 3.3.8 and equivalents thereof.

F. "bias signal"

Claim Term	**Plaintiff's Construction**	**Defendant's Construction**
"bias signal" '940 patent: claims 24, 331	"(1) a signal having a steady predetermined level; or (2) the modulating baseband signal"	"(1) a signal having a steady, predetermined level or (2) the original baseband signal at the source"

The parties agree with the first definition of "bias signal" as "a signal having a steady predetermined level." The dispute arises over the alternate (second) construction; this is, whether "bias signal" is "the modulating baseband signal" or "the original baseband signal at the source." While neither party sought construction of this term prior to the IPR, the Board construed the term as follows: "(1) a signal having a steady, predetermined level or (2) the original baseband signal at the source." (Doc. 317-11, p. 12; Doc. 317-12,

p. 12). Qualcomm argues the prosecution disclaimer doctrine prevents ParkerVision from now seeking a different and more expansive construction. (Doc. 324, p. 5).

1. The Board's Construction

Qualcomm characterizes ParkerVision's position on "bias signal" before the Board as follows:

> What ParkerVision said to the Patent Office is that they were making this argument that the Dobrovolny prior art reference didn't disclose the bias signal, which is the issue that we're discussing today, so construing the concept of bias signal. And in making that argument, ParkerVision argued that you look to the definition of information signal, which is restricted to the original baseband signal at the source.
>
> This is why it's classic textbook example of prosecution history estoppel.

(Doc. 334, 91:1–9).

This is not entirely correct. The parties agree there is more than one type of "bias signal"; hence the need for two constructions. The first type is the steady signal. ('940 patent, FIG. 28A; Doc. 317-11, p. 9). The Second type is an information-bearing baseband signal. ('940 patent, FIG. 56; Doc. 317-11, p. 11). At the IPR, Qualcomm argued that the combination of Dobrovolny and Maas discloses all of the required limitations of the challenged claims, including the claimed "bias signal" and "plurality of harmonics." (Doc. 317-21, 1:15–18). ParkerVision distinguished Qualcomm's prior art reference, arguing that "Dobrovolny's high level RF input signal—indisputably does not fall within this meaning of bias signal, and Qualcomm does not assert otherwise. (*See, e.g.*, Petition at 29, 45). Instead, Qualcomm argues that the patentees defined 'bias signal' in the '940 patent as also including an 'information signal' . . . ." (Doc. 317-21, p. 26). Rather than concurring with Qualcomm's position that "bias signal" include an

"information signal," ParkerVision posits ***"even if*** Qualcomm were correct" that "bias signal" includes "information signal," the '940 patent teaches that an information signal is a baseband signal. (*Id*. at pp. 26–27) (emphasis added). In support of their argument that information signal is a baseband signal, ParkerVision cites the '940 patent, column 8, lines 48–54, which provides:

> **Information signal**: The signal that contains the information that is to be transmitted. As used herein, it refers to the original baseband signal at the source. When it is intended that the information signal modulate a carrier signal, it is also referred to as the "modulating baseband signal." It may be voice or date, or any other signal or combination thereof.

ParkerVision concludes by arguing that "[i]f the Board adopts Qualcomm's position and agrees to expand the meaning of bias signal to include 'information signal' as that term is used in the '940 patent, then the '940 patent's definition of 'information signal' as a 'baseband signal' must control." (Doc. 317-21, p. 28). Operating from the premise that the Board may adopt Qualcomm's position, ParkerVision requests the Board to construed "bias signal" to mean "(1) its ordinary meaning, *i.e*., a signal having a steady predetermined level, or (2) a baseband signal." (*Id.*). Rather than adopt this construction, the Board focuses upon a portion of the definition of information signal, and reaches the following and inexplicable conclusion:

> Thus, Patent Owner accepts that "bias signal" should be construed, beyond its plain and ordinary meaning, to include the original baseband signal at the source.

(Doc. 317-11, p. 10).

ParkerVision's proffered construction bears no resemblance to the Board's construction. This is not to suggest the Board misread the specification. It did not. The problem is the Board chose to ignore "modulating baseband signal" portion of the specification. Since

ParkerVision did not unequivocally and unambiguously disavow a certain meaning to obtain a patent, they are not bound by the construction of "bias signal" chosen by the Board, and neither is this Court. *Biogen Indec, Inc.*, 713 F.3d at 1095.

2. Construction of Bias Signal

In their claim construction brief and during the second *Markman* hearing, Qualcomm confined their analysis of "bias signal" to the Board's construction, focusing their argument on the alleged estoppel. Qualcomm does not take issue with ParkerVision's construction of "bias signal" as being incorrect, and the Court finds ParkerVision is correct that a "bias signal" is either a steady signal, or when it is intended that the information signal modulate a carrier signal, it is referred to as the "modulating baseband signal." (Doc. 21-1, 8:48–54).

Qualcomm's construction is incorrect in that limiting bias signal to "the original baseband signal at the source" ignores the fact the patent teaches an information signal can be processed before transmission. The '940 patent, referring to Figure 5, teaches:

> Amplitude modulation circuit **500** receives information signal **502** from a source (not shown). Information signal **502, 2202** can be amplified by an optional amplifier **504** and filtered by an optional filter **518.** Amplitude modulation circuit **500** also includes a local oscillator **(LO) 506** which has an **LO** output **508.** Information signal **502, 2202** and **LO** output **508** are then multiplied by a multiplier **510.**

(*Id.*, 12:14–20).

Similarly, Figure 56 shows the information signal **5650** at the point of modulation and not at the point where it was originally created:

FIG. 56

TRANSMITTER USING PRESENT INVENTION IN FULL DUPLEX COMMUNICATIONS CIRCUIT WITH UNIVERSAL FREQUENCY DOWN-CONVERTER

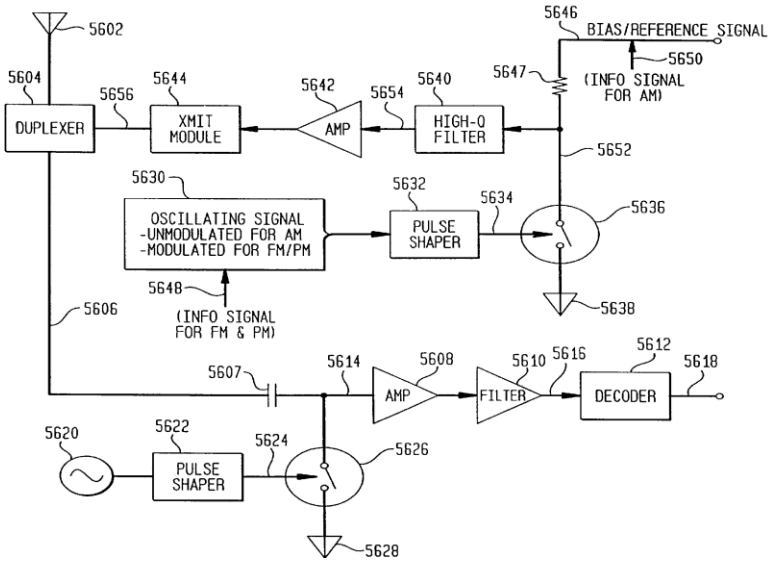

Moreover, the patent teaches the baseband signal "refers to both the information signal that is generated at a source prior to any transmission . . . and to the signal that is to be used by the recipient after transmission (also referred to as the demodulated baseband signal)." (*Id.*, 7:61–67; 8:41–47). Qualcomm's proffered construction limits the invention beyond that which the claims and specifications teach.

Accordingly, the Court adopts the following construction:

Court's Construction: "bias signal"
"(1) a signal having a steady, predetermined level; or (2) the modulating baseband signal"

G. "desired harmonics" and "desired signal"[27]

Claim Term	Plaintiff's Construction	Defendant's Construction
"desired harmonics" '940 and '372 patents	plain and ordinary meaning; or alternatively, "a plurality of harmonic frequencies that are desired"	"a plurality of harmonic frequencies that are desired to be transmitted and that have sufficient amplitude for accomplishing the desired processing"
"desired signal" '372 patent	plain and ordinary meaning; or alternatively, "a signal/ frequency selected for reception and/or transmission"	"a frequency that is desired to be transmitted and that has sufficient amplitude for accomplishing the desired processing"

ParkerVision advocates that "desired harmonics" and "desired signal" be given their plain and ordinary meaning and argues that Qualcomm's construction adds two limitations from the specifications that are not required by the claim. (Doc. 211, 132:3–18; 135:18–24; 139:5–7). That is, ParkerVision contends that "to be transmitted" and "sufficient amplitude" are unnecessary limitations. (*Id*.). For example, the '372 patent teaches that further amplification can be done on the desired harmonic:

> A harmonically rich signal **5652** is generated and is filtered by a "high Q" filter **5640**, thereby producing a desired signal **5654**. The desired signal **5654** is amplified by amplifier **5642** and routed to transmission module **5644**. The output of transmission module **5644** is transmission signal **5656** . . . .

(Doc. 26-6, 66:26–34).

Similarly, the '940 patent teaches that "the amplitude of the desired harmonic of the harmonically rich signal **2814** is sufficiently high to allow transmission without elaborate filtering or unnecessary amplification…" (*Id.*, 42:20–28). Therefore, ParkerVision argues

[27] The parties briefed and argued these two terms together.

the “sufficient amplitude” limitation in Qualcomm’s construction improperly imports a limitation. (Doc 211, 137:3–6).

As for the limitation “to be transmitted,” Qualcomm argues that it is obvious that “the desired harmonics are the ones that you’re going to want to use and transmit.” (*Id.*, 145:22–24). Qualcomm concedes they are “not trying to exclude the possibility of amplification after you select your harmonic.” (*Id*., 145:25–146:4). Their concern is that there is a difference between the isolated, desired harmonic which has enough amplitude and “one of these infinitesimally small harmonics that might be lingering around that’s just an artifact of the way a device is created.” (*Id*., 146:8–15). Qualcomm’s proposed definition is designed to distinguish these two types of harmonics. (*Id*., 146:16–17). The ‘940 patent addresses this distinction:

> Some of the harmonics are at desired frequencies (such as the frequencies desired to be transmitted). These harmonics are called “desired harmonics” or “wanted harmonics.” According to the invention, desired harmonics have sufficient amplitude for accomplishing the desired processing (i.e., being transmitted). Other harmonics are not at the desired frequencies. These harmonics are called “undesired harmonics” or “unwanted harmonics.”

(Doc. 26-1, 16:26–38).

Qualcomm’s comments at the *Markman* hearing prompted the Court to inquire whether a person of ordinary skill in the art would understand this distinction as taught by the patents. (Doc. 211, 146:18–21). Qualcomm agrees that a person of ordinary skill in the art would appreciate this distinction. (*Id*., 147:7). They confided that their concern is being precluded from making arguments that distinguish harmonics that are not at the desired frequencies. (*Id*., 47:19–21).

Accordingly, the Court adopts the following construction:

Court's Construction: "desired harmonics"
"a plurality of harmonic frequencies that are desired"
Court's Construction: "desired signal"
"a signal/frequency selected for reception and/or transmission"

H. "said input signal"

Claim Term	**Plaintiff's Construction**	**Defendant's Construction**
"said input signal" '177 patent	Not indefinite	Indefinite

Qualcomm contends that "said input signal" as used in Claims 5 and 7-12 of the '177 Patent is indefinite. (Doc. 149). The claims in the issued patent are entitled to a presumption of validity, meaning that all validity challenges—including those under the guise of indefiniteness—must be proven by clear and convincing evidence. *Biosig Instruments, Inc. v. Nautilus, Inc.*, 783 F.3d 1374, 1377 (Fed. Cir. 2015) (quoting *Microsoft Corp. v. i4i Ltd. P'ship*,564 U.S. 91, 111 (2011)); *see also Young v. Lumenis, Inc.*, 492 F.3d 1336 (Fed. Cir. 2007).

As the Court explained in *Young*, "[t]he purpose of the definiteness requirement is to ensure that claims delineate the scope of the invention using language that adequately notifies the public of the patentee's right to exclude." 492 F.3d at 1346. [28] The Supreme

[28] "The specification shall conclude with one or more claims particularly pointing out and distinctly claiming the subject matter which the inventor or a joint inventor regards as the invention." 35 U.S.C. § 112(b).

Court in *Nautilus, Inc. v. Biosig Instruments, Inc.*, 572 U.S. 898 (2014), announced the standard for determining whether a claim is sufficiently definite. The Court held: "we read § 112, ¶ 2 to require that a patent's claims, viewed in light of the specification and prosecution history, inform those skilled in the art about the scope of the invention with reasonable certainty. The definiteness requirement, so understood, mandates clarity, while recognizing that absolute precision is unattainable." *Biosig Instruments*, 572 U.S. 910.[29]

Qualcomm argues that 5 of the '177 Patent includes the phrase "said input signal" but does not provide clear notice of which signal provides the antecedent basis for "said" input signal. (Doc. 149, p. 2). Claim 5 of the '177 patent must be read in context with claim 1, and they provide:

> What is claimed is:
>
> 1. A system for down-converting an electromagnetic signal, comprising:
>
> a first matched filtering/correlating module that receives an input signal, wherein said first matched filtering/correlating module down-converts said input signal according to a first control signal and outputs a first down-converted signal;
>
> a second matched filtering/correlating module that receives said input signal, wherein said second matched filtering/correlating module down-converts said input signal according to a second control signal and outputs a second down-converted signal; and

[29] *Praxair, Inc. v. ATMI, Inc.*, 543 F.3d 1306, 1319 (Fed. Cir. 2008) ("Indefiniteness is a matter of claim construction, and the same principles that generally govern claim construction are applicable to determining whether allegedly indefinite claim language is subject to construction.").

> a first combiner module that combines said second down-converted signal and said first down-converted signal and outputs a first channel down-converted signal.
>
> . . .
>
> 5. The system of claim 1, further comprising:
>
> a third matched filtering/correlating module that receives an input signal, wherein said third matched filtering/ correlating module down-converts said input signal according to a third control signal and outputs a third down-converted signal;
>
> a fourth matched filtering/correlating module that receives said input signal, wherein said fourth matched filtering/ correlating module down-converts said input signal according to a fourth control signal and outputs a fourth down-converted signal; and
>
> a second combiner module that combines said fourth down-converted signal and said third down-converted signal and outputs a second channel down-converted signal.

(Doc. 26-11)

Qualcomm avers that claim 5 of the '177 Patent requires four "modules" that each receive specific signals. The first and third modules each receive "an input signal," whereas the fourth module receives "said input signal." (Doc. 149, pp. 2, 7–8). Qualcomm frames the issue thus:

> Claim 5 recites (including the language from independent claim 1):
>
> 1. A system for down-converting an electromagnetic signal, comprising:
>
> a first matched filtering/correlating module that receives ***an input signal***, . . .;
>
> a second matched filtering/correlating module that receives said input signal, . . .
>
> 5. The system of claim 1, further comprising:

> a third matched filtering/correlating module that receives ***an input signal***, . . .;
>
> a fourth matched filtering/correlating module that receives ***said input signal***, . . .

('177 Patent, claims 1, 5) (emphasis added); (Doc. 149, p. 8).

Qualcomm argues claim 5 is indefinite, because "the claim does not indicate whether "said" input signal refers back to the signal received by the first module or the signal received by the third module. That is, "because claim 5 has two separate instances of 'an input signal' to which 'said input signal' could refer, it does not provide clear notice of the claim scope." (*Id*.).[30] Qualcomm asserts that "[w]here the claim does not provide reasonable certainty as to the antecedent basis, the Court is not required to "guess as to what was intended." *Novo Indus. v. Micro Molds*, 350 F.3d 1348, 1357–58 (Fed. Cir. 2003); (*Id.* at pp. 8-9).

ParkerVision responds by asserting that "[c]laims 5 and 7-12 are not indefinite, . . . because the specification informs, with reasonable certainty, those skilled in the art that the *same* signal, *e.g.*, a I/Q signal, is received and down-converted by each module." (Doc. 170, p. 6). ParkerVision argues that it is "well-settled . . . that claims are not necessarily invalid for a lack of antecedent basis." *Microprocessor Enhancement, Corp. v. Texas Instruments, Inc.*, 520 F.3d 1367, 1376 (Fed. Cir. 2008) (quoting *Energizer Holdings, Inc. v. Int'l Trade Comm'n*, 435 F.3d 1366, 1370–71 (Fed. Cir. 2006) ("Despite the absence of explicit antecedent basis, '[i]f the scope of a claim would be reasonably ascertainable by those skilled in the art, then the claim is not indefinite'"); (*Id.*).

---

[30] Claims 7-12 depend on claim 5; hence, if claim 5 fails, so do claims 7-12.

Parkervision contends that "one skilled in the art would understand that each module receives the same input signal and, as a result, the claim terms 'an input signal' and 'said input signal' refer to the same signal." (*Id*. at p. 7). For example, FIG 197 "illustrates an exemplary I/Q modulation receiver, according to an embodiment of the present invention." (Doc. 26-11, 12:18–19). FIG 197 depicts the following:

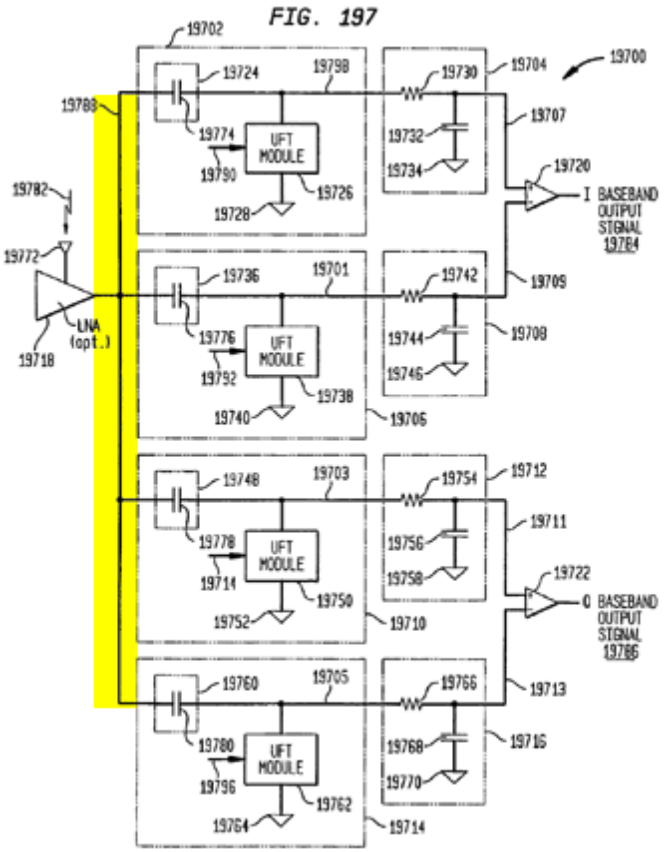

ParkerVision avers FIG 197[31] and the specifications teach "[t]he receiver comprises four processing modules, each of which receives the same amplified I/Q signal, which is element 19788 highlighted in the annotated figure. *See*, '177 patent at 178:17-26, 178:58-63, 179:54-68, 180:23-28." (Doc. 170, p. 7). Accordingly, "one skilled

[31] For the reasons asserted by Plaintiff on pages 8–9 of their brief, Figure 197 is relevant to the "modules" of claim 5.

in the art would understand that each of the four matched filtering/correlating modules of claim 5 receives the same signal, with 'said input signal' referring to this signal. *See also* . . . claim 11(194:40-41) ("11. The system of claim 5, wherein said input signal comprises an RF I/Q modulated signal."). " (*Id*.).[32]

The Court agrees with ParkerVision's analysis and find claims 5 and 7-12 of the '177 patent, viewed in light of the specifications and prosecution history, inform those skilled in the art about the scope of the invention with reasonable certainty such that said signal input does not render the claim(s) indefinite.

V. CONCLUSION

For these reasons, the disputed claims have been construed as set forth in this order and claim 5 and dependent claims 7-12 of the '177 patent are not indefinite.

DONE AND ORDERED in Orlando, Florida on April 29, 2020.

PAUL G. BYRON
UNITED STATES DISTRICT JUDGE

Copies furnished to:

Counsel of Record
Unrepresented Parties

---

32 "Other claims of the patent in question, both asserted and unasserted, can also be valuable sources of enlightenment as to the meaning of a claim term." *AWH Corp*., 415 F.3d at 1314.