UNITED STATES DISTRICT COURT
WESTERN DISTRICT OF TEXAS
WACO DIVISION

PARKERVISION, INC., Plaintiff, **v.** **TEXAS INSTRUMENTS INCORPORATED,** Defendant.	**Case No. 6:23-cv-00384** **JURY TRIAL DEMANDED**

COMPLAINT FOR PATENT INFRINGEMENT

Plaintiff ParkerVision, Inc. ("ParkerVision"), by and through its undersigned counsel, files this Complaint against Defendant Texas Instruments Incorporated ("TI" or "Defendant") for patent infringement of United States Patent Nos. 7,496,342; 7,865,177; and 9,118,528 (the "patents-in-suit") and alleges as follows:

NATURE OF THE ACTION

1. This is an action for patent infringement arising under the patent laws of the United States, 35 U.S.C. §§ 1 *et seq*.

PARTIES

2. Plaintiff ParkerVision is a Florida corporation with its principal place of business at 4446-1A Hendricks Avenue, Suite 354, Jacksonville, Florida 32207.

3. On information and belief, Texas Instruments Incorporated is a publicly traded company organized and existing under the laws of the state of Delaware. Texas Instruments

Incorporated may be served with process through its registered agent, CT Corporation System at 1999 Bryan St., Suite 900, Dallas, Texas, 75201.

JURISDICTION AND VENUE

4. This Court has jurisdiction over the subject matter of this action pursuant to 28 U.S.C. §§ 1331 and 1338(a) because the action arises under the patent laws of the United States, 35 U.S.C. §§ 1 *et seq*.

5. TI is subject to this Court's personal jurisdiction in accordance with due process and/or the Texas Long-Arm Statute. *See* Tex. Civ. Prac. & Rem. Code §§ 17.041 *et seq*.

6. This Court has personal jurisdiction over TI because TI has sufficient minimum contacts with this forum as a result of business conducted within the State of Texas and this judicial district. In particular, this Court has personal jurisdiction over TI because, *inter alia*, TI has substantial, continuous, and systematic business contacts in this judicial district, and derives substantial revenue from goods provided to individuals including in this judicial district.

7. TI has purposefully availed itself of the laws of, and of the privileges of conducting business within, this judicial district, has established sufficient minimum contacts with this judicial district such that it should reasonably and fairly anticipate being hauled into court in this judicial district, has purposefully directed activities at residents of this judicial district, and at least a portion of the patent infringement claims alleged in this Complaint arise out of or are related to one or more of the foregoing activities.

8. This Court has personal jurisdiction over TI because TI (directly and/or through its subsidiaries, affiliates, or intermediaries) has committed and continues to commit acts of infringement in this judicial district in violation of at least 35 U.S.C. § 271(a). In particular, on information and belief, TI manufacturers, uses, sells, offers for sale, imports, advertises, and/or otherwise promotes infringing products (receiver, transmitter, and/or transceiver integrated

circuits (e.g., chips for use in wireless devices)) in the United States, the State of Texas, and this judicial district. The infringing products include, without limitation, wireless transceiver chips including, without limitation, the AFE76XX series, AFE77XX series, AFE79XX series, and AFE80XX series transceivers ("TI Products").

9. On information and belief, TI has a regular and established place of business within the Western District of Texas, including 12357 Riata Trace Pkwy, Suite A-130, Austin, Texas 78727. https://www.ti.com/info/contact-us.html (accessed May 12, 2023). On information and belief, TI has physical facilities and employees in this judicial district.

10. TI has continuously and purposefully availed itself of the laws of the United States, this judicial district, and the State of Texas by filing affirmative counterclaims and affirmatively stating that it did not contest that venue is proper in the following litigations: *Computer Circuit Operations LLC v. Texas Instruments Inc.*, 6:21-cv-00140 (W.D. Tex.); *Sonrai Memory Limited v. Texas Instruments Inc.*, 6:21-cv-1066 (W.D. Tex.).

11. This case is related to at least the following cases before this Court and involves a common patent/technology: *ParkerVision, Inc. v. TCL Industries Holdings Co., Ltd. et al.*, 6:20-cv-00945 (W.D. Tex.); and *ParkerVision, Inc. v. LG Electronics, Inc.*, 6:21-cv-00520 (W.D. Tex.).

12. Venue is proper in this judicial district under 28 U.S.C. §§ 1391(b)-(d) and/or 1400(b) at least because TI has committed acts of infringement within this judicial district giving rise to this action.

PARKERVISION

13. In 1989, Jeff Parker and David Sorrells started ParkerVision in Jacksonville, Florida. Through the mid-1990s, ParkerVision focused on developing commercial video

cameras, e.g., for television broadcasts. The cameras used radio frequency (RF) technology to automatically track the camera's subject.

14. When developing a consumer version of these video cameras, however, ParkerVision encountered a problem – the power and battery requirements for RF communications made a cost effective, consumer-sized product impractical. So, Mr. Sorrells and ParkerVision's engineering team began researching ways to solve this problem.

15. At the time, a decade's-old RF transceiver technology called super-heterodyne dominated the consumer products industry. But this technology was not without its own problems – the circuity was large, expensive, and required significant power.

16. From 1995 through 1998, ParkerVision engineers developed an innovative method of RF direct conversion by a process of sampling an RF carrier signal and transferring energy to create a down-converted baseband signal.

17. After creating prototype chips and conducting tests, ParkerVision soon realized that its technology led to improved RF receiver performance, lower power consumption, reduced size and integration benefits. In other words, RF receivers could be built smaller, cheaper and with greater improved performance.

18. ParkerVision's innovations did not stop there. ParkerVision went on to develop additional RF direct down-conversion technologies, RF direct up-conversion technologies and other related direct-conversion technologies. ParkerVision also developed complementary wireless communications technologies that involved interactions, processes, and controls between the baseband processor and the transceiver, which improved and enhanced the operation of transceivers that incorporate ParkerVision's down-converter and up-converter technologies.

To date, ParkerVision has been granted over 200 patents related to its innovations, including the patents-in-suit.

19. ParkerVision's technology helped make many of today's wireless devices a reality by enabling RF chips used in these devices to be smaller, cheaper, and more efficient, and with higher performance.

20. ParkerVision sold products. To the extent ParkerVision products needed to be marked with a ParkerVision patent number, ParkerVision marked those products in compliance with 35 U.S.C. § 287.

PRIOR DISCUSSIONS BETWEEN THE PARTIES

21. Through its discussions/relationship with ParkerVision, TI engineers/employees learned how to design/develop an integrated circuit (IC)/wireless chip using ParkerVision's patented direct-conversion technology. On information and belief, in developing infringing TI ICs/wireless chips, TI (without ParkerVision's permission) used the knowledge it gained from ParkerVision through meetings as well as ParkerVision documents and/or patents.

22. In January 2000, Jeffrey Parker (ParkerVision's CEO) met with Gilles Delfassy (a TI executive and founder/manager of TI's wireless business unit) to discuss a potential business relationship between ParkerVision and TI. During that meeting, ParkerVision discussed its patented wireless direct down-conversion technology, which ParkerVision marketed under the name Direct-to-Data (D2D).

23. As a result of that meeting, in February 2000, ParkerVision and TI entered into a Mutual Non-Disclosure Agreement ("NDA"). The NDA specifically identified that ParkerVision's D2D technology, which ParkerVision considered confidential and propriety, was to be the subject of discussions between ParkerVision and TI.

> WHEREAS ParkerVision has invented and/or developed certain new and/or improved technologies, systems, products, applications and/or processes relating to direct conversion of electromagnetic signals to baseband, data or intermediate frequency, using non-heterodyning techniques and related technology, which ParkerVision considers confidential and proprietary ("ParkerVision Information"); and

24. Given the highly confidential and proprietary nature of ParkerVision's technology, ParkerVision further required each TI employee involved in any discussions to sign an individual Confidentiality Agreement, which TI agreed to. The TI employees who signed individual Confidentiality Agreements included Jean-Luc Villevielle (WCBU System Engineering Director), William Krenik (RF Product Manager), Bradley Kramer (Transceiver IC Design Manager), Anand Dabak (Senior Member of Technical Staff), and Tim Schmidl (Member of Technical Staff).

25. ParkerVision and TI entered into amended/additional Mutual Non-Disclosure Agreements in March, July, and September 2000.

26. By at least July 2000, TI was sufficiently impressed with ParkerVision's patented D2D technology that TI was considering making an investment in ParkerVision.

> WHEREAS, the parties now desire to exchange not only Information (as defined in the Agreement), but also information relating to their respective businesses for the purpose of evaluation of a potential equity investment and/or business relationship relating to wireless communications / RF technology (all collectively referred to hereafter as "Information").

27. By at least August 2000, ParkerVision sought to use TI's fabrication facilities/foundry services to produce integrated circuits (ICs) incorporating ParkerVision's patented D2D technology. TI informed ParkerVision that it does not usually allow third-parties to use its fabrication facilities and, before TI would do so, TI wanted to understand the technical details regarding an IC incorporating ParkerVision's D2D technology that would be built for ParkerVision in a TI semiconductor fabrication facility.

28. In August 2000, ParkerVision received a quotation for TI to produce ParkerVision ICs incorporating ParkerVision's patented D2D technology.

29. By at least September 2000, TI sought to learn the technical details regarding the integrated circuits ParkerVision was designing and developing.

> WHEREAS, ParkerVision wishes to disclose, and Company wishes to receive, ParkerVision Information pertaining to integrated circuits (IC) being designed and developed by ParkerVision ("ParkerVision IC Information"), and disclosure of the ParkerVision IC Information is beyond the level of disclosure originally contemplated by the parties under the Agreement; and
>
> WHEREAS, this disclosure of ParkerVision IC Information is to be conducted during the following day(s): 8 September 2000 through 15 September 2000 (the "Extended Disclosure Period").

30. After several meetings, multiple technology disclosures, and thorough review of ParkerVision's patented D2D technology (including detailed analysis of ParkerVision's patents and claims), TI was sufficiently impressed that, in March 2001, TI entered into a development and foundry agreement with ParkerVision to jointly develop ParkerVision's RF transceivers based on ParkerVision's D2D technology and TI's baseband chipsets. Under the agreement, TI would provide foundry services for ParkerVision's ICs using TI's semiconductor process technology and fabrication manufacturing.

31. In conjunction with the development and foundry agreement, TI made an investment in ParkerVision. In particular, TI purchased $2,500,000 of ParkerVision stock and received over $2,500,000 in options/warrants to purchase ParkerVision stock. ParkerVision and TI issued a joint press release announcing the deal.

32. In May 2001, ParkerVision engineers (including David Sorrells, ParkerVision CTO and an inventor of ParkerVision's patents on D2D technology) and TI engineers met to discuss technology theory, technology benefits, circuit implementations, and product development.

33. On information and belief, in 2002, TI representatives visited PakerVision's offices to discuss ParkerVision's development of D2D and moving to a CMOS design.

34. In August 2002, TI provided ParkerVision with a quote for producing ICs in one of its manufacturing facilities.

35. In March 2008, TI and ParkerVision entered into a Non-Disclosure Agreement to discuss, amongst other things, data measurements, architecture, specifications for ParkerVision's D2D and D2P RF ICs for mobile devices.

THE ASSERTED PATENTS

United States Patent No. 7,496,342

36. On February 24, 2009, the United States Patent and Trademark Office duly and legally issued United States Patent No. 7,496,342 ("the '342 patent") entitled "Down-Converting Electromagnetic Signals, Including Controlled Discharge of Capacitors" to inventor David F. Sorrells et al.

37. The '342 patent is presumed valid under 35 U.S.C. § 282.

38. ParkerVision owns all rights, title, and interest in the '342 patent.

United States Patent No. 7,865,177

39. On January 4, 2011, the United States Patent and Trademark Office duly and legally issued United States Patent No. 7,865,177 ("the '177 patent") entitled "Method and System for Down-Converting An Electromagnetic Signal, And Transforms For Same, And Aperture Relationships" to inventor David F. Sorrells et al.

40. The '177 patent is presumed valid under 35 U.S.C. § 282.

41. ParkerVision owns all rights, title, and interest in the '177 patent.

United States Patent No. 9,118,528

42. On August 25, 2015, the United States Patent and Trademark Office duly and legally issued United States Patent No. 9,118,528 ("the '528 patent") entitled "Method and System for Down-Converting an Electromagnetic Signal, and Transforms for Same, and Aperture Relationships" to inventor David F. Sorrells et al.

43. The '528 patent is presumed valid under 35 U.S.C. § 282.

44. ParkerVision owns all rights, title, and interest in the '528 patent.

CLAIMS FOR RELIEF

COUNT I – Infringement of United States Patent No. 7,496,342

45. The allegations set forth above are re-alleged and incorporated by reference as if they were set forth fully here.

46. TI directly infringes (literally and/or under the doctrine of equivalents) the '342 patent by making, using, selling, offering for sale, and/or importing in/into the United States products covered by at least claim 19 of the '342 patent. TI infringes each step of claim 19 because the TI Chips automatically, and without user modification, perform each of the claimed steps.

47. On information and belief, TI products that infringe at least claim 19 of the '342 patent include, but are not limited to, the TI Chips and any other TI product that is capable of down-converting a higher-frequency signal to a lower-frequency signal as claimed in the '342 patent. *See, e.g.,* N. Klemmer et al., "A 45nm CMOS RF-to-Bits LTE/WCDMA FDD/TDD 2×2 MIMO Base-Station Transceiver SoC with 200MHz RF Bandwidth," in *IEEE Int. Solid-State Circuits Conf. (ISSCC) Dig. Tech. Papers*, 2016, pp. 164-165; N. Klemmer (2016, February 2). *A 45nm CMOS RF-to-Bits LTE/WCDMA FDD/TDD 2×2 MIMO Base Station Transceiver SoC with 200MHz RF Bandwidth* [PowerPoint]. ISSCC, San Francisco, CA, USA.

Paper No. : 9.1

A 45nm CMOS RF-to-Bits LTE/WCDMA FDD/TDD 2x2 MIMO Base Station Transceiver SoC with 200MHz RF Bandwidth

N.Klemmer, S.Akhtar, V.Srinivasan, P.Litmanen, H.Arora, S.Uppathil, S.Kaylor, A.Akour, V.Wang, M.Fares, F.Dulger, A.Frank, D.Ghosh, S.Madhavapeddi, H.Safiri, J.Mehta, A.Jain, S.Aluri, H.Choo, E.Zhang, C.Sestok, C.Fernando, Rajagopal K.A.*, S. Ramakrishnan*, V.Sinari*, V.Baireddy*, M.Rao*, S.Joginipally*
Texas Instruments, Dallas, TX, USA *) Texas Instruments, Bangalore, India

Motivation

→ **High integration 2x2 MIMO BS transceiver for lower power, size, complexity and cost in 4.5G, 4G, and 3G Macro, Micro, and Pico small cells.**

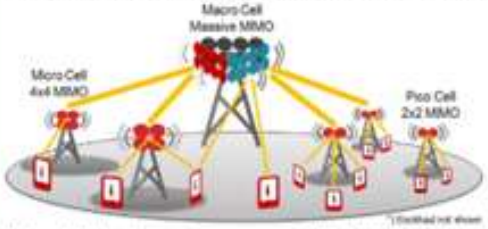

Global mobile data is growing exponentially (12/2015: 6 10^{18} B/mo.)

➔ Mobile capacity cost efficiency increase ~1.5x per year

➔ Higher signal path bandwidth and increased integration level.

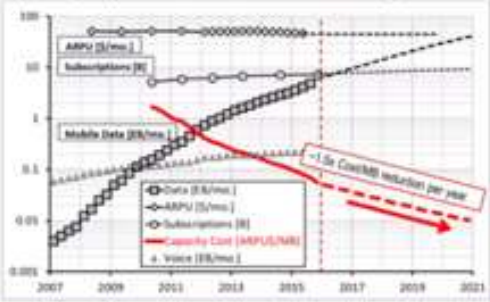

*) Data from: Ericsson Mobility Reports 2011-2015, Strategy Analytics (US-ARPU)

Architecture

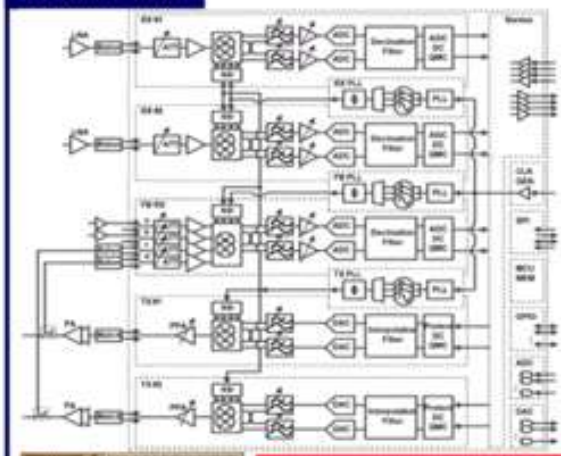

4G 2x2 MIMO RF SoC

- 400MHz – 4GHz
- RX/TX 100/200MHz BW
- Aux. RX 200MHz BW
- 3 PLLs (RX/TX/Aux)
- 40Gbps Serdes throughput
- Cal. & BIST via MCU

System Implementation

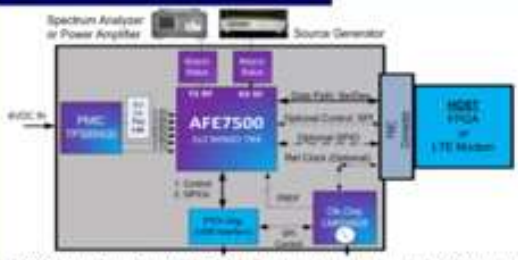

* USB interface for AFE7500 firmware download & API control
* Stand alone Eval.PCB – with clock (TI LMK04828) and power management (TI TPS65400 DC/DC)
* FMC data connector for JESD204B SerDes interface to TI TSW14J56 Pattern Generator and Data Capture board.
* uses TI HSDC-Pro capture/generator software

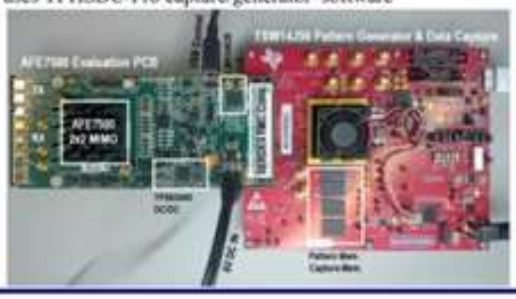

Verification

AFE7500 with PA (SKY66297@26.8dBm) and DPD. Demo on TI DSP (TCI6630K2L)

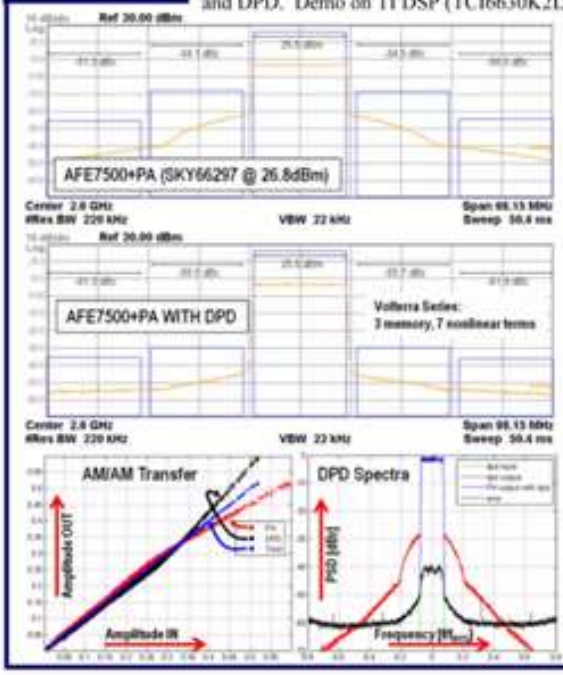

ParkerVision Exhibit 2001
TI v. ParkerVision - IPR2024-00935

N. Klemmer et al., "A 45nm CMOS RF-to-Bits LTE/WCDMA FDD/TDD 2×2 MIMO Base-Station Transceiver SoC with 200MHz RF Bandwidth," https://www.slideshare.net/AaronFrank5/demo091-1 (accessed May 16, 2023).

48. On information and belief, TI uses the TI Chips at least by testing or demonstrating (or having others do so on its behalf) the TI Chips in the United States.

49. On information and belief, each TI Chip performs a method of down-converting an electromagnetic signal (e.g., high frequency RF signal) to a lower frequency signal. The method is performed on the receiver side of each TI Chip.

50. On information and belief, each TI Chip receives an information signal (e.g., high frequency RF signal). On information and belief, an inverter circuit (e.g., MOS inverter) in each TI Chip inverts the information signal to generate an inverted information signal (e.g., inverted high frequency RF signal).

51. On information and belief, for example, a first switching device (e.g., one or more transistors) and/or metal traces in each TI Chip electrically couples the information signal to a first capacitor.

52. On information and belief, a second switching device (e.g., one or more transistors) and/or metal traces in each TI Chip electrically couples the inverted information signal to a second capacitor.

53. On information and belief, each TI Chip controls a charging and discharging cycle of the first capacitor with a first switching device (e.g., one or more transistors) electrically coupled (e.g., through metal traces) to the first capacitor. On information and belief, each TI Chip controls a charging and discharging cycle of the second capacitor with a second switching

device (e.g., one or more transistors) electrically coupled (e.g., through metal traces) to the second capacitor.

54. On information and belief, each switching device controls the charging and discharging cycles as follows: Each switching device turns ON and OFF. When a switching device is ON (receives an LO signal during a sampling aperture), energy is transferred from the information signal to the capacitor, which accumulates energy (charging cycle). When the switch is OFF (between sampling apertures), the capacitor transfers/discharges energy (discharging cycle) to a low impedance load (e.g., one or more resistors).

55. On information and belief, each TI Chip performs a plurality of charging and discharging cycles of the first capacitor to generate a first down-converted information signal (e.g., a baseband signal) across a first impedance device (low impedance load (e.g., one or more resistors)).

56. On information and belief, each TI Chip performs a plurality of charging and discharging cycles of the second capacitor to generate a second down-converted information signals (e.g., a baseband signal) across a second impedance device (low impedance load (e.g., one or more resistors)).

57. On information and belief, the information signal (e.g., high frequency RF signal) is used to store a charge on the first capacitor when the first switching device (e.g., one or more transistors) is closed (e.g., when the transistor is ON/receives an LO signal) and the inverted information signal (e.g., inverted high frequency RF signal) is used to store a charge on the second capacitor when the second switching device (e.g., one or more transistors) is closed (e.g., when the transistor is ON/receives an LO signal).

58. On information and belief, the first capacitor of each TI Chip discharges between six percent to fifty percent of the total charge stored therein during a period of time that the first switching device (e.g., one or more transistors) is open (e.g. when the transistor(s) is OFF), and the second capacitor discharges between six percent to fifty percent of the total charge stored therein during a period of time that the second switching device (e.g., one or more transistors) is open (e.g., when the transistor(s) is OFF).

59. ParkerVision has been damaged by the direct infringement of TI and is suffering and will continue to suffer irreparable harm and damages as a result of this infringement.

COUNT II - Infringement of United States Patent No. 7,865,177

60. The allegations set forth above are re-alleged and incorporated by reference as if they were set forth fully here.

61. TI directly infringes (literally and/or under the doctrine of equivalents) the ’177 patent by making, using, selling, offering for sale, and/or importing in/into the United States products covered by at least claim 14 of the ’177 patent. TI infringes each step of claim 14 because the TI Chips automatically, and without user modification, perform each of the claimed steps.

62. On information and belief, TI products that infringe at least claim 14 of the ’177 patent include, but are not limited to, the TI Chips and any other TI product that is capable of down-converting a higher-frequency signal to a lower-frequency signal as claimed in the ’177 patent. *See, e.g.,* N. Klemmer et al., “A 45nm CMOS RF-to-Bits LTE/WCDMA FDD/TDD 2×2 MIMO Base-Station Transceiver SoC with 200MHz RF Bandwidth,” in *IEEE Int. Solid-State Circuits Conf. (ISSCC) Dig. Tech. Papers*, 2016, pp. 164-165; N. Klemmer (2016, February 2). *A 45nm CMOS RF-to-Bits LTE/WCDMA FDD/TDD 2×2 MIMO Base Station Transceiver SoC*

with 200MHz RF Bandwidth [PowerPoint]. ISSCC, San Francisco, CA, USA; N. Klemmer et al., "A 45nm CMOS RF-to-Bits LTE/WCDMA FDD/TDD 2×2 MIMO Base-Station Transceiver SoC with 200MHz RF Bandwidth," https://www.slideshare.net/AaronFrank5/demo091-1 (accessed May 16, 2023). On information and belief, TI uses the TI Chips at least by testing or demonstrating (or having others do so on its behalf) the TI Chips in the United States.

63. On information and belief, the TI Chips perform a method for down-converting an electromagnetic signal (e.g., high frequency RF signal). The method is performed on the receiver side of each TI Chip.

64. On information and belief, each TI Chip receives an input signal (e.g., high frequency RF signal) at a first and second matched filtering/correlating module. Each matched filtering/correlating module is linear time-variant circuitry that samples a modulated RF carrier signal at an aliasing rate. On information and belief, sampling is performed using a switch (e.g., one or more transistors), which turns ON and OFF. The switch has an independent control input that is driven by a control signal (e.g., LO signal). On information and belief, the control signal has non-negligible, periodic apertures (e.g., periods of time when the transistor(s) is ON/receives a 25% duty cycle LO signal). On information and belief, non-negligible amounts of energy from the RF signal is accumulated (e.g., in one or more capacitors in each matched filtering/correlating module) and transferred to a low impedance load (e.g., one or more resistors) during an aperture period (e.g., when the switch is closed (ON)). Each TI Chip meets wireless telecommunication standards including, but not limited to, 3G and 4G. *See, e.g.,* https://www.ti.com/lit/ds/symlink/afe7988.pdf?ts=1683922899530&ref_url=https%253A%252F%252Fwww.ti.com%252Fproduct%252FAFE7988. On information and belief, the capacitor(s) discharge(s) energy through the low impedance load between aperture periods (e.g., when the

switch is open (OFF)). In this way, real power from the RF signal is transferred to the low impedance load and produces a down-converted signal with enhanced signal-to-noise power ratio.

65. On information and belief, each TI Chip down-converts the input signal at the first matched filtering/correlating according to a first control signal (e.g., a first LO signal) and outputs a first down-converted signal (e.g., a first baseband signal).

66. On information and belief, each TI Chip down-converts the input signal at the second matched filtering/correlating according to a second control signal (e.g., a second LO signal) and outputs a second down-converted signal (e.g., a second baseband signal).

67. On information and belief, a differential amplifier circuit in each TI Chip combines the second down-converted signal (e.g., second baseband signal) and the first down-converted signal (e.g., first baseband signal) to output a first channel down-converted signal.

68. ParkerVision has been damaged by the direct infringement of TI and is suffering and will continue to suffer irreparable harm and damages as a result of this infringement.

COUNT III - Infringement of United States Patent No. 9,118,528

69. The allegations set forth above are re-alleged and incorporated by reference as if they were set forth fully here.

70. TI directly infringes (literally and/or under the doctrine of equivalents) the ’528 patent by making, using, selling, offering for sale, and/or importing in/into the United States products covered by at least claim 1 of the ’528 patent.

71. On information and belief, TI products that infringe at least claim 1 of the ’528 patent include, but are not limited to, the TI Chips and any other TI product that is capable of down-converting a higher-frequency signal to a lower-frequency signal as claimed in the ’528 patent. *See, e.g.,* N. Klemmer et al., “A 45nm CMOS RF-to-Bits LTE/WCDMA FDD/TDD 2×2

MIMO Base-Station Transceiver SoC with 200MHz RF Bandwidth," in *IEEE Int. Solid-State Circuits Conf. (ISSCC) Dig. Tech. Papers*, 2016, pp. 164-165; N. Klemmer (2016, February 2). *A 45nm CMOS RF-to-Bits LTE/WCDMA FDD/TDD 2×2 MIMO Base Station Transceiver SoC with 200MHz RF Bandwidth* [PowerPoint]. ISSCC, San Francisco, CA, USA. N. Klemmer et al., "A 45nm CMOS RF-to-Bits LTE/WCDMA FDD/TDD 2×2 MIMO Base-Station Transceiver SoC with 200MHz RF Bandwidth," https://www.slideshare.net/AaronFrank5/demo091-1 (accessed May 16, 2023). On information and belief, TI uses the TI Chips at least by testing or demonstrating (or having others do so on its behalf) the TI Chips in the United States.

72. On information and belief, each TI Chip is/includes a system for frequency down-converting a modulated carrier signal (e.g., high frequency RF signal) to a baseband signal. Each TI Chip includes a first switch (e.g., one or more transistors) coupled to a first control signal (e.g., an LO signal) which comprises a sampling aperture (e.g., 25% duty cycle) with a specified frequency, wherein the first switch is on and a portion of energy that is distinguishable from noise is transferred from the modulated carrier signal (e.g., high frequency RF signal) as an output of the first switch during the sampling aperture of the first control signal. Each TI Chip meets wireless telecommunication standards including, but not limited to, 3G and 4G. *See, e.g.,*https://www.ti.com/lit/ds/symlink/afe7988.pdf?ts=1683922899530&ref_url=https%253A%252F%252Fwww.ti.com%252Fproduct%252FAFE7988. On information and belief, each TI Chip includes a first energy storage element (e.g., one or more capacitors) that stores the transferred energy from the modulated carrier signal and outputs a down-converted in-phase baseband signal portion of the modulated carrier signal.

73. On information and belief, each TI Chip includes a second switch (e.g., one or more transistors) coupled to a second control signal (e.g., an LO signal) which comprises a

sampling aperture (e.g., 25% duty cycle) with a specified frequency, wherein the second switch is on and a portion of energy that is distinguishable from noise is transferred from the modulated carrier signal (e.g., high frequency RF signal) as an output of the second switch during the sampling aperture of the second control signal.

74. On information and belief, each TI Chip includes a second energy storage element (e.g., one or more capacitors) that stores the transferred energy from the modulated carrier signal and outputs a down-converted inverted in-phase baseband signal portion of the modulated carrier signal.

75. On information and belief, the portions of transferred energy from each of the first and second switch are integrated over time to accumulate the portions of transferred energy from which the down-converted in-phase baseband signal portion and the down-converted inverted in-phase baseband signal portion are derived.

76. On information and belief, each TI Chip includes a first differential amplifier circuit that combines the down-converted in-phase baseband signal portion with the down-converted inverted in-phase baseband signal portion and outputs a first channel down-converted differential in-phase baseband signal.

77. ParkerVision has been damaged by the direct infringement of TI and is suffering and will continue to suffer irreparable harm and damages as a result of this infringement.

JURY DEMANDED

Pursuant to Rule 38(b) of the Federal Rules of Civil Procedure, ParkerVision hereby requests a trial by jury on all issues so triable.

PRAYER FOR RELIEF

WHEREFORE, ParkerVision respectfully requests that the Court enter judgment in its favor and against TI as follows:

a. finding that TI directly infringes one or more claims of each of the patents-in-suit;

b. awarding ParkerVision damages under 35 U.S.C. § 284, or otherwise permitted by law, including supplemental damages for any continued post-verdict infringement;

c. awarding ParkerVision pre-judgment and post-judgment interest on the damages award and costs;

d. awarding cost of this action (including all disbursements) and attorney fees pursuant to 35 U.S.C. § 285, or as otherwise permitted by the law; and

e. awarding such other costs and further relief that the Court determines to be just and equitable.

Dated: May 18, 2023

Respectfully submitted,

THE MORT LAW FIRM, PLLC

/s/Raymond W. Mort, III
Raymond W. Mort, III
Texas State Bar No. 00791308
raymort@austinlaw.com
501 Congress Avenue, Suite 150
Austin, Texas 78701
Tel/Fax: 512-865-7950

Attorneys for Plaintiff ParkerVision, Inc.

OF COUNSEL:

Ronald M. Daignault*#
Chandran Iyer*
Jason Charkow*#
Scott Samay*#
Stephanie Mandir*
Zachary H. Ellis* (Texas State Bar No. 24122606)
DAIGNAULT IYER LLP
rdaignault@daignaultiyer.com
cbiyer@daignaultiyer.com
jcharkow@daignaultiyer.com
ssamay@daignaultiyer.com
smandir@daignaultiyer.com
zellis@daignaultiyer.com
8618 Westwood Center Drive
Suite 150
Vienna, VA 22182

#Not admitted in Virginia
**Pro hac vice to be filed*