Norcal NC2030

Low power, High Performance
20m or 30m DC Transceiver

TI 1047
TI v. ParkerVision
IPR2024-00936

Table of Contents

A Bit of History and Recognition 8
Specifications 10
  Receiver 10
  Transmitter 10
Building the Kit 12
  Things you will need 12
  Parts List 14
  Tools and Construction Hints 21
  Power Supply 23
  Switching Regulator Tests 29
  Main Board Temporary Power Connections 30
  Main Board 3v and 5v Regulators 31
    3v and 5v LDO Regulator Tests 35
  HPF, Audio Amp, Mute, Audio Limiter and Headphone Drivers 37
    Audio Section Partial Tests 39
  SCAF Variable Low Pass Filter 39
    SCAF and Additional Audio Section Tests 40
  CW Keyer 42
  Audio Frequency Annunciator 44
  Adding external controls for functionality tests 45
    Keyer, AFA and Additional Audio Section Tests 51
  VXO and T/R Offset 52
  AFA RF Buffer and Phase Splitter 55
  Band Specific Parts 56
  VXO and AFA Buffer Tests 57
  LO Mixer and PTO 59
  LO Filter and LO amp 67
    First time LO filter tune up 69
  Quadrature detector/front end filter 70
    Detector Tests 73
  Audio Pre-amp and Audio Phasing 74
    Audio Pre-amp and Audio Phasing Tests 76
  Main Audio filter 76
    Main Audio Filter Tests 78
  Transmitter 79
  Transmitter Tests 82
  Mounting into the case 85
    Bolt down the PC board 85
    Add front panel hardware 85
    Add rear panel hardware 89
  Receiver alignment section 96
    LO Filter tune up 96
  PTO Frequency Alignment 97
  PTO tuning for the 20m version (2.941 to 3.006 MHz) 97

PTO tuning for the 30m version (2.850 to 2.900 MHz) 98
Mixer/LO Amp Gain selection 98
RF front end tune up 100
Opposite sideband suppression 102
Setting RX/TX offset 104
Transmitter Test 106
Operating the NC2030 106
Principles of operation 109
Transceiver Block Diagram 109
Receiver 109
T/R switch 109
Detector/ AF pre-amp 110
Phasing strip 113
R/C Audio Filter – Low pass 114
R/C Audio Filter – High pass 115
Audio Amplifier, Mute Switch & Audio Limiter 116
SCAF Variable Low Pass Filter & Headphone Drivers 117
PTO Circuit 118
VXO Circuit (20m - 11.059 MHz, 30m – 13.0 MHz) 118
LO Mixer and IF Filter 120
LO IF amp and Phase Splitter 120
Transmitter 121
Class E PA finals 121
CW Waveform shaping 122
High Voltage/High Current PA protection 122
AFA Frequency Counter Instructions 122
Introduction 122
Counter Modes 122
Mode 123
Digits Announced 123
Counter Usage 123
Keyer Instructions 124

List of Figures

Figure 1. Working over an oversized cookie sheet is highly recommended to catch stray surface mounted parts 13
Figure 2. A temperature controlled soldering helps a lot. 650 to 700 degrees is recommended. 13
Figure 3. A very pointed soldering iron tip is a very big help for small surface mounted components .. 13
Figure 4. Headband Magnifiers. “Mag-eyes” from JoAnn Fabrics 14
Figure 5. Parts in bag pockets are accessed via slit cut into the packet just larger enough to get the part out. 15
Figure 6. Close up of a surface mount parts strip and the bag slit just large enough to access the strip. . 15
Figure 7. A sample bag pocket layout diagram vs. a real bag of parts. 16

Figure 8. Layout of the power supply and the first three bags 17
Figure 9. Layout of bags # 3 to # 6 18
Figure 10. Contents of bags #7 - #9 19
Figure 11. Completed Switching PS with Temporary 9v Power Connection and 100 ohm 3.3v Dummy Load 23
Figure 12. Board layout of the switching power supply. 23
Figure 13. Switching supply built up 24
Figure 14. Orientation of U1. Mount with the markings “AANY” upside down as shown. 24
Figure 15. PS with 0.1 Caps, 47 uH inductors, Schottky diodes, and Switching IC 25
Figure 16. PS and Electrolytic Caps Polarity Details 25
Figure 17. L2 mounting details 26
Figure 18. L2 details. After first 24 turns, add a twisted loop for later center tap. Add 27 more turns after this. 27
Figure 19. Form 1N4001 Diode as Shown 27
Figure 20. 100 ohm Temporary 3v Load Resistor Formed as Shown 27
Figure 21. 1N4001 Mounted and 9v Battery Clip Connected 28
Figure 22. 3v Temporary 100 Ohm Load Resistor Connected to Bottom of Board 28
Figure 23. Power Output Connection Details (Load resistor not shown) 29
Figure 24. Temporary 9v power connection and connections between switching supply and main board 30
Figure 25. Close up of power connections on the main board and switching supply, bypass caps, and polarity diode 31
Figure 26. Location of the two 3v and 5v regulator sections 31
Figure 27. Close up of first two 3v LDO regulators 32
Figure 28. Parts layout of first two 2.9v LDO regulators. Note the black band orientation of the electrolytic caps. 32
Figure 29. Location of the one 3v and two 5v LDO regulator sections 33
Figure 30. Installed parts for this section of LDO regulators. Note the black band orientation on the electrolytic caps. 34
Figure 31. Ground reference for voltage measurements are upper 2 corners, the lower 2 are not connected 35
Figure 32. SCAF, HPF, Audio Amp, and Headphone driver section of the board 37
Figure 33. HPF, Audio Amp, Headphone Drivers portion 37
Figure 34. Picture shows orientation of U11 with stripe on upper end. 38
Figure 35. General location of the SCAF circuit 39
Figure 36. Close up component view of the SCAF section of the board 39
Figure 37. U13 and D10 mounted. IC notch and D10 flat side in the vertical direction. 40
Figure 38. Location of the CW Keyer section of the board 42
Figure 39. Close up of the CW Keyer section. 42
Figure 40. Picture showing correct orientation of Norcal Keyer Chip (optional socket not shown) 43
Figure 41. General Location of AFA circuit 44
Figure 42. Close up view of the AFA section 44
Figure 43. Correct orientation of both the 8 pin 12C508 AFA chip and 14 pin 74ACT00 ICs. 45
Figure 44. Connect buttons keyer and AFA buttons S2 and S3 as shown 46
Figure 45. Prepare R88 100K Cw speed pot as shown. The left and middle terminals are connected to the white lead 47

Figure 46. Connect R88 CW speed pot to the R88 pads as shown. Keep black and white in order shown. 47
Figure 47. Use Brown/Red/Orange wire and connect up the paddle jack in the color order shown. 47
Figure 48. Attach paddle jack to JP5 using the color order shown. 48
Figure 49. Use Brown/Red/Orange wire and connect up the headphone jack in the color order shown 48
Figure 50. Connect the headphone jack to JP4 in the color order shown 48
Figure 51. Use Yellow/Green/Blue wire to connect to R83, the 50k SCAF pot in the color order shown 49
Figure 52. Connect the 50K SCAF pot to the R83 header pads in the color order shown 49
Figure 53. Use Yellow/Green/Blue wire to connect to R77, the 5K volume control pot in the color order shown 49
Figure 54. Connect the 5K volume control pot to the R77 header pads in the color order shown 50
Figure 55. All controls attached thus far 50
Figure 56. Location of VXO and T/R offset circuit 52
Figure 57. Close up of VXO and T/R offset circuit 52
Figure 58. Proper orientation of U8, D2, and D3 53
Figure 59. Yellow/Green/Blue wire to connect to R52, the 25k RIT pot in the color order shown 54
Figure 60. Connect the 25K RIT pot to the R52 header in the color order shown. Also attach a SPDT switch to S1 54
Figure 61. General location of the AFA RF Buffer and Phase Splitter 55
Figure 62. Close up view of the AFA RF Buffer and Phase Splitter Area 55
Figure 63. Orientation of U9 labeling as installed. 56
Figure 64. Temporary connection from C72 to C54 57
Figure 65. Board Location of the LO mixer and PTO circuitry 59
Figure 66. Close up of the PTO and Mixer section of the board 59
Figure 67. PTO and PTO/VXO mixer sections as built 60
Figure 68. Temporary soda straw PTO coil L13 connected to the PTO oscillator circuit. 61
Figure 69. Anchoring the first turn of the temporary PTO coil. 62
Figure 70. Finished temporary PTO coil with 82T. Tie off holes placed on both ends 62
Figure 71. McDonald's straw diameter. 63
Figure 72. Main tuning PTO coil L13 shown mounted to the front panel. This is used only when the rig is finished. 63
Figure 73. Wrap first turn on the PTO coil. Position ¾" back from front, twist single turn in place..... 64
Figure 74. First turn is glued (epoxy) into place to make it easier to wrap the rest of the turns 64
Figure 75. Coil with completed 105 turns. Turns wound tight and "shoulder to shoulder". 65
Figure 76. PTO coil coated in clear nail polish. The wife recommends "Sally Hansen Diamond Strength" 65
Figure 77. 2" brass screw cut back to a total length of 1 ¾ inches. 66
Figure 78. Final screw with mounted spacer. 66
Figure 79. General location of LO Filter and Amp 67
Figure 80. Close up of the LO Filter and Amp components 67
Figure 81. LO Filter and amplifier as built. Both trim caps must have proper orientation 68
Figure 82. Coils L6 and L7 are prepared to be mounted surface mount style on the top of the board on the coil holes 68
Figure 83. General location of the Detector and Front End Filter 70
Figure 84. Close up of the detector and the RF tuned front end 70

Figure 85. Picture of detector and RF front end with parts installed. Note trim cap orientation and jumper on JP3! 71
Figure 86. Detail on T1. Two turn # 32 to pads 1 & 2. Main winding connect to pads 3 & 4. 72
Figure 87. L2 leads formed to prepare for surface mounting on the top of the through hole pads provided. 72
Figure 88. Location of Audio Preamp and Phasing sections 74
Figure 89. Close up of Audio Preamp and Phasing sections 74
Figure 90. Component alignment of U4, and U5. Note C30, R22 locations 75
Figure 91. General location of the Audio 750 Hz LPF 76
Figure 92. Close up of the 750 Hz Audio LPF section 77
Figure 93. Component placement and alignment of U7 and polarization of caps C47, C48, C49 77
Figure 94. General location of the Transmitter section 79
Figure 95. Close up of the transmitter section portion 79
Figure 96. All transmitter parts except for the inductors. Note TS912 orientation, BS170 flat side orientation. 80
Figure 97. L19 mounted. 3T tap location shown. 81
Figure 98. Location of U9 and pins voltages to check. In receive mode, check, U9 pins 11 (0v), 12 &13 (2.9v). 82
Figure 99. Location of U15 between AFA and Keyer chips. Test pins 11, 12, and 13 83
Figure 100. Location of R95 and R96. Voltages on transmit/receive switches 84
Figure 101. Mount all four corners of the main board using the mounting hardware as shown. 85
Figure 102. NC2030 with all front panel hardware mounted in prototype chassis. Case will be silk screened 85
Figure 103. Mount the paddle jack. 86
Figure 104. Mount the headphone jack 86
Figure 105. Add Keyer button (upper left), AFA button (lower right) 87
Figure 106. Mount the volume control pot (upper right) and the spot switch (lower middle). 87
Figure 107. Another view of the spot switch. The two terminals are orientated in the “up” position. .. 88
Figure 108. Add keyer speed pot, SCAF Pot, and RIT pot. 88
Figure 109. Rear panel of prototype NC2030. Final case will be silk screened. 89
Figure 110. Antenna jack added 89
Figure 111. Rear power connections: Power switch, leads to rear switching supply, power jack (not shown) 90
Figure 112. Power jack connections, +12v to power switch (red wire) and ground (green) to JP2 ground pad 90
Figure 113. Placement of the switching supply tin on the back chassis, power jack not installed. 91
Figure 114. Place the switching supply board in the tin, center it top & bottom, and mark the mounting holes 92
Figure 115. Connect the power wires to the switching supply in the color order shown. 93
Figure 116. PTO L13 mounting detail. Coil connections shown. Front PTO coil wire must connect as shown. 93
Figure 117. Connections for the PTO coil L13 94
Figure 118. Front side of the PTO coil (prototype chassis) showing epoxy ridge from the front side .. 94
Figure 119. Tuning knob with PTO screw partially inserted 95
Figure 120. PTO brass screw full inserted into the PTO coil 95

Figure 121. With PTO screw fully inserted, adjust tuning knob to have a small amount of front panel clearance. 96
Figure 122. Location of LO trim caps C58, C60 and TP3 in the upper left corner of the board..... 96
Figure 123. L13 PTO tuning coil as mounted. Remove turns off the end simply by pulling on the wire. 97
Figure 124. Location of R63, PTO/VXO mixer gain adjust located in bottom left corner of board..... 99
Figure 125. Location of optional LO amplifier gain adjust resistor R50..... 100
Figure 126. Location of RF front end band pass filter adjust trim caps, C23 and C25 on top middle of the board..... 100
Figure 127. Adjustment points for nulling out the opposite sideband..... 102
Figure 128. Picture of simulated opposite sideband rejection when optimally tuned up. 103
Figure 129. Location of the T/R offset trim pot, R53. 105
Figure 130. Tayloe quadrature detector and I/Q audio preamplifier schematic 110
Figure 131. Audio phasing section schematic 113
Figure 132. Main brick wall filter. 800 Hz active R/C low pass filter. 114
Figure 133. 400 Hz High pass filter schematic..... 115
Figure 134. SCAF Low Pass Filter and Headphone Amplifier 117
Figure 135. PTO schematic..... 118
Figure 136. VXO schematic and transmit/receive offset switching 118
Figure 137. LO Mixer and IF Filter schematic 120
Figure 138. Schematic of LO amplifier and detector clock phase splitter..... 120
Figure 139. Schematic of Class E Transmitter 121
Figure 140. A Function Table of the Keypress Combinations 124
Figure 141. Mem + dit menu (PAR mem to advance to the next menu item)..... 125
Figure 142. Mem + dah menu (PAR mem to exit) 126
Figure 143. Mem switch menu (PAR mem to advance to the next menu item)..... 127
Figure 144. Mem + both menu (PAR mem to exit)..... 127

A Bit of History and Recognition

The basic design of the detector used in this transceiver first came about in 1998, a bit over seven years ago. I came up with the idea for the detector during a 5000+ mile road trip with the family from Phoenix to Newark, New Jersey, down to Disney in Florida, and back home again to Phoenix.

When I got back home, I bread boarded the detector idea using some then newly released bus switching ICs and discovered that it not only worked, but that it had other interesting properties such as a band pass characteristic and very low loss detection.

As soon as I found that the detector worked, I quickly built a simple image rejection receiver around it and brought the transceiver to Norcal's Pacificon QRP convention. At the Pacificon Friday evening QRP dinner, I found myself talking to Doug Hendricks about the design. Doug picked up interest in the design and offered some development money if I allowed Norcal to produce a kit based on the design. I accepted, and the rest is history.

This is my 7th design in a string of designs where incremental improvements have been made over time. The NC2030 design attempted to maximize receiver performance give a receiver current drain constraint of roughly 10 ma at 12v. The NC2030 draws roughly 12ma in its current form, while providing 140+ db of blocking dynamic range and 107+ db of third order intercept dynamic range while operating at full receiver sensitivity. This receiver performance is unmatched by anything commercially available today.

Across this seven year span of time, there were many folks that helped me in my pursuit of this design and I want to take a moment and recognize a few of them.

Kent Torrel for calculating the theoretical detection loss of the detector. In addition, he helped me measure the performance of my first receiver prototype before I had my own test equipment.

Brian Kessel was a ScQRPion member that gave me my first pair of signal generators. This enabled me to measure sensitivity (one generator needed) as well as blocking and third order intercept (two generators needed) and started me down this path of high performance receivers.

Dave Fifield offered me a pair of 8640Bs to allow me to the testing required for very high receiver performance. Brian's generators were a start, but the testing of very high performance receivers requires a very clean signal source with extremely low sideband noise and these two generators were not quite good enough. The HP 8640Bs were just what I needed. There is no way of knowing where a design stands without testing. High performance receivers do not happen by accident. Performance must be designed in.

Trevor Jacobs for laying out the NC2030 PC board**.** The single largest difficulty in getting this project kited was getting the PC board laid out. The design has a lot of parts! Trev did an excellent job as evidenced by this kit. Trev also ran the PTO temperature compensation experiments using a home made temperature chamber.

Dean Davis has been managing the web site for Norcal. I appreciate the work he has done in set up the NC2030 page and linking the presentations to the web page. By the time this is finished, he will also probably be tired of proof reading and fine tuning the format of this manual.

Vicki Tayloe my long suffering wife. Thanks for putting up with this project for the last seven years.

NC2030 Kit Crew: I do not know who you are (I know Doug was involved), but my hats off to you!

Finally, big thanks to Doug Hendricks for encouragement and support all through this saga! Without him, this would not have gotten to this point.

Specifications

As measured from current prototypes, some variance in performance is expected from unit to unit.

Receiver

Tuning range: 20m – 14.0 to 14.065 MHz 30m – 10.1 to 10.15 MHz

Curent Drain: ~11.5 ma at 12v. Current drain is lower at higher voltages, higher at lower voltages due to the use of a switching supply converting the input voltage to the required current drain at 3v and 5v.

Supply voltage range: 7 to 15v

Receiver 6 db bandwidth: ~ 350 to 850 Hz. Fixed 400 Hz 3 pole high pass filter (HPF); Fixed 750 Hz 9 pole low pass filter (LPF) plus variable frequency 5 pole SCAF LPF (14 poles total low pass filter).

SCAF audio low pass filter tuning range: ~300 Hz to 900 Hz

Audio limiting: The headphone audio output is diode limited to ~0.28v peak to peak. For full volume conditions, the audio will limit for signals above –95 dbm.

Sideband: LSB using audio phasing techniques.

Opposite sideband rejection: ~ -45 db

MDS receiver sensitivity: -133 dbm (30m) to -135 dbm (20m), measured for a 3db signal rise over the receiver noise floor.

Third order distortion dynamic range (IP3DR): **93 db** at 2 KHz, **108 db** at 10 KHz

Blocking Dynamic Range (BDR): **130 db** at 5 KHz, **142 db** at 20 KHz

Suggested headphone sensitivity: at least 104 dbm minimum sensitivity (106 to 110 is better)

Transmitter

20m: Power Output: ~4w at 12v, ~500 mA current drain; ~5w at 13.8v; ~1.5w at 7v;

30m: Power Output: ~3w at 12v; ~4w at 13.8v

Building the Kit

Things you will need

- 9v battery clip (for temporary power connection for testing)
- Fresh 9v battery (for a low current power source for testing)
- Teflon plumbing tape (for wrapping PTO coil and temporary PTO coil)
- Clear nail polish (“Sally Hansen Diamond Strength” highly recommended for hardness. Source: Ulta)
- McDonald’s straw (for constructing a temporary PTO coil)
- Two part epoxy (for use on PTO coil)
- Thin super glue (as opposed to “thick” super glue). Used for the PTO tuning screw assembly
- Tweezers
- Solder sucker (highly recommended) or solder wick
- Temperature control soldering iron with a fine tip
- Two 8 pin sockets for the AFA and the keyer chip (optional)
- Magnifying headpiece and/or magnifying glass
- Cookie sheet (highly recommended for building on top of in order to catch stray parts)

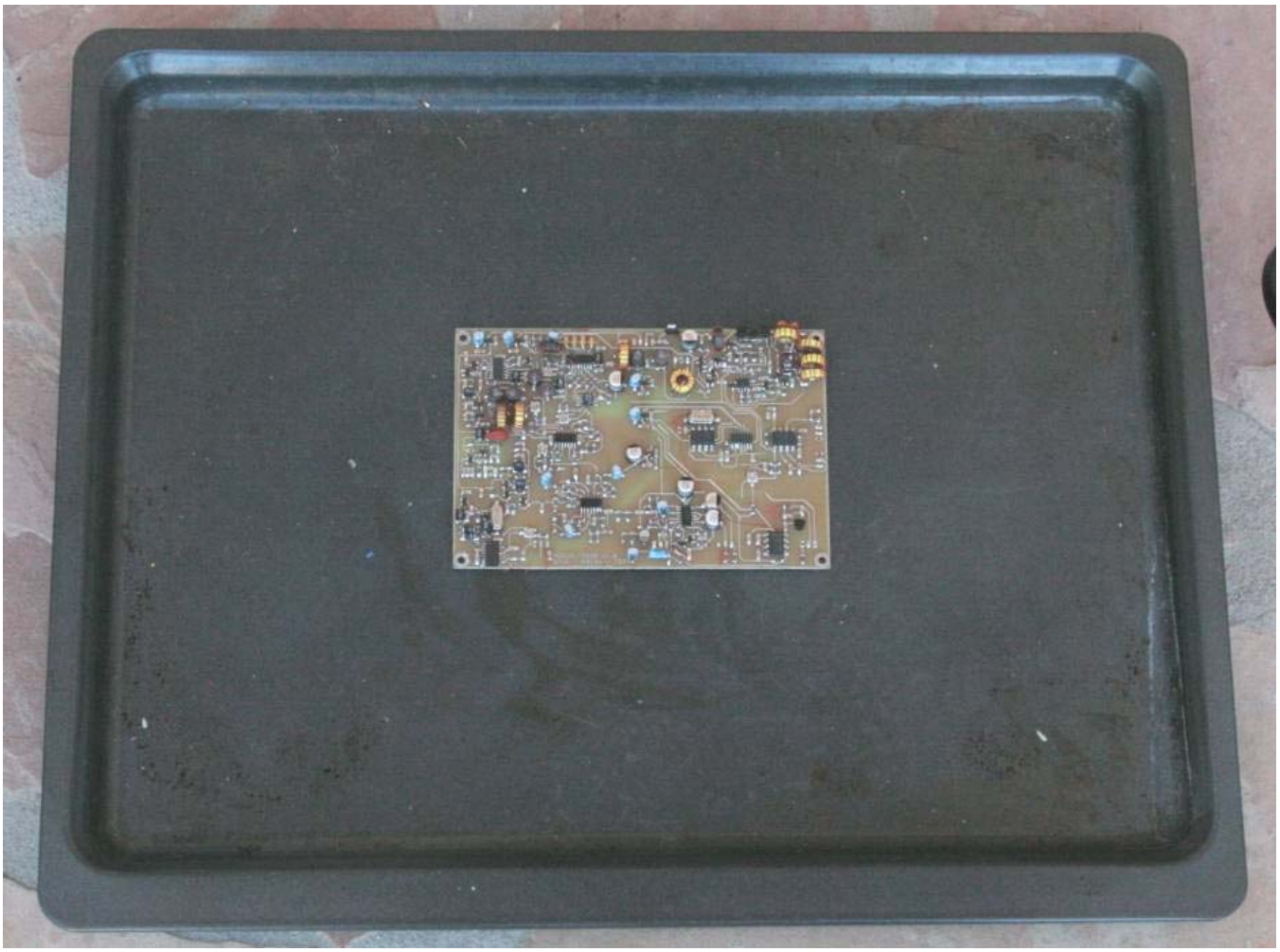

Figure 1. Working over an oversized cookie sheet is highly recommended to catch stray surface mounted parts

Figure 2. A temperature controlled soldering helps a lot. 650 to 700 degrees is recommended.

Figure 3. A very pointed soldering iron tip is a very big help for small surface mounted components

Figure 4. Headband Magnifiers. "Mag-eyes" from JoAnn Fabrics

Parts List

The bags are broken into a series of pockets that contain the surface mounted parts.

Caution! The surface mount part values are not always marked! The bags pockets will be used for parts storage through out the building process.

When you need to access a part, cut a slit into the bag pocket just large enough to access the part. When the parts are in a strip as shown below, peel back the top plastic portion of the strip just enough to dump out one part. When finished, slide the remainder of the strip back into the bag pocket for storage.

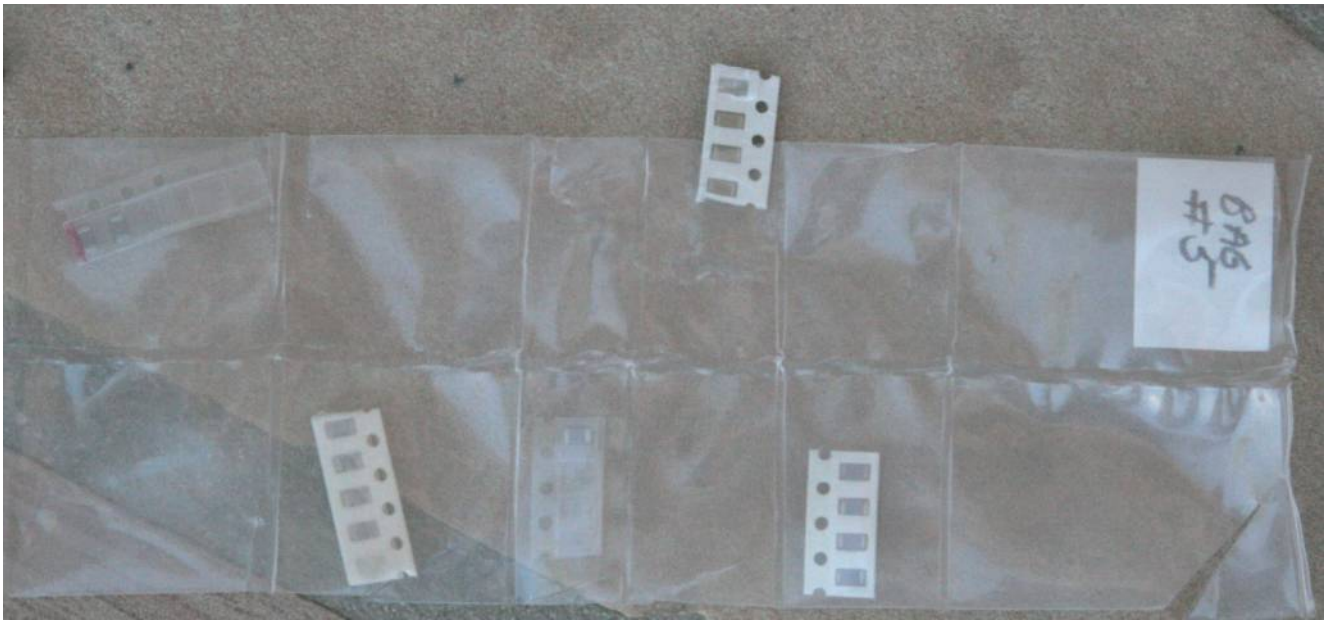

Figure 5. Parts in bag pockets are accessed via slit cut into the packet just larger enough to get the part out.

Figure 6. Close up of a surface mount parts strip and the bag slit just large enough to access the strip.

Below is an example of a bag layout as compared to a real bag. Notice the correspondence of the three single resistor pockets at the top of the real bag compared to the bag layout.

Bag #3 **100K** **1**	**150K** **1**
75K **2**	**1.8K** **1**
7.5K **3**	**22K** **3**
1 Meg **3**	**18K** **2**

Figure 7. A sample bag pocket layout diagram vs. a real bag of parts.

Below are all the bag parts diagram. You will need these diagrams in order to determine where to find which bag and bag pocket in which to find any part that you need. I suggest printing out these bag layouts and keeping them with these bags.

The only bag diagram not shown below is the hardware bag. That bag contains the screws, nuts, jacks, knobs, switches, connectors, wire, solder, etc. needed in the kit.

Power Supply Bag 47uH 3	FT37-77 1
SS14 2	MAX1836 EUT33 1
100uF 5	.1UF 6 + 100 Ohm ¼ Watt 1

Bag #1 .01uF 13	1000pF 7
22uF 13	.1uF 48

Bag #2 2.2K 1	1.5K 3
47uH 2	270 Ohm 3
15K 4	1 Ohm 4
2K 5	100 Ohm 4
1K 11	47K 9

Figure 8. Layout of the power supply and the first three bags

Bag #3 100K 1	150K 1
75K 2	1.8K 1
7.5K 3	22K 3
1 Meg 3	18K 2

Bag #4	Empty
2.7K 1	390 Ohm 3
4.3K 1	5.1K 1
MVAM 109 1	39K 1

Bag #5 50pF Trimcap 4	5K Trimpot 1
.82uF 4	7.5pF 4
470pF 6	50K Trimpot 4
2.2uF 5	330pF 4
33pF 5	5pF 6
47pF 6	180pF 5

Bag #6	68pF 1
LP2985-5 2	39pF 1
22pF 1	22uF 25V 1
15pF 1	220pF 1
.047uF 1	.47uF 1
100pF NPO 2	120pF 2
.22uF 3	150pF 3
100pF 3	27pF 2

Figure 9. Layout of bags # 3 to # 6

Bag #7 SN74CBTLV 3253 1	TS912 1
.15uF 3	DL4007 2
BS170 3	FJV3102R 3
MMBF5486 3	LP2985-2.9 3
BS123 4	TLV2464 3
MMBD4148 9	MMBT2222 4

Bag #8	Empty
CD74HC 4051M 1	LT6231 1
74ACT00 1	SN74CBTD 1G125DVB 1
SL44 1	FDM335 1
BAT545 1	4.000 MHz 1
10K 15	3.3K 14

Bag #9	74AH COOD 1
11.059 MHz 1	MAX7427 1
4.7uH 1	6.8uH 2
1.5uH 1	10uH 1
100uH 3	13.0625 MHz 1
T37-6 8	FT37-43 2

Figure 10. Contents of bags #7 - #9

In addition to the above bags, there are two more bags. One is a bag of wire, and the other is a bag of miscellaneous parts. The contents are listed below:

Misc bag:

1 - 1.25" knob (Main tuning. 1.25" fits per silk screen layout)
4 - 0.75" knobs (Control knobs. 0.75" fits per silk screen layout)
2 - Sub-miniature push buttons plus nuts and lock washers
2 - SPST miniature switches plus nuts and lock washers
2 - headphone jacks plus nuts and lock washers

1 - 100 pf N220 Temperature compensation disc cap
1 - 1N4001 diode

1 - 5K pot plus nut and lock washer (Volume control)
1 - 25K pot with center detent plus nut and lock washer (RIT control)

1 - 50K pot plus nut and lock washer (SCAF Low Pass Filter cutoff control)
1 - 100K pot plus nut and lock washer (CW speed control)

1 - BNC antenna connector plus nut and lock washer
1 - Power connector plus nut and lock washer
1 - Switching supply tin

1 - PTO coil form
1 - Nylon nut for PTO coil form
1 - ¼-20 thin nuts
1 - 2" brass 6-32 screw
1 - 0.5" aluminum spacer threaded for 6-32

6 - 4-40 screws 3/8"
6 - 4-40 nuts with lock washers (used for board standoffs, lock washers give additional height)
6 - 4-40 nuts

Wire bag:

#26 wire - 8 feet
#30 wire - 16 feet
#32 wire - 3 feet
10 conductor ribbon cable
Tube of solder

Status 12-12-05: Two other missing parts are being shipped out, five 100 uf capacitors for the main receiver board and a 30 pf trimmer cap. These are being shipped separately and are not included in the above bags.

Tools and Construction Hints

There are many great articles on the web that describe techniques on building surface mount projects. Alas, I am guilty of often using a bit too much solder. Rather than right my own version of this, let me repeat some of these links:

www.geocities.com/vk3em/smtguide/websmt.html

www.seed-solutions.com/gregordy/Amateur%20Radio/Experimentation/N2PKVNA/SMT.htm

www.piclist.com/techref/smds.htm

In building this transceiver myself and creating the manual, I have had some problems. These fall into four different categories:

1) IC pins not really soldered
2) ICs mounted backwards
3) Resistors and capacitors not soldered to the right set of pads
4) Not all parts were installed

Between testing prototypes and building the final transceiver, I have built five of the NC2030s. Please learn from my mistakes. Each time an IC is mounted, check the mounting polarity twice before soldering it in. I suggest checking the IC polarity, soldering down one corner pin, and then checking it one more time before finishing the job. I think the old saying is “measure twice, cut once”.

I have several times mounted caps and resistors to the wrong set of pads. This problem can be corrected by mounting the resistors first, double checking the resistor placement and values against the pictures, and mounting the capacitors after all the resistors are mounted. The assembly instructions have been modified to reflect this order.

The resistor values can normally be read from the pictures included. “473” is a 47000 ohm resistor, a “271” is a 270 ohm resistor, and a “332” is a 3300 ohm resistor. The last digit is the number of zeros after the first two digits.

I have once been bit by not mounting all the parts. This is pointed out in the LO mixer section. I forgot some frequency selective resonating caps, which caused the LO mixer to have very low output. Please print out each section as you go and check off the parts as they are mounted. The pictures have been made of the 20m version of the transceiver. The 30m version can have a slightly different combination of caps in the frequency sensitive areas of the board.

Lastly, I have had IC pins that look soldered, but are not. This happens when the top of the lead of the part gets soldered, but the solder does not extend to the pad. On my first NC2030, this happened a few times until I figured out a trick to make sure that all pins were properly soldered.

After soldering pins on both sides to firmly anchor the IC, I run a bead of solder down both sides of the IC. All pins are now shorted to each other. Next I heat of sections of that bead with the soldering iron and use the solder sucker to suck away the excess. You have to be fast removing the iron and getting the sucker in place before the solder has a chance to cool, but this seems to work very well. When using the approach, carefully inspect the pins when finished to make sure there is no solder left between the pins. It is not uncommon for a very light solder film to be left which can be cleaned up with either a knife or a very small screw driver blade or a light touch of the soldering iron.

This manual has been set up to build a section, and then test it. The tests are normally quite simple. This should find most problems as we go from stage to stage rather than getting to the end and not knowing where to start.

I found building the transceiver over a large cookie sheet eliminated the problem of dropping parts and loosing them. However, when doing the applied voltage tests, you should place a few sheets of clean paper under the boards to keep them from shorting out against the cookie sheet.

I find that this radio can be built in about three 8 hour days. That is a weekend and a couple of evenings.

This transceiver has a very high performance receiver. I hope some of you can finish the 20m version of this radio before the November CW sweepstakes. Then listen to the contest using your current rig and if possible, compare it with this receiver. In a contest situation, most receivers need the RF preamps turned off and the RF gain reduced in order to cope with the numerous high power signals on the band. In contrast, the NC2030 always operates at full sensitivity. Look for situations that cause your current receiver problems and then, if possible, listen to the same thing on the NC2030. I think you will be pleased in the difference you hear. Pretty good for less than 12 ma of current drain!

Power Supply

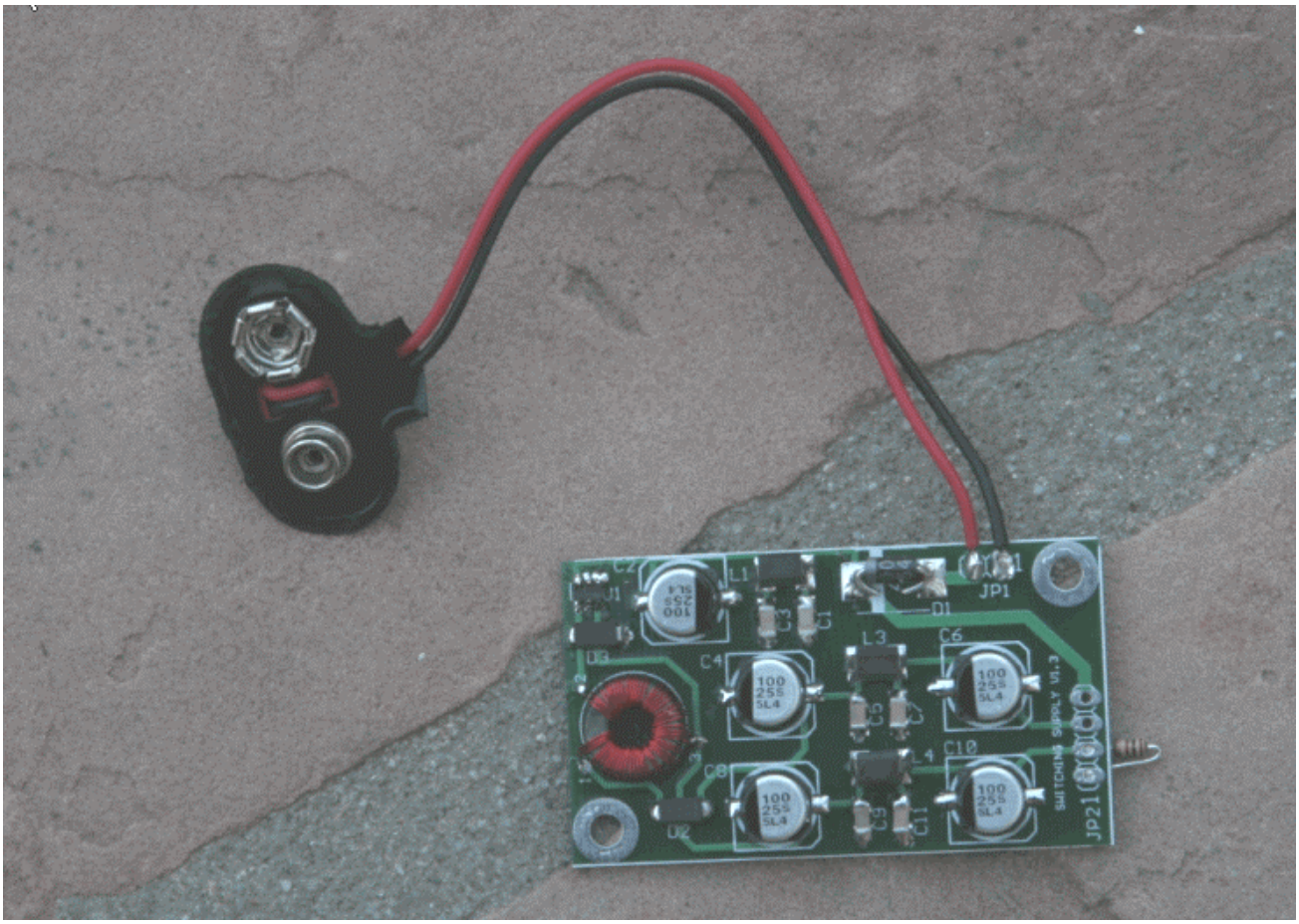

Figure 11. Completed Switching PS with Temporary 9v Power Connection and 100 ohm 3.3v Dummy Load

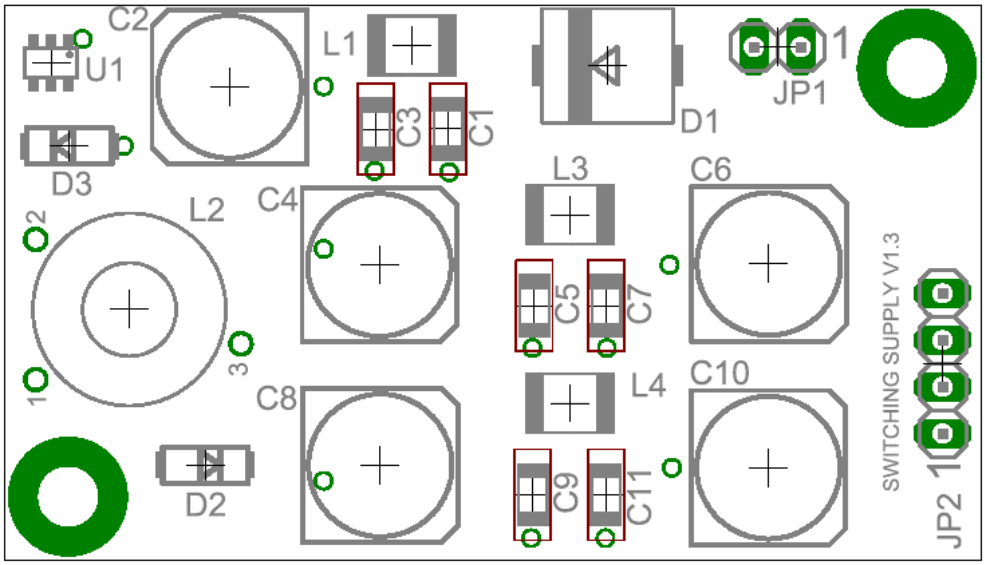

Figure 12. Board layout of the switching power supply.

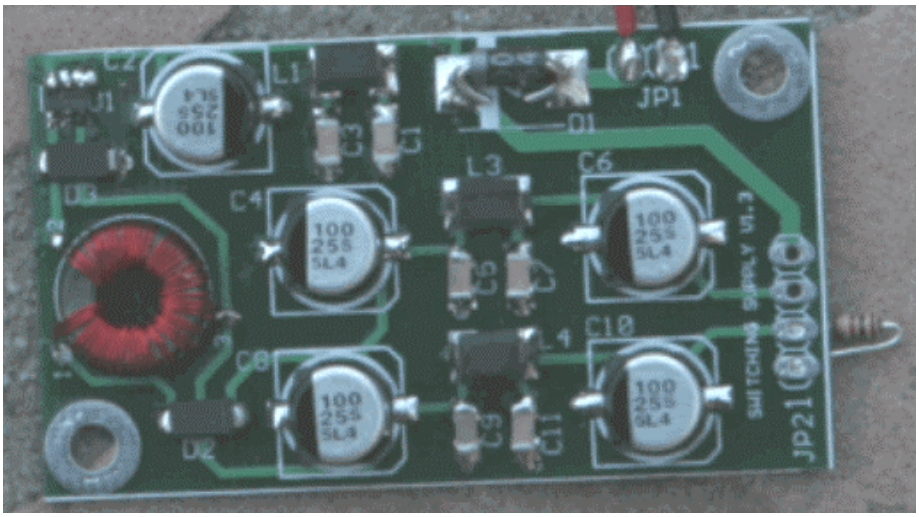

Figure 13. Switching supply built up

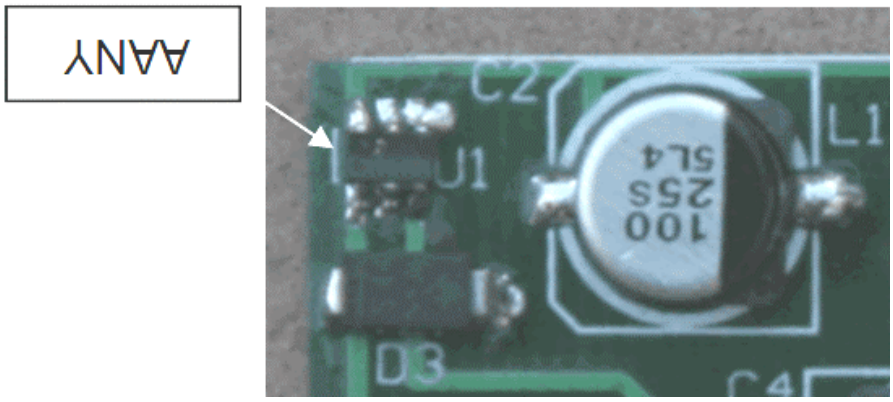

Figure 14. Orientation of U1. Mount with the markings "AANY" upside down as shown.

Install U1 part number MAX1836EUT33 (marked as AANY), which is a 3.3v switching regulator. ***Hint: solder one corner pin, double check IC orientation, triple check the orientation, then solder the rest of the pins. Make sure the IC is installed with the proper orientation!*** It is very difficult to remove this again without ruining the IC! Refer to the diagrams above. Make sure the marking "AANY" (shown on the IC) is mounted in the orientation shown above. ***U1s markings are both small and faint.***

Install C1, C3, C5, C7, C9 and C11, 0.1uf capacitors.

Install L1, L3, and L4, 47 uH inductors.

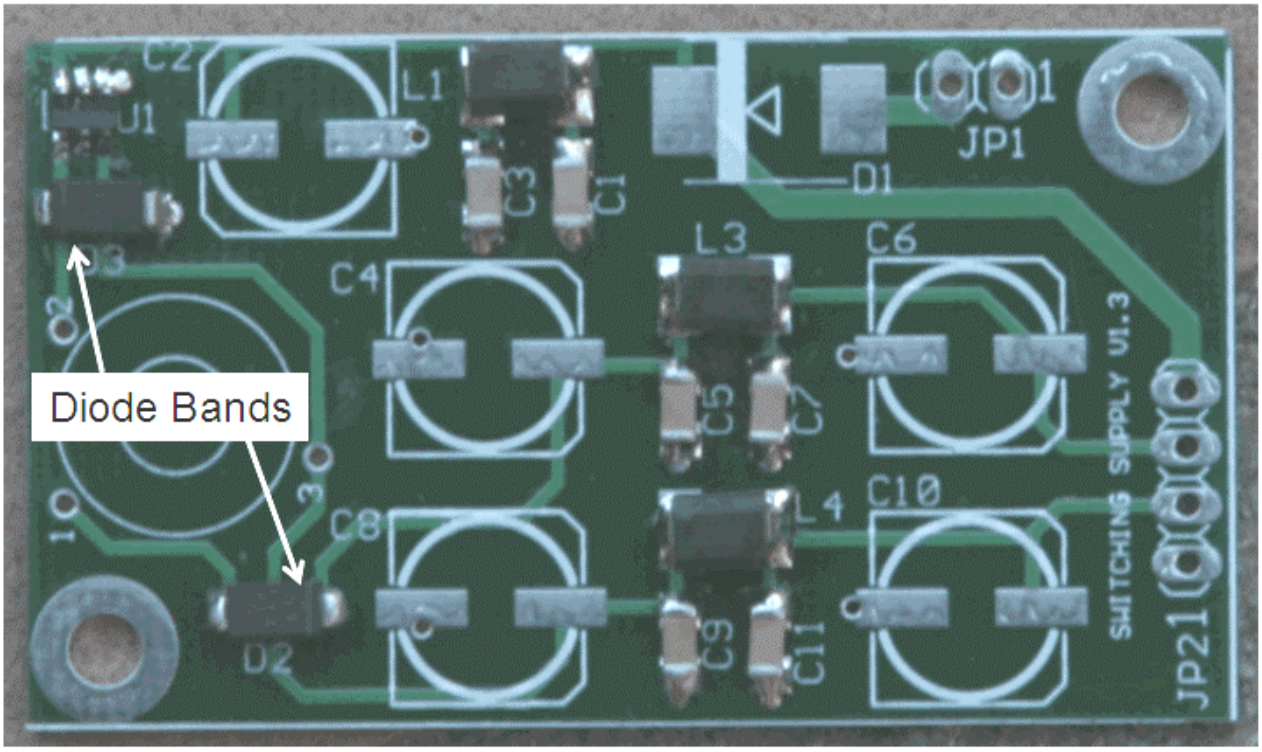

Figure 15. PS with 0.1 Caps, 47 uH inductors, Schottky diodes, and Switching IC

Install D2 and D3, type SS14 Schottky 1A 40V. ***Make sure the diodes are installed with the proper orientation!*** Refer to the diagrams above. The diode band markings are somewhat faintly marked.

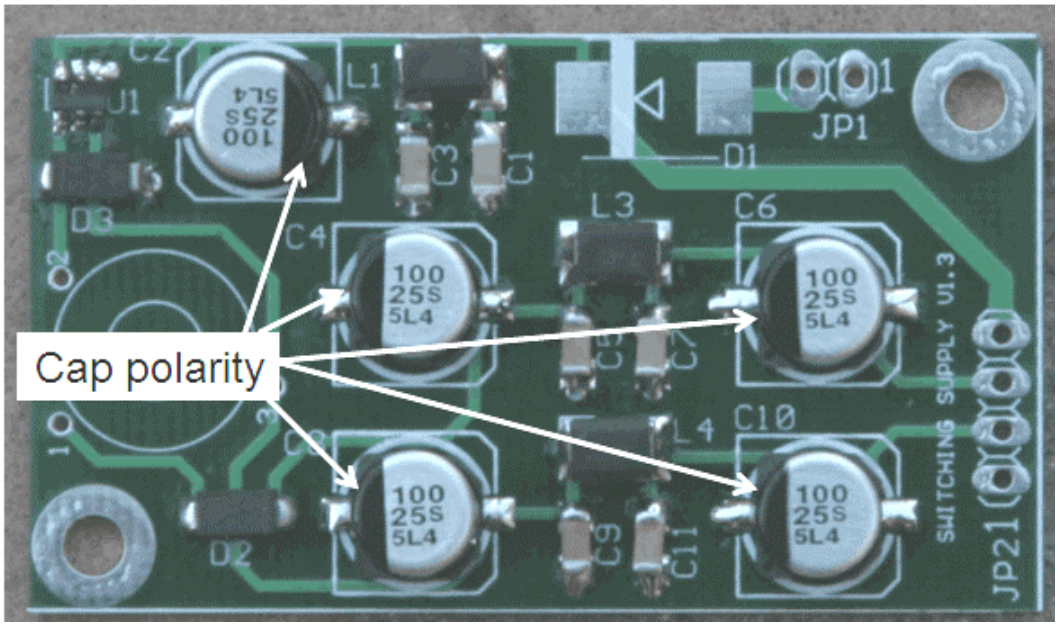

Figure 16. PS and Electrolytic Caps Polarity Details

Install C2, C4, C6, C8, and C10 100uF 25V polarized capacitors. These are polarized capacitors, ***so make sure they are installed with the correct polarization***. The black stripe on the top of the cap matches with the stripe on the outline on the board. Electrolytic caps can be a bit difficult to install. Lightly pre-tin one pad. ***You want a small solder bump.*** Then place the cap on the pads and heat the cap leads until the solder melts. When both pins are soldered, ***gently*** rock the cap to make sure it is completely soldered down.

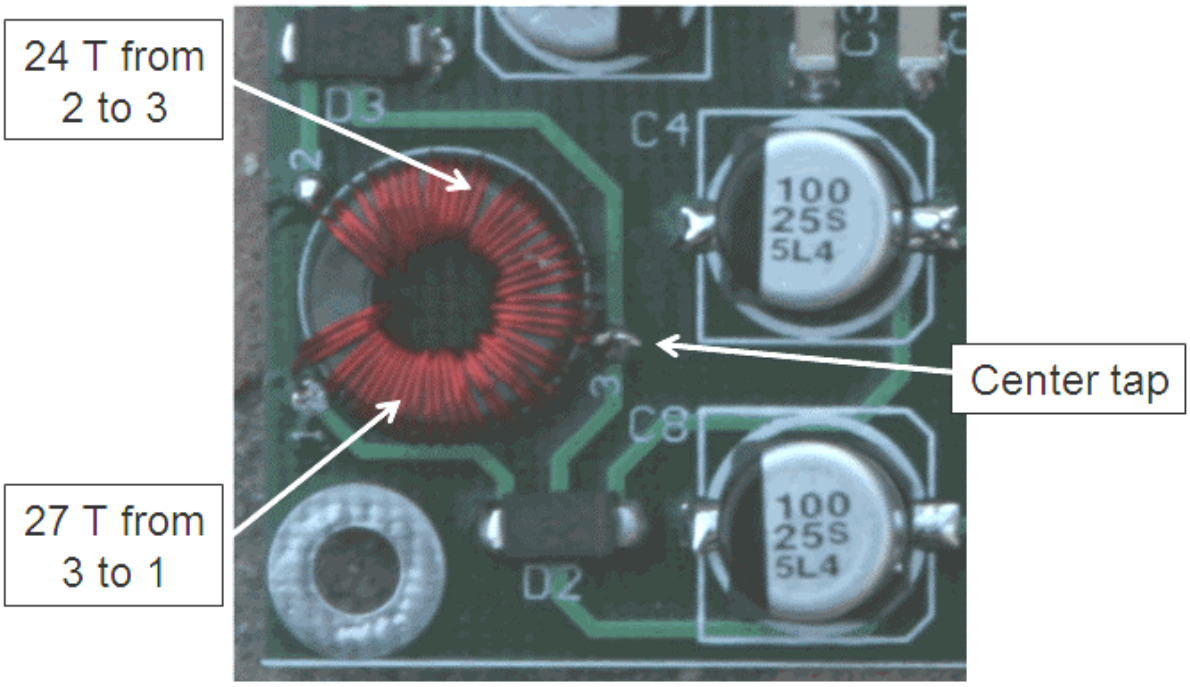

Figure 17. L2 mounting details

Install L2. This inductor is wound on a FT37-77. The FT37-77 is the only core of this type in this kit. This inductor is wound using **51 T (3 ft) of #32** gauge enamel wire. The #32 wire is the smallest gauge wire in the wire bag. ***These turns are wound as close to each other as possible.*** L2 is center tapped at 24 T from one end, 27 T from the other. This tap point connects to terminal #3 of L2. I place a twisted loop at the tap point, then snip off the loop when finished and solder the twisted leads together. The far two ends of L2 connect to terminal 1 and 2. There are 27 T between terminals 1 and 3, while there are 24 T between 2 and 3. Refer to the picture above for additional detail.

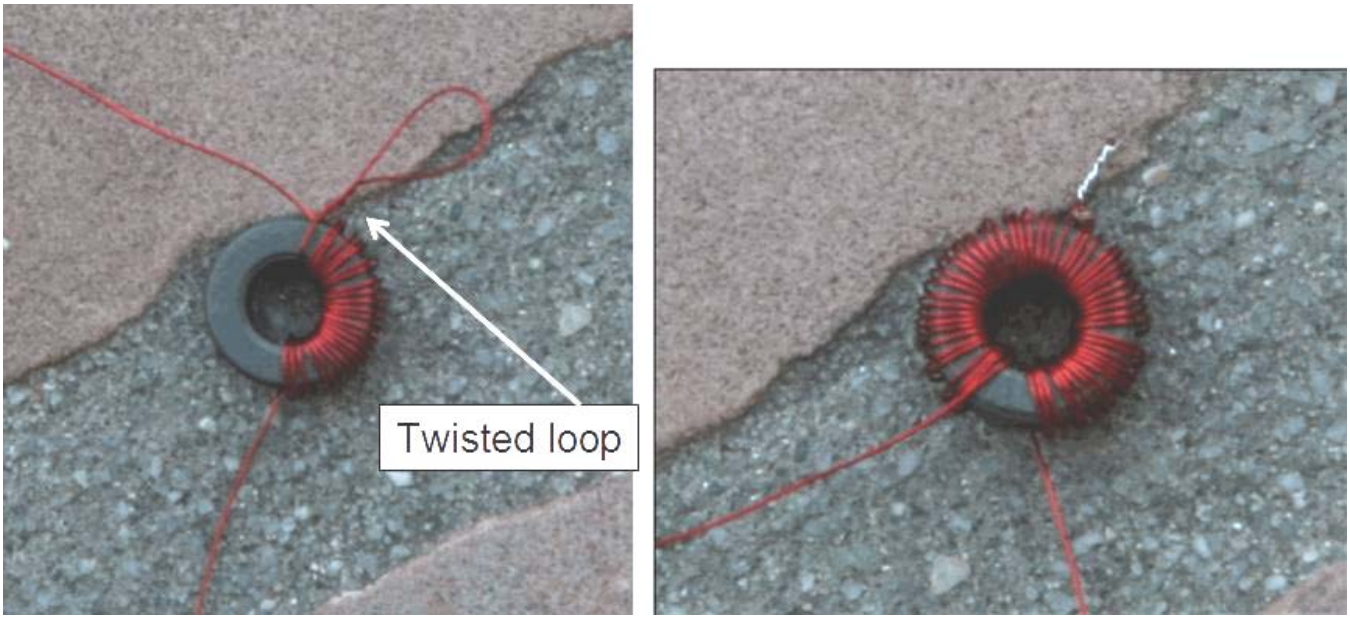

Figure 18. L2 details. After first 24 turns, add a twisted loop for later center tap. Add 27 more turns after this.

The 1N4001 diode is located in the loose hardware bag. Temporarily connect a 100 ohm leaded resistor and 1N4001 diode as show below:

Figure 19. Form 1N4001 Diode as Shown

Figure 20. 100 ohm Temporary 3v Load Resistor Formed as Shown

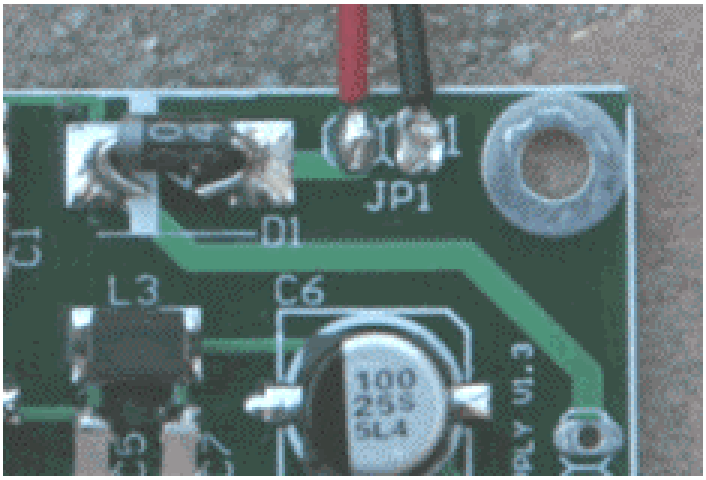

Figure 21. 1N4001 Mounted and 9v Battery Clip Connected

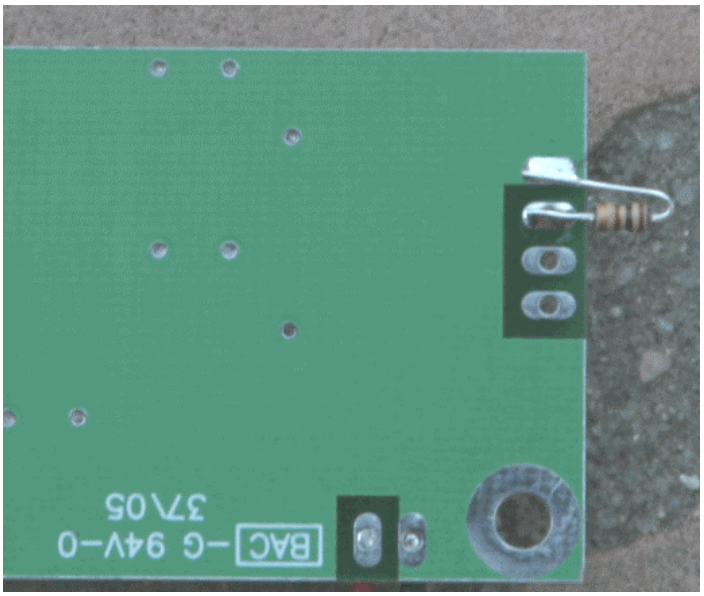

Figure 22. 3v Temporary 100 Ohm Load Resistor Connected to Bottom of Board

The 9v battery clip is not supplied. This is a low current, temporary power connection that is used to protect the board in case of a problem.

The temporary 3v 100 ohm load resistor will stay connected until the main is has enough circuitry to keep the switching supply in regulation.

Switching Regulator Tests

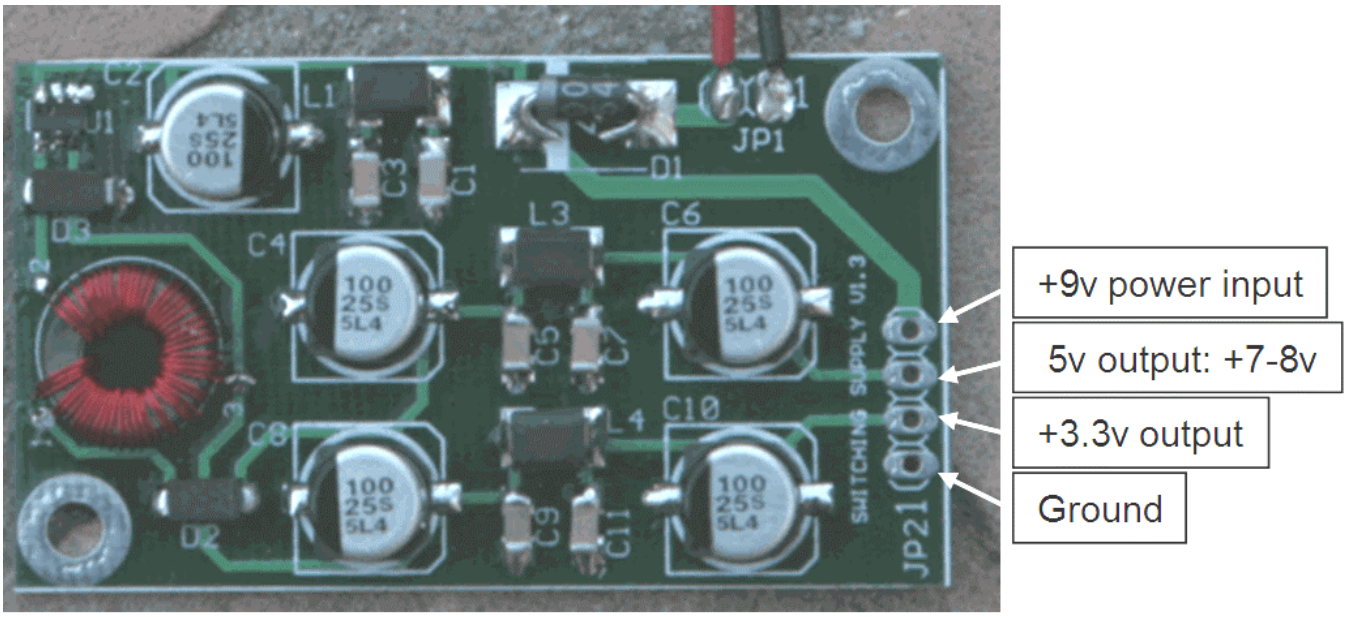

Figure 23. Power Output Connection Details (Load resistor not shown)

Check for 3.1 to 3.3v across the 3.3v output. This will be going to 2.9v regulators that need at least 3.0v to regulate
Check for ~7 to 8v across the 5v output. This is output is very poorly regulated and can go up to 10v. It will drop to 5.5 to 6v when used on transmit. This can be temporarily tested with a 150 ohm resistor.
The drain on the 9v battery should be well under 25 ma.

If the 9v test goes well, connect to 12v and check the current drain for roughly 13 ma.

The 100 ohm resistor, diode and 9v battery are not used in the final kit. ***At this time, remove the 9v battery connection.*** The diode can be left in place, unused, and the 100 ohm resistor will be removed at a later time, after the main circuit board has been populated with enough parts to draw enough current to keep the switching regulator's 3.3v and 5v outputs working properly.

It might be just me, despite the large number of parts (and active components) in the rig, the fact that the load of the receiver can be roughly approximated as a 100 ohm resistor across a 3.3v supply is kind of neat. This is not much more current that it takes to light up a LED to full brightness from a pair of AA batteries. The completed receiver draws about 28 ma from the 3.3v output of the switching supply.

I might also note that after the switching supply is turned on, the current drain will gradually decrease over time, over perhaps a hour's time. This seems to be a function of the electrolyte on the 100 uf caps setting up and stabilizing over time.

Main Board Temporary Power Connections

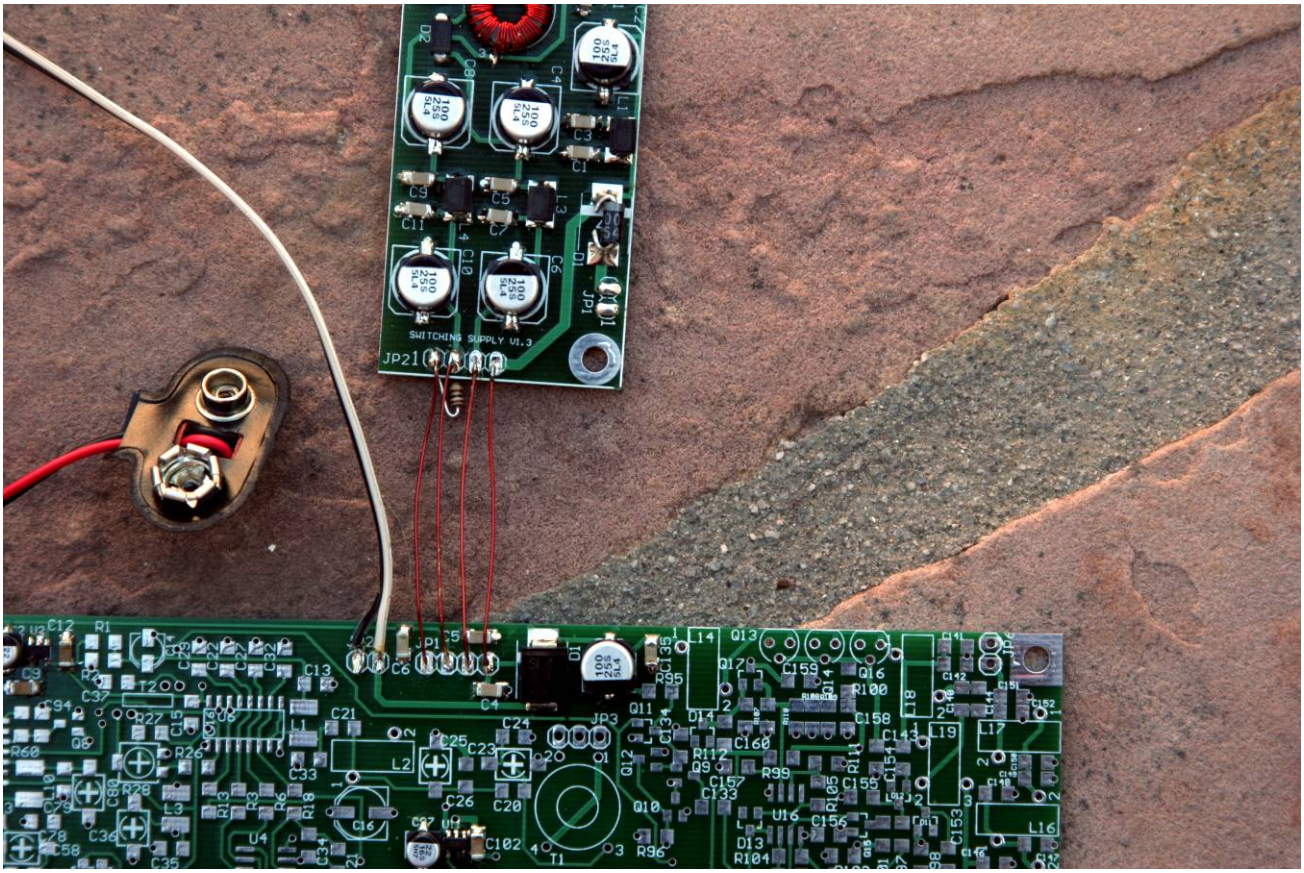

Figure 24. Temporary 9v power connection and connections between switching supply and main board

Here a temporary 9v power connection is made to the main board, and the switching supply is connected using four short #26 gauge wires. The 9v battery clip has extra wire added to it (white = +9v, black = ground) in order to get the 9v battery further away from the main transceiver board.

Install the following parts in the following order:

- Attach the temporary power connection for the 9v battery clip as shown below. White = +9v, black = ground.

- Attach four 2” #26 gauge wires between the switching supply and the main receiver board. Details shown below.

- Install D1 part number SL44. Pre-tin leads for D1. It does not seem to take solder very readily.

- Install C4, C5, C6, C135 0.1 uf

- Install C136, 100 uf capacitor. Double check the black stripe polarity as shown below.

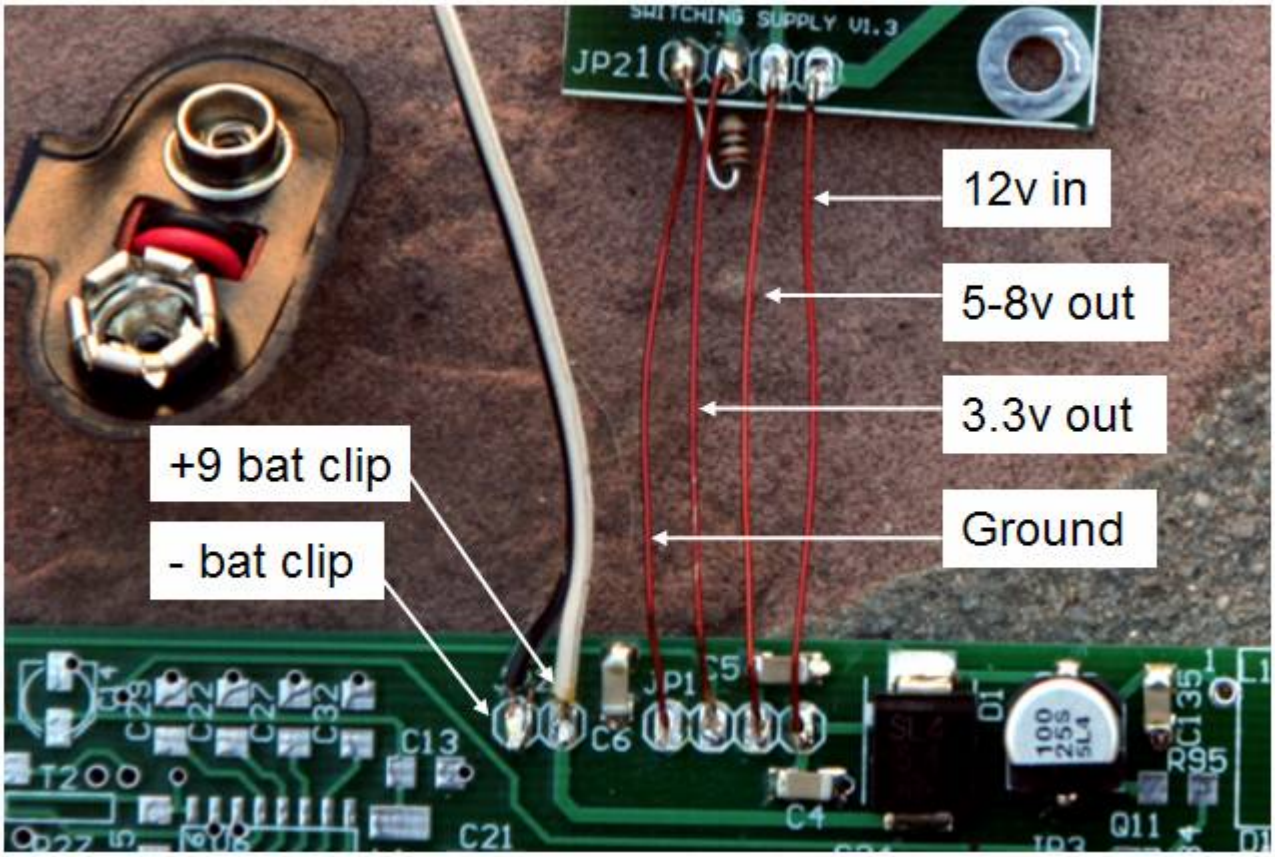

Figure 25. Close up of power connections on the main board and switching supply, bypass caps, and polarity diode

Main Board 3v and 5v Regulators

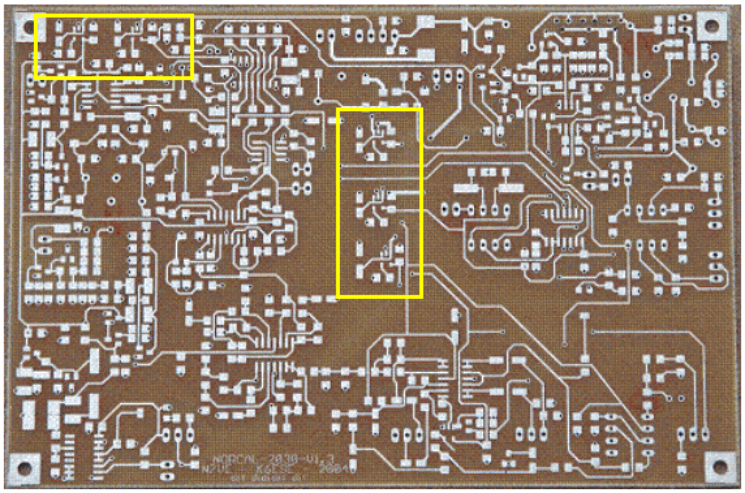

Figure 26. Location of the two 3v and 5v regulator sections

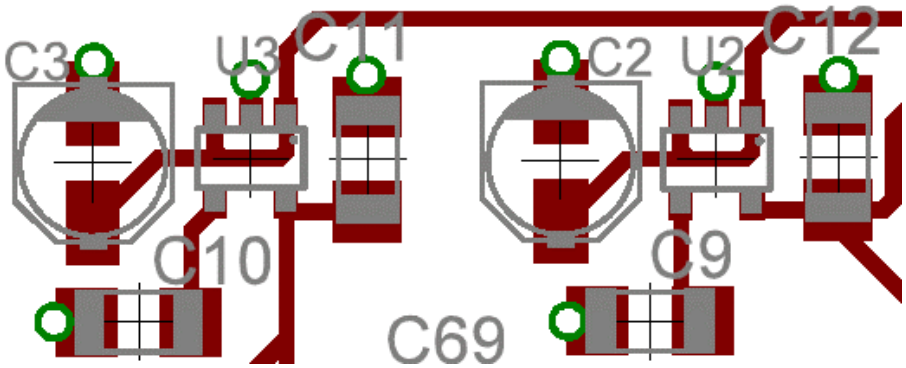

Figure 27. Close up of first two 3v LDO regulators

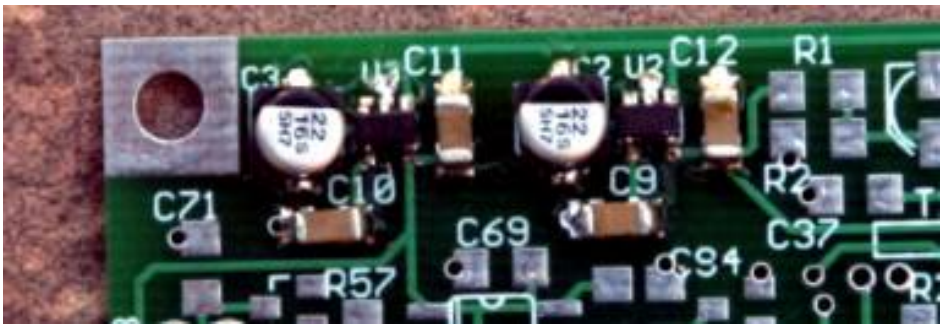

Figure 28. Parts layout of first two 2.9v LDO regulators. Note the black band orientation of the electrolytic caps.

Install U2 and U3, part number LP2985-2.9 (**marked LAXB**), which are 2.9v low dropout (LDO) voltage regulators. ICs can be difficult to tell if all the pins are properly soldered down. Refer to the earlier hints on installing ICs.

Install C9, and C10, 0.01uf capacitors.

Install C11 and C12, 2.2uF capacitors.

Install C2 and C3, 22uF 16V polarized capacitors. These are polarized capacitors, ***so make sure they are installed with the correct polarization***. The black stripe on the top of the cap matches with the stripe on the outline on the board. Electrolytic caps can be a bit difficult to install. Pre-tin both pads. Then place the cap on the pads and heat the cap leads until the solder melts. When both pins are soldered, ***gently*** rock the cap to make sure it is completely soldered down.

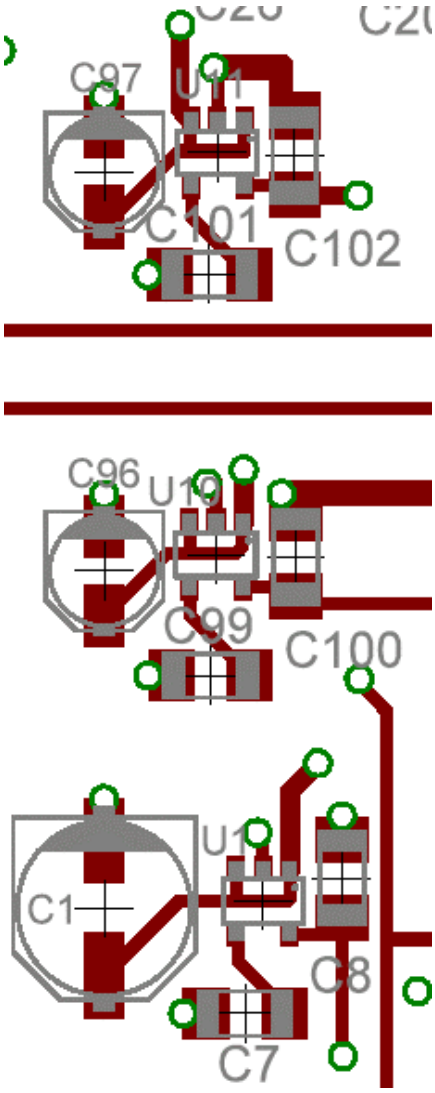

Figure 29. Location of the one 3v and two 5v LDO regulator sections

This is the second set of LDO voltage regulators that need to be installed

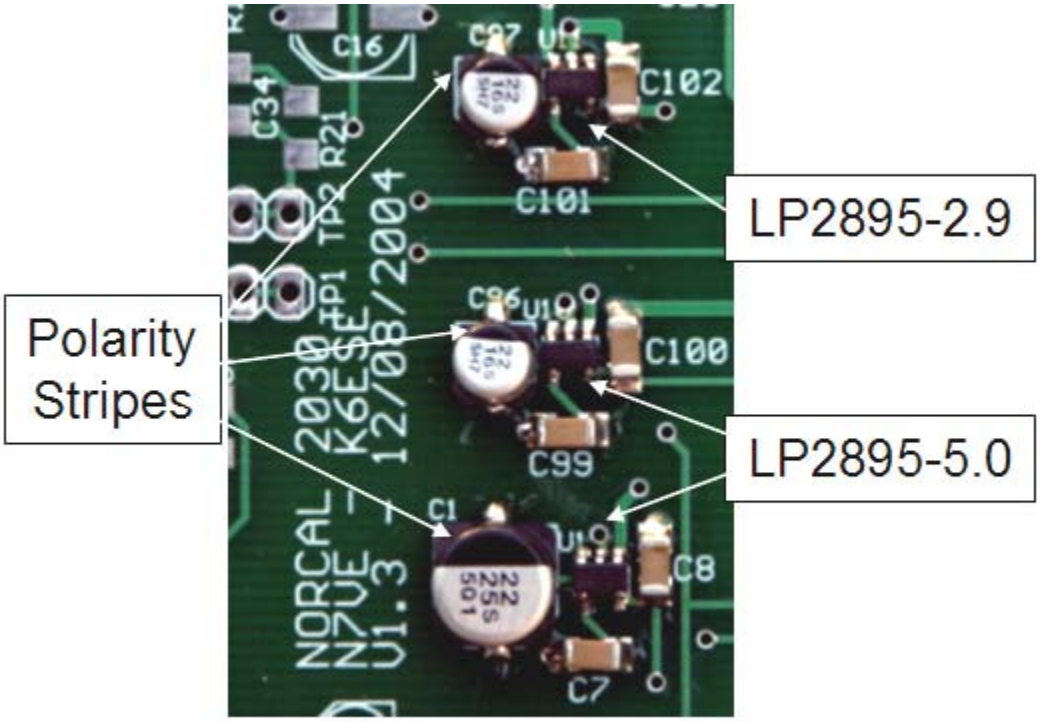

Figure 30. Installed parts for this section of LDO regulators. Note the black band orientation on the electrolytic caps.

Install U11 part number LP2985-2.9 (**marked LAXB**), the top most voltage regulator, which is a 2.9v low dropout (LDO) voltage regulator. ICs can be difficult to tell if all the pins are properly soldered down. Refer to the earlier hints on installing ICs.

Install U1 and U10, part number LP2985-5 (**marked LOUB**), which are 5v low dropout (LDO) voltage regulators. These two regulators are the middle and bottom set of regulators. ICs can be difficult to tell if all the pins are properly soldered down. Refer to the earlier hints on installing ICs.

Install C7, C99 and C101, 0.01uf capacitors.

Install C8, C100 and C102, 2.2uF X7R capacitors.

Install C96 and C97, 22uF ***16V*** polarized capacitors. There are both 16v and 25v 22uf caps. ***Make sure to use the 16v parts***. These are polarized capacitors, ***so make sure they are installed with the correct polarization***. The black stripe on the top of the cap matches with the stripe on the outline on the board. Electrolytic caps can be a bit difficult to install. Pre-tin both pads. Then place the cap on the pads and heat the cap leads until the solder melts. When both pins are soldered, ***gently*** rock the cap to make sure it is completely soldered down.

Install C1, a 22uF ***25V*** polarized capacitors. This 25v cap is physically large compared to the smaller caps used above at C96 and C97. Make sure you use the right ***25v*** cap. These are polarized capacitors, ***so make sure they are installed with the correct polarization***.

3v and 5v LDO Regulator Tests

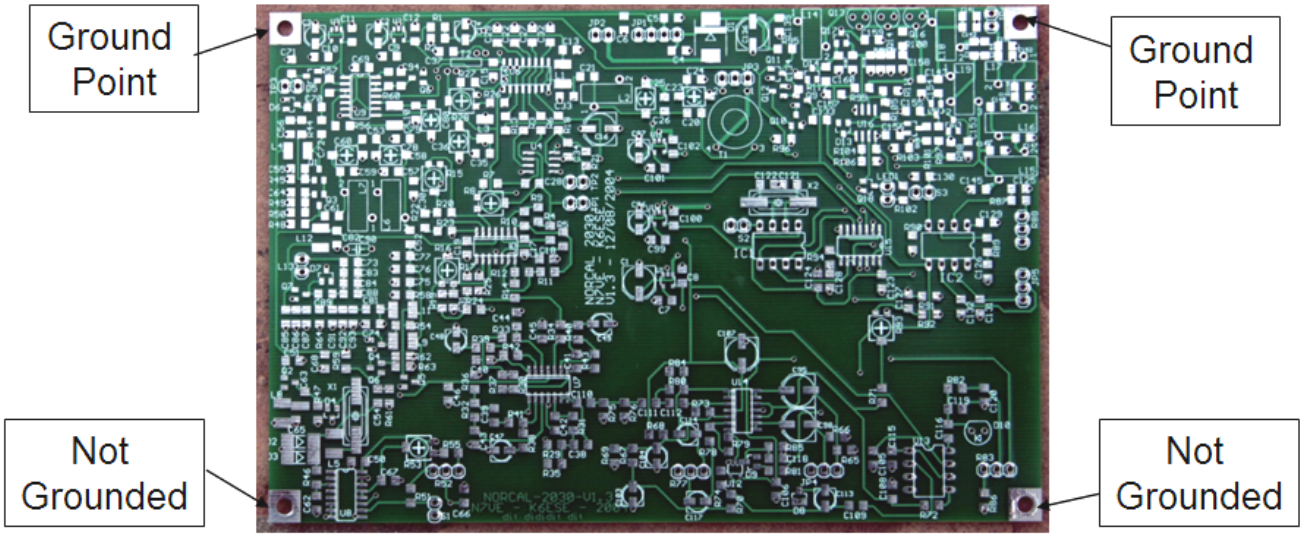

Figure 31. Ground reference for voltage measurements are upper 2 corners, the lower 2 are not connected

When connected, measure the voltage across the battery. It should be at least 7 to 9v.

Measure the voltage at the switching supply 3.3v output. It should be between 3.1 to 3.3v. See figure 15 above.

Measure the voltage across C11 on the first set of regulators installed. The voltage should measure 2.9v. The LDO regulator needs at least 0.15v difference from the input (3.3v) to the output (2.9v) in order to properly regulate.

Measure the voltage across C12 on the first set of regulators installed. The voltage should measure 2.9v. The LDO regulator needs at least 0.15v difference from the input (3.3v) to the output (2.9v) in order to properly regulate.

Measure the voltage across C102 on the second set of regulators installed. The voltage should measure 2.9v. The LDO regulator needs at least 0.15v difference from the input (3.3v) to the output (2.9v) in order to properly regulate.

Measure the voltage across C1 on the second set of regulators installed. This gives the input voltage to one of the two 5v regulators. The voltage should measure the same as the battery voltage measured above, roughly 9v.

Measure the voltage across C8 on the second set of regulators installed. This is the output of one of the 5v regulators. The voltage should measure 5v.

Measure the voltage across C96 on the second set of regulators installed. This gives the input voltage to the second of the two 5v regulators. The voltage should measure somewhere in the 7v range. This 7v is the no load voltage from the switching supply and drops down to 5.5v under a transmit load.

Measure the voltage across C100 on the second set of regulators installed. This is the output of the second the 5v regulator. The voltage should measure 5v.

If the above voltage readings are correct, move on to the next section.

If some regulators read zero volts output, the most likely problem is that the pins on the regulators are not soldered correctly (not soldered or shorted to an adjacent pin). Examine these pins closely. These are very simple (but small) linear regulators!

Disconnect the 9v battery supply.

HPF, Audio Amp, Mute, Audio Limiter and Headphone Drivers

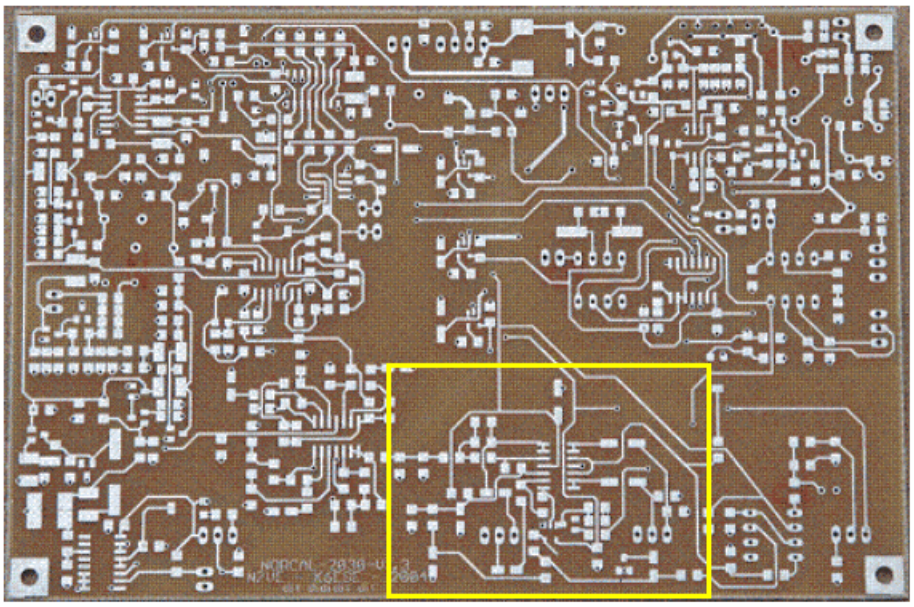

Figure 32. SCAF, HPF, Audio Amp, and Headphone driver section of the board

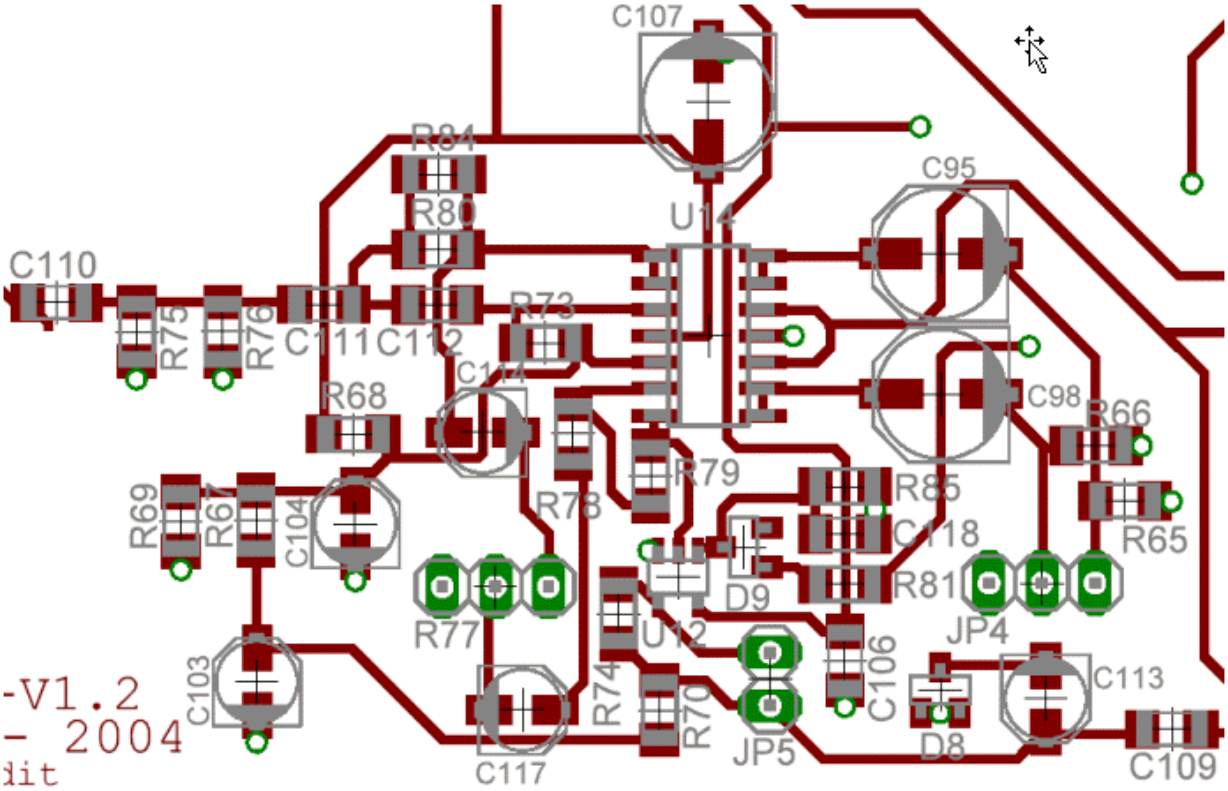

Figure 33. HPF, Audio Amp, Headphone Drivers portion

U14 is installed first (TLV2464). Make very, very sure it gets installed such that the stripe on the one end is on the upper end of the IC. Below is a visual of the installed IC. ***After tacking down one pin in one corner, make sure to double check the IC orientation before continuing!***

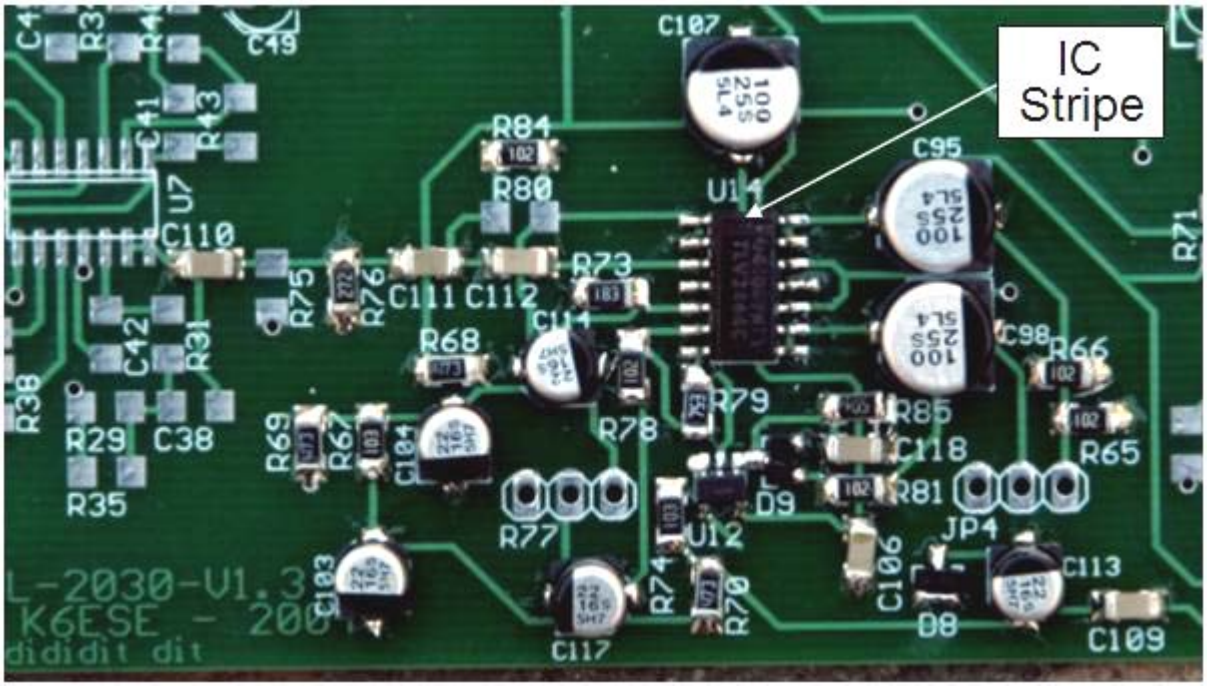

Figure 34. Picture shows orientation of U11 with stripe on upper end.

Now install the following parts in the following order:

U12 - **SN74CBTD1G125DVB** SOT23-5 (Audio Mute Gate).
D8 - **BAT54S** (Dual Schottky Diode – Audio limiter)
D9 - **MMBD4148**

Make sure to double check resistor placement on the board against the figure above. Some pad orientations can be confusing.

R65 R66 R78 R81 R84 - **1K**
R76 - **2.7K**
R67 R74 - **10K**
R73 - **18K**
R68 R69 R70 - **47K**
R79 - **75K**
R85 - **1M**
R75, R80 not used

C106 C109 C110 C111 C112 C118 - **0.1uf**
C103 C104 C113 C114 C117 - **22uf** ***Double check polarity!***
C95 C98 C107 - **100uf** ***Double check polarity!***

Audio Section Partial Tests

Apply the 9v battery voltage. Check voltage across C107 to makes sure it has 2.9v.

Check the voltage across C111 for ~ 1.5v. This should be biased to half of the 2.9v supply voltage.

Check the voltage from either end of R78 to ground. It should also be ~ 1.5v.

Disconnect the 9v battery supply.

This section will be tested further after the SCAF and CW Keyer sections are finished.

SCAF Variable Low Pass Filter

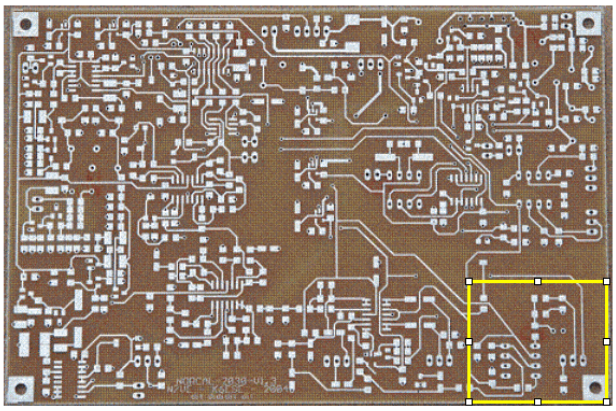

Figure 35. General location of the SCAF circuit

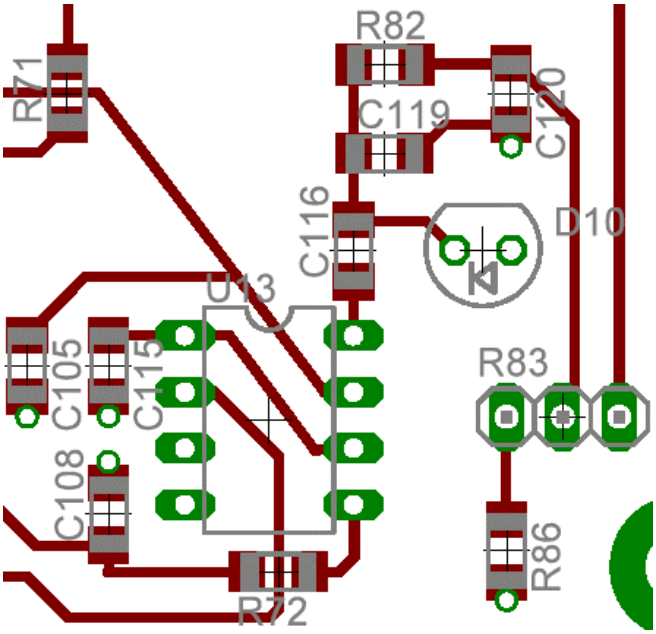

Figure 36. Close up component view of the SCAF section of the board.

Important Note! U13 is ***very*** static sensitive! Handle with care! It should be ***installed last*** as listed in the order of installation below. ***Again, U13 is installed last in this section!***

Double check parts orientation with the picture below! Install in the following order:

R72 - **1K**
R71 R86 - **10K**
R82 - **47K**

C119 - **47 pf**
C105 C108 C115 C116 C120 - **0.1uF**

D10 - **MVAM109** ***– Make sure the flat side of the diode matches that shown in the picture below!***

U13 Mounted Last:

U13 - MAX7427CPA – The orientation of this part is shown as mounted below. ***Double check the IC orientation***. Do not install it backwards!

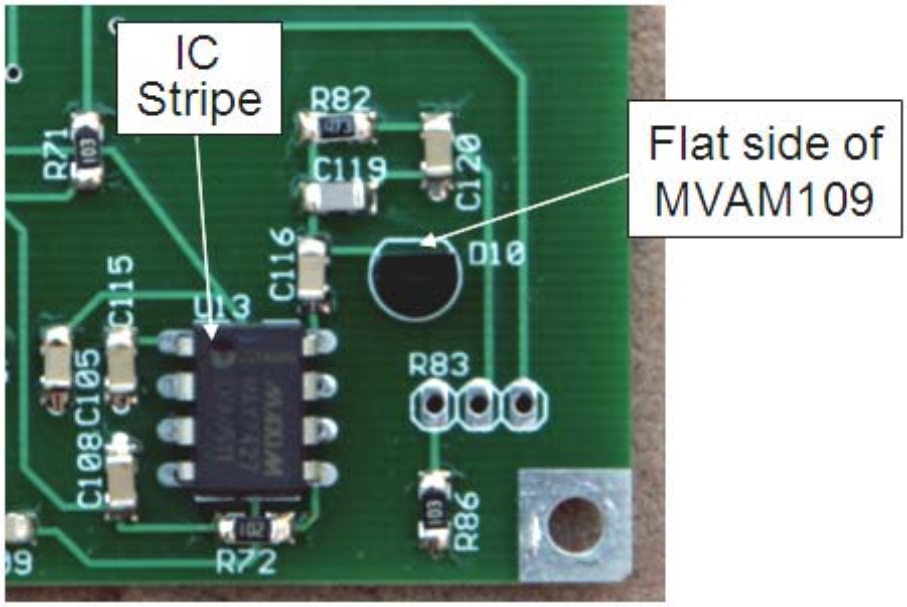

Figure 37. U13 and D10 mounted. IC notch and D10 flat side in the vertical direction.

SCAF and Additional Audio Section Tests

Apply the 9v battery voltage. Check voltage across C105 to makes sure it has 2.9v.

Check the voltage across C108 for ~ 1.4v. This should be biased to roughly half of the 2.9v supply voltage.

Check the voltage across C95 for ~ 1.4v. This is a large 100 uf cap in the previous audio section.

Check the voltage across C98 for ~ 1.4v, a large 100 uf cap in the previous audio section.

Disconnect the 9v battery supply.

CW Keyer

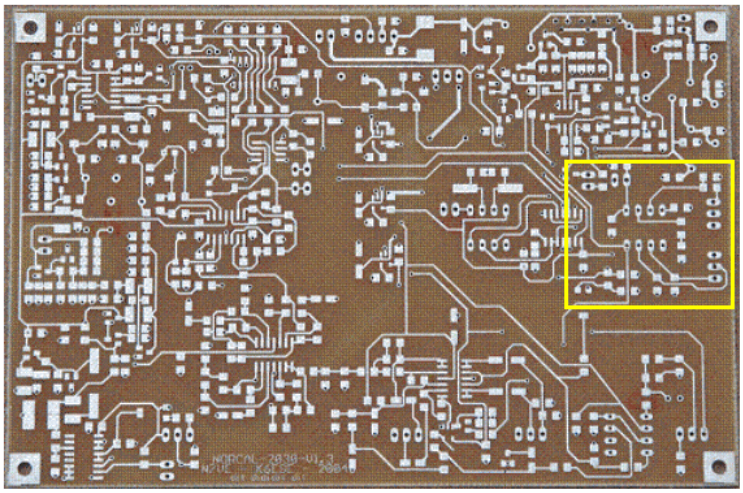

Figure 38. Location of the CW Keyer section of the board

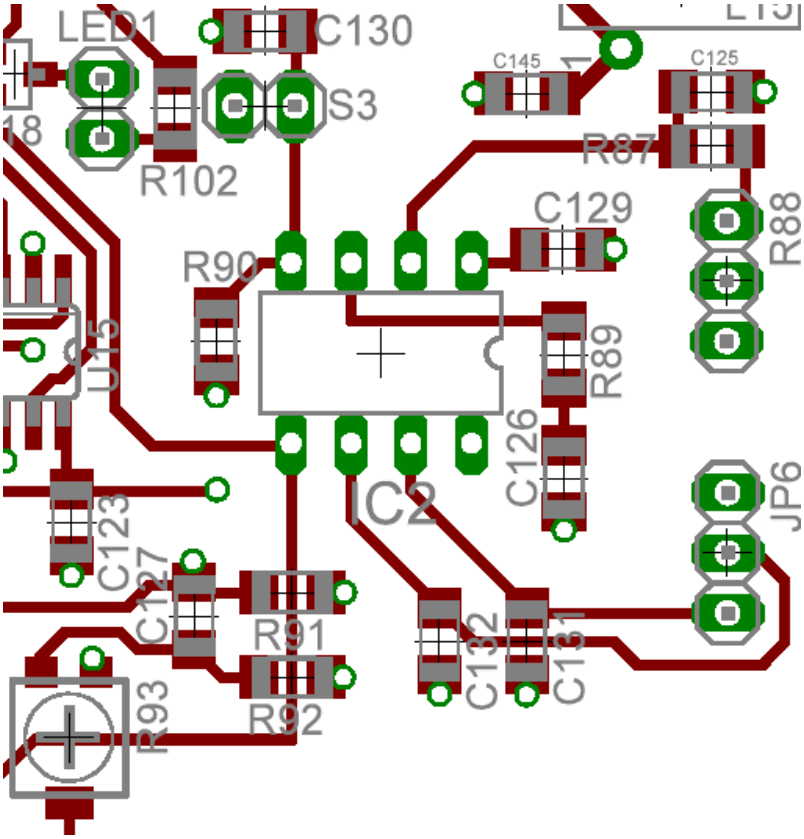

Figure 39. Close up of the CW Keyer section.

Note: ***The use of a socket for the keyer chip is optional, but strongly recommended to allow the possibility of a keyer chip upgrade.***

Double check parts orientation with the picture below! Install the components in the following order:

If an optional 8 pin socket is used for IC2, the keyer chip, install it now. ***Make sure the socket notch orientation matches with the notch outline on the board.***

R102 - **270** (not really part of the CW Keyer, but might as well get it out of the way)
R87 R89 - **1K**
R91 R92 - **2.2K**
R90 - **10K**
R93 - **50K small trimmer pot**

C125 C130 C131 C132 - **0.01uF**
C126 C127 C129 - **0.1uF**

IC2 - 8 pin dip – 12F629 - **Norcal Keyer Chip** – ***Make sure the chip is installed with the correct IC orientation!*** The correct IC orientation is shown below:

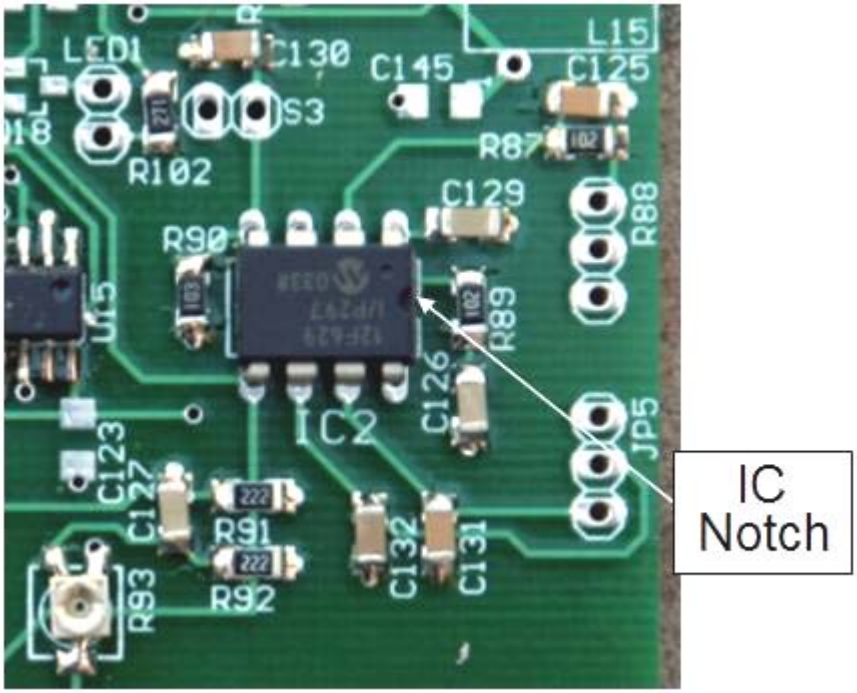

Figure 40. Picture showing correct orientation of Norcal Keyer Chip (optional socket not shown)

Audio Frequency Annunciator

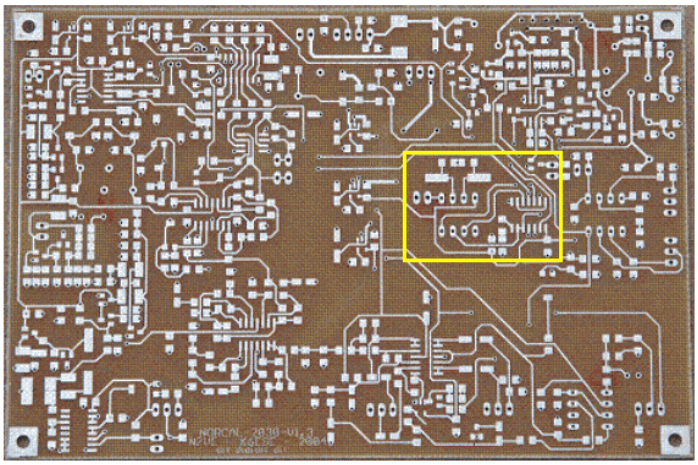

Figure 41. General Location of AFA circuit

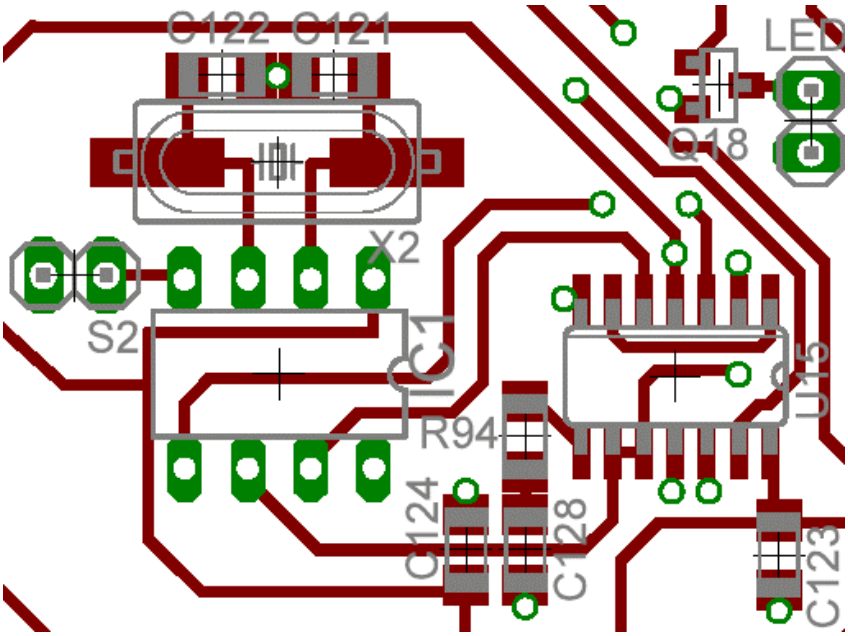

Figure 42. Close up view of the AFA section

Order of installation:

If an optional 8 pin socket is used for the SSS chip, install it now. ***Make sure the socket notch orientation matches with the notch outline on the board.***

U15 - **74ACT00** - ***Caution! Make sure the orientation is correct for this part!*** Correct orientation of the installed IC is shown below. ***Solder one pin, double check orientation, then solder the rest of the pins***

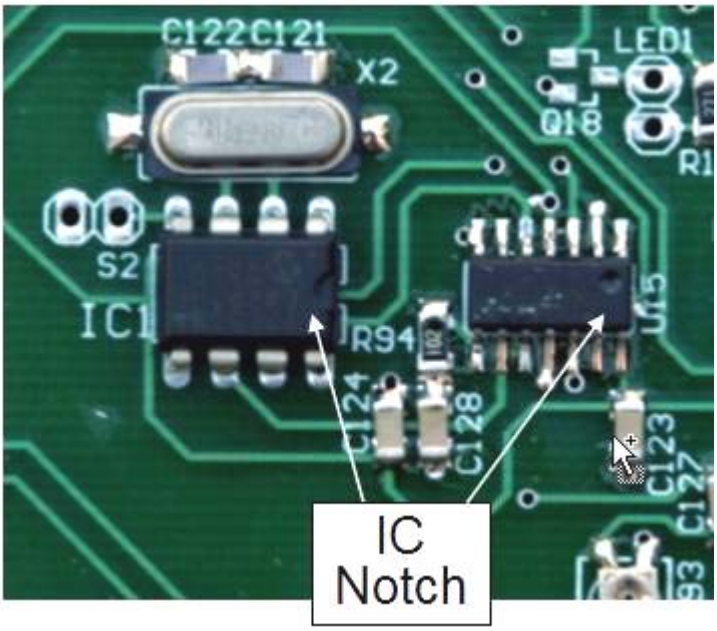

Figure 43. Correct orientation of both the 8 pin 12C508 AFA chip and 14 pin 74ACT00 ICs.

R94 - **1K**
Q18 - **FJV3102R** digital transistor – not shown installed above.
C121 C122 - **33pF**
C123 C124 C128 - **0.1uF**
X2 - **4MHz Crystal**

IC1 - 8 pin dip – 12c508 - **SSS AFA chip** - ***Caution! Make sure the orientation is correct for this part!*** Correct orientation of the installed IC is shown above. ***Solder one pin, double check orientation, then solder the rest of the pins***

Adding external controls for functionality tests

Take the ribbon cable supplied and strip out the following two and three wire combinations

- Black and White
- Violet and Grey
- Brown, Red, and Orange
- Yellow, Green, and Blue

CW button – Black & White 4” length – S3
AFA button – Black & White 4” length – S2

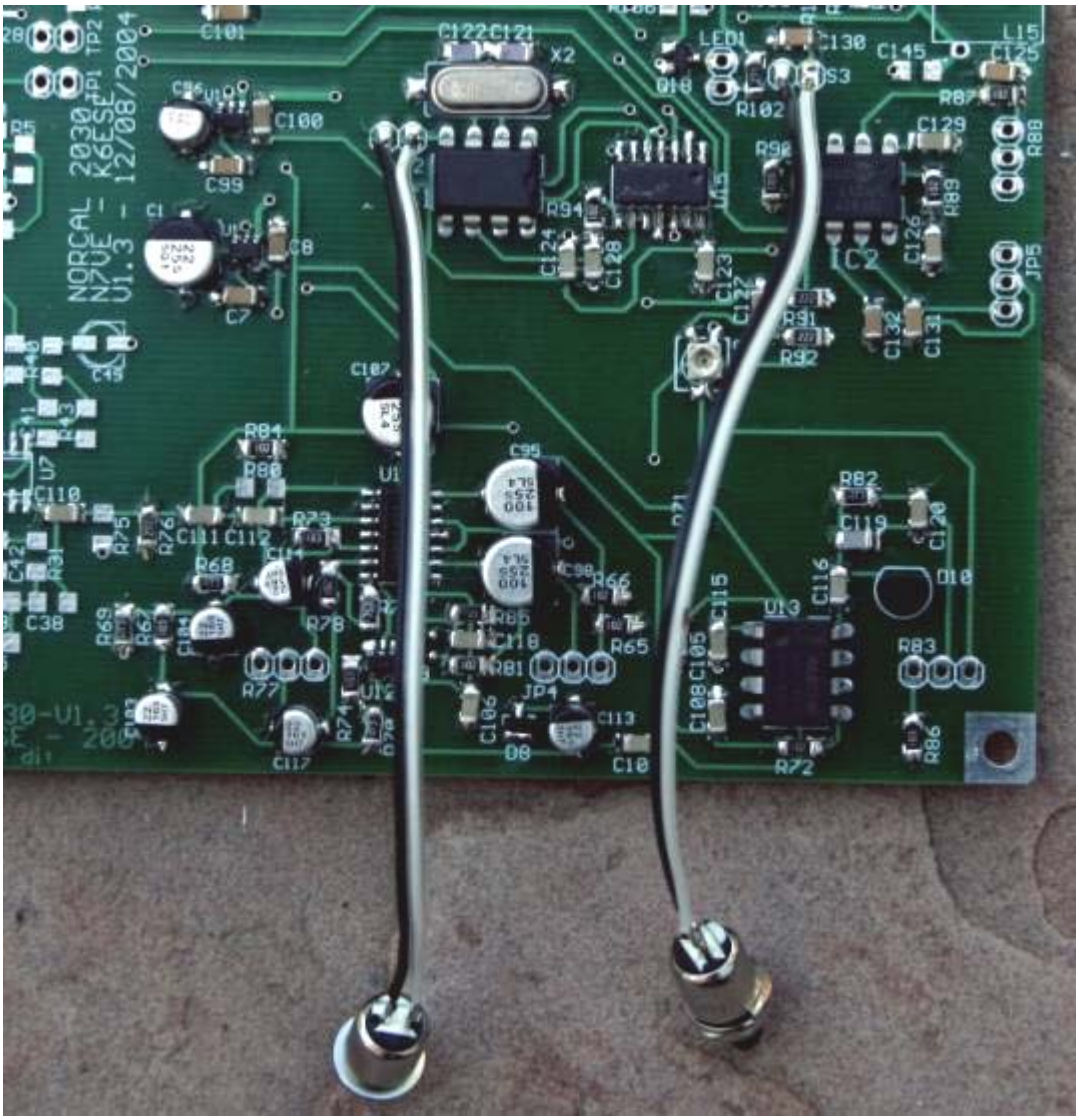

Figure 44. Connect buttons keyer and AFA buttons S2 and S3 as shown

CW Speed – 100K pot – Black &White 5.5” length – R88

Figure 45. Prepare R88 100K Cw speed pot as shown. The left and middle terminals are connected to the white lead

Figure 46. Connect R88 CW speed pot to the R88 pads as shown. Keep black and white in order shown.

Paddle Jack – Brown, Red, Orange – 4” length – JP5

Figure 47. Use Brown/Red/Orange wire and connect up the paddle jack in the color order shown.

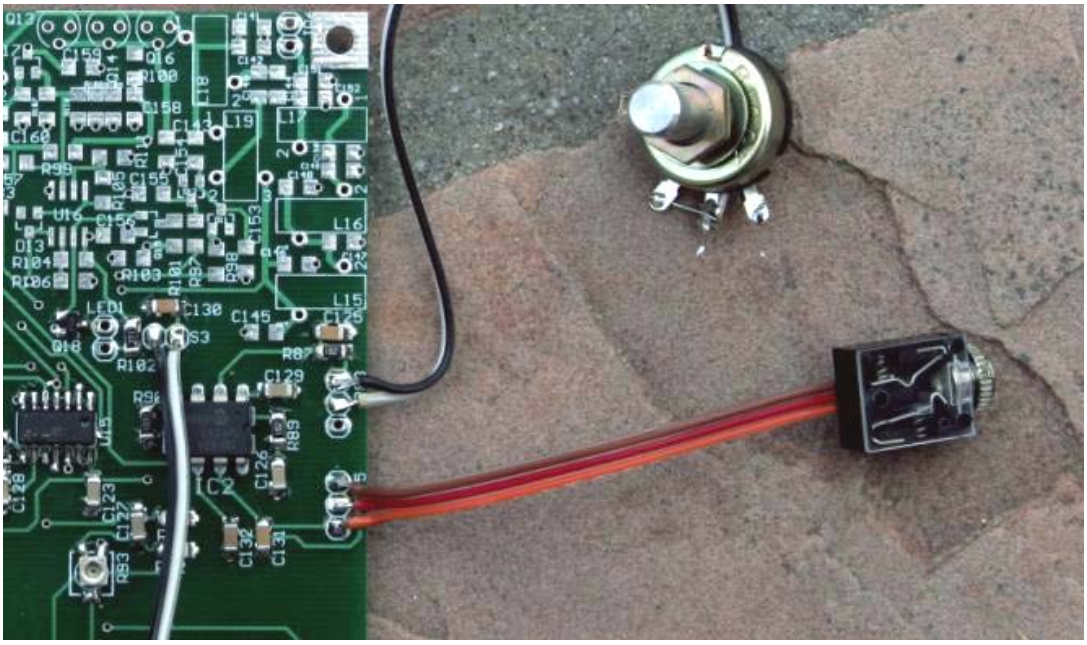

Figure 48. Attach paddle jack to JP5 using the color order shown

Headphone Jack – Brown, Red, Orange – 4” length – JP4

Figure 49. Use Brown/Red/Orange wire and connect up the headphone jack in the color order shown

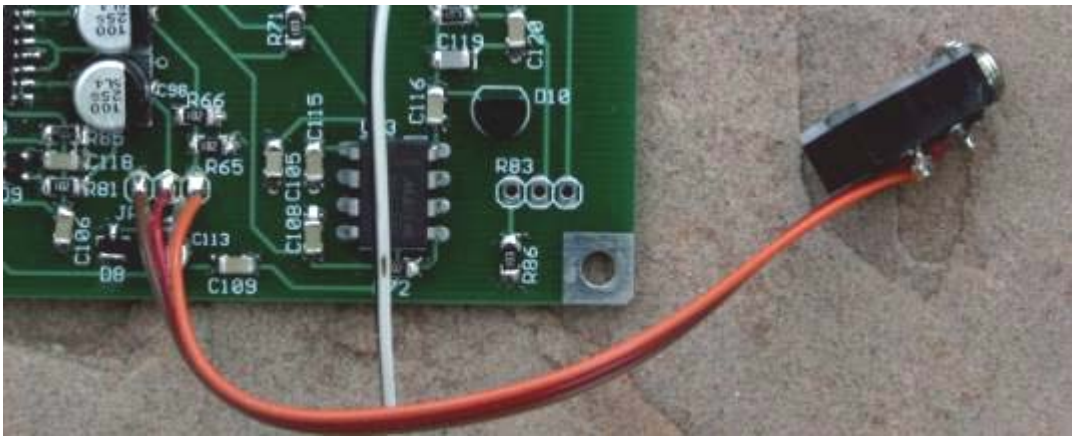

Figure 50. Connect the headphone jack to JP4 in the color order shown

SCAF Pot – 50K pot - Yellow, Green, Blue – 5” length – R83

Figure 51. Use Yellow/Green/Blue wire to connect to R83, the 50k SCAF pot in the color order shown

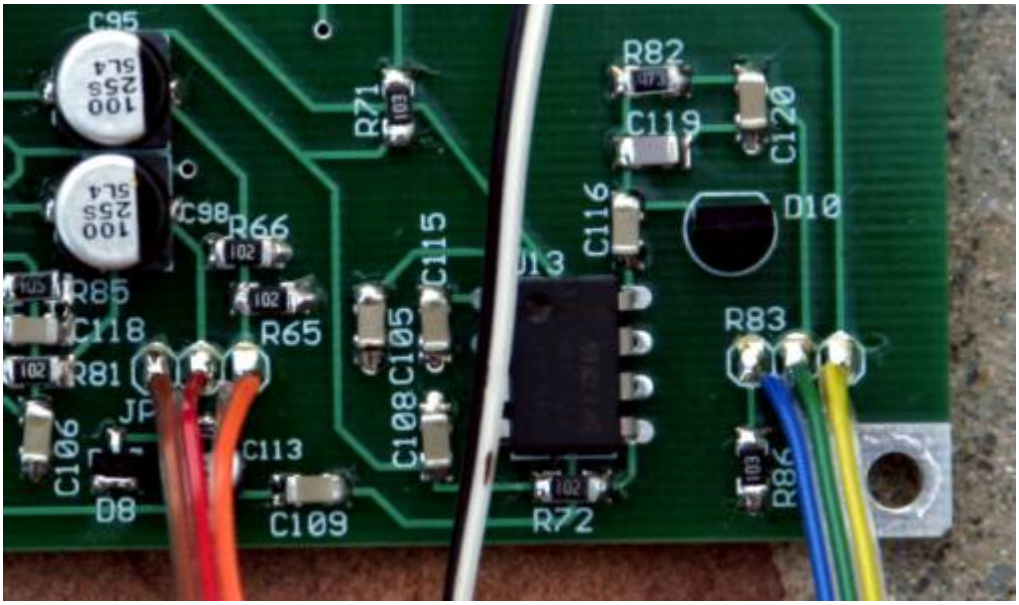

Figure 52. Connect the 50K SCAF pot to the R83 header pads in the color order shown

Volume Pot – 5K pot - Yellow, Green, Blue – 3” length – R77

Figure 53. Use Yellow/Green/Blue wire to connect to R77, the 5K volume control pot in the color order shown

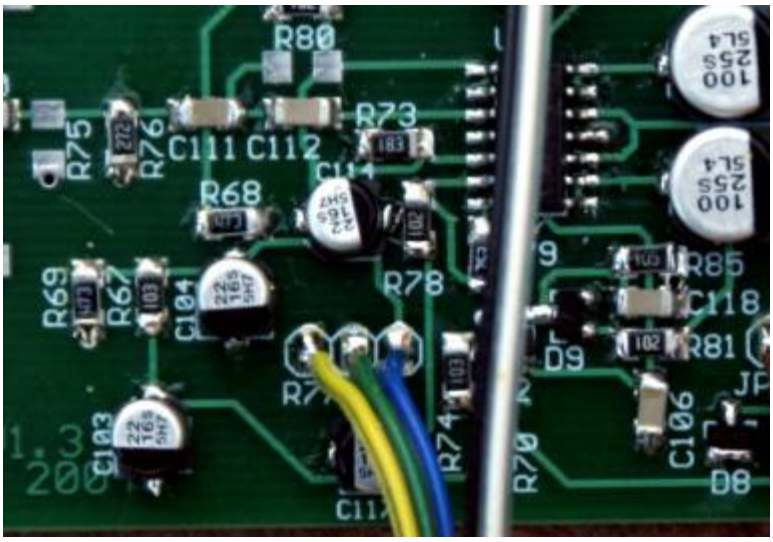

Figure 54. Connect the 5K volume control pot to the R77 header pads in the color order shown

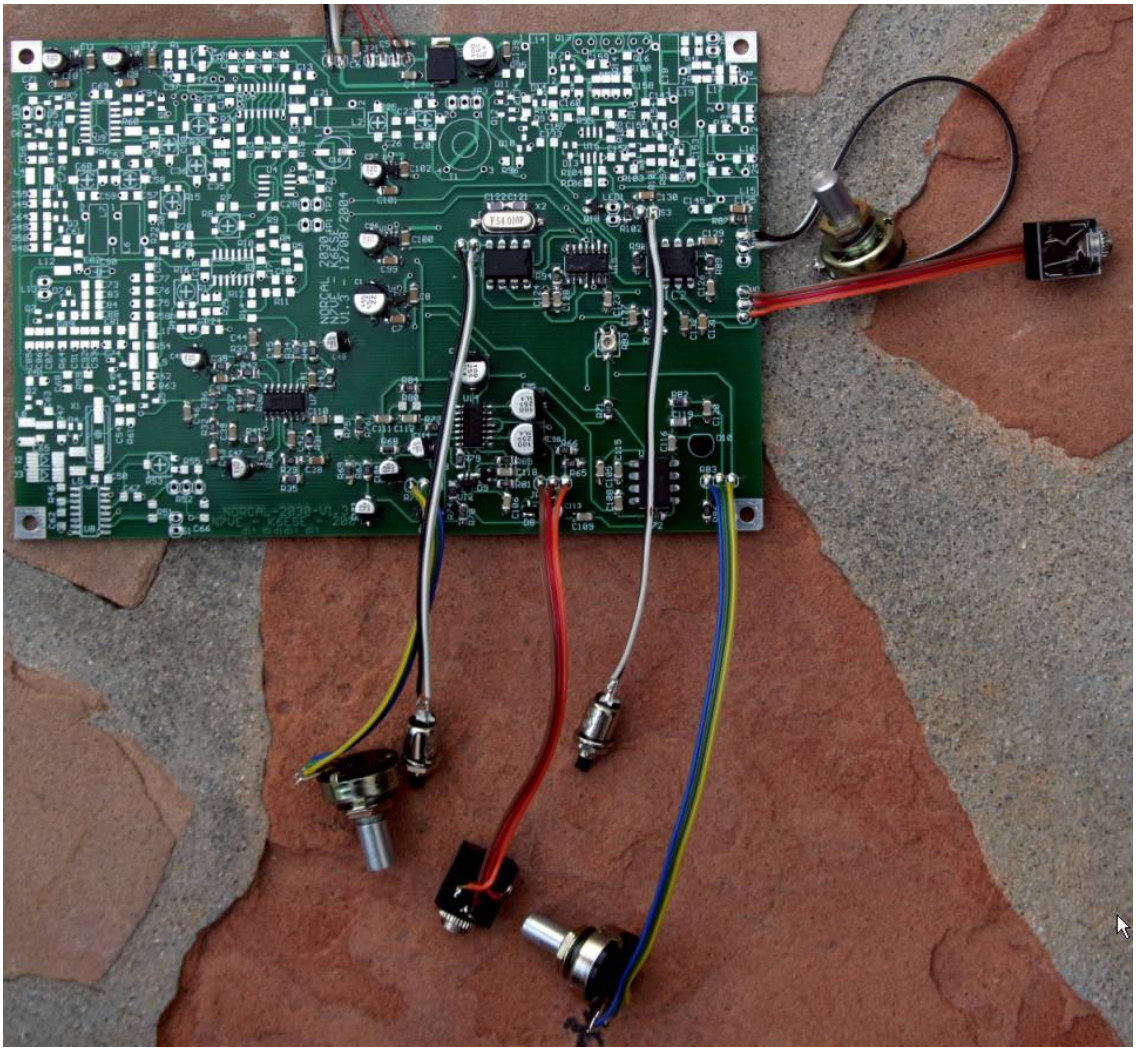

Figure 55. All controls attached thus far

Keyer, AFA and Additional Audio Section Tests

Attach headphones to the head phone jack. Make sure the 50K trimmer pot R93 is set to mid range. It comes preset this way from the factory.

Apply the 9v battery voltage. Listen for the AFA and the Keyer sign on messages. The Keyer sends "FB", while the AFA waits a few seconds and sends "2T3T". These two may overlap depending on the keyer speed.

Press the AFA button. The AFA should send "E" followed by "00R0". Since the VFO section is not built yet, the AFA is measuring zero frequency.

Press the keyer button. The keyer chip should send "HI".

Connect a set of paddles to the paddle jack. At this point, you should be able to exercise the keyer (don't worry, there is no transmitter yet), and you should be able to vary the cw speed via the cw speed pot.

Touch the three terminals of the volume control with a finger while listening to the headphones with the volume control setting to maximum volume. If the audio section is working properly, you should hear a faint 60 Hz "hum" from touching the volume control terminals. You should be able to very the volume with the volume control

Vary the SCAF filter pot while touching the volume control terminals. Listen for a change in the pitch of the noise as the cutoff frequency of the SCAF is raised and lowered.

This series of tests verifies all the circuitry that has been built thus far.

Disconnect the 9v battery supply.

Note: The AFA and CW Keyer may not reset properly if the voltage is removed from the rig for only a few seconds***. If the chips do not reset properly, they will not send the sign on messages on power up.*** If you power off the rig and want to power it back on immediately, you may need to ***press both the AFA and the Keyer push buttons*** to make sure the processors burn up all stray charge and thus get reset properly before turning the rig back on.

The operating instructions for the AFA and the keyer are at the end of this manual. The keyer in particular has several memories, a beacon mode, and a straight key mode where if a straight key is plugged in on power up (or if a paddle lever is held on power up), the keyer will disable itself and assume an external straight key is being used. The straight key mode is determined each time the keyer (i.e., the transceiver) is turned on.

VXO and T/R Offset

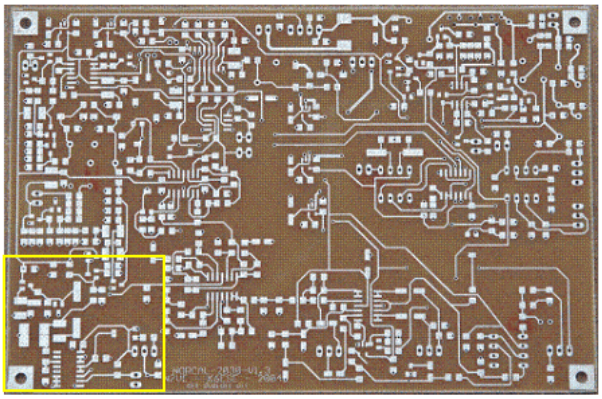

Figure 56. Location of VXO and T/R offset circuit.

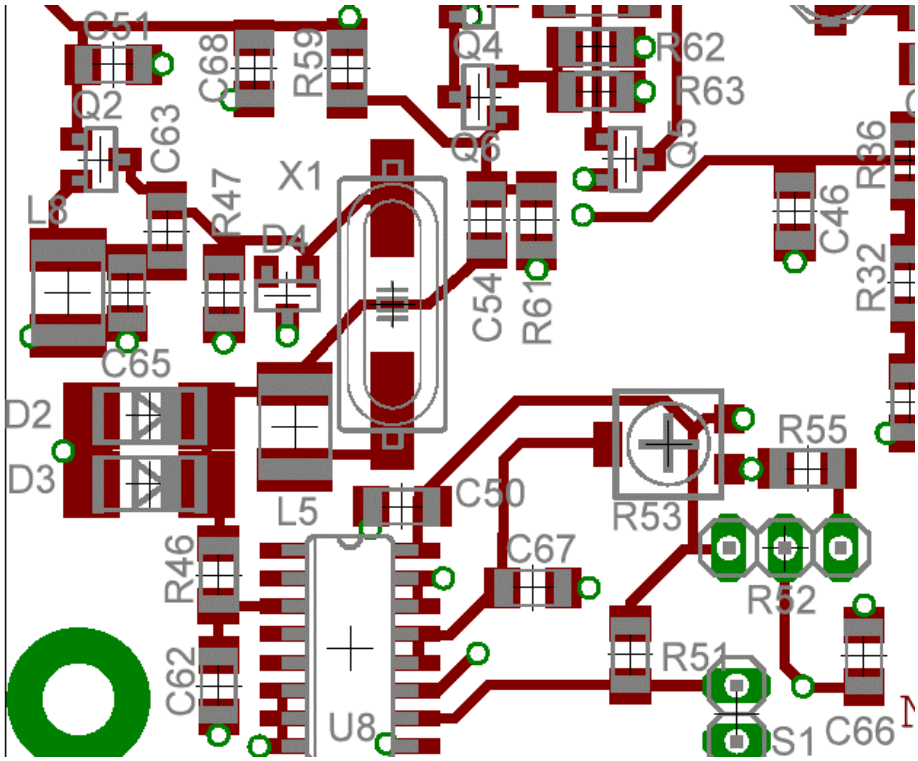

Figure 57. Close up of VXO and T/R offset circuit

The VXO section is the first portion that has frequency dependant parts. At this point you will need to decide which band to build this transceiver for, 20m or 30m. The frequency dependant parts will be identified below.

U8 (HFC4051), D2 (DL4007), and D3 (DL4007) need to be installed with the proper polarity. These parts are shown installed below to help aid in the correct orientation.

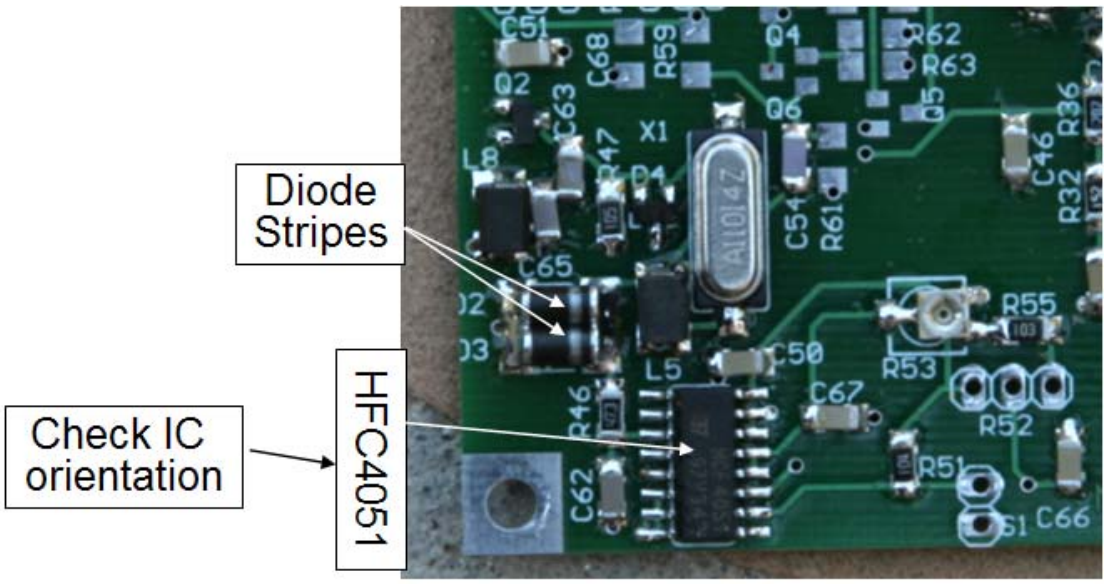

Figure 58. Proper orientation of U8, D2, and D3

Install the parts in this section in the following order:

U8 - **CD74HC4051M** ***- Caution! Double check installation polarity as shown above! Solder one corner pin, double check polarity, then solder the rest of the pins.***

R46 - **47K**
R51 - **100K**
R47 - **1M**
R53 - **50K trimmer pot**

D2, D3 - **DL4007 –** ***Hint: Pre-tin the ends before installing - Caution! Double check installation polarity as shown above!***

D4 - **MMBD4148**
Q2 - **MMBF5486**

C63 C65 - **47pF**
C50 C51 C66 C67 - **0.1uF**
C62 - **1000 pf**
L8 - **47 uH**

20m only parts:

R55 – Jumper using a short wire. Zero ohms is needed here for 20m. (Update – use 10K or better yet would be to replace this with a user supplied 470 ohm resistor)
C54 - 5 pf
L5 - 10 uH
X1 - 11.059 MHz Crystal

30m only parts:

R55 - 10K
C54 - 7.5 pf

L5 - 6.8 uH
X1 - 13.065 MHz Crystal

Attach R52 (25K panel mounted pot) to the front panel RIT control, and connect to the R52 connections on the board. Use 3” of Yellow/Green/Blue ribbon wire to make this connection. The 25K should have a center detent position, which is where the RIT control is normally set. As the 25K pot is tuned across its entire range, check for the center detent.

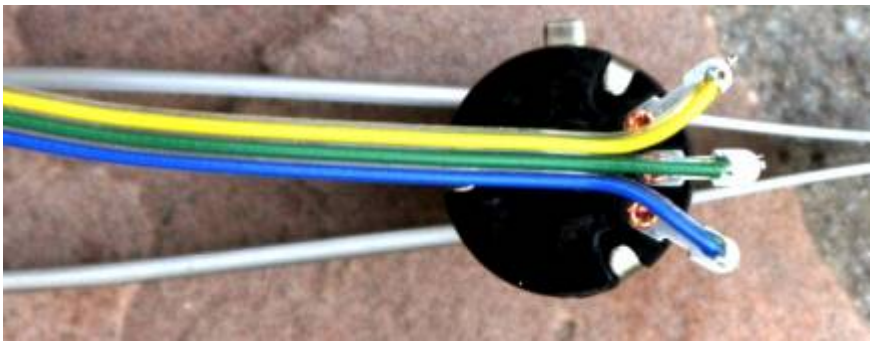

Figure 59. Yellow/Green/Blue wire to connect to R52, the 25k RIT pot in the color order shown (see update below).

Update: the RIT pot in figure 59 above seems to tune backwards. To fix this, reverse the yellow and blue wires from that shown above.

Use one of the two SPST panel mounted switches to connect to the S1 connections on the board. Connect using 3” of the Grey-Violet pair as shown.

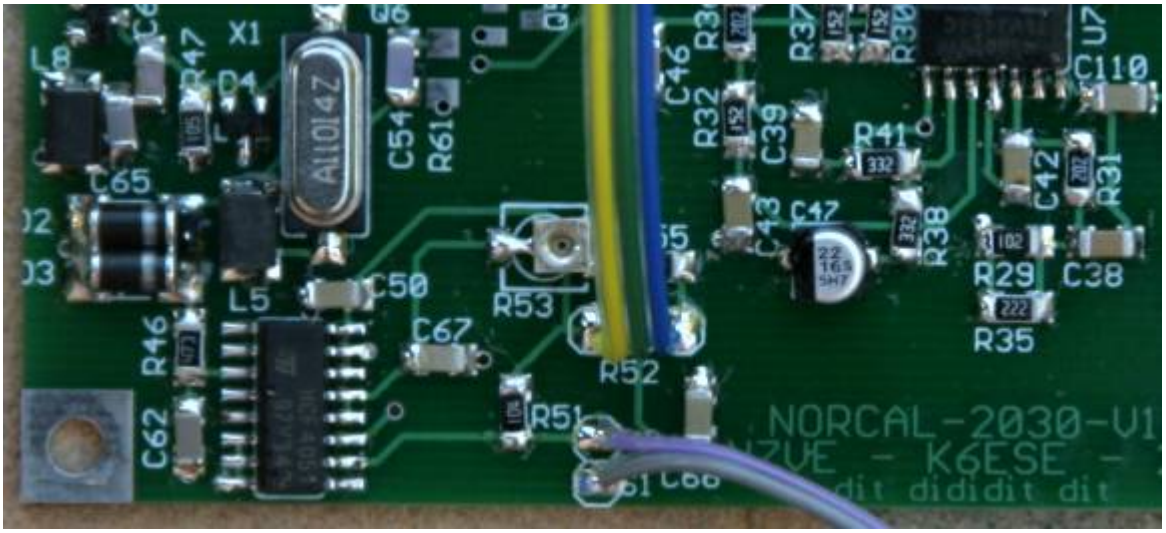

Figure 60. Connect the 25K RIT pot to the R52 header in the color order shown. Also attach a SPDT switch to S1

This VXO section of the rig will be tested after the completing the next section.

AFA RF Buffer and Phase Splitter

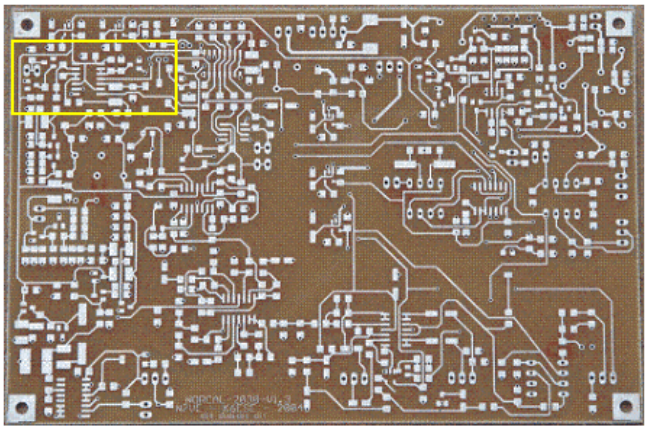

Figure 61. General location of the AFA RF Buffer and Phase Splitter

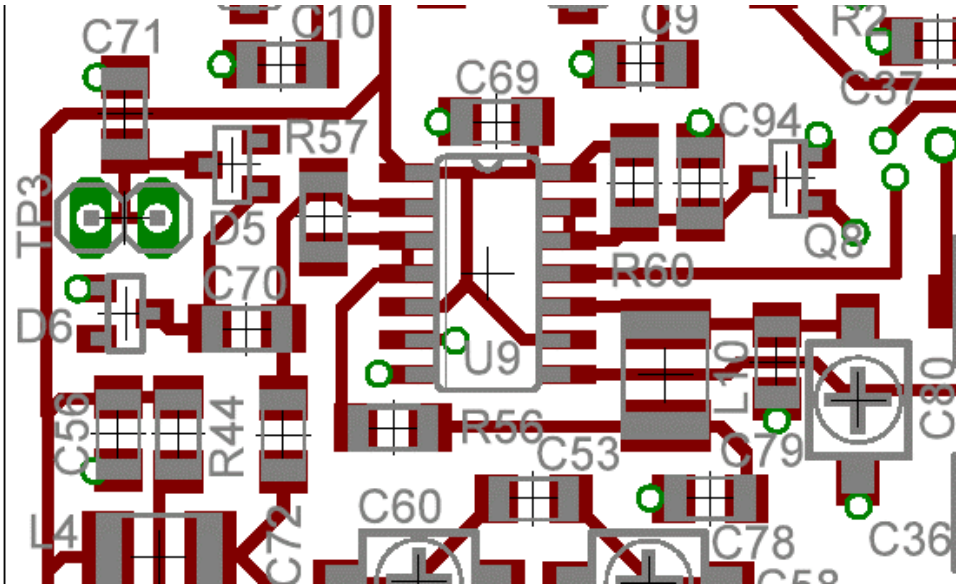

Figure 62. Close up view of the AFA RF Buffer and Phase Splitter Area

This next section skips over a few other sections primarily so that we can get the analog to digital squaring section for the AFA frequency counter in place so that we can temporary connections between this buffer and the VXO so that we can test the VXO that was just finished. The RF phasing section contains parts that are band specific.

The RF phase splitter will not be aligned until much later in the receiver section when alignment is performed to null out the opposite sideband.

Install the parts in this section in the following order:

U9 - 74AHC00D - ***- Caution! Double check installation polarity as shown below!***

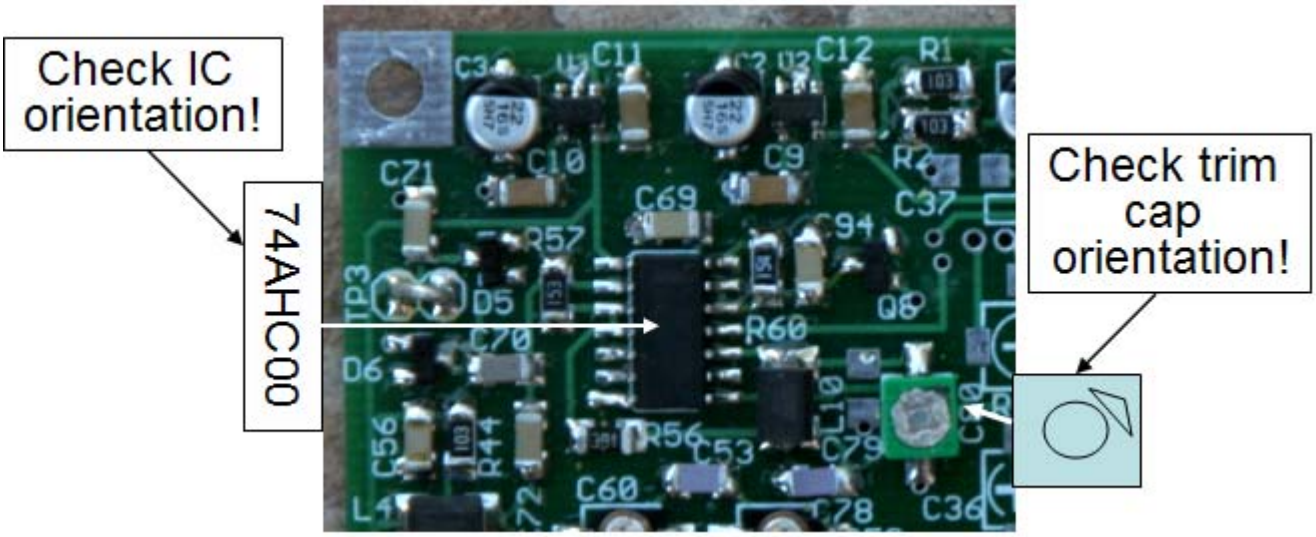

Figure 63. Orientation of U9 labeling as installed.

R56 - **390**
R57 - **15K**
R60 - **150K –** ***Double check orientation in the above diagram, R60 and C94 can be confusing!***

D5 D6 - **MMBD4148**
Q8 - **BS123**

C69 C71 C72 C94 - **0.1uF**
C70 - **1000 pf**

Band Specific Parts

20m only parts:

C78 - 27 pf (just below and to the right of L10)
C79 – not used (shown not mounted between L10 and trim cap C80)
L10 - 4.7 uH

30m only parts:

C78 - 39 pf (just below and to the right of L10)
C79 - 15 pf (shown not mounted above, between L10 and trim cap C80)
L10 - 6.8 uH

C80 - 30 pf trimmer cap- Both bands. ***This is installed last because of potential clearance issues with C79.*** ***Make sure the trim cap is installed with the proper orientation. This will affect tune up (ground end, hot end)!***

TP3: This is a test point for tuning up the LO filter. Create a loop out of a spare section of component lead and solder it into place.

VXO and AFA Buffer Tests

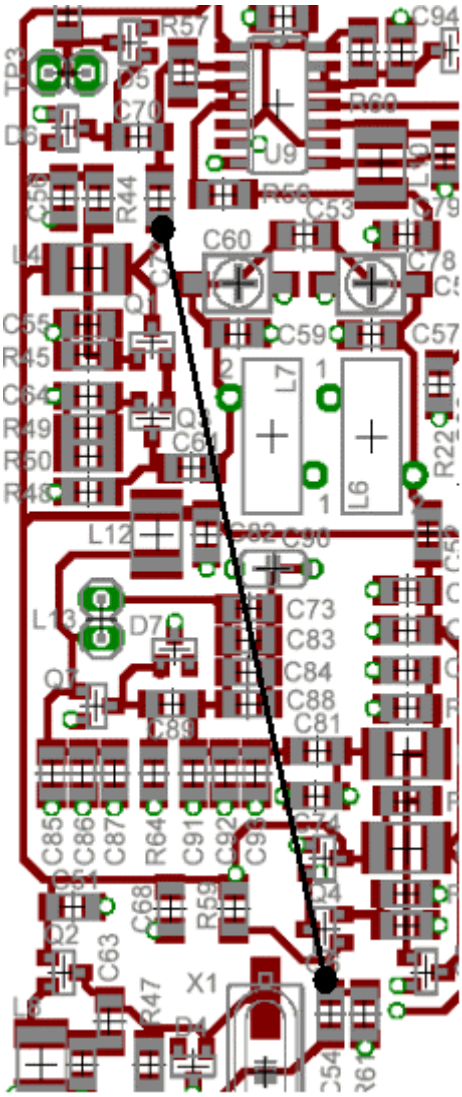

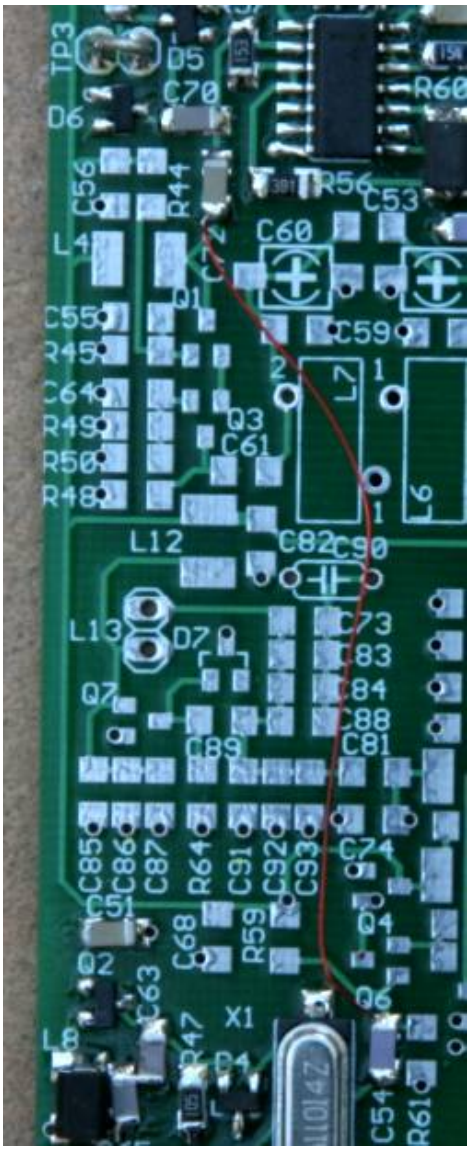

Figure 64. Temporary connection from C72 to C54

First install a temporary wire connection from C72 to C54 as shown above. Use a short length of # 32 gauge enamel wire to make the connection. This connection will allow the SSS AFA to measure the frequency of the VXO.

Apply the 9v battery voltage. Listen for the AFA and the Keyer sign on messages. The Keyer sends “FB”, while the AFA sends “2T3T”.

Press the AFA button and hold it down. It should cycle through “E” “L” “F” “ER” “LR” “FR” and then repeat the sequence again at a slower speed. Stop at “L”, the “long” frequency readout mode. The AFA should send the entire frequency down to the 1 Hz granularity. 11.059000 MHz would be read out as “11 R 059 R 000”. 11.059 MHz is the 20m VXO crystal frequency, while 13.0 MHz is the 30m VXO

crystal frequency. Once the “L” frequency mode has been set, momentarily pressing the AFA button will repeat this “long” frequency measurement.

The 20m version uses an 11.059 MHz crystal, while the 30m version uses a 13.065 MHz crystal. Measured frequency variations of 2 to 3 KHz from the specified crystal frequency are not unusual.

Set the spot switch to the “off” position. Set the RIT pot to one extreme and press the AFA button and record the frequency. It should be close to the desired crystal frequency. Set the RIT pot to the other extreme, press the AFA button and record the second frequency. The difference between the first frequency and the second frequency should be at least 2 KHz, and represents total tuning range of the RIT. If the spot switch is not set to the “off”, but rather in the “on” position, the RIT pot will not cause the VXO frequency to move. For these tests, the spot switch must be in the “off” position.

The RIT pot has a center detent. Set the RIT pot to this center position and measure the frequency. We will now set the T/R offset trim post to a frequency 600 Hz lower than this frequency. Thus, by default, when the RIT pot is centered in the center detent position, there will be a 600 Hz offset between transmit and receive. To do this, set the spot switch on and tune the VXO T/R offset on board trim pot R53 (see the detail on the VXO section) until the frequency is 600 Hz lower than just measured.

Later on, when the receiver is finished, you can take a signal and tune it in to where it “sounds right” to you (your preferred pitch). Then using the spot switch in the “spot” position, trim pot R53 can be adjusted until the received signal is zero beat. At that point, the transmit/receive offset will be adjusted to your preference, which may not be a 600 Hz offset.

This series of tests verifies VXO, T/R offset, and AFA circuitry that has been built thus far.

Disconnect the 9v battery supply.

Disconnect the temporary wire connection installed above!

LO Mixer and PTO

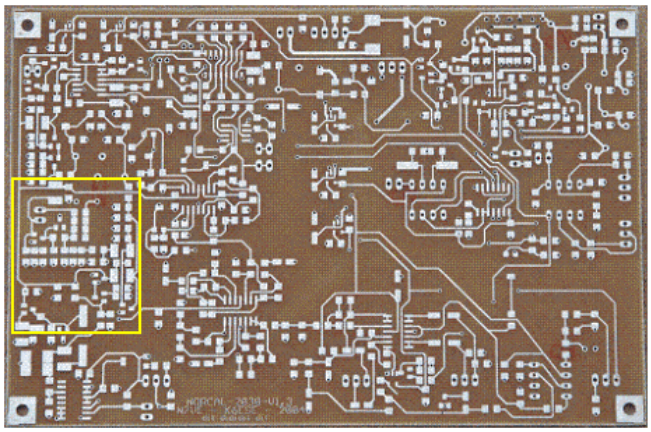

Figure 65. Board Location of the LO mixer and PTO circuitry

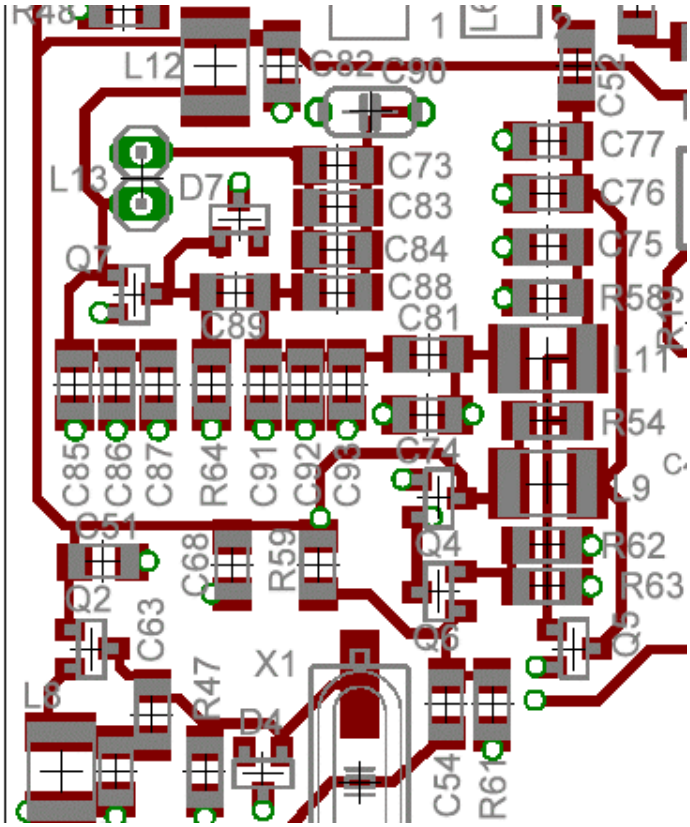

Figure 66. Close up of the PTO and Mixer section of the board

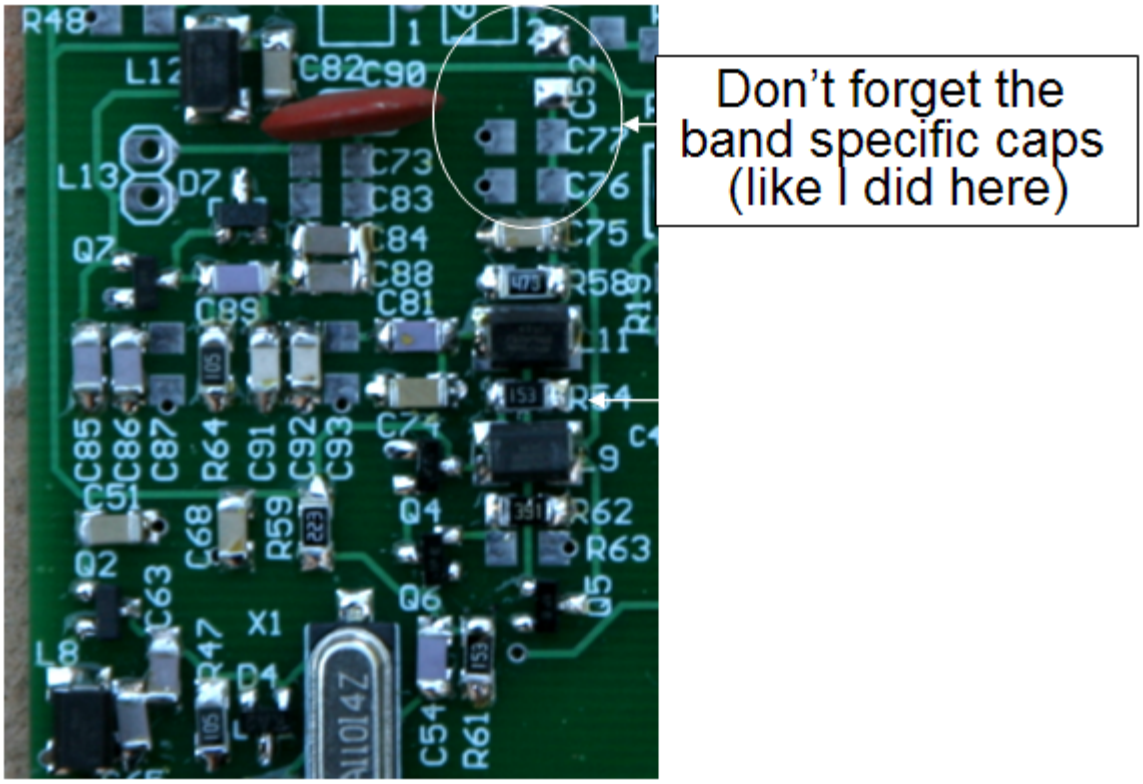

Figure 67. PTO and PTO/VXO mixer sections as built

Install the components in the following order:

R62 - **390**
R63 ***Optional. Installed in tune up section <u>only if needed</u> during tune up***
R54 R61 - **15K**
R59 - **22K**
R58 - **47K**
R64 - **1M**

D7 - **MMBD4148**
Q7 - **MMBF5486**
Q4 Q5 Q6 - **MMBT2222**

C81 - **5 pf**
C89 - **27 pf**
C91 C92 - **100 pf NPO AVX**
C74 - **470 pf NPO**
C85 C86 - **470 pf NPO AVX**
C84 C88 - **1000 pf NPO**
C68 C75 C82 - **0.1uF**

C73 C83 C87 C93 - Not Used

L9 - **1.5uH 5%**
L11 L12 - **100 uH ("101")**

C90 - **100 pf N220 Disc capacitor – Note: This part is found in the loose hardware bag.**

20m only parts:

C52 - 5 pf
C76 - 68 pf
C77 – Not used

30m only parts:

C52 - 7.5 pf
C76 - 150 pf
C77 - Not used

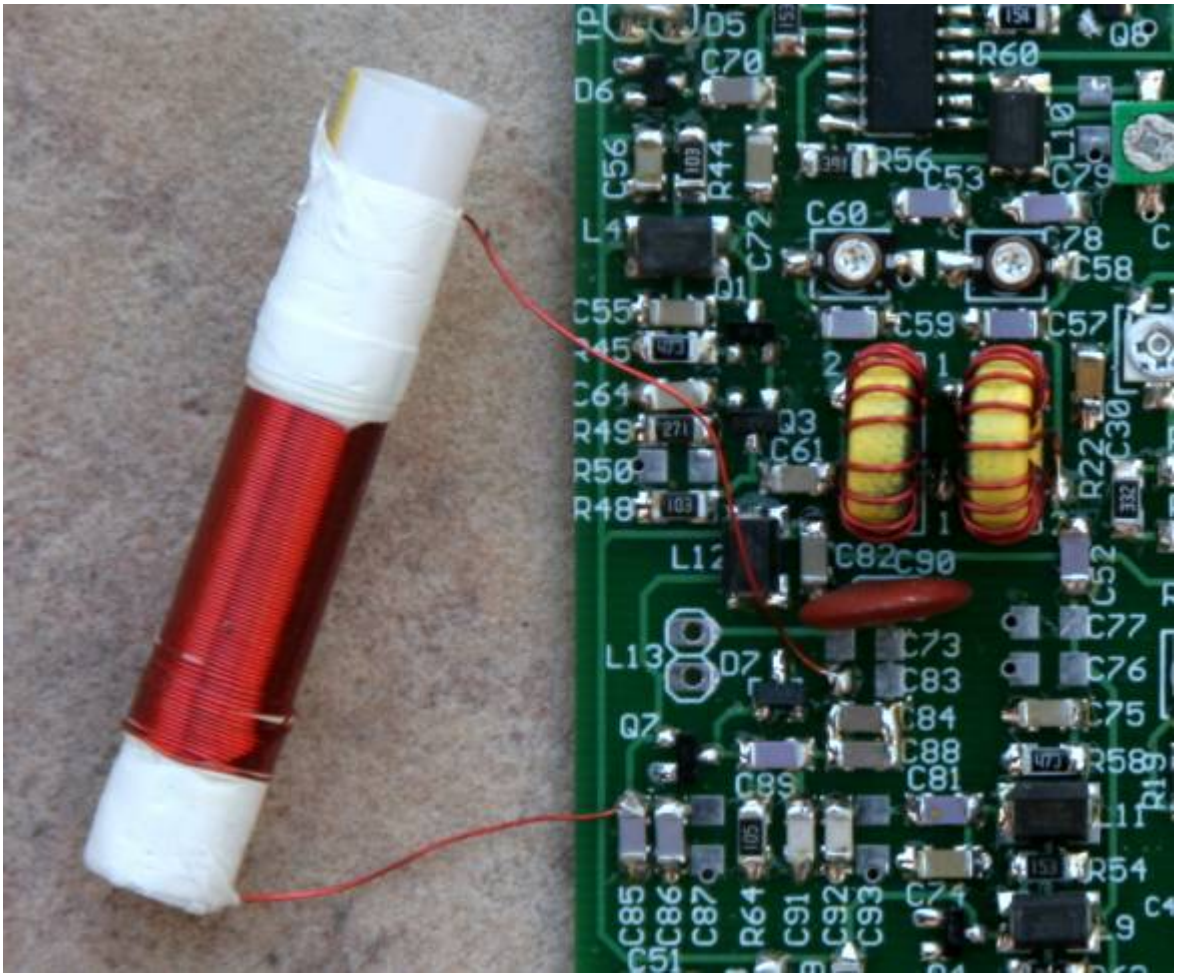

Figure 68. Temporary soda straw PTO coil L13 connected to the PTO oscillator circuit.

The temporary PTO coil is made using 82T of #30 gauge enamel wire wound on a 2” section of a McDonald’s soda straw. This straw fatter than normal and is a bit larger than ¼” in diameter. The diameter is not highly critical. This is a dummy inductor used to make sure that the PTO oscillator works, and later on that the LO mixer, filtering, and LO amp work as well. If a more normal ¼” diameter straw is used, use 95T.

A hole is made through the straw in order to provide an anchor point for the first turn. Twist off the first turn as shown below.

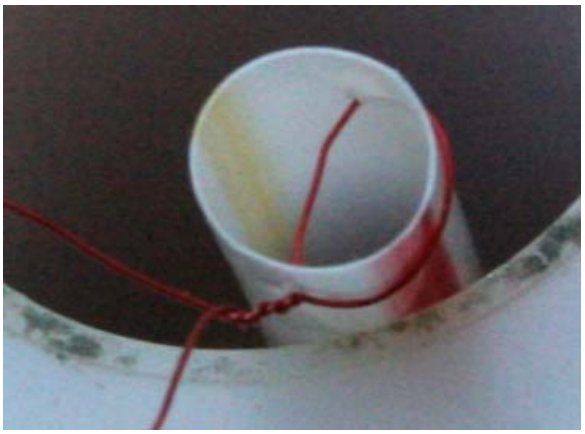

Figure 69. Anchoring the first turn of the temporary PTO coil.

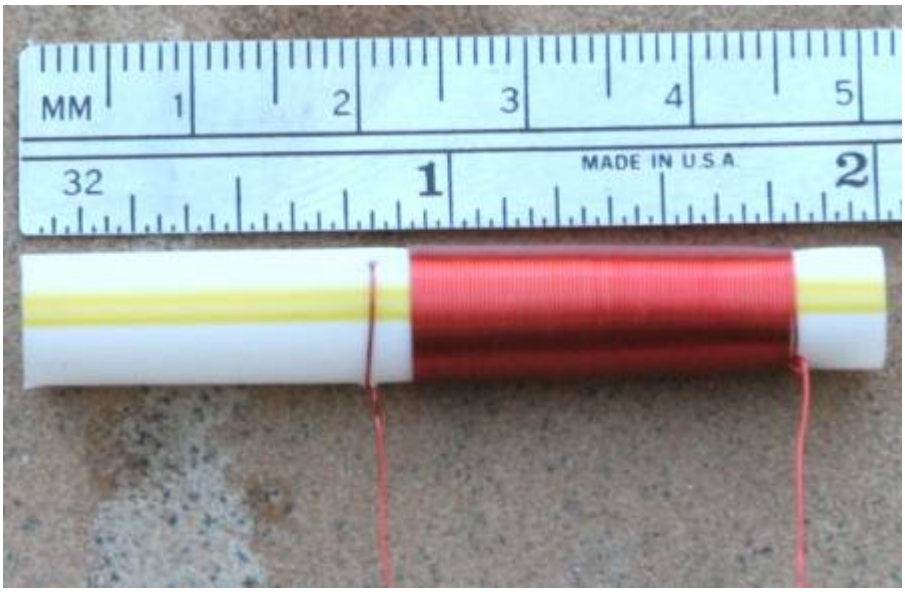

Figure 70. Finished temporary PTO coil with 82T. Tie off holes placed on both ends

Figure 71. McDonald's straw diameter.

Remove the temporary 100 ohm load resistor from the output of the switching supply. At this point the board draws enough current to have proper switching supply regulation.

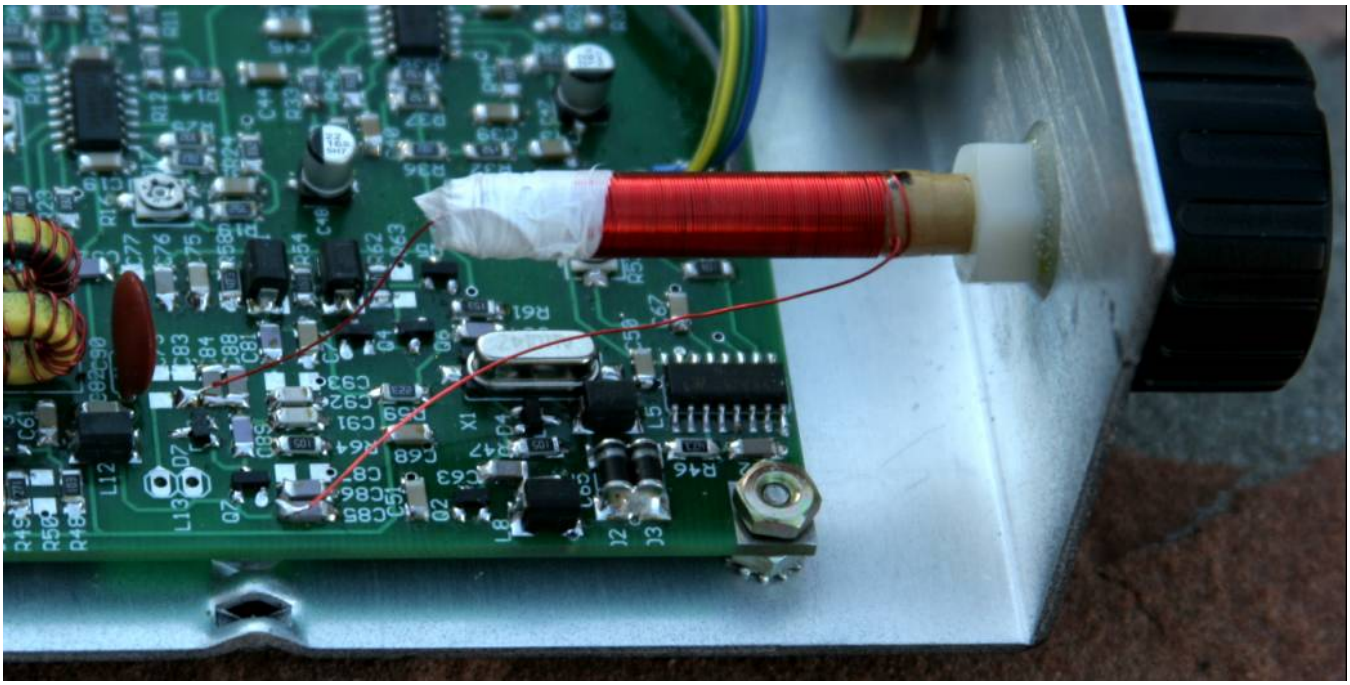

Figure 72. Main tuning PTO coil L13 shown mounted to the front panel. This is used only when the rig is finished.

While we are at this point, we might as well take some time to start work on the real L13 PTO coil as this will take some time (epoxy glue is involved) can be done in the background.

L13 - **PTO coil 105T # 30 on Kevlar Coil Form**

On the first turn of L13, insert a twist. Leave 3” of free wire on the free end as the connection from L13 to the board is rather long, as shown below. Next epoxy this single coil turn all the way around the tuning coil form and wait several hours for it to set. In order to wrap this coil, the first turn needs to be firmly anchored in place, and the epoxy does that.

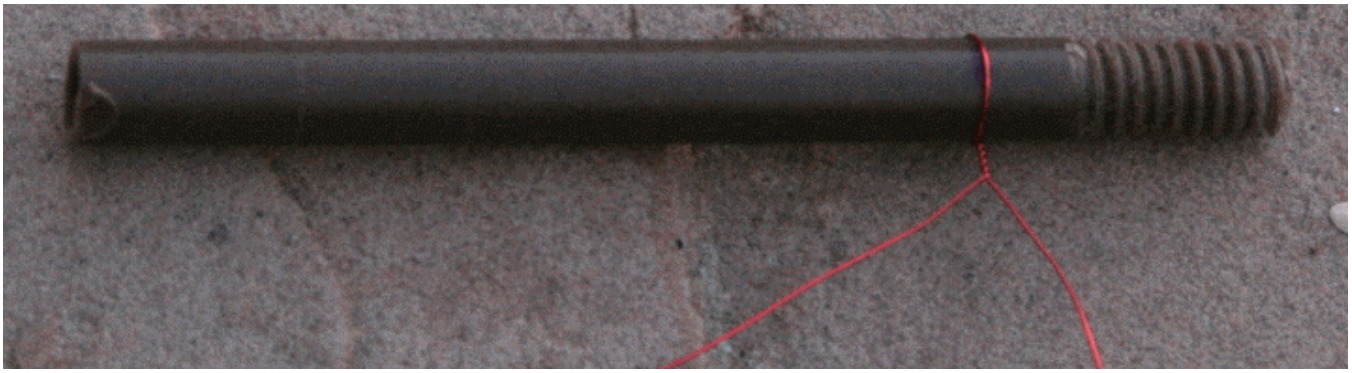

Figure 73. Wrap first turn on the PTO coil. Position ¾” back from front, twist single turn in place

Several hours later, after the epoxy has solidly dried, wind the next 104 turns tightly, with all turns wound “shoulder to shoulder” as shown. On the last turn, tightly wrap the last ½” of the coil with Teflon plumbing tape. ***Make sure to keep the coil turns wrapped snuggly on the coil form the entire time. A loose coil will drift badly.***

105 turns is too many turns. However, the Teflon plumbing tape will allow the extra turns to be pulled off the end of L13 in order to tune to PTO to the proper frequency. In this manner, we can avoid the use of an expensive tuning capacitor to set the final receiver tuning range. Each complete turn removed from the coil moves the PTO frequency by roughly 11 KHz of tuning range. Partial turns can be removed at the end of the tuning process. Just keep in mind that placing the cover on the receiver will move the frequency an additional 2 KHz (2 KHz higher on 20m, 2 KHz lower on 30m)

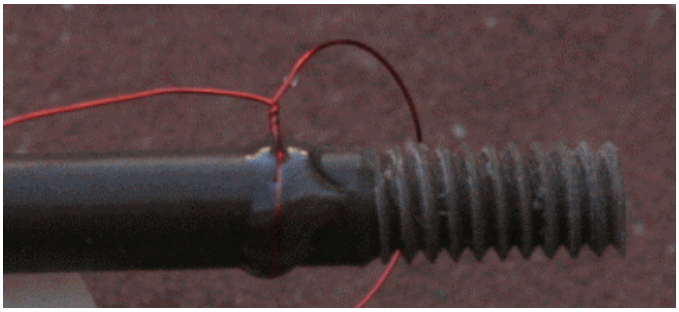

Figure 74. First turn is glued (epoxy) into place to make it easier to wrap the rest of the turns

When epoxy is used to anchor the first turn into place, double check to make sure it is spaced ¾” inches from the front.

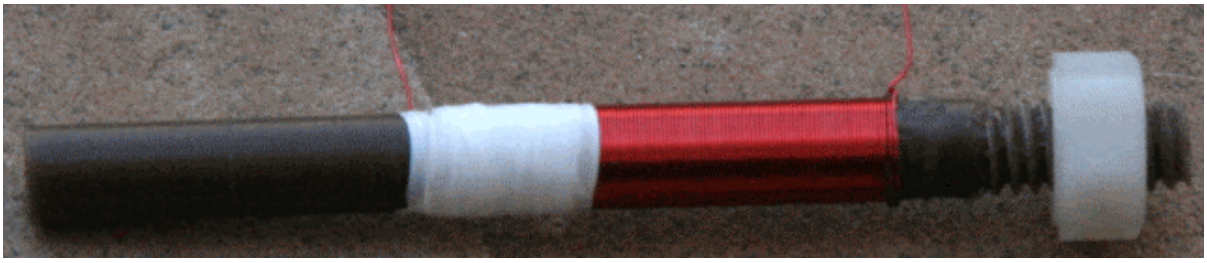

Figure 75. Coil with completed 105 turns. Turns wound tight and "shoulder to shoulder".

The 0.5" end of the coil is wrapped with Teflon plumbers tape. Make sure to prepare a 6" section of tape in advance ready to go. When the Teflon tape is wrapped, it needs to be wrapped in the same direction as the turns winding in order to keep the windings tight as the tape is wrapped.

Figure 76. PTO coil coated in clear nail polish. The wife recommends "Sally Hansen Diamond Strength"

Notice that Teflon tape is not sticky, but it holds in place nicely. The bare section of the coil that is left exposed should be coated in clear finger nail polish and left to dry over night. A lot of clear nail polishes do not dry hard, but Vicki (my wife) recommends "Sally Hansen Diamond Strength". She got this for me at Ulta. It works very well compared to the cheap stuff I used last time.

In order to mount the above coil, the nylon nut should be threaded on the coil as shown above with 1/8th inch of threaded coil form in front on the nylon nut. The coil should not be attached to the front panel until after the PC board is finished and mounted.

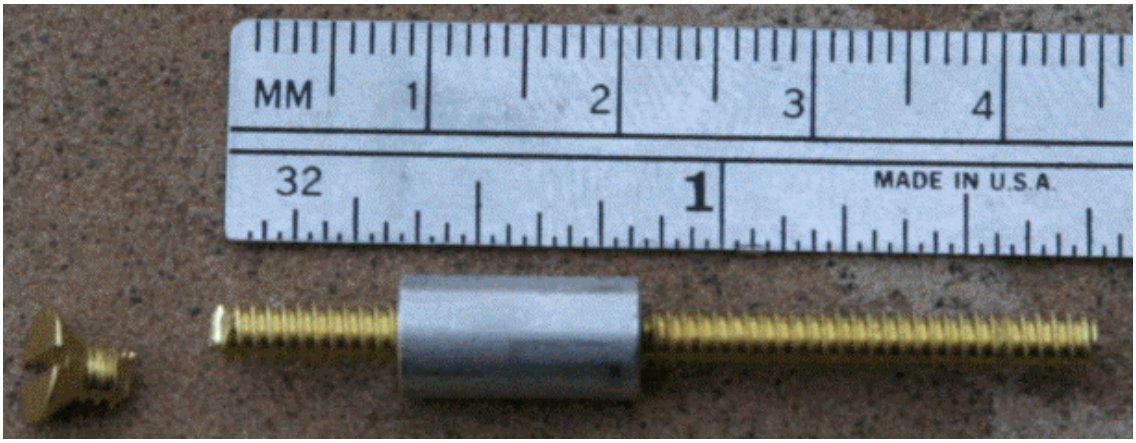

Figure 77. 2" brass screw cut back to a total length of 1 ¾ inches.

The brass screw is both too long and has a head that is too large to fit within the ¼" tuning knob. The head needs to be cut off leaving 1 ¾" length. I used a bolt cutter to cut the screw, but a hacksaw or a dremel tool cutoff wheel can also be used to do this. The primary goal is to end up with 1 ¼" of brass screw extending behind the ½" spacer as shown below. The spacer will act like a stop when the PTO tuning knob is turned completely in (~14.065 MHz on 20m or ~10.098 MHz on 30m).

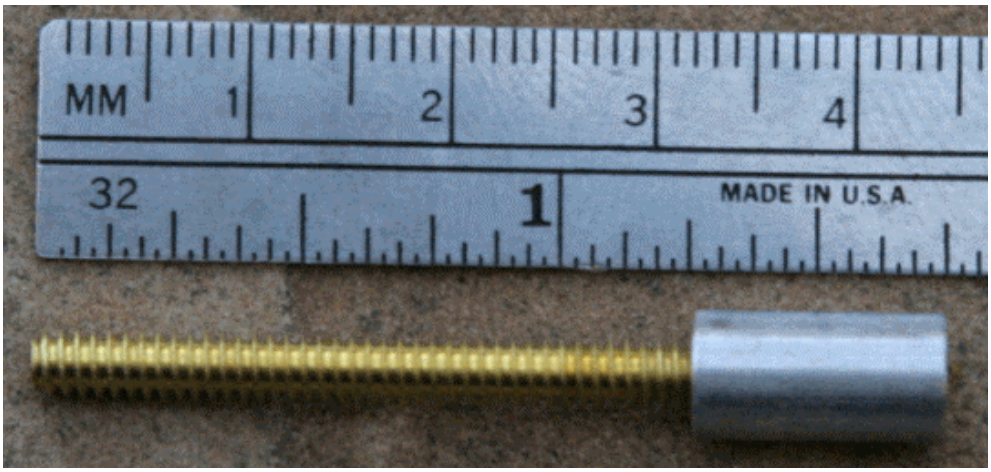

Figure 78. Final screw with mounted spacer.

The cut end of the screw is hidden in the spacer leaving 1 ¼" of brass screw beyond the spacer. Super glue is used secure the spacer on the end of the screw. Again, the cut off end needs to be at the end of the spacer. ***We do not want to thread the rough cut end of the screw into the PTO coil form.*** If for some reason you mess this up, True Value hardware stores carry both the 2" 6-32 brass screws and matching 6-32 threaded ½" aluminum spacers.

The PTO coil assembly will now be set aside until after the main board is mounted into the chassis.

LO Filter and LO amp

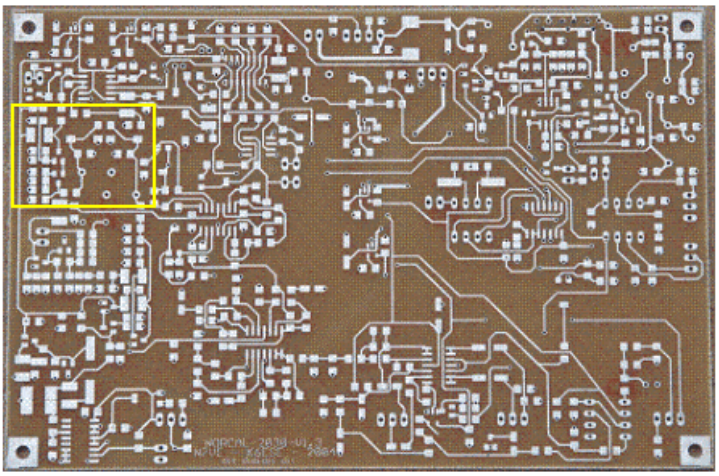

Figure 79. General location of LO Filter and Amp

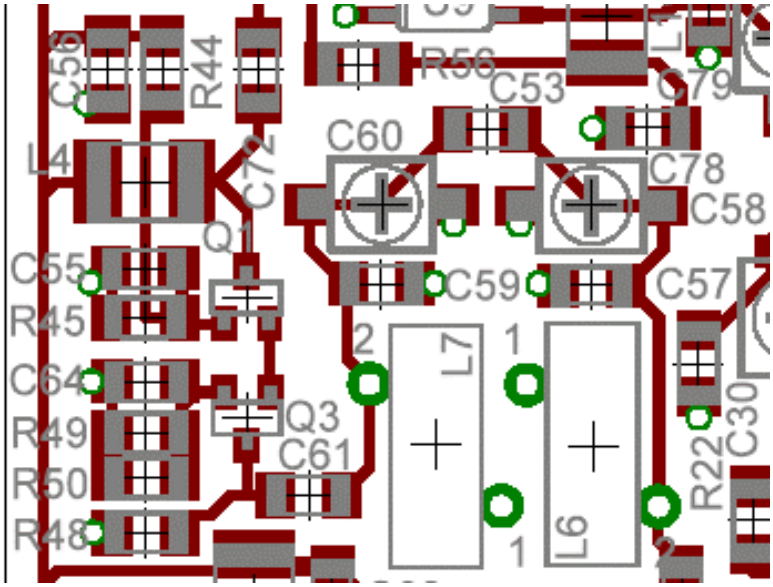

Figure 80. Close up of the LO Filter and Amp components

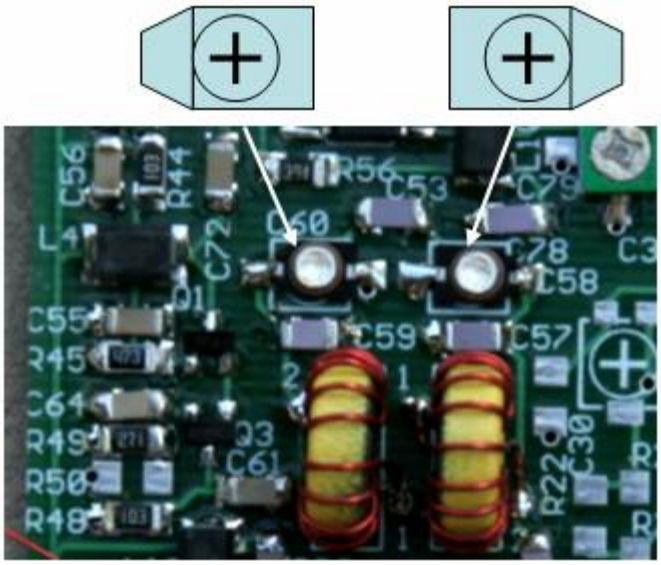

Figure 81. LO Filter and amplifier as built. Both trim caps must have proper orientation

R49 - **270**
R50 – ***Optional. Installed in tune up section <u>only if needed</u> during the tune up section***
R44 R48 - **10K**
R45 - **47K**

Q1 - **MMBT2222**
Q3 - **MMBF5486**

C55 C56 C61 - **0.1uF**

L4 - **47 uH**

Figure 82. Coils L6 and L7 are prepared to be mounted surface mount style on the top of the board on the coil holes

<u>20m only parts:</u>

C53 - 5 pf
C59 - 150 pf

C57 - 120 pf
C64 - 0.1uF
L6 L7 - 15T #26 T37-6; 10" of #26 enamel wire

30m only parts:

C53 - 7.5 pf
C57 C59 - 180 pf
L6 L7 - 19T #26 T37-6; 11" of #26 enamel wire

Install for both bands:

C58 C60 - **50 pf trimmer cap.** ***These caps must have the right orientation or it will affect tune up (hot end, ground end). See the figures above!***

Note: Make sure to wax the cores L6 and L7 as they tend to be microphonic. I used a birthday candle to drip wax on the top and the bottom of the core to secure it from vibration. Alternative, I have also used a craft glue gun and low temperature glue. This is a bit messy, but can be smoothed up a bit by using a hair dryer set on "high" to melt the glue slightly. Make sure to secure the base of the coil to the board and the windings around the core. Off hand, I think the wax method is more messy, but perhaps more effective.

The entire point of the exercise is to damp vibrations in these two coils in order to kill microphonics. These coils are the only two components on the entire radio that needs this special treatment.

First time LO filter tune up

Here we will tune up the LO filter for what ever frequency the PTO and the VXO mix to. At this point in time, the PTO coil has not been properly tuned, so the mixed LO frequency is probably off by may be 100 to 150 KHz. In order to properly tune the PTO, the filter must first pass the mixed frequency so that we can measure where we are with the on board AFA. From there we can start shifting the PTO frequency to where it needs to be, which will require retuning the LO filter a couple of times also.

The LO filter section is composed of two tuned circuits, one tuned by C58 and the other tuned by C60. The goal is to peak both variable capacitors to get between 1 and 1.5v at test point 3 (TP3). The voltage is measured at TP3 using a normal voltmeter on a low voltage range such as a 2 or 3v scale. Although variable capacitors C58 and C60 can be turned over a 360 degree range, the actual tuning range is done over a 180 range. Turning these capacitors over a 360 degree range simply makes the variable capacitors pass through their tuning range twice.

What will be done here is to move C58 a fraction of a turn (roughly $1/10^{th}$), then sweep C60 through its tuning ranging looking for a peak, then go back to C58 and turn another fraction and try again. Once a peak is found, adjust both C58 and C60 for the best peak. C60 is the more critical setting of the two caps, so be sure to do tuning sweeps with C60 and incremental changes in C58.

When the filter is tuned up, the peak TP3 ideally will be in the 1 to 1.5v range. We will not worry about this at this time, but there are gain adjustment resistors that can get added in either the mixer or the LO amp section or both to bring the detected voltage up to the needed range if it is low.

Right now we are using a temporary McDonald's straw PTO coil. When the filter is tuned up, we will find out that the LO frequency is off by quite a bit. We could tune the straw PTO just like we tune the final PTO coil, but it will not help us when we put the actual PTO in the circuit because it will be off also. The point of this initial tuning is to just make sure things are working and to get the tuning in the right ball park.

Quadrature detector/front end filter

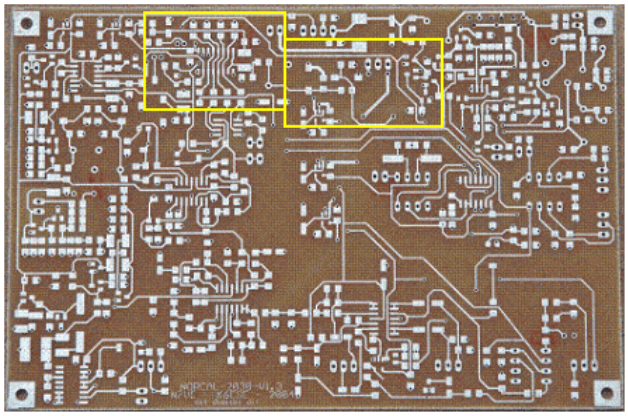

Figure 83. General location of the Detector and Front End Filter

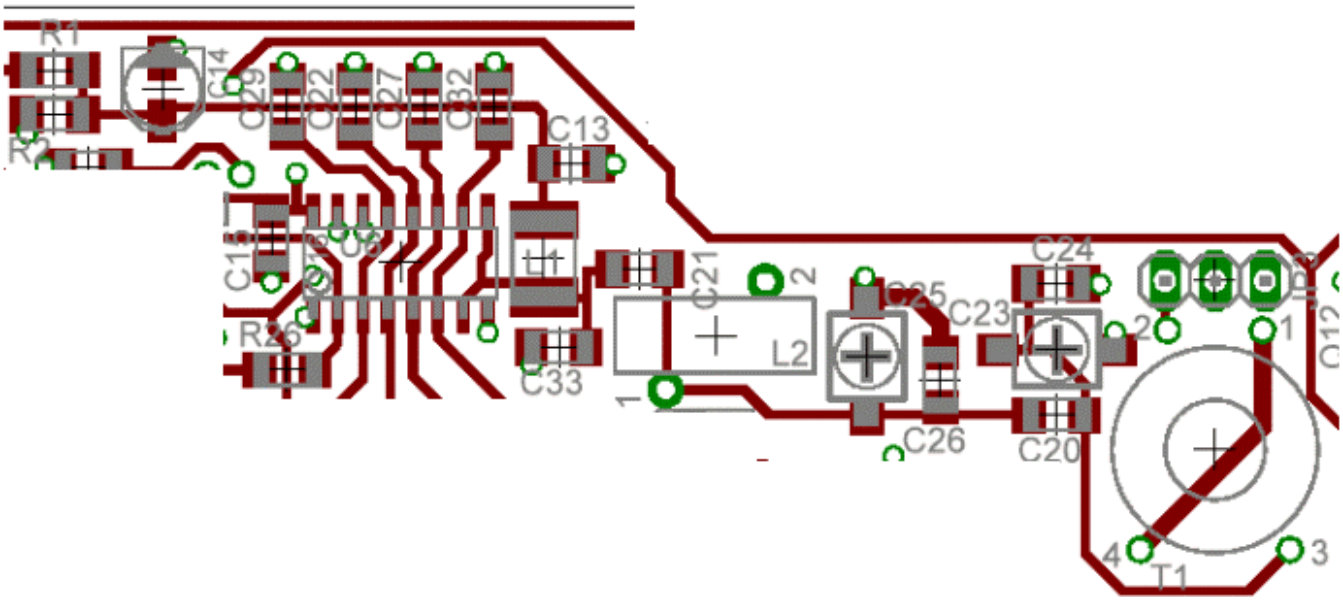

Figure 84. Close up of the detector and the RF tuned front end

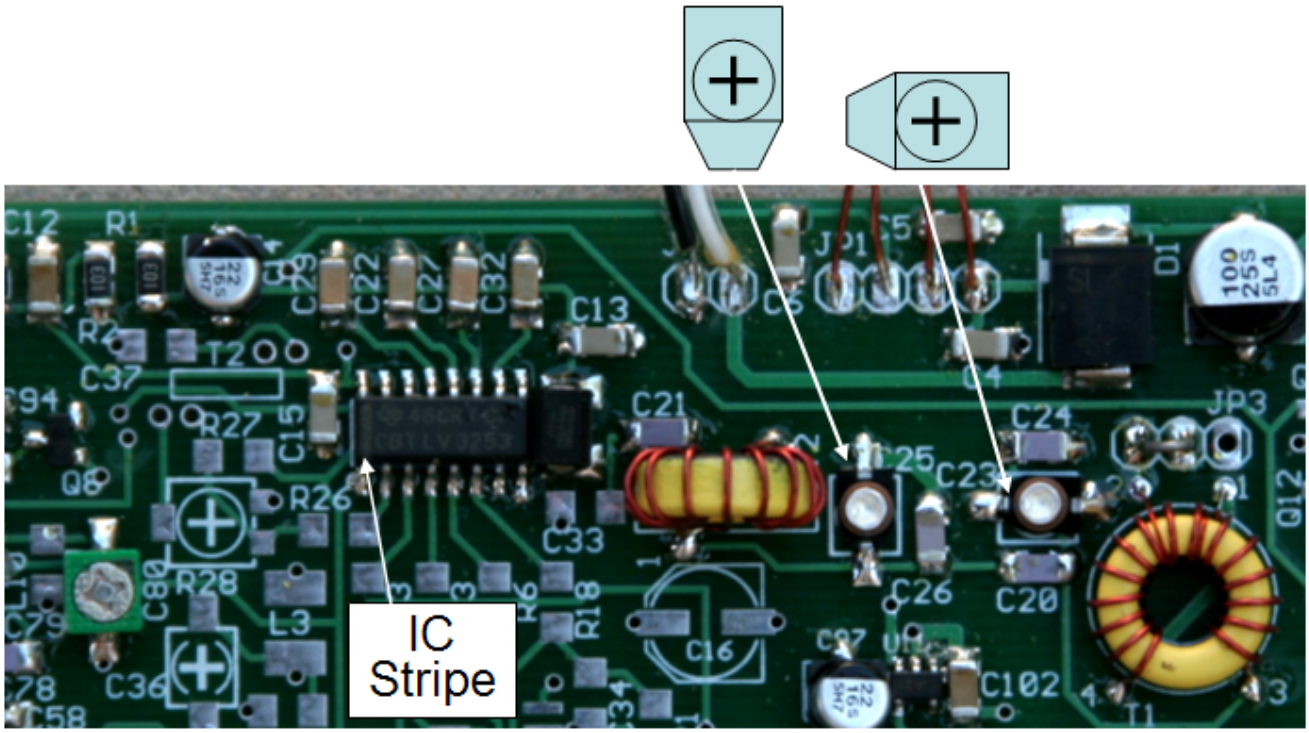

Figure 85. Picture of detector and RF front end with parts installed. Note trim cap orientation and jumper on JP3!

U6 - **SN74CBTLV3253** – ***Caution! Makes sure U6 is installed with the polarization as shown above! Connect one pin, double check polarity, then solder all the rest of the pins.***

Jumper JP3 as shown above, connecting the left and center pads together. These two pads allow the insertion of a RF attenuator if desired. The third unused pad on the right is a ground connection.

R1 R2 - **10K –** **Update! The orientation of R1 and R2 in figure 85 are wrong. Need horizontal connections, not vertical. See figure 84 or figure 63.**

R26 R27 - **Not used**

C13 C15 - **0.1 uf**
C22 C27 C29 C32 - **0.82 uf**
C33 - **Not used**
C14 - **22 uf**

L1 - **100uH**

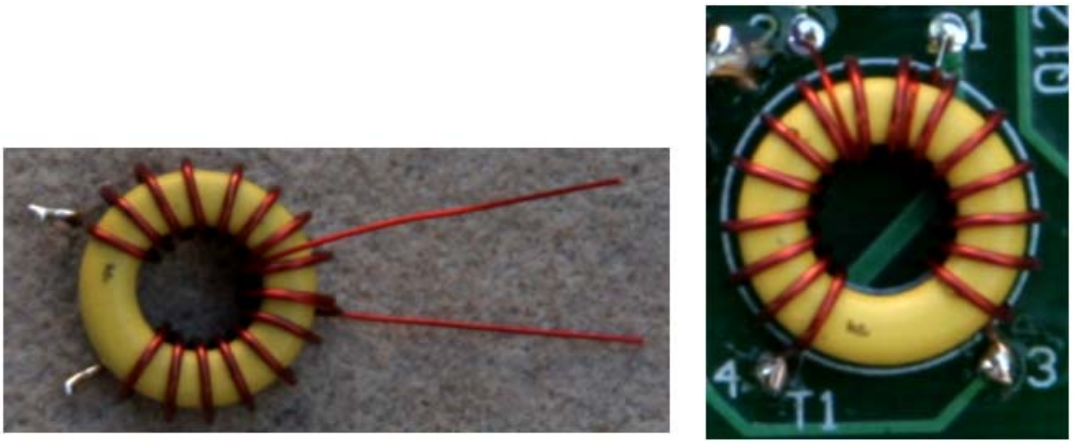

Figure 86. Detail on T1. Two turn # 32 to pads 1 & 2. Main winding connect to pads 3 & 4.

Figure 87. L2 leads formed to prepare for surface mounting on the top of the through hole pads provided.

I like mounting T1 and L2 surface mount style on top of the through hole pads provided.

20m only parts:

C20 - 5 pf
C21 - 33 pf
C24 - 120 pf
C26 - 100 pf
L2 - 15T #26 T37-6 10" of #26 wire
T1 - 15T #26 T37-6 connected across T1 connections 3 & 4, plus a 2T winding connected across T1 connections 1 & 2 (see picture above) ; 10" of #26, 4" of #30 enamel wire

30m only parts:

C20 - 7.5 pf
C21 - 47
C24 - 180 pf
C26 - 150 pf
L2 - 18T #26 T37-6 10" of #26 wire
T1 - 19T #26 T37-6 connected across T1 connections T1 3 & 4, plus 2T connected across T1 connections T1 1 & 2 (see picture above); 10" of #26 and 4" of #30 enamel wire

Connect the following for both bands:

C23 C25 - **50 pf trimmer capacitor.** ***Make sure the trim caps are oriented as shown above. They have polarity that can affect tune up.***

Make sure to short the correct pads on JP3. The jumper location is shown in the picture above. If the jumper is removed, a switchable attenuator can be added in its place. The unused third pad on JP3 is a ground pad to attach the ground legs of an attenuator.

Detector Tests

Apply 9v and check that all the detector caps (C22 C27 C29 C32) have 1.5v across them.
Using an ohm meter, check that Terminal 2 and 3 of T1 are both shorted to ground.

Remove the 9v battery.

Audio Pre-amp and Audio Phasing

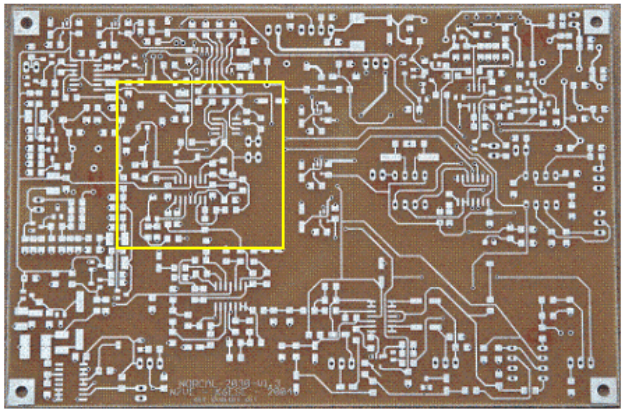

Figure 88. Location of Audio Preamp and Phasing sections

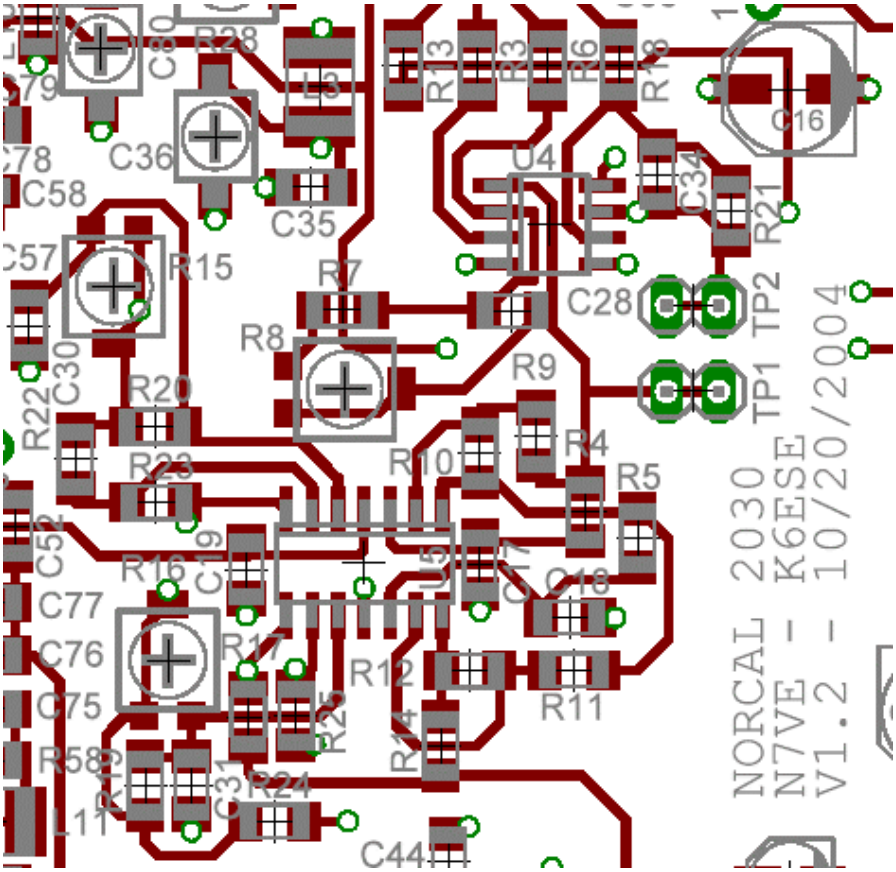

Figure 89. Close up of Audio Preamp and Phasing sections

Insert the parts in the following order:

U4 - LT6231 – ***Caution! Make sure the part is installed with the proper polarity as shown below. Solder one pin, then double check the orientation before finishing.***

U5 - TLV2464 - ***Caution! Make sure the part is installed with the proper polarity as shown below. Solder one pin, then double check the orientation before finishing.***

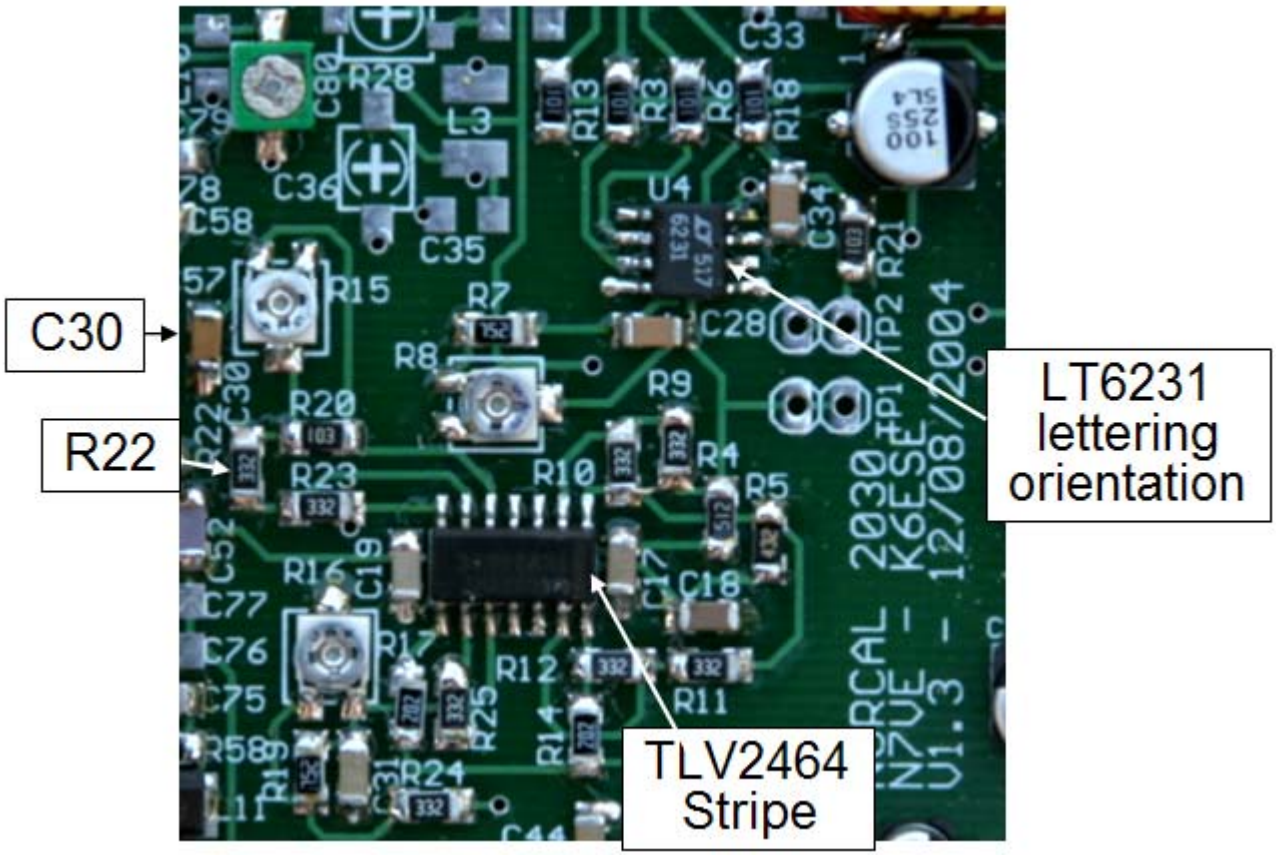

Figure 90. Component alignment of U4, and U5. Note C30, R22 locations

Some of the component placements are somewhat confusing. Refer to the above for resistor placements.

R3 R6 R13 R18 - **100**
R14 R17 - **2K**
R9 R10 R11 R12 R22 R23 R24 R25 - **3.3K**
R5 - **4.3K**
R4 - **5.1K**
R7 R19 - **7.5k**
R20 R21- **10k**

C28 C30 C34 - **0.01 uf X7R** ***(note: C30 is to the left of the trimmer R15)***
C17 - **0.047 uf X7R**
C19 C31 **- 0.1 uf X7R**
C18 - **0.47 uf X7R**

C16 - **100 uf 25v** - ***Caution! Make sure the part is installed with the proper polarity as shown above.***

R8 - **5K trimmer pot**
R15 R16 - **50K trimmer pot**

Audio Pre-amp and Audio Phasing Tests

Apply 9v.

Check the input 3.3v to the board to make sure it is ok.

Check the 5-8v input to the board to make sure it is ~7v.

Check that TP2 and TP3 have ~1.5v across them.

Check all four corner pins of U5 - TLV2464. They should all be at ~ 1.5v

Disconnect the 9v battery.

Main Audio filter

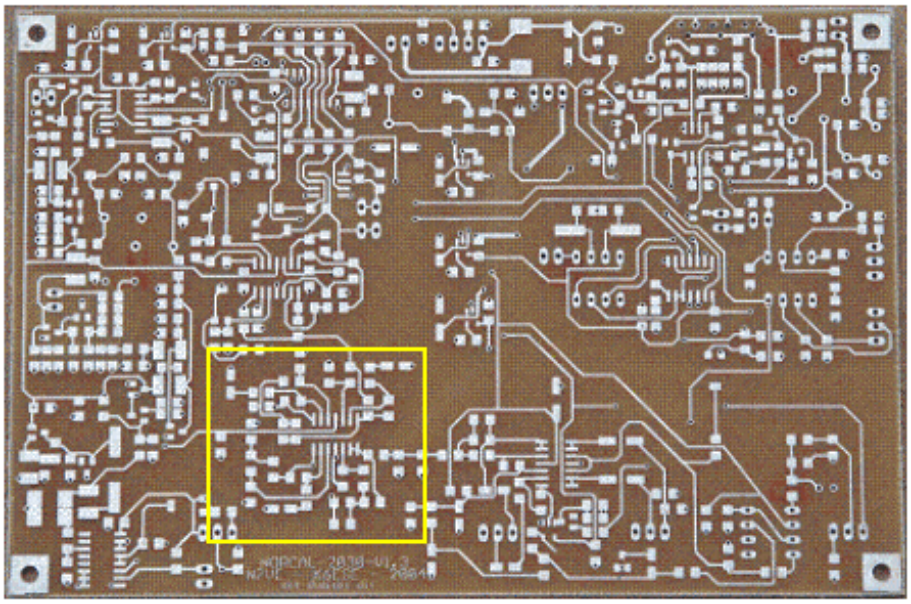

Figure 91. General location of the Audio 750 Hz LPF

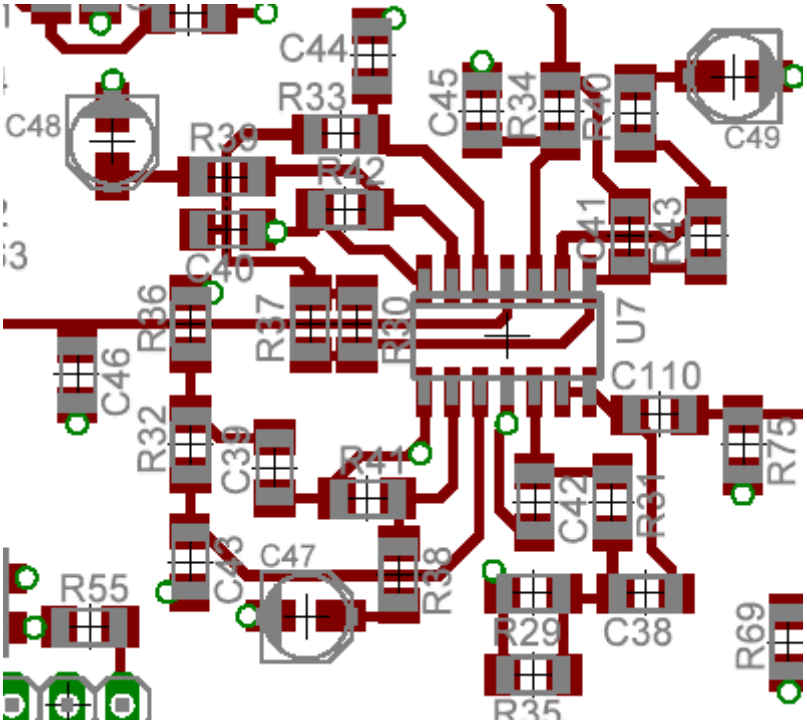

Figure 92. Close up of the 750 Hz Audio LPF section

Install the components in the following order:

U7 - **TLV2464** - ***Caution! Make sure the part is installed with the proper polarity as shown below. Solder one pin, then double check the orientation before finishing.***

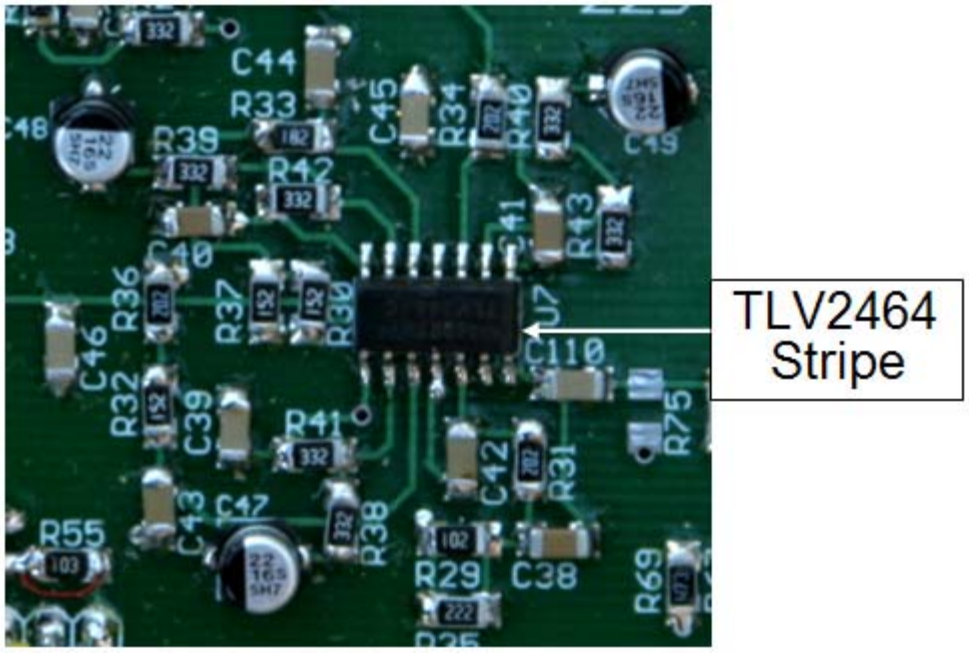

Figure 93. Component placement and alignment of U7 and polarization of caps C47, C48, C49

Some of the component placements are somewhat confusing. Refer to the above for resistor placements.

R29 - **1K**
R30 R32 R37 - **1.5K** ***(note: R30 & R37 are next to each other)***
R33 -**1.8K**
R31 R34 R36 - **2K**
R35 - **2.2K**
R38 R39 R40 R41 R42 R43 - **3.3K**

C39 C45 C46 - **0.1 uf**
C42 C43 C44 **- 0.15 uf**
C38 C40 C41 - **0.22 uf**

C47 C48 C49 – **22 uf** - ***Caution! Make sure the part is installed with the proper polarity as shown above.***

Main Audio Filter Tests

Apply 9v.

Check the input 3.3v to the board to make sure it is ok.

Check the 5-8v input to the board to make sure it is ~7v.

Check all four corner pins of U5 - TLV2464. They should all be at ~ 1.5v

Connect the headphones and turn up the volume. The static hiss out of the receiver should be quite loud. The level pf this hiss will significantly reduced when the receiver is tuned up later. You should be able to vary the SCAF filter pot and hear the audio bandwidth of the hiss change.

In addition, the audio may have a feedback "howl" at the highest audio gain setting. This will also go away as the receiver is tuned up in later sections. If the howl is at almost all gain settings, the 3.3v input is probably way low (like 2v) and the voltage regulators are no longer providing the inter-stage isolation that happens when they regulate. A low voltage is due to high current drain and usually means an IC was installed backwards.

Disconnect the 9v battery.

Transmitter

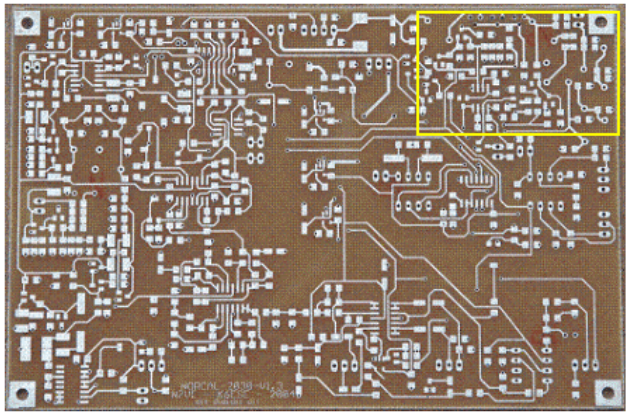

Figure 94. General location of the Transmitter section

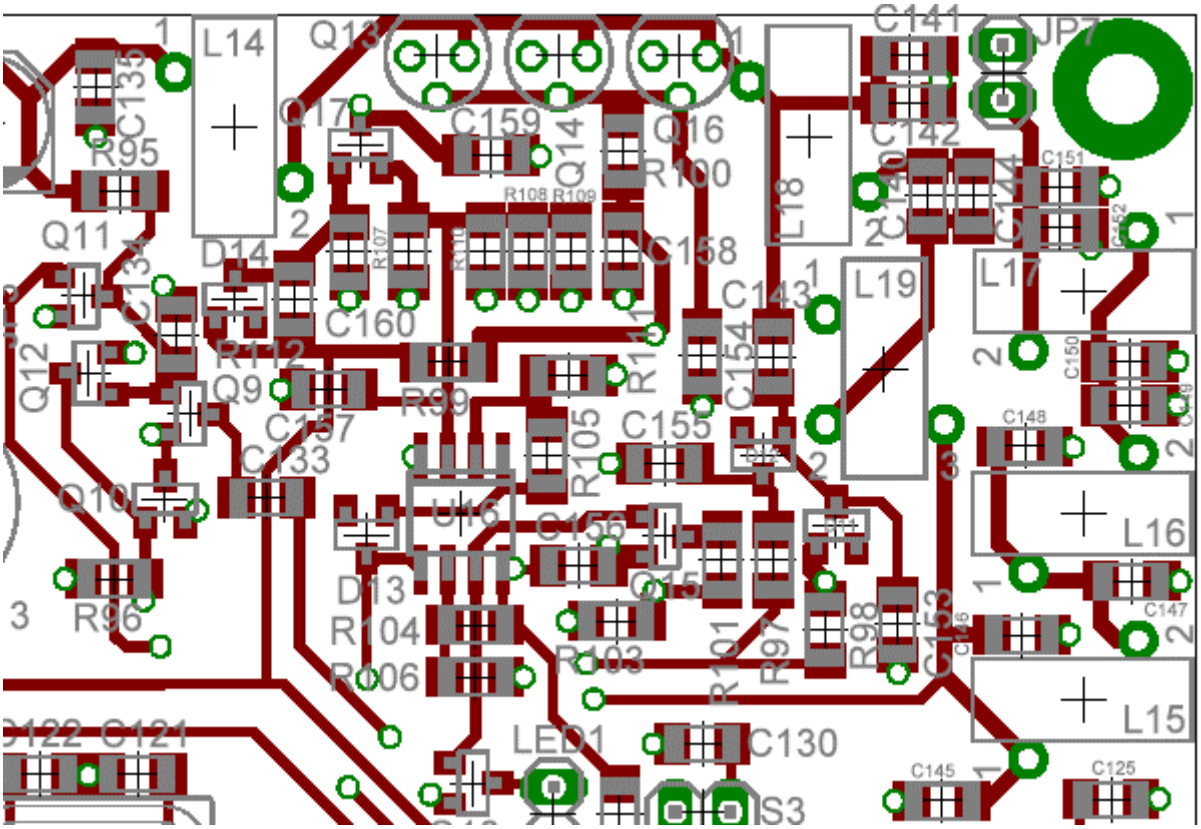

Figure 95. Close up of the transmitter section portion

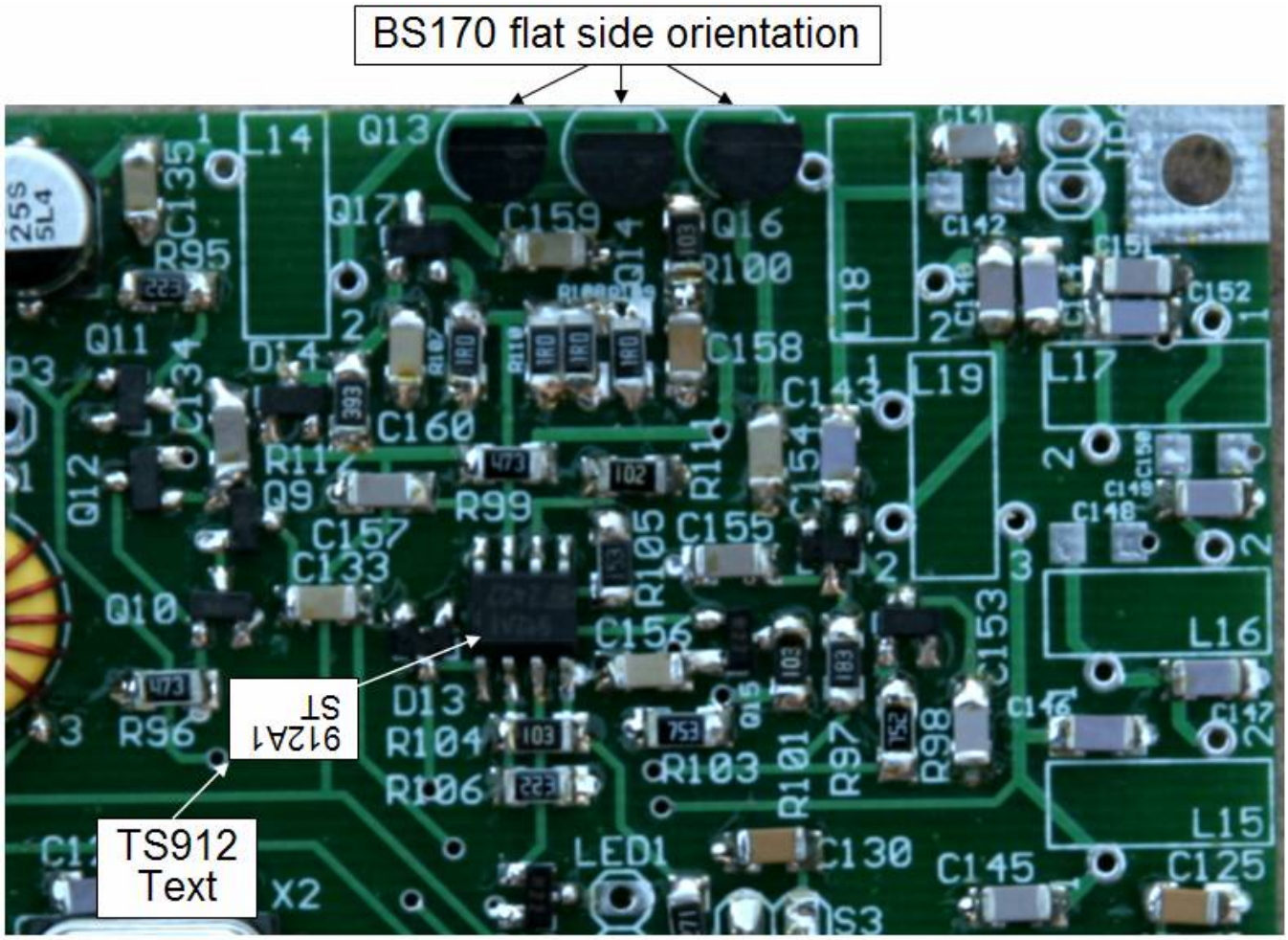

Figure 96. All transmitter parts except for the inductors. Note TS912 orientation, BS170 flat side orientation.

Install the parts in the following order:

Some of the component placements are somewhat confusing. Refer to the above for resistor placements.

U16 - TS912 - 8 pin SOIC dual op-amp – ***Makes sure U16 is installed with the correct polarization as shown above. Solder one pin, then double check the orientation before finishing.***

R107, R108, R109, R110 – 1 ohm resistors. All four of these resistors are next to each other with C158 on the right side and C160 on the left side.
R111 - 1K
R98 - 7.5K - ***Double check parts placement with photo***
R100, R101, R104 - 10K
R105 - 15K
R97 - 18K – ***Double check parts placement with photo***
R95, R106 - 22K
R112 - 39K
R96, R99 - 47K
R103 - 75K

Q9, Q10, Q12 - BSS123 MOSFET switch
Q11, Q15 - FJV3102R

Q17 - FDN335 MOSFET power switch

D11, D12, D13, D14 - MMBD4148

C143 - 5 pf, 5%
C153 - 22 pf, 5%
C134, C155, C157 - 1000 pf
C158 - 0.01 uf
C133, C154, C156, C159, C160 - 0.1 uf

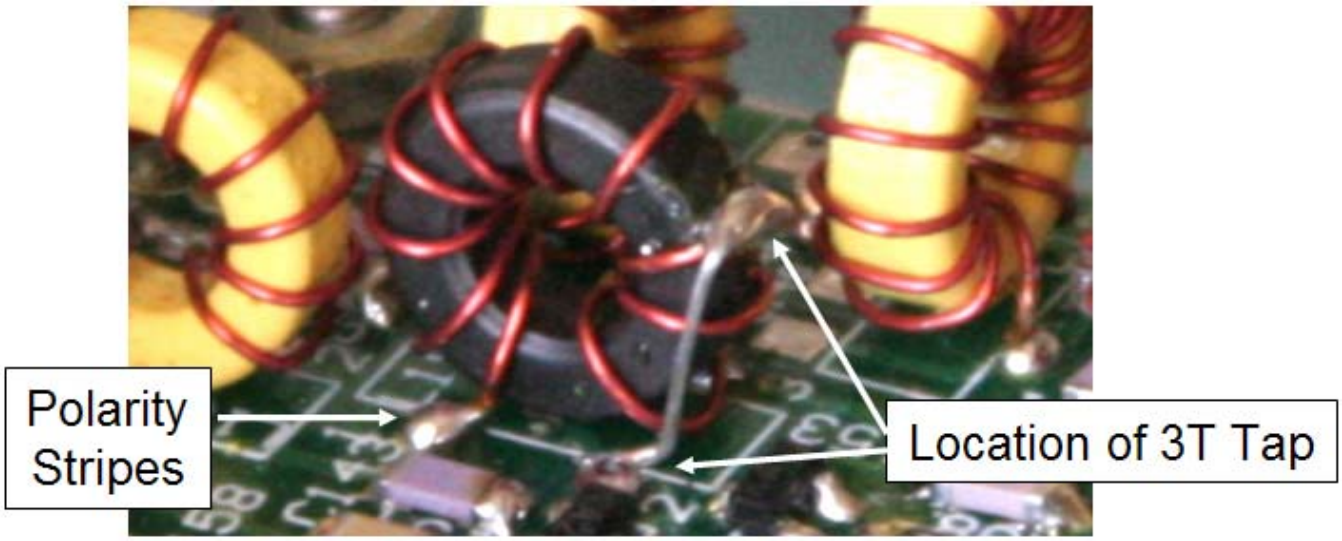

Figure 97. L19 mounted. 3T tap location shown.

L19 - FT37-43 3T/7T #24 Tapped – 8" of wire

JP7 - antenna connection

20m only parts:

C146, C152 - 33 pf
C140 – 47 pf
C145, C151 - 100 pf
C141 – 180 pf
C144, C147, C149 - 330 pf

L15 - T37-6 13T #24 - 8" of wire
L16 - T37-6 14T #24 - 8" of wire
L17 - T37-6 13T #24 - 8" of wire
L18 - T37-6 11T #24 - 8" of wire

30m only parts:

C140 - 47 pf
C145, C151 - 180 pf
C141 - 330 pf
C144, C147, C149 - 470 pf

L15 - T37-6 16T #26 - 10” of wire
L16 - T37-6 18T #26 - 10” of wire
L17 - T37-6 17T #26 - 10” of wire
L18 - T37-6 13T #26 - 8” of wire

Common between both bands
Q13, Q14, Q16 - BS170 MOSFET PA transistors

Do not mount L14 at this point in time. We want to test the transmit/receive switch before the transmitter is actually fired up.

Transmitter Tests

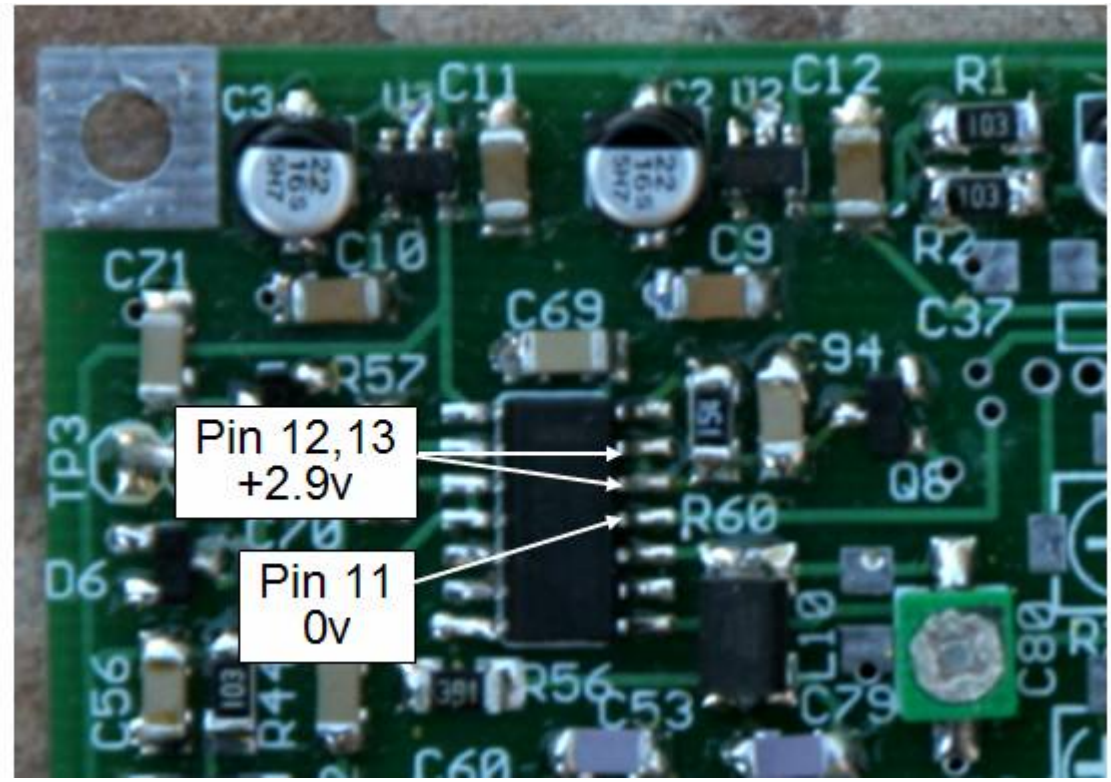

Figure 98. Location of U9 and pins voltages to check. In receive mode, check, U9 pins 11 (0v), 12 &13 (2.9v).

First check U9 (shown above, upper left hand corner of the board) for the 0v on pin 11 and 2.9v on pins 12 and 13. These are digital logic levels, so they might not be exactly 0v or 2.9v.

Hook up a keyer paddle to the paddle jack and adjust the keyer cw speed pot to send a series of very low speed dashes. Since L14 has not been connected yet, there will be no transmitter output, we just want to make sure the transmit signals are working properly. When sending the low speed dashes, make sure the voltages on pin 11, 12, and 13 toggle between 0 and 2.9v.

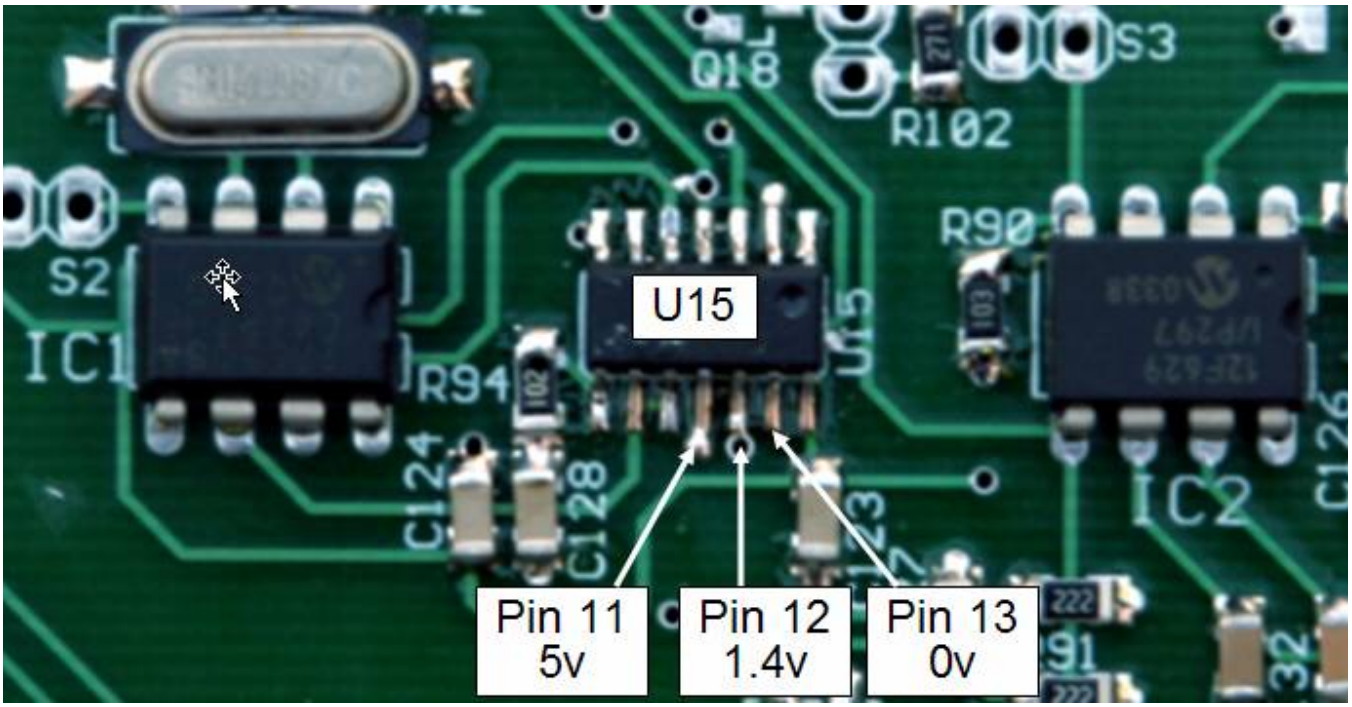

Figure 99. Location of U15 between AFA and Keyer chips. Test pins 11, 12, and 13

In the receive mode, pin 11 is at 5v, pin 12 is at 1.4v (a high frequency square wave), pin 13 is 0v.

When sending a series of low speed dashes, pin 11 will toggle between 5v and 2.5v (2.5v is the PA driver high frequency square wave), pin 12 will stay at 1.4v, and pin 13 will vary between 0 and 2.9v.

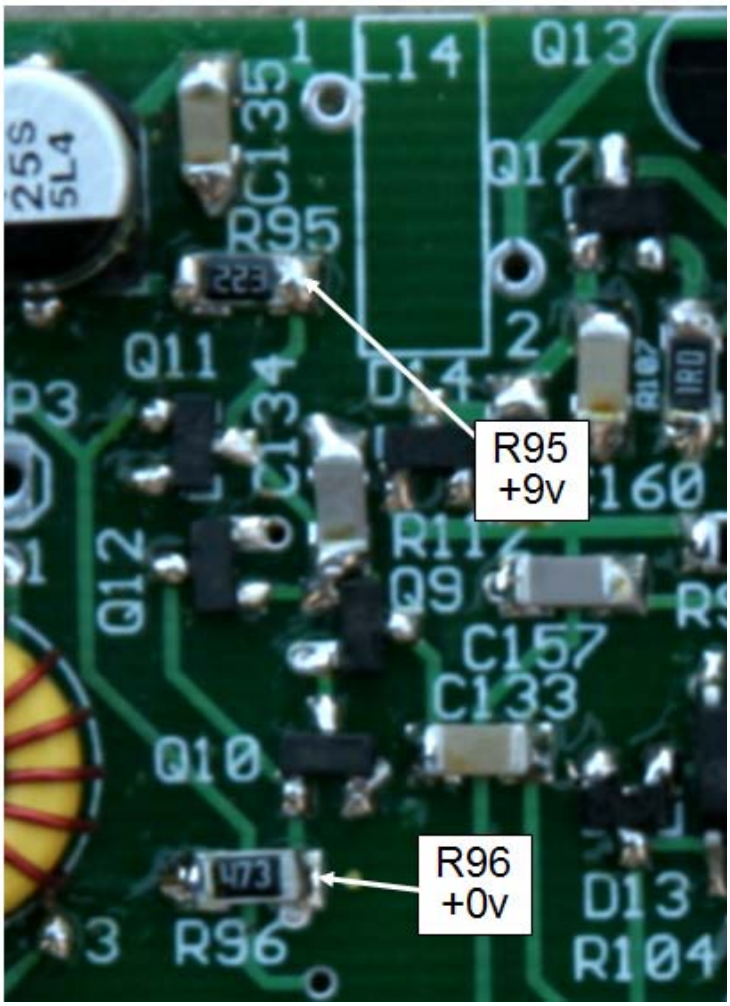

Figure 100. Location of R95 and R96. Voltages on transmit/receive switches

R95 and R96 are in the transmitter section near the not yet mounted L14. In receive, the voltage on the indicated end of R95 is at battery voltage (9v), while R96 should be at 0v.

While sending a series of slow dashes, R95 will alternate between 0 and 9v, while R96 will alternate between 0 and 5v.

If all of these tests pass, all looks well. Install L14.

L14 - FT37-43 10T #24 – 8” of wire

The transceiver is now finished. Time to mount the main board in the chassis and begin alignment.

Disconnect/remove the temporary switching supply connection (four wires) between the main board and the switching supply in preparation to place the PC board in the case.

Mounting into the case

Bolt down the PC board

Transmitter section to the rear side of the case, headphone outputs to the front.

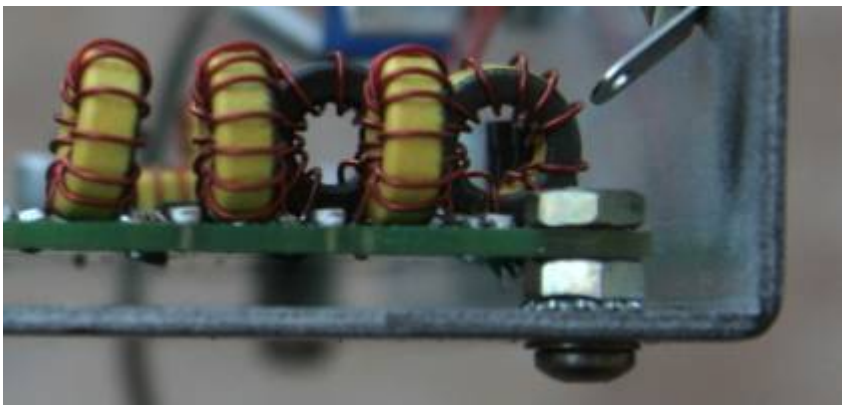

Figure 101. Mount all four corners of the main board using the mounting hardware as shown.

Be very careful when mounting the screws on the particular corner shown above. There is one surface mount cap that is very close to the nut on the top side of the board. Don't knock it off!

Add front panel hardware

Figure 102. NC2030 with all front panel hardware mounted in prototype chassis. Case will be silk screened.

Lots of pictures in this section! Here we will mount the hardware to the front panel.

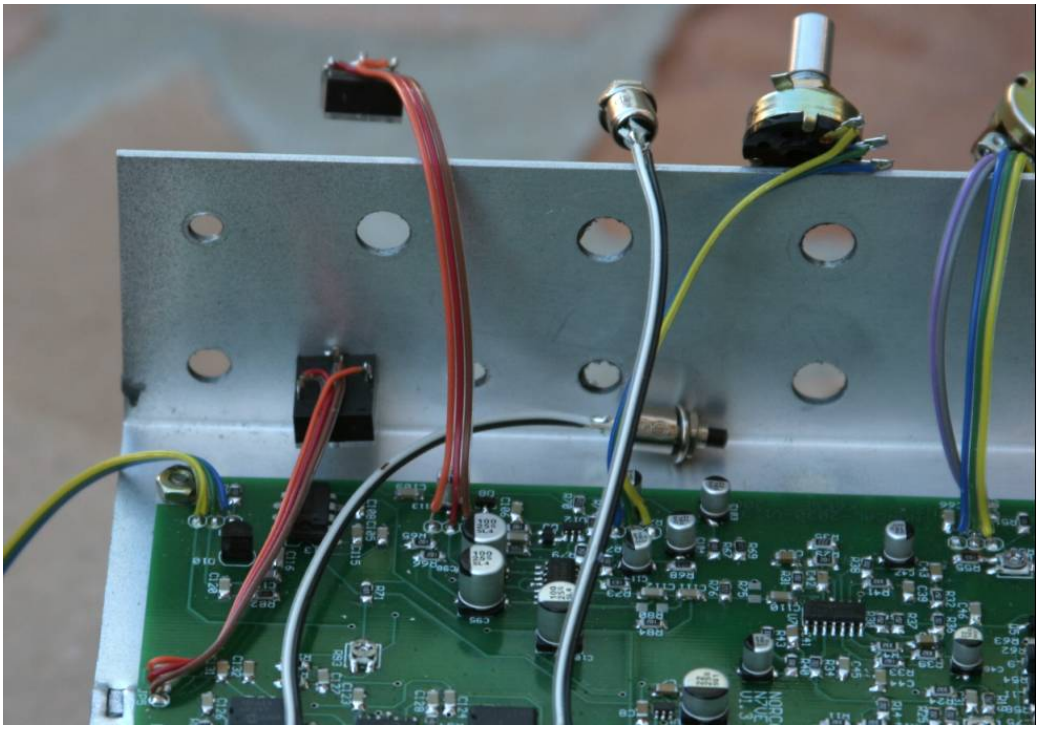

Figure 103. Mount the paddle jack.

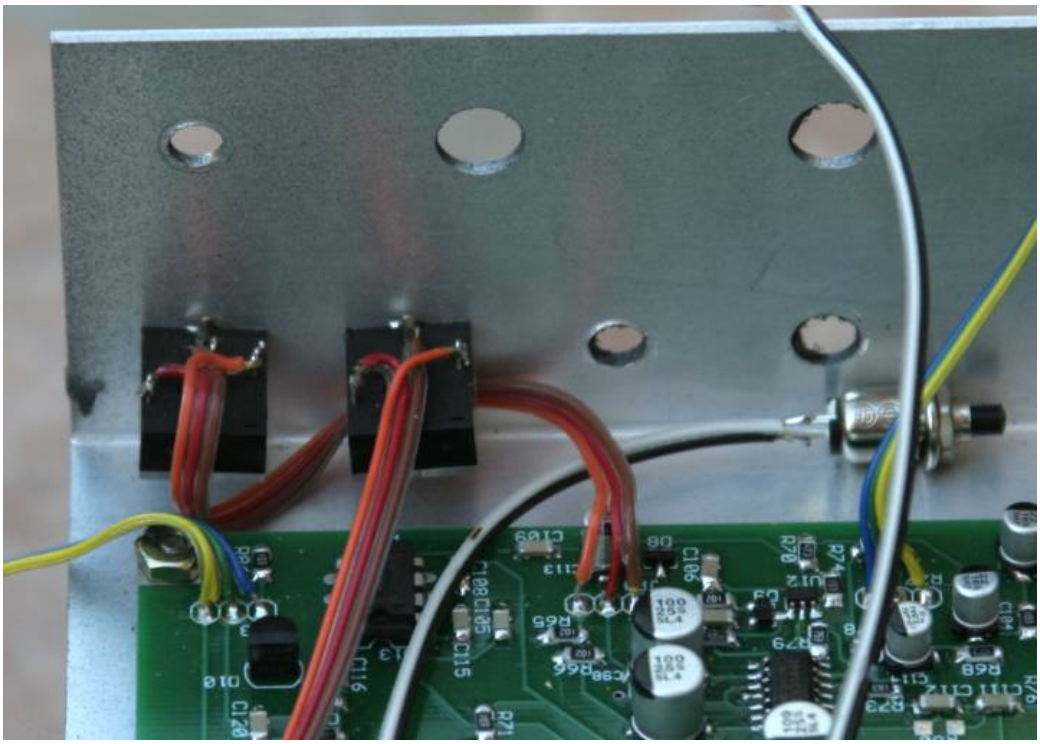

Figure 104. Mount the headphone jack

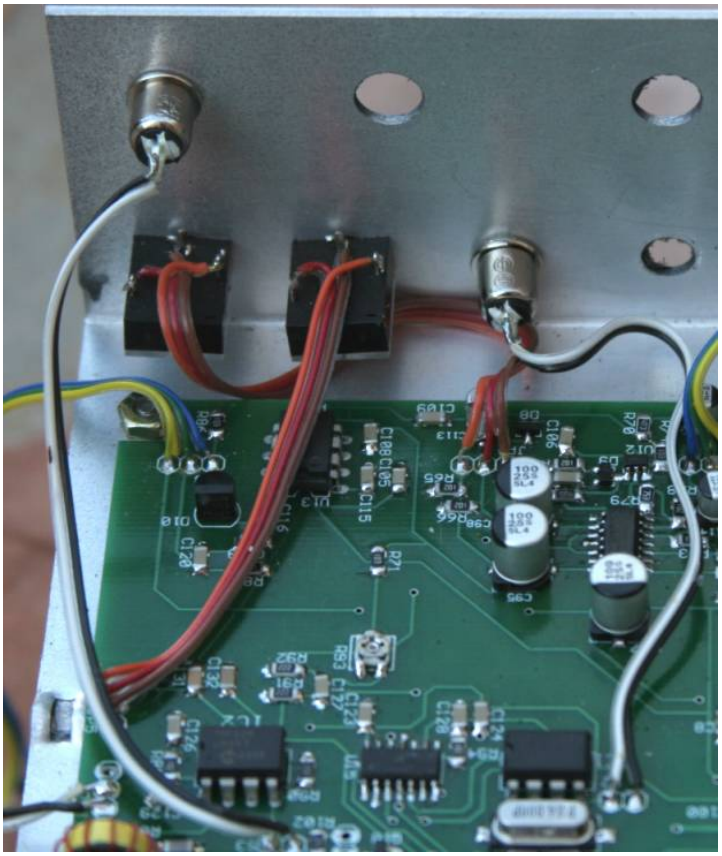

Figure 105. Add Keyer button (upper left), AFA button (lower right)

Figure 106. Mount the volume control pot (upper right) and the spot switch (lower middle).

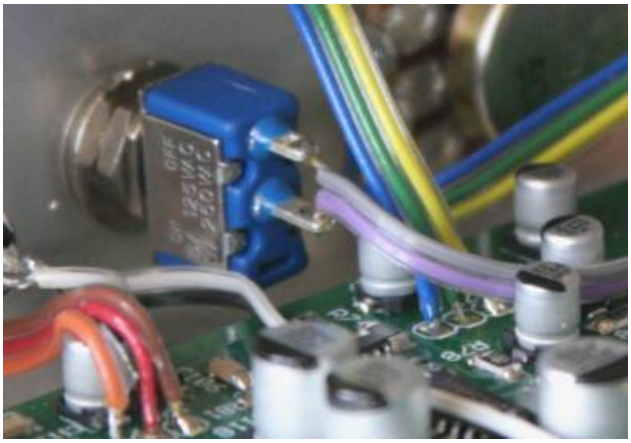

Figure 107. Another view of the spot switch. The two terminals are orientated in the "up" position.

Make sure the spot switch is orientated with the two rear contacts up high, not down low. This way the spot switch is "on" if the lever is down, towards the "Spot" label, and off (the normal position) when the switch is up.

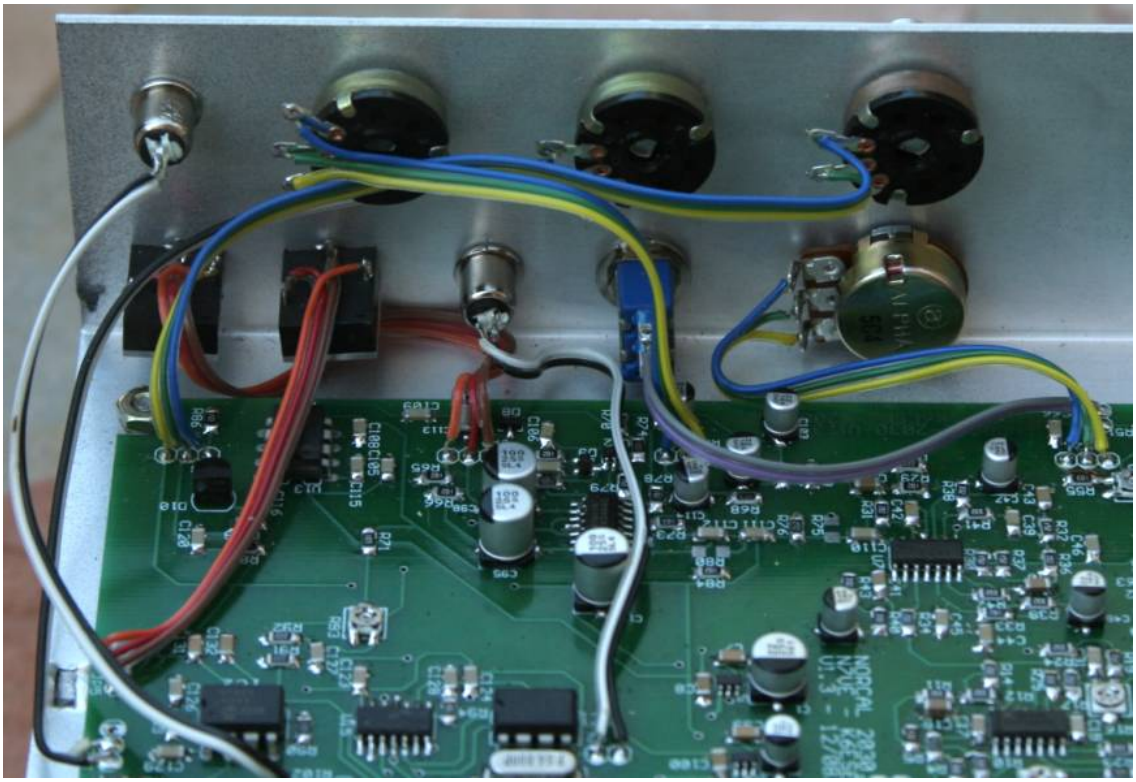

Figure 108. Add keyer speed pot, SCAF Pot, and RIT pot.

Add rear panel hardware

Figure 109. Rear panel of prototype NC2030. Final case will be silk screened.

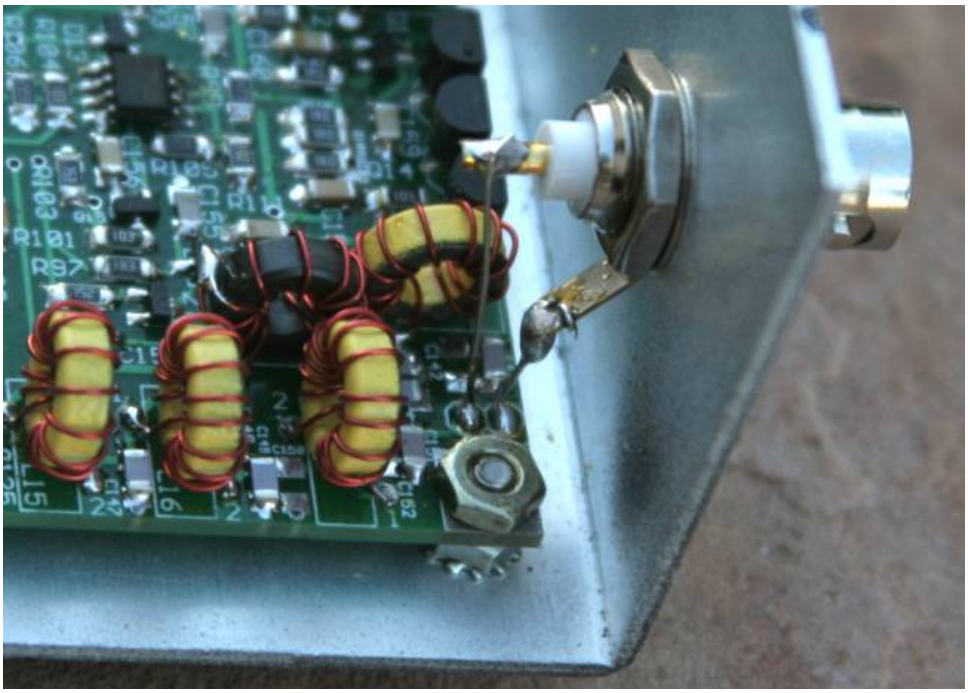

Figure 110. Antenna jack added

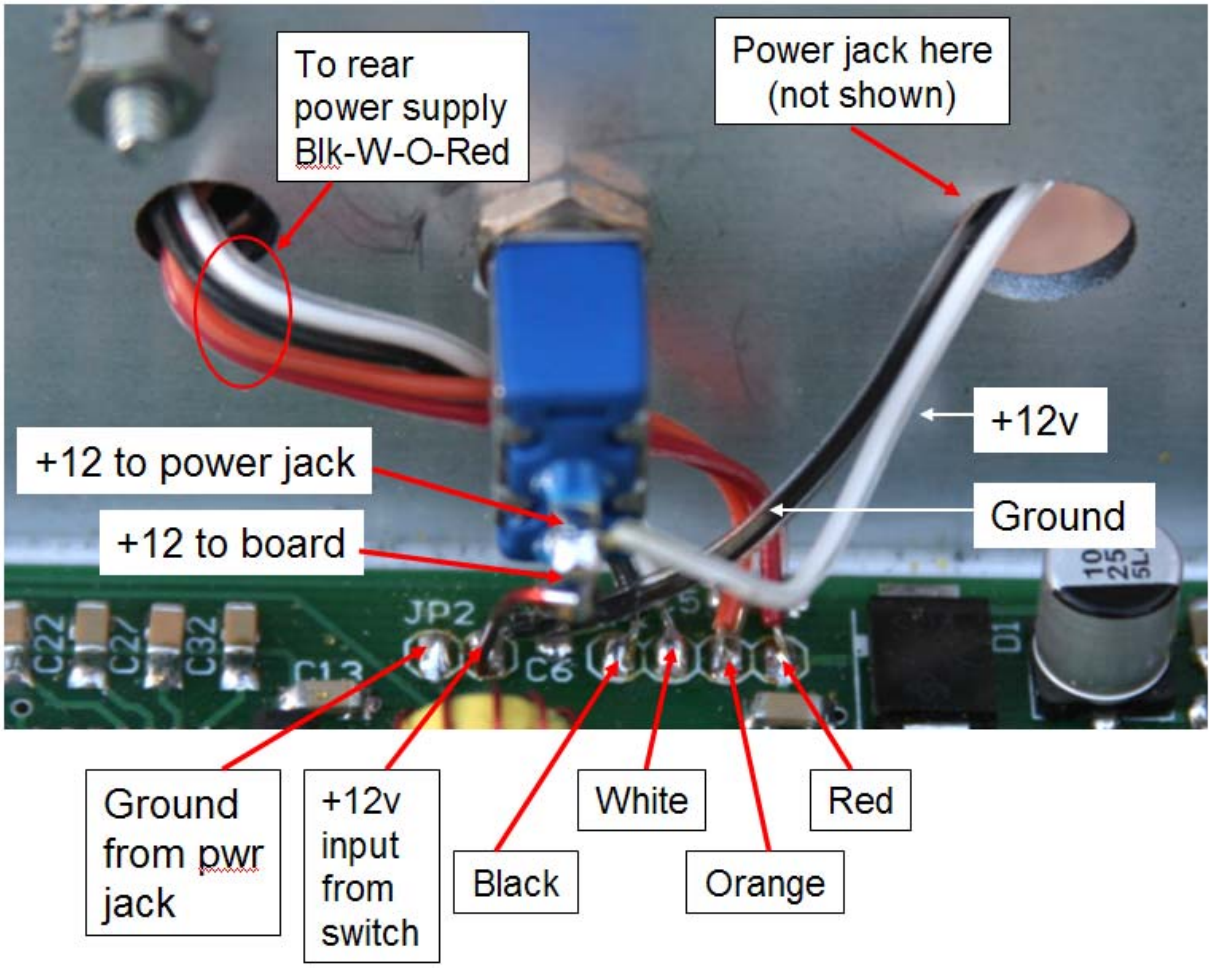

Figure 111. Rear power connections: Power switch, leads to rear switching supply, power jack (not shown)

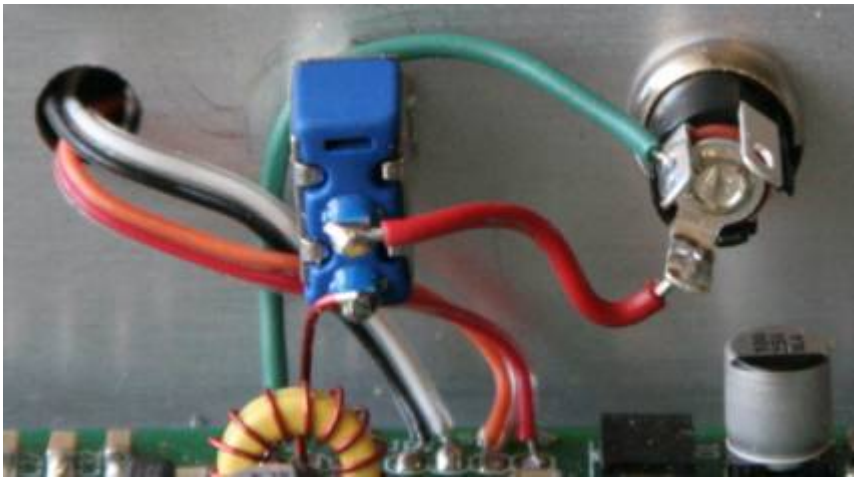

Figure 112. Power jack connections, +12v to power switch (red wire) and ground (green) to JP2 ground pad

The power switch needs to be mounted in the orientation shown with the two terminal in the “low” position. This is necessary so that it matches the rear labeling where the handle in the “up” position is “on”.

These power connections are very important to get right. The four wires to the rear switching supply need to be in the order shown above from right to left, Red, Orange, White, and Black. Double check! Don’t get the order wrong and don’t get the order backwards! Make sure there are no wire strands shorting from one power pad to the next one!

JP2 has two pads, one for +12v, the other for ground as labeled in the picture above. The pad to the right is +12v as shown and goes to the power switch. The left pad is ground and goes directly to the ground lug on the power jack, which is not shown as installed in the above picture. ***Double check! Don’t get the order backwards!***

The radio is diode protected against reverse polarity using a high current, low voltage drop Schottky diode. It does drop the voltage 0.15 to 0.3v, but it is worth the protection.

Figure 113. Placement of the switching supply tin on the back chassis, power jack not installed.

The switching supply tin needs to be mounted on the back side of the radio as shown above. The first step in doing this is placing the switching supply inside the tin, centering it top and bottom, and marking where the two mounting holes need to be drilled in the tin.

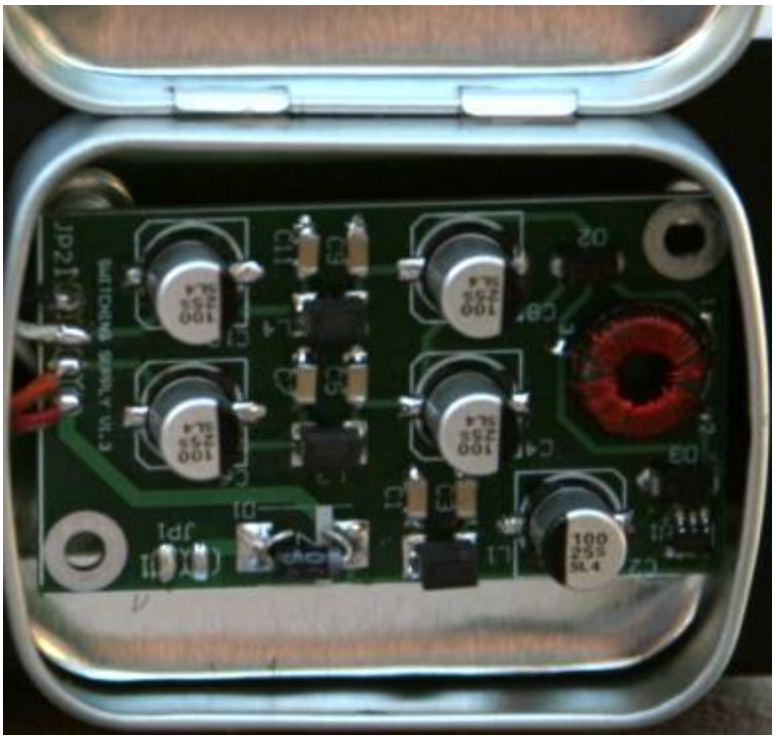

Figure 114. Place the switching supply board in the tin, center it top & bottom, and mark the mounting holes

Drill these two mounting holes in the tin and then mount the tin temporarily to the back. Next, form the inside of the rear panel, mark the hole to be drilled out where the power connections go into the tin from its bottom side. Dismount the tin and drill out the power cable hole. Try to make this hole as smooth as possible to keep from cutting the power cables as they run through this hole.

Next, using the mounting materials, mount the switching supply in the tin using the supplied standoffs, and attach the tin to the back side of the radio. Run the switching supply power cables through the hole and attach them as shown below:

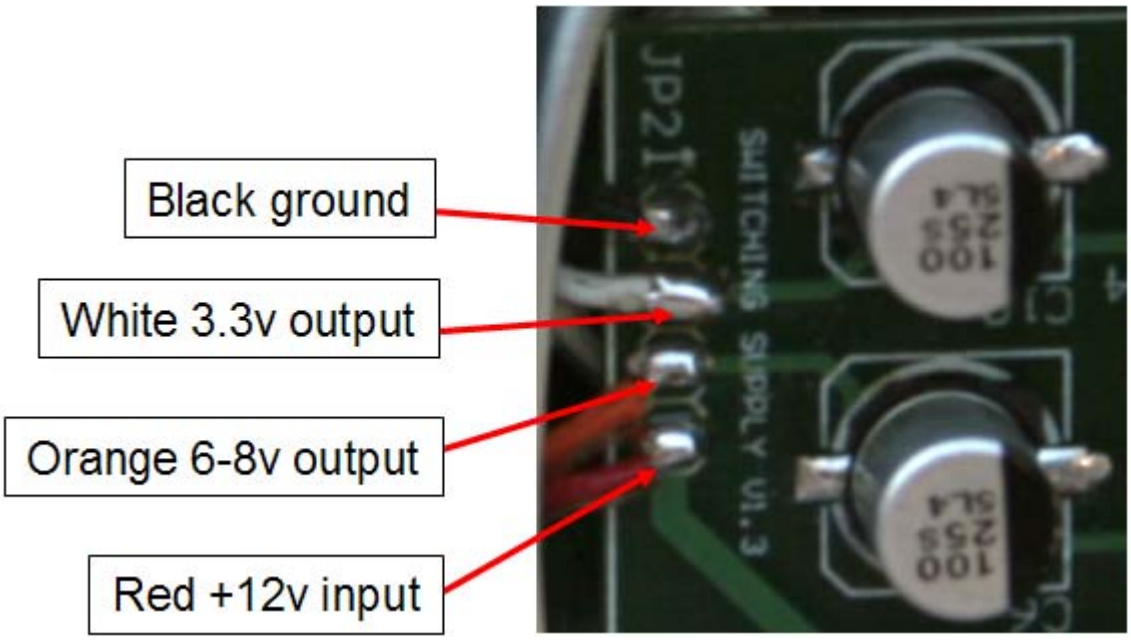

Figure 115. Connect the power wires to the switching supply in the color order shown.

Make very sure the wires are connected in the right order! Make sure there are no wire strands shorting from one power pad to the next one!

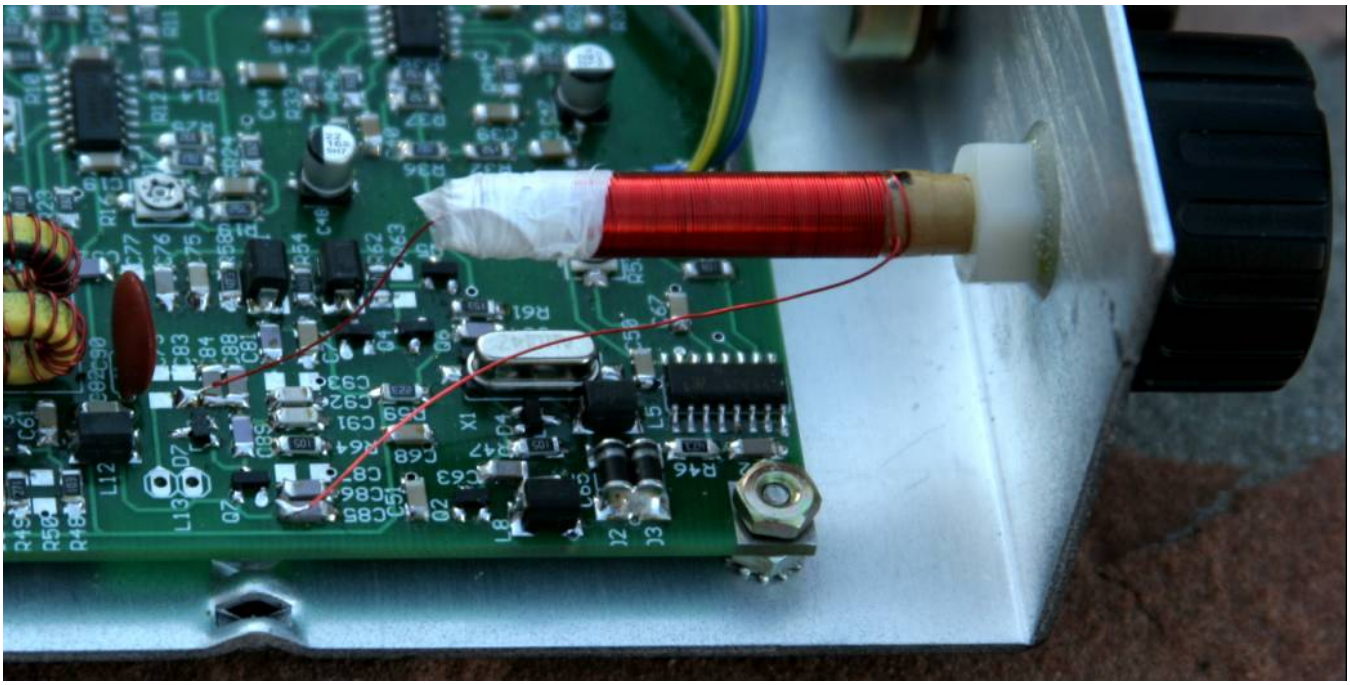

Figure 116. PTO L13 mounting detail. Coil connections shown. Front PTO coil wire must connect as shown.

The last component installed is the PTO coil. This coil was wound with extra turns so that the frequency can be trimmed by removing turns.

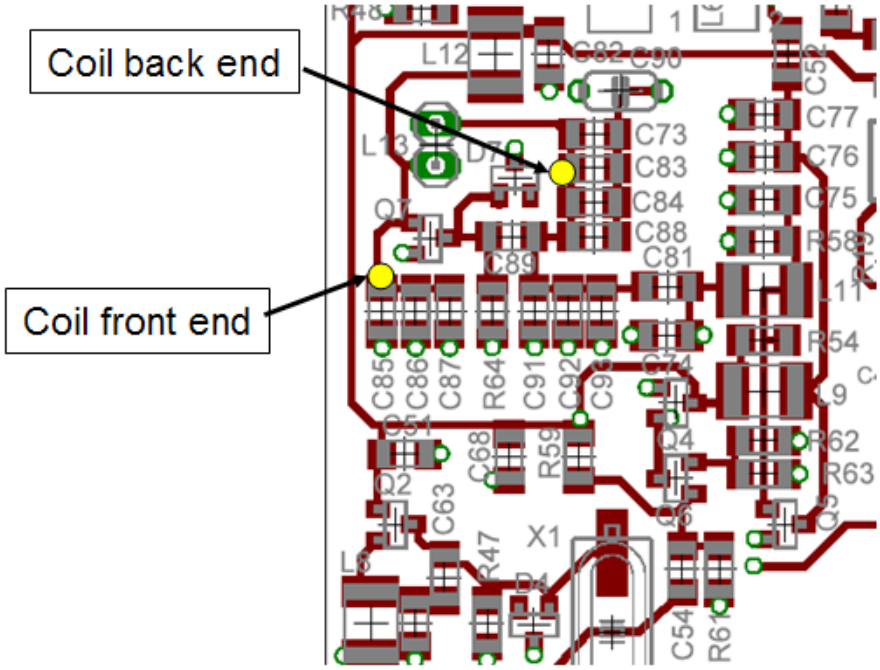

Figure 117. Connections for the PTO coil L13.

Coil wire connection order is important! The coil is set up with the back end being RF hot. Connect as shown above. When connecting L13 to the board, make sure the front end of the coil is connected as shown. The PTO oscillator circuit has a RF hot end and a RF cold end of L13. If we make sure the RF "cold" end of L13 is at the front panel, hand capacitance effects on the tuning of the receiver are not noticeable. There are pads provided for L13, but the above attachment points are a bit closer as the connections to L13 are a bit of a stretch as it is.

New instructions: The hardware for the PTO coil now includes a thick nylon nut on the back side and a thin metal nut on the front side. The pictures in this section show the coil as being glued front and back with no front nut used. Even with the front nut in place, glue may be useful. ***Do not over tighten the two nuts as the PTO coil form may break!***

Old instructions: The PTO coil with nylon nut will be epoxy glued to the front panel. In preparation for this mounting, use coarse sandpaper to rough up the front side of the nylon nut and the back side of the front panel that the PTO will be glued to.

Figure 118. Front side of the PTO coil (prototype chassis) showing epoxy ridge from the front side

Figure 119. Tuning knob with PTO screw partially inserted.

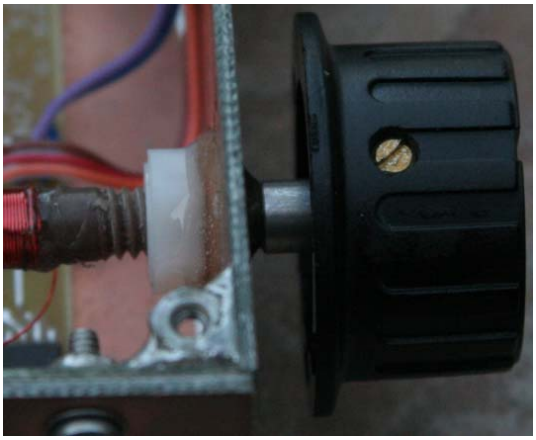

Figure 120. PTO brass screw full inserted into the PTO coil

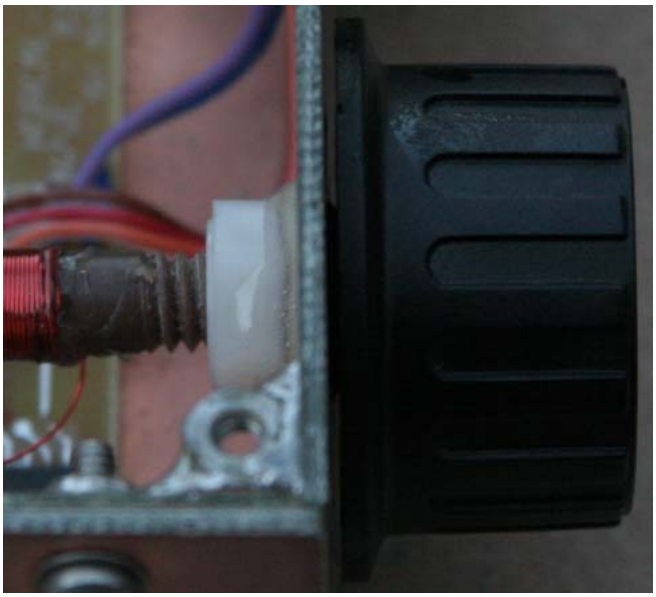

Figure 121. With PTO screw fully inserted, adjust tuning knob to have a small amount of front panel clearance.

Receiver alignment section

LO Filter tune up

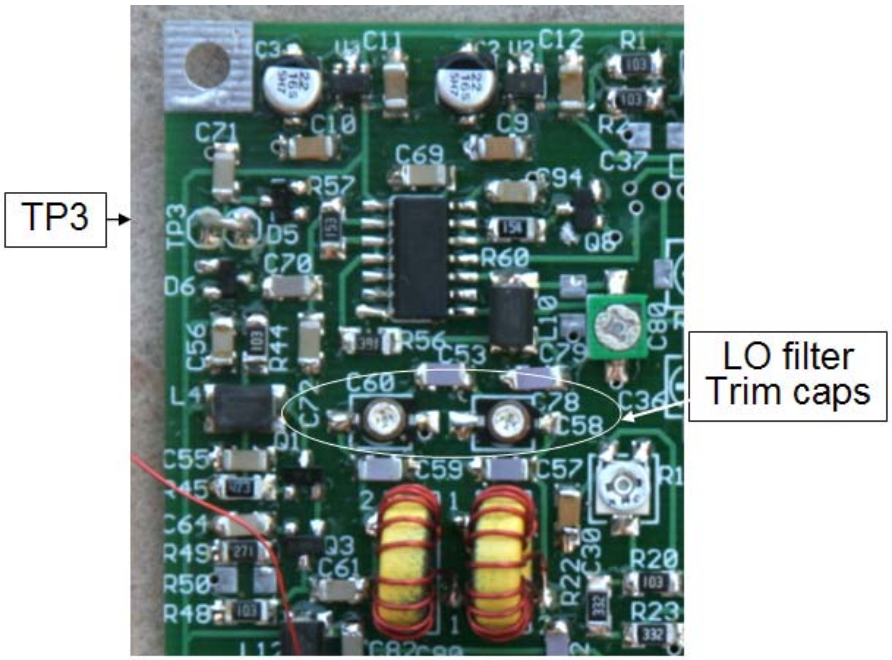

Figure 122. Location of LO trim caps C58, C60 and TP3 in the upper left corner of the board

This has already been done one using the soda straw version of the L13 PTO coil. We will repeat that previous step now using the final PTO coil.

The goal is to get a voltage between 1 and 1.5v DC across the entire band at TP3 after we have the PTO set to the final frequency. That has not been done yet, so the peaking being done here is simply to provide a signal to the internal AFA frequency counter so that we can start moving the PTO to its final frequency.

The LO filter section is composed of two tuned circuits, one tuned by C58 and the other tuned by C60. The voltage is measured at TP3 using a normal voltmeter on a low voltage range such as a 2 or 3v scale. Although variable capacitors C58 and C60 can be turned over a 360 degree range, the actual tuning range is done over a 180 range. Turning these capacitors over a 360 degree range simply makes the variable capacitors pass through their tuning range twice.

What will be done here is to move C58 a fraction of a turn (roughly 1/10th), then sweep C60 through its tuning ranging looking for a peak, then go back to C58 and turn another fraction and try again. Once a peak is found, adjust both C58 and C60 for the best peak. C60 is the more critical setting of the two caps, so be sure to do tuning sweeps with C60 and incremental changes in C58.

The peak at this point may not be in the 1 to 1.5v range. There are gain adjustment resistors that will get added in either the mixer or the LO amp section or both to bring the detected voltage up to the needed range.

PTO Frequency Alignment

Having found the LO filter peak above, it is time to tune the PTO. It is likely that the PTO is not on the right frequency at this point, but rather a bit low in frequency.
Press the AFA button and hold it down. It should cycle through “E” “L” “F” “ER” “LR” “FR” and then repeat the sequence again at a slower speed. Stop at “L”, the “long” frequency readout mode. The AFA should send the entire frequency down to the 1 Hz granularity. 14.060 MHz would be read out as “14 R 060 R 000

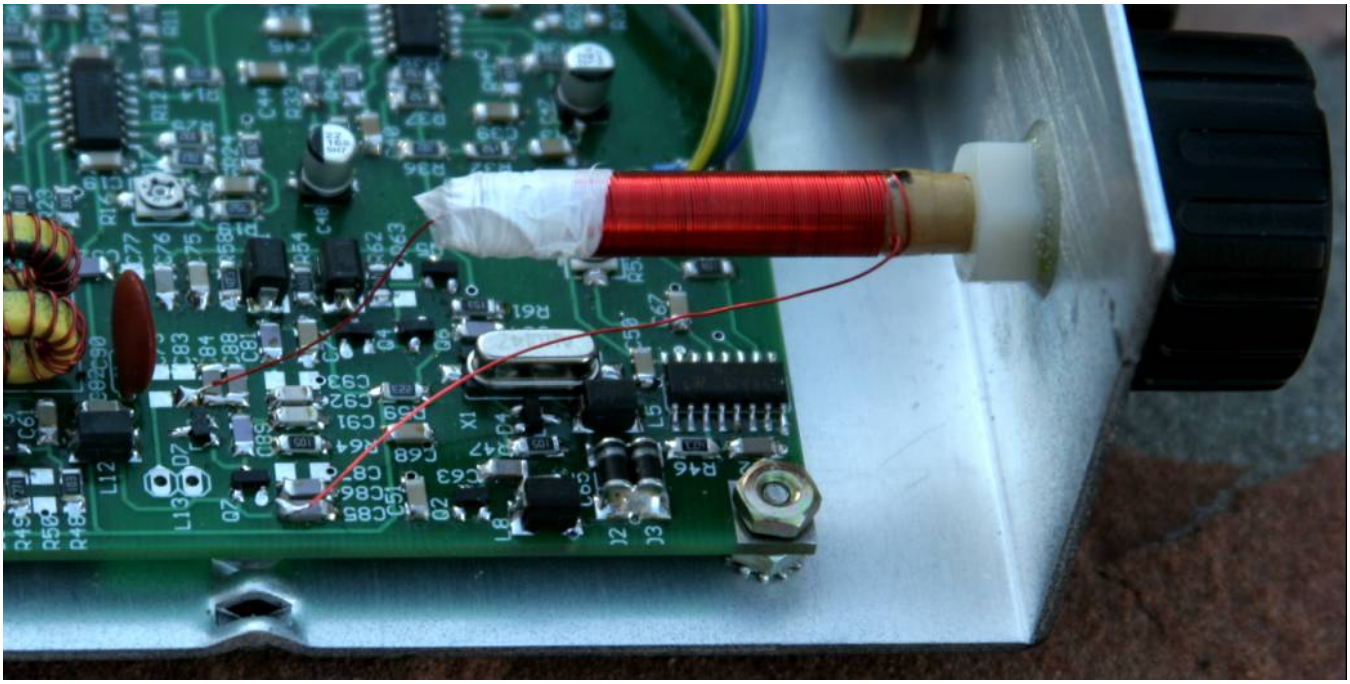

Figure 123. L13 PTO tuning coil as mounted. Remove turns off the end simply by pulling on the wire.

PTO tuning for the 20m version (2.941 to 3.006 MHz)

With the PTO tuned so that the tuning knob is flush with the front panel (all the way in), press the AFA button and read the entire frequency using the “L” frequency mode. It will likely start out around 13.9 MHz rather than the desired target of 14.065 MHz when the tuning knob is all the way in. ***Let me repeat this again, on the 20m version, the tuning knob all the way in should correspond to roughly 14.065 MHz.*** Since the PTO was wound with too many turns, the frequency should be to low (LO frequency = 11.059 MHz + PTO). The PTO is tuned to the correct frequency simply by removing turns.

Warning: Adding the cover to the receiver will increase the final LO frequency by about 2 KHz.

Removing one turn will raise the frequency by approximately 10 to 12 KHz. Remove a few turns, shorten the removed wire and resolder it, then recheck the tuned frequency. Repeat as needed. When you are within 30 KHz, remove only one turn at a time. Within 10 KHz, you may want to remove only a part of a turn at a time.

As the PTO is shifted, the LO filter (C58 and C60) will need to be repeaked. It may not be possible to set the PTO to exactly 14.065 MHz as the high side limit, so a result in the 14.064 to 14.070 MHz may be good enough.

PTO tuning for the 30m version (2.850 to 2.900 MHz)

With the PTO tuned so that the tuning knob is flush with the front panel (all the way in), press the AFA button and read the entire frequency using the "L" frequency mode. It will likely start out around 10.2 MHz rather than the desired target of 10.100 MHz when the tuning knob is all the way in. ***Let me repeat this again, on the 20m version, the tuning knob all the way in should correspond to roughly 10.100 MHz.*** Since the PTO was wound with too many turns, the frequency should be too high (LO frequency = 13.065 MHz - PTO). The PTO is tuned to the correct frequency simply by removing turns.

Warning: Adding the cover to the receiver will ***decrease*** the final LO frequency by about 2 KHz.

Removing one turn will lower the frequency by approximately 10 to 12 KHz. Remove a few turns, shorten the removed wire and resolder it, then recheck the tuned frequency. Repeat as needed. When you are within 30 KHz, remove only one turn at a time. Within 10 KHz, you may want to remove only a part of a turn at a time.

As the PTO is shifted, the LO filter (C58 and C60) will need to be re-peaked. It may not be possible to set the PTO to exactly 10.1000 MHz as the low side limit, so a result in the 10.098 to 10.095 MHz may be good enough.

Mixer/LO Amp Gain selection

Press the AFA button and hold it down. It should cycle through "E" "L" "F" "ER" "LR" "FR" and then repeat the sequence again at a slower speed. Stop at "L", the "long" frequency readout mode. The AFA should send the entire frequency down to the 1 Hz granularity. 14.060 MHz would be read out as "14 R 060 R 000".

After the PTO has been set to the proper frequency, the LO filter C58 and C60 need to be re-peaked in the middle of the band. These are peaked by measuring the voltage at TP3 as done previously in the LO filter alignment section above. The measured voltage should be above 1v across the entire tuning range of the band. Ideally, it should be in the 1v to 1.5v range. If the measured voltage is lower than 1v anywhere across the band and the filters cannot be repeaked to fix this, there are two LO gain boosts that can be done to move the voltage at TP3 into the right range.

Too much voltage is just as bad as not enough voltage when feeding the 74AHC00 gate used to square the buffered RF voltage up to a 3v square wave. Too much drive can cause the waveform to be non-symmetrical (not 50% high and 50% low), while too little drive can raise the noise floor of the receiver by introducing excess phase noise in the conversion process. We do not want to add any of the following gain improvements unless they are needed.

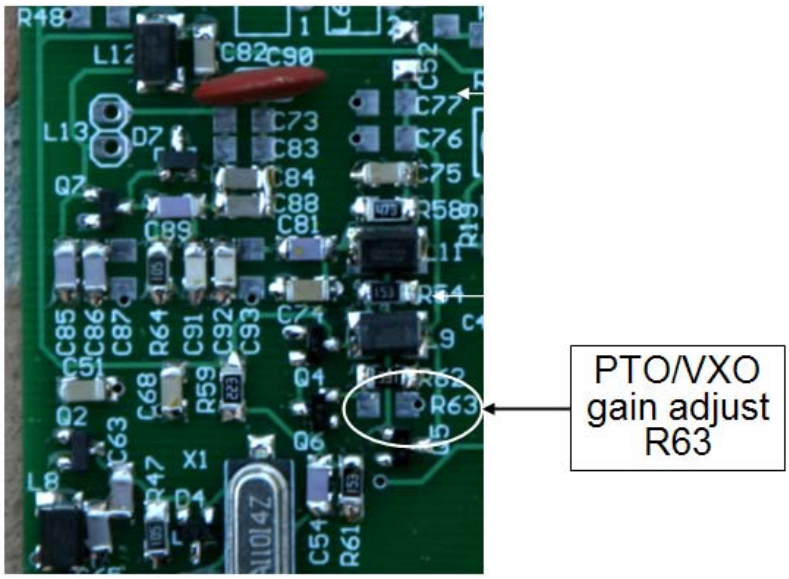

Figure 124. Location of R63, PTO/VXO mixer gain adjust located in bottom left corner of board

If the voltage is too low, start by adding R63, (390 ohms – see above picture). See the LO mixer and PTO section above for the parts placement. This change will provide a stronger VXO/PTO mixer output to the input of the LO filter. Again, the TP3 measurement should be made across the band re-peaking the LO filter caps C58 and C60 peaked for maximum voltage at TP3 mid band. If the voltage is now in the 1 to 1.5v range, we are done.

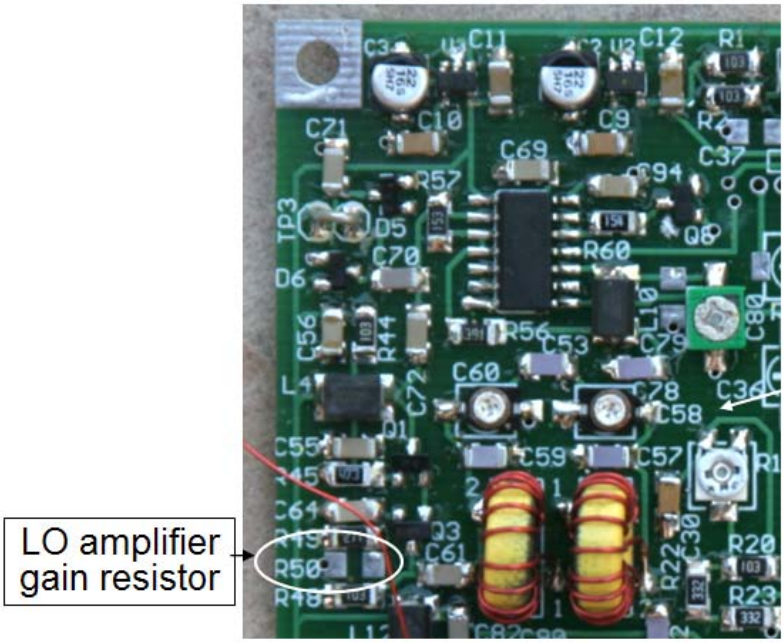

Figure 125. Location of optional LO amplifier gain adjust resistor R50

If the voltage is still too low, add R50 (270 ohms – see above picture). See the LO filter and LO Amp section above for parts placement. This change adds more gain to the amplifier/buffer on the other side of the LO filter. At this point, repeak filter caps C58 and C60 peaked for maximum voltage at TP3. At this point the voltage at TP3 will be in the correct range.

RF front end tune up

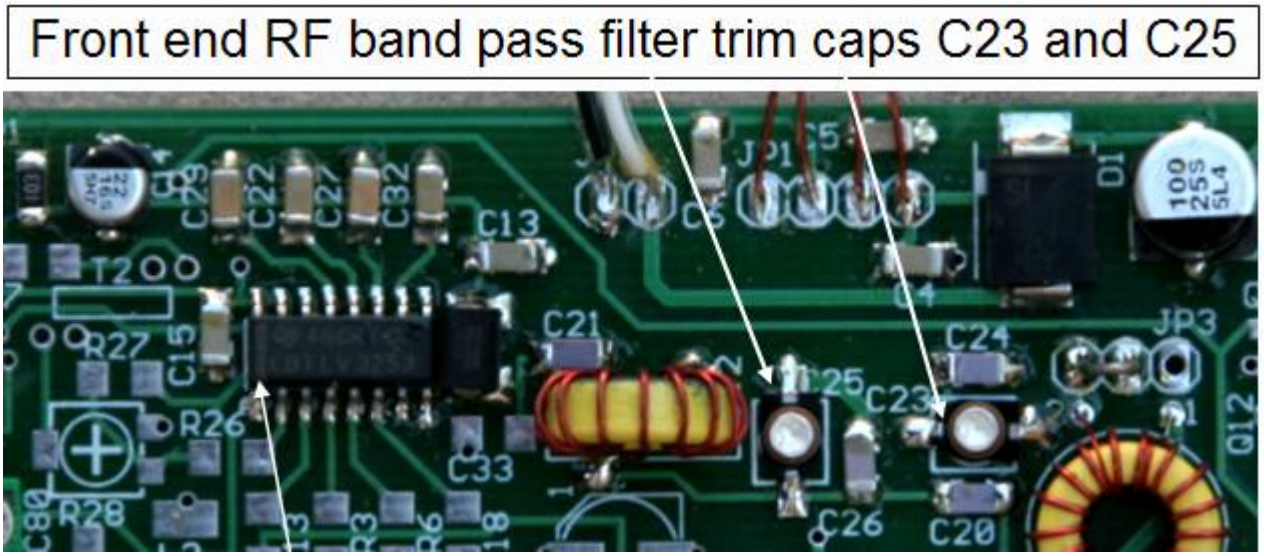

Figure 126. Location of RF front end band pass filter adjust trim caps, C23 and C25 on top middle of the board

With a relatively strong signal into the front end of the receiver (-80 to -90 dbm), tweak trim caps C23 and C25 for the strongest signal. You will have to go back and forth between the two trim caps several times to get the best response. This peaking should be done in the center of the band.

The use of an AC volt meter and a signal generator are the best way to do this, but it can also be done using “on-the-air” signals. Other frequency sources that could be used include the Elecraft XG2 receiver test oscillator or a harmonic marker generator such as the old VE3DNL marker generator that Norcal used to sell. One caution: The audio output needs to be kept low enough to keep it from limiting. If the audio is in limiting (0.28v pk-pk or higher), the proper peak might not be seen. Turn down the audio volume as needed.

Opposite sideband suppression

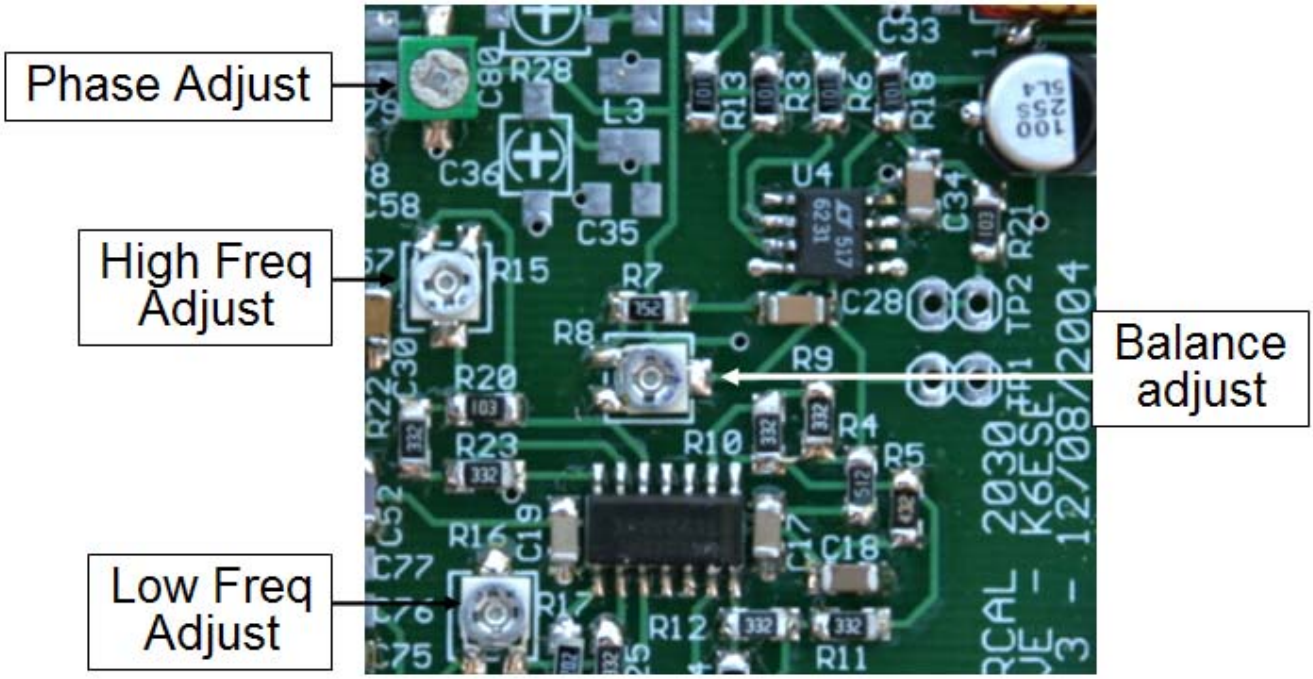

Figure 127. Adjustment points for nulling out the opposite sideband

The adjustment is very straight forward. First a strong, steady signal source is required. Some examples of signal sources are:

- A RF signal generator. For this purpose, a setting of –50 dbm is ideal.
- A crystal oscillator loosely coupled into the front end (1 to 2 pf in series). QRP crystals are available from a number of sources including Norcal.
- A marker generator such as the one available from Norcal.
- A QRP transmitter transmitting at minimum power into a dummy load produced a very strong signal that can be readily picked up using a 1 inch "sniffer" stub of wire connected to the antenna port of the NC2030. ***DO NOT TRANSMIT DIRECTLY INTO THE FRONT END OF THE RECEIVER!***
- Over the air signals can be used, but these are usually neither strong nor consistent.

Before the alignment is started, listen to the signal on both sidebands. The weaker sideband will be the USB signal that we are going to suppress. When we first start, it will not be weaker by very much. Tune the receiver back and forth and try to place the signal in the middle of the audio pass band. This will be at about 550 to 600 Hz.

Next, adjust the phasing adjustment trim cap to null out this signal as much as possible.

If you find that you cannot get much of a null, you are very likely listening to the lower side band signal rather than the upper sideband signal. Tune the signal through zero beat to the other sideband and try again.

Next adjust the balance pot to further null out the signal as much as possible. The balance pot setting should not be moved very little from its center position.

Go back and forth between the phase and the balance adjustment several times to get the best possible null for this center audio frequency. After a few passes, the null ought to be very sharp.

At this point, with the last two adjustment pots at their mid range setting, the overall rejection ought to be at least 35 db and you should hear a very distinct difference between the desired LSB sideband and the phase canceled USB sideband. However, we are not yet finished tuning up the USB image rejection.

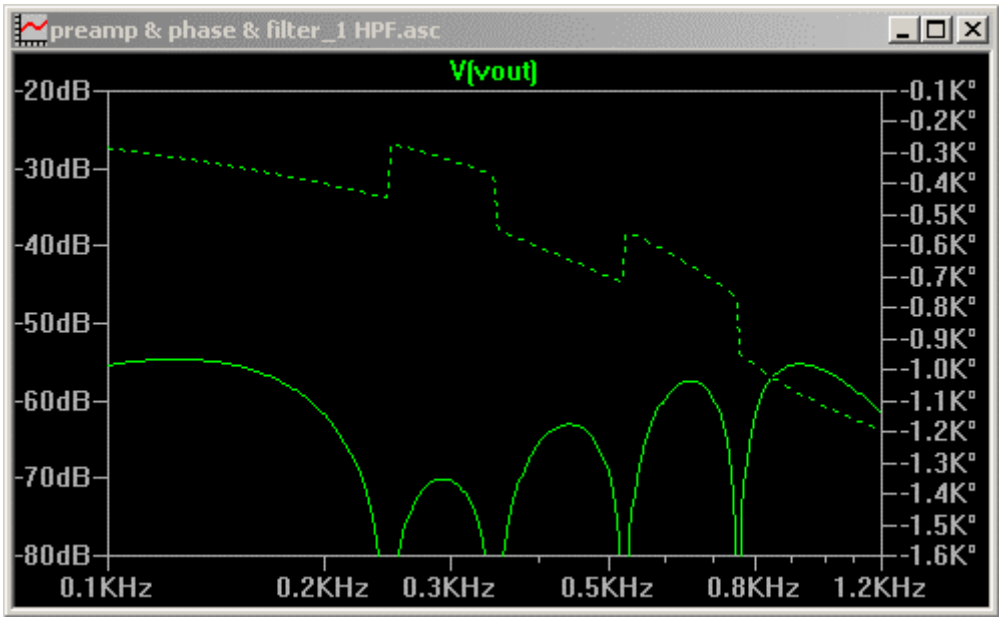

Figure 128. Picture of simulated opposite sideband rejection when optimally tuned up.

Now, from this center frequency tune to a lower audio tone. On the low end, the audio starts to roll off below 400 Hz, so sweep the receiver around this low tone area and find the audio peak. Now adjust the low adjustment to null out the low frequency.

Now tune the audio tone to a high frequency audio tone in the audio pass band. Sweep the receiver around this upper audio area to find the peak (i.e., the point were the rejection is the worst) and adjust the high adjust pot to the maximize the null of this high end audio.

The tuning of the high and low frequency phasing adjustments interact with each other, and the best over all rejection will be a compromise of the best low frequency and the best high frequency rejection. An AC voltmeter connected to the audio jack can be used to measure the frequency response and will give the best indication of the audio rejection across the bandpass. Keep in mind that the audio limiter kicks in at ~0.3v pk-pk or 0.15v peak, or 0.1v RMS so you will not get an audio output larger than this.

Alternatively, the sound card on a PC can be used in conjunction with audio spectrum analyzer software to view the level of the audio tone as it is swept across the receiver passband. The goal is to get the best overall rejection across entire passband. It may be necessary to re-tweak the center frequency rejection using the balance and phasing adjustments get the best results. The ideal rejection response will look very similar to the image rejection figure above. The nulls will end up at roughly 250, 350, 550, and 750 Hz as shown in the figure.

After just a few adjustments, a minimum 40 db of rejection is very easy to get. A bit more work will be need to get 45 db of rejection. With some patience and persistence, it is possible to get over 55 db of suppression across the audio bandwidth, with deep nulls exceeding 70 db. Stop when you are satisfied with the results.

All three pots interact on the low, mid and high audio end. The balance pot may need further tweaking to get good suppression across the entire audio band. If the balance pot ever gives a null that is no longer very touchy, you might try setting the high and low pots back to mid range and start over again. Often optimizing the high end will hurt the low end rejection and visa-versa. Sometimes tuning past the optimum null point will help speed this opposite sideband rejection interactive process.

See the figure above for the simulated sideband rejection. This very excellent rejection is indeed possible (55 to 70+ db) and has been observed in all the prototypes, but will only be good for a small portion of the 20 or 30m band as the C/L/C RF phasing section will detune and reduce the overall rejection. Thus it is best to optimize the 20m version for the center of the tuning range (~14.030), while on 30m, it might be best to optimize around 10.115 MHz, as there is not as much activity in the higher 10.150 MHz end. In general, the opposite sideband rejection will be over 45 db across the 20 or 30m band.

When you are done, tune the receiver to the strong signal LSB side. Adjust the volume control to produce a comfortable listening level, then retune the receiver through zero beat to the rejected sideband. The signal will be barely perceptible, if it is heard at all.

Setting RX/TX offset

The transmit/receive offset is a matter of individual preference. Here we will set the transmit/receive offset to suit the preference of the operator. However, even after this has been set, the RIT control can be used to over ride whatever default offset has been set up in this step.

First locate the trim pot used for the transmit/receive offset, R53, as shown in the picture below. This pot is mounted on the front left hand corner of the board.

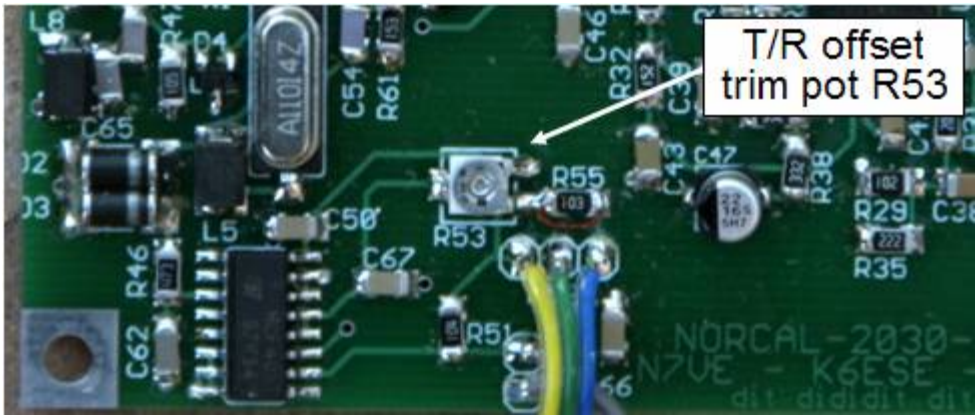

Figure 129. Location of the T/R offset trim pot, R53.

This adjustment is not difficult.

- First, set the RIT knob to the center setting. There is a center detent setting for this point.
- Second, with the spot switch turned off (up position), tune in a strong signal and tune it to a frequency that you want to copy cw at.
- Third, turn the spot switch on (down position). Adjust the trim pot R53 until the strong signal is zero beat with the receiver.

That is it. Adjusting R53 is setting where the transmitter sends at. You want it to transmit on exactly the same frequency as the other station. The spot switch helps you check that. Whenever you turn the spot switch on (switch down), you can zero beat the station and know that you will transmit on his frequency. Turning the spot switch off (up) will allow you to hear the station at the receive offset that was set up using trim pot R53. If you want to change this offset because of interference or a change in your listening preference, the RIT knob can be used to adjust the receiver without changing the transmitter.

Once again, if you are ever confused as to where you are transmitting, simply turn the spot switch on (down), and zero beat the station you want to transmit to. A spot switch is a very useful feature to have in a transceiver. If you ever find that you don't have the default transmit/receive offset (center position) where you really want it, simply redo the offset procedure above.
At this point, the transceiver is ready to use. If you measure the receiver current drain when connected to a 12v supply, it should draw between 11 to 12.5 mA. Because a switching supply is used, the current drain increases as the input voltage drops and decreases as the supply voltage increases. The upper limit of the supply voltage is 15v. Do not exceed this voltage. The lower limit is 7v. The receiver will work at a lower voltage than this, but the switching supply output to the keyer becomes unreliable during transmit. The transmitter will only sometimes work down to 6.2v. Even at this voltage, the output power will be over 1w.

Transmitter Test

At this point the transmitter can be tested to make sure it is meeting it rated power output. With a 12v supply, it should put out ~3w on 30m and 4w on 20m. Using 13.8v, this should be closer to 4w on 30m and 5w on 20m. If the power output is low, adjust the turns spacing on L18. The inductance can be varied by changing the % of the core the turns occupy. By compressing the turns into a small area on the core, the inductance increases, spreading the turns out more decreases the inductance. This can be used to fine tune the power output to get to the final expected power output.

Operating the NC2030

I am not sure what to say here. The NC2030 appears to operate much the same as a superhet receiver. The NC2030 has a built in keyer, complete with a memory function. The instruction on using the keyer and all of its functions are at the end of this document. If you never want to bother with the memory functions, or the beacon mode, or changing the keyer side tone frequency, just plug in a paddle and go. The only thing you really need to know is how to use the cw speed control on the front panel.

The keyer has a straight key mode where a straight key (or an external keyer) can be plugged into the transceiver. When the transceiver is turned on, the keyer chip looks to see if one side of the paddle is grounded (like what would happen with a mono straight key plug), and the keyer will enter straight key mode. If you want to use paddles again, simple power off the rig and turn it on again to clear out straight key mode.

The keyer also has a handy “tune” mode. Hold both the dot and dash paddles closed for five alternating dots and dashes and the transmitter will go into a steady transmit. Pressing either paddle will cancel the tune mode.

Read the keyer operating section. There are lots of neat things that this keyer can do.

The receiver has RIT and a spot switch. The spot switch is normally operated in the off, which is with the spot switch in the up position. The spot switch is a useful feature that is not simple to do in a superhet, so no superhet I know of has one. In order to make sure that you are zero beat with a station, simply turn the spot switch on (down), and zero beat the station you want to transmit to. Then turn the spot switch off (up). The RIT should have been set up to have your desired receive offset set up as the center position of the RIT. However, if you want to offset the receiver frequency for whatever reason, the RIT knob is available. The RIT covers a limited tuning range, roughly 2 KHz total.

The SCAF filter can be very useful. It normal position is turned completely counter clockwise where its cutoff frequency is above the main RC pass band. In this position, the receiver should be about 500 Hz wide (~350 Hz to 850 Hz), with no ringing. If the signal you are listening to has high side interference, the SCAF knob can be turned clockwise until the interfering station just disappears. Unless the interfering station is very strong, the interfering station will normally be gone. The price to pay for using the SCAF filter in this manner is that it does introduce some mild ringing. Since the SCAF introduces some ringing, it should be kept in the far counter clockwise position until it is needed.

The SCAF is also useful when listening to a very weak signal. Using the RIT to tune the weak signal to a lower tone (such as 400 or 500 Hz) will place the signal near the bottom of the receiver pass band. Then the SCAF can be adjusted until it just starts to attenuate the weak signal. Back the SCAF off just a bit, and you will have narrowed the receiver bandwidth significantly. Reducing the bandwidth reduces the total noise, thus enhancing the weak signal.

The frequency readout of the receiver is in cw. You have already used the frequency counter to set the PTO frequency. The default mode when the receiver is turned on is the "E" mode, which simply reports the frequency in the "xxRx" format, which is 10s KHz, 1s KHz, "R" (cw decimal point), 100s Hz. Given the limited tuning range of the receiver, this is good enough. The frequency counter is normally not running, but when it is activated, there are points in the band when you will be able to hear it. You probably do not need to know more about the frequency counter than that, but there are further operating instructions at the end of this manual.

There can be a few operating anomalies when using this transceiver. With only two screws holding the top and the bottom of the case together, the case is not very RF tight. Because of this, the DC receiver LO leaking from the case can be picked up by the antenna if the antenna is very close to the receiver. This can cause a feedback "howl" in the receiver. You could modify the case to make it more RF tight, but the easiest thing is to locate the antenna feed point at least five feet from the transceiver. This is more of an issue with an end feed antenna or a small portable vertical than an elevated antenna such as a dipole. It is probably not a good idea to place an auto tuner inside the transceiver and connecting a random wire antenna right to the back of the radio.

The other anomaly is detection of high power shortwave broadcast transmissions. It takes only very slight non-linear anomalies in the front end of a DC receiver to cause it to pick up AM broadcast signals that are off frequencies. I have only heard this twice when using my NC2030, but the effect does exist. When this happens, what you will hear is a voice or music broadcast that is the same no matter where in the band the receiver is tuned to. The NC2030 is much better is this regard than past DC receivers, but the problem can still exist.

Other than that, enjoy using the receiver. It can be fun to make up a switch to move the antenna from the NC2030 to a second test receiver to hear the difference between the two. Simply make sure the second receiver is set to LSB as that is how the NC2030 is configured. You should notice immediately the difference in the roll off as a signal goes out of the pass band. The NC2030 pass band is very sharp. You will find that the upper frequency and lower frequency roll off is much steeper than you are probably used to on other rigs using only crystal filters. The steep roll off makes signals, even very strong ones, seem to pop up then disappear as your tune across the band.

Secondly, search for very strong signals that cause the test receiver problems. For very close in signals the NC2030 reacts much better to strong signals just outside the receiver pass band than other very good receivers. In the case of a very strong signal very close in, the key clicks are often the artifact that is heard as it is extremely rare to have a signal that causes the receiver to overload. Using a 500 ft loop during field day this year, no such signal was ever encountered.

Another good test of this is a QRP group operating event. It is normally very difficult to place two QRP transmitters on the air at the same time in the same band. Two such stations should be widely separated, at the very least several hundred feet, to keep from damaging each others front end. However, under such conditions, most receivers will overload and distort when the other transmitter is keyed. The NC2030 has a very stout receiver and handles this situation much better than other radios. The only drawback is that the two operators will be able to hear the VFO of the NC2030 as this is a DC receiver. The LO leakage out the front end has been measured to be -50 dbm (0.00000001 watts). This is not all bad it will not work to have the two transceivers only 500 Hz apart anyway.

Thirdly, listen to the received signal itself. Chirps and key clicks can be heard much more clearly on the NC2030 than on the typical superhet. Crisp, clean audio is a hallmark of a DC receiver.

Lastly, listen to the band when it is really noisy. The lack of ringing of the NC2030 will make this awful condition much easier to listen to than on a typical superhet and its ringing crystal filters.

Principles of operation

Transceiver Block Diagram

Receiver

T/R switch

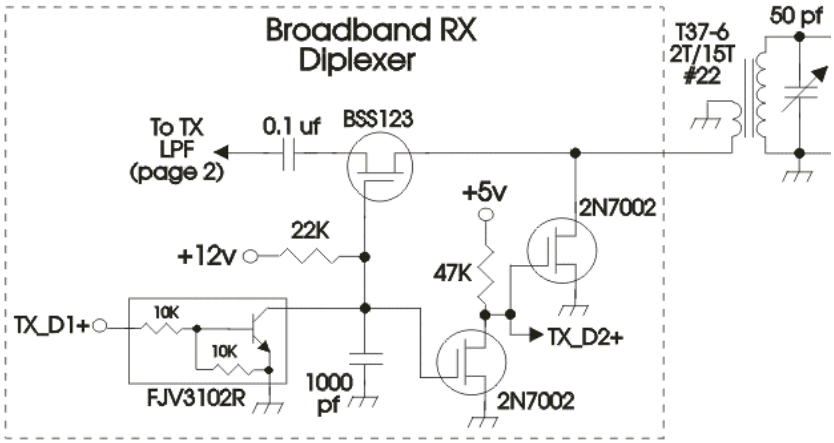

This circuit isolates the receiver from the transmit signal during when transmitting, and lets received signals pass when receiving. Many transmit-receive T/R switches use clamping diodes to limit the transmitted RF into the receiver front end. However, these diodes significantly degrade the receiver third order intercept. Thus diodes have been replaced with MOSFETs. One MOSFET (BS123) is placed in series with the in coming received signal, and a second (2N7002) is placed across the signal to ground.

When receiving, the series MOSFET is turned on, while the shunt MOSFET is turned off. This lets the received signal pass through un-attenuated. When transmitting, the series MOSFET is turned off, blocking the transmitter signal from the receiver input, and the shunt MOSFET is turned on, further clamping the transmitter input to the receiver.

A third MOSFET is used as an inverter to makes sure the series and shunt MOSFETs are turned on and off oppositely from each other.

Detector/ AF pre-amp

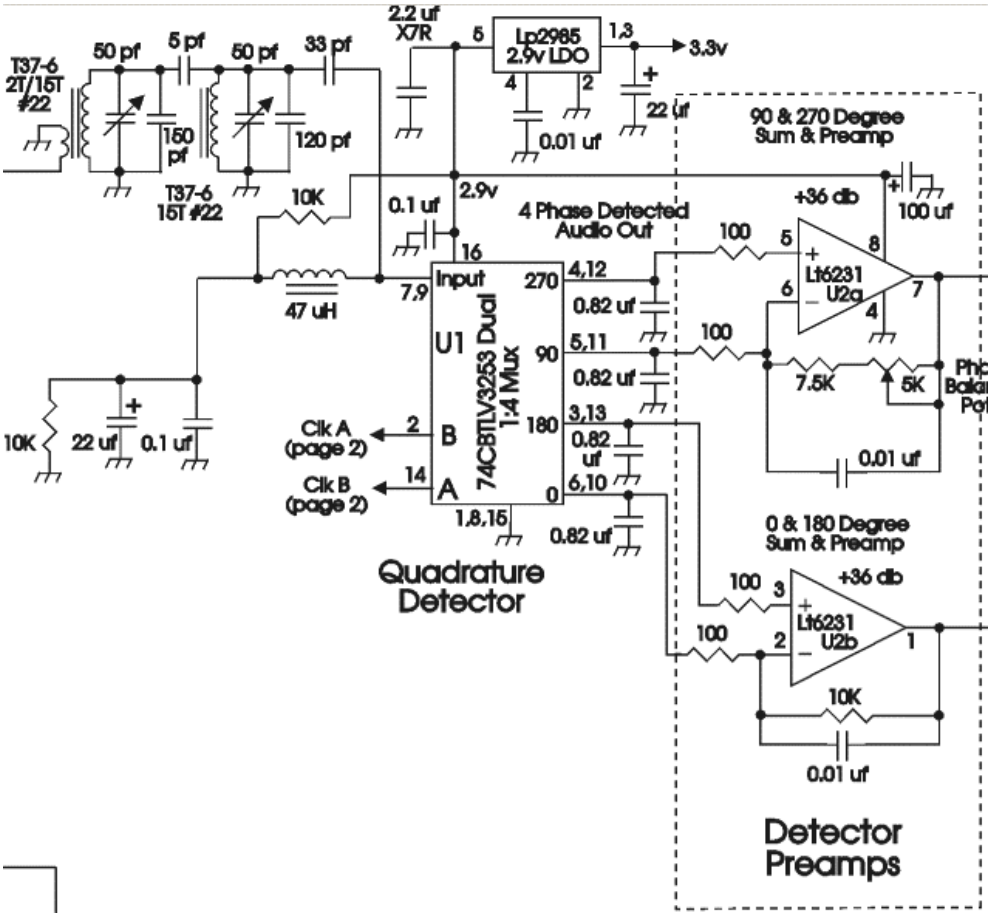

Figure 130. Tayloe quadrature detector and I/Q audio preamplifier schematic

The detector follows the T/R switch above. The input is a doubled tuned bandpass filter used to improve the out of band signal rejection.

The detector makes use of a very high speed four to one analog multiplexer. The input to the detector is biased at one half supply voltage (1.5v) in order to place the incoming RF signal in the center of its input 3v range. The output of the detector is the across the four 0.82 uf detection caps. Assuming a 50 ohm input impedance, the output impedance of each of these four outputs is 200 ohms. The four outputs are phase shifted with respect to each other because each of the outputs was taken from four separate quarter cycle samples of the input signal. Thus the outputs are phase shifted at 0, 90, 180, and 270 degrees.

These four different phased are combined by the post detector, audio pre-amplifier section into two signals called I (in phase) and Q (quadrature). The 0 and 180 degree outputs are differentially summed using one op-amp, while 90 and 270 are summed using the second op-amp. The differential amplification helps reduce noise that might be common to all four outputs.

Some folks have described the detector as a sample and hold device. While this is true in that the detected signal on the detector capacitor is held from one ¼ cycle sample to the next, the actual

detection is not simply a sample. I think of the detector as being an integrating detector. Each input capacitor sees the incoming signal for only ¼ of an RF cycle. During this ¼ cycle, the voltage on the detection capacitor is charged via the R of the system impedance as seen at the input to the multiplexing IC. If the detector input were to be fed directly from a 50 ohm signal generator, the capacitor would be charged by the input signal through the 50 ohm system. Mathematically, this process looks like an integral. If you were to take the integral of a ¼ cycle of sine wave centered about its peak, you will find that the peak detection voltage will be ~90% of the open circuit voltage of the generator output.

The integrating effect makes this detector unique in that, unlike other mixers, this detector produces a difference only and not the typical sum and difference products a mixer normally produces. In a DC receiver, the difference produces the desired audio signal, while the sum products would normally just be thrown away.

A typical diode mixer, normally provides a 50 ohm termination and a 6 db signal loss. This means that with a 1v pk-pk RF generator open circuit voltage, the 50 ohm diode mixer termination attached to the 50 ohm generator cuts the signal down to 0.5v pk-pk, while the 6 db conversion loss on top of this yields an output of 0.25v pk-pk.

This new "Tayloe detector" on the other hand will look like an open circuit close to the detection frequency, and will produce an output voltage of 0.9v pk-pk, a value quite close to the open circuit generator voltage. Moving a ways away from the detection frequency, the detector starts to look like a short circuit, thus rejecting unwanted off frequency signals.

Thus the new detector does have some conversion loss, contrary to the claim of some folks. I think their confusion arises from looking at the voltage at the input to the detector, which is a point on the far side of the system impedance across which the voltage drop actually occurs. The 90% detection voltage can be observed experimentally by measuring the open circuit voltage of an RF generator, then connecting the generator to the detector input and measuring the detector capacitor audio outputs. An alternative analytical approach is to model the detector in Spice and looking at the voltage at various points in the circuit.

The audio preamplifiers use 100 ohm input resistors. These resistors are not used as detector impedance terminations, but rather to isolate the detector capacitors from the op-amp "virtual input" + and – terminals. The effect of the 100 ohm resistors is to allow better detector bandpass characteristics, thus helping the off-frequency reduction of large signals. The use of the 100 ohm resistors into the preamp op-amps are a tradeoff between sensitivity and large signal performance since the introduction of any resistors in the low level signal path produces noise which reduces sensitivity. If large signal performance were not a consideration, these resistors could be eliminated and sensitivity would subsequently be somewhat improved.

The gain of the audio preamplifier is 67 or 36.5 db. The gain of the op-amp is the feed back resistance (10K) divided by the input resistance (100 ohm resistor + 200 ohm detector output). This gives a voltage gain of 33.3. However, the differential input of the detected signal gives another 2x gain to bring the total signal gain to 66.6.

The performance of this audio preamplifier section is key to the sensitivity, blocking, and IP3 performance of the receiver. Many performance trades can be done in this audio preamplifier section. Piggybacking an additional 0.01 uf cap across the existing 0.01uf caps in the feedback section of the I and Q op-amps will improve the blocking by 6 db while giving up 2 db in sensitivity. Likewise, the feedback gain can be reduced from the 10K currently used to 4.7K to also improve blocking by 6 db and also improve IP3, again at the cost of reduced sensitivity. Reducing the feedback resistors in half would require the feedback caps to double in size so that the breakpoint frequency stays the same.

One gain of the “I” audio preamplifier has a fixed gain, while the gain of the other (the “Q” audio preamplifier) has a gain that is variable. The variable gain allows an additional adjustment that is used in the opposite sideband suppression adjustment procedure.

Phasing strip

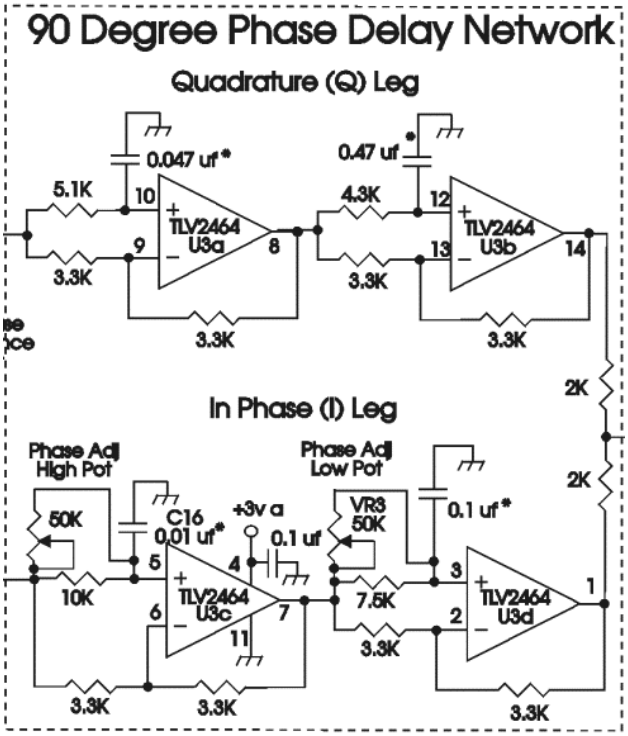

Figure 131. Audio phasing section schematic

The phasing strip gives opposite side band rejection. The I and Q outputs of the audio preamplifier are passed into the phasing strip. The phasing strip causes one leg to be shifted an additional 90 degrees compared to the other leg. Thus instead of I and Q being 90 degrees apart from each other, on the USB, the two halves of the phasing strips end up being 180 degrees apart from each other and when summed across the two 2K output resistors, cancel each other out. Conversely, on the LSB, the two outputs are now in phase and simply add to each other.

The phasing strip has two adjustment pots to properly align the opposite sideband suppression. One pot adjusts the rejection at the low frequency end (300 Hz), while the other adjusts the rejection at the high frequency end (700 Hz).

After the phasing strip has been aligned, the opposite side band will be rejected a minimum of 45 db, with much of the bandpass having 50 to 55 db of opposite sideband rejection.

The phasing strip has no audio gain.

R/C Audio Filter – Low pass

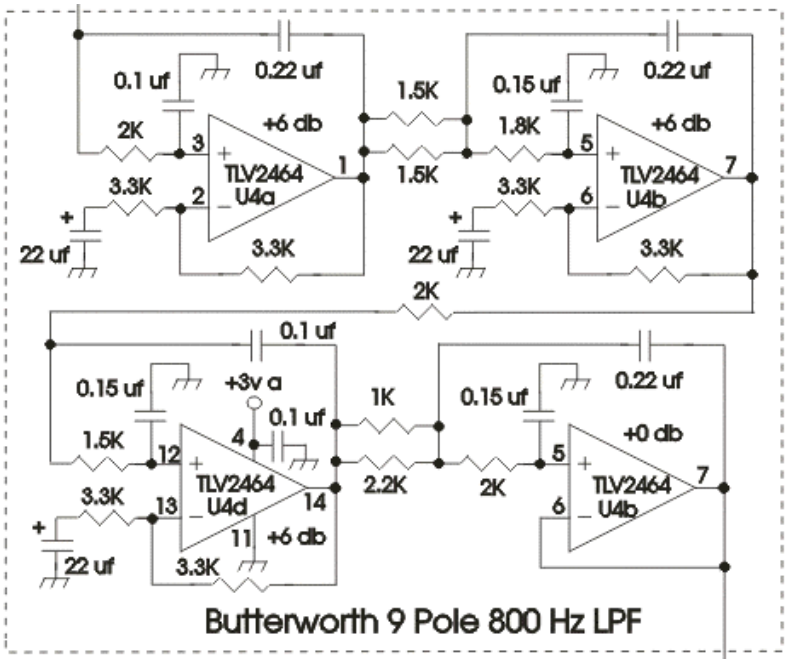

Figure 132. Main brick wall filter. 800 Hz active R/C low pass filter.

Other DC phasing receivers have used L/C audio filters as the main receiver bandpass. While these inductors are shielded, they will pick up stray magnetic fields such as AC hum from any nearby power transformer. R/C filters do not have this problem, and have the additional advantage of providing gain.

The first three sections of the filter have been set for a voltage gain of 2x (6 db) of gain, for a total of 8x (18 db) for the stage. The first stage of the audio filter relies on the net output resistance 1K (two 2K resistors in parallel) of the phasing strip.

A Butterworth low pass filter shape was selected in order to minimize ringing. A tradeoff was made between the number of stages required to get the desired high end signal roll off rate and the resulting audio ringing. Typical past receiver designs have emphasized sharp roll off with as few filter sections as possible. This requires high Q audio sections which tend to cause ringing. This ringing produces an audio tone that sounds “hollow”. An alternative (employed by the NC2030) is to use more sections, with each having a lower Q in order to get the same signal roll off rate. The longer 9 pole, low Q design has much less ringing than the shorter five pole, high Q design. The nine pole Butterworth in the NC2030 has all sections with a Q of three or less, while the alternative Chebychev five pole design would need at least one section with a Q of nine.

The difference can be clearly heard, especially when listening to the band when it is noisy and in poor condition. Intense band noise tends to be amplified by a ringing filter yielding a very harsh audio signal that is hard to listen to for an extended period of time such as a contest or a fox hunt. The lack of ringing makes the receiver much less fatiguing to listen to.

The 1.5v bias voltage of the filter section is provided by the output voltage of the phasing strip which in turn gets it bias voltage from the output of the AF preamp. The AF preamp gets it bias voltage in turn from the detector itself.

In case someone is wondering what happened to the ninth pole in the NC2030 filter, the frequency roll off of the detector is used as the ninth poll.

R/C Audio Filter – High pass

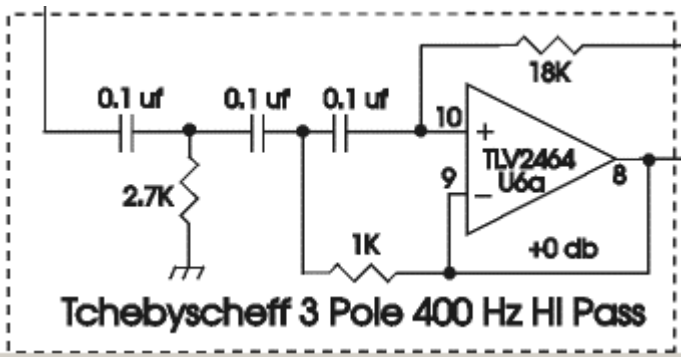

Figure 133. 400 Hz High pass filter schematic

The low frequency roll off of the receiver is far less critical than the high frequency roll off. Thus, only three poles of selectivity were used in this filter. This filter has no audio gain. The 18K resistor, which is part of the filter, is also used to provide a 1.5v bias voltage to the stage.

Audio Amplifier, Mute Switch & Audio Limiter

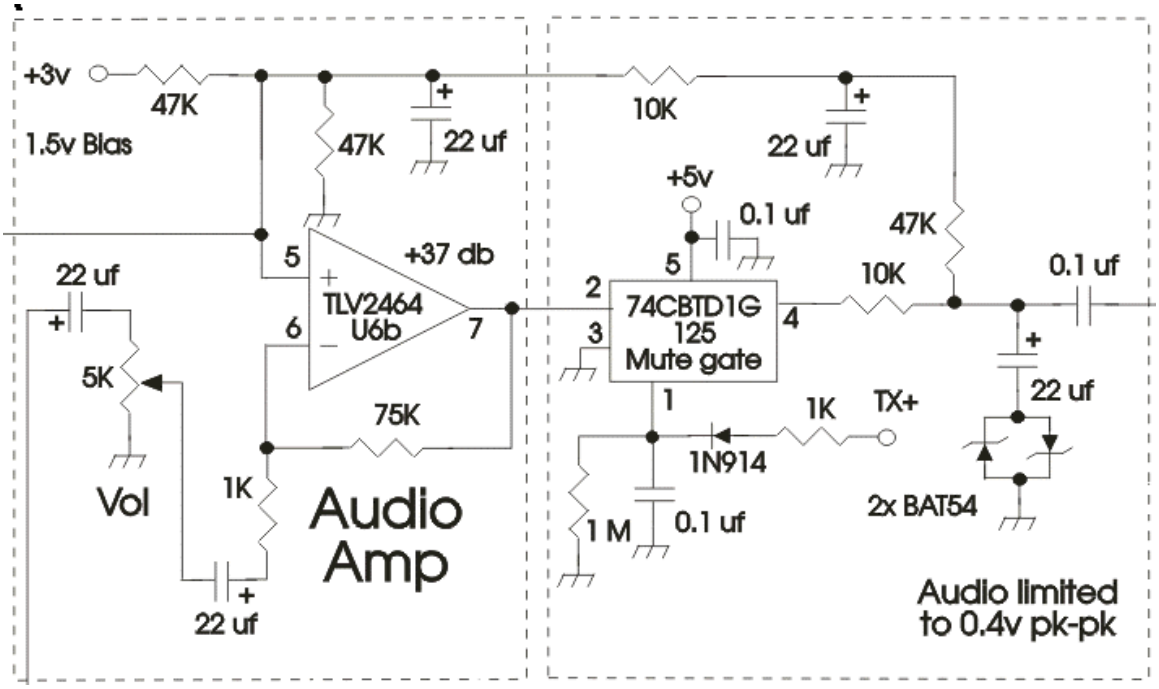

The amplifier stage has a gain of 75x (37 db) as set by the 75K feedback resistor and the 1K input resistor. The 1.5v bias at the + input to the amplifier is also used to bias the 400 Hz HPF above. This stage includes the volume control to set the listening level of the receiver.

Some receivers use an RF gain pot at the front end of the receiver to control the received audio level. However, this approach leaves the audio chain at maximum gain all the time, creating audio hiss that cannot be avoided, even with the RF gain pot turned all the way down. The location of this volume control, roughly in middle of the gain chain with only 37 db of gain following it, allows the design to minimize the background audio chain hiss when the volume is turned down. This insures that for all but exceptionally quite band conditions, the user will be listening to signals on the band and not unnecessary receiver noise.

The output of the audio amplifier feeds the mute switch, which is a single gate CMOS analog switch. The output of the gate is biased to 1.5v, the same as the input side, to minimize thump on the transition to receive (mute gate off to mute gate on) transition. The 0.1 uf cap connecting the mute output to the next stage also helps further attenuate any remanding low frequency thump. The mute gate has an R/C delay built in to delay the release of the mute for a few msec after the transmitter to minimize thumps from earlier in the receiver audio chain.

This receiver is designed to drive headphones. For normal headphones, 20 to 40 mV pk-pk is a very comfortable listening level. This circuit has a diode clipper to limit the audio to a maximum of 400 mV pk-pk. With the volume at maximum, the diode clipper starts conducting at 280 mV pk-pk at an input RF signal of –95 dbm. The SCAF filter that follows this stage tends to smooth out high frequency

harmonic distortion that the clipped waveform produces, making even an amplitude clipped waveform sound more natural.

The main function of the diode clipper is to limit the maximum signal to the ears when using headphones. 400 mV pk-pk is a loud signal, but is much better than listening to a solid 3v pk-pk signal (17 db louder – very hard on the ears) that might be heard if the limiter were not in place. When distortion due to diode clipping occurs, simply reduce the volume control until the distortion disappears and the volume is reduced back down to a comfortable listening level.

SCAF Variable Low Pass Filter & Headphone Drivers

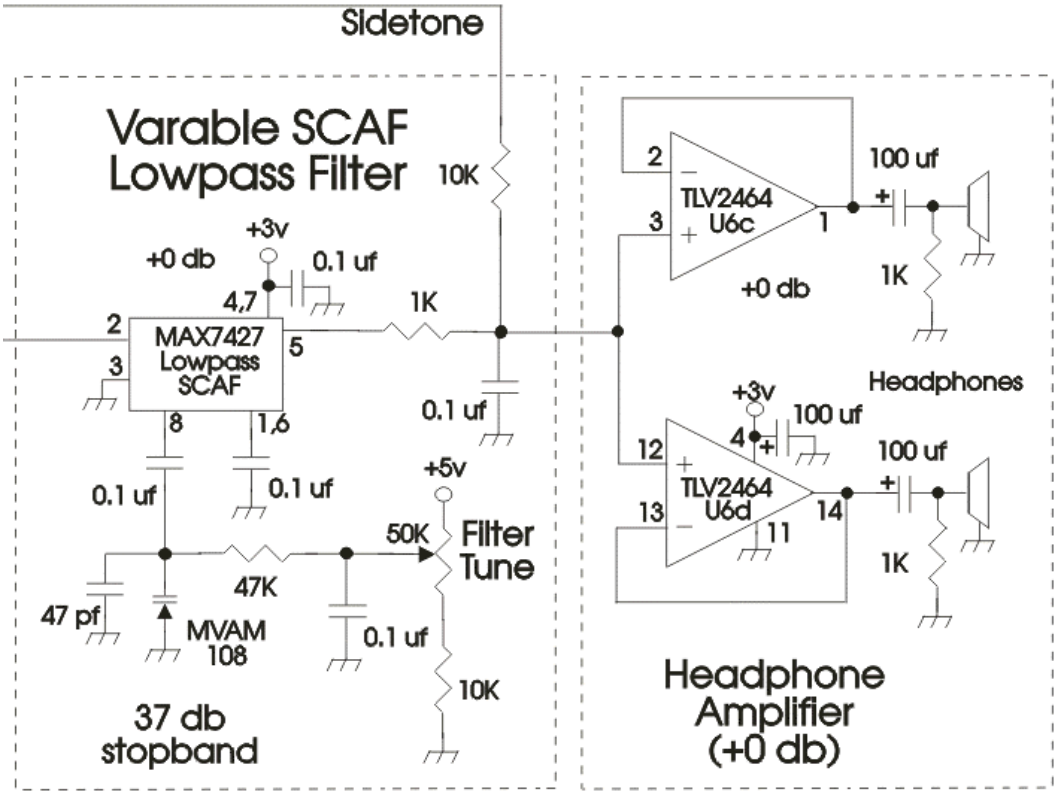

Figure 134. SCAF Low Pass Filter and Headphone Amplifier

This SCAF filter is a fifth order Elliptic low pass filter. This filter has an even steeper frequency roll off response than the main filter 9th order Butterworth, but has a more limited stop band response. However, SCAF filters tend to be fairly noisy and thus cannot be placed early in the gain chain. This filter works best at the very end of the gain chain, where it introduces virtually no noise.

The cutoff frequency of the SCAF filter is adjustable from approximately 900 Hz down to 300Hz by changing the voltage across the varactor diode, changing the low pass filter frequency of the filter. The cutoff frequency of the filter is normally set to a frequency higher than that of the main 800 Hz 9 pole Butterworth low pass filter. Here it serves to enhance the stop band of the receiver, without introducing ringing. In addition, for very weak signals, the SCAF filter can be lowered in frequency and thus narrow up the receive bandwidth.

PTO Circuit

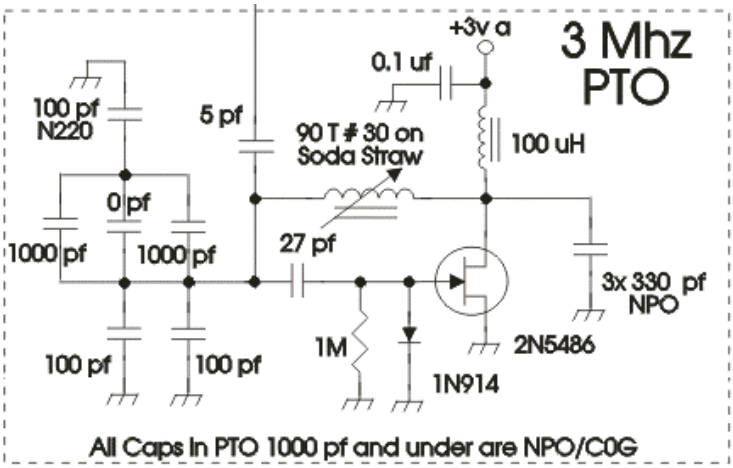

Figure 135. PTO schematic

The quadrature detector uses a 1x clock. For the 20m receiver, a 14 MHz LO is needed. For 20m, a 11.059 MHz VXO is mixed with the 3 MHz PTO shown above. Even though the supply voltage is only 3v, the voltage at the 5 pf output side of the PTO variable inductor is 12 to 13v pk-pk.

A 6-32 brass screw is used to tune the inductor. The tuning rate of the PTO is 10 to 12 KHz per turn. As the brass screw is inserted into the inductor, the frequency increases.

VXO Circuit (20m - 11.059 MHz, 30m – 13.0 MHz)

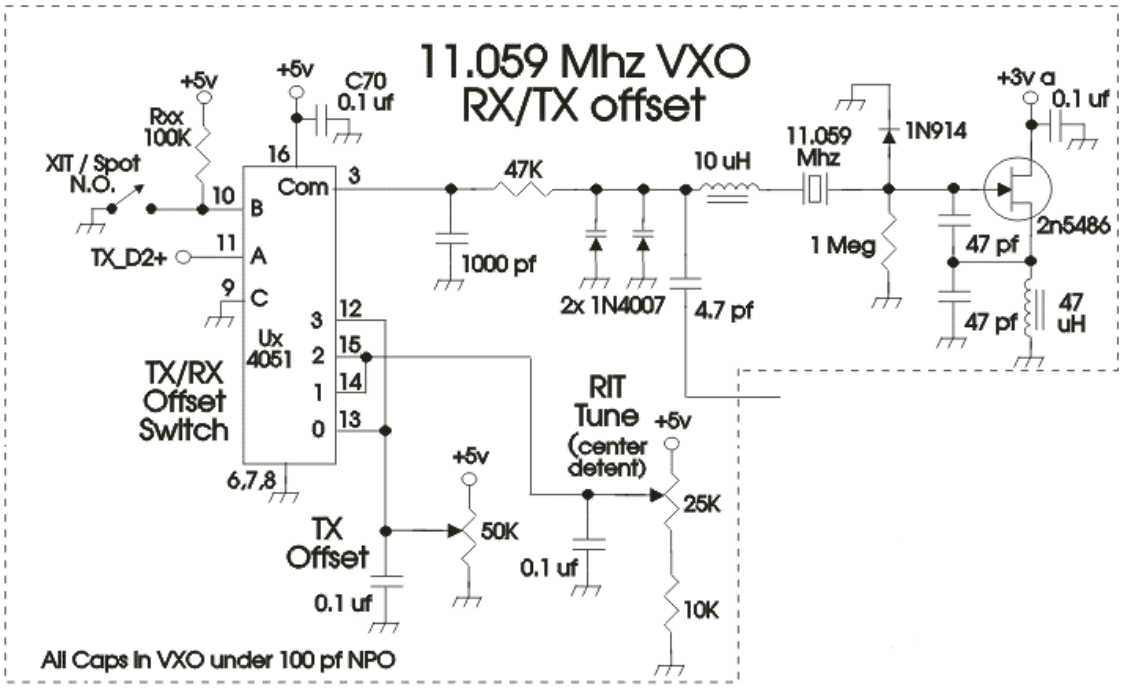

Figure 136. VXO schematic and transmit/receive offset switching

The 20m version of the NC2030 mixes the 3 MHz PTO with the 11.059 MHz VXO output. 11.059 + 3.0 = 14.059 MHz. The VXO provides a small tuning range which is used to provide transmit-receive offset. Half of an 8:1 analog multiplexer is used to select the offset voltage that gets routed to the VXO varactor diodes, which are a pair of inexpensive 1N4007s diodes.

The analog multiplier, a 4051, selects between two different voltage sources, one an on board trimmer pot that is used to set the 600 Hz transmit offset, and the other, a front panel pot, used to set the RIT receive frequency. These two voltage sources are selected based upon the state of both the transmit state (signal TX_D2+) and the spot switch.

The use of the spot switch sets the receiver to the transmit frequency, which is nominally 600 Hz lower than the frequency the receiver uses. This allows the user to tune the transmitter to the exact same frequency as another station simply by turning on the spot switch and tuning the other station to zero beat. When the spot switch is turned off, the user will be right on the transmit frequency. At that point, the RIT can be used to adjust the pitch of the received signal.

It should be noted that for the 30m version, a 13.0 MHz crystal is used, and the PTO is lowered to 2.9 MHz. 13.0 – 2.9 = 10.1 MHz.

LO Mixer and IF Filter

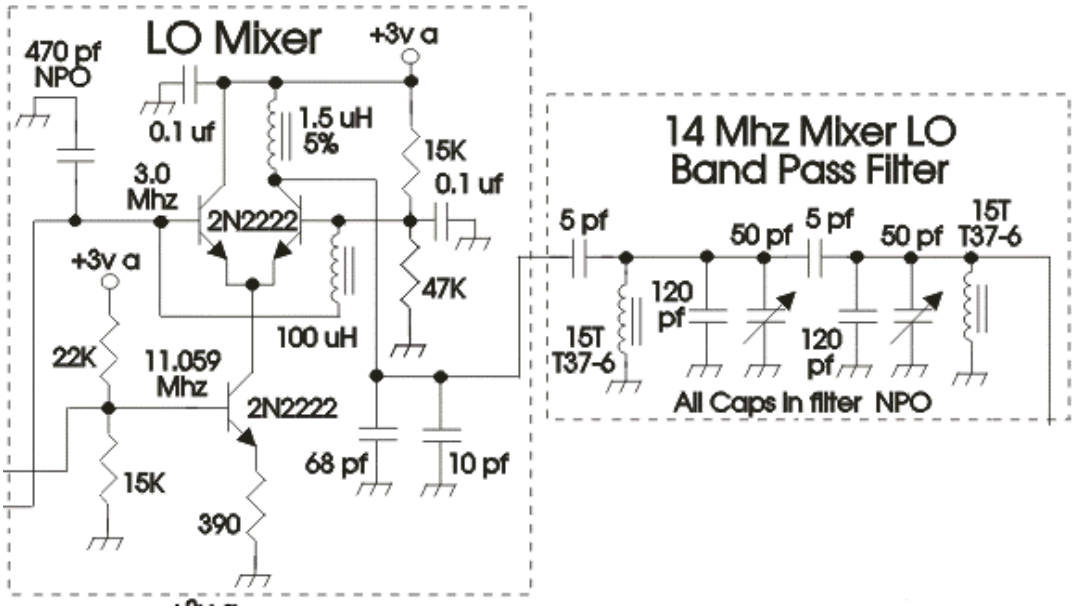

Figure 137. LO Mixer and IF Filter schematic

The mixer shown here is a low voltage, low power version of the old CA3028 single ended mixer. The circuit shown here is for the 20m version. The 3 MHz input drive level is approximately 0.25v pk-pk, while the input from the 11 MHz VXO is several volts pk-pk.

The output of the mixer into the filter section is approximately 1.5v pk-pk.

LO IF amp and Phase Splitter

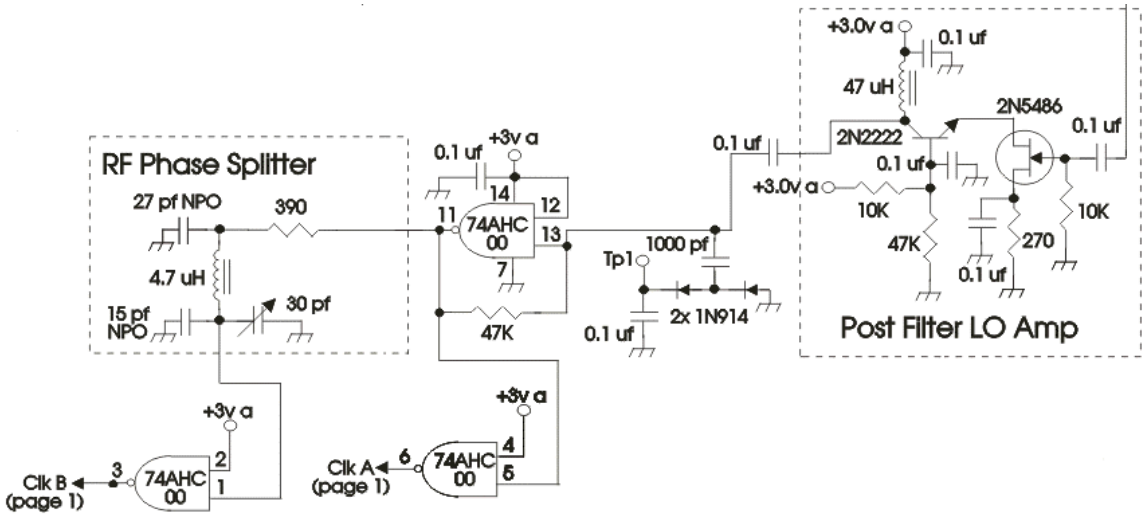

Figure 138. Schematic of LO amplifier and detector clock phase splitter

The post filter LO amplifier is a configured as a cascode amplifier with a high impedance FET input. The 10K gate resistor is simply provided to provide a termination for the filter. The output is 1 to 2v pk-pk. A diode detector is provided to help the user in the filter tune up process.

The receiver does not use a 4x clock, as several versions in the past have done. The detector uses two phase shifted 1x clock inputs for switching the detector outputs. One clock line is a direct output of the LO amplifier, the second clock signal is a phase shifted copy of the first. This second signal is phase shifted by 90 degrees using a pi type C/L/C filter section. This phase shift section was used to minimize the receiver current drain, as the preferred implementation, the use of a 4x clock and a 4x divider requires a significant amount of power. The trade here was decreased power, but at the cost of a less consistent opposite sideband rejection across either the 20 or 30m band.

Transmitter

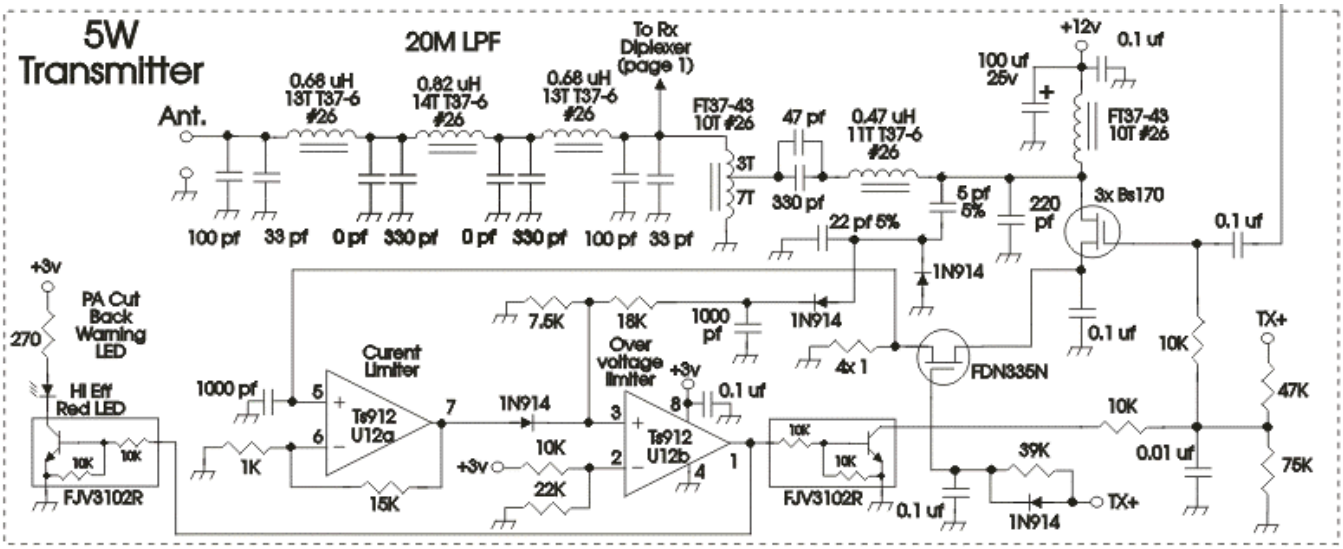

Figure 139. Schematic of Class E Transmitter

Class E PA finals

The gates of the PAs three BS170 MOSFETs are driven with a 5v square wave produced by a single 74ACT00 gate. The final is capable of 5w output. The power output is not adjustable and is dependant upon the supply voltage. 14v should produce just over 5w, while 7v will produce roughly1.5w. The 30m version produces less output power than the 20m version due to reflections between the BS170 gates and the driver producing an imperfect drive waveform that is worse at 30m than at 20m.

The first C/L/C elements between the BS170 MOSFETs and the 10T broadband transformer are the elements that define class E operation. The values listed above are for 20m. Because of the new FCC regulations on harmonic suppression, a seven element low pass filter is used to make sure the transmitter has proper harmonic suppression.

CW Waveform shaping

The power switch for the PA is the FD335 MOSFET. The R/C arrangement connected to the gate of this switch controls the trailing edge shape of the CW pulse. The rising edge of the CW wave form is set by the R/C time constant of the 0.1 uf cap connected to the gate of the three BS170s in combination with the 47K in parallel with the 75K in series with the 10K resistor in the gate 3v bias circuit. Currently, the rise and fall time is about 5 msec.

High Voltage/High Current PA protection

The voltage on the drain of the BS170 PA MOSFETs is divided to a lower voltage by a capacitive divider, and rectified to a DC voltage. This is compared against a 2v reference. When the voltage on the drain gets in the 50v range, the comparator will trigger a transistor discharges the 3v PA MOSFET gate bias through a 10K resistor. Cutting back the gate bias will reduce the output power and thus reduce the PA drain voltage to a save level.

In the source circuit of the BS170 PA FETs are four 1 ohm resistors. These are used to produce a composite 0.25 ohm current sense resistor which is used to monitor the current drain of the PA. This voltage is amplified by a 15x DC amplifier which is connected to the over voltage comparator via a diode. In effect, the over voltage comparator will discharge the PA MOSFET 3v gate bias if either an over voltage or an over current condition exists. In either case, the output power is reduced and both the PA output voltage and current input are backed off, thus protecting the PA from both short circuit as well as open circuit conditions.

AFA Frequency Counter Instructions

Introduction

The NC2030 uses an AFA to read out the frequency in morse code and is a modified version of the ScQRPion “Stinger Singer” (a.k.a “SSS”) frequency counter. On power up, the AFA delays (to wait for the keyer chip to send “FB”), then sends “2T3T” to indicate this is a NC2030 AFA.

The counter modes are discussed below. For use in the NC2030, the power up default of the “E” mode is the one primarily used to get a quick reading of where in the band the radio is tuned to.

The “L” mode is used when doing frequency shifts of the receiver LO when the PTO is being shifted to get it in the right frequency range.

Counter Modes

The counter has five frequency measurement modes and two morse code announcement speeds. The modes are summarized below in Table 1-1:

Mode	Digits Announced
“E”	One measurement taken: 10s KHz, 1s KHz, “R”, 100s Hz
“L”	One measurement taken: 100s MHz, 10s MHz; 1s MHz, “R”, 100s KHz, 10s KHz, 1s KHz, “R”, 100s Hz, 10s Hz, 1s Hz
“F”	One measurement taken: 1s KHz, “R”, 100s Hz, 10s Hz, 1s Hz
“ER”	Like “E” above, but repeats measurements forever.
“LR”	Like “L” above, but repeats measurements forever.
“FR”	Like “F” above, but repeats measurements forever.

Table 1-1 Counter Announcement Frequency Measurement Modes

Pressing and holding the program switch will cycle through all six counter modes at high announcement speed, then through all six at a low announcement speed. Continue to press the program button and the counter will cycle forever through all six announcement modes, switching announcement speed every time it gets through all six announcements.

When the program button is release during a given mode, the measured frequency will be announced after a 1 second count delay. The counter now remembers that mode as the default as long as the power is left on to the counter.

Notice that “R” (a cw short hand for “.”) is used as a separator to break up the MHz, KHz, and Hz digit groups.

Any frequency announcement can be interrupted by pressing the program button until a “K” is heard. This is particularly useful for stopping a repeating mode (ER, LR, and FR) or a long “L” type frequency announcement.

Counter Usage

The different modes were designed for different reasons. The “E” mode especially short and was intended to be used to read out the frequency of a direct conversion receiver (such as the NC2030). As such, only 100 Hz resolution was desired, and knowledge of the frequency to 99.9 KHz is good enough.

The “L” mode (think “long”) was designed for general bench counter use and gives the complete frequency down to 1 Hz. Leading zeros in the 100s and 10s of MHz digits are skipped.

The “F” mode (think “filter”) was intended to aid in crystal matching for crystal filters in homebrew receivers. When crystal matching, the most significant digits don’t change. To save time, only the least significant 4 digits (1s KHz through 1s Hz) are announced.

The repeat modes “ER”, “LR”, and “FR” were primarily intended to allow the monitoring of frequency drift of a VFO over time. I once used this mode for two weeks non-stop as I tweaked the temperature compensation of a VFO I was building. This is my family’s favorite mode. ☺

The counter has a high speed and low speed announcement mode. The high speed is the default mode. After a short time of using this device, copying speed of numbers improves dramatically. It makes a great cw "numbers" trainer!

Keyer Instructions

Operation:

General notes on using the dit, dah and mem switch to control the keyer: The switch on pin 4 of the keyer chip will be referred to as the mem switch. Multiple functions result from multiple switch-press combinations (mem alone, mem+dit, mem+dah, mem+both dit and dah). Also, the switches can be pressed and released (PAR) OR pressed and held for two seconds (PAH). This doubles the number of combinations of the three control switches.

Generally, PAR is used for actions: send the code speed or send a memory. PAH is used for settings: change the code speed (no pot) or record a memory or change the iambic mode.

4 menus are used for setting various options - they are activated by a PAH of the mem switch alone or plus a simulpress of dit or dah or both. The menu selections are made by pressing either the dit or dah switches - you will then normally hear a corresponding dit or dah via the sidetone, the selection will be made and you are then returned back to normal keyer mode. In general, the operator can skip a menu item by a PAR of the mem switch.

Note that the keyer sidetone will be lower in pitch (about 270 Hz) for keyer commands such as the menu prompts. The normal sidetone pitch for routine sending defaults higher at about 580 Hz and can be changed with the SS menu command.

keys used	PAR (press and release)	PAH (press and hold)
mem switch	send memory 3	record memory 3, O?, also beacon items: BE and BA
mem + dit	send speed	paddle set of speed, pot options, main menu
mem + dah	send memory 2	record memory 2: M?
mem + both	send memory 1	record memory 1: T?

Figure 140. A Function Table of the Keypress Combinations

Powerup:

After powerup the keyer will send an FB through the sidetone to signal correct operation. If either the dit or dah input is pressed during powerup the opposite paddle input will act as a straight key. An easy way to do this is to plug in a mono plug from the external key or keyer cable into the stereo paddle jack of the NC2030. The ring contact of the paddle jack will then be grounded.

Speed Readout:

The speed (in WPM) will be played through the sidetone if the mem switch is simulpressed with the dit switch and then both are released. I normally press the mem switch first and hold it, press the dit switch and finally release both.

Speed Control and Menu:

Initially the keyer will powerup at a default speed of 16 WPM in paddle speed set mode. The speed can be adjusted by pressing and holding the mem switch along with the dit switch. Usually I press and hold {PAH} the mem switch and then tap the dit switch. After 2 seconds, the keyer will send an S (for speed set). Press the mem switch to advance to the next menu item without changing the speed. Or, pressing the dit switch will increase the speed by 1 WPM and send a dit. Pressing the dah switch will decrease the speed by 1 WPM and send a dah. You can continuously adjust the speed by holding either switch but note that if you run the keyer "off the scale" at either 8 or 49 WPM, the keyer will "wrap around" to the opposite speed extreme. Exit the speed adjust routine by pressing and releasing the mem switch.

If the pot circuitry is connected AND the P menu is invoked to turn on the pot speed control the speed can be adjusted by turning the pot. Maximum possible speed is 49 WPM, minimum possible speed is 8 WPM. Note that the minimum speed can be affected by component tolerances on the speed pot and the capacitor - see the pot calibration menu item if an 8 WPM minimum speed is required. The pot position is read continuously when the keyer is sending code, just before each dit, dah or space is sent. This allows the operator to adjust the code speed even in the middle of a memory send or record.

	Menu item	pressing a dit:	pressing a dah:
S	Speed set from paddle	increases speed by 1 WPM	decreases speed by 1 WPM
P	Pot / paddle speed control	selects pot speed control	selects paddle speed control
C	Calibrate pot speed control	enters the calibration routine	restores default pot calibration
B	Bug / straight key mode	enables bug mode (dah = key)	disables bug mode (default)
A	iambic mode A or B	enables iambic mode A	enables mode B (default
R	Reverse paddle mode	reverse dit and dah switches	return dit and dah to normal
AU	Autospace on / off	turns on character autospace	turns off autospace (default)

Figure 141. Mem + dit menu (PAR mem to advance to the next menu item)

P - Select Pot or Paddle speed control:

Allows the keyer to be switched between pot or paddle speed control. The keyer defaults to paddle speed control.

C - Calibrating the Pot speed control:

Due to the variation in capacitors and pots it is likely that the minimum setting of the pot will result in a minimum speed higher than 8 WPM. This menu item will compensate and store an updated calibration value. Before entering the menu, be sure to turn the pot to the minimum speed. Then press the dit to go into the calibration routine - then one or more dits will be sent after a short delay and the keyer will exit from the menu. If the pot calibration is run with the pot not set at the minimum, rerun the cal with the pot correctly set. Pressing a Dah will restore the default powerup calibration value.

B - Bug / Straight-key mode:

Dits are sent normally but dahs are sent like a straight key.

A - Iambic mode A or B:

The A mentioned above signifies the mode A/B select menu item. The iambic mode of the keyer can be set to either mode using this routine. Check the JHP web site for an Acrobat (.pdf) file which explains the difference between the A and B keying modes.

R - Reverse paddle mode:

Reverses the dit and dah switches (easier than resoldering a jack). Remember that the pot speed control will be changed to the dit paddle which means that pot speed control changes while the dit is pressed will be ignored until the dit is released.

AU - AUtospace on/off:

The autospace feature inserts a character space (1 dah in length) automatically if the operator has not pressed a paddle switch 1 dit space after the last dit/dah sent. This feature is always on in the memory record routines (needed for the recording process).

Recording Memory 2:

A memory of up to 40 characters long can be recorded. The memory 2 record menu is entered by simulpressing the memory and the dah keys and holding them for 2 seconds. I usually PAH the mem switch and then tap the dah key.

	Menu item	Pressing a dit:	Pressing a Dah
SS?	Sidetone Set	Lowers sidetone	Raises sidetone
M?	Record memory	records a dit	records a dah

Figure 142. Mem + dah menu (PAR mem to exit)

SS? - Sidetone Set:

Press either a dit or dah to enter the SS menu and turn on the sidetone. A dit PAR (or PAH) will decrease the sidetone frequency, a dah PAR (or PAH) will increase the sidetone frequency. The sidetone will "wraparound" at the high (about 1700 Hz) and low (about 320 Hz) frequency limits. When the sidetone is at the desired frequency a PAR of the mem switch will exit the menu and store the new sidetone frequency in EEPROM. The SS menu item affects only the normal sidetone, the command sidetone is unchanged.

M? - Record Memory 2:

The memory is recorded by sending normally. Note that the keyer output is off during the recording and that the lower command sidetone is used. When complete, PAR the mem switch. The routine will be exited automatically after the 40th character is sent. The memory is saved in flash memory which means that it will still be there even if power is removed. If this menu item is entered by mistake, PAR the mem switch to exit without changing the memory.

Playing Memory 2:

Play memory 2 by simulpressing and releasing the memory and the dah keys. I usually PAH the mem switch and then tap the dah switch - the memory starts to play after the mem switch is released. A tap of either the dit or dah switch will stop the message play.

	Menu item	pressing a dit:	pressing a dah:
BE	BEacon mode	starts the beacon going	Exits the menu
O?	Record memory 3	records a dit	records a dah
BA	Beacon Alternate mode	selects alternate beacon sends of mem 1 and mem 2	selects send of mem 1 only (default)
ST	SideTone on/off	turns off the sidetone	turns the sidetone on (default)

Figure 143. Mem switch menu (PAR mem to advance to the next menu item)

BE - Beacon Mode:

Beacon mode will send the contents of mem 1 continuously. Start the beacon by pressing the dit switch - the beacon starts to play. Exit beacon mode by tapping the dit or dah switch.

O? - Record Memory 3:

The memory is recorded by sending normally. Note that the keyer output is off during the recording and that the lower command sidetone is used. When complete, PAR the mem switch. The routine will be exited automatically after the 40th character is sent. The memory is saved in flash memory which means that it will still be there even if power is removed. If this menu item is entered by mistake, PAR the mem switch to exit without changing the memory.

Playing Memory 3:

Play memory 3 with a PAR of the memory switch. - the memory starts to play after the mem switch is released. A tap of either the dit or dah switch will stop the message play.

BA - Beacon Alternate between mem 1 and mem 2 mode:

This routine selects/deselects alternating the beacon play between memory 1 and memory 2.

ST - SideTone on/off:

Since most rigs have a built-in sidetone, it is handy to be able to silence the NorCal Keyer sidetone, especially when the tone is injected into the rig audio. Note that the sidetone will still be engaged during any menu or recording entry even if it has been turned off.

	Menu item	pressing a dit:	pressing a dah:
T?	Record memory 1	records a dit	records a dah

Figure 144. Mem + both menu (PAR mem to exit)

T? - Record Memory 1:

Enter record mode for memory 1 with a PAH of the mem switch and both paddle switches for 2 seconds. Hold the mem switch down, then squeeze both paddle switches simultaneously (they both must be down at the same time), then release the paddle, keep holding the mem switch until after 2 seconds the keyer will send **T?**. Memory 1 can now be recorded. Start sending your message. when complete, press the mem key. The memory is 40 characters long - recording will terminate automatically after the 40th character. If this menu item is entered accidentally, just PAR the mem switch to exit without recording.

Playing Memory 1:

First, hold the mem switch down, next, squeeze both paddle switches (they both must be down at the same time) then release the paddle and finally release the mem switch before 2 seconds elapse. The memory will start to play right after the mem switch release.

Notes:

To perform a full keyer reset (parameters to their default values, memories untouched):

1) remove power to the keyer
2) press and hold the mem switch
3) powerup the keyer keeping the switch depressed until the FB is sent.

One unique feature of the NorCal Keyer is 5 ditdah tune mode. If both paddles are held for at least 5 ditdahs and then released, the keyer will enter tune mode (key down, sidetone on). To exit, tap either the dit or dah. Thanks to Lew Paceley, N5ZE, for inventing this mode.