IN THE UNITED STATES DISTRICT COURT
FOR THE WESTERN DISTRICT OF TEXAS
WACO DIVISION

PARKERVISION, INC., *Plaintiff*	§	
-v-	§	**6:23-CV-00374-ADA**
REALTEK SEMICONDUCTOR CORP., *Defendant*	§	

SPECIAL MASTER'S REPORT AND RECOMMENDATION REGARDING CLAIM CONSTRUCTION

Before the Court are the Parties' claim construction briefs: Defendant Realtek Semiconductor Corporation's Opening and Reply briefs (ECF Nos. 39 and 51, respectively) and Plaintiff ParkerVision Inc.'s Response and Sur-Reply briefs (ECF Nos. 46 and 53, respectively). United States District Judge Alan D Albright referred these cases to the undersigned on May 10, 2024. ECF No. 55. The undersigned provided preliminary constructions for the disputed terms one day before the hearing. The undersigned held the *Markman* hearing on June 14, 2024. During that hearing, the undersigned informed the Parties of the final constructions for the disputed terms. *Id.* This Report and Recommendation does not alter any of those constructions.

I. DESCRIPTION OF THE ASSERTED PATENTS

Plaintiff asserts U.S. Patent Nos. 6,879,817, 7,865,177, and 9,118,528. The parties do not dispute any terms in the '177 Patent. The Asserted Patents are directed towards down-conversion of radio-frequency (RF) signals. Opening at 1, Response at 1.

ParkerVision Exhibit 2050
TI and NXP v. ParkerVision - IPR2024-00936

The undersigned previously construed terms from U.S. Patent No. 6,266,518, which appears to be related to the Asserted Patents and is also directed towards down-conversion. The undersigned incorporates the Description of the Asserted Patents from that order, which is reproduced below.[1]

The Asserted Patents describe and claim systems for down-conversion of a modulated carrier signal. '518 Patent at Abstract. Down-conversion is the process of recovering the baseband (audio) signal from the carrier signal after it has been transmitted to and received by the receiver. This process is referred to as "down-conversion" because a high frequency signal is being down-converted to a low frequency signal.

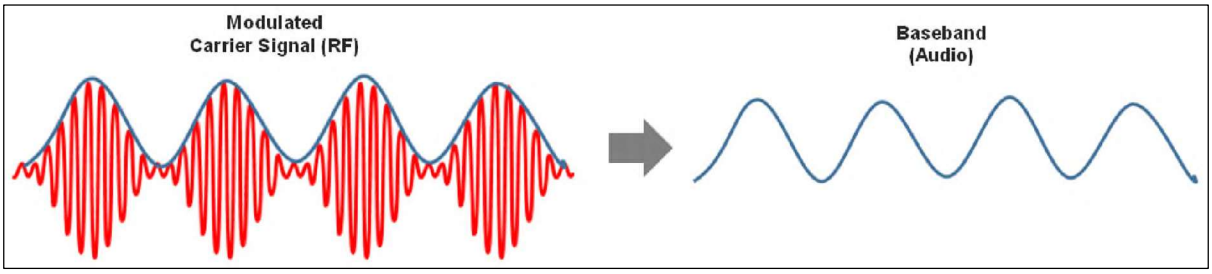

The Asserted Patents disclose at least two types of systems for down-conversion: (1) sample-and-hold (*i.e.*, voltage sampling) and (2) "energy transfer" (also known as "energy sampling"). The key difference between the two is that the former takes a small "sample" of the input signal while the latter takes a very large sample, *i.e.*, a large enough sample that a non-negligible amount of energy is transferred from the input signal. The following sub-sections describe each type of system, their respective operation, and compares them.

[1] It is worth noting that Plaintiff appears to agree that the description of the Asserted Patents is very similar to the asserted patents in prior case. Response at 1 n.1. As such, Plaintiff did not "repeat its discussion of the technology[.]" *Id.*

A. Circuit configuration of down-sampling systems: sample-and-hold and energy transfer.

Figure 78B depicts an exemplary sample-and-hold system while Figure 82B depicts an exemplary energy transfer system. ’518 Patent at 63:19–26 (sample-and-hold) and 7:63–64 (energy transfer).

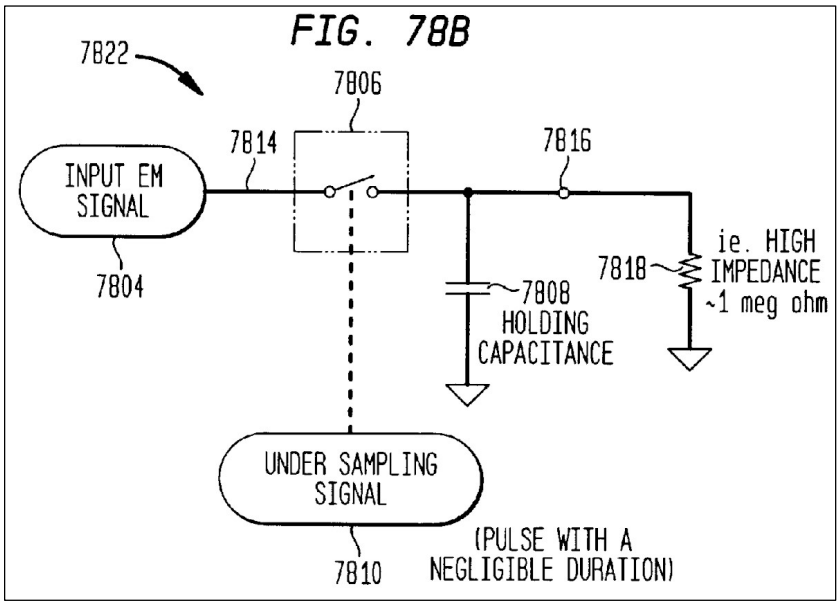

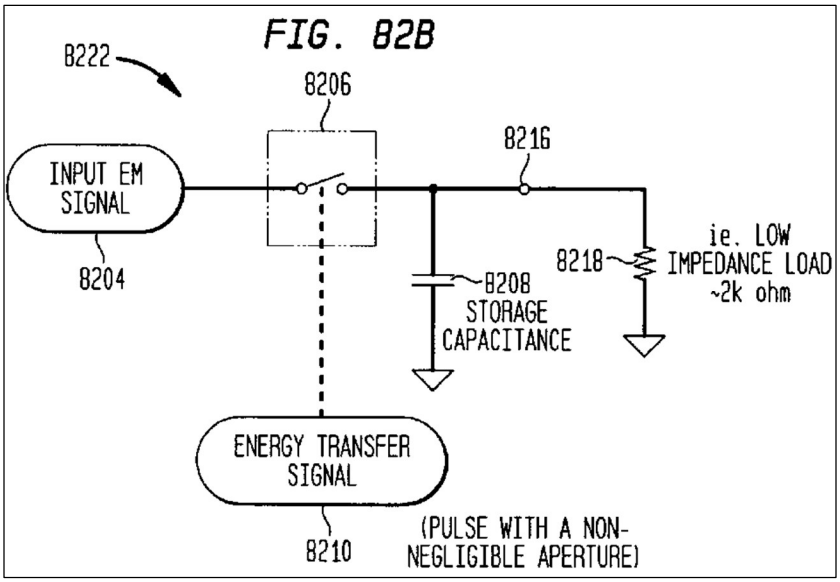

While Figures 78B and 82B depict that the respective circuits have a similar structure, their respective parameter values (*e.g.*, capacitor and load impedance values)—and concomitantly their

respective operation—are very different. It is important to note that the input signal, input EM signal, is the same in both figures.

The circuits in both figures include a switching module (7806 in Figure 78B and 8206 in Figure 82B). *Id.* at 62:65–66 (switching module 7806), 66:13–14 (switching module 8206). The switching module opens and closes (*i.e.*, turns off and on, respectively) based on under-sampling signal 7810 in Figure 78B and energy transfer signal 8210 in Figure 82B. *Id.* at 62:67–63:1 (under-sampling signal 7810), 66:24–26 (energy transfer signal 8210). When the switching module is "closed," input EM signal 7804 and input EM signal 8204 can propagate across the switching module to holding capacitance 7808 and storage capacitance 8208, respectively, but when the switching module is "open," input EM signals 7804/8204 cannot propagate across the switching module. While both switching module 7806 and switching module 8206 open and close, the duration that each module is closed differs significantly. The specifications of the Asserted Patents describe that under-sampling signal 7810 "includes a train of pulses having negligible apertures that tend towards zero time in duration." *Id.* at 63:1–3. The specification discloses an embodiment of the "negligible pulse width" as being "in the range of 1–10 p[ico]sec[onds] ("ps") for under-sampling a 900 MHz signal." *Id.* at 63:3–5. By contrast, the specifications describe that energy transfer signal 8210 "includes a train of energy transfer pulses having <u>non-negligible</u> pulse widths that tend away from zero time in duration." *Id.* at 66:26–28 (emphasis added). The specification discloses an embodiment where the "non-negligible pulse" is approximately 550 ps for a 900 MHz signal.

The specifications describe that holding capacitance 7808 and storage capacitance 8208 are capacitors that charge when switching module 7804 and switching module 8204, respectively, are closed. *Id.* at 63:10–13 (holding capacitance 7808), 66:38–42 (storage capacitance 8208). The

specifications also disclose that holding capacitance 7808 "preferably has a small capacitance value" and disclose an embodiment wherein holding capacitance 7808 has a value of 1 picoFarad ("pF"). *Id.* at 63:9–15. By contrast, the specifications disclose that storage capacitance 8208 "preferably has the capacity to handle the power being transferred" and disclose an embodiment wherein storage capacitance 8208 has a value "in the range of 18 pF." *Id.* at 66:38–49.

The specifications describe that holding capacitance 7808 and storage capacitance 8208 discharge through load 7812 and load 8212 when switching module 7804 and switching module 8204, respectively, are open. *See id.* at 63:19–26 (load 7812), 66:61–65 (load 8212). Figure 78B depicts that "high impedance" load 7818 has an impedance of approximately 1 MΩ while Figure 82B depicts that "low impedance" load 8218 has an impedance of approximately 2 kΩ. The specifications describe that "[a] high impedance load is one that is relatively insignificant to an output drive impedance of the system for a given output frequency. A low impedance load is one that is relatively significant." *Id.* at 66:58–61.

B. Operation of down-converting systems

At a very high level, both systems operate similarly. In particular, when the switching module (switching modules 7806 / 8206) is closed, the input signal (input EM signal 7804 / 8204) propagates to the capacitor (holding capacitance 7808 and storage capacitance 8208) and charge the voltage across the capacitor to the voltage of input signal. But when the switching module is open, the input signal cannot propagate to the capacitor, *i.e.*, cannot charge the voltage across the capacitor to the voltage of the input signal. Rather, the charge on the capacitor discharges through the load impedance (load 7818 / 8218).

While both systems operate similarly at a high level, differences in (1) the width of the sampling aperture, (2) value of the capacitor, and (3) value of the load are what dictates whether the system operates as a sample-and-hold system or an energy transfer system.

1. Operation of sample-and-hold system

In a sample-and-hold system, the sampling aperture in under-sampling signal 7810 is negligible, which means only a small amount of charge from input EM signal 7804 propagates to the holding capacitance 7808 before switching module 7806 opens. *Id.* at 62:63–63:8. Because the sampling aperture has a negligible (*i.e.*, very small) width, there is only enough time to take a "sample" of input EM signal 7804, *i.e.*, only a small amount of charge is transferred to holding capacitor 7808. Given that only a small amount of charge is transferred to the capacitor, the value of holding capacitor 7808 needs to be relatively low in order for the voltage across holding capacitance 7808 to change to the voltage of input EM signal 7804. More specifically, the relationship between charge (Q) and voltage (V) across a capacitor (with a capacitance of C) is $Q = C * V$, or $Q / C = V$. As such, if the capacitance C is large, more charge Q is needed in order to increase the voltage to V. For example, for the same amount of charge, if the capacitance is 2C in one case and C in other case, the voltage in the former case will be half the voltage of the voltage in the latter case. *Id.* at 65:29–35. Therefore, to ensure that the value of holding capacitance 7808 does not limit the voltage across the capacitor, the value of holding capacitance 7808 needs to be, as described above, low. *Id.* at 63:9–15.

When sampling module 7806 is open, the charge on holding capacitance 7808 discharges through load impedance 7818. *See id.* at 63:19–26. When the value of load impedance 7818 is high, the charge on holding capacitance 7808 discharges very slowly as compared to when the load impedance is low. More specifically, the time to discharge a capacitor is related to $R * C$

(also known as the time constant τ) where R is the value of the load impedance. Using the exemplary values depicted in Figures 78B (1 MΩ) and 82B (2 kΩ), assuming that the capacitance is the same, it will take 500 times longer to discharge the capacitor with the 1 MΩ load impedance as compared to the circuit with the 2 kΩ load impedance. Because it takes significantly longer to discharge the capacitor using a 1 MΩ load impedance (as compared to the 2 kΩ load impedance), the 1 MΩ load impedance "holds" the charge.

To summarize, in a sample-and-hold down-sampling system, a negligible sampling aperture for switching module 7806 and small value for holding capacitance 7808 only allows for a "sample" of the voltage of the input EM signal 7804 when switching module 7806 is closed. And because of the high value of load impedance 7818, the capacitor "holds" that value when switching module 7806 is open.

2. Operation of energy transfer system

As described above, in an energy transfer system, the sampling aperture is non-negligible (*e.g.*, 550 ps versus 1 ps for the sample-and-hold system for a 900 MHz input signal). Therefore, there is significantly more time to transfer charge from the input signal to storage capacitance 8208. *Id.* at 66:42–44. Because significantly more charge is transferred to the capacitor, the value of storage capacitance 8208 can be larger, in spite of the fact that charge and voltage are inversely related (*i.e.*, $V = {}^{Q}/_{C}$). The fact that this system transfers a large amount of charge—or energy—to the capacitor gives rise to the name "energy transfer" system.

When sampling module 8206 is open, the charge on storage capacitance 8208 discharges through load impedance 8218. *See id.* at 66:61–65. Because the load impedance in an energy transfer system is "low," *e.g.*, 2 kΩ, the charge on storage capacitance 8208 discharges much faster

than the charge on a capacitor in a sample-and-hold system, *e.g.*, 500 times faster as compared to using a 1 MΩ load impedance.

To summarize, in an energy transfer down-sampling system, a non-negligible sampling aperture for switching module 8206 and a high value for storage capacitance 8208 allows for a large amount of charge—or energy—to be transferred from the input signal.

C. Comparison of sample-and-hold and energy transfer systems

The following table summarizes key differences between sample-and-hold and energy transfer systems.

Parameter	Sample-and-hold	Energy transfer
Sampling aperture	Negligible (*e.g.*, 1–10 ps)	Non-negligible (*e.g.*, 550 ps)
Capacitor	Holding capacitance (*e.g.*, 1 pF)	Storage capacitance (*e.g.*, 18 pF)
Load impedance	High (*e.g.*, ~1 MΩ)	Low (*e.g.*, ~2 kΩ)

It is important to emphasize that differences in the set of parameter values determines whether a system functions as a sample-and-hold system or an energy transfer system. For example, there is nothing special in the structure of a holding capacitance as compared to the structure of a storage capacitance. A circuit designer could, in theory, swap the holding capacitance in a sample-and-hold system with the storage capacitance in an energy transfer system and still have a sample-and-hold system by appropriately adjusting the sampling aperture and load impedance to "match" the larger capacitor value of the holding capacitance.

It is important to note that changing one parameter without adjusting the other parameters will prevent each system from operating as intended or will have other problems. For example, using a non-negligible sampling aperture in a sample-and-hold system is unnecessary as the holding capacitance can be fully charged (to the voltage of the input signal) with a negligible

aperture, but using a non-negligible sampling aperture may distort or destroy the input EM signal by transferring too much of its energy to the holding capacitance. *Id.* at 62:30–39.

Even worse, using a high load impedance in an energy transfer system or a low load impedance in a sample-and-hold system could result in a system with poor performance. *See, e.g.*, *id.* at 65:52–55. More specifically, in the latter situation, the low value of the holding capacitance combined with a low load impedance means that its corresponding time constant τ is very low, which means that the holding capacitance may discharge significantly when the switching module is open. As a result, the down-converted signal "cannot provide optimal voltage reproduction, and has relatively negligible power available at the output." *Id.* at 64:49–51.

In the former situation, the high value of the storage capacitance combined with a high load impedance means that its corresponding time constant τ is very high; therefore, it will take considerably more time (as compared to a low load impedance) to discharge the storage capacitance. This may result in less than optimal voltage reproduction, *e.g.*, when the voltage of the input EM signal is lower than the voltage across the capacitor. Furthermore, the down-converted signal could have substantially less power (*e.g.*: V^2/R; ~2 mV and 1 MΩ) than the energy transfer system with a low impedance load (*e.g.*: V^2/R; ~2 mV and 2 kΩ) or even the sample-and-hold system with a high impedance load (*e.g.*: V^2/R; ~5 mV and 1 MΩ). *See id.* at 67:28–33.

II. LEGAL STANDARD

A. General principles

The general rule is that claim terms are generally given their plain-and-ordinary meaning. *Phillips v. AWH Corp.*, 415 F.3d 1303, 1312 (Fed. Cir. 2005) (*en banc*); *Azure Networks, LLC v.*

CSR PLC, 771 F.3d 1336, 1347 (Fed. Cir. 2014), *vacated on other grounds*, 575 U.S. 959, 959 (2015) ("There is a heavy presumption that claim terms carry their accustomed meaning in the relevant community at the relevant time.") (internal quotation omitted). The plain-and-ordinary meaning of a term is the "meaning that the term would have to a person of ordinary skill in the art in question at the time of the invention." *Phillips*, 415 F.3d at 1313.

The "only two exceptions to [the] general rule" that claim terms are construed according to their plain-and-ordinary meaning are when the patentee (1) acts as his/her own lexicographer or (2) disavows the full scope of the claim term either in the specification or during prosecution. *Thorner v. Sony Computer Ent. Am. LLC*, 669 F.3d 1362, 1365 (Fed. Cir. 2012). The Federal Circuit has counseled that "[t]he standards for finding lexicography and disavowal are exacting." *Hill-Rom Servs., Inc. v. Stryker Corp.*, 755 F.3d 1367, 1371 (Fed. Cir. 2014). To act as his/her own lexicographer, the patentee must "clearly set forth a definition of the disputed claim term" and "'clearly express an intent' to [define] the term." *Thorner,* 669 F.3d at 1365.

"Like the specification, the prosecution history provides evidence of how the PTO and the inventor understood the patent." *Phillips*, 415 F.3d at 1317. "[D]istinguishing the claimed invention over the prior art, an applicant is indicating what a claim does not cover." *Spectrum Int'l, Inc. v. Sterilite Corp.*, 164 F.3d 1372, 1379 (Fed. Cir. 1998). The doctrine of prosecution disclaimer precludes a patentee from recapturing a specific meaning that was previously disclaimed during prosecution. *Omega Eng'g, Inc. v. Raytek Corp.*, 334 F.3d 1314, 1323 (Fed. Cir. 2003). "[F]or prosecution disclaimer to attach, our precedent requires that the alleged disavowing actions or statements made during prosecution be both clear and unmistakable." *Id.* at 1325–26. Accordingly, when "an applicant's statements are amenable to multiple reasonable

interpretations, they cannot be deemed clear and unmistakable." *3M Innovative Props. Co. v. Tredegar Corp.*, 725 F.3d 1315, 1326 (Fed. Cir. 2013).

A construction of "plain and ordinary meaning" may be inadequate when a term has more than one "ordinary" meaning or when reliance on a term's "ordinary" meaning does not resolve the parties' dispute. *O2 Micro Int'l Ltd. v. Beyond Innovation Tech. Co*., 521 F.3d 1351, 1361 (Fed. Cir. 2008). In that case, the Court must describe what the plain-and-ordinary meaning is. *Id.*

"Although the specification may aid the court in interpreting the meaning of disputed claim language . . ., particular embodiments and examples appearing in the specification will not generally be read into the claims." *Constant v. Advanced Micro-Devices, Inc.*, 848 F.2d 1560, 1571 (Fed. Cir. 1988). "[I]t is improper to read limitations from a preferred embodiment described in the specification—even if it is the only embodiment—into the claims absent a clear indication in the intrinsic record that the patentee intended the claims to be so limited." *Liebel-Flarsheim Co. v. Medrad, Inc.*, 358 F.3d 898, 913 (Fed. Cir. 2004).

Although extrinsic evidence can be useful, it is "less significant than the intrinsic record in determining 'the legally operative meaning of claim language.'" *Phillips*, 415 F.3d at 1317 (quoting *C.R. Bard, Inc. v. U.S. Surgical Corp.*, 388 F.3d 858, 862 (Fed. Cir. 2004)). Technical dictionaries may be helpful, but they may also provide definitions that are too broad or not indicative of how the term is used in the patent. *Id.* at 1318. Expert testimony may also be helpful, but an expert's conclusory or unsupported assertions as to the meaning of a term are not. *Id.*

B. Claim differentiation

Under the doctrine of claim differentiation, a court presumes that each claim in a patent has a different scope. *Phillips*, 415 F.3d at 1314–15. The presumption is rebutted when, for

example, the "construction of an independent claim leads to a clear conclusion inconsistent with a dependent claim." *Id.* The presumption is also rebutted when there is a "contrary construction dictated by the written description or prosecution history." *Seachange Int'l., Inc. v. C-COR, Inc.*, 413 F.3d 1361, 1369 (Fed. Cir. 2005). The presumption does not apply if it serves to broaden the claims beyond their meaning in light of the specification. *Intellectual Ventures I LLC v. Motorola Mobility LLC*, 870 F.3d 1320, 1326 (Fed. Cir. 2017).

C. Indefiniteness

"[I]ndefiniteness is a question of law and in effect part of claim construction." *ePlus, Inc. v. Lawson Software, Inc.*, 700 F.3d 509, 517 (Fed. Cir. 2012). Patent claims must particularly point out and distinctly claim the subject matter regarded as the invention. 35 U.S.C. § 112, ¶ 2. A claim, when viewed in light of the intrinsic evidence, must "inform those skilled in the art about the scope of the invention with reasonable certainty." *Nautilus Inc. v. Biosig Instruments, Inc.*, 572 U.S. 898, 910 (2014). If it does not, the claim fails § 112, ¶ 2 and is therefore invalid as indefinite. *Id.* at 901. Whether a claim is indefinite is determined from the perspective of one of ordinary skill in the art as of the time the application was filed. *Id.* at 911.

In the context of a claim governed by § 112, ¶ 6, the claim is indefinite if the claim fails to disclose adequate corresponding structure to perform the claimed functions. *Williamson*, 792 F.3d at 1351–52. The disclosure is inadequate when one of ordinary skill in the art "would be unable to recognize the structure in the specification and associate it with the corresponding function in the claim." *Id.* at 1352. Computer-implemented means-plus-function claims are indefinite unless the specification discloses an algorithm to perform the function associated with the limitation. *Noah Sys., Inc. v. Intuit Inc.*, 675 F.3d 1302, 1319 (Fed. Cir. 2012).

III. LEGAL ANALYSIS

A. Term #1: "storage element" / "energy storage element"

Term	Plaintiff's Proposed Construction	Defendant's Proposed Construction
#1: "storage element" / "energy storage element" U.S. Patent No. 6,879,817, Claims 15, 21, 22, 26, 27; U.S. Patent No. 9,118,528, Claims 1, 8, 9, 18, 19, 26, 27, 36 Proposed by Both Sides	"an element of an energy transfer system that stores non-negligible amounts of energy from an input electromagnetic signal"	"an element of a system that stores non-negligible amounts of energy from an input electromagnetic signal"

Judge Albright, the undersigned, and Judge Gilliland all previously construed this term as "an element of an energy transfer system that stores non-negligible amounts of energy from an input electromagnetic signal," which is Plaintiff's proposed construction. *ParkerVision, Inc. v. Intel Corp.*, No. 6:20-cv-00108, ECF No. 75 at 4 (W.D. Tex. Jan. 28, 2021); *ParkerVision, Inc. v. Intel Corp.*, No. 6:20-cv-00562, ECF No. 75 at 2 (W.D. Tex. Oct. 22, 2021); *ParkerVision, Inc. v. HiSense Co., Ltd.*, No. 6:20-cv-00870, ECF No. 51 at 5 (W.D. Tex. Oct. 29, 2021); *ParkerVision, Inc. v. LG Elecs.*, No. 6:21-cv-00520, ECF No. 55 at 28 (W.D. Tex. June 21, 2022).

The Federal Circuit subsequently construed "storage element" to mean "an element that stores nonnegligible amounts of energy from an input electromagnetic signal," which is Defendant's proposed construction. *ParkerVision, Inc. v. Vidal*, 88 F.4th 969, 977 (Fed. Cir. 2023).

The Parties' Positions:

Defendant contends that Federal Circuit already construed this term. Opening at 5 (citing *Vidal*, 88 F.4th at 977). More specifically, Defendant contends that the Federal Circuit held that the patentees acted as their own lexicographer for the term "storage element" in another patent, U.S. Patent No. 7,110,444, based on an unambiguous definition in a patent application incorporated by reference, now U.S. Patent No. 6,061,551. *Id.* at 6–7.

Defendant contends that while its proposed construction is the Federal Circuit's construction, Plaintiff proposes a construction that the Federal Circuit already expressly rejected. *Id.* Defendant contends that because Federal Circuit's construction controls here, the Court should reject Plaintiff's new attempt to re-litigate the identical issue should be rejected. *Id.* at 5–6 (citing cases).

Defendant also contends that Plaintiff previously argued in an IPR that the now '551 Patent "provides an explicit definition" for this term. *Id.* at 8. Defendant contends that Plaintiff has not explained why it previously argued that the '551 Patent defined the term, but now argues for a narrower construction in this case. *Id.*

In its response, Plaintiff first contends that although the Federal Circuit construed the term according to Defendant's proposed construction, another appeal for an IPR relating to the same patent and claim term is currently pending before the Federal Circuit. Response at 2.

Plaintiff contends that the intrinsic evidence supports the Court's prior construction, namely, that the specification "*expressly* distinguishes the claimed 'storage' module from a 'holding' module," in order to "readily distinguish between the capacitors of the two systems[.]" *Id.* at 2–3 (emphasis in Plaintiff's brief); *see also id.* at 3–5, 7–8. Plaintiff also contends that that the patentees did not act as their own lexicographer, but rather that the alleged lexicographical

statement "allows a POSITA to identify whether a *system* is an energy transfer system or a sample-and-hold system based on what *component* (capacitor) is being used in that system." *Id.* at 5–6 (emphasis in Plaintiff's brief). Plaintiff contends that "like other defendants before it, [Defendant] does *not* dispute that a 'storage' module is a module found only in an energy transfer system." *Id.* at 6 (emphasis in Plaintiff's brief).

Plaintiff contends that Defendant's proposed construction is technically and legally wrong. *Id.* More specifically, Plaintiff contends that Defendant's proposed construction would "cover any system in the world that stored non-negligible amounts of energy." *Id.* Plaintiff contends that is incorrect because there are only two systems disclosed in the patent—energy transfer and sample-and-hold—and because a "holding" element is only used in the latter, "then a 'storage' element must necessarily be 'an element *of an energy transfer system*.'" *Id.* (emphasis in Plaintiff's brief).

In its reply, Defendant contends that Plaintiff "does not dispute that the Federal Circuit's construction controls, nor does [Plaintiff] dispute that the patents at issue here are subject to the same analysis as the patent already analyzed by the Federal Circuit." Reply at 1.

With respect to Plaintiff's argument that there is a pending appeal for an IPR relating to the same patent and claim term, Defendant contends that Plaintiff "provides no reason for the Federal Circuit to reverse itself from a decision it made only four months ago." *Id.* at 2. Defendant further contends that "[t]he Federal Circuit's prior construction of 'storage element' is binding on subsequent panels at the Federal Circuit as well as this Court." *Id.* (citing cases). Defendant contends that Plaintiff does not provide any reason for a different outcome in this case. *Id.* at 2–3 (citing *Nestle USA, Inc. v. Steuben Foods, Inc.*, 884 F.3d 1350, 1352 (Fed. Cir. 2018)).

Defendant contends that the "Federal Circuit has already rejected [Plaintiff's] argument that 'the specification, when read as a whole, restricts a "storage element" to an element of an

energy transfer system.'" *Id.* at 3 (citing *Vidal*, 88 F.4th at 977). Defendant contends that the "Federal Circuit has already concluded that the specification's statement that 'storage modules… refer to systems that store non-negligible amounts of energy from an input EM signal' is definitional, not comparative as [Plaintiff] now argues." *Id.*

Defendant contends that Plaintiff previously acknowledged in a prior litigation that this term was not limited to an energy transfer system and that Plaintiff previously argued for Defendant's proposed construction in that prior litigation. *Id.*

Defendant contends that the patent expressly defines this term without limiting it to an energy transfer system. *Id.* (citing '528 Patent at 73:9–22; *In re Imes*, 778 F.3d 1250, 1252–53 (Fed. Cir. 2015)).

With respect to Plaintiff's argument that a "storage" module is limited to an energy transfer system while a "holding" module is limited to a sample-and-hold system, Defendant contends that the specification depicts that the "storage" and "holding" modules are "the same component: a capacitor with one side grounded and the other side immediately following a switch" and that Plaintiff concedes as much. *Id.* at 4 (citing Response at 4–5). Defendant contends that "the specification uses these terms interchangeably, describing both 'sampling' embodiments and 'holding' modules as performing 'stor[age].'" *Id.* (citing '528 patent at 65:23–27, 67:8-11, 73:16–20, 115:17–19).

Defendant contends that both the energy storage system and the sample-and-hold system "involve storing energy in a capacitor following a switch, where that 'energy' can take 'the form of charge that is transferred to the holding capacitance." *Id.* at 4–5 (citing '528 Patent at 70:40–42). Defendant contends that Plaintiff "cites no evidence that compels narrowing 'storage

element' to an 'energy storage system'" that would justify limiting the claim term to the "energy storage system" embodiment. *Id.* (citing *Thorner*, 669 F.3d at 1365).

In its sur-reply, Plaintiff contends that although

> the Federal Circuit held that "a 'storage element' is 'an element of a system that stores non-negligible amounts of energy from an input EM signal'" in an appeal related to IPR2020-01265, [Plaintiff] notes that the Federal Circuit set a date of June 9, 2024 for oral argument in the appeal related to IPR2021-0990 in which the term "storage element" will once again be addressed.

Sur-Reply at 1.

<u>The Undersigned's Analysis</u>

After reviewing the parties' arguments and considering the applicable law, the undersigned agrees with Defendant that "storage element" / "energy storage element" should be construed as "an element of a system that stores non-negligible amounts of energy from an input electromagnetic signal."

The Federal Circuit held the patentees acted as their own lexicographer. *Vidal*, 88 F.4th at 976–77. The Federal Circuit analyzed the following paragraph from the '551 Patent:

> FIG. 82A illustrates an exemplary energy transfer system 8202 for down-converting an input EM signal 8204. The energy transfer system 8202 includes a switching module 8206 and a storage module illustrated as a storage capacitance 8208. The terms storage module and storage capacitance, as used herein, are distinguishable from the terms holding module and holding capacitance, respectively. Holding modules and holding capacitances, as used above, identify systems that store negligible amounts of energy from an under-sampled input EM signal with the intent of "holding" a voltage value. Storage modules and storage capacitances, on the other hand, refer to systems that store non-negligible amounts of energy from an input EM signal.

Id. (quoting '551 Patent at 66:55–67). This paragraph also appears verbatim in the '528 Patent. '528 Patent at 73:9–21. Furthermore, both the '528 Patent and the '817 Patent incorporate the

’551 Patent by reference. ’528 Patent at 1:30–34, ’817 Patent at 33:9–12 (incorporating by reference to the application number 09/176,022).

Because the Federal Circuit concluded that the patentees acted as their own lexicographer and that “storage element” should be construed as “an element of a system that stores non-negligible amounts of energy from an input EM signal” based on a paragraph in the ’551 Patent, which is incorporated into both the ’528 and ’817 Patents, the Federal Circuit’s determinations are binding in this case. *Kinetic Concepts, Inc. v. Smith & Nephew, Inc.*, 688 F.3d 1342, 1363 (Fed. Cir. 2012) (“Thus, we have already construed the claims to include this limitation and that legal conclusion was binding on the district court and is binding on this panel.”).

For that same reason, the undersigned disagrees with Plaintiff that a pending Federal Circuit decision regarding the same term for same patent (for IPR2021-0990) changes whether the Circuit’s prior conclusion is binding. Rather, the holding in *Kinetic Concepts* is that the Federal Circuit’s holding in one case is binding upon district courts and future Federal Circuit panels. *Id.* And Plaintiff did not provide any reasons why the Federal Circuit’s holding in *Vidal* should not apply in this case.

Therefore, for the reasons described above, the undersigned concludes that the recommended construction for “storage element” / “energy storage element” should be “an element of a system that stores non-negligible amounts of energy from an input electromagnetic signal.”[2]

[2] During the hearing, the undersigned asked the parties if they anticipated that they might have difficulty applying the Circuit’s construction in *Vidal*, which is the undersigned’s recommended construction, given that the Circuit’s construction does not provide the necessary context of the system, *e.g.*, energy-transfer system or sample-and-hold system, that would help a POSITA determine whether the system contains a “storage module” or an “holding module.” Hearing Tr. (Rough) at 2:12–3:24. The parties indicated that they did not believe, at that moment, that there would be any difficulties applying that construction. *Id.* at 3:25–8:6.

B. Term #2: "the energy discharged during any given discharge cycle is not completely discharged"

Term	Plaintiff's Proposed Construction	Defendant's Proposed Construction
#2: "the energy discharged during any given discharge cycle is not completely discharged" U.S. Patent No. 9,118,528, Claims 9, 27 Proposed by Plaintiff	Plain-and-ordinary meaning wherein the plain-and-ordinary meaning is "the energy that could potentially be discharged during any given discharge cycle is not completely discharged"	Plain-and-ordinary meaning

Judge Albright previously construed this term as not indefinite, plain-and-ordinary meaning, wherein the plain-and-ordinary meaning is "the energy that could potentially be discharged during any given discharge cycle is not completely discharged." *Intel*, No. 6:20-cv-00108, ECF No. 75 at 7. Judge Gilliland construed this term as not indefinite, plain-and-ordinary meaning. *LG Elecs.*, No. 6:21-cv-00520, ECF No. 55 at 42.

<u>The Parties' Positions:</u>

Defendant contends that Plaintiff's proposed construction improperly rewrites the claim. Opening at 9. Defendant contends that "[t]his uncomplicated term must take its plain and ordinary meaning." *Id.* More specifically, Defendant contends that "[n]either the specification nor the prosecution history provide anything to vary this plain language." *Id.* Defendant contends that, by contrast, the specification "simply teaches that when a 'capacitor 17506 does not completely discharge, there is an initial condition present for the next acquisition cycle.'" *Id.* (quoting '528 Patent at 147:25–39). Defendant further contends that the term is "not difficult or too technical in nature such that a construction would help the jury's understanding." *Id.* at 10 (quoting *BCS*

Software, LLC v. Open Text, Inc., No. 6:21- CV-00050-ADA, 2021 WL 8202515, at *1 (W.D. Tex. Oct. 20, 2021)).

Defendant contends that Plaintiff's proposed construction rewrites the claim by improperly adding limitations. *Id.* Furthermore, Defendant contends that Plaintiff's proposed construction "introduces ambiguity into an otherwise clear phrase." *Id.*

Defendant contends that Plaintiff's proposed construction is "much more than a minor correction or fix to a typographical error—it is a substantive change that alters the scope," which is improper. *Id.* at 11.

In its response, Plaintiff contends that in the prior *Intel* case, the Court provided additional clarification as recited in Plaintiff's proposed construction. Response at 7–8 (citing *Intel*, No. 6:20-cv-00108, ECF No. 75 at 4).

With respect to Defendant's argument that Plaintiff's proposed construction rewrites the claim term, Plaintiff contends that Defendant "fails to analyze the term in the context of the full claim language and in view of the specification." *Id.* at 9. More specifically, Plaintiff contends that Figure 82B depicts the circuit claimed in Claim 9.

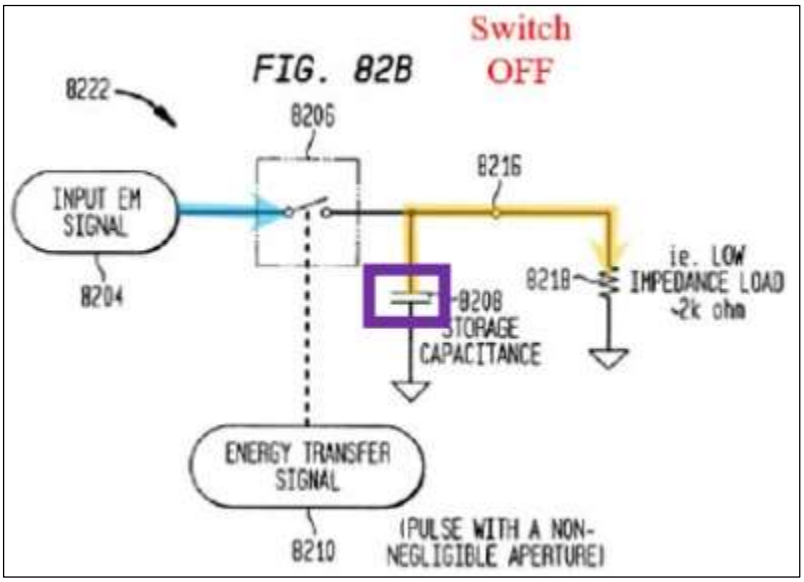

Id. (citing '528 Patent at Figure 82B (annotations in Plaintiff's brief)). Plaintiff contends that Claim 8 recites that "a portion of the transferred energy is discharged during the discharging part of the cycle for each respective switching device when the switching device is off," and Claim 9 further recites: "for each respective storage element, the energy discharged during any given discharge cycle is not completely discharged, with the remaining undischarged energy from the given discharge cycle becoming an initial condition for the next charging cycle." *Id.*

Plaintiff contends that the specification "discusses that when the storage element (capacitor) is not completely discharged, the energy remaining in the storage element provides the initial condition for the next charging (acquisition) cycle." *Id.* at 9–10 (citing '528 Patent at 147:25–39). Given that disclosure, Plaintiff contends that:

> In context, the term "the energy discharged during any given discharge cycle is not completely discharged" simply means that out of all of the energy stored in the storage element available for discharge (the energy that could potentially be discharged), not all of the energy is discharged during any given discharge cycle. In other words, there is some energy left in the storage element after a discharge cycle.

Response at 10. Plaintiff contends that this disclosure is consistent with the claim language's requirement that the "the *remaining undischarged energy* from the given discharge cycle becoming an initial condition for the next charging cycle[.]" *Id.* (emphasis in Plaintiff's brief).

In its reply, Defendant contends that Plaintiff's "reliance on the specification is unavailing because the cited excerpt has nothing to do with the claimed term." Reply at 5. Defendant contends that the term at issue is "not about whether energy in a capacitor discharges completely. Rather, the term at issue is about whether the energy discharged during any given discharge cycle is completely discharged[,]" and Plaintiff does not cite any passages from the specification regarding this point. *Id.* at 5–6.

Defendant contends that Plaintiff's proposed construction tacitly concedes that the term contains an error and that its proposed construction attempts to correct that error by adding "that could potentially be discharged." *Id.* at 6. Defendant contends that despite that admission, Plaintiff does not argue the relevant standard has been met for judicial correction. *Id.* More specifically, Defendant contends that Plaintiff "does not identify any disclosure in the specification on 'energy that could be discharged.' Rather, it cites Fig. 82B, which illustrates only that energy can be discharged from a capacitor." *Id.* Defendant contends that Plaintiff's reliance on passages related to Figure 175A "says nothing about the claim term" or "suggest anything beyond the plain language of claim." *Id.*

In its sur-reply, Plaintiff contends that Defendant "wrongly asserts" that Plaintiff's proposed construction seeks to correct an error. Sur-Reply at 2. Plaintiff contends that it is not seeking correction, but that its proposed construction adopts the Court's construction in the *Intel* case which "simply provides clarification regarding the plain-and-ordinary meaning of the term." *Id.* Plaintiff contends that, by contrast, Defendant does not explain why construction is required for this term and what the plain-and-ordinary meaning is. *Id.*

With respect to Defendant's arguments regarding the specification's disclosures, Plaintiff contends that "rather than focusing on how the technology actually works, [Defendant] resorts to semantic games." *Id.* at 3. Plaintiff contends that Defendant's "purported distinction" between "<u>energy in a capacitor</u> discharges completely" and "<u>the energy discharged during any given discharge cycle</u> is completely discharged" "lacks substance." *Id.* (emphasis in Plaintiff's brief). Plaintiff contends that Defendant overlooks the fact that the "claim language clearly pertains to storage elements (*e.g.*, capacitors): 'for each respective storage element, the energy discharged during any given discharge cycle is not completely discharged[.]'" *Id.*

Plaintiff contends that it is irrelevant whether the patent uses the exact phrase, but that what is important is that "[i]n the context of a storage element (e.g., a capacitor), a POSITA understands what 'energy discharged' and 'energy that could be discharged' means." *Id.*

The Undersigned's Analysis

After reviewing the parties' arguments and considering the applicable law, the undersigned adopts Plaintiff's proposed construction of plain-and-ordinary meaning wherein the plain-and-ordinary meaning is "the energy that could potentially be discharged during any given discharge cycle is not completely discharged" for the reasons that follow. ***First***, with respect to the first part of the construction, the "heavy presumption" is that terms should be construed according to their plain-and-ordinary meaning. *Azure Networks*, 771 F.3d at 1347.

Second, neither party alleges lexicography or disclaimer, which are the only two exceptions to the general rule that a term should be construed as having its plain-and-ordinary meaning. *Thorner*, 669 F.3d at 1365.

Third, the addition of "that could potentially be" in the undersigned's construction is not a correction, but rather is a clarification for the jury. *Sulzer Textil A.G. v. Picanol N.V.*, 358 F.3d 1356, 1366 (Fed. Cir. 2004) ("The district court simply must give the jury guidance that can be understood and given effect by the jury once it resolves the issues of fact which are in dispute."). Although the claim language is not necessarily a model of clarity for a lay jury to understand, the specification clearly describes what is being claim in Claim 9. *Vitronics Corp. v. Conceptronic, Inc.*, 90 F.3d 1576, 1583 (Fed. Cir. 1996) ("Thus, the specification is always highly relevant to claim construction analysis. Usually it is dispositive; it is the single best guide to the meaning of a disputed term.").

Figure 82A depicts the operation of an exemplary storage element with a low impedance load to illustrate how the storage element discharges.

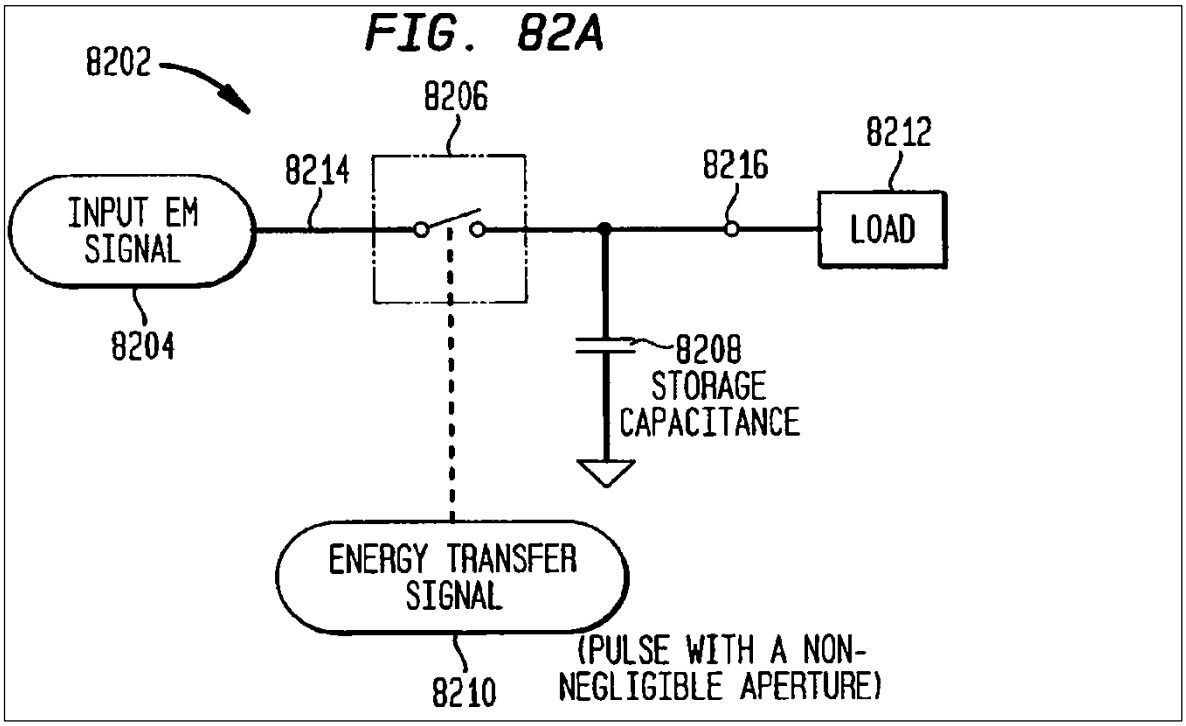

Before switch module 8206 opens, storage capacitance 8208 stores charge transferred from input EM signal 8204. '528 Patent at 73:41–43. When switch module 8206 is open, storage capacitance 8208 does not continue to charge, but can discharge through load 8212. *See, e.g.*, *id.* at 73:54–60. As such, the total amount of charge stored on storage capacitance 8208 that could be potentially discharged through load 8212 is the amount of charge stored on storage capacitance 8208 the instant switch module 8206 opens. If switch module 8206 remains open for a long time, storage capacitance 8208 will fully discharge such that the amount of charge stored on it will be zero. But if switch module 8206 closes before storage capacitance 8206 is fully discharged, the remaining charge on storage capacitance 8206 forms the initial condition—or starting point—for the next charging (or discharging) cycle.

The claim language mirrors this description. For example, the relevant portion of Claim 8 recites

> said portion of energy that is distinguishable from noise is [1] transferred to the respective storage element when the switch is on during the charging cycle, and [2] a portion of the transferred energy is discharged during the discharging part of the cycle for each respective switching device when the switching device is off.

'528 Patent, Claim 8 (annotations added). The phrase corresponding to the first annotation describes that a storage element, *e.g.*, storage capacitance 8208, charges during the charging cycle, *i.e.*, when switch module 8206 is closed. The phrase corresponding to the second annotation describes that a storage element, *e.g.*, storage capacitance 8208, discharges during the discharging cycle, *i.e.*, when switch module 8206 is open.[3] Notably, however, Claim 8 does not require that either all or only some of the charge stored on the storage element must be discharged, but rather Claim 8 is broad enough to cover either situation.

The relevant portion of Claim 9 recites "wherein for each respective storage element, the energy discharged during any given discharge cycle is not completely discharged, with the remaining undischarged energy from the given discharge cycle becoming an initial condition for the next charging cycle." *Id.*, Claim 9. The phrase at the end of Claim 9 ("remaining undischarged energy from the given discharge cycle becoming an initial condition for the next charging cycle") indicates that only a portion of the charge that was stored on the storage element when the switch opened discharged during the discharge cycle. In other words, of the charge which was stored on the claimed storage element when the switch opened—which represents the total amount of energy that could potentially be discharged during any given discharge cycle—only a portion of that charge is discharged while the remainder is not. The remaining portion of undischarged energy at

[3] Although Claims 1 and 8 do not expressly specify a load impedance, in order for the storage element to discharge when the switch is open, the charge stored on the storage element must discharge through an impedance connected to the storage element.

the beginning of the charging cycle becomes the starting point, *i.e.*, the initial condition, for the charging cycle.

Furthermore, a POSITA, putting together the phrase at the beginning of the relevant portion of Claim 9 ("for each respective storage element") with the end of the relevant portion ("remaining undischarged energy from the given discharge cycle becoming an initial condition for the next charging cycle"), would understand that Claim 9 describes partially—and not completely—discharging the storage element.

Based on the language in Claims 8 and 9, and the disclosures in the specification, a POSITA would understand that the term "the energy discharged during any given discharge cycle is not completely discharged" describes the energy that is stored during the charging cycle, *i.e.*, the energy that could potentially be discharged during any given discharge cycle, is only partially discharged, *i.e.*, is not completely discharged.

Therefore, for the reasons described above, the undersigned recommends that the term should be construed as plain-and-ordinary meaning, wherein the plain-and-ordinary meaning is "the energy that could potentially be discharged during any given discharge cycle is not completely discharged."

Finally, the undersigned does not believe that judicial correction is necessary as a POSITA would understand that the claim term means what the undersigned's recommended construction is. But, even if judicial correction were required, the undersigned concludes that the elements required for judicial correction are present. A district court can only correct an error in a claim if "(1) the correction is not subject to reasonable debate based on consideration of the claim language and the specification and (2) the prosecution history does not suggest a different interpretation of the claims." *Novo Indus., L.P. v. Micro Molds Corp.*, 350 F.3d 1348, 1357 (Fed. Cir. 2003).

With respect to the first element, as explained above, the claim language and the specification support the undersigned's recommended construction to be the correct judicial correction. Furthermore, Defendant does not appear to identify any alternative meaning and/or provide any arguments that indicate there is a reasonable debate regarding the correct judicial correction. With respect to the second element, Defendant does not cite to anything in the prosecution history that suggests a different interpretation. As such, to the extent that the Court concludes that judicial correction is needed, the undersigned recommends that the Court adopt the undersigned's recommended construction as the correction for this term.

C. Term #3: "differential" or "a second differential amplifier circuit that combines said down-converted quadrature-phase baseband signal portion with said down-converted differential quadrature-phase baseband signal portion and outputs a second channel down-converted differential quadrature-phase baseband signal"

Term	Plaintiff's Proposed Construction	Defendant's Proposed Construction
#3: "differential" or "a second differential amplifier circuit that combines said down-converted quadrature-phase baseband signal portion with said down-converted differential quadrature-phase baseband signal portion and outputs a second channel down-converted differential quadrature-phase baseband signal" U.S. Patent No. 9,118,528, Claim 19 Proposed by Defendant	Plain-and-ordinary meaning	Indefinite

The Parties' Positions:

Defendant contend that it "also seeks to adopt the claim construction record for certain terms—including proposed constructions, arguments, and evidence proffered by other defendants in earlier cases against [Plaintiff] involving the same Asserted Patents and related patents." Opening at 12. Rather than rebriefing the term, Defendant "adopts the arguments and evidence in the respective matters identified" from prior cases. *Id.* at 12–13 (citing cases).

In its response, Plaintiff contends that Claims 1 and 19 describe using two sets of circuitry: one for outputting in-phase baseband signals portions of the modulated carrier signal and another for outputting quadrature-phase baseband signals portions of the modulated carrier signal. Response at 11. Plaintiff contends that "the fourth energy storage element [in Claim 19[d]] was obviously intended to correspond to the second energy storage element [in Claim 1[d]], but with an 'inverted quadrature-phase' type portion instead of an 'inverted in-phase portion.' But an obvious typographical error substituted the word 'differential' for the word 'inverted[.]'" *Id.*

Plaintiff contends that "[t]he same typographical error (substituting 'differential' for 'inverted') persists with regard to the first and second differential amplifier circuit limitations." *Id.* More specifically, Plaintiff contends that "[t]he second differential amplifier circuit [in Claim 19[f]] was obviously intended to correspond to the first differential amplifier circuit [in Claim 1[f]], but with an 'inverted quadrature-phase' type portion instead of an 'inverted in-phase portion.'" *Id.* at 11–12.

Plaintiff also contends that the "proper interpretation" of Claim 19 corresponds to Figure 197.

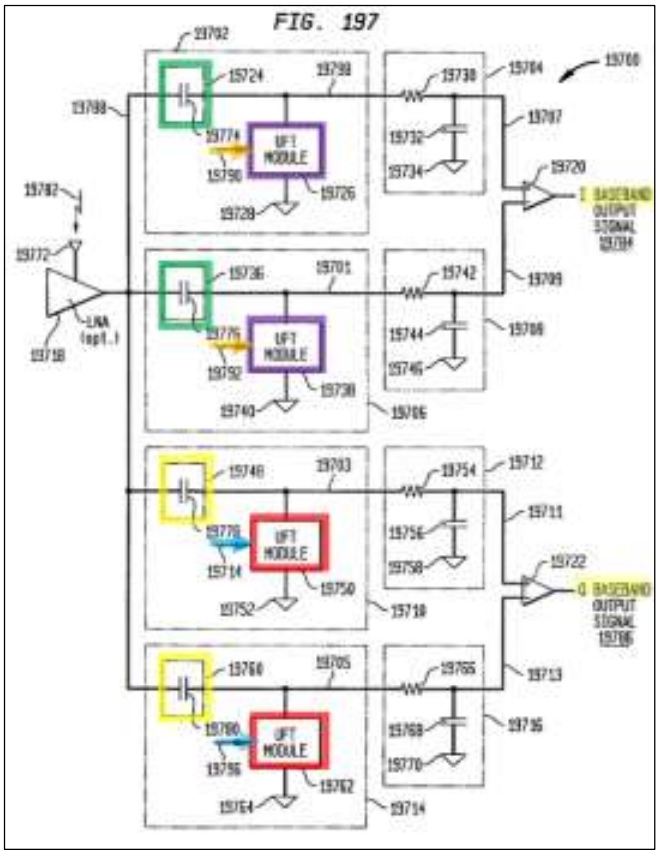

Id. at 12–13 (citing '528 Patent at Figure 197 (annotations in Plaintiff's brief)). More specifically, Plaintiff contends that Figure 197 depicts that the circuit outputs quadrature-phase ("Q") baseband signal 19786. *Id.* at 13. Plaintiff contends that the specification describes that "[a]s a result of the opening and closing of this switch, which respectively couples and de-couples fourth storage module 19760 to and from fourth voltage reference 19764, *a down-converted signal, referred to as* <u>*inverted*</u> *Q output signal 19705*, results." *Id.* (quoting '528 Patent at 179:6–10 (emphasis in Plaintiff's brief)). Plaintiff contends that the specification further describes that the "[s]econd differential amplifier 19722 receives filtered Q output signal 19711 at its non-inverting input and receives filtered <u>*inverted*</u> *Q output signal* 19713 at its inverting input." *Id.* (quoting '528 Patent at 179:34–36 (emphasis in Plaintiff's brief)).

Plaintiff contends that "[t]o the extent the Court deems it necessary to clarify the term, the Court has the authority to correct the term by replacing '*differential* quadrature-phase' with '*inverted* quadrature phase." *Id.* (citing *CBT Flint Partners, LLC v. Return Path, Inc.*, 654 F.3d 1353, 1358 (Fed. Cir. 2011)) (emphases in Plaintiff's brief). Plaintiff contends that "[t]his correction is not subject to reasonable debate; it is the only reasonable interpretation of the term in view of the surrounding claim language and the specification." *Id.*

In its reply, Defendant contends that although Plaintiff asserts the claim contains a judicially correctable error, Plaintiff also asserts that only some instances of the word "differential" need to be corrected. Reply at 7. Defendant contends that Plaintiff does not cite any evidence that a POSITA would know which instances of "'differential' require correction to 'inverted'." *Id.* at 7–8.

Defendant contends that the court in the Middle District of Florida concluded that Claim 19 of the '528 Patent was indefinite because the patentees used "differential" in "inconsistent and nonsensical" ways. *Id.* at 8. Defendant contends that this decision is "entitled to reasoned deference under *stare decisis*" and that Plaintiff does not provide a basis to depart from the Middle District of Florida's decision. *Id.* (citing *Blue Calypso, Inc. v. Groupon, Inc.*, 93 F. Supp. 3d 575, 583 (E.D. Tex. 2015)).

With respect to whether judicial correction is appropriate, Defendant contends that

> "Replacing some, but not all, 'differential' terms with 'inverted' is not a minor correction that is obvious and free from reasonable debate or evident from the prosecution history. Rather, the record supports that Plaintiff's proposed construction would alter one type of signal," differential, "for another type of signal, inverted."

Id. (quoting Opening, Ex. C at 28).

With respect to Plaintiff's argument that because Claim 1 uses "differential" in the same way as Claim 19, Defendant contends that this fact does not mean that Claim 19 can be corrected as just because this error appears in multiple claims. *Id.* at 9.

With respect to Plaintiff's arguments regarding Figure 197, Defendant contends that the portions of the specification that Plaintiff cites "say nothing about whether the word 'differential' can be swapped for 'inverted,' nor do they specify any instances in which that swap should be made." *Id.* Defendant contends that "differential" and "inverted" are words with different meanings such that "[c]hanging the word 'differential' to 'inverted' therefore alters the type of signal, and changes the scope of the claims." *Id.*

In its sur-reply, Plaintiff contends that Defendant "fails to analyze the term in the context of the full claim language and in view of the specification." Sur-Reply at 3. More specifically, Plaintiff contends that

> Claim 19 essentially doubles the subject matter of claim 1, from which it depends: where claim 1 discloses first and second switches, controls signals, and energy storage elements for outputting *in-phase* baseband signal portions of the modulated carrier signal, dependent claim 19 adds corresponding third and fourth switches, controls signals, and energy storage elements for outputting *quadrature-phase* baseband signal portions of the modulated carrier signal.

Id. at 4.

With respect to the claim language, Plaintiff contends that "the language of claim 19 aligns with the description of an I/Q modulation receiver as depicted in e.g., Figure 197 of the '528 patent." *Id.* Plaintiff contends that the specification "clearly explains that a second differential amplifier circuit receives and combines a quadrature-phase baseband signal with an inverted quadrature-phase baseband signal." *Id.* Plaintiff contends that Defendant "simply disregards the relevant portions of the intrinsic record." *Id.*

Plaintiff contends that Defendant does not provide any substantive response. *Id.* More specifically, Plaintiff contends that Defendant "simply reiterates the Court's findings in *ParkerVision, Inc. v. Apple, Inc.*, that this term is indefinite." *Id.*

Plaintiff contends that Defendant "does not argue that the term is subject to reasonable debate, nor identify another reasonable interpretation[,]" but rather that "the *only* reasonable interpretation of the term in view of the surrounding claim language and the specification" is to substitute "differential" for "inverted." *Id.* (emphasis in Plaintiff's brief).

The Undersigned's Analysis

After reviewing the parties' arguments and considering the applicable law, the undersigned concludes that the term is not indefinite, that judicial correction is not appropriate, and that the term should be construed according to its plain-and-ordinary meaning.

With respect to whether the term is indefinite, the undersigned concludes that Defendant has not provided clear-and-convincing evidence that the term is indefinite. Defendant's only argument that the term is indefinite is that Judge Davis in the Middle District of Florida found that the term is indefinite and that the principle of *stare decisis* should apply. Reply at 8.

As a preliminary matter, Judge Albright is not bound by Judge Davis's decision, nor does Defendant argue that he is.

With respect to Judge Davis's conclusion that the term is indefinite, the undersigned disagrees for at least the following reasons. ***First***, Judge Davis appeared to conclude that the claim term was only indefinite because the required judicial correction would replace "some, but not all, 'differential' terms with 'inverted' [which] is not a minor correction that is obvious and free from reasonable debate or evident from the prosecution history. Rather, the record supports that

Plaintiff's proposed construction would alter one type of signal for another type of signal." Opening, Ex. C at 28. Based on that, Judge Davis concluded that "[i]n light of Plaintiff's use of the term 'differential' in inconsistent and nonsensical ways, the Court finds that claims 10 and 19 are invalid for indefiniteness." *Id.*

But whether a term can be judicially corrected or not has no bearing on whether it is indefinite. The legal test for the former is whether "(1) the correction is not subject to reasonable debate based on consideration of the claim language and the specification and (2) the prosecution history does not suggest a different interpretation of the claims," while the legal test for the latter is whether the claim "viewed in light of the specification and prosecution history, inform those skilled in the art about the scope of the invention with reasonable certainty." *Novo Indus.*, 350 F.3d at 1357, *Nautilus*, 572 U.S. at 910. Given that the legal tests for judicial correction and indefiniteness are entirely unrelated, and do not appear to overlap in any way, it therefore follows that a court's conclusion that a term is not eligible for judicial correction does not concomitantly mean that the term is indefinite.

Second, apart from that argument, neither the Defendant in this case, or the defendants in the Middle District of Florida, appear to provide arguments as to ***why*** the term is indefinite. Reply at 8, Opening, Ex. C at 26–27. Defendant's failure to provide any argument why the term is indefinite indicate that Defendant has failed to carry its clear and convincing evidence burden.

Furthermore, after reviewing the term in question, the undersigned concludes that a POSITA would understand the scope of the term with "reasonable certainty." *Nautilus*, 572 U.S. at 910. More specifically, there does not appear to be any dispute as to the meaning of "differential," and the undersigned agrees that the meaning of "differential" is a well-understood

term. Because there is no dispute about the meaning of "differential," the undersigned concludes that a POSITA would understand the scope of the term with "reasonable certainty."

Therefore, for these reasons, the undersigned concludes that Defendant has not provided clear and convincing evidence that this term is indefinite.

With respect to the issue of judicial correction, the undersigned concludes that judicial correction is not appropriate in this case for at least the following reasons. ***First***, the undersigned is not persuaded that the term contains an obvious error. *Vifor (Int'l) AG v. Mylan Lab'ys Ltd.*, No. CV 19-13955 (FLW), 2021 WL 1608908, *3 (D.N.J. Apr. 26, 2021) ("if the Court determines that the Claim makes sense as written, then the error is not obvious and judicial correction is inappropriate.") (citing *Grp. One, Ltd. v. Hallmark Cards, Inc.*, 407 F.3d 1297, 1303 (Fed. Cir. 2005)). Here, it is unclear that there is an obvious error. For example, the alleged error ("differential" was inadvertently substituted for "inverted") is not an typographical error, *e.g.*, missing a word or a grammatical error, an error that was introduced during prosecution, or an error by the PTO, all of which may be more "obvious" than the alleged error. Furthermore, given that the alleged error occurs in Limitations [d], [e], and [f]—and not just one limitation—makes it less likely that the error is obvious. In other words, given that the alleged error occurs in multiple limitations, this indicates that it is less likely to be an error and more likely that the patentees intended to claim this particular configuration.

Second, although it is a close call, the undersigned concludes that replacing "differential quadrature-phase baseband signal" with "inverted quadrature-phase baseband signal" is subject to reasonable debate. In particular, because the two signals are completely different signals, the undersigned concludes that there is a reasonable debate which signal is the correct signal. Furthermore, the undersigned is mindful that judicially correcting could effectively limit Claim 19

to the embodiment depicted in Figure 195, which the undersigned is reluctant to do given that there does not appear to be "words or expression of manifest exclusion or restriction." *Pulse Elecs., Inc. v. U.D. Elec. Corp.*, 860 Fed. App'x 735, 737 (Fed. Cir. 2021) ("Embodiments in the specification—even if there is only one embodiment—cannot limit the scope of the claims absent the patentee's words or expression of manifest exclusion or restriction.") (quotation omitted).

Finally, given that it is questionable whether an error actually exists, the undersigned opts "construe the claim as written, not as the patentees wish they had written it" instead of judicially correcting the claim language. *Chef Am., Inc. v. Lamb-Weston, Inc.*, 358 F.3d 1371, 1374 (Fed. Cir. 2004); *see also Cent. Admixture Pharmacy Servs., Inc. v. Advanced Cardiac Sols., P.C.*, 482 F.3d 1347, 1355 (Fed. Cir. 2007) ("Claims mean precisely what they say.").

Construction: Because the "heavy presumption" is that terms should be construed according to their plain-and-ordinary meaning and because neither party allege lexicography or disclaimer, which are the only two exceptions to the general rule that a term should be construed as having its plain-and-ordinary meaning, the undersigned concludes that the term should be construed as having its plain-and-ordinary meaning. *Azure Networks*, 771 F.3d at 1347; *Thorner*, 669 F.3d at 1365.

Therefore, for the reasons described above, the undersigned recommends that the term is not indefinite, that judicial correction is not appropriate, and that the term should be construed according to its plain-and-ordinary meaning.

D. Term #4: "coupled"

Term	Plaintiff's Proposed Construction	Defendant's Proposed Construction
#4: "coupled" U.S. Patent No. 6,879,817, Claims 15, 21, 26; U.S. Patent No. 9,118,528, Claims 1, 17, 19, 35 Proposed by Defendant	Plain-and-ordinary meaning	Plain-and-ordinary meaning wherein "coupled" is "directly connected or connected through a wire (or a closed switch)"

Judge Albright previously construed this term as plain-and-ordinary meaning wherein the plain-and-ordinary meaning of "coupled" is "directly connected or connected through a wire (or a closed switch)," which is Defendant's proposed construction. *See, e.g.*, *ParkerVision, Inc. v. Realtek Semiconductor Corp.*, No. 6:22-cv-01162, ECF No. 93 at 29 (W.D. Tex. June 21, 2022).

<u>The Parties' Positions:</u>

Defendant contend that it "also seeks to adopt the claim construction record for certain terms—including proposed constructions, arguments, and evidence proffered by other defendants in earlier cases against [Plaintiff] involving the same Asserted Patents and related patents." Opening at 12. Rather than rebriefing the term, Defendant "adopts the arguments and evidence in the respective matters identified" from prior cases. *Id.* at 12–13 (citing cases).

In its response, Plaintiff contends that "[t]he Court's prior constructions would be improper here because they exclude express embodiments described in the '817 and '528 patent specifications." Response at 14. In particular, Plaintiff contends that the Court's prior construction—which limits the claim scope to direct connections between components—excludes

the embodiments depicted in Figure 48 of the ’817 Patent (left below) and Figure 70 of the ’528 Patent (right below).

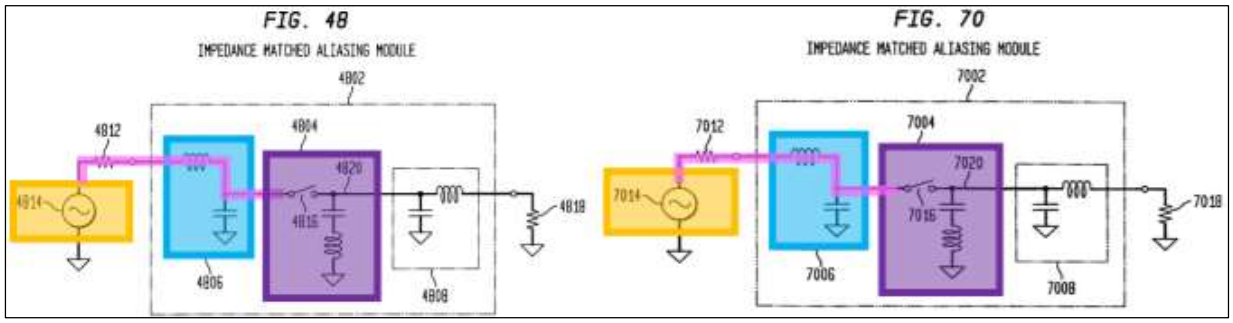

Id. (citing ’817 Patent at Figure 48 (annotations in Plaintiff’s brief); ’528 Patent at Figure 70 (annotations in Plaintiff’s brief)). More specifically, Plaintiff contends that both figures depict that a switch (purple boxes) is connected to a voltage source (orange boxes) through a conductive path (pink line). *Id.* at 14–15. Plaintiff contends that both specifications describe that the switch (purple boxes) is coupled to the voltage source (orange boxes) despite the presence of a match circuit (blue boxes) interposed between the voltage source and the switch along the conductive path (pink line). *Id.* at 15 (quoting ’817 Patent at 17:17–21 (“An impedance matching circuit can be utilized to efficiently ***couple*** an input EM signal that has a source impedance of, for example, 50 ohms, with the energy transfer module's impedance of, for example, 300 ohms.” (emphasis in Plaintiff’s brief)); citing ’528 Patent at 122:13–17 (same)).

In its reply, Defendant contends that “this Court has already twice construed ‘coupled’ in [Plaintiff’s] patents and twice concluded that the term requires a direct connection.” Reply at 10, 11. Defendant contends that Plaintiff “provides no basis for this Court to find any differently here.” *Id.* at 11. More specifically, Defendant contends that “the same claim term should be construed consistently across patents with shared inventors, shared assignee, shared disclosures, and shared claim language.” *Id.* (quoting *SightSound Techs., LLC v. Apple Inc.*, 809 F.3d 1307,

1316 (Fed. Cir. 2015)). Based on that, Defendant contends that the undersigned should reject Plaintiff's "attempt to improperly broaden 'coupled to include indirect connections.'" *Id.* at 10.

Defendant contends that Plaintiff "misleads this Court with false labels for Fig. 48 of the '817 patent and Fig. 70 of the '528 patent." *Id.* at 12. Defendant first contends that these figures were present in the '474 Patent that the Court previously considered. *Id.*

Defendant next contends that Plaintiff "misdraws the purple box" *Id.* More specifically, Defendant contends that "misidentifies element 4804 (purple label) as the 'energy transfer module,' but fails to acknowledge that element 4804 is never mentioned in the specification, let alone called an 'energy transfer module.'" *Id.* Defendant contends that "the specification clearly defines an 'energy transfer module' as being interchangeable with an 'aliasing module'" and that "the patent labels the entirety of Fig. 48 (not just element 4804) as an 'aliasing module.'" *Id.* (citing '817 Patent at 15:51–53, 5:14–16;'528 Patent at 7:40–42 (same regarding Figure 70)). Defendant contends that these passages uses the word "coupled" to describe that the energy transfer module and the input signal are directly connected together. *Id.* at 12–13. Based on that, Defendant contends that the undersigned should adopt the Court's prior construction which construed "coupled" to require a direct connection. *Id.* at 13.

In its sur-reply, Plaintiff contends that "nothing in the specification indicat[es] that the term 'coupled' has a special meaning or means different things depending on which circuit elements are being coupled." Sur-Reply at 5. Plaintiff contends that, in regards to Figure 48 of the '817 Patent and Figure 70 of the '528 Patent, "the '528 and '817 patents explain that the EM signal (orange) can be coupled to the energy transfer module (purple) through the matching circuit (blue)" and that "[t]here is no requirement that 'coupled' means direct coupling." *Id.* at 5–6.

With respect to Defendant's argument that Plaintiff incorrectly annotated the figures, Plaintiff contends that the specification describes that in one example, that impedance 4812 (which corresponds to the resistor outside of the dotted line box) is relatively low impedance of 50 Ohms while input impedance 4816 (which corresponds to the purple box) is approximately 300 Ohms. *Id.* (citing '817 Patent at 17:25–29). Plaintiff further contends that the specification describes that the "intervening matching circuit (blue) 'can be utilized to efficiently couple an input EM signal [orange box] that has a source impedance of, for example, 50 ohms, with the energy transfer module's [purple box] impedance of, for example, 300 ohms.'" *Id.* (quoting '817 Patent at 17:17–21 (modifications in Plaintiff's brief)). Based on that, Plaintiff contends that it correctly annotated the figures and that these figures "illustrate an embodiment where coupling can occur through an intermediate circuit component other than a switch." *Id.*

<u>The Undersigned's Analysis</u>

After reviewing the parties' arguments and considering the applicable law, the undersigned concludes that the proper construction is plain-and-ordinary meaning wherein "coupled" includes both direct and indirect connections. ***First***, with respect to the first part of the construction, the "heavy presumption" is that terms should be construed according to their plain-and-ordinary meaning. *Azure Networks*, 771 F.3d at 1347.

Second, neither party alleges lexicography or disclaimer, which are the only two exceptions to the general rule that a term should be construed as having its plain-and-ordinary meaning. *Thorner*, 669 F.3d at 1365.

Third, with respect to the issue of whether "coupled" includes indirect connections, the undersigned concludes that it does. With respect to Figure 48 of the '817 Patent, the specification

describes that "[a]n impedance matching circuit can be utilized to efficiently ***couple*** an input EM signal that has a source impedance of, for example, 50 ohms, with the energy transfer module's impedance of, for example, 300 ohms." '817 Patent at 17:17–21 (emphasis added). The specification uses Figure 48 to illustrate this statement. *Id.* at 17:21–25 ("Matching these impedances can be accomplished in various manners, including providing the necessary impedance directly or the use of an impedance match circuit as described below. Referring to FIG. 48…"). The specification then describes that impedance 4812, which is the source impedance of the RF signal, has an impedance of 50 Ohms and that input impedance 4816, which is the input impedance of energy transfer module 4806, has an impedance of 300 Ohms. *Id.* at 7:25–29. The specification describes that input impedance match module 4806, which is an impedance matching circuit, can be inserted between impedance 4812 and input impedance 4816. *Id.* at 7:29–31. Based on these disclosures, the undersigned concludes that a POSITA would understand "coupling" the source impedance of an input EM signal (*i.e.*, the RF signal in Figure 48) with the energy transfer module's impedance (*i.e.*, input impedance 4816, which is the input impedance of energy transfer module 4806, in Figure 48) includes indirect connections because of the presence of impedance matching circuit (*i.e.*, input impedance match module 4806 in Figure 48).

The specification of the '528 Patent makes the same disclosures. '528 Patent at 122:13–27.

Finally, while the undersigned's recommended construction deviates from the Court's prior construction, the reason for this is because Plaintiff did not appear to raise the arguments corresponding to Figures 48 and 70 in prior cases. But given that it is clear that the specifications disclose that "coupled" includes indirect connections, the undersigned believes that the intrinsic evidence supports broadening the Court's prior construction to include indirect connections.

Phillips, 415 F.3d at 1316 (Fed. Cir. 2005) ("[T]he specification 'is always highly relevant to the claim construction analysis. Usually, it is dispositive; it is the single best guide to the meaning of a disputed term.'") (quoting *Vitronics*, 90 F.3d at 1582).

Therefore, for the reasons described above, the undersigned recommends that the term should be construed as plain-and-ordinary meaning wherein "coupled" includes both direct and indirect connections.

E. Term #5: "sampling aperture"

Term	Plaintiff's Proposed Construction	Defendant's Proposed Construction
#5: "sampling aperture" U.S. Patent No. 9,118,528, Claims 1, 18, 19, 36 Proposed by Both Sides	"a period of time during which the switch is in its closed (i.e., on) state"	"a period of time during which the switch is in its closed (i.e., on) state as part of the process of reducing a continuous-time signal to a discrete-time signal"

Judge Albright, the undersigned, and Judge Gilliland all previously construed this term as "a period of time during which the switch is in its closed (i.e., on) state" which is Plaintiff's proposed construction. *HiSense*, No. 6:20-cv-00870, ECF No. 51 at 106; *LG Elecs.*, No. 6:21-cv-00520, ECF No. 55 at 35; *Realtek*, No. 6:22-cv-01162, ECF No. 93 at 33.

<u>The Parties' Positions:</u>

Defendant contends that it "also seeks to adopt the claim construction record for certain terms—including proposed constructions, arguments, and evidence proffered by other defendants in earlier cases against [Plaintiff] involving the same Asserted Patents and related patents." Opening at 12. Rather that rebriefing the term, Defendant "adopts the arguments and evidence in the respective matters identified" from prior cases. *Id.* at 12–13 (citing cases).

In its response, Plaintiff contends that this Court has construed this term in multiple prior cases and "consistently maintained the same construction that [Plaintiff] proposes here." Response at 15 (citing *Intel*, No. 6:20-cv-00108, ECF No. 75 at 7; *HiSense*, No. 6:20-cv-00870, ECF No. 51 at 85–87; *LG*, No. 6:21-cv-00520, ECF No. 55 at 36).

Plaintiff contends that a "sampling aperture" is simply "the duration of time when the switch is closed," which is reflected in Plaintiff's proposed construction. *Id.* (citing *HiSense*, No. 6:20-cv-00870, ECF No. 51 at 86). Plaintiff contends that Defendant's proposed construction is "purposefully vague and improperly narrows the scope of the term." *Id.* (citing *HiSense*, No. 6:20-cv-00870, ECF No. 51 at 86–87).

Plaintiff contends that Defendant "does not explain why the Court got it wrong[,]" but "merely proposes the same construction and incorporates by reference the same arguments that the Court already rejected in prior litigations." *Id.* at 16.

In its reply, Defendant contends that Plaintiff "cannot dispute that the term, by its plain language, relates to 'sampling,' *i.e.*, 'reducing a continuous-time signal to a discrete-time signal.'" Reply at 13. Defendant contends that "[t]o read the term 'sampling aperture' without requiring sampling improperly reads out half the term." *Id.*

Defendant contends that Plaintiff does not identify any vagueness or ambiguity in Defendant's proposed construction. *Id.* at 14. Defendant contends that its proposed construction "reflects the plain meaning of both 'sampling' and 'aperture'—an 'aperture' is a period of time during which the switch is in its closed (i.e., on) state, and 'sampling' is the process of 'reducing a continuous-time signal to a discrete-time signal.'" *Id.* (citing '528 Patent at 39:55–40:6).

In its sur-reply, Plaintiff contends that Defendant's proposed construction is "not merely a combination of the plain meaning of the terms 'sampling' and 'aperture.'" Sur-Reply at 7. Rather,

Plaintiff contends that Defendant's proposed construction "is purposefully vague, begging the question, what is 'part of the process' and what are the other 'parts' of the process." *Id.* at 8.

Plaintiff contends that "[i]t is the occurrence of a sampling aperture that causes the switch to reduce a continuous-time signal to a discrete-time signal." *Id.*

The Undersigned's Analysis

After reviewing the parties' arguments and considering the applicable law, the undersigned agrees with Plaintiff that the construction of this term should be "a period of time during which the switch is in its closed (i.e., on) state." The parties, via their respective proposed constructions, agree that a "sampling aperture" is "a period of time during which the switch is in its closed (i.e., on) state." The undersigned agrees.

The parties differ only on whether "as part of the process of reducing a continuous-time signal to a discrete-time signal" should be included in the construction. The undersigned agrees with Plaintiff that this phrase should not be included in the construction for at least the following reasons. ***First***, a "sampling aperture" is simply the period of time that a switch is closed, *i.e.* on, nothing more. The sampling aperture may be used to control a switch that is in a circuit where samples are taken from a continuous-time signal to produce a discrete-time signal, or it may not be. In other words, the switch is not the electrical component that reduces a continuous-time signal to a discrete-time signal, rather it is the entire circuit that does so. As such, because a switch that is controlled by a sampling aperture may be used in a circuit to reduce a continuous-time signal to a discrete-time signal, or it may be used in another circuit that performs a different function, including "as part of the process of reducing a continuous-time signal to a discrete-time signal" in

the construction improperly limits the claim scope to the former type of circuit. Defendant has not identified any lexicography or disclaimer that would limit the claim term in that manner.

Second, in the context of the claims, limiting "sampling aperture" to include "as part of the process of reducing a continuous-time signal to a discrete-time signal" could potentially render some claim language to be superfluous.

Third, the undersigned agrees with Plaintiff that "as part of the process" is vague, which will make it difficult for a jury to apply. *Sulzer*, 358 F.3d at 1366 ("The district court simply must give the jury guidance that can be understood and given effect by the jury once it resolves the issues of fact which are in dispute.").

Therefore, for the reasons described above, the undersigned recommends that "sampling aperture" should be construed as "a period of time during which the switch is in its closed (i.e., on) state."

IV. CONCLUSION

In conclusion, for the reasons described herein, the undersigned recommends adopting the below constructions as the Court's constructions.

SIGNED this 21st day of October, 2024.

JOSHUA J. YI, Ph.D.

Term	Plaintiff's Proposed Construction	Defendant's Proposed Construction	Special Master's Recommended Construction
#1: "storage element" / "energy storage element" U.S. Patent No. 6,879,817, Claims 15, 21, 22, 26, 27; U.S. Patent No. 9,118,528, Claims 1, 8, 9, 18, 19, 26, 27, 36 Proposed by Both Sides	"an element of an energy transfer system that stores non-negligible amounts of energy from an input electromagnetic signal"	"an element of a system that stores non-negligible amounts of energy from an input electromagnetic signal"	"an element of a system that stores non-negligible amounts of energy from an input electromagnetic signal."

Term	Plaintiff's Proposed Construction	Defendant's Proposed Construction	Special Master's Recommended Construction
#2: "the energy discharged during any given discharge cycle is not completely discharged" U.S. Patent No. 9,118,528, Claims 9, 27 Proposed by Plaintiff	Plain-and-ordinary meaning wherein the plain-and-ordinary meaning is "the energy that could potentially be discharged during any given discharge cycle is not completely discharged"	Plain-and-ordinary meaning	Plain-and-ordinary meaning wherein the plain-and-ordinary meaning is "the energy that could potentially be discharged during any given discharge cycle is not completely discharged"
#3: "differential" or "a second differential amplifier circuit that combines said down-converted quadrature-phase baseband signal portion with said down-converted differential quadrature-phase baseband signal portion and outputs a second channel down-converted differential quadrature-phase baseband signal" U.S. Patent No. 9,118,528, Claim 19 Proposed by Defendant	Plain-and-ordinary meaning	Indefinite	Not indefinite. Judicial correction is not appropriate. Plain-and-ordinary meaning.

Term	Plaintiff's Proposed Construction	Defendant's Proposed Construction	Special Master's Recommended Construction
#4: "coupled" U.S. Patent No. 6,879,817, Claims 15, 21, 26; U.S. Patent No. 9,118,528, Claims 1, 17, 19, 35 Proposed by Defendant	Plain-and-ordinary meaning	Plain-and-ordinary meaning wherein "coupled" is "directly connected or connected through a wire (or a closed switch)"	Plain-and-ordinary meaning wherein "coupled" includes both direct and indirect connections.
#5: "sampling aperture" U.S. Patent No. 9,118,528, Claims 1, 18, 19, 36 Proposed by Both Sides	"a period of time during which the switch is in its closed (i.e., on) state"	"a period of time during which the switch is in its closed (i.e., on) state as part of the process of reducing a continuous-time signal to a discrete-time signal"	"a period of time during which the switch is in its closed (i.e., on) state"