IN THE UNITED STATES DISTRICT COURT
FOR THE WESTERN DISTRICT OF TEXAS
WACO DIVISION

PARKERVISION, INC., *Plaintiff*	§	
	§	**6:23-CV-00384-ADA**
-v-	§	
TEXAS INSTRUMENTS INCORPORATED, *Defendant*	§	

SPECIAL MASTER'S REPORT AND RECOMMENDATION REGARDING CLAIM CONSTRUCTION

Before the Court are the Parties' claim construction briefs: Defendant Texas Instruments Incorporated's Opening and Reply briefs (ECF Nos. 43 and 48, respectively) and Plaintiff ParkerVision Inc.'s Response and Sur-Reply briefs (ECF Nos. 46 and 49, respectively). United States District Judge Alan D Albright referred these cases to the undersigned on February 5, 2024. ECF No. 42. The undersigned provided preliminary constructions for the disputed terms one day before the hearing. The undersigned held the *Markman* hearing on June 14, 2024. During that hearing, the undersigned informed the Parties of the recommended constructions for most of the disputed terms. *Id.* This Report and Recommendation does not alter any of those constructions.

I. DESCRIPTION OF THE ASSERTED PATENTS

Plaintiff asserts U.S. Patent Nos. 7,496,342, 8,65,177, and 9,118,528. The Asserted Patents are directed towards down-conversion of radio-frequency (RF) signals. Opening at 3, Response at 1.

ParkerVision Exhibit 2052
TI and NXP v. ParkerVision - IPR2024-00936

The undersigned previously construed terms from U.S. Patent No. 6,266,518, which appears to be related to the Asserted Patents and is also directed towards down-conversion. The undersigned incorporates the Description of the Asserted Patents from that order, which is reproduced below.[1]

The Asserted Patents describe and claim systems for down-conversion of a modulated carrier signal. '518 Patent at Abstract. Down-conversion is the process of recovering the baseband (audio) signal from the carrier signal after it has been transmitted to and received by the receiver. This process is referred to as "down-conversion" because a high frequency signal is being down-converted to a low frequency signal.

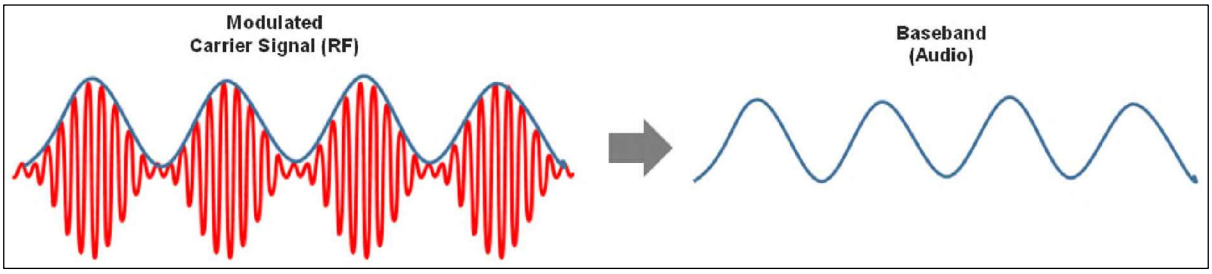

The Asserted Patents disclose at least two types of systems for down-conversion: (1) sample-and-hold (*i.e.*, voltage sampling) and (2) "energy transfer" (also known as "energy sampling"). The key difference between the two is that the former takes a small "sample" of the input signal while the latter takes a very large sample, *i.e.*, a large enough sample that a non-negligible amount of energy is transferred from the input signal. The following sub-sections describe each type of system, their respective operation, and compares them.

[1] It is worth noting that Plaintiff appears to agree that the description of the Asserted Patents is very similar to the asserted patents in prior case. Response at 1 n.1. As such, Plaintiff did not "repeat its discussion of the technology[.]" *Id.*

A. Circuit configuration of down-sampling systems: sample-and-hold and energy transfer.

Figure 78B depicts an exemplary sample-and-hold system while Figure 82B depicts an exemplary energy transfer system. ’518 Patent at 63:19–26 (sample-and-hold) and 7:63–64 (energy transfer).

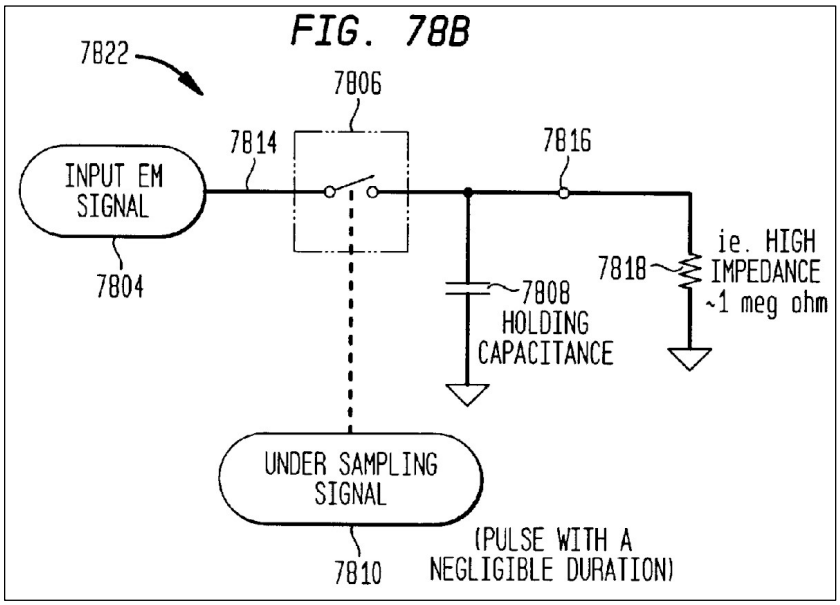

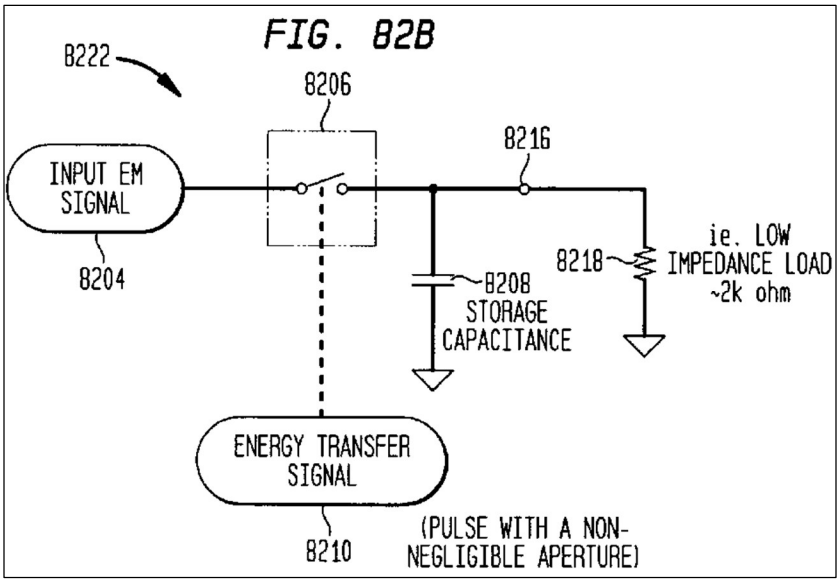

While Figures 78B and 82B depict that the respective circuits have a similar structure, their respective parameter values (*e.g.*, capacitor and load impedance values)—and concomitantly their

respective operation—are very different. It is important to note that the input signal, input EM signal, is the same in both figures.

The circuits in both figures include a switching module (7806 in Figure 78B and 8206 in Figure 82B). *Id.* at 62:65–66 (switching module 7806), 66:13–14 (switching module 8206). The switching module opens and closes (*i.e.*, turns off and on, respectively) based on under-sampling signal 7810 in Figure 78B and energy transfer signal 8210 in Figure 82B. *Id.* at 62:67–63:1 (under-sampling signal 7810), 66:24–26 (energy transfer signal 8210). When the switching module is "closed," input EM signal 7804 and input EM signal 8204 can propagate across the switching module to holding capacitance 7808 and storage capacitance 8208, respectively, but when the switching module is "open," input EM signals 7804/8204 cannot propagate across the switching module. While both switching module 7806 and switching module 8206 open and close, the duration that each module is closed differs significantly. The specifications of the Asserted Patents describe that under-sampling signal 7810 "includes a train of pulses having negligible apertures that tend towards zero time in duration." *Id.* at 63:1–3. The specification discloses an embodiment of the "negligible pulse width" as being "in the range of 1–10 p[ico]sec[onds] ("ps") for under-sampling a 900 MHz signal." *Id.* at 63:3–5. By contrast, the specifications describe that energy transfer signal 8210 "includes a train of energy transfer pulses having <u>non-negligible</u> pulse widths that tend away from zero time in duration." *Id.* at 66:26–28 (emphasis added). The specification discloses an embodiment where the "non-negligible pulse" is approximately 550 ps for a 900 MHz signal.

The specifications describe that holding capacitance 7808 and storage capacitance 8208 are capacitors that charge when switching module 7804 and switching module 8204, respectively, are closed. *Id.* at 63:10–13 (holding capacitance 7808), 66:38–42 (storage capacitance 8208). The

specifications also disclose that holding capacitance 7808 "preferably has a small capacitance value" and disclose an embodiment wherein holding capacitance 7808 has a value of 1 picoFarad ("pF"). *Id.* at 63:9–15. By contrast, the specifications disclose that storage capacitance 8208 "preferably has the capacity to handle the power being transferred" and disclose an embodiment wherein storage capacitance 8208 has a value "in the range of 18 pF." *Id.* at 66:38–49.

The specifications describe that holding capacitance 7808 and storage capacitance 8208 discharge through load 7812 and load 8212 when switching module 7804 and switching module 8204, respectively, are open. *See id.* at 63:19–26 (load 7812), 66:61–65 (load 8212). Figure 78B depicts that "high impedance" load 7818 has an impedance of approximately 1 MΩ while Figure 82B depicts that "low impedance" load 8218 has an impedance of approximately 2 kΩ. The specifications describe that "[a] high impedance load is one that is relatively insignificant to an output drive impedance of the system for a given output frequency. A low impedance load is one that is relatively significant." *Id.* at 66:58–61.

B. Operation of down-converting systems

At a very high level, both systems operate similarly. In particular, when the switching module (switching modules 7806 / 8206) is closed, the input signal (input EM signal 7804 / 8204) propagates to the capacitor (holding capacitance 7808 and storage capacitance 8208) and charge the voltage across the capacitor to the voltage of input signal. But when the switching module is open, the input signal cannot propagate to the capacitor, *i.e.*, cannot charge the voltage across the capacitor to the voltage of the input signal. Rather, the charge on the capacitor discharges through the load impedance (load 7818 / 8218).

While both systems operate similarly at a high level, differences in (1) the width of the sampling aperture, (2) value of the capacitor, and (3) value of the load are what dictates whether the system operates as a sample-and-hold system or an energy transfer system.

1. Operation of sample-and-hold system

In a sample-and-hold system, the sampling aperture in under-sampling signal 7810 is negligible, which means only a small amount of charge from input EM signal 7804 propagates to the holding capacitance 7808 before switching module 7806 opens. *Id.* at 62:63–63:8. Because the sampling aperture has a negligible (*i.e.*, very small) width, there is only enough time to take a "sample" of input EM signal 7804, *i.e.*, only a small amount of charge is transferred to holding capacitor 7808. Given that only a small amount of charge is transferred to the capacitor, the value of holding capacitor 7808 needs to be relatively low in order for the voltage across holding capacitance 7808 to change to the voltage of input EM signal 7804. More specifically, the relationship between charge (Q) and voltage (V) across a capacitor (with a capacitance of C) is $Q = C * V$, or $Q / C = V$. As such, if the capacitance C is large, more charge Q is needed in order to increase the voltage to V. For example, for the same amount of charge, if the capacitance is 2C in one case and C in other case, the voltage in the former case will be half the voltage of the voltage in the latter case. *Id.* at 65:29–35. Therefore, to ensure that the value of holding capacitance 7808 does not limit the voltage across the capacitor, the value of holding capacitance 7808 needs to be, as described above, low. *Id.* at 63:9–15.

When sampling module 7806 is open, the charge on holding capacitance 7808 discharges through load impedance 7818. *See id.* at 63:19–26. When the value of load impedance 7818 is high, the charge on holding capacitance 7808 discharges very slowly as compared to when the load impedance is low. More specifically, the time to discharge a capacitor is related to $R * C$

(also known as the time constant τ) where R is the value of the load impedance. Using the exemplary values depicted in Figures 78B (1 MΩ) and 82B (2 kΩ), assuming that the capacitance is the same, it will take 500 times longer to discharge the capacitor with the 1 MΩ load impedance as compared to the circuit with the 2 kΩ load impedance. Because it takes significantly longer to discharge the capacitor using a 1 MΩ load impedance (as compared to the 2 kΩ load impedance), the 1 MΩ load impedance "holds" the charge.

To summarize, in a sample-and-hold down-sampling system, a negligible sampling aperture for switching module 7806 and a small value for holding capacitance 7808 only allows for a "sample" of the voltage of the input EM signal 7804 when switching module 7806 is closed. And because of the high value of load impedance 7818, the capacitor "holds" that value when switching module 7806 is open.

2. Operation of energy transfer system

As described above, in an energy transfer system, the sampling aperture is non-negligible (*e.g.*, 550 ps versus 1 ps for the sample-and-hold system for a 900 MHz input signal). Therefore, there is significantly more time to transfer charge from the input signal to storage capacitance 8208. *Id.* at 66:42–44. Because significantly more charge is transferred to the capacitor, the value of storage capacitance 8208 can be larger, in spite of the fact that charge and voltage are inversely related (*i.e.*, $V = {}^{Q}/_{C}$). The fact that this system transfers a large amount of charge—or energy—to the capacitor gives rise to the name "energy transfer" system.

When sampling module 8206 is open, the charge on storage capacitance 8208 discharges through load impedance 8218. *See id.* at 66:61–65. Because the load impedance in an energy transfer system is "low," *e.g.*, 2 kΩ, the charge on storage capacitance 8208 discharges much faster

than the charge on a capacitor in a sample-and-hold system, *e.g.*, 500 times faster as compared to using a 1 MΩ load impedance.

To summarize, in an energy transfer down-sampling system, a non-negligible sampling aperture for switching module 8206 and a high value for storage capacitance 8208 allows for a large amount of charge—or energy—to be transferred from the input signal.

C. Comparison of sample-and-hold and energy transfer systems

The following table summarizes key differences between sample-and-hold and energy transfer systems.

Parameter	Sample-and-hold	Energy transfer
Sampling aperture	Negligible (*e.g.*, 1–10 ps)	Non-negligible (*e.g.*, 550 ps)
Capacitor	Holding capacitance (*e.g.*, 1 pF)	Storage capacitance (*e.g.*, 18 pF)
Load impedance	High (*e.g.*, ~1 MΩ)	Low (*e.g.*, ~2 kΩ)

It is important to emphasize that differences in the set of parameter values determines whether a system functions as a sample-and-hold system or an energy transfer system. For example, there is nothing special in the structure of a holding capacitance as compared to the structure of a storage capacitance. A circuit designer could, in theory, swap the holding capacitance in a sample-and-hold system with the storage capacitance in an energy transfer system and still have a sample-and-hold system by appropriately adjusting the sampling aperture and load impedance to "match" the larger capacitor value of the holding capacitance.

It is important to note that changing one parameter without adjusting the other parameters will prevent each system from operating as intended or will have other problems. For example, using a non-negligible sampling aperture in a sample-and-hold system is unnecessary as the holding capacitance can be fully charged (to the voltage of the input signal) with a negligible

aperture, but using a non-negligible sampling aperture may distort or destroy the input EM signal by transferring too much of its energy to the holding capacitance. *Id.* at 62:30–39.

Even worse, using a high load impedance in an energy transfer system or a low load impedance in a sample-and-hold system could result in a system with poor performance. *See, e.g.*, *id.* at 65:52–55. More specifically, in the latter situation, the low value of the holding capacitance combined with a low load impedance means that its corresponding time constant τ is very low, which means that the holding capacitance may discharge significantly when the switching module is open. As a result, the down-converted signal "cannot provide optimal voltage reproduction, and has relatively negligible power available at the output." *Id.* at 64:49–51.

In the former situation, the high value of the storage capacitance combined with a high load impedance means that its corresponding time constant τ is very high; therefore, it will take considerably more time (as compared to a low load impedance) to discharge the storage capacitance. This may result in less than optimal voltage reproduction, *e.g.*, when the voltage of the input EM signal is lower than the voltage across the capacitor. Furthermore, the down-converted signal could have substantially less power (*e.g.*: V^2/R; ~2 mV and 1 MΩ) than the energy transfer system with a low impedance load (*e.g.*: V^2/R; ~2 mV and 2 kΩ) or even the sample-and-hold system with a high impedance load (*e.g.*: V^2/R; ~5 mV and 1 MΩ). *See id.* at 67:28–33.

II. LEGAL STANDARD

A. General principles

The general rule is that claim terms are generally given their plain-and-ordinary meaning. *Phillips v. AWH Corp.*, 415 F.3d 1303, 1312 (Fed. Cir. 2005) (*en banc*); *Azure Networks, LLC v.*

CSR PLC, 771 F.3d 1336, 1347 (Fed. Cir. 2014), *vacated on other grounds*, 575 U.S. 959, 959 (2015) ("There is a heavy presumption that claim terms carry their accustomed meaning in the relevant community at the relevant time.") (internal quotation omitted). The plain-and-ordinary meaning of a term is the "meaning that the term would have to a person of ordinary skill in the art in question at the time of the invention." *Phillips*, 415 F.3d at 1313.

The "only two exceptions to [the] general rule" that claim terms are construed according to their plain-and-ordinary meaning are when the patentee (1) acts as his/her own lexicographer or (2) disavows the full scope of the claim term either in the specification or during prosecution. *Thorner v. Sony Computer Ent. Am. LLC*, 669 F.3d 1362, 1365 (Fed. Cir. 2012). The Federal Circuit has counseled that "[t]he standards for finding lexicography and disavowal are exacting." *Hill-Rom Servs., Inc. v. Stryker Corp.*, 755 F.3d 1367, 1371 (Fed. Cir. 2014). To act as his/her own lexicographer, the patentee must "clearly set forth a definition of the disputed claim term" and "'clearly express an intent' to [define] the term." *Thorner,* 669 F.3d at 1365.

"Like the specification, the prosecution history provides evidence of how the PTO and the inventor understood the patent." *Phillips*, 415 F.3d at 1317. "[D]istinguishing the claimed invention over the prior art, an applicant is indicating what a claim does not cover." *Spectrum Int'l, Inc. v. Sterilite Corp.*, 164 F.3d 1372, 1379 (Fed. Cir. 1998). The doctrine of prosecution disclaimer precludes a patentee from recapturing a specific meaning that was previously disclaimed during prosecution. *Omega Eng'g, Inc. v. Raytek Corp.*, 334 F.3d 1314, 1323 (Fed. Cir. 2003). "[F]or prosecution disclaimer to attach, our precedent requires that the alleged disavowing actions or statements made during prosecution be both clear and unmistakable." *Id.* at 1325–26. Accordingly, when "an applicant's statements are amenable to multiple reasonable

interpretations, they cannot be deemed clear and unmistakable." *3M Innovative Props. Co. v. Tredegar Corp.*, 725 F.3d 1315, 1326 (Fed. Cir. 2013).

A construction of "plain and ordinary meaning" may be inadequate when a term has more than one "ordinary" meaning or when reliance on a term's "ordinary" meaning does not resolve the parties' dispute. *O2 Micro Int'l Ltd. v. Beyond Innovation Tech. Co*., 521 F.3d 1351, 1361 (Fed. Cir. 2008). In that case, the Court must describe what the plain-and-ordinary meaning is. *Id.*

"Although the specification may aid the court in interpreting the meaning of disputed claim language . . ., particular embodiments and examples appearing in the specification will not generally be read into the claims." *Constant v. Advanced Micro-Devices, Inc.*, 848 F.2d 1560, 1571 (Fed. Cir. 1988). "[I]t is improper to read limitations from a preferred embodiment described in the specification—even if it is the only embodiment—into the claims absent a clear indication in the intrinsic record that the patentee intended the claims to be so limited." *Liebel-Flarsheim Co. v. Medrad, Inc.*, 358 F.3d 898, 913 (Fed. Cir. 2004).

Although extrinsic evidence can be useful, it is "less significant than the intrinsic record in determining 'the legally operative meaning of claim language.'" *Phillips*, 415 F.3d at 1317 (quoting *C.R. Bard, Inc. v. U.S. Surgical Corp.*, 388 F.3d 858, 862 (Fed. Cir. 2004)). Technical dictionaries may be helpful, but they may also provide definitions that are too broad or not indicative of how the term is used in the patent. *Id.* at 1318. Expert testimony may also be helpful, but an expert's conclusory or unsupported assertions as to the meaning of a term are not. *Id.*

B. Claim differentiation

Under the doctrine of claim differentiation, a court presumes that each claim in a patent has a different scope. *Phillips*, 415 F.3d at 1314–15. The presumption is rebutted when, for

example, the "construction of an independent claim leads to a clear conclusion inconsistent with a dependent claim." *Id.* The presumption is also rebutted when there is a "contrary construction dictated by the written description or prosecution history." *Seachange Int'l., Inc. v. C-COR, Inc.*, 413 F.3d 1361, 1369 (Fed. Cir. 2005). The presumption does not apply if it serves to broaden the claims beyond their meaning in light of the specification. *Intellectual Ventures I LLC v. Motorola Mobility LLC*, 870 F.3d 1320, 1326 (Fed. Cir. 2017).

C. Indefiniteness

"[I]ndefiniteness is a question of law and in effect part of claim construction." *ePlus, Inc. v. Lawson Software, Inc.*, 700 F.3d 509, 517 (Fed. Cir. 2012). Patent claims must particularly point out and distinctly claim the subject matter regarded as the invention. 35 U.S.C. § 112, ¶ 2. A claim, when viewed in light of the intrinsic evidence, must "inform those skilled in the art about the scope of the invention with reasonable certainty." *Nautilus Inc. v. Biosig Instruments, Inc.*, 572 U.S. 898, 910 (2014). If it does not, the claim fails § 112, ¶ 2 and is therefore invalid as indefinite. *Id.* at 901. Whether a claim is indefinite is determined from the perspective of one of ordinary skill in the art as of the time the application was filed. *Id.* at 911.

In the context of a claim governed by § 112, ¶ 6, the claim is indefinite if the claim fails to disclose adequate corresponding structure to perform the claimed functions. *Williamson*, 792 F.3d at 1351–52. The disclosure is inadequate when one of ordinary skill in the art "would be unable to recognize the structure in the specification and associate it with the corresponding function in the claim." *Id.* at 1352. Computer-implemented means-plus-function claims are indefinite unless the specification discloses an algorithm to perform the function associated with the limitation. *Noah Sys., Inc. v. Intuit Inc.*, 675 F.3d 1302, 1319 (Fed. Cir. 2012).

III. LEGAL ANALYSIS

A. Term #1: "controlling a charging and discharging cycle"

Term	Plaintiff's Proposed Construction	Defendant's Proposed Construction
#1: "controlling a charging and discharging cycle" U.S. Patent No. 7,496,342, Claim 18 Proposed by Defendant	Plain-and-ordinary meaning	"controlling a cycle of charging and then discharging each capacitor"

<u>The Parties' Positions:</u>

Defendant contends that the specification "repeatedly describes the 'charging' and 'discharging' portions of the cycle recited in method claim 18 as separate and distinct events, with 'charging' occurring when a switch is closed and 'discharging' occurring when the switch is opened." Opening at 7. Defendant contends that the specification never describes that charging and discharging simultaneously. *Id.* By way of example, Defendant contends that the specification "distinguishes between (1) when the switching device is closed so that a 'charging cycle' "causes a charge to be stored on capacitor 1604 … and (2) '[d]uring a period of time' that the switching device is open, 'a percentage of the total charge stored on capacitor 1604 is discharged.'" *Id.* at 8 (citing '342 Patent at 49:67–50:11, 50:12–15).

As another example, Defendant contends that the specification describes that "FIG. 60 illustrates an example charge/discharge timing diagram for the capacitor C_S, where the capacitor C_S ***charges during*** the apertures A, and ***discharges between*** the apertures A." *Id.* at 9 (quoting '342 Patent at 42:58–61 (emphases in Defendant's brief)).

In its response, Plaintiff contends that "[t]he language of the term is straightforward" and "[t]here are no words that are unclear (nor does [Defendant] allege there are), and thus the term

does not require construction." Response at 2. Plaintiff contends that the addition of "then" in Defendant's proposed construction is improper as it "changes the meaning of the term[.]" and *excludes* embodiments described in the specification." *Id.* (emphasis in Plaintiff's brief).

Plaintiff contends that the term does not contain any temporal ordering. *Id.* Plaintiff contends that Figure 16H is consistent with the specification and depicts a "first aliasing module 1632 (blue box) includes a first switching device 1608 (blue circle) electrically coupled to a first capacitor 1604 (green box); the second aliasing module 1634 (purple box) includes a second switching device 1610 (purple circle) electrically coupled to a second capacitor 1606 (yellow box)." *Id.* (citing'342 Patent at 18:13–15, 18:34–20:336, 3–39, 21:27–31).

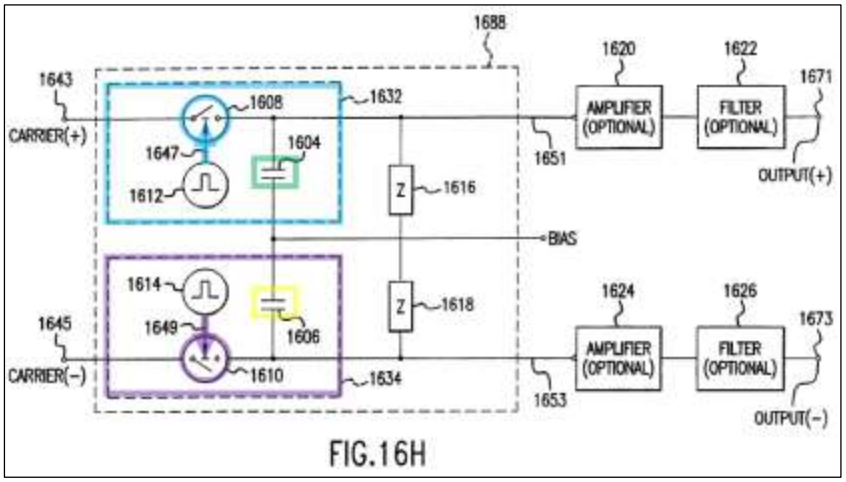

FIG.16H

'342 Patent at Figure 16H (annotations added by Plaintiff).

Plaintiff contends that the specification describes that first switching device 1608 and second switching device 1614 are not both on (closed) at the same time given that "the apertures of the control signals for the first and second switching devices 'do not overlap' and are '180 degrees out of phase.'" Response at 4 (citing '342 Patent at Figure 16I, 18:59–61, 19:48–53, 20:40–43).

With respect to Defendant's proposed construction, Plaintiff contends that it improperly "changes the meaning of the claim language" by "impos[ing] synchronized charging/discharging cycles of both first and second capacitors." *Id.* Plaintiff contends that Defendant's proposed construction is "inconsistent with specification embodiments where charging and discharging occurs independently for each capacitor, and at different times," and improperly excludes disclosed embodiments, *.e.g.*, Figures 16H and 16I.

In its reply, Defendant contends that Plaintiff while "interprets 'controlling a charging and discharging cycle,' in the context of Claim 18 and its dependent claims in the '342 Patent, to mean that the switching devices recited in those claims are *dependent* on each other, and therefore do not have 'independent' control inputs[,]" Plaintiff "appears to concede that [Defendant's] proposed interpretation of 'controlling a charging and discharging cycle' is correct as to *each* capacitor in Claim 18 and its dependent claims." Reply at 1–2 (emphases in Defendant's brief). Based on that, Defendant contends that Plaintiff "appears to agree with [Defendant's] proposed construction that each capacitor undergoes a cycle of charging and then discharging based on its respective switch." *Id.* at 2.

In its sur-reply, Plaintiff contends that "[n]one of the words in the disputed term are unclear, nor has [Defendant] argued that they are." Sur-Reply at 1. Rather, Plaintiff contends that Defendant "does *not* seek a construction of the disputed term, but, instead, seeks to *add* the word 'then' into the term in order to rewrite the claim language[,]" which improperly adds a sequential ordering between charging and discharging. *Id.* (emphases in Plaintiff's brief).

Plaintiff contends that Defendant does not provide a substantive response based on the intrinsic record why it is necessary to add "then" in its proposed construction. *Id.* Plaintiff contends that, contrary to Defendant's assertion, it does not agree that "each capacitor undergoes

a cycle of charging and then discharging based on its respective switch." Rather, Plaintiff contends that the language of Claim 18 "makes it clear that the first and second switching devices operate separately (as they are 'electrically coupled to the first and second capacitors, *respectively*'), and therefore the charging/discharging periods of their respective capacitors occur at different times." *Id.* at 2.

Plaintiff contends that Defendant "tries to create confusion by addressing both the 'controlling a charging and discharging cycle' and 'switching device'/ 'switch' terms at the same time[,]" in order to "obscure the straightforward concepts at issue." *Id.*

<u>The Undersigned's Analysis:</u>

After reviewing the parties' arguments and considering the applicable law, the undersigned agrees with Plaintiff that this term should be construed according to its plain-and-ordinary meaning for the reasons that follow. ***First***, the "heavy presumption" is that terms should be construed according to their plain-and-ordinary meaning. *Azure Networks*, 771 F.3d at 1347.

Second, Defendant does not expressly allege lexicography or disclaimer, which are the only two exceptions to the general rule that a term should be construed as having its plain-and-ordinary meaning. *Thorner*, 669 F.3d at 1365.

Third, Defendant's proposed construction unnecessarily adds a temporal ordering between the charging phase and discharging phase of a capacitor. More specifically, if discharging necessarily follows charging, then Defendant's proposed construction is unnecessary and redundant. *U.S. Surgical Corp. v. Ethicon, Inc.*, 103 F.3d 1554, 1568 (Fed. Cir. 1997) (claim construction is "not an obligatory exercise in redundancy"); *C.R. Bard*, 388 F.3d at 863 ("merely rephrasing or paraphrasing the plain language of a claim by substituting synonyms does not

represent genuine claim construction") (internal quotations marks omitted). On the other hand, if Defendant's proposed construction requires that discharging must immediately follow charging—thus excluding situations where the capacitor neither continues charging or starts discharging, *i.e.*, maintains its charge—then Defendant's proposed construction improperly excludes those situations without meeting the "exacting" standards required for disavowal. *Hill-Rom Servs.*, 755 F.3d at 1371 ("The standards for finding lexicography and disavowal are exacting.").

Therefore, for the reasons described above, the undersigned finds that the term should be construed according to its plain-and-ordinary meaning.

B. Term #2: "switching device" / "switch"

Term	Plaintiff's Proposed Construction	Defendant's Proposed Construction
#2: "switching device" / "switch" U.S. Patent No. 7,496,342, Claims 18, 19, 20, 21; U.S. Patent No. 9,118,528, Claims 1, 5, 8, 17, 18, 19, 23, 26, 35, 36 Proposed by Plaintiff	Plain-and-ordinary meaning wherein the plain-and-ordinary meaning is "an electronic device for opening and closing a circuit as dictated by an independent control input"	No construction necessary / Plain and ordinary meaning, or if construction is necessary, an electronic device which opens and closes to break or complete an electrical path in a circuit

Judge Albright, the undersigned, and Judge Gilliland all previously construed this term as plain-and-ordinary meaning wherein the plain-and-ordinary meaning is "an electronic device for opening and closing a circuit as dictated by an independent control input" which is Plaintiff's proposed construction. *ParkerVision, Inc. v. Intel Corp.*, No. 6:20-cv-00108, ECF No. 75 at 6 (W.D. Tex. Jan. 28, 2021); *ParkerVision, Inc. v. HiSense Co., Ltd.*, No. 6:20-cv-00870, ECF No. 51 at 107 (W.D. Tex. Oct. 29, 2021); *ParkerVision, Inc. v. LG Elecs.*, No. 6:21-cv-00520, ECF No. 55 at 32 (W.D. Tex. June 21, 2022).

The Parties' Positions:

Defendant contends that Plaintiff's proposed construction is narrower than the dictionary definition. Opening at 9. Defendant contends that Plaintiff's proposed construction would "exclude embodiments described in the '342 Patent and appears to contradict the claims and specification of the '528 Patent." *Id.* Defendant contends that "[t]here is no support for such a drastic interpretation in the claims, specification, or prosecution history." *Id.*

Defendant contends that Plaintiff's proposed construction is based on a different patent—U.S. Patent No. 6,091,940—which differs "substantially" from the '342 and '528 Patents in this case. *Id.* at 10. Defendant contends that the '342 and '528 Patents are not related to the '940 Patent or each other, and it is an "error" to construe this term based on the construction of a term in an unrelated patent. *Id.* (citing cases).

Defendant contends that a "lay jury can easily understand what a 'switch' and 'switching device' are." *Id.* Defendant contends that the dictionary definition of " "switch" / "switching device" is an "electronic device which opens and closes to break or complete an electrical path in a circuit." *Id.* (citing dictionaries).

Defendant contends that Plaintiff's proposed construction "introduces ambiguity because nothing in [Plaintiff's] definition explains what the control signal is independent of." *Id.* By contrast, Defendant contends that the claims only describe what the "switching device controls when it is in an open or closed state, and does not describe that the signals are required to be independent of other claim features." *Id.* By contrast, Defendant contends that "to the extent the control signals for the switches recited in the '528 Patent claims all have implied differential and/or in-phase/quadrature phase relationships, they can be viewed as ***dependent*** on each other." *Id.* (emphasis in Defendant's brief).

ParkerVision Exhibit 2052
TI and NXP v. ParkerVision - IPR2024-00936

Defendant contends that the'342 and '528 Patents "do not expressly define a 'switch' or 'switching device' to require an 'independent' control input, and nothing in the specifications implies such a requirement." *Id.* at 12. Defendant contends that "[o]n the contrary, the '342 Patent specification includes embodiments where a switch's operation depends on an information signal being up-converted by that switch." *Id.* With respect to the '528 Patent, Defendant contends that the " the '528 Patent specification's lengthy disclosure of a 'switch module' does not mention an 'independent' control input[,]" but rather it "explains that the switches operate ***dependently*** on each other when they differentially sample in-phase/quadrature components of a complex received information signal." *Id.* (citing'528 Patent at 119:10–121:40, 120:65–121:5, 176:37–179:52, 191:41–50). *Id.*

In its response, Plaintiff contends that "[t]his Court has already considered and construed the term *multiple* times. Each time, the Court rejected a construction similar to what [Defendant] proposes here and adopted [Plaintiff's] construction." Response at 5 (citing cases). Plaintiff contends that "[t]his Court has already considered the meaning of this exact term with respect to the '528 patent, one of the patents asserted in this case." *Id.* In addition, Plaintiff contends that the court in the Middle District of Florida "also used this language and rejected the same types of arguments [Defendant] raises for omitting the language." *Id.* at 6 (citing Opening, Ex. B at 25–33).

With respect to Defendant's argument that the '940 Patent is "unrelated" and "differs substantially" from the '342 and '528 Patents, Plaintiff contends that is incorrect as both patent incorporate the '940 Patent by reference. *Id.* (citing '528 Patent at 1:35–40, '342 Patent at 1:25–27).

With respect to Defendant's argument that "independent" introduces ambiguity into the claim language, Plaintiff contends that the meaning of "independent" clear on its face. *Id.* Plaintiff contends that "each disclosed embodiment in the '342 and '528 patents depicts a switch with an independent control input (i.e., an input, an output, and a control input)." *Id.* (citing '528 Patent at Figures 63, 64A, 64B, 65, 66A-D, 67A, 68G; '342 Patent at Figures 3A, 16A, 16H, 16O, 18A, 20A, 20E, 20F, 21).

Plaintiff contends that Defendant "misrepresent[s]" the patent specifications by pointing to the "'342 patent as showing some alleged dependence between the control signal and an information signal, and the '528 patent as showing some alleged dependence between the control signal of one switch and the control signal of another switch." *Id.* at 6–7 (citing '342 Patent at 2:17–30; '528 Patent at 119:10–121:40, 120:65–121:5, 76:37–179:52, 191:41–50). Rather, Plaintiff contends that "even if [Defendant's] characterizations were correct (which they are not), it does not change the fact that there is always a second input (i.e., an independent control input) coming into each switch." *Id.* at 7.

Plaintiff contends that "the claims themselves demonstrate that the 'switching device'/ 'switch' must have an 'independent control input.'" *Id.* More specifically, Plaintiff contends that "Claim 1 of the '342 patent, for example, recites 'a first and second *switching device* each having a first, second, *and* third port.'" *Id.* (emphases in Plaintiff's brief). Plaintiff contends that

> Similarly, the '528 patent discloses an input control signal that is coupled to the switch and that is separate from the input signal (i.e., modulated carrier signal/RF signal) and output: "a first switch coupled to *a first control signal* …, wherein the first switch is on and a portion of energy that is distinguishable from noise is transferred from *the modulated carrier signal* as *an output* of said first switch[.]"

Id. (quoting '528 Patent, Claim 1 (emphases in Plaintiff's brief)).

In its reply, Defendant contends that while Plaintiff "interprets 'controlling a charging and discharging cycle,' in the context of Claim 18 and its dependent claims in the '342 Patent, to mean that the switching devices recited in those claims are *dependent* on each other, and therefore do not have 'independent' control inputs[,]" Plaintiff "continues to insist that there is nothing wrong with a definition of 'switching device' and 'switch' that requires an 'independent' control input. Reply at 1 (emphasis in Defendant's brief). Based on that, Defendant contends that Plaintiff "appears to agree with [Defendant's] proposed construction that each capacitor undergoes a cycle of charging and then discharging based on its respective switch." *Id.* at 2.

Defendant contends that its opening brief explained how the "phase relationship between switches requires their control inputs to be *dependent* on one another," but Plaintiff does not respond to those arguments. *Id.* (emphasis in Defendant's brief). Defendant contends that Plaintiff "focuses only on a single switch in arguing that the 'independent' control input is independent only of the input and output of the ***same*** 'switching device'/'switch.'" *Id.* (emphasis in Defendant's brief). But Defendant contends that "distinction is beside the point because the issue is about the dependent relationship of the two switches and capacitors." *Id.* Furthermore, Defendant contends that Plaintiff's proposed construction is confusing because "it does not identify what the 'independent' control signal is *independent of*" and because "there is a *dependence* between control signals in the asserted claims[.]" *Id.* (emphases in Defendant's brief).

In its sur-reply, Plaintiff contends that Defendant "conflates 'control signal' with 'control input.'" Sur-Reply at 3. More specifically, Plaintiff contends that "an independent control input is an input separate from the input or output of the switch." *Id.* Plaintiff contends that "[n]on-overlapping control signal apertures, resulting in first and second switching devices not closing

(turning ON) at the same time, is irrelevant and does not negate the presence of an independent control input, as [Defendant] suggests." *Id.*

With respect to Defendant's argument that Plaintiff's focus on a single switch is incorrect because "the issue is about the dependent relationship of the *two* switches and capacitors[,]" Plaintiff contends that the term in dispute is a "switching device" / "switch." *Id.* (emphasis in Plaintiff's brief).

<u>The Undersigned's Analysis:</u>

After reviewing the parties' arguments and considering the applicable law, the undersigned agrees with Defendant that the terms "switch" and "switching device" should be construed as "an electronic device for opening and closing a circuit."

In light of the Federal Circuit's decision in *ParkerVision, Inc. v. Vidal*, the undersigned concludes that construction of this term turns on whether Plaintiff is collaterally estopped. Appeal No. 2022-2173 (Fed. Cir. 2024). If so, then the Federal Circuit's construction in *Vidal* ("an electronic device for opening and closing a circuit") is the correct construction. For collateral estoppel to apply, "(1) the issue at stake must be identical to the one involved in the prior action; (2) the issue must have been actually litigated in the prior action; and (3) the determination of the issue in the prior action must have been a necessary part of the judgment in that earlier action." *Next Level Commc'ns LP v. DSC Commc'ns Corp.*, 179 F.3d 244, 250 (5th Cir. 1999).

Whether the issues are identical: With respect to the first element, in the IPR, Plaintiff proposed that "switch" should be construed as "an electronic device for opening and closing a circuit as dictated by an independent control input." *Intel Corp. v. ParkerVision, Inc.*, IPR2021-00346, Paper 33 at 19 (P.T.A.B. June 30, 2022). Here, the terms-at-issue are "switch" / "switching

device." Obviously, the term "switch" is identical in the IPR and in this case. The undersigned concludes that "switching device" is also the same as "switch" for a few reasons. ***First***, the specification of the '528 Patent appears to use "switching device" and "switch" synonymously. '528 Patent at 113:55–60 ("In an embodiment, the switch modules discussed herein can be implemented as a series of switches operating in parallel as a single switch. The series of switches can be transistors, such as, for example, field effect transistors (FET), bi-polar transistors, or any other suitable circuit switching devices."). Similarly, the specification of the '342 patent describes a "switching device" essentially as a device that opens and closes based on a control signal, which is also the description of a switch. '342 Patent at 25:44–46. ***Second***, the parties make identical arguments for both "switch" and "switching devices," which indicates that the parties also consider the two to be synonymous. ***Third***, Plaintiff proposes the exact same construction that it proposed during the IPR, which further indicates that Plaintiff considers that "switch" and "switching devices" are synonymous.

Furthermore, the IPR was for U.S. Patent No. 8,190,108. The '108 Patent claims priority and shares a specification with U.S. Patent No. 6,091,940. The '940 Patent also contains the key passage that the PTAB relied on in its construction. '940 Patent at 1:54–60. Both the '342 and '528 Patents incorporate the '940 Patent. '342 Patent at 1:25–27, '528 Patent at 1:38–40. The fact that the paragraph that is at-issue in this case is identical to the paragraph involved in the prior action indicates that the issues are the same.

Therefore, the undersigned concludes that the issue in the current case is identical to the one involved in the prior action.

Whether the issue was actually litigated: With respect to the second element, the undersigned concludes that the parties actually litigated the issue in the prior action. The parties

disputed the construction of the exact term (and a synonym) in the PTAB, and the PTAB rejected Plaintiff's proposed contruction. *Intel*, IPR2021-00346, Paper 33 at 25–26 ("Based on our review of the complete record before us, including the intrinsic and extrinsic evidence, we determine that one of ordinary skill in the art would understand 'switch' to mean 'an electronic device for opening and closing a circuit.'"). The Federal Circuit issued a Rule 36 judgment for that IPR. *Vidal*, Appeal No. 2022-2173, at 2.

Whether issue was a necessary part of judgment in earlier action: With respect to the third issue, the undersigned concludes that the determination of the issue in the prior action must have been a necessary part of the judgment in that earlier action. More specifically, the PTAB found that Claim 1 of U.S. Patent No. 8,190,108 to be invalid because the prior art disclosed, *inter alia*, a "switch." *See, e.g.*, *Intel*, IPR2021-00346, Paper 33 at 40. Therefore, the PTAB's construction of "switch" was a necessary part of the PTAB's conclusion that the claims were invalid.

Therefore, because collateral estoppel applies, the undersigned concludes that the construction of "switch" and "switching device" should be "an electronic device for opening and closing a circuit."

C. Term #3: "matched filtering/correlating module"

Term	Plaintiff's Proposed Construction	Defendant's Proposed Construction
#3: "matched filtering/correlating module" U.S. Patent No. 7,865,177, Claim 14 Proposed by Plaintiff	"linear time-variant circuitry that samples a modulated RF (radio frequency) carrier signal at an aliasing rate using a switch with an independent control input driven by a control signal with a non-negligible, periodic aperture, such that the samples, having non-negligible available energy, are accumulated and transferred to a load while the switch is closed and discharged through the load while the switch is open, thereby transferring available real power from the modulated RF carrier signal to the load and producing a downconverted signal with enhanced signal-to-noise power ratio"	No construction necessary / plain-and-ordinary meaning

<u>The Parties' Positions:</u>

Defendant contends that Plaintiff's proposed construction "strays wildly from the language in claims and the specification, and fails to capture the meaning of the disputed term." Opening at 14.

Defendant contends that "[w]hile the '177 Patent does not use the phrase 'matched filtering/correlating module' outside of the claims," it uses similar phrases, e.g., "matched filtering/correlating operation." *Id.* (citing '177 Patent at 10:42–46, 18:65–67, 19:10–11, 130:23–142:42; Figures 148, 149, 150, 151, 152, 153). Defendant contends that "the consistent characteristic of the described invention is that the system, or processor, or process, or embodiment

'down-convert an electromagnetic signal by repeatedly performing a matched filtering or correlating operation on a received carrier signal.'" *Id.* (citing '177 Patent at 130:22–25).

Defendant contends that "[t]he plain meaning of the term would further have been obvious to a person of ordinary skill in the art at the time of the invention." *Id.* More specifically, Defendant contends that the specification describes that "the invention was a 'specific application of matched filter theory, sampling theory and frequency domain techniques.'" *Id.* (quoting '177 Patent at 130:4–8). Defendant further contends that matched filtering and correlating were well known in the art. *Id.* (citing '177 Patent at 130:8–9).

Defendant contends that the '177 Patent provides for "three specific embodiments of methods for 'downconverting an electromagnetic signal using a matched/filtering correlating operation' in Figures 148, 150, 152[,]" that each have different implementations. *Id.* at 14–15, 16. Defendant contends that:

> Notably, each of these embodiments provides a different example system for implementing the matched filtering/correlating operation, with the common characteristic being that "a matched filtering/correlating operation is performed on a portion of a carrier signal," "the result of the matched filtering/correlating operation … is accumulated, preferably in an energy storage device[,]" and that these steps "are repeated for additional half cycles of the carrier signal."

Id. at 15 (quoting '177 Patent at 131:17-44; 132:54-133:14; 133:62-134:22). Defendant contends that "[w]hile each of these systems in these embodiments shares the common characteristics of performing matched filtering/correlating operations, they do not share the same structure. Thus, the plain and ordinary meaning of the term is closest to the language of the claims and the description in the specification." *Id.* at 16.

Defendant contends that Plaintiff's proposed construction imports limitations "unrelated to matched filtering or correlating operations, and that are not necessarily shared across the disclosed embodiments." *Id.* Defendant first contends that Plaintiff's proposed construction is "entirely

divorced from the language of the claims—nothing in [Plaintiff's] construction recites the core characteristics of performing matched filtering or correlating operations." *Id.* Defendant contends that the core characteristics involve repeating the steps of "1) performing a matched filtering/correlating operation on a portion of a carrier signal, and 2) accumulating the results of the matched filtering correlating operation." *Id.* (citing '177 Patent at 131:14–16, 132:51–53, 133:59–61). Defendant contends that Plaintiff's proposed construction "simply requires sampling a signal and then accumulating those samples[,]" but that "merely sampling a signal is not performing a matched filtering/correlating operation." *Id.* at 16–17. Rather, Defendant contends that "matching" refers to "correlating—the sample apertures with the input signal is the point of the invention, because it allows the matched filtering/correlating operation to capture the energy of the signal as opposed to the energy of the noise[,]" as depicted in Figure 184. *Id.* at 17.

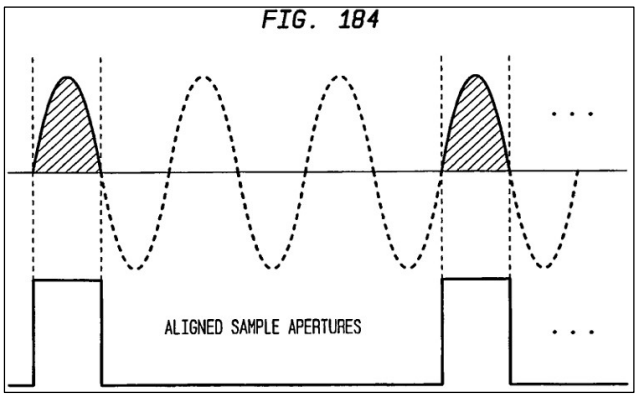

Defendant contends that Plaintiff's "failure to capture the key language and concept of the very limitation they seek to construe is fatal to its construction." *Id.* at 18.

Defendant next contends that Plaintiff also improperly "adds narrowing limitations that read out embodiments from the specification." *Id.* Defendant contends that, for example, Plaintiff's proposed construction improperly requires that the "matched filtering/correlating module" samples a "modulated RF (radio frequency) carrier signal." *Id.* Defendant appears to contend that this is incorrect as it may limit the claim term to two disclosed embodiments. *Id.*

Defendant also contends that this limitation improperly limits the claim language which only requires "receiving an input signal at a first matched filtering/correlating module." *Id.* (quoting '177 Patent, Claim 14).

Defendant next contends that Plaintiff's proposed construction also improperly requires that "the switch of the matched filtering/correlating module be operated such that 'samples, having nonnegligible available energy, are accumulated and transferred to a load while the switch is closed and discharged through the load while the switch is open.'" *Id.* Defendant contends that this additional improperly requires a load, thereby excluding embodiments without a load. *Id.* at 18–19 (citing '177 Patent at Figures 149, 151).

Defendant finally contends that "available real power from the modulated RF carrier signal to the load" in Plaintiff's proposed construction does not appear in the '177 Patent. *Id.* at 19. Defendant contends that it is not "aware of any general accepted meaning of the term." *Id.* Defendant contends that, by contrast, Plaintiff's proposed construction would "would transfer zero power in circumstances in which the sampling aperture is not correlated with the input signal" as depicted in the annotated version of Figure 184.

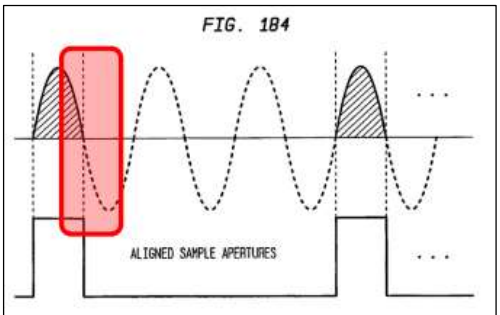

Fig. 184 (Annotated)

Id. (annotation in Defendant's brief).

In its response, Plaintiff contends that the court in the Middle District of Florida adopted Plaintiff's proposed construction. Response at 8. Plaintiff contends that "the '177 specification

explains that 'the description of the present invention contained herein is a unique and specific application of matched filter theory, sampling theory, and frequency domain techniques. It is not taught or suggested in the present literature." *Id.* (quoting '177 Patent at 130:4–9). Based on that, Plaintiff contends that "the term is not straightforward nor does it have a plain and ordinary meaning[.]" *Id.*

Plaintiff contends that its proposed construction "comes directly from the specification, and captures a number of structural details, which together provide an accurate description of the '177 matched filter/correlator embodiments (as shown in Figures 149, 151, and 153)[.]" *Id.* With respect to "linear time-variant circuitry" in its proposed construction, Plaintiff contends that the disclosed embodiments are linear time-variant circuits. *Id.* (citing '177 Patent at Figures 149, 151, 153; 172:50–51).

With respect to "that samples a modulated RF (radio frequency) carrier signal at an aliasing rate" in its proposed construction, Plaintiff contends that the claimed invention "is not a traditional realization of a matched filter designed to extract information at the data bandwidth[,]" but rather that "the correlation properties of the filter of the embodiments exploit specific attributes of bandpass waveforms to *efficiently down convert signals from RF*." *Id.* (citing '177 Patent at 136:46, 136:51–56) (emphasis in Plaintiff's brief). Plaintiff contends that the specification describes extracting samples and that "[i]f many such matched filter correlation *samples* are extracted, the original information modulated onto the carrier is recovered." *Id*. at 9 (quoting '177 Patent at 154:29–31, 140:41–46 (emphasis in Plaintiff's brief)). Plaintiff contends that the present invention is directed towards "down-converting an electromagnetic (EM) signal by aliasing the EM signal. . . . By taking a carrier and aliasing it at an aliasing rate, the invention can down-convert that carrier to lower frequencies." *Id.* (quoting '177 Patent at 26:22–28).

With respect to "using a switch with an independent control input driven by a control signal with a non-negligible, periodic aperture" in Plaintiff's proposed construction, Plaintiff contends that "the embodiments shown in each of Figures 149, 151, and 153 include a switch (14904, 15102, and 15304, respectively)[.]" *Id.* (citing '177 Patent at Figures 149, 151, 153; 131:59, 131:66–67, 133:27, 133:29–30, 134:34, 134:37–38). Plaintiff further contends that the control signal has a non-negligible aperture length T_A, *e.g.*, the length of a half cycle of the carrier signal. *Id.* (citing '177 Patent at 132:1–3).

With respect to "such that the samples, having non-negligible available energy" in Plaintiff's proposed construction, Plaintiff contends that "[t]he energy transferred is nonnegligible, because 'a matched/filtering/correlating process … preserves the energy of the electromagnetic signal and transfers it through the processor.'" *Id.* (citing '177 Patent at 130:37–39).

With respect to "are accumulated and transferred to a significant load while the switch is closed and discharged through the load while the switch is open" in Plaintiff's proposed construction, Plaintiff contends that the specification describes that "[t]he results of each matched filtering/correlating process are accumulated, for example using a capacitive storage device, and used to form a down-converted version of the electromagnetic signal." *Id.* (quoting '177 Patent at 130:28–31). Plaintiff contends that "energy is transferred to a load (e.g., resistor R_L in Figure 175A or resistor R in Figure 175B), because the load is connected across the storage device (e.g., capacitor C in Figure 175A or capacitor C_S in Figure 175B). *Id*. at 9–10 (citing '177 Patent at 147:35–42, Figures 175A–C).

With respect to "thereby transferring available real power from the modulated RF carrier signal to the load" in Plaintiff's proposed construction, Plaintiff contends that the patent "derives

equations that describe the effect that circuit and aperture timing values have on the power transferred to the load." *Id.* at 10 (citing '177 Patent at 148:25–149:19).

With respect to "and producing a downconverted signal with enhanced signal-to-noise power ratio" in Plaintiff's proposed construction, Plaintiff contends that the matched filtering/correlating operations "produce[] *enhanced* (*and in some cases the best possible) signal-to-noise ratio[] (SNR) for the processed waveform*." *Id*. (quoting '177 Patent at 130:34–37 (emphasis in Plaintiff's brief)).

In its reply, Defendant contends that Plaintiff "fails to address the basic question of whether a 'matched filtering/correlating module' must perform matched filtering and correlating, fails to address [Defendant's] proposed construction, and fails to address [Defendant's] arguments in its opening brief." Reply at 3. Rather, Defendant contends that Plaintiff "cites haphazardly to varied sections of the hundred-page specification, without an attempt to explain why it cherry picks a sentence here and a phrase there to cobble together a construction." *Id.*

Defendant contends that Plaintiff "does not address the fundamental dispute between the parties—does a matched filtering/correlating module perform 'a matched filtering or correlating operation on a received carrier signal'?" *Id.* Rather, Defendant contends that "nothing in [Plaintiff's] construction requires (or even relates to) performing matched filtering or correlating operations," despite the passage that Plaintiff cites stating that the embodiments "can be viewed as a matched filter or correlator operation, which in embodiments is normally applied recursively to the carrier signal at a sub-harmonic rate[.]" *Id.* at 3–4 (citing '177 Patent at 154:25–29).

Defendant contends that Plaintiff's other citations support Defendant's proposed construction as opposed to Plaintiff's. *Id.* at 4. Defendant contends that, for example, that Plaintiff "quotes the specification for the fact that the matched filter/correlator embodiments 'downconvert

an electromagnetic signal by repeatedly performing a matched filtering or correlating operation on a received carrier signal[,]' but once again fails to acknowledge this requirement in its construction." *Id.*

With respect to Plaintiff's argument that the invention uses a novel matched filtering/correlating module, Defendant contends that the passage that Plaintiff cites ('177 Patent at 130:4–9) describes "'the present invention' as a whole, meaning the application of several theories and techniques, and not talking about the matched filtering/correlating ***module*** itself." *Id.* at 5 (emphasis in Defendant's brief). More specifically, Defendant contends that "the inventors went on to specifically claim a traditional matched filtering/correlating module as an element of that non-traditional system." *Id.* Defendant contends that had Plaintiff intended to claim a novel "matched filtering/correlating module," then "they would not have intentionally used the term matched filter/correlator module, they would not have described that module as performing matched filter or correlating operations, and they would not have illustrated those modules as matched filters and correlators." *Id.* Furthermore, Defendant contends that Plaintiff "identifies no special or particular definition created by the inventors, and so the term should be given its "ordinary and accustomed meaning[.]" *Id.* (citing *Renishaw PLC v. Marposs Societa Per Azioni*, 158 F.3d 1243, 1249 (Fed. Cir. 1998)).

Defendant contends that Plaintiff's proposed construction "fails to distinguish between sampling a signal and performing a matched filtering or correlating operation." *Id.* Defendant contends that "[w]hile the application of the matched filter may result in a sample, it does not follow that all sampling is the application of a matched filtering/correlating operation." *Id.* at 5–6.

Defendant contends that Plaintiff does not rebut Defendant's argument that Plaintiff's proposed construction excludes the embodiments in Figures 149 and 151, which do not include a load. *Id.* at 6. Rather, Defendant contends that Plaintiff "points to Figure 175, which has a completely different circuit topology." *Id.*

In its sur-reply, Plaintiff contends that "[w]hile a 'matched filtering/correlating module' conceptually relates to matched filter theory, sampling theory, and frequency domain techniques, the specification makes it clear that this module is something different than what was known in the art." Sur-Reply at 4–5 (citing '177 Patent at 130:4–9).

Plaintiff contends that "[b]ecause a 'matched filtering/correlating module' is not something from the then-existing literature, just as the District Court in Florida did, one must look at the specification to understand the meaning of this term." *Id.* at 5.

Plaintiff contends that its proposed construction "includes a number of structural details as well as functional language, which together provide an accurate description of the '177 patent matched filter/correlator embodiments and how they operate." *Id.* at 5–6.

With respect to Defendant's argument that Plaintiff's citations actually support Defendant's proposed construction, Plaintiff contends that Defendant "merely cherry-picks select portions of the specification that support its construction, while ignoring the others." *Id.* at 6. In particular, Plaintiff contends that Defendant "only identifies two (reciting similar language) that allegedly support its argument." *Id.*

With respect to Defendant's argument that Plaintiff's proposed construction excludes some embodiments by requiring a load, Plaintiff contends that "the specification makes it clear that 'the general forms of the differential equation and transfer function, described above, for embodiments

of the present invention *are the same* as for a case involving a load resistor, R_L, applied across capacitor, C' which is illustrated in Figure 175A-C." *Id.* (emphasis in Plaintiff's brief).

The Undersigned's Analysis:

After reviewing the parties' arguments and considering the applicable law, the undersigned agrees with Defendant that this term should be construed according to its plain-and-ordinary meaning wherein the module samples an input signal at an aliasing rate for the reasons that follow. ***First***, the "heavy presumption" is that terms should be construed according to their plain-and-ordinary meaning. *Azure Networks*, 771 F.3d at 1347.

Second, Plaintiff does not expressly allege lexicography or disclaimer, which are the only two exceptions to the general rule that a term should be construed as having its plain-and-ordinary meaning. *Thorner*, 669 F.3d at 1365.

Third, although the Plaintiff argues that plain-and-ordinary meaning "cannot" be the correct construction because the specification teaches that "the operation of the present invention *represents a* ***new*** *signal-processing paradigm*" and "the description of the present invention contained herein is *a* ***unique*** **and** ***specific application*** **of matched filter theory, sampling theory, and frequency domain techniques. It is** ***not taught or suggested*** **in the present literature**[,]" the undersigned disagrees. Response at 5–6 (emphases in Plaintiff's brief). More specifically, the undersigned concludes that neither passage actually describes that the "matched filter/correlation" module is a coined term or that the claimed invention describes these components in a way so as to redefine them, let alone rise to the "exacting" standard required for lexicography. *Hill-Rom Servs.*, 755 F.3d at 1371 ("The standards for finding lexicography and disavowal are exacting."). The first sentence ("the operation of the present invention represents a new signal-processing

paradigm") simply recites the patentees' belief that the present invention is a new signal-processing paradigm. The second sentence reiterates the point of the first sentence, albeit in more detail; namely, that the present invention uses a specific combination of matched filter theory, sampling theory, and frequency domain techniques. The undersigned does not find either sentence to be remarkable as all patents need to be novel. 35 U.S.C. § 102. Furthermore, the undersigned does not believe that this sentence uses the terms "matched filtering" and/or "correlation" in such a way that redefines the meaning of either term or the combination thereof. Rather, the passages only appear to describe that the claimed invention uses known techniques (matched filter theory, sampling theory, and frequency domain techniques) in a novel and unique combination.

Finally, to the extent that either sides' proposed construction excludes any embodiments, the undersigned concludes that the scope of the claim term includes all embodiments described at '177 Patent at 130:49–132:17. *Oatey Co. v. IPS Corp.*, 514 F.3d 1271, 1276 (Fed. Cir. 2008) ("We normally do not interpret claim terms in a way that excludes embodiments disclosed in the specification … where claims can reasonably be interpreted to include a specific embodiment, it is incorrect to construe the claims to exclude that embodiment, absent probative evidence to the contrary."). This passage describes three embodiments, which can be found in Sub-Section 1.1 ("High Level Description of a Matched Filtering/Correlating Characterization/Embodiment of the Invention"), Sub-Section 1.2 ("High Level Description of a Finite Time Integrating Characterization/Embodiment of the Invention"), and Sub-Section 1.3 ("High Level Description of an RC Processing Characterization/Embodiment of the Invention"). Section 1, which is entitled "Overview of the Invention," implies that each of the following subsections describe matched filtering/correlating operation. '177 Patent at 130:23–25 ("Embodiments of the present invention down-convert an electromagnetic signal by repeatedly performing a matched filtering or

correlating operation on a received carrier signal."). That section further implies that other methods, *e.g.*, finite time integrating operation and an RC processing operation, are more practical ways of implementing matched filtering/correlating operation. *Id.* at 130:40–44. But the specification describes that the invention is also directed towards these other embodiments. *Id.* at 130:29–30.

Furthermore, Sub-Section 1.1, which is entitled "High Level Description of a Matched Filtering/Correlating Characterization/Embodiment of the Invention," plainly describes a matched filtering/correlating module.[2] *Id.* at 132:49–132:17. Sub-Section 1.2 describes that a finite time integrator can be used as an "approximation" of a matched filter/correlator. *See id.* at 133:43–44; *see also id.* at 132:20–36. Similarly, Sub-Section 1.3 describes that the matched filter/correlator may be further approximated by using a resistor/capacitor (RC) processor. *Id.* at 133:43–47. Therefore, the undersigned concludes that, based on these passages, a POSITA would understand that the finite time integrator and RC processor embodiments are approximations of the matched filter/correlator. As such, all three embodiments are within the scope of this term.

Given how the specification of the '177 Patent describes the "present invention," the undersigned's recommended construction clarifies the meaning of plain-and-ordinary meaning in the context of this patent by adding "wherein the module samples an input signal at an aliasing rate." *Verizon Servs. Corp. v. Vonage Holdings Corp.*, 503 F.3d 1295, 1308 (Fed. Cir. 2007) ("When a patent thus describes the features of the 'present invention' as a whole, this description

[2] While the last paragraph in this section recites that "[a]s will be apparent to persons skilled in the relevant arts given the discussion herein, the present invention is not a traditional realization of a matched filter/correlator," the undersigned still concludes that the patentees did not coin a new term and/or act as their own lexicographer. '177 Patent at 132:15–17. Rather, the word "realization" indicates that the ***implementations*** of specific matched filter/correlator embodiments is new (*i.e.*, non-traditional), and not that the ***meaning*** of "matched filter/correlator" is new. The very next paragraph describes that the implementation of the "matched filter/correlator embodiment" may be too expensive or complicated. *Id.* at 132:24–27. That paragraph further explains that lower cost embodiments that provide acceptable results are available. *Id.* at 132:27–29. These sentences further confirm that "realization' refers to the implementation of the claimed matched filter/correlation modules.

limits the scope of the invention"). More specifically, the specification describes that "[c]ontrary to conventional wisdom, the present invention is a method and system for down-converting an electromagnetic (EM) signal by aliasing the EM signal." '177 Patent at 26:23–25; *see also* '177 Patent at 1:65–67.

Therefore, for the reasons described above, the undersigned finds that the term should be construed according to its plain-and-ordinary meaning wherein the module samples an input signal at an aliasing rate.

D. Term #4: "first channel down-converted signal"

Term	Plaintiff's Proposed Construction	Defendant's Proposed Construction
#4: "first channel down-converted signal" U.S. Patent No. 7,865,177, Claim 14 Proposed by Defendant	Plain-and-ordinary meaning	"An I-phase down-converted signal or a Q-phase down-converted signal"

<u>The Parties' Positions:</u>

Defendant contends that

> The parties' dispute ultimately turns on one key question—should the term "channel" in the claim limitation "first channel down-converted signal" be given the construction provided in the specification of the '177 Patent consistent with the terms used in the other claims of the patent, or should the jury be left without any guidance.

Opening at 20.

Defendant contends that the '177 Patent uses the term "channel" to "describe different phases of an electromagnetic information signal" and not in the ordinary sense of the term. *Id.* More specifically, Defendant contends that the specification describes "two discrete channels—I-channel and Q-channel—in the portion of the specification titled 'III. Energy Transfer/4.4

Optimized Switch Structures' and '4.5 Example I and Q Implementations.'" *Id.*at 20–21 (citing '177 Patent at 18:27–35; 113:18–114:21). Defendant further contends that specification describes a "Single Channel Receiver Embodiment," in which the single channel "correspond[s] to either the I or Q channel of [an] I/Q modulation receiver[.]" *Id.* at 21.

Defendant contends that other unasserted claims support its construction. *Id.* at 21–22. In particular, Defendant contends that Claim 12 "confirms that a first (or second) channel down-converted signal can be either an I-phase down-converted signal or a Q-phase down-converted signal." *Id.* at 22.

In its response, Plaintiff contends that the term does not require construction as the language is straightforward, and there are no unclear words. Response at 11.

Plaintiff contends that Defendant's proposed construction improperly replaces "channel" with "I-phase" or "Q-phase," which "narrow[s] the method for down-converting an electromagnetic signal to signals having a particular modulation scheme (I/Q modulation)." *Id.* Plaintiff contends that, by contrast, the specification describes that "[t]he invention is applicable to any type of EM signal, including but not limited to, modulated carrier signals (the invention is applicable to any modulation scheme or combination thereof) and unmodulated carrier signals[,]" and is not limited to Defendant's proposed construction. *Id.* Plaintiff contends that Defendant "fails to identify any lexicography or disclaimer that justifies its unduly narrow construction." *Id.*

With respect to Defendant's argument regarding the "Single Channel Receiver Embodiment," Plaintiff contends that the passage describes an exemplary embodiment. *Id.* (citing '177 Patent at 173:61–64). Based on that, Plaintiff contends that Defendant's proposed construction improperly limits the claim term of a disclosed embodiment. *Id.* (citing cases).

With respect to Defendant's argument that unasserted claims supports its proposed construction, Plaintiff contends that Claim 12 recites "wherein said first channel down-converted signal comprises *an I-phase information signal* portion of said RF I/Q modulated signal, and wherein said second channel down-converted signal comprises *a Q-phase information signal portion* of said RF I/Q modulate signal." *Id.* at 12–13 (emphases in Plaintiff's brief). Given that claim language, Plaintiff contends that Defendant's proposed construction violates the doctrine of claim differentiation as it also incorporates "I-phase" and "Q-phase." *Id.* (citing cases).

In its reply, Defendant contends that the dispute is whether a "first channel down-converted signal" is "one channel of a down-converted signal—I-phase or Q-phase" (Defendant's position) does it refer to "any down-converted signal, including multiple channels of a down-converted signal" (Plaintiff's position). Reply at 6.

Defendant contends that Plaintiff argues that "first channel" has no meaning, which is incorrect as it reads those words out of the claim term. *Id.* at 6–7.

With respect to Plaintiff's argument that Defendant's proposed construction limits the claim term to specific embodiments, Defendant contends that the specification "does not introduce the concept of an I-phase channel and Q-phase channel in a specific embodiment, but rather the overall description of 'Energy Transfer' as an inventive concept." *Id.* at 7 (citing '177 Patent at 2:7–12, 18:27–35, 113:18–114:21, 113:59-64).

With respect to Plaintiff's argument that Defendant's proposed construction violates the principle of claim differentiation, Defendant contends that "claims 1 and 14 are directed to single-channel receiver embodiments—reciting a 'first channel down-converted signal'—whereas dependent claim 5 is directed to a multi-channel receiver embodiment—adding the limitation of a 'second channel down-converted signal.'" *Id.* at 7–8. Defendant contends that "[t]his single

versus multiple channels distinction is what is different between the claims, and [Defendant's] proposal aligns with the single channel ('an I-phase downconverted signal ***or*** a Q-phase down-converted signal')." *Id.* at 8 (emphasis in Defendant's brief). Defendant contends that the fact that dependent Claim 12 adds the limitation of "first channel down-converted signal comprises an I-phase information signal portion" indicates Defendant's proposed construction is correct. *Id.*

In its sur-reply, Plaintiff contends that the term does not require construction as the language is straightforward, and there are no unclear words. Sur-Reply at 7.

Plaintiff contends that Defendant's proposed construction is "based on the false assumption that there are only I-phase and Q-phase signals. But in signal processing, particularly in different modulation schemes, there are other channels beyond just I-channel ('I-phase') and Q-channel ('Q-phase')." *Id.* (citing'177 Patent at 29:53–55 (reciting FSK, PSK, and SKG signals)). Plaintiff contends that the term "first channel down-converted signal" "simply implies the processing of a modulated signal, and 'first channel' simply refers to a specific channel of the modulated signal that has been down-converted." *Id.*

Plaintiff contends that "[n]othing in [Defendant's] reply demonstrates that a 'first channel down-converted signal' must be limited to an 'I-phase' or a 'Q-phase' down-converted signal." *Id.* By contrast, Plaintiff contends that "[w]here the patentees wanted to limit the scope of the claims to a particular I/Q modulation embodiment, they explicitly used the terms 'I-phase,' 'Q-phase,' and 'I/Q modulated signal' in the claim language." *Id.* (citing '177 Patent, Claims 11–12). Furthermore, Plaintiff contends that specification "clearly states that the invention is not limited to systems for down-converting I/Q modulated signals." *Id.* at 7–8 (citing '177 Patent at 3:37–40, 27:18–20). Additionally, Plaintiff contends that Defendant's "supporting citations are clearly

described in the specification as *embodiments*." Sur-Reply at 8 (citing '177 Patent at 18:30, 113:22–23) (emphasis in Plaintiff's brief).

Finally, respect to claim differentiation, Plaintiff contends that Defendant "fails to recognize that its proposed construction would necessarily read the 'RF/IQ modulated signal' limitation from dependent claim 11 into independent claim 1." *Id.* Plaintiff contends that does not "explain or even address how [the] presumption [of claim differentiation] is overcome here." *Id.*

The Undersigned's Analysis:

After reviewing the parties' arguments and considering the applicable law, the undersigned agrees with Plaintiff that this term should be construed according to its plain-and-ordinary meaning for the reasons that follow. ***First***, the "heavy presumption" is that terms should be construed according to their plain-and-ordinary meaning. *Azure Networks*, 771 F.3d at 1347.

Second, Defendant does not expressly allege lexicography or disclaimer, which are the only two exceptions to the general rule that a term should be construed as having its plain-and-ordinary meaning. *Thorner*, 669 F.3d at 1365.

Third, Defendant's proposed construction improperly limits the claim term to a disclosed embodiment. *Liebel-Flarsheim*, 358 F.3d at 913 ("[I]t is improper to read limitations from a preferred embodiment described in the specification—even if it is the only embodiment—into the claims absent a clear indication in the intrinsic record that the patentee intended the claims to be so limited."). More specifically, the passage that Defendant cites in supports of its proposed construction clearly describes that the passage is describing an embodiment. '177 Patent at 173:61–64 ("a processor according to an embodiment of the present invention").

Defendant appears to argue that the patentees limited the scope of the claim term through its discussion of the present invention. *See, e.g.*, Reply at 7 ("the specification of the '177 Patent does not introduce the concept of an I-phase channel and Q-phase channel in a specific embodiment, but rather the overall description of 'Energy Transfer' as an inventive concept.). "It is true that, in some circumstances, a patentee's consistent reference to a certain limitation or a preferred embodiment as 'this invention' or the 'present invention' can serve to limit the scope of the entire invention, particularly where no other intrinsic evidence suggests otherwise." *Absolute Software, Inc. v. Stealth Signal, Inc.*, 659 F.3d 1121, 1136 (Fed. Cir. 2011).

Here, however, the undersigned concludes that the evidence Defendant cites ('177 Patent at 2:7–12, 18:27–35, 113:18–114:21, 113:59-64) does not indicate that the patentees intended to limit the claim scope as described in Defendant's proposed construction. The first passage merely describes that multiple channels are used, without requiring that the "first channel down-converted signal" is limited to "an I-phase down-converted signal or a Q-phase down-converted signal." The second passage is simply a citation to Sections 4.4, 4.5, and 4.6 in an outline of the patent. The last two passages cite to a portion of and to the entirety of Section 4.4. Collectively, the second, third, and fourth passages are all from three sections (4.4., 4.5, and 4.6), which occupy less than six columns of text out of a specification that has over 190 columns. Furthermore, these sections are part of Section 4, which is entitled "Implementation Examples." Section 4.5 itself is entitled "Example I and Q Implementation." At most, these passage describes specific implementation examples, which falls far short of the standard require to limit a claim term to the present invention. *Voda v. Cordis Corp.*, 536 F.3d 1311, 1320–22 (Fed. Cir. 2008) (although parts of the specification referred to a certain embodiment as the "present invention," the specification did not uniformly

refer to the invention as being so limited, and the prosecution history did not reveal such a limitation).

Fourth, the undersigned agrees with Plaintiff that "first channel down-converted signal" "simply implies the processing of a modulated signal, and 'first channel' simply refers to a specific channel of the modulated signal that has been down-converted." Furthermore, the fact that some of the unasserted claims, *e.g.*, Claim 12, refers to a "second channel down-converted signal," indicates that "first channel" and "second channel" are simply two different channels, which are numbered to differentiate them from each other, and not necessarily channels that are limited to specific types of signals.

Therefore, for the reasons described above, the undersigned finds that the term should be construed according to its plain-and-ordinary meaning.

E. Term #5: "energy storage element"

Term	Plaintiff's Proposed Construction	Defendant's Proposed Construction
#5: "energy storage element" U.S. Patent No. 9,118,528, Claims 1, 8, 9, 18, 19, 26, 27, 36 Proposed by Plaintiff	"an element of an energy transfer system that stores non-negligible amounts of energy from an input electromagnetic signal"	"an element of a system that stores non-negligible amounts of energy from an input EM signal"

Judge Albright, the undersigned, and Judge Gilliland all previously construed this term as "an element of an energy transfer system that stores non-negligible amounts of energy from an input electromagnetic signal," which is Plaintiff's proposed construction. *Intel*, No. 6:20-cv-00108, ECF No. 75 at 4; *ParkerVision, Inc. v. Intel Corp.*, No. 6:20-cv-00562, ECF No. 75 at 2 (W.D. Tex. Oct. 22, 2021); *HiSense*, No. 6:20-cv-00870, ECF No. 51 at 5; *LG Elecs.*, No. 6:21-cv-00520, ECF No. 55 at 28.

The Federal Circuit subsequently construed "storage element" to mean "an element that stores nonnegligible amounts of energy from an input electromagnetic signal," which is Defendant's proposed construction. *ParkerVision, Inc. v. Vidal*, 88 F.4th 969, 977 (Fed. Cir. 2023).

The Parties' Positions:

Defendant contends that the PTAB and Federal Circuit already rejected Plaintiff's proposed construction for a similar term ("storage element") in another patent with an identical specification to the '528 Patent. Opening at 22. Defendant contends that the Federal Circuit's holding "applies with equal force here because the specifications of the two patents are identical, and there is no meaningful distinction between these two claim terms." *Id.*

Defendant contends that the Federal Circuit held that the 73:9–22 in the '528 Patent "clearly expresses and intent to define the term 'storage element.'" *Id.* at 23 (citing *Vidal*, 88 F.4th at 976). Defendant contends that Plaintiff "should not be permitted to force [Defendant]– and this Court–to relitigate issues that have already been decided." *Id.* (citing *Nestle USA, Inc. v. Steuben Foods, Inc.*, 884 F.3d 1350, 1352 (Fed. Cir. 2018)).

Defendant contends that Plaintiff

> attempts to re-characterize the patent's purported invention by limiting it to "energy sampling" or "energy transfer" systems as opposed to "***voltage*** sampling systems." Instead of distinguishing between "energy sampling" and "voltage sampling", however, the '528 Patent describes the alleged invention as down-converting an electromagnetic signal by sampling at an aliasing rate, and describes both energy transfer and under sampling systems as different embodiments covered by the same umbrella of aliasing rates.

Id. at 24 (citing '528 Patent at 2:2–4) (emphasis in Plaintiff's brief).

Defendant contends that the "structure of the specification further demonstrates that the patent covers undersampling and energy transfer systems." *Id.* More specifically, Defendant contends that the "Overview of the Invention" section is expressly organized around these two concepts.

Table of Contents

I. Introduction
1. General Terminology
1.1 Modulation
1.1.1 Amplitude Modulation
1.1.2 Frequency Modulation
1.1.3 Phase Modulation
1.2 Demodulation
2. Overview of the Invention
2.1 Aspects of the Invention
2.2 Down-Converting by Under-Sampling
2.2.1 Down-Converting to an Intermediate Frequency (IF) Signal
2.2.2 Direct-to-Data Down-Converting
2.2.3 Modulation Conversion
2.3 Down-Converting by Transferring Energy
2.3.1 Down-Converting to an Intermediate Frequency (IF) Signal
2.3.2 Direct-to-Data Down-Converting
2.3.3 Modulation Conversion
2.4 Determining the Aliasing rate

Id. at 24–25 (citing '528 Patent at 15:34–55 (annotations in Defendant's brief)). Defendant contends that Figure 45A depicts "a Venn diagram illustrating that 'under sampling" and "transferring energy' are two types of 'aliasing[.]'"

FIG. 45A

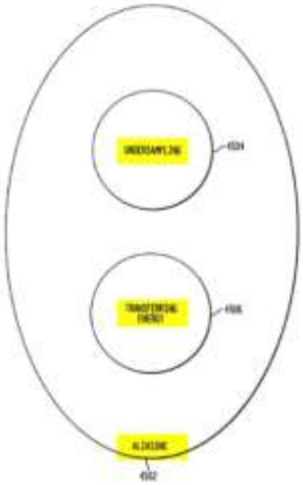

Id. at 25 (citing '528 Patent at Figure 45A (annotations in Defendant's brief)).

In its response, Plaintiff first contends that although the Federal Circuit construed the term according to Defendant's proposed construction, another appeal for an IPR relating to the same patent and claim term is currently pending before the Federal Circuit. Response at 13.

Plaintiff contends that the intrinsic evidence supports the Court's prior construction, namely, that the specification "*expressly* distinguishes the claimed 'storage' module from a 'holding' module," in order to "readily distinguish between the capacitors of the two systems[.]" *Id.* at 14 (citing '528 Patent at 72:55–74:35) (emphasis in Plaintiff's brief); *see also id.* at 14–16, 18–19. Plaintiff also contends that that the patentees did not act as their own lexicographer, but rather that the alleged lexicographical statement "allows a POSITA to identify whether a *system* is an energy transfer system or a sample-and-hold system based on what *component* (capacitor) is being used in that system." *Id.* at 17 (emphases in Plaintiff's brief). Plaintiff contends that "like other defendants before it, [Defendant] does *not* dispute that a 'storage' module is a module found only in an energy transfer system." *Id.* (emphasis in Plaintiff's brief).

Plaintiff contends that Defendant's proposed construction is technically and legally wrong. *Id.* More specifically, Plaintiff contends that Defendant's proposed construction would "cover any system in the world that stored non-negligible amounts of energy." *Id.* at 18. Plaintiff contends that is incorrect because there are only two systems disclosed in the patent—energy transfer and sample-and-hold—and because a "holding" element is only used in the latter, "then a 'storage' element must necessarily be 'an element *of an energy transfer system*.'" *Id.* (emphasis in Plaintiff's brief).

In its reply, Defendant contends that the Federal Circuit concluded that the patentees acted as their own lexicographer. *Id.* (citing *Vidal*, 88 F.4th at 976). Defendant contends that the "same lexicographic passage that the Federal Circuit held defines the term 'storage element' appears verbatim in the '528 Patent." *Id.* at 9 (comparing '551 Patent at 66:55–57 with '528 Patent at 73:20–22). Defendant contends that despite the fact that the Federal Circuit's holding is binding precedent, Plaintiff "nevertheless suggests that the Court should ignore–indeed, defy–the Federal

Circuit's decision because [Plaintiff] has another pending appeal involving the same claim term." *Id.*

Defendant contends that Plaintiff's proposed construction improperly limits the claim term to an embodiment. *Id.* at 10 (citing *Sisvel Int'l v. Sierra Wireless, Inc.*, 81 F.4th 1231, 1236 (Fed. Cir. 2023)). Defendant contends that Plaintiff's proposed construction improperly "attempts to read an entire system into a term that refers only to a component of that system." *Id.* (citing *Vidal*, 88 F.4th at 977).

Defendant contends that "of an energy transfer system" in Plaintiff's proposed construction does not provide any clarity to the claim because it "could contain any number of additional limitations that would not be immediately clear from the disclosure." *Id.*

In its sur-reply, Plaintiff contends that

> Although the Federal Circuit held that "a 'storage element' is 'an element of a system that stores non-negligible amounts of energy from an input EM signal'" in an appeal related to IPR2020, [Plaintiff] reiterates that that another appeal in IPR2021-0990 relating to the same patent and claim term is currently pending before the Federal Circuit.

Sur-Reply at 8.

<u>The Undersigned's Analysis:</u>

After reviewing the parties' arguments and considering the applicable law, the undersigned agrees with Defendant that "storage element" / "energy storage element" should be construed as "an element of a system that stores non-negligible amounts of energy from an input electromagnetic signal."

The Federal Circuit held the patentees acted as their own lexicographer. *Vidal*, 88 F.4th at 976–77. The Federal Circuit analyzed the following paragraph from the '551 Patent:

> FIG. 82A illustrates an exemplary energy transfer system 8202 for down-converting an input EM signal 8204. The energy transfer system 8202 includes a switching module 8206 and a storage module illustrated as a storage capacitance 8208. The terms storage module and storage capacitance, as used herein, are distinguishable from the terms holding module and holding capacitance, respectively. Holding modules and holding capacitances, as used above, identify systems that store negligible amounts of energy from an under-sampled input EM signal with the intent of "holding" a voltage value. Storage modules and storage capacitances, on the other hand, refer to systems that store non-negligible amounts of energy from an input EM signal.

Id., '551 Patent at 66:55–67. This paragraph also appears verbatim in the '528 Patent. '528 Patent at 73:9–21. Furthermore, both the '528 Patent and the '817 Patent incorporate the '551 Patent by reference. '528 Patent at 1:30–34, '817 Patent at 33:9–12 (incorporating by reference to the application number 09/176,022).

Because the Federal Circuit concluded that the patentees acted as their own lexicographer and that "storage element" should be construed as "an element of a system that stores non-negligible amounts of energy from an input EM signal" based on a paragraph in the '551 Patent, which is incorporated into both the '528 and '817 Patents, the Federal Circuit's determinations are binding in this case. *Kinetic Concepts, Inc. v. Smith & Nephew, Inc.*, 688 F.3d 1342, 1363 (Fed. Cir. 2012) ("Thus, we have already construed the claims to include this limitation and that legal conclusion was binding on the district court and is binding on this panel.").

For that same reason, the undersigned disagrees with Plaintiff that a pending Federal Circuit decision regarding the same term for same patent (for IPR2021-0990) changes whether the Circuit's prior conclusion is binding. Rather, the holding in *Kinetic Concepts* is that the Federal Circuit's holding in one case is binding upon district courts and future Federal Circuit panels. *Id.* And Plaintiff did not provide any reasons why the Federal Circuit's holding in *Vidal* should not apply in this case.

Therefore, for the reasons described above, the undersigned concludes that the recommended construction for "storage element" / "energy storage element" should be "an element of a system that stores non-negligible amounts of energy from an input electromagnetic signal."[3]

F. Term #6: "the energy discharged during any given discharge cycle is not completely discharged"

Term	Plaintiff's Proposed Construction	Defendant's Proposed Construction
#6: "the energy discharged during any given discharge cycle is not completely discharged" U.S. Patent No. 9,118,528, Claims 9, 27 Proposed by Plaintiff	Plain-and-ordinary meaning wherein the plain-and-ordinary meaning is "the energy that could potentially be discharged during any given discharge cycle is not completely discharged"	No construction necessary/ plain-and-ordinary meaning

Judge Albright previously construed this term as not indefinite, plain-and-ordinary meaning, wherein the plain-and-ordinary meaning is "the energy that could potentially be discharged during any given discharge cycle is not completely discharged." *Intel*, No. 6:20-cv-00108, ECF No. 75 at 7. Judge Gilliland construed this term as not indefinite, plain-and-ordinary meaning. *LG Elecs.*, No. 6:21-cv-00520, ECF No. 55 at 42.

[3] During the hearing, the undersigned asked the parties if they anticipated that they might have difficulty applying the Circuit's construction in *Vidal*, which is the undersigned's recommended construction, given that the Circuit's construction does not provide the necessary context of the system, *e.g.*, energy-transfer system or sample-and-hold system, that would help a POSITA determine whether the system contains a "storage module" or an "holding module." Hearing Tr. (Rough) at 2:12–3:24. The parties indicated that they did not believe, at that moment, that there would be any difficulties applying that construction. *Id.* at 3:25–8:6.

The Parties' Positions:

Defendant contends that there is "no basis in the intrinsic or extrinsic evidence" to add "potentially," so it should be rejected. Opening at 27.

Defendant contends that the specification describes "the amount of energy that will be discharged as modeled by the RC-response of the circuit. It is not some hypothetical amount that 'could potentially be discharged.'" *Id.* (citing '528 Patent at 7:25–39). Defendant contends that "nothing in the claims or the specification of the '528 Patent refer to the amount of energy that could 'potentially' be discharged[.]" *Id.* Defendant contends that "no definition is provided to provide any boundaries around the term 'potentially' as it is used in [Plaintiff's] construction." *Id.* at 27–28.

Defendant contends that Plaintiff " might now wish it had written the claims differently, but that it would be incorrect to construe the claims as [Plaintiff] now proposes." *Id.* at 28 (citing cases).

In its response, Plaintiff contends that in the prior *Intel* case, the Court provided additional clarification as recited in Plaintiff's proposed construction. Response at 20 (citing *Intel*, No. 6:20-cv-00108, ECF No. 75 at 4)).

With respect to Defendant's argument that Plaintiff's proposed construction rewrites the claim term, Plaintiff contends that Defendant "fails to analyze the term in the context of the full claim language and in view of the specification." *Id.* More specifically, Plaintiff contends that Figure 82B depicts the circuit claimed in Claim 9. *Id.*

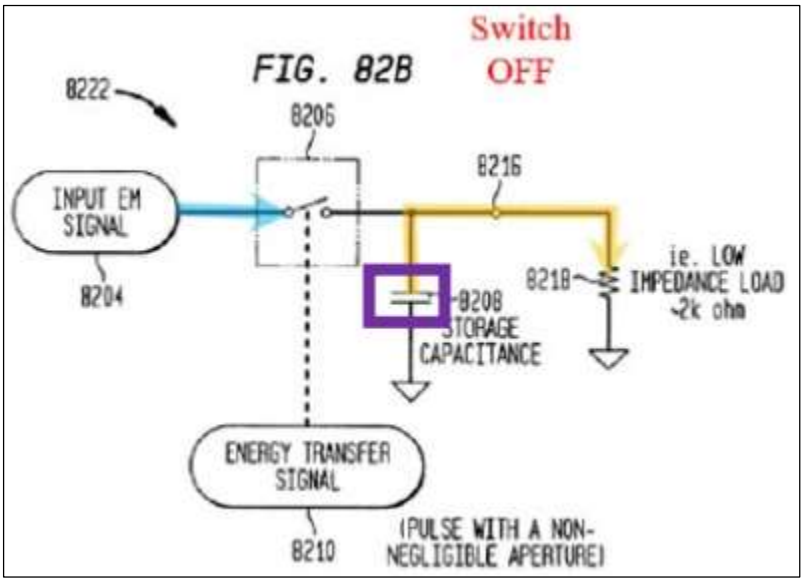

Id. (citing '528 Patent at Figure 82B (annotations in Plaintiff's brief)). Plaintiff contends that Claim 8 recites that "a portion of the transferred energy is discharged during the discharging part of the cycle for each respective switching device when the switching device is off," and Claim 9 further recites: "for each respective storage element, the energy discharged during any given discharge cycle is not completely discharged, with the remaining undischarged energy from the given discharge cycle becoming an initial condition for the next charging cycle." *Id.*

Plaintiff contends that the specification "discusses that when the storage element (capacitor) is not completely discharged, the energy remaining in the storage element provides the initial condition for the next charging (acquisition) cycle." *Id.* at 20–21 (citing '528 Patent at 147:25–39). Given that disclosure, Plaintiff contends that:

> In context, the term "the energy discharged during any given discharge cycle is not completely discharged" simply means that out of all of the energy stored in the storage element available for discharge (the energy that could potentially be discharged), not all of the energy is discharged during any given discharge cycle. In other words, there is some energy left in the storage element after a discharge cycle.

Response at 21. Plaintiff contends that this disclosure is consistent with the claim language's requirement that the "the *remaining undischarged energy* from the given discharge cycle becoming an initial condition for the next charging cycle[.]" *Id.* (emphasis in Plaintiff's brief).

In its reply, Defendant contends that Plaintiff "fails to address the actual dispute between the parties." Reply at 11. Defendant contends that while the parties agree the term should be given its plain-and-ordinary meaning, Plaintiff "never explains ***why*** the supposed plain and ordinary meaning of the term requires the addition of the word 'potentially' to the claim language—that is the actual dispute between the parties." *Id.* at 11–12 (emphasis in Defendant's brief).

Defendant contends that Plaintiff does not explain "how the addition of the term 'potentially' is required to effectuate the plain meaning" of the claim language. *Id.* at 12.

Defendant contends that the specification is "clear in describing how, and how much energy is discharged during a given discharge cycle." *Id.* Defendant contends that, by contrast, there is "no question in the '177 Patent how much energy could 'potentially' be discharged[.]" *Id.*

Defendant contends that the Court should reject Plaintiff's attempt to rewrite the claim. *Id.* (citing cases).

In its sur-reply, Plaintiff contends that Defendant "advances no new arguments for this term in its reply brief." Sur-Reply at 9. With respect to Defendant's argument that Plaintiff's proposed construction rewrites the claim, Plaintiff contends that its proposed construction does not rewrite anything, rather it "provides additional clarification regarding the plain-and-ordinary meaning of the term." *Id.*

Plaintiff contends that its proposed construction includes "that could potentially" "to clarify for a jury that out of all of the energy stored in the storage element available for discharge (the

energy that could potentially be discharged), not all of the energy is discharged during any given discharge cycle." *Id.*

The Undersigned's Analysis:

After reviewing the parties' arguments and considering the applicable law, the undersigned adopts Plaintiff's proposed construction of plain-and-ordinary meaning wherein the plain-and-ordinary meaning is "the energy that could potentially be discharged during any given discharge cycle is not completely discharged" for the reasons that follow. ***First***, with respect to the first part of the construction, the "heavy presumption" is that terms should be construed according to their plain-and-ordinary meaning. *Azure Networks*, 771 F.3d at 1347.

Second, neither party alleges lexicography or disclaimer, which are the only two exceptions to the general rule that a term should be construed as having its plain-and-ordinary meaning. *Thorner*, 669 F.3d at 1365.

Third, the addition of "that could potentially be" in the undersigned's construction is not a correction, but rather is a clarification for the jury. *Sulzer Textil A.G. v. Picanol N.V.*, 358 F.3d 1356, 1366 (Fed. Cir. 2004) ("The district court simply must give the jury guidance that can be understood and given effect by the jury once it resolves the issues of fact which are in dispute."). Although the claim language is not necessarily a model of clarity for a lay jury to understand, the specification clearly describes what is being claimed in Claim 9. *Vitronics Corp. v. Conceptronic, Inc.*, 90 F.3d 1576, 1583 (Fed. Cir. 1996) ("Thus, the specification is always highly relevant to claim construction analysis. Usually it is dispositive; it is the single best guide to the meaning of a disputed term.").

Figure 82A depicts the operation of an exemplary storage element with a load to illustrate how the storage element discharges.

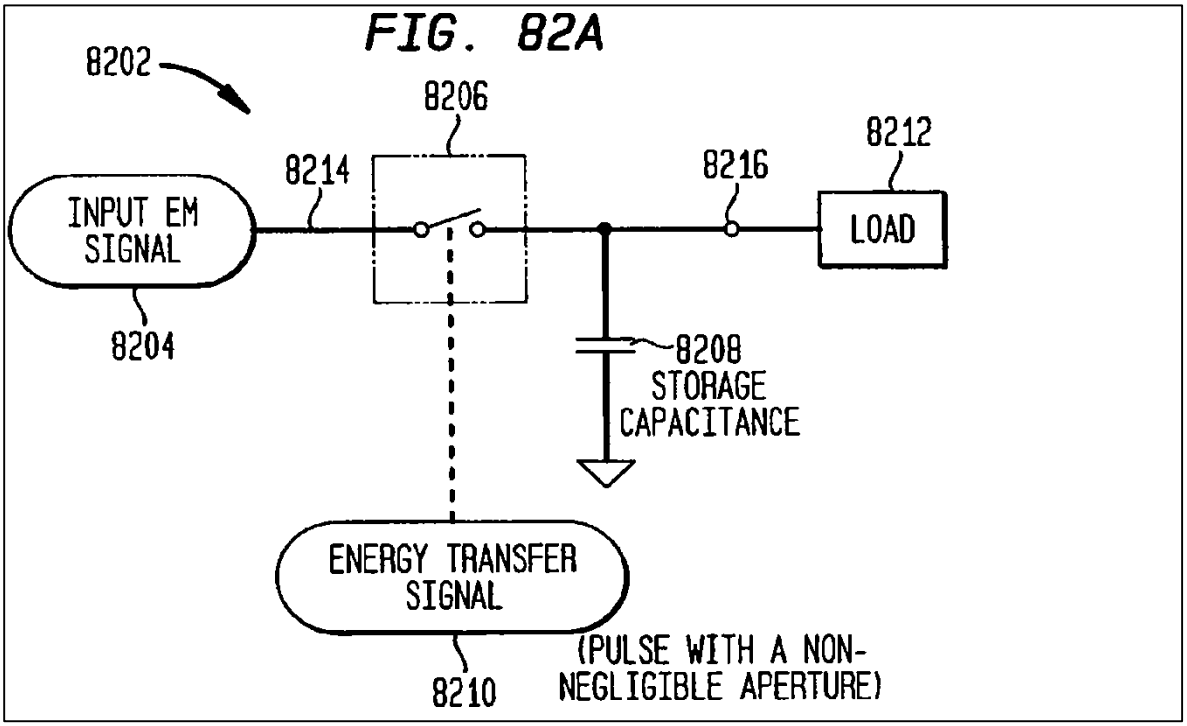

Before switch module 8206 opens, storage capacitance 8208 stores charge transferred from input EM signal 8204. '528 Patent at 73:41–43. When switch module 8206 is open, storage capacitance 8208 does not continue to charge, but can discharge through load 8212. *See, e.g.*, *id.* at 73:54–60. As such, the total amount of charge stored on storage capacitance 8208 that could be potentially discharged through load 8212 is the amount of charge stored on storage capacitance 8208 the instant switch module 8206 opens. If switch module 8206 remains open for a long time, storage capacitance 8208 will fully discharge such that the amount of charge stored on it will be zero. But if switch module 8206 closes before storage capacitance 8206 is fully discharged, the remaining charge on storage capacitance 8206 forms the initial condition—or starting point—for the next charging (or discharging) cycle.

The claim language mirrors this description. For example, the relevant portion of Claim 8 recites

> said portion of energy that is distinguishable from noise is [1] transferred to the respective storage element when the switch is on during the charging cycle, and [2] a portion of the transferred energy is discharged during the discharging part of the cycle for each respective switching device when the switching device is off.

'528 Patent, Claim 8 (annotations added). The phrase corresponding to the first annotation describes that a storage element, *e.g.*, storage capacitance 8208, charges during the charging cycle, *i.e.*, when switch module 8206 is closed. The phrase corresponding to the second annotation describes that a storage element, *i.e.*, storage capacitance 8208, discharges during the discharging cycle, *e.g.*, when switch module 8206 is open.[4] Notably, however, Claim 8 does not require that either all or only some of the charge stored on the storage element must be discharged, but rather Claim 8 is broad enough to cover either situation.

The relevant portion of Claim 9 recites "wherein for each respective storage element, the energy discharged during any given discharge cycle is not completely discharged, with the remaining undischarged energy from the given discharge cycle becoming an initial condition for the next charging cycle." *Id.*, Claim 9. The phrase at the end of Claim 9 ("remaining undischarged energy from the given discharge cycle becoming an initial condition for the next charging cycle") indicates that only a portion of the charge that was stored on the storage element when the switch opened discharged during the discharge cycle. In other words, of the charge which was stored on the claimed storage element when the switch opened—which represents the total amount of energy that could potentially be discharged during any given discharge cycle—only a portion of that charge is discharged while the remainder is not. The remaining portion of undischarged energy at

[4] Although Claims 1 and 8 do not expressly specify a load impedance, for the storage element to discharge when the switch is open, the charge stored on the storage element must discharge through an impedance connected to the storage element.

the beginning of the charging cycle becomes the starting point, *i.e.*, the initial condition, for the charging cycle.

Furthermore, a POSITA, putting together the phrase at the beginning of the relevant portion of Claim 9 ("for each respective storage element") with the end of the relevant portion ("remaining undischarged energy from the given discharge cycle becoming an initial condition for the next charging cycle"), would understand that Claim 9 describes partially—and not completely—discharging the storage element.

Based on the language in Claims 8 and 9, and the disclosures in the specification, a POSITA would understand that the term "the energy discharged during any given discharge cycle is not completely discharged" describes the energy that is stored during the charging cycle, *i.e.*, the energy that could potentially be discharged during any given discharge cycle, is only partially discharged, *i.e.*, is not completely discharged.

Therefore, for the reasons described above, the undersigned recommends that the term should be construed as plain-and-ordinary meaning, wherein the plain-and-ordinary meaning is "the energy that could potentially be discharged during any given discharge cycle is not completely discharged."

Finally, the undersigned does not believe that judicial correction is necessary as a POSITA would understand that the claim term means what the undersigned's recommended construction is. But, even if judicial correction were required, the undersigned concludes that the elements required for judicial correction are present. A district court can only correct an error in a claim if "(1) the correction is not subject to reasonable debate based on consideration of the claim language and the specification and (2) the prosecution history does not suggest a different interpretation of the claims." *Novo Indus., L.P. v. Micro Molds Corp.*, 350 F.3d 1348, 1357 (Fed. Cir. 2003).

With respect to the first element, as explained above, the claim language and the specification support the undersigned's recommended construction to be the correct judicial correction. Furthermore, Defendant does not appear to identify any alternative meaning and/or provide any arguments that indicate there is a reasonable debate regarding the correct judicial correction. With respect to the second element, Defendant does not cite to anything in the prosecution history that suggests a different interpretation. As such, to the extent that the Court concludes that judicial correction is needed, the undersigned recommends that the Court adopt the undersigned's recommended construction as the correction for this term.

G. Term #7: "a second differential amplifier circuit that combines said down-converted quadrature- phase baseband signal portion with said down- converted differential quadrature-phase baseband signal portion and outputs a second channel down-converted differential quadrature- phase baseband signal"

Term	Plaintiff's Proposed Construction	Defendant's Proposed Construction
#7: "a second differential amplifier circuit that combines said down-converted quadrature- phase baseband signal portion with said down- converted differential quadrature-phase baseband signal portion and outputs a second channel down-converted differential quadrature- phase baseband signal" U.S. Patent No. 9,118,528, Claim 19 Proposed by Defendant	Plain-and-ordinary meaning	Indefinite

The Parties' Positions:

Defendant contends that "[t]his term is indefinite because it uses the term 'differential' in inconsistent and irreconcilable ways." Opening at 28. Defendant contends that the term "'differential' implies two different input signals, not one." *Id.* at 28–29 (citing '528 Patent at 67:54–57). But Defendant contends that Claims 1 and 19 inconsistently use the term "differential." *Id.* at 29. More specifically, Defendant contends that Claim 1 requires two capacitors to output in-phase and inverted in-phase baseband signals, which are then amplified by a differential amplifier, while Claim 19 requires third and fourth capacitors that output a "down-converted quadrature phase baseband signal" and a "down-converted ***differential*** quadrature-phase baseband signal, respectively." *Id.* (emphasis in Defendant's brief). Defendant contends that "the reference to the differential quadrature-phase baseband signal output by the fourth capacitor, at best, presumes that the signal output by the fourth capacitor has been differentially amplified[,]" which is illogical as that there would be no need for a separate differential amplification step in Limitation [f]. *Id.* at 29–30.

Defendant contends that Plaintiff "previously sought a construction that entirely rewrote 'said down-converted ***differential*** quadrature-phase baseband signal portion' to mean 'the said down-converted ***inverted*** quadrature phase baseband signal portion of the modulated carrier signal that is output by the fourth energy storage element'." *Id.* at 30 (citing *ParkerVision, Inc. v. Apple, Inc.*, No. 3:15-cv-1477, ECF No. 151 at 27 (M.D. Fla. Jul. 15, 2019)) (emphases in Defendant's brief). Defendant contends that while Plaintiff asserted that this change was merely to correct a typographic error, the court in the Middle District of Florida declined to do so. *Id.*

In its response, Plaintiff contends that Claims 1 and 19 describes using two sets of circuitry: one for outputting in-phase baseband signals portions of the modulated carrier signal and another

for outputting quadrature-phase baseband signals portions of the modulated carrier signal. Response at 22. Plaintiff contends that "the fourth energy storage element [in Claim 19[d]] was obviously intended to correspond to the second energy storage element [in Claim 1[d]], but with an 'inverted quadrature-phase' type portion instead of an 'inverted in-phase portion.' But an obvious typographical error substituted the word 'differential' for the word 'inverted[.]'" *Id.*

Plaintiff contends that "[t]he same typographical error (substituting 'differential' for 'inverted') persists with regard to the first and second differential amplifier circuit limitations." *Id.* at 23. More specifically, Plaintiff contends that "[t]he second differential amplifier circuit [in Claim 19[f]] was obviously intended to correspond to the first differential amplifier circuit [in Claim 1[f]], but with an 'inverted quadrature-phase' type portion instead of an 'inverted in-phase portion.'" *Id.*

Plaintiff also contends that the "proper interpretation" of Claim 19 corresponds to Figure 197.

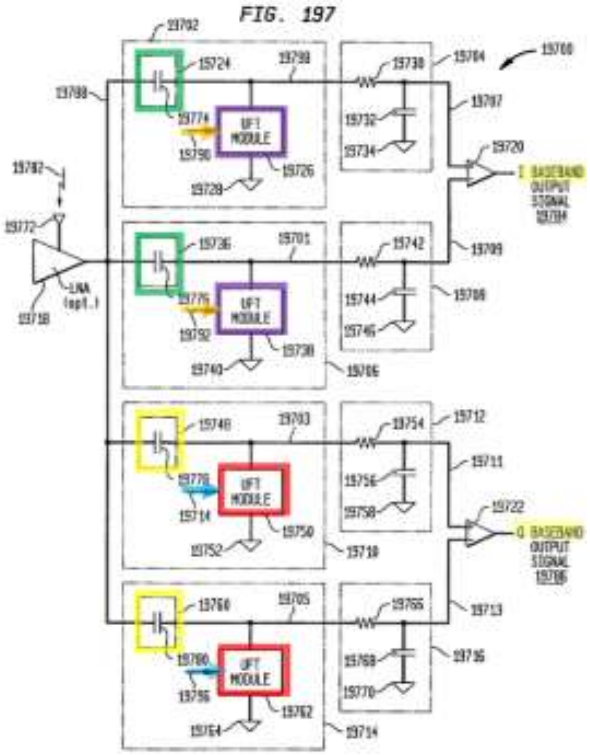

Id. at 24 (citing '528 Patent at Figure 197 (annotations in Plaintiff's brief)).. More specifically, Plaintiff contends that Figure 197 depicts that the circuit outputs quadrature-phase ("Q") baseband signal 19786. *Id.* Plaintiff contends that the specification describes that "[a]s a result of the opening and closing of this switch, which respectively couples and de-couples fourth storage module 19760 to and from fourth voltage reference 19764, *a down-converted signal, referred to as* <u>*inverted*</u> *Q output signal 19705*, results." *Id.* at 25 (quoting '528 Patent at 179:6–10) (emphasis in Plaintiff's brief). Plaintiff contends that the specification further describes that the "[s]econd differential amplifier 19722 receives filtered Q output signal 19711 at its non-inverting input and receives filtered <u>*inverted*</u> *Q output signal* 19713 at its inverting input." *Id.* (quoting '528 Patent at 179:34–36 (emphasis in Plaintiff's brief)).

Plaintiff contends that "[t]o the extent the Court deems it necessary to clarify the term, the Court has the authority to correct the term by replacing '*differential* quadrature-phase' with '*inverted* quadrature phase." *Id.* (citing *CBT Flint Partners, LLC v. Return Path, Inc.*, 654 F.3d 1353, 1358 (Fed. Cir. 2011)) (emphasis in Plaintiff's brief). Plaintiff contends that "[t]his correction is not subject to reasonable debate; it is the only reasonable interpretation of the term in view of the surrounding claim language and the specification." *Id.*

In its reply, Defendant contends that Plaintiff "does not address the finding in *ParkerVision, Inc. v. Apple, Inc.*, that this term is indefinite." Reply at 12 (citing No. 3:15-cv-1477-J-39JRK, 2019 WL 4385673, at *11-12). Defendant contends that Plaintiff again asserts that "the inconsistent use of the word 'differential'" as an "obvious" typographical error. *Id.* at 13. Defendant contends that Plaintiff did not ask for a certificate of correction because the claim language did not contain "a mistake of a clerical or typographical nature, or of minor character." *Id.*

Defendant contends that the "fact that [Plaintiff] advocates that this Court should simply replace the word 'differential' with 'inverted' demonstrates that it also understands that the claim, as written, is internally inconsistent and does not make sense." *Id.* Defendant contends that Plaintiff "cannot correct its drafting errors through claim construction." *Id.* (citing cases).

Defendant contends that a POSITA would not "recognize that '[t]he second and fourth energy storage elements were obviously intended to have this same identity and correspondence.'" *Id.* at 14.

In its sur-reply, Plaintiff contends that Defendant "feigns ignorance of the term's meaning, continuing to read the claim language in the abstract and isolated from the specification" and "makes *no* mention of the specification at all." Sur-Reply at 10 (emphasis in Plaintiff's brief). Plaintiff contends that

> Claim 19 essentially doubles the subject matter of claim 1, from which it depends: where claim 1 discloses first and second switches, controls signals, and energy storage elements for outputting *in-phase* baseband signal portions of the modulated carrier signal, dependent claim 19 adds corresponding third and fourth switches, controls signals, and energy storage elements for outputting *quadrature-phase* baseband signal portions of the modulated carrier signal.

Id. (emphases in Plaintiff's brief).

With respect to the claim language, Plaintiff contends that "the language of claim 19 aligns with the description of an I/Q modulation receiver as depicted in *e.g.*, Figure 197 of the '528 patent." *Id.* Plaintiff contends that the specification "clearly explains that a second differential amplifier circuit receives and combines a quadrature-phase baseband signal with an inverted quadrature-phase baseband signal." *Id.* Plaintiff contends that Defendant "simply disregards the relevant portions of the intrinsic record." *Id.*

Plaintiff contends that Defendant does not provided any substantive response. *Id.* More specifically, Plaintiff contends that Defendant "simply reiterates the Court's findings in *ParkerVision, Inc. v. Apple, Inc.*, that this term is indefinite." *Id.*

Plaintiff contends that Defendant "does not argue that the term is subject to reasonable debate, nor identify another reasonable interpretation[,]" but rather that "the *only* reasonable interpretation of the term in view of the surrounding claim language and the specification" is to substitute "differential" for "inverted." *Id.* (emphasis in Plaintiff's brief).

The Undersigned's Analysis:

After reviewing the parties' arguments and considering the applicable law, the undersigned concludes that the term is not indefinite, that judicial correction is not appropriate, and that the term should be construed according to its plain-and-ordinary meaning.

With respect to whether the term is indefinite, the undersigned concludes that Defendant has not provided clear-and-convincing evidence that the term is indefinite. Defendant's primary argument that the term is indefinite is that Judge Davis in the Middle District of Florida found that the term is indefinite and that the principle of *stare decisis* should apply. Reply at 8.

As a preliminary matter, Judge Albright is not bound by Judge Davis's decision, nor does Defendant argue that he is.

With respect to Judge Davis's conclusion that the term is indefinite, the undersigned disagrees for at least the following reasons. ***First***, Judge Davis appeared to conclude that the claim term was only indefinite because the required judicial correction would replace "some, but not all, 'differential' terms with 'inverted' [which] is not a minor correction that is obvious and free from reasonable debate or evident from the prosecution history. Rather, the record supports that

Plaintiff's proposed construction would alter one type of signal for another type of signal." Opening, Ex. C at 28. Based on that, Judge Davis concluded that "[i]n light of Plaintiff's use of the term 'differential' in inconsistent and nonsensical ways, the Court finds that claims 10 and 19 are invalid for indefiniteness." *Id.*

But whether a term can be judicially corrected or not has no bearing on whether it is indefinite. The legal test for the former is whether "(1) the correction is not subject to reasonable debate based on consideration of the claim language and the specification and (2) the prosecution history does not suggest a different interpretation of the claims," while the legal test for the latter is whether the claim "viewed in light of the specification and prosecution history, inform those skilled in the art about the scope of the invention with reasonable certainty." *Novo Indus.*, 350 F.3d at 1357, *Nautilus*, 572 U.S. at 910. Given that the legal tests for judicial correction and indefiniteness are entirely unrelated, and do not appear to overlap in any way, it therefore follows that a court's conclusion that a term is not eligible for judicial correction does not concomitantly mean that the term is indefinite.

Second, apart from that argument, neither the Defendant in this case, or the defendants in the Middle District of Florida, appear to provide arguments as to why the term is indefinite. Reply at 8, Opening, Ex. C at 26–27. Defendant's failure to provide any argument why the term is indefinite indicate that Defendant has failed to carry its clear and convincing evidence burden.

Furthermore, after reviewing the term in question, the undersigned concludes that a POSITA would understand the scope of the term with "reasonable certainty." *Nautilus*, 572 U.S. at 910. More specifically, there does not appear to be any dispute as to the meaning of "differential," and the undersigned agrees that the meaning of "differential" is a well-understood

term. Because there is no dispute about the meaning of "differential," the undersigned concludes that a POSITA would understand the scope of the term with "reasonable certainty."

Therefore, for these reasons, the undersigned concludes that Defendant has not provided clear and convincing evidence that this term is indefinite.

With respect to the issue of judicial correction, the undersigned concludes that judicial correction is not appropriate in this case for at least the following reasons. ***First***, the undersigned is not persuaded that the term contains an obvious error. *Vifor (Int'l) AG v. Mylan Lab'ys Ltd.*, No. CV 19-13955 (FLW), 2021 WL 1608908, *3 (D.N.J. Apr. 26, 2021) ("if the Court determines that the Claim makes sense as written, then the error is not obvious and judicial correction is inappropriate.") (citing *Grp. One, Ltd. v. Hallmark Cards, Inc.*, 407 F.3d 1297, 1303 (Fed. Cir. 2005)). Here, it is unclear that there is an obvious error. For example, the alleged error ("differential" was inadvertently substituted for "inverted") is not an typographical error, *e.g.*, missing a word or a grammatical error, an error that was introduced during prosecution, or an error by the PTO, all of which may be more "obvious" than the alleged error. Furthermore, given that the alleged error occurs in Limitations [d], [e], and [f]—and not just one limitation—makes it less likely that the error is obvious. In other words, given that the alleged error occurs in multiple limitations, this indicates that it is less likely to be an error and more likely that the patentees intended to claim this particular configuration.

Second, although it is a close call, the undersigned concludes that replacing "differential quadrature-phase baseband signal" with "inverted quadrature-phase baseband signal" is subject to reasonable debate. In particular, because the two signals are completely different signals, the undersigned concludes that there is a reasonable debate which signal is the correct signal. Furthermore, the undersigned is mindful that judicially correcting could effectively limit Claim 19

to the embodiment depicted in Figure 195, which the undersigned is reluctant to do given that there does not appear to be "words or expression of manifest exclusion or restriction." *Pulse Elecs., Inc. v. U.D. Elec. Corp.*, 860 Fed. App'x 735, 737 (Fed. Cir. 2021) ("Embodiments in the specification—even if there is only one embodiment—cannot limit the scope of the claims absent the patentee's words or expression of manifest exclusion or restriction.") (quotation omitted).

Finally, given that it is questionable whether an error actually exists, the undersigned opts "construe the claim as written, not as the patentees wish they had written it" instead of judicially correcting the claim language. *Chef Am., Inc. v. Lamb-Weston, Inc.*, 358 F.3d 1371, 1374 (Fed. Cir. 2004); *see also Cent. Admixture Pharmacy Servs., Inc. v. Advanced Cardiac Sols., P.C.*, 482 F.3d 1347, 1355 (Fed. Cir. 2007) ("Claims mean precisely what they say.").

Construction: Because the "heavy presumption" is that terms should be construed according to their plain-and-ordinary meaning and because neither party allege lexicography or disclaimer, which are the only two exceptions to the general rule that a term should be construed as having its plain-and-ordinary meaning, the undersigned concludes that the term should be construed as having its plain-and-ordinary meaning. *Azure Networks*, 771 F.3d at 1347; *Thorner*, 669 F.3d at 1365.

Therefore, for the reasons described above, the undersigned recommends that the term is not indefinite, that judicial correction is not appropriate, and that the term should be construed according to its plain-and-ordinary meaning.

IV. CONCLUSION

In conclusion, for the reasons described herein, the undersigned recommends adopting the below constructions as the Court's constructions.

SIGNED this 21st day of October, 2024.

JOSHUA J. YI, Ph.D.

Term	Plaintiff's Proposed Construction	Defendant's Proposed Construction	Special Master's Recommended Construction
#1: "controlling a charging and discharging cycle" U.S. Patent No. 7,496,342, Claim 18 Proposed by Defendant	Plain-and-ordinary meaning	"controlling a cycle of charging and then discharging each capacitor"	Plain-and-ordinary meaning
#2: "switching device" / "switch" U.S. Patent No. 7,496,342, Claims 18, 19, 20, 21; U.S. Patent No. 9,118,528, Claims 1, 5, 8, 17, 18, 19, 23, 26, 35, 36 Proposed by Plaintiff	Plain-and-ordinary meaning wherein the plain-and-ordinary meaning is "an electronic device for opening and closing a circuit as dictated by an independent control input"	No construction necessary / Plain and ordinary meaning, or if construction is necessary, an electronic device which opens and closes to break or complete an electrical path in a circuit	"an electronic device for opening and closing a circuit"

Term	Plaintiff's Proposed Construction	Defendant's Proposed Construction	Special Master's Recommended Construction
#3: "matched filtering/correlating module" U.S. Patent No. 7,865,177, Claim 14 Proposed by Plaintiff	"linear time-variant circuitry that samples a modulated RF (radio frequency) carrier signal at an aliasing rate using a switch with an independent control input driven by a control signal with a non-negligible, periodic aperture, such that the samples, having non-negligible available energy, are accumulated and transferred to a load while the switch is closed and discharged through the load while the switch is open, thereby transferring available real power from the modulated RF carrier signal to the load and producing a downconverted signal with enhanced signal-to-noise power ratio"	No construction necessary / plain-and-ordinary meaning	Plain-and-ordinary meaning wherein the module samples an input signal at an aliasing rate.
#4: "first channel down-converted signal" U.S. Patent No. 7,865,177, Claim 14 Proposed by Defendant	Plain-and-ordinary meaning	"An I-phase down-converted signal or a Q-phase down-converted signal"	Plain-and-ordinary meaning

Term	Plaintiff's Proposed Construction	Defendant's Proposed Construction	Special Master's Recommended Construction
#5: "energy storage element" U.S. Patent No. 9,118,528, Claims 1, 8, 9, 18, 19, 26, 27, 36 Proposed by Plaintiff	"an element of an energy transfer system that stores non-negligible amounts of energy from an input electromagnetic signal"	"an element of a system that stores non-negligible amounts of energy from an input EM signal"	"an element of a system that stores non-negligible amounts of energy from an input electromagnetic signal"
#6: "the energy discharged during any given discharge cycle is not completely discharged" U.S. Patent No. 9,118,528, Claims 9, 27 Proposed by Plaintiff	Plain-and-ordinary meaning wherein the plain-and-ordinary meaning is "the energy that could potentially be discharged during any given discharge cycle is not completely discharged"	No construction necessary/ plain-and-ordinary meaning	Plain-and-ordinary meaning wherein the plain-and-ordinary meaning is "the energy that could potentially be discharged during any given discharge cycle is not completely discharged"

Term	Plaintiff's Proposed Construction	Defendant's Proposed Construction	Special Master's Recommended Construction
#7: "a second differential amplifier circuit that combines said down- converted quadrature- phase baseband signal portion with said down-converted differential quadrature-phase baseband signal portion and outputs a second channel down-converted differential quadrature- phase baseband signal" U.S. Patent No. 9,118,528, Claim 19 Proposed by Defendant	Plain-and-ordinary meaning	Indefinite	Not indefinite. Judicial correction is not appropriate. Plain-and-ordinary meaning.