US 20060026788A1

(19) United States

(12) Patent Application Publication

(10) Pub. No.: US 2006/0026788 A1

(43) Pub. Date: Feb. 9, 2006

Fischer et al.

(54) UPRIGHT VACUUM CLEANER INCORPORATING TELESCOPIC HANDLE AND WAND ASSEMBLY WITH ELECTRIFIED HOSE

(76) Inventors: **Richard J. Fischer**, Nicholasville, KY (US); **J. Erik Hitzelberger**, Danville, KY (US)

Correspondence Address:
KING & SCHICKLI, PLLC
247 NORTH BROADWAY
LEXINGTON, KY 40507 (US)

(21) Appl. No.: 11/196,171

(22) Filed: Aug. 3, 2005

Related U.S. Application Data

(60) Provisional application No. 60/599,698, filed on Aug. 6, 2004.

Publication Classification

(51) Int. Cl.
A47L 5/00 (2006.01)

(52) U.S. Cl. 15/334

(57) **ABSTRACT**

An upright vacuum cleaner is equipped with a hose and telescopic handle and wand assembly that are both electrified. In addition, the vacuum cleaner includes a powered cleaning tool attachment. The powered cleaning tool attachment includes (a) a headlight, (b) a rotary agitator and rotary agitator drive motor and/or (c) a booster fan and a booster fan drive motor. Each of these accessories of the tool attachment are powered through the hose and telescopic handle and wand assembly.

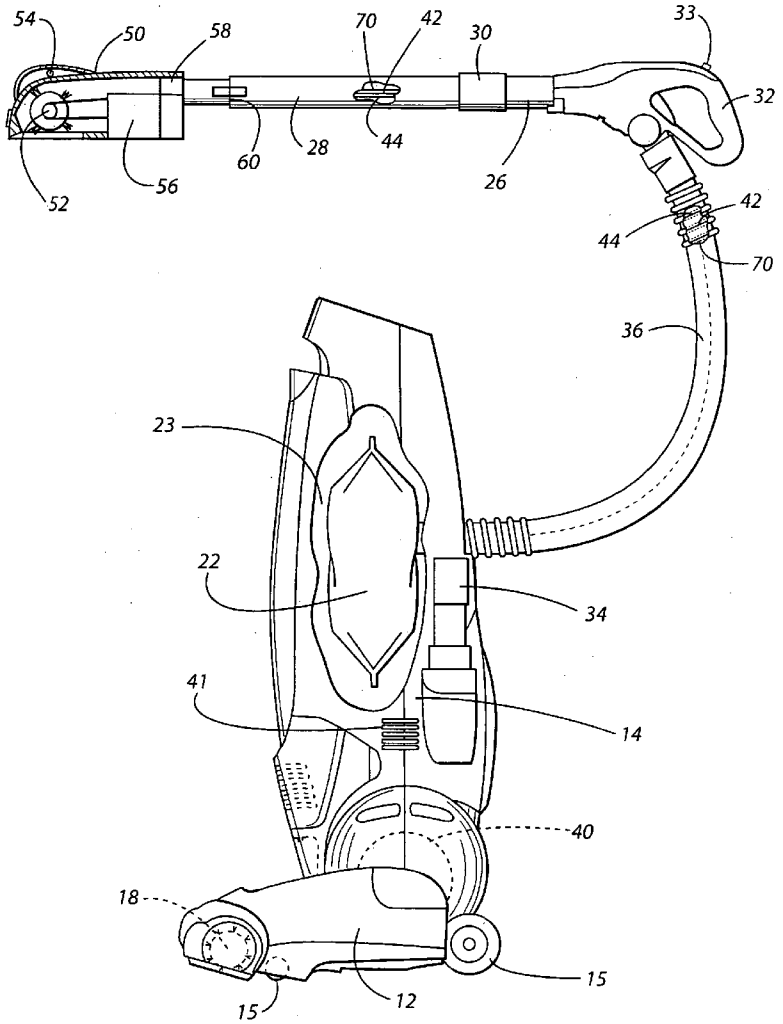

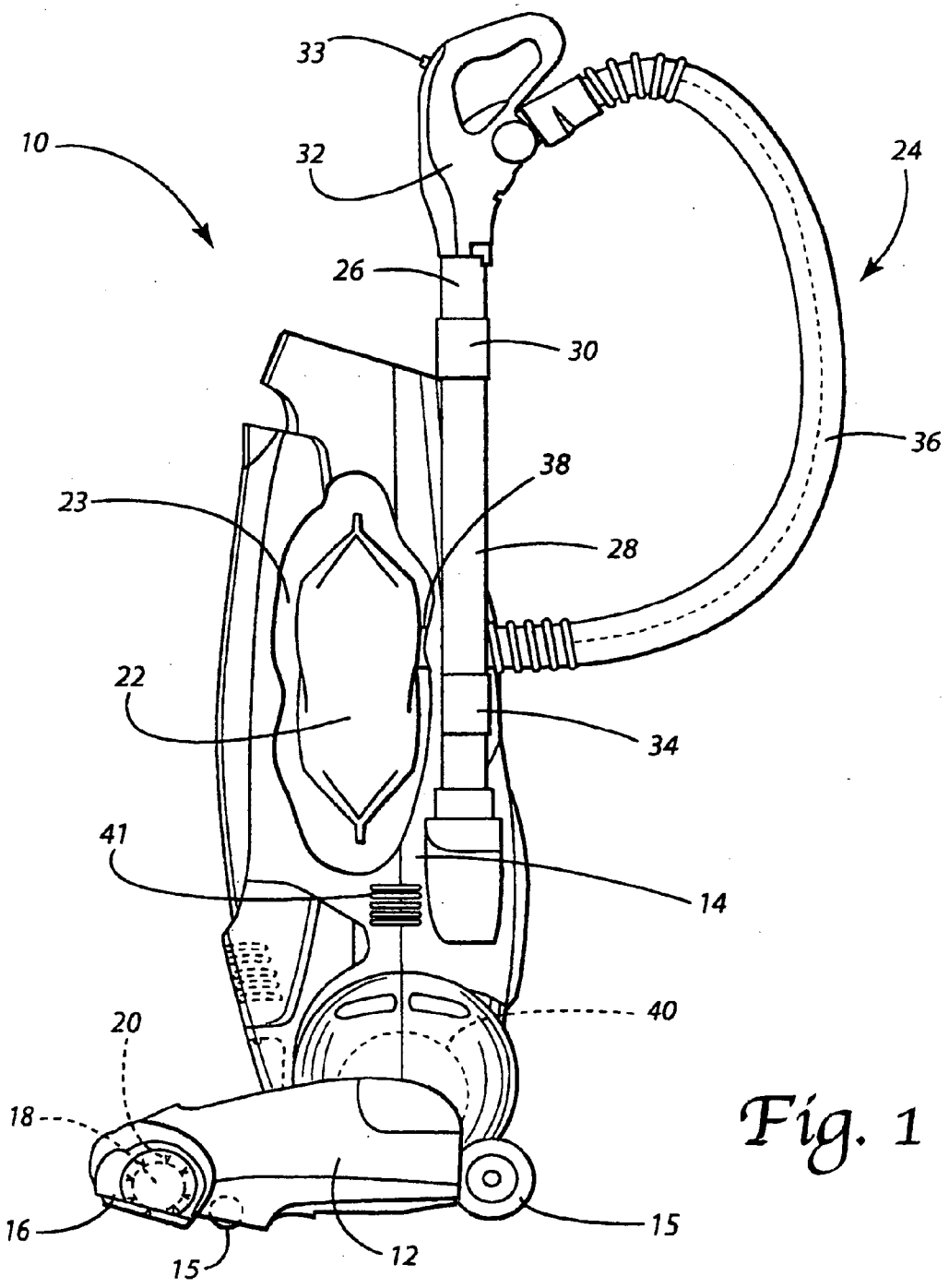

Fig. 1

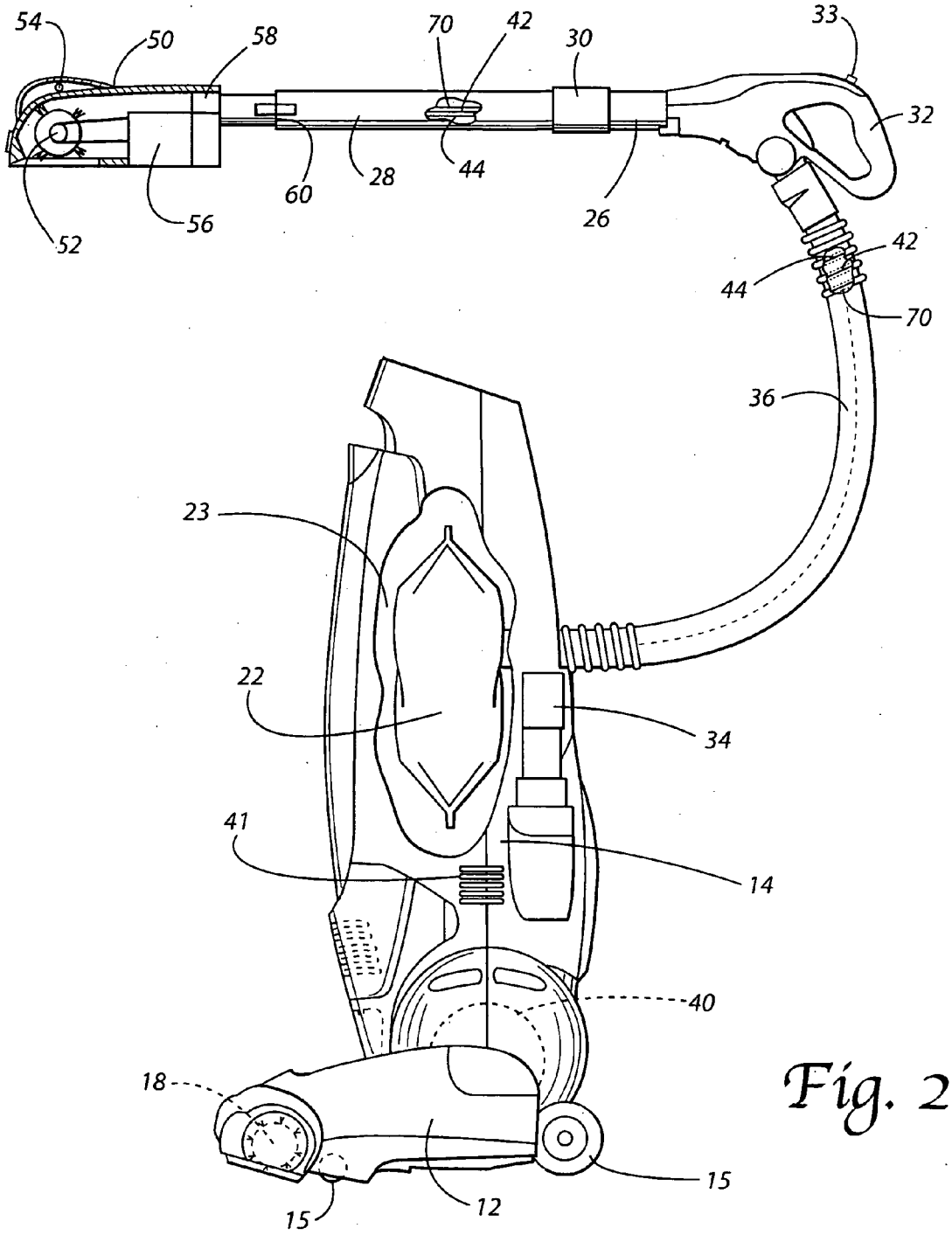
54
50
58
70
42
30
33
32
52
56
60
28
44
26
42
44
70
36
23
22
34
41
14
40
18
15
12
15

Fig. 2

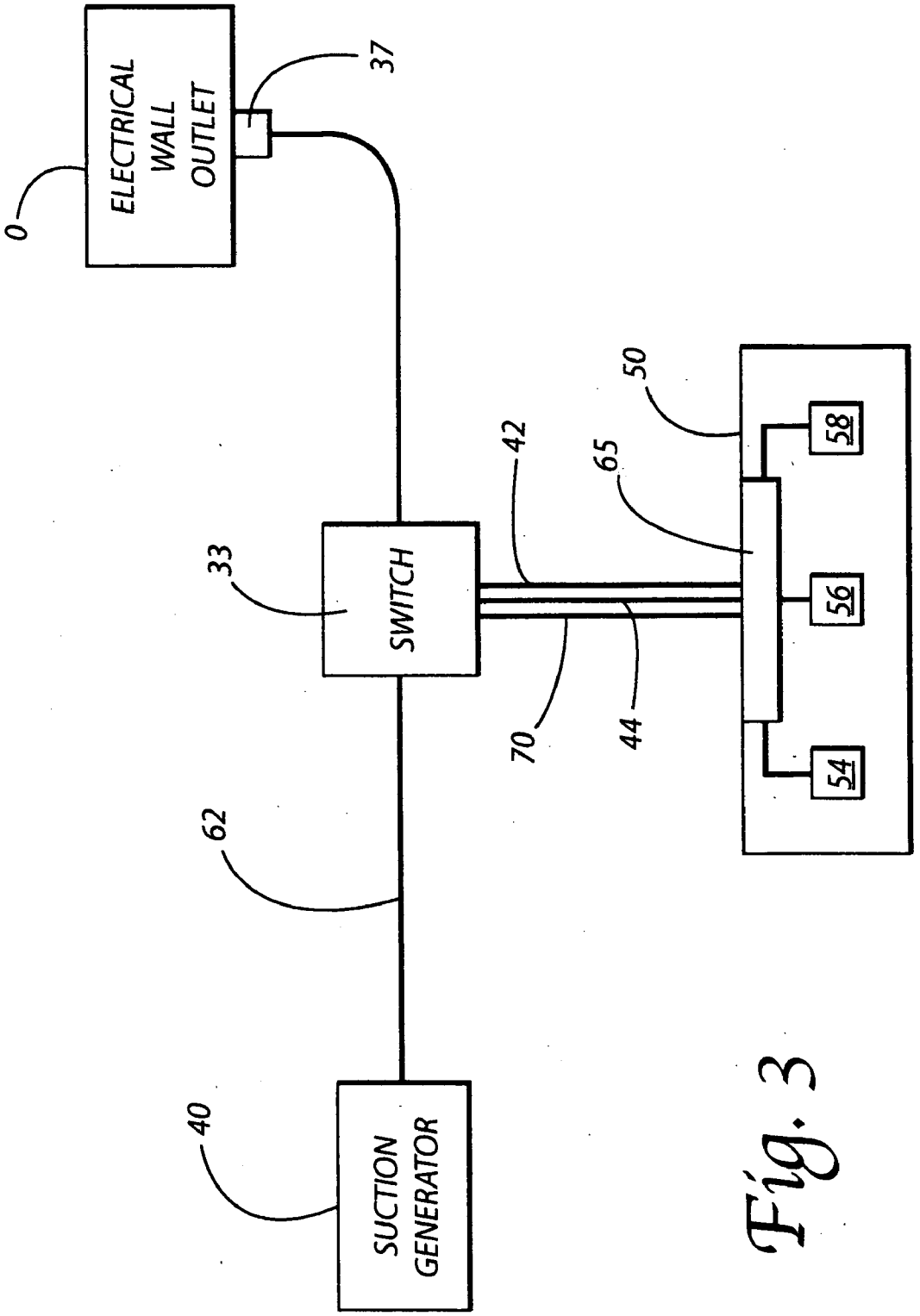
ELECTRICAL WALL OUTLET
0
37
SWITCH
33
62
SUCTION GENERATOR
40
42
44
70
65
50
58
56
54

Fig. 3

UPRIGHT VACUUM CLEANER INCORPORATING TELESCOPIC HANDLE AND WAND ASSEMBLY WITH ELECTRIFIED HOSE

[0001] This application claims the benefit of U.S. Provisional Patent Application Ser. No. 60/599,698 filed on 6 Aug. 2004.

TECHNICAL FIELD

[0002] The present invention relates generally to the floor care equipment field and, more particularly, to an upright vacuum cleaner equipped with an electrified hose and telescopic handle and wand assembly as well as a powered cleaning tool attachment.

BACKGROUND OF THE INVENTION

[0003] A vacuum cleaner is an electromechanical appliance utilized to effect the dry removal of dust, dirt and other small debris from carpets, rugs, fabrics or other surfaces in both domestic and industrial environments. In order to achieve the desired dirt and dust removal, a rotary agitator is provided to beat dirt and dust from the nap of the carpet and a pressure drop or vacuum is used to force air entrained with this dirt and dust into the nozzle of the vacuum cleaner. The particulate-laden air is then drawn through a bag-like filter, a dirt cup or a cyclonic separation chamber and filter combination which traps the dirt and dust, while substantially clean air is exhausted by an electrically operated fan that is driven by an on board motor. It is this fan and motor arrangement that generates the drop in air pressure necessary to provide the desired cleaning action. Thus, the fan and motor arrangement is commonly known as the vacuum or suction generator.

[0004] Upright vacuum cleaners are presently very popular with consumers. An upright vacuum cleaner comprises a nozzle assembly and canister assembly that are pivotally connected together. The nozzle assembly includes a suction inlet and a rotary agitator. The nozzle assembly and canister assembly glide across the floor on wheels so as to allow for ease of cleaning.

[0005] It is known in the art to provide upright vacuum cleaners with a hose and specialty tools to allow for above floor cleaning such as of furniture, upholstery or drapes or to allow cleaning in tight corners or areas where furniture or other impediments prevent the nozzle assembly from being moved across the floor to provide the desired cleaning. To date, the hose and wand assemblies on upright vacuum cleaners are not electrically powered and the cleaning tools for wands on an upright vacuum cleaner are simple brushes or crevice tools without electrically powered features or accessories. This limits both their cleaning power and usefulness.

[0006] The present invention addresses this problem by providing an upright vacuum cleaner with an electrified hose and wand assembly and a powered cleaning tool attachment including a motor driven rotary agitator, a headlight and/or a booster fan for additional cleaning power.

SUMMARY OF THE INVENTION

[0007] In accordance with the purposes of the present invention as described herein, an improved upright vacuum cleaner is provided. The upright vacuum cleaner includes a nozzle assembly having a suction inlet and a canister assembly pivotally connected to the nozzle assembly. Both a suction generator and a dirt collection vessel are carried on one of the canister assembly and the nozzle assembly. In addition, a telescopic handle and wand assembly is carried on one of the canister assembly and the nozzle assembly. The telescopic handle and wand assembly includes a first end in communication with the suction inlet and a second end in communication with the dirt collection vessel. A hose is provided between the second end of the handle and wand assembly and the dirt collection vessel. The hose and telescopic wand assembly include a pair of electrical conductors for supplying electric current to a distal end of the telescopic handle and wand assembly.

[0008] The telescopic handle and wand assembly includes a first section and a second section forming a telescoping air path. Further, the telescopic handle and wand assembly includes a control hand grip. One of the canister assembly and nozzle assembly includes a connector and the first end of the telescopic handle and wand assembly is releaseably held in that connector.

[0009] In accordance with an additional aspect of the present invention a powered cleaning tool attachment is provided for the upright vacuum cleaner. The powered cleaning tool attachment includes a rotary agitator and a rotary agitator drive motor, a headlight and/or a booster fan and booster fan drive motor. Further, the cleaning tool attachment includes a selector control switch which allows one to selectively energize any of the various electrical accessories provided on the attachment.

[0010] In the following description there is shown and described a preferred embodiment of this invention simply by way of illustration of one of the modes best suited to carry out the invention. As it will be realized, the invention is capable of other different embodiments and its several details are capable of modification in various, obvious aspects all without departing from the invention. Accordingly, the drawings and descriptions will be regarded as illustrative in nature and not as restrictive.

BRIEF DESCRIPTION OF THE DRAWING

[0011] The accompanying drawing incorporated in and forming a part of the specification, illustrates several aspects of the present invention, and together with the description serves to explain certain principles of the invention. In the drawing:

[0012] **FIG. 1** is a partially cutaway side elevational view of an upright vacuum cleaner of the present invention;

[0013] **FIG. 2** is a view similar to **FIG. 1** but illustrating the handle and wand assembly in a manual cleaning position and equipped with a powered cleaning tool attachment; and

[0014] **FIG. 3** is a schematical block diagram illustrating the electrical circuitry of the vacuum cleaner of the present invention.

[0015] Reference will now be made in detail to the present preferred embodiment of the invention, an example of which is illustrated in the accompanying drawings.

DETAILED DESCRIPTION OF THE INVENTION

[0016] As illustrated in **FIG. 1**, the present invention relates to an upright vacuum cleaner **10** including a housing

comprising both a nozzle assembly **12** and a canister assembly **14**. The canister assembly **14** is pivotally connected to the nozzle assembly **12**. The upright vacuum cleaner **10** rides over the floor surface being cleaned on wheels **15** carried on the housing.

[**0017**] The nozzle assembly **12** includes a suction inlet **16**. A rotary agitator **18** carried on the nozzle assembly **12** is mounted adjacent to or in the suction inlet **16**. The rotary agitator **18** includes bristle tufts **20**, brushes, wipers or the like to beat dirt and debris from the nap of an underlying carpet being cleaned as the agitator is rotated at high speeds with respect to that carpet and the nozzle assembly **12**.

[**0018**] The canister assembly **14** includes a dirt collection vessel **22** housed in a receiver or internal cavity **23**. In the illustrated embodiment the dirt collection vessel **22** is a dust bag of permeable filter material adapted to entrap dirt and debris while allowing the passage of clean air through the bag. In an alternative embodiment the dirt collection vessel **22** may take the form of a dirt cup and filter combination. Such a dirt cup may or may not provide for cyclonic air flow.

[**0019**] The canister assembly **14** also includes a telescopic handle and wand assembly generally designated by reference numeral **24**. The telescopic handle and wand assembly **24** includes first and second telescopic wand sections **26**, **28** connected together by a locking coupler **30** similar to the structure shown and described in U.S. Pat. No. 6,148,474 to Ohara et al. and owned by the assignee of the present invention. A control hand grip **32**, including a multiposition actuator switch **33**, is provided at the end of the wand section **26** opposite the coupler **30**. The end **60** of the wand section **28** opposite the coupler **30** is received in a connector **34** mounted to the rear of the canister assembly **14**. A flexible hose **36** extends from the control handle **32** to the inlet **38** connected to the dirt collection vessel **22**. A power cord **35** includes a plug **37** for connecting to a standard electrical wall outlet **0** and providing power for the vacuum cleaner (see also **FIG. 3**).

[**0020**] During standard floor cleaning operation, the rotary agitator **18** scrubs and beats dirt and debris from the nap of an underlying carpet being cleaned. A suction generator **40** draws air entrained with that dirt and debris through the suction inlet **16**, the connector **34**, the wand section **28**, the wand section **26**, the control handle **32**, the hose **36** and the inlet **38** into the dirt collection vessel **22**. The dirt and debris is captured in the dirt collection vessel **22** while the now relatively clean air is drawn over the motor of the suction generator **40** in order to provide cooling. That air is then exhausted through a final filter (not shown) and returned to the environment through the exhaust port **41**.

[**0021**] As illustrated in **FIG. 2** the telescopic handle and wand assembly **24** includes a second or distal end that is removable from the canister assembly **14** to allow manipulation and specialty cleaning. More specifically, the distal end of the wand section **28** is removable from the connector **34** by means of a releasable locking mechanism such as described in, for example, U.S. Provisional Patent Application Ser. No. 60/598,749 and U.S. Pat. No. 4,700,429 to Martin et al. owned by the assignee of the present invention. The telescopic sections **26**, **28** of the handle and wand assembly **24** may then be retracted or extended by operation of the locking coupler **30** to produce a wand of desired length. The handle and wand assembly **24** is then manipulated by the operator through the control handle **32**. In this mode of operation air including dirt and debris is drawn directly into the open distal end of the handle and wand assembly **24**. That air then travels through the wand section **28**, the wand section **26**, the control handle **32**, the hose **36** and the inlet **38** into the dirt collection vessel **22**. There the dirt becomes trapped and clean air then passes over the motor of the suction generator **40** before being exhausted through the final filter into the environment.

[**0022**] In accordance with the present invention, it should be appreciated that the hose **36** and the handle and wand assembly **24** are electrified; that is, include first and second conductors **42**, **44** for distributing current to a powered cleaning tool attachment **50** when it is attached to the free or second end **60** of the handle and wand assembly **24**. Such a powered cleaning tool attachment **50** may include various electrical accessories such as, for example, a rotary agitator **52** and associated drive motor **56**, a headlight **54** and/or a booster fan and booster fan drive motor **58** for greater cleaning efficiency. Any or all of these accessories receive electric current through the conductors **42**, **44** and are powered through the hose **36** and the handle and wand assembly **24**.

[**0023**] **FIG. 3** is a schematical illustration of the control circuit. The vacuum cleaner **10** is powered by electricity received from a standard electrical wall outlet **0**. More specifically, the plug **37** of the power cord **35** is plugged into the outlet **0**. Electricity runs through the power cord **35** to the actuator switch **33** which allows the operator to selectively energize and operate certain electrical systems or accessories of the vacuum cleaner. For example, in one position of the switch **33**, all electrical systems of the vacuum cleaner **10** are off. In another position, the motor of the suction generator **40** is energized through the power line **62**. In yet another position, electricity is directed by the actuator switch **33** to run through the conductors **42**, **44** in the wand assembly **24** and hose **36** to energize the headlight **54**, agitator drive motor **56** and booster fan **58**. If desired, an optional selector control switch **65** may be provided on the attachment **50** between the conductors **42**, **44** and the headlight **54**, agitator drive motor **56** and booster fan **58**. Such a control switch **65** may be manipulated by the operator to selectively energize any one or all of the electrically powered accessories provided on the power cleaning tool attachment **50**.

[**0024**] The foregoing description of the preferred embodiment of the invention has been presented for purposes of illustration and description. It is not intended to be exhaustive or to limit the invention to the precise form disclosed. Obvious modifications or variations are possible in light of the above teachings. For example, the hose **36** may be disconnected from the handle and wand assembly **24** and the powered cleaning tool **50** attached directly to the free end of the hose if desired. Of course, the handle and wand assembly **24** and hose **36** may also be provided with a ground wire **70** in conjunction with the conductors **42**, **44**.

[**0025**] The embodiment was chosen and described to provide the best illustration of the principles of the invention and its practical application to thereby enable one of ordinary skill in the art to utilize the invention in various embodiments and with various modifications as are suited to the particular use contemplated. All such modifications and

variations are within the scope of the invention as determined by the appended claims when interpreted in accordance with the breadth to which they are fairly, legally and equitably entitled. The drawings and preferred embodiment do not and are not intended to limit the ordinary meaning of the claims and their fair and broad interpretation in any way.

What is claimed:

1. An upright vacuum cleaner, comprising:

a nozzle assembly including a suction inlet;

a canister assembly pivotally connected to said nozzle assembly;

a suction generator carried on one of said canister assembly and said nozzle assembly;

a dirt collection vessel carried on one of said canister assembly and said nozzle assembly;

a telescopic handle and wand assembly carried on one of said canister assembly and said nozzle assembly, said telescopic handle and wand assembly including a first end in communication with said suction inlet and a second end in communication with said dirt collection vessel; and

a hose between said second end of said telescopic handle and wand assembly and said dirt collection vessel;

said hose and telescopic handle and wand assembly including a pair of electrical conductors for supplying electric current to a distal end of said telescopic handle and wand assembly.

2. The upright vacuum cleaner of claim 1, wherein said telescopic handle and wand assembly includes a first section and a second section forming a telescoping air path.

3. The upright vacuum cleaner of claim 2, wherein said telescopic handle and wand assembly includes a control hand grip.

4. The upright vacuum cleaner of claim 1, wherein one of said canister assembly and said nozzle assembly includes a connector and said first end of said telescopic handle and wand assembly is releaseably held in said connector.

5. The upright vacuum cleaner of claim 1, wherein a rotary agitator is carried by said nozzle assembly adjacent said suction inlet.

6. The upright vacuum cleaner of claim 1, further including a powered cleaning tool attachment.

7. The upright vacuum cleaner of claim 6, wherein said powered cleaning tool attachment includes a rotary agitator and a rotary agitator drive motor.

8. The upright vacuum cleaner of claim 6, wherein said powered cleaning tool attachment includes a headlight.

9. The upright vacuum cleaner of claim 6, wherein said powered cleaning tool attachment includes a booster fan and booster fan drive motor.

10. The upright vacuum cleaner of claim 6, wherein said powered cleaning tool attachment includes a rotary agitator, a rotary agitator drive motor and a headlight.

11. The upright vacuum cleaner of claim 10, further including a selector control switch on said powered cleaning tool attachment.

12. The upright vacuum cleaner of claim 6, wherein said powered cleaning tool attachment includes a rotary agitator, a rotary agitator drive motor, a booster fan and a booster fan drive motor.

13. The upright vacuum cleaner of claim 12, further including a selector control switch on said powered cleaning tool attachment.

14. The upright vacuum cleaner of claim 6, wherein said powered cleaning tool attachment includes a headlight, a booster fan and a booster fan drive motor.

15. The upright vacuum cleaner of claim 14, further including a selector control switch on said powered cleaning tool attachment.

16. The upright vacuum cleaner of claim 6, wherein said powered cleaning tool attachment includes a headlight, a rotary agitator, a rotary agitator drive motor, a booster fan and a booster fan drive motor.

17. The upright vacuum cleaner of claim 16, further including a selector control switch on said powered cleaning tool attachment.

* * * * *