US006607572B2

(12) **United States Patent**
Gammack et al.

(10) **Patent No.: US 6,607,572 B2**
(45) **Date of Patent: Aug. 19, 2003**

(54) **CYCLONIC SEPARATING APPARATUS**

(75) Inventors: **Peter David Gammack**, Bath (GB); **Remco Douwinus Vuuk**, Bath (GB); **Ricardo Gomiciaga Pereda**, Malmesbury (GB)

(73) Assignee: **Dyson Limited**, Malmesbury (GB)

(*) Notice: Subject to any disclaimer, the term of this patent is extended or adjusted under 35 U.S.C. 154(b) by 0 days.

(21) Appl. No.: **09/986,076**

(22) Filed: **Nov. 7, 2001**

(65) **Prior Publication Data**

US 2002/0116907 A1 Aug. 29, 2002

(30) **Foreign Application Priority Data**

Feb. 24, 2001 (GB) 0104668
Apr. 12, 2001 (GB) 0109405

(51) **Int. Cl.**[7] **B01D 45/12**

(52) **U.S. Cl.** **55/343**; 55/349; 55/424; 55/459.1; 55/DIG. 3

(58) **Field of Search** 55/343, 345, 346, 55/349, 424, 459.1; 15/350, 353

(56) **References Cited**

U.S. PATENT DOCUMENTS

2,700,468 A 1/1955 Fontein
2,837,172 A * 6/1958 Klein et al. 55/345
3,283,480 A * 11/1966 Szego 55/340
3,425,192 A 2/1969 Davis
4,373,228 A 2/1983 Dyson
4,673,495 A 6/1987 Carroll et al.
4,927,536 A * 5/1990 Worrell et al. 210/512.2

FOREIGN PATENT DOCUMENTS

DE	615004	5/1935
DE	44 04 661	8/1995
EP	0 042 723	12/1981
EP	0 037 674	8/1985
EP	0 042 723	8/1985
EP	WO 00/10718	2/2000
EP	WO 00/10719	2/2000

* cited by examiner

Primary Examiner—Robert A. Hopkins
(74) *Attorney, Agent, or Firm*—Morrison & Foerster LLP

(57) **ABSTRACT**

The invention provides cyclonic separating apparatus comprising an upstream cyclone unit and a downstream cyclone unit, the upstream cyclone unit including at least one cyclone having a first end and a second end, and the downstream cyclone unit including at least one cyclone having a first end and a second end. The upstream and downstream cyclone units of the cyclonic separation apparatus are arranged relative to one another so that the orientation of at least one cyclone of the downstream cyclone unit is substantially inverted with respect to the orientation of at least one cyclone of the upstream cyclone unit. The arrangement provides an apparatus in which good separation efficiency is achieved as well as low pressure drop across the apparatus as a whole.

28 Claims, 6 Drawing Sheets

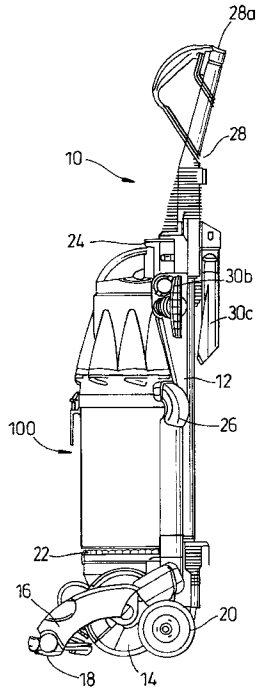

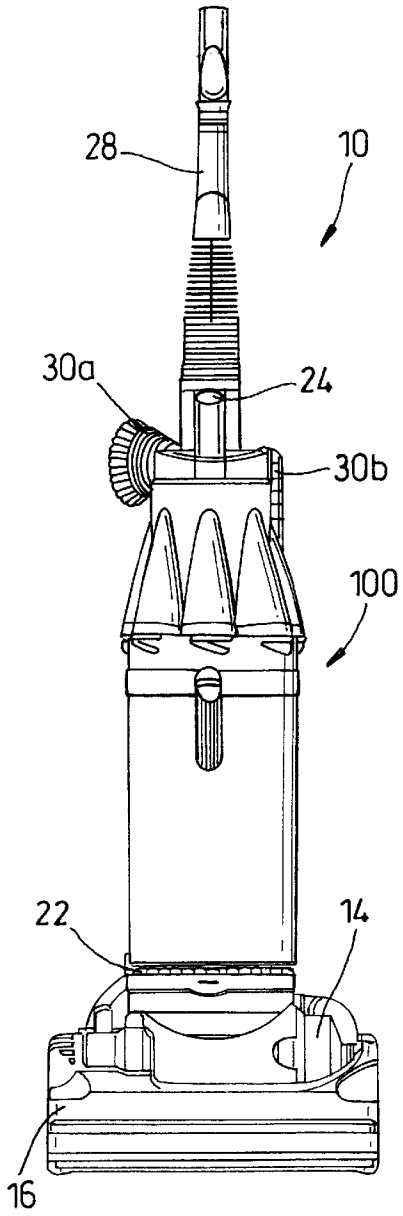
28
10
30a
24
30b
100
22
14
16

Fig. 1a

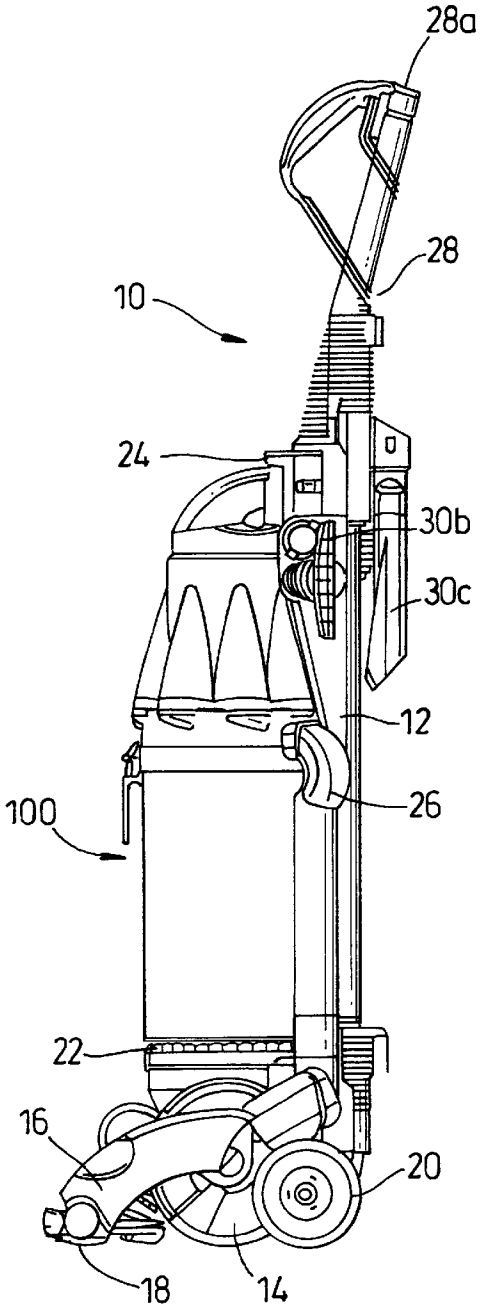
28a
28
10
24
30b
30c
12
26
100
22
16
20
18
14

Fig. 1b

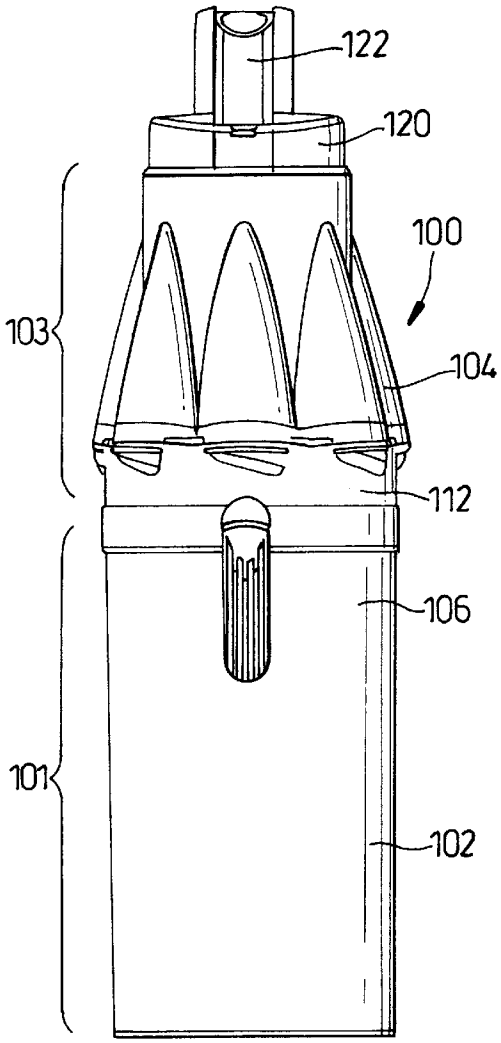

Fig. 2a

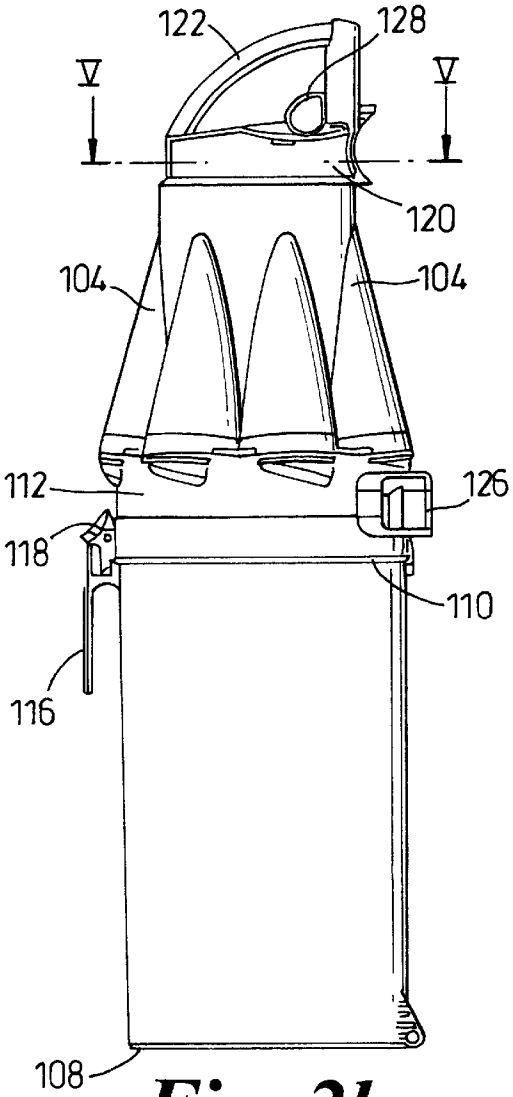

Fig. 2b

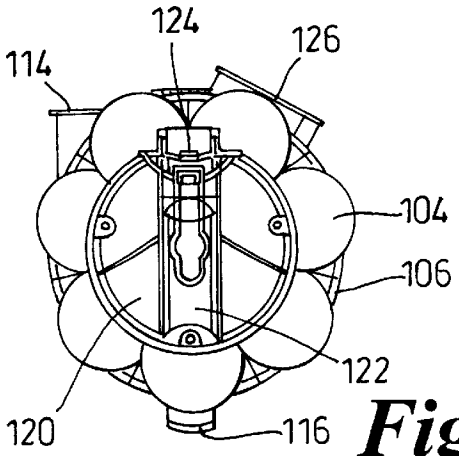

Fig. 2c

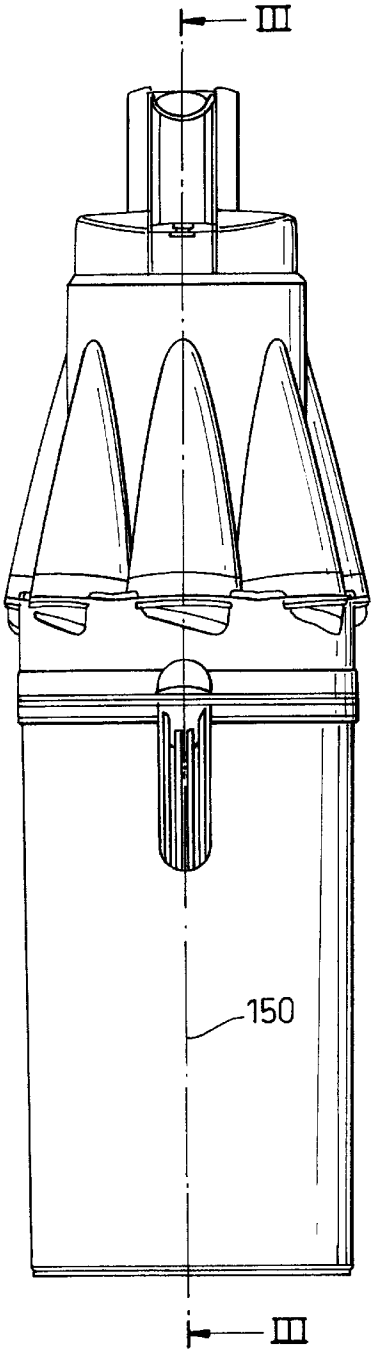
III
150
III

Fig. 3a

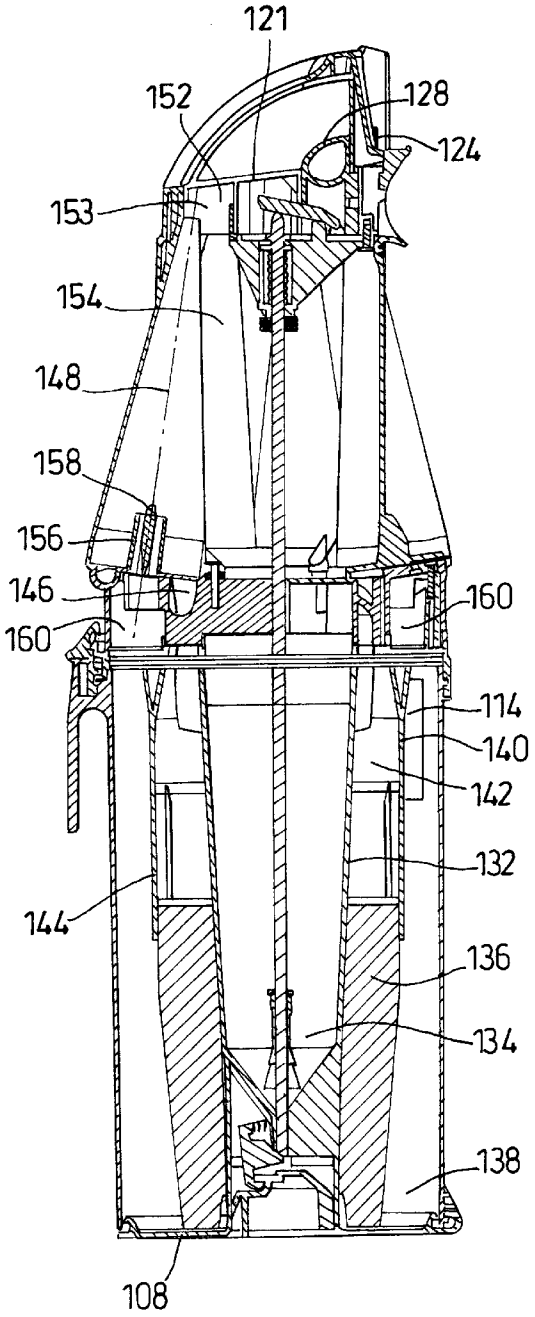
121
152
128
124
153
154
148
158
156
146
160
160
114
140
142
132
144
136
134
138
108

Fig. 3b

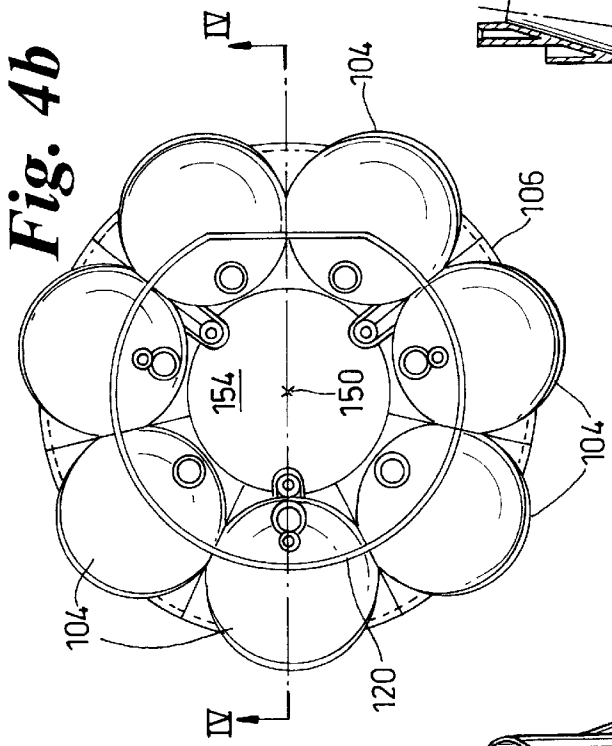

Fig. 4b

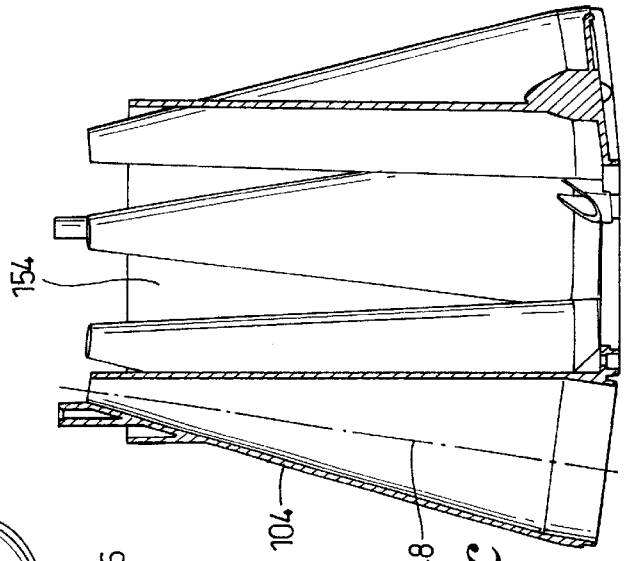

Fig. 4c

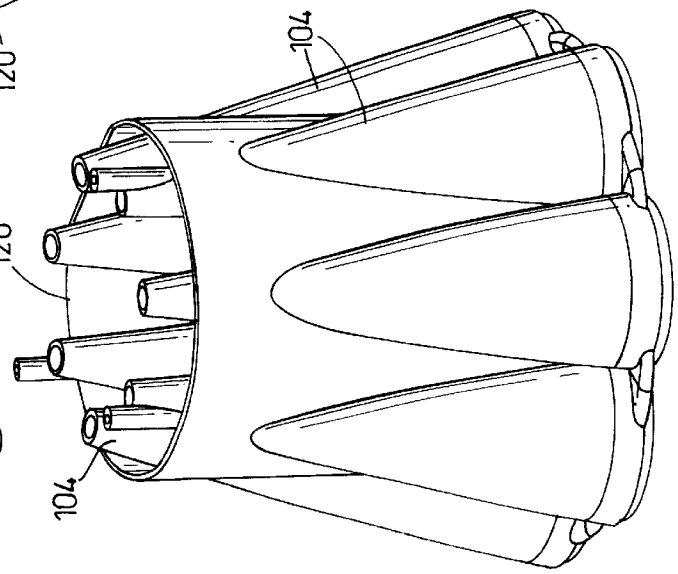

Fig. 4a

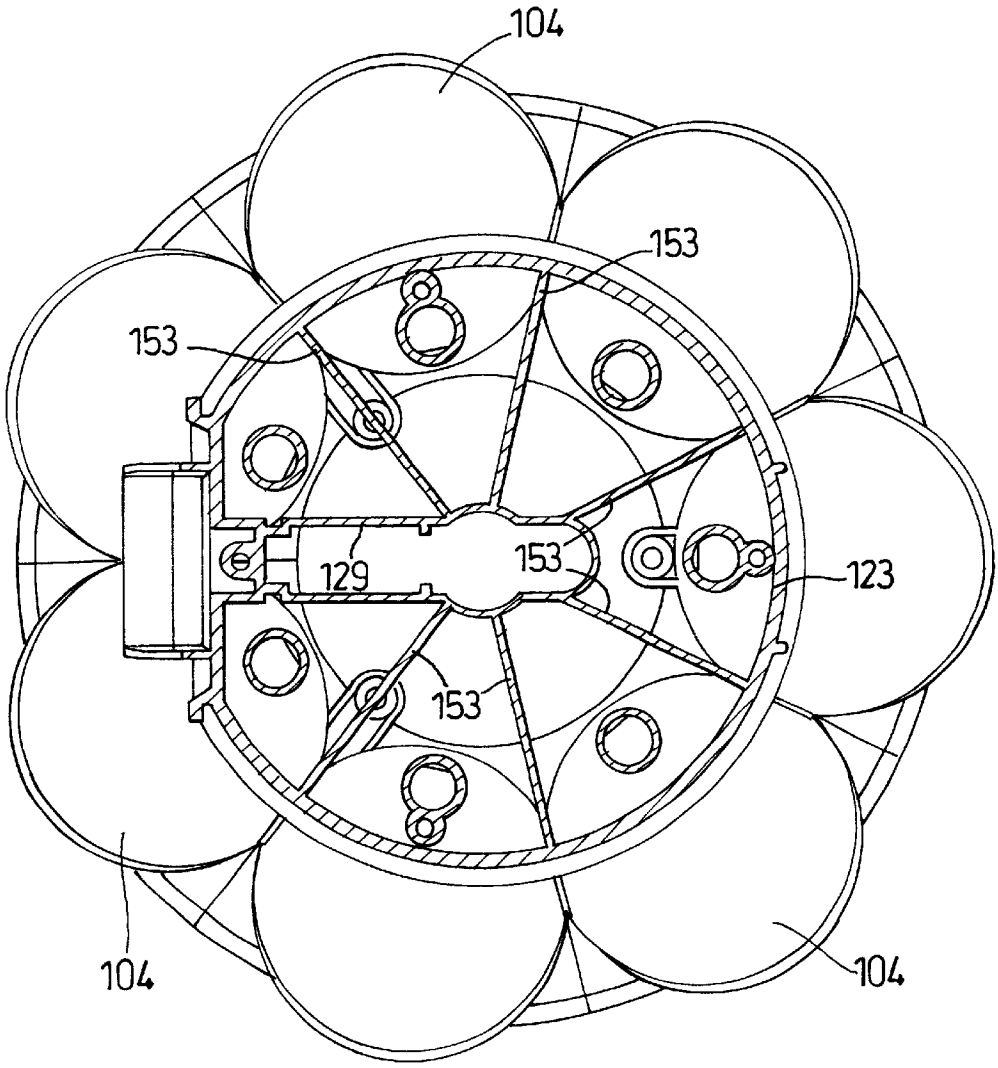

Fig. 5

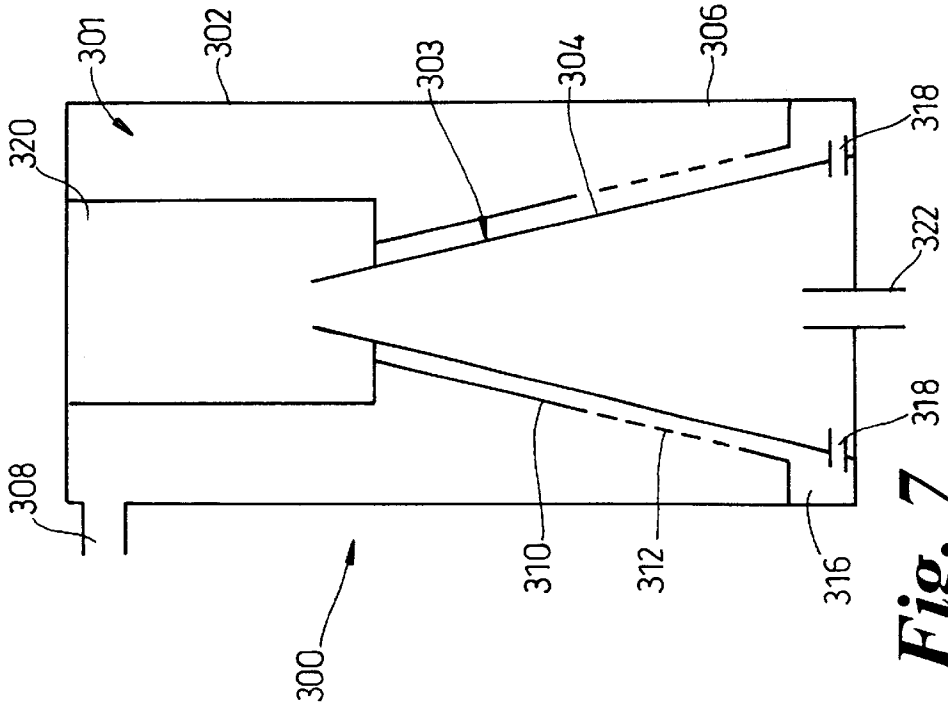
300
301
302
303
304
306
308
310
312
316
318
318
320
322

Fig. 7

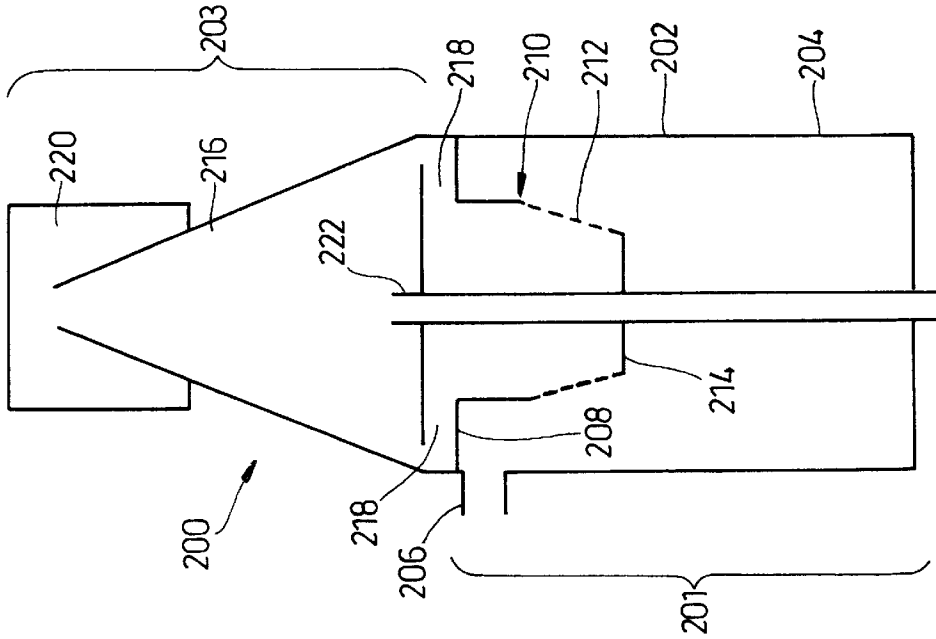
200
201
202
203
204
206
208
210
212
214
216
218
218
220
222
224

Fig. 6

CYCLONIC SEPARATING APPARATUS

FIELD OF THE INVENTION

The invention relates to cyclonic separating apparatus. Particularly, but not exclusively, the invention relates to cyclonic separating apparatus for use in vacuum cleaners.

BACKGROUND OF THE INVENTION

Cyclonic separating apparatus is well known and has uses in a wide variety of applications. Over the last decade or so, the use of cyclonic separating apparatus to separate particles from an airflow in a vacuum cleaner has been developed and introduced to the market. Detailed descriptions of cyclonic separating apparatus for use in vacuum cleaners are given in, inter alia, U.S. Pat. Nos. 3,425,192 and 4,373,228 and EP 0 042 723. From these and other prior art documents, it can be seen that it is known to provide two cyclone units in series so that the airflow passes sequentially through at least two cyclones. This allows the larger dirt and debris to be extracted from the airflow in the first cyclone, leaving the second cyclone to operate under optimum conditions and so effectively to remove very fine particles in an efficient manner. This type of arrangement has been found to be effective when dealing with airflows in which is entrained a variety of matter having a wide particle size distribution. Such is the case in vacuum cleaners.

It is also desirable for vacuum cleaners to be both compact and energy efficient. A further desirable feature is a large capacity for collecting dirt and debris to reduce the frequency of emptying. In some known arrangements, the downstream cyclone has been placed inside the upstream cyclone in an attempt to minimize the size of the cleaner (see, for example, U.S. Pat. No. 4,373,228 and EP 0 042 723). However, this reduces the capacity of the cleaner because the downstream cyclone occupies a space which would otherwise be available for dirt and dust collection. In arrangements of the type shown in U.S. Pat. No. 3,425,192, the downstream cyclones are located outside the upstream cyclone but the partially cleaned air exiting from the upstream cyclone must then travel some distance to the inlets of the downstream cyclones. This increases the pressure drop across the system as a whole and thus reduces the energy efficiency of the system. Furthermore, the volume of the means for conducting the partially cleaned air adds to the overall volume of the machine.

SUMMARY OF THE INVENTION

The present invention provides a cyclonic separating apparatus which has an improved capacity for collecting separated particles and an improved energy efficiency. The invention also provides a cyclonic separating apparatus suitable for use in vacuum cleaners and capable of achieving improved performance compared to the prior art. Another feature of the invention is to provide a cyclonic separating apparatus capable of mitigating the disadvantages of the prior art.

The invention provides a cyclonic separating apparatus that includes an upstream cyclone unit and a downstream cyclone unit. The upstream cyclone unit includes at least one cyclone having a first end and a second end, and the downstream cyclone unit includes at least one cyclone having a first end and a second end, with the upstream and downstream cyclone units arranged relative to one another so that the orientation of at least one cyclone of the downstream cyclone unit is substantially inverted with respect to the orientation of at least one cyclone of the upstream cyclone unit.

The inversion of the downstream cyclone unit with respect to the upstream cyclone unit allows the cyclone units to be arranged in a manner which reduces the length of the airflow path between the upstream cyclone unit and the downstream cyclone unit, particularly when the downstream cyclone unit is located outside the upstream cyclone unit. This means that the pressure drop across the entire apparatus can be kept to a minimum, thereby increasing the energy efficiency of the apparatus, while the collecting capacity of the apparatus is maintained as high as possible.

In a preferred embodiment, the downstream cyclone unit is located outside the upstream cyclone unit, and both cyclone units are arranged substantially vertically with the first end of one or more cyclones of the upstream cyclone unit uppermost and the first end of one or more cyclones of the downstream cyclone unit lowermost. Thus, the outlet or outlets of the cyclones of the upstream cyclone unit are located close to the inlets of the cyclone or cyclones of the downstream cyclone unit. This ensures that the length of the airflow path between the cyclone units is minimized so that losses are kept to a minimum. The second ends of one or more cyclones of the downstream cyclone unit project away from the upstream cyclone unit rather than being located inside the upstream cyclone unit. This maximizes the capacity of the upstream cyclone unit for collecting dirt and debris and thus reduces the frequency with which the upstream cyclone unit requires emptying.

A preferred feature of the aforementioned embodiment is that the cyclones of the downstream cyclone unit are inclined with respect to one another so that the said cyclones approach one another at the second ends thereof. This arrangement discourages deposition of separated fine dirt and dust on the outer surfaces of the cyclones of the upstream cyclone unit.

It is preferred that the apparatus according to the invention is incorporated into a vacuum cleaner, preferably a domestic vacuum cleaner. This is because the combined advantages of increased collecting capacity and reduced pressure drop are particularly useful in a vacuum cleaner. The user sees the benefits of reduced power consumption and less frequent emptying procedures.

Other preferred features are set out in the description below, the claims and the appended drawings.

BRIEF DESCRIPTION OF THE DRAWINGS

Embodiments of the invention will now be described with reference to the accompanying drawings, wherein:

FIGS. **1***a* and **1***b* are front and side views, respectively, of a vacuum cleaner incorporating cyclonic separating apparatus according to the invention;

FIGS. **2***a*, **2***b* and **2***c* are front, side and plan views, respectively, of a first embodiment of cyclonic separating apparatus forming part of the vacuum cleaner of FIGS. **1***a* and **1***b;*

FIGS. **3***a* and **3***b* are front and sectional side views, respectively, of the cyclonic separating apparatus of FIGS. **2***a*, **2***b* and **2***c,* FIG. **3***b* being taken along line III—III of FIG. **3***a;*

FIGS. **4***a,* **4***b* and **4***c* are perspective, plan and sectional side views, respectively, of a portion of the cyclonic separating apparatus of FIGS. **2***a,* **2***b* and **2***c,* FIG. **4***c* being taken along line IV—IV of FIG. **4***b;*

FIG. **5** is a sectional view of the portion of the cyclonic separating apparatus of FIGS. **2***a,* **2***b* and **2***c* taken along line V—V of FIG. **2***b;*

FIG. **6** is a schematic side view of a second embodiment of cyclonic separating apparatus according to the invention and suitable for use in a vacuum cleaner; and

FIG. **7** is a schematic side view of a third embodiment of cyclonic separating apparatus according to the invention and suitable for use in a vacuum cleaner.

DETAILED DESCRIPTION OF THE INVENTION

FIGS. **1***a* and **1***b* show a domestic vacuum cleaner **10** incorporating a cyclonic separating apparatus according to the present invention. The vacuum cleaner **10** includes an upstanding body **12** at a lower end of which is located a motor casing **14**. A cleaner head **16** is mounted in an articulated fashion on the motor casing **14**. A suction inlet **18** is provided in the cleaner head **16** and wheels **20** are rotatably mounted on the motor casing **14** to allow the vacuum cleaner **10** to be maneuvered over a surface to be cleaned.

Cyclonic separating apparatus **100** is mounted on the upstanding body **12** above the motor casing **14**. The cyclonic separating apparatus **100** is seated on a generally horizontal surface formed by a filter cover **22**. The filter cover **22** is located above the motor casing **14** and provides a cover for a post-motor filter (not shown). The cyclonic separating apparatus **100** is also secured to the upstanding body **12** by means of a clip **24** located at the top of the cyclonic separating apparatus **100**. The upstanding body **12** incorporates upstream ducting (not shown) for carrying dirty air to an inlet of the cyclonic separating apparatus **100** and downstream ducting **26** for carrying cleaned air away from the cyclonic separating apparatus **100**.

The upstanding body **12** further incorporates a hose and wand assembly **28** which may be retained in the configuration shown in the drawings so as to function as a handle for maneuvering the vacuum cleaner **10** over a surface to be cleaned. Alternatively, the hose and wand assembly **28** may be released to allow the distal end **28***a* of the wand to be used in conjunction with a floor tool (not shown) to perform a cleaning function, e.g., on stairs, upholstery, etc. The structure and operation of the hose and wand assembly **28** are not material to the present invention and will not be described any further here. The general structure and operation of the hose and wand assembly **28** illustrated in FIGS. **1***a* and **1***b* are similar to that described in U.S. Pat. Re. No. 32,257, the disclosure of which is incorporated herein by reference. Also, several tools and accessories **30***a,* **30***b,* **30***c,* are releasably mounted on the upstanding body **12** for storage purposes between periods of use.

The precise details of the features of the vacuum cleaner **10** described above are not material to the present invention. The invention is concerned with the details of the cyclonic separation apparatus **100** forming part of the vacuum cleaner **10**. In order for the cyclonic separation apparatus **100** to be brought into operation, the motor located in the motor casing **14** is activated so that air is drawn into the vacuum cleaner via either the suction inlet **18** or the distal end **28***a* of the hose and wand assembly **28**. This dirty air (being air having dirt and dust entrained therein) is passed to the cyclonic separation apparatus **100** via the upstream ducting. After the air has passed through the cyclonic separation apparatus **100**, it is ducted out of the cyclonic separating apparatus **100** and down the upstanding body **12** to the motor casing **14** via the downstream ducting **26**. The cleaned air is used to cool the motor located in the motor casing **14** before being exhausted from the vacuum cleaner **10** via the filter cover **22**.

This principle of operation of the vacuum cleaner **10** is known from the prior art. This invention is concerned with the cyclonic separation apparatus **100** which is illustrated in FIGS. **2***a,* **2***b* and **2***c* in isolation from the vacuum cleaner **10**.

The cyclonic separation apparatus **100** illustrated in FIG. **2** has an upstream cyclone unit **101** that includes a single upstream cyclone **102** and a downstream cyclone unit **103** including a plurality of downstream cyclones **104**. The upstream cyclone **102** includes a cylindrical bin **106** having a closed base **108**. The open upper end **110** of the cylindrical bin abuts against a circular upper molding **112** which defines an upper end of the upstream cyclone **102**. An inlet port **114** is provided in the cylindrical bin **106** in order to allow dirty air to be introduced to the interior of the upstream cyclone **102**. The inlet port **114** is shaped, positioned and configured to communicate with the upstream ducting which carries dirt-laden air from the cleaner head **16** to the cyclonic separating apparatus **100**. A handle **116** and a catch **118** are provided on the cylindrical bin **106** and the upper molding **112** respectively in order to provide means for releasing the cylindrical bin **106** from the upper molding **112** when the cylindrical bin **106** requires to be emptied. A seal (not shown) can be provided between the cylindrical bin **106** and the upper molding **112** if required.

The base **108** of the cylindrical bin can be hingedly connected to the remainder of the cylindrical bin in order to provide further access to the interior of the cylindrical bin **106** for emptying purposes if required. The embodiment illustrated herein will include a mechanism for allowing the base **108** to be hingedly opened in order to allow emptying, but the details of such a mechanism form the subject of a copending application and will not be described any further here.

Seven identical downstream cyclones **104** are provided in the downstream cyclone unit **103**. The downstream cyclones **104** are equi-angularly spaced about the central longitudinal axis **150** of the downstream cyclone unit **103**, which is coincident with the longitudinal axis of the upstream cyclone unit **101**. The arrangement is illustrated in FIG. **2***c*. Each downstream cyclone **104** is frusto-conical in shape with the larger end thereof located lowermost and the smaller end uppermost. Each downstream cyclone **104** has a longitudinal axis **148** (see FIG. **3***b*) which is inclined slightly towards the longitudinal axis **150** of the downstream cyclone unit **103**. This feature will be described in more detail below. Also, the outermost point of the lowermost end of each downstream cyclone **104** extends radially further from the longitudinal axis **150** of the downstream cyclone unit **103** than the wall of the cylindrical bin **106**. The uppermost ends of the downstream cyclones **104** project inside a collection molding **120** which extends upwardly from the surfaces of the downstream cyclones **104**. The collection molding **120** supports a handle **122** by means of which the entire cyclonic separation apparatus **100** can be transported. A catch **124** is provided on the handle **122** for the purposes of securing the cyclonic separation apparatus **100** to the upstanding body **12** at the upper end thereof. An outlet port **126** is provided in the upper molding **112** for conducting cleaned air out of the cyclonic separating apparatus **100**. The outlet port **126** is arranged and configured to co-operate with the downstream ducting **26** for carrying the cleaned air to the motor casing **14**.

The collection molding **120** also carries an actuating lever **128** designed to activate a mechanism for opening the base

108 of the cylindrical bin 106 for emptying purposes as mentioned above.

The internal features of the cyclonic separating apparatus 100 will now be described with reference to FIG. 3*b*. FIG. 3*a* corresponds to FIG. 2*a* and indicates the line III—III on which the section of FIG. 3*b* is taken.

The internal features of the upstream cyclone 102 include an internal wall 132 extending the entire length thereof. The internal space defined by the internal wall 132 communicates with the interior of the collection molding 120 as will be described below. The purpose of the internal wall 132 is to define a collection space 134 for fine dust. Located inside the internal wall 132 and in the collection space 134 are components for allowing the base 108 to open when the actuating lever 128 is actuated. The precise details and operation of these components are immaterial to the present invention and will not be described any further here.

Mounted externally of the internal wall 132 are four equi-spaced baffles or fins 136 which project radially outwardly from the internal wall 132 towards the cylindrical bin 106. These baffles 136 assist with the deposition of large dirt and dust particles in the collection space 138 defined between the internal wall 132 and the cylindrical bin 106 adjacent the base 108. The particular features of the baffles 136 are described in more detail in WO 00/04816, the disclosure of which is incorporated by reference.

Located outwardly of the internal wall 132 in an upper portion of the upstream cyclone 102 is a shroud 140. The shroud extends upwardly from the baffles 136 and, together with the internal wall 132, defines an air passageway 142. The shroud 140 has a perforated portion 144 allowing air to pass from the interior of the upstream cyclone 102 to the air passageway 142. The air passageway 142 communicates with the inlet 146 of each of the downstream cyclones 104. Each inlet 146 is arranged in the manner of a scroll so that air entering each downstream cyclone 104 is forced to follow a helical path within the respective downstream cyclone 104.

As previously mentioned, the longitudinal axis 148 of each downstream cyclone 104 is inclined towards the longitudinal axis 150 of the downstream cyclone unit 103. The upper end of each downstream cyclone 104 is closer to the longitudinal axis 150 than the lower end thereof. In this embodiment, the angle of inclination of the relevant axes 148 is substantially 7.5°.

The upper ends of the downstream cyclones 104 project inside the collection molding 120, as previously mentioned. The interior of the collection molding 120 defines a chamber 152 with which the upper ends of the downstream cyclones 104 communicate. Inside the chamber 152, a plurality of generally radially extending fins 153 project downwardly from the upper surface 121 of the collection molding 120 (see FIG. 5). The fins 153 extend inwardly from the outer wall 123 of the collection molding 120 to an inner wall 129 which surrounds the mechanism for opening the base 108 of the cylindrical bin 106 for emptying purposes. The fins 153 project downwardly to a level below that of the upper ends of the cyclones 104. This arrangement prevents any dirt and dust exiting the upper end of one of the cyclones 104 from travelling to and passing into an adjacent cyclone via its open upper end. If this were to happen, there would be a risk of the dirt and dust previously separated from the airflow by the first cyclone being returned to the airflow via the adjacent cyclone.

The collection molding 120 and the surfaces of the downstream cyclones 104 together define an axially extending passageway 154, located between the downstream cyclones 104, which communicates with the collection space 134 defined by the internal wall 132. It is thus possible for dirt and dust which exits the smaller ends of the downstream cyclones 104 to pass from the chamber 152 to the collection space 134 via the passageway 154.

Each downstream cyclone 104 has an air exit in the form of a vortex finder 156. Each vortex finder 156 is located centrally of the lowermost end of the respective downstream cyclone 104, as is the norm. In this embodiment, a center body 158 is located in each vortex finder 156. Each vortex finder communicates with an annular chamber 160 which, in turn, communicates with the outlet port 126 (see FIG. 2*c*).

FIGS. 4*a*, 4*b* and 4*c* illustrate the arrangement of the downstream cyclones 104 in greater detail. In particular, this helps to illustrate the configuration of the passageway 154. FIG. 4*b* also helps to illustrate the fact that the side of each of the downstream cyclones 104 closest to the longitudinal axis of the downstream cyclone unit 103 lies substantially parallel thereto.

The mode of operation of the apparatus described above is as follows. Dirty air (air in which dirt and dust is entrained) enters the cyclonic separating apparatus 100 via the inlet port 114. The arrangement of the inlet port 114 is essentially tangential to the wall of the cylindrical bin 106 which causes the incoming air to follow a helical path around the inside of the cylindrical bin 106. Larger dirt and dust particles, along with fluff and other large debris, are deposited in the collection space 138 adjacent the base 108 by virtue of the effect of centrifugal forces acting on the particles, as is well known. Partially cleaned air travels inwardly and upwardly away from the base 108, exiting the upstream cyclone 102 via the perforated portion 144 of the shroud 140. The partially-cleaned air then moves along the air passageway 142 in which it is divided into seven portions. Each portion enters one of the downstream cyclones 104 via the respective inlet 146. As has been mentioned above, each inlet 146 is a scroll inlet which forces the incoming air to follow a helical path inside the downstream cyclone 104. The tapering shape of the downstream cyclone 104 causes further, intense cyclonic separation to take place inside the downstream cyclone 104 so that very fine dirt and dust particles are separated from the main airflow. The dirt and dust particles exit the uppermost end of the downstream cyclone 104 while the cleaned air returns to the lower end of the downstream cyclone 104 along the axis 148 thereof and exits via the vortex finder 156. The cleaned air passes from the vortex finder 156 into the annular chamber 162 and from there to the outlet port 126. Meanwhile, the dirt and dust which has been separated from the airflow in the downstream cyclone 104 falls from the chamber 152 through the passage way 154 to the collection space 134. It is prevented from passing to the open uppermost end of the adjacent cyclones 104 by the fins 153.

When it is desired to empty the cyclonic separating apparatus 100, the base 108 can be hingedly released from the sidewall of the cylindrical bin 106 so that the dirt and debris collected in collection spaces 134 and 138 can be allowed to drop into an appropriate receptacle. As previously explained, the detailed operation of the emptying mechanism does not form part of the present invention and will not be described any further here.

The invention is not limited to the precise details of the embodiment described above. A second embodiment of cyclonic separating apparatus 200 suitable for use in a domestic vacuum cleaner is illustrated schematically in FIG.

6. In this embodiment, the apparatus **200** includes an upstream cyclone unit **201** having a single upstream cyclone **202**. The upstream cyclone unit **202** includes a substantially cylindrical bin **204** having a tangential inlet **206** arranged at the upper end thereof. The cylindrical bin **204** is partially closed at its upper end by an annular barrier **208**. Depending from the annular barrier **208** is a shroud **210** having a perforated section **212** above its lower end **214**. The annular barrier **208** extends radially from the shroud **210** to the outer wall of the cylindrical bin **204**. A downstream cyclone unit **203** comprising a single downstream cyclone **216** is arranged above the upstream cyclone **202**. The downstream cyclone **216** is frusto-conical in shape with the larger end thereof arranged lowermost. The diameter of the lowermost end of the downstream cyclone **216** corresponds generally to the diameter of the upstream cyclone **202**. A plurality of tangential inlet ports **218** provide communication between the upper end of the shroud **210** and the interior of the downstream cyclone **216** at the lowermost end thereof.

The uppermost end of the downstream cyclone **216** opens into a collection chamber **220** which is sealed about the uppermost end of the downstream cyclone **216**. The collection chamber **220** is preferably cylindrical, but can take any other convenient shape. The diameter of the collection chamber **220** immediately above the upper end of the downstream cyclone **216** is at least three times the diameter of the uppermost end of the downstream cyclone **216**. A vortex finder **222** is located centrally of the downstream cyclone at the lower most end thereof. The vortex finder **222** communicates with an elongate exit pipe **224** which passes along the axis of the cylindrical bin **204** and through the base thereof.

This arrangement operates in the following manner. Dirt-laden air enters the apparatus **200** via tangential inlet **206** and cyclonic motion is set up inside the upstream cyclone **202**. Larger particles of dirt and debris are collected in the cylindrical bin **204** adjacent the base thereof while the partially-cleaned air exits the upstream cyclone **202** via the perforated section **212** of the shroud **210**. The partially-cleaned air then passes into the downstream cyclone **216** via the tangential inlet ports **218**. Fine dirt and dust particles are separated in the downstream cyclone **216** and the dirt and dust particles exit the upper end of the downstream cyclone **216** and collect inside the collection chamber **220**. Clean air passes out of the downstream cyclone **216** via the vortex finder **212** and exits the cyclonic separating apparatus **200** via the outlet pipe **224**.

A further embodiment is illustrated in FIG. **7**. The apparatus **300** shown here includes an upstream cyclone unit **301** comprising a single upstream cyclone **302** and a downstream cyclone unit **303** comprising a single downstream cyclone **304**. The upstream cyclone **302** includes a cylindrical bin **306** having a tangential inlet **308** located at the upper end thereof. The downstream cyclone **304** is frusto-conical in shape having its larger end lowermost and its smaller end uppermost, as before, but is arranged inside the upstream cyclone **302**. Thus the larger end of the downstream cyclone **304** is located adjacent the base of the cylindrical bin **306** remote from the inlet **308** and the smaller end of the downstream cyclone **304** projects inside the cylindrical bin **306** towards the inlet **308** thereof.

A shroud **310** is positioned inside the upstream cyclone **302** and surrounding the majority of the downstream cyclone **304**. The shroud **310** has a perforated portion **312** which provides an outlet for partially-cleaned air to escape from the upstream cyclone **302**. A passageway **314** is formed between the shroud **310** and the surface of the downstream cyclone **304** along which the escaping air can pass. The passageway **314** communicates with an annular chamber **316** from which a plurality of tangential inlets **318** lead to the lowermost end of the downstream cyclone **304**.

The upper end of the downstream cyclone **304** opens into a collector chamber **320** which surrounds the upper end of the downstream cyclone **304**. The collector chamber **320** is sealed against the outer surface of the downstream cyclone **304** so that dirt and dust emitted into the collector chamber **320** are contained therein. Access to the collector chamber **320** is provided in any suitable form to allow collected dirt and dust to be removed for emptying purposes. For example, a removable portion may be provided in the end of the collector chamber **320** to allow the collector chamber **320** to be inverted and emptied. A vortex finder **322** is provided in the center of the lowermost end of the downstream cyclone **304** to provide an exit path for cleaned air from the downstream cyclone **304**.

In operation, dirty air enters the upstream cyclone **302** via the tangential inlet **308** and follows a helical path down the cylindrical bin **306** thus effecting centrifugal separation of larger dirt and debris which is collected in the bottom of the bin **306**. The partially-cleaned air exits the upstream cyclone through the perforated portion **312** of the shroud **310** and passes along the passageway **314** to the annular chamber **316**. From there, the partially-cleaned air passes along the tangential inlets **318** and into the interior of the downstream cyclone **304** where it is again forced to follow a helical path. Intense centrifugal separation occurs as the air passes up the cyclone **304** towards the smaller end thereof. Separated dirt and dust particles are emitted from the smaller end of the cyclone **304** and collected in the collector chamber **320** while cleaned air exits the cyclone **304** via the vortex finder. From the vortex finder, the cleaned air is ducted away from the cyclonic separating apparatus **300** to the motor for cooling purposes.

The invention is not limited to the precise details of the embodiments described above. It must be stressed that the features of the vacuum cleaner in which the cyclonic cleaning apparatus is to be used are immaterial to the invention. Indeed, it is envisaged that cyclonic separating apparatus of the type described above can be put to use in other areas where good separation efficiencies combined with low pressure drops are required. It will be appreciated that, if desired, either or both of the upstream and downstream cyclone units can be made up of either a single cyclone or a plurality of cyclones arranged in parallel. Furthermore, there is no particular need for the apparatus to be arranged so that the axes of the cyclone units are vertical and the axes may indeed be inclined to the vertical or even horizontal if desired. The fact that centrifugal separation is not greatly affected by gravity makes this possible as long as the collecting areas of the cyclone units are arranged to collect the debris without interference to the airflow paths necessary to effect separation. In a further variation to the embodiments described in detail above, the downstream cyclones illustrated in FIGS. **1** to **5** may be arranged so that their respective axes are arranged parallel to one another instead of being inclined towards the axis of the downstream cyclone unit as shown in the drawings. Other variations and modifications will be apparent to a skilled reader.

What is claimed is:

1. A cyclonic separating apparatus, comprising an upstream cyclone unit and a downstream cyclone unit,

the upstream cyclone unit comprising at least one cyclone having a first end and a second end, and the downstream cyclone unit comprising a plurality of cyclones having first ends and second ends and arranged in parallel,

wherein the upstream and downstream cyclone units are arranged relative to one another so that the orientation of at least one cyclone of the downstream cyclone unit is substantially inverted with respect to the orientation of at least one cyclone of the upstream cyclone unit.

2. The cyclonic separating apparatus of claim **1**, wherein the at least one cyclone of the upstream cyclone unit has an inlet located at the first end thereof.

3. The cyclonic separating apparatus of claim **2**, wherein the at least one cyclone of the upstream cyclone unit has an outlet located at the first end thereof.

4. The cyclonic separating apparatus of claim **3**, wherein the at least one cyclone of the upstream cyclone unit has a collector or collection area located at the second end thereof.

5. The cyclonic separating apparatus of claim **1**, **2**, **3** or **4**, wherein the at least one cyclone of the upstream cyclone unit is substantially cylindrical in shape between the first and second ends thereof.

6. The cyclonic separating apparatus of claim **1**, **2**, **3** or **4**, wherein the cyclones of the downstream cyclone unit have inlets located at the first ends thereof.

7. The cyclonic separating apparatus of claim **6**, wherein the cyclones of the downstream cyclone unit have outlets located at the first ends thereof.

8. The cyclonic separating apparatus of claim **7**, wherein the cyclones of the downstream cyclone unit have a collector located at the second ends thereof.

9. The cyclonic separating apparatus of claim **5**, wherein the cyclones of the downstream cyclone unit have inlets located at the first ends thereof.

10. The cyclonic separating apparatus of claim **9**, wherein the cyclones of the downstream cyclone unit have outlets located at the first ends thereof.

11. The cyclonic separating apparatus of claim **10**, wherein the cyclones of the downstream cyclone unit have a collector located at the second ends thereof.

12. The cyclonic separating apparatus of claim **1**, **2**, **3** or **4**, wherein the cyclones of the downstream cyclone unit are frusto-conical in shape between the first and second ends thereof.

13. The cyclonic separating apparatus of claim **1**, wherein the longitudinal axes of the cyclones of the downstream cyclone unit are parallel to one another.

14. The cyclonic separating apparatus of claim **1**, wherein the longitudinal axes of the cyclones of the downstream cyclone unit are inclined to one another so that the cyclones are nearer to one another at the second ends thereof.

15. The cyclonic separating apparatus of claim **14**, wherein the orientation of the at least one cyclone of the upstream cyclone unit is substantially vertical with the first end or ends thereof uppermost, and the orientation of the cyclones of the downstream cyclone unit is substantially vertical with the first ends lowermost.

16. The cyclonic separating apparatus of claim **5**, wherein the orientation of the at least one cyclone of the upstream cyclone unit is inclined to the vertical with the first end or ends thereof uppermost, and the orientation of the cyclones of the downstream cyclone unit is inclined to the vertical with the first ends lowermost.

17. The cyclonic separating apparatus of claim **14**, wherein the orientation of the at least one cyclone of the upstream cyclone unit is inclined to the vertical with the first end or ends thereof uppermost, and the orientation of the cyclones of the downstream cyclone unit is inclined to the vertical with the first ends lowermost.

18. The cyclonic separating apparatus of claim **8**, wherein the second ends of the cyclones of the downstream cyclone unit project into the collector and fins are provided between the second ends of adjacent cyclones.

19. The cyclonic separating apparatus of claim **11**, wherein the second ends of the cyclones of the downstream cyclone unit project into the collector and fins are provided between the second ends of adjacent cyclones.

20. The cyclonic separating apparatus of claim **18**, wherein the fins project downwardly from a closed upper surface of the collector to a level below that of the second ends of the cyclones of the downstream cyclone unit.

21. The cyclonic separating apparatus of claim **19**, wherein the fins project downwardly from a closed upper surface of the collector to a level below that of the second ends of the cyclones of the downstream cyclone unit.

22. The cyclonic separating apparatus of claim **5**, wherein at least one cyclone of the plurality of cyclone of the downstream cyclone unit is located wholly inside a cyclone of the upstream cyclone unit.

23. The cyclonic separating apparatus of claim **14**, wherein at least one cyclone of the plurality of cyclones of the downstream cyclone unit is located wholly inside a cyclone of the upstream cyclone unit.

24. The cyclonic separating apparatus of claim **16**, wherein at least one cyclone of the plurality of cyclones of the downstream cyclone unit is located wholly inside a cyclone of the upstream cyclone unit.

25. A cyclonic separating apparatus, comprising an upstream cyclone unit and a downstream cyclone unit,

the upstream cyclone unit comprising at least one cyclone having a first end and a second end, and the downstream cyclone unit comprising at least one cyclone having a first end and a second end,

wherein the at least one cyclone of the upstream cyclone unit is substantially cylindrical in shape between the first and second ends thereof and

wherein the orientation of the at least one cyclone of the upstream cyclone unit is inclined to the vertical with the first end or ends thereof uppermost, and the orientation of the at least one cyclone of the downstream cyclone unit is inclined to the vertical with the first end or ends lowermost.

26. The cyclonic separating apparatus of claim **25**, wherein at least one cyclone of the plurality of cyclones of the downstream cyclone unit is located wholly inside a cyclone of the upstream cyclone unit.

27. A cyclonic separating apparatus, comprising an upstream cyclone unit and a downstream cyclone unit,

the upstream cyclone unit comprising at least one cyclone having a first end and a second end, and the downstream cyclone unit comprising at least one cyclone having a first end and a second end,

wherein the at least one cyclone of the upstream cyclone unit is substantially cylindrical in shape between the first and second ends thereof,

wherein the upstream and downstream cyclone units are arranged relative to one another so that the orientation of at least one cyclone of the downstream cyclone unit is substantially inverted with respect to the orientation of at least one cyclone of the upstream cyclone unit, and

wherein the at least one cyclone of the downstream cyclone unit is frusto-conical in shape between the first and second ends thereof.

28. A cyclonic separating apparatus, comprising an upstream cyclone unit and a downstream cyclone unit,

the upstream cyclone unit comprising at least one cyclone having a first end and a second end, and the down-

stream cyclone unit comprising at least one cyclone having a first end and a second end,

wherein the at least one cyclone of the upstream cyclone unit is substantially cylindrical in shape between the first and second ends thereof and

wherein at least one cyclone of the downstream cyclone unit is located wholly inside a cyclone of the upstream cyclone unit.

* * * * *

UNITED STATES PATENT AND TRADEMARK OFFICE

CERTIFICATE OF CORRECTION

PATENT NO. : 6,607,572 B2
DATED : August 19, 2003
INVENTOR(S) : Peter David Gammack et al.

It is certified that error appears in the above-identified patent and that said Letters Patent is hereby corrected as shown below:

Title page,
Item [75], Inventors, change the second inventor's last name "**Vuuk**" to -- **Vuijk** --.

Column 10,
Line 15, change the second "cyclone" to -- cyclones --.

Signed and Sealed this

Eleventh Day of November, 2003

JAMES E. ROGAN
Director of the United States Patent and Trademark Office