UNITED STATES PATENT AND TRADEMARK OFFICE

---

BEFORE THE PATENT TRIAL AND APPEAL BOARD

---

GOOGLE LLC, CELLCO PARTNERSHIP D/B/A VERIZON WIRELESS,
VERIZON CORPORATE SERVICES GROUP INC.,
T-MOBILE USA, INC., SPRINT LLC F/K/A SPRINT CORP., AND
AT&T SERVICES, INC.,

Petitioners,

v.

Headwater Research LLC,

Patent Owner.

---

Case: IPR2024-00942

U.S. Patent No. 8,589,541
Issue Date: Nov. 19, 2013

Title: Device-Assisted Services for Protecting Network Capacity

---

**PETITION FOR *INTER PARTES* REVIEW**

## TABLE OF CONTENTS


I. STANDING ..... 1

II. RELIEF REQUESTED ..... 1

III. THE ’541 PATENT ..... 1

A. Overview ..... 1

B. Prosecution History ..... 2

C. POSITA ..... 2

IV. CLAIM CONSTRUCTION ..... 3

V. PRIOR ART ..... 3

A. Rao ..... 3

B. Fadell ..... 4

C. Freund ..... 6

VI. Ground 1: Rao Anticipates and/or Renders Obvious Claims 1, 3-6, 8-23, 26, 45, 49, 50, 58-60, 64, 157, 165, 169, and 171 ..... 6

A. Claim 1 ..... 7

B. Claim 3 ..... 19

C. Claim 4 ..... 19

D. Claim 5 ..... 20

E. Claim 6 ..... 20

F. Claim 8 ..... 21

G. Claim 9 ..... 21

H. Claim 10 ..... 23

I. Claim 11 ..... 23

J. Claim 12 .....23
K. Claim 13 .....24
L. Claim 14 .....25
M. Claim 15 .....28
N. Claim 16 .....28
O. Claim 17 .....29
P. Claim 18 .....30
Q. Claim 19 .....30
R. Claim 20 .....30
S. Claim 21 .....31
T. Claim 22 .....32
U. Claim 23 .....33
V. Claim 26 .....33
W. Claim 45 .....34
X. Claim 49 .....35
Y. Claim 50 .....35
Z. Claim 58 .....35
AA. Claim 59 .....36
BB. Claim 60 .....36
CC. Claim 64 .....37
DD. Claim 157 .....38
EE. Claim 165 .....39
FF. Claim 169 .....40

GG. Claim 171 .....42

VII. Ground 2: Rao-Fadell Render Obvious Claims 1, 2, 7, 41-43, 46, 63, 155, 156, 160-164, 166-168, and 170.....42

A. Motivation to Combine .....42

B. Claim 1 .....44

C. Claim 2 .....53

D. Claim 7 .....54

E. Claim 41 .....56

F. Claim 42 .....58

G. Claim 43 .....58

H. Claim 46 .....59

I. Claim 63 .....60

J. Claim 155 .....61

K. Claim 156 .....62

L. Claim 160 .....63

M. Claim 161 .....64

N. Claim 162 .....65

O. Claim 163 .....65

P. Claim 164 .....66

Q. Claim 166 .....66

R. Claim 167 .....67

S. Claim 168 .....68

T. Claim 170 .....69

VIII. Ground 3: Rao-Freund Render Obvious Claims 44, 47, 48, and 51-57 .....70

A. Motivation to Combine .....70

B. Claim 44 .....72

C. Claim 47 .....72

D. Claim 48 .....74

E. Claim 51 .....75

F. Claim 52 .....75

G. Claim 53 .....75

H. Claim 54 .....76

I. Claim 55 .....76

J. Claim 56 .....78

K. Claim 57 .....79

IX. 35 U.S.C. § 314.....79

X. 35 U.S.C. § 325.....80

XI. MANDATORY NOTICES UNDER 37 C.F.R. § 42.8.....81

A. Real Party-in-Interest .....81

B. Related Matters.....82

C. Lead and Backup Counsel Information.....82

XII. CONCLUSION.....85

## TABLE OF AUTHORITIES

### Cases

*CoolIT Systems, Inc. v. Asetek Danmark A/S*,
IPR2021-01195, Paper 10 (PTAB Dec. 28, 2021) .....80

### Statutes

35 U.S.C. § 314 .....79

35 U.S.C. § 315 .....82

35 U.S.C. § 325 .....80

### Regulations

37 C.F.R. § 42.8 .....81

## LIST OF EXHIBITS

| Exhibit | Description |
|---|---|
| EX-1001 | U.S. Patent No. 8,589,541 ("the '541 patent") |
| EX-1002 | U.S. Patent Publication No. 2006/0039354 to Rao et al. ("Rao") |
| EX-1003 | U.S. Patent Publication No. 2010/0017506 to Fadell ("Fadell") |
| EX-1004 | U.S. Patent No. 5,987,611 to Freund ("Freund") |
| EX-1005 | U.S. Patent No. 8,028,060 to Wyld et al. ("Wyld") |
| EX-1006 | File History of U.S. Patent No. 8,589,541 (Excerpted) |
| EX-1007 | *Curriculum Vitae* of Andrew Wolfe |
| EX-1008 | *Enable-ExchangeCertificate*, Microsoft, https://learn.microsoft.com/en-us/powershell/module/exchange/enable-exchangecertificate?view=exchange-ps (last visited May 15, 2024) |
| EX-1009 | Larry L. Peterson & Bruce S. Davie, *Computer Networks: A Systems Approach* (3d ed. 2003) |
| EX-1010 | U.S. Patent Publication No. 2007/0038763 to Oestvall ("Oestvall") |
| EX-1011 | U.S. Patent Publication No. 2009/0207817 to Montemurro et al. ("Montemurro") |
| EX-1012 | Elizabeth Woyke, *World's Most Wired Airports*, NBC News (Mar. 11, 2008, 10:02 AM), https://www.nbcnews.com/id/wbna23391922 (last visited May 15, 2024) |
| EX-1013 | *Madison Avenue Calling*, Gainesville Sun (Jan. 19, 2007, 11:00 PM), https://www.gainesville.com/story/news/2007/01/20/madison-avenue-calling/31509806007/ (last visited May 15, 2024) |
| EX-1014 | Spyros Sakellariadis, *Using Exchange Server with SMTP and POP3*, ITPro Today (May 31, 1998), https://www.itprotoday.com/email-and-calendaring/using-exchange-server-smtp-and-pop3#close-modal (last visited May 16, 2024) |
| EX-1015 | Declaration of Petitioner's Expert, Andrew Wolfe ("Wolfe Declaration") |
| EX-1016 | U.S. Patent No. 8,914,783 to Van Camp ("Van Camp") |
| EX-1017 | Eastern District of Texas Model Order Focusing on Claim and Prior Art Reduction |
| EX-1018 | Docket Control Order, *Headwater Research LLC v. Verizon Communications Inc.*, No. 2:23-cv-00352, ECF No. 40 (E.D. Tex. Oct. 24, 2023) |
| EX-1019 | [Reserved] |

| Exhibit | Description |
|---|---|
| EX-1020 | Defendants' Motion to Focus Patent Claims, *Headwater Research LLC v. AT&T Services, Inc.*, No. 2:23-cv-00397, ECF No. 53 (E.D. Tex. Apr. 11, 2024) |
| EX-1021 | Defendants' Motion for Entry of an Order Focusing Asserted Patent Claim and Prior Art, *Headwater Research LLC v. T-Mobile USA, Inc.*, No. 2:23-cv-00379, ECF No. 58 (E.D. Tex. Apr. 30, 2024) |
| EX-1022 | Defendants' Motion for Entry of an Order Focusing Asserted Patent Claim and Prior Art, *Headwater Research LLC v. Verizon Communications Inc.*, No. 2:23-cv-00352, ECF No. 63 (E.D. Tex. May 1, 2024) |

## CLAIM LISTINGS

### Independent Claim 1

| | |
|---|---|
| **[1a]** | A non-transitory computer-readable storage medium storing machine-executable instructions that, when executed by one or more processors of a wireless end-user device, cause the one or more processors to: |
| **[1b]** | identify a service usage activity of the wireless end-user device, the service usage activity being associated with a first software component of a plurality of software components on the wireless end user device, |
| **[1c]** | the service usage activity comprising one or more prospective or successful communications over a wireless network; |
| **[1d]** | determine whether the service usage activity comprises a background activity; |
| **[1e]** | determine at least an aspect of a policy based on a user input obtained through a user interface of the wireless end-user device or based on information from a network element, |
| **[1f]** | the policy to be applied if the service usage activity is the background activity, the policy at least for controlling the service usage activity; and |
| **[1g]** | if it is determined that the service usage activity is the background activity, apply the policy. |

### Dependent Claim 2

| | |
|---|---|
| **[2a]** | The non-transitory computer-readable storage medium recited in claim 1, wherein the first software component comprises at least a portion of an application component or at least a portion of an operating system component, and |
| **[2b]** | wherein the one or more prospective or successful communications over the wireless network comprise an update to the first software component. |

**Dependent Claim 3**

| | |
|---|---|
| **3** | The non-transitory computer-readable storage medium recited in claim 1, wherein the one or more prospective or successful communications over the wireless network comprise a communication associated with a network access, background signaling, a cloud synchronization service, an information feed, a download, an e-mail, a chat client, a security update, a peer-to-peer networking application update, a report of a behavior associated with the wireless end-user device, or a combination of these. |

**Dependent Claim 4**

| | |
|---|---|
| **4** | The non-transitory computer-readable storage medium recited in claim 1, wherein the one or more prospective or successful communications over the wireless network comprise a communication associated with a content update or a content download. |

**Dependent Claim 5**

| | |
|---|---|
| **5** | The non-transitory computer-readable storage medium recited in claim 1, wherein the one or more prospective or successful communications over the wireless network comprise a communication associated with an image, music, a video, an electronic book, an e-mail attachment, a content or media subscription, a news feed, a text message, a video chat, or a combination of these. |

**Dependent Claim 6**

| | |
|---|---|
| **6** | The non-transitory computer-readable storage medium recited in claim 1, wherein the one or more prospective or successful communications over the wireless network comprise a communication associated with a device application or widget, a device operating system function, a file download, streaming media, a software update, a firmware update, a website, a connection to a server, a web browser, or a synchronization service. |

**Dependent Claim 7**

| | |
|---|---|
| **7** | The non-transitory computer-readable storage medium recited in claim 1, wherein identify a service usage activity of the wireless end-user device comprises identify an intention to launch or start the first software component. |

**Dependent Claim 8**

| | |
|---|---|
| **8** | The non-transitory computer-readable storage medium recited in claim 1, wherein identify a service usage activity of the wireless end-user device comprises identify: an application identifier associated with the service usage activity or the first software component, an operating system function identifier associated with the service usage activity or the first software component, an aggregate service activity identifier, a component service activity identifier, or a combination of these. |

**Dependent Claim 9**

| | |
|---|---|
| **[9a]** | The non-transitory computer-readable storage medium recited in claim 1, wherein the service usage activity results from cooperation between the first software component and at least one other software component, application, process, function, activity, or service, and |
| **[9b]** | wherein identify a service usage activity of the wireless end-user device comprises:<br><br>identify a data flow to or from the at least one other software component, application, process, function, activity, or service; and<br><br>associate the data flow with the first software component. |

**Dependent Claim 10**

| | |
|---|---|
| **10** | The non-transitory computer-readable storage medium recited in claim 9, wherein the first software component comprises at least a portion of an application, and wherein the at least one other software component, application, process, function, activity, or service performs a proxy function. |

**Dependent Claim 11**

| | |
|---|---|
| **11** | The non-transitory computer-readable storage medium recited in claim 9, wherein the at least one other software component, application, process, function, activity, or service performs a proxy function. |

**Dependent Claim 12**

| | |
|---|---|
| **12** | The non-transitory computer-readable storage medium recited in claim 9, wherein the at least one other software component, application, process, function, activity, or service comprises a media service manager, an e-mail service manager, a domain name service (DNS) function, a software download service manager, a media download manager, a data download service manager, a media library function, a simple mail transfer protocol (SMTP) proxy, an Internet message access protocol (IMAP) proxy, a post office protocol (POP) proxy, a hypertext transfer protocol (HTTP) proxy, an instant messaging (IM) proxy, a virtual private network (VPN) service manager, or a secure socket layer (SSL) proxy. |

**Dependent Claim 13**

| | |
|---|---|
| **[13a]** | The non-transitory computer-readable storage medium recited in claim 1, wherein identify a service usage activity of the wireless end-user device comprises:<br><br>monitor an application proxy service flow; and |
| **[13b]** | classify the application proxy service flow as being initiated by or belonging to the first software component. |

**Dependent Claim 14**

| | |
|---|---|
| **[14a]** | The non-transitory computer-readable storage medium recited in claim 1, wherein identify a service usage activity of the wireless end-user device comprises:<br><br>associate an identifier identifying the first software component with a request to a proxy service; |
| **[14b]** | associate the request to the proxy service with a traffic flow, the traffic flow comprising the service usage activity; and |
| **[14c]** | associate the traffic flow with the identifier. |

**Dependent Claim 15**

| | |
|---|---|
| **15** | The non-transitory computer-readable storage medium recited in claim 14, wherein the identifier comprises a name, a fingerprint, an identification tag, a process number, or a credential. |

**Dependent Claim 16**

| | |
|---|---|
| **[16a]** | The non-transitory computer-readable storage medium recited in claim 1, wherein the service usage activity results from cooperation between the first software component and a proxy function, and |
| **[16b]** | wherein identify a service usage activity of the wireless end-user device comprises:<br><br>identify a data flow to or from the proxy function; and<br><br>associate the data flow with the first software component. |

**Dependent Claim 17**

| | |
|---|---|
| **17** | The non-transitory computer-readable storage medium recited in claim 1, wherein identify a service usage activity of the wireless end-user device comprises identify the service usage activity based on a stream, a flow, a destination, a port, a packet inspection, or a combination of these. |

**Dependent Claim 18**

| | |
|---|---|
| **18** | The non-transitory computer-readable storage medium recited in claim 1, wherein identify a service usage activity of the wireless end-user device comprises determine an identifier associated with the first software component, a number associated with the first software component, a name associated with the first software component, or a signature associated with the first software component. |

**Dependent Claim 19**

| | |
|---|---|
| **19** | The non-transitory computer-readable storage medium recited in claim 1, wherein the first software component comprises at least a portion of an application on the wireless end-user device. |

**Dependent Claim 20**

| | |
|---|---|
| **20** | The non-transitory computer-readable storage medium recited in claim 1, wherein the first software component comprises an operating system component, function, or service. |

**Dependent Claim 21**

| | |
|---|---|
| **21** | The non-transitory computer-readable storage medium recited in claim 1, wherein the first software component comprises a software function, utility, process, or tool. |

**Dependent Claim 22**

| | |
|---|---|
| **22** | The non-transitory computer-readable storage medium recited in claim 1, wherein the first software component comprises a plurality of applications, processes, functions, activities, or services. |

**Dependent Claim 23**

| | |
|---|---|
| **23** | The non-transitory computer-readable storage medium recited in claim 1, wherein the first software component comprises a Java archive (JAR) file, an application that uses an operating system (OS) function, an application that uses a proxy service function, or an OS process function that supports an application or OS function. |

**Dependent Claim 26**

| | |
|---|---|
| **26** | The non-transitory computer-readable storage medium recited in claim 1, wherein the policy is based on a background service class, a background service state, or a combination of these. |

**Dependent Claim 41**

| | |
|---|---|
| **[41a]** | The non-transitory computer-readable storage medium recited in claim 1, wherein the wireless network is a first wireless network, and wherein the service usage activity is a first service usage activity, and |
| **[41b]** | wherein the policy assists the one or more processors to control the first |

| | |
|---|---|
| | service usage activity when the wireless end-user device is connected to the first wireless network and |
| **[41c]** | refrain from controlling a second service usage activity when the wireless end-user device is connected to a second wireless network, the second service usage activity being associated with the first software component. |

**Dependent Claim 42**

| | |
|---|---|
| **42** | The non-transitory computer-readable storage medium recited in claim 41, wherein control the first service usage activity comprises prevent, restrict, or block the first service usage activity. |

**Dependent Claim 43**

| | |
|---|---|
| **43** | The non-transitory computer-readable storage medium recited in claim 41, wherein the second wireless network is a wireless fidelity (WiFi) network or a home network. |

**Dependent Claim 44**

| | |
|---|---|
| **44** | The non-transitory computer-readable storage medium recited in claim 1, wherein determine whether the service usage activity comprises a background activity comprises determine whether a user is interacting with or has interacted with the first software component. |

**Dependent Claim 45**

| | |
|---|---|
| **45** | The non-transitory computer-readable storage medium recited in claim 1, wherein determine whether the service usage activity comprises a background activity comprises determine whether the first software component is in a user interface foreground. |

**Dependent Claim 46**

| | |
|---|---|
| **46** | The non-transitory computer-readable storage medium recited in claim 1, wherein determine whether the service usage activity comprises a background activity comprises determine whether the service usage activity is a software update. |

**Dependent Claim 47**

| | |
|---|---|
| **47** | The non-transitory computer-readable storage medium recited in claim 1, wherein determine whether the service usage activity comprises a background activity comprises determine whether the first software component is or has been classified as being in a background state or the service usage activity is or has been classified as a background service. |

**Dependent Claim 48**

| | |
|---|---|
| **48** | The non-transitory computer-readable storage medium recited in claim 1, wherein determine whether the service usage activity comprises a background activity comprises determine whether the service usage activity is identified by a list specifying one or more background activities. |

**Dependent Claim 49**

| | |
|---|---|
| **49** | The non-transitory computer-readable storage medium recited in claim 1, wherein determine whether the service usage activity comprises a background activity comprises determine whether the service usage activity is a foreground activity. |

**Dependent Claim 50**

| | |
|---|---|
| **50** | The non-transitory computer-readable storage medium recited in claim 1, wherein determine whether the service usage activity comprises a background activity comprises determine whether the first software component is a foreground component. |

**Dependent Claim 51**

| | |
|---|---|
| **51** | The non-transitory computer-readable storage medium recited in claim 1, wherein determine whether the service usage activity comprises a background activity comprises:<br><br>determine a classification of the service usage activity, and<br><br>based on the classification of the service usage activity, determine whether the service usage activity comprises the background activity. |

**Dependent Claim 52**

| | |
|---|---|
| **52** | The non-transitory computer-readable storage medium recited in claim 51, wherein the classification of the service usage activity is based on: whether the first software component requires access to the wireless network, whether the one or more prospective or successful communications over the wireless network comprise an update to the first software component, whether the first software component requires information about the wireless network, whether the first software component requires location information, whether the one or more prospective or successful communications over the wireless network comprise an operating system software update, whether the one or more prospective or successful communications over the wireless network comprise a security software update, whether the one or more prospective or successful communications over the wireless network comprise a communication associated with a network-based back-up, whether the one or more prospective or successful communications over the wireless network comprise a communication associated with an e-mail download, whether the one or more prospective or successful communications over the wireless network comprise communications associated with a cloud synchronization service, or a combination of these. |

**Dependent Claim 53**

| | |
|---|---|
| **[53a]** | The non-transitory computer-readable storage medium recited in claim 51, wherein the user input obtained through the user interface of the wireless end-user device is a first user input, and |
| **[53b]** | wherein determine a classification of the service usage activity is based on a characteristic of the first software component, a content type associated with the service usage activity, a characteristic of the wireless network, a service plan, a user preference, the first user input, a second user input, the information from the network element, or a combination of these. |

**Dependent Claim 54**

| | |
|---|---|
| **54** | The non-transitory computer-readable storage medium recited in claim 1, wherein determine whether the service usage activity comprises a background activity is based on a user interaction with the wireless end-user device. |

**Dependent Claim 55**

| | |
|---|---|
| **55** | The non-transitory computer-readable storage medium recited in claim 1, wherein determine whether the service usage activity comprises a background activity comprises determine whether a value comprising a measure of the service usage activity satisfies a condition relative to a threshold. |

**Dependent Claim 56**

| | |
|---|---|
| **56** | The non-transitory computer-readable storage medium recited in claim 1, wherein determine whether the service usage activity comprises a background activity comprises determine whether the first software component is a foreground component or an unclassified component. |

**Dependent Claim 57**

| | |
|---|---|
| **57** | The non-transitory computer-readable storage medium recited in claim 1, wherein determine whether the service usage activity comprises a background activity comprises determine whether the first software component is in a foreground of user interaction or determine whether the first software component is in a background of user interaction. |

**Dependent Claim 58**

| | |
|---|---|
| **58** | The non-transitory computer-readable storage medium recited in claim 1, wherein determine whether the service usage activity comprises a background activity comprises determine whether content associated with the service usage activity is in a foreground of a user interface of the wireless end-user device. |

**Dependent Claim 59**

| | |
|---|---|
| **59** | The non-transitory computer-readable storage medium recited in claim 1, wherein determine whether the service usage activity comprises a background activity comprises determine whether the first software component is active. |

**Dependent Claim 60**

| | |
|---|---|
| **60** | The non-transitory computer-readable storage medium recited in claim |

| | |
|---|---|
| | 1, wherein apply the policy comprises at least assist in allowing, restricting, delaying, throttling, or preventing the service usage activity. |

**Dependent Claim 63**

| | |
|---|---|
| **63** | The non-transitory computer-readable storage medium recited in claim 1, wherein apply the policy comprises at least assist in preventing an update associated with the first software component. |

**Dependent Claim 64**

| | |
|---|---|
| **[64a]** | The non-transitory computer-readable storage medium recited in claim 1, wherein the one or more prospective or successful communications over the wireless network comprise one or more Internet protocol (IP) address requests, and |
| **[64b]** | wherein apply the policy comprises at least assist in withholding, delaying, time-windowing, reducing in frequency, or aggregating at least a portion of the service usage activity. |

**Dependent Claim 155**

| | |
|---|---|
| **155** | The non-transitory computer-readable storage medium recited in claim 1, wherein the user input obtained through the user interface of the wireless end-user device is a first user input, and wherein the policy is a first policy, and wherein the first user input or a second user input comprises a directive to apply a second policy to a second software component of the plurality of software components on the wireless end-user device. |

**Dependent Claim 156**

| | |
|---|---|
| **156** | The non-transitory computer-readable storage medium recited in claim 1, wherein the user input obtained through the user interface of the wireless end-user device is a first user input, and wherein the first user input or a second user input comprises a directive to refrain from applying the policy to a second software component of the plurality of software components on the wireless end-user device. |

**Dependent Claim 157**

| | |
|---|---|
| **157** | The non-transitory computer-readable storage medium recited in claim |

| | |
|---|---|
| | 1, wherein the user input obtained through the user interface of the wireless end-user device comprises a directive to apply the policy to a second software component of the plurality of software components on the wireless end-user device. |

**Dependent Claim 160**

| | |
|---|---|
| **160[a]** | The non-transitory computer-readable storage medium recited in claim 1, wherein the service usage activity is a first service usage activity, and wherein the wireless network is a first wireless network, and wherein, when executed by the one or more processors of the wireless end-user device, the machine-executable instructions further cause the one or more processors to: |
| **160[b]** | identify a second service usage activity of the wireless end-user device, the second service usage activity being associated with the first software component or with a second software component of the plurality of software components on the wireless end-user device, the second service usage activity comprising one or more prospective or successful communications over a second wireless network; and<br><br>refrain from applying the policy to the second service usage activity. |

**Dependent Claim 161**

| | |
|---|---|
| **[161a]** | The non-transitory computer-readable storage medium recited in claim 1, wherein the service usage activity is a first service usage activity, and wherein the background activity is a first background activity, and wherein the wireless network is a first wireless network, and wherein the policy is a first policy, and wherein, when executed by the one or more processors of the wireless end-user device, the machine-executable instructions further cause the one or more processors to: |
| **[161b]** | identify a second service usage activity of the wireless end-user device, the second service usage activity being associated with the first software component or with a second software component of the plurality of software components on the wireless end-user device, the second service usage activity comprising one or more prospective or successful communications over a second wireless network; and |
| **[161c]** | determine whether the second service usage activity is a second background activity; |

| | |
|---|---|
| **[161d]** | if it is determined that the second service usage activity is the second background activity, apply a second policy to the second service usage activity. |

**Dependent Claim 162**

| | |
|---|---|
| **162** | The non-transitory computer-readable storage medium recited in claim 161, wherein the first policy restricts or prevents the first background activity, and wherein the second policy allows the second background activity. |

**Dependent Claim 163**

| | |
|---|---|
| **[163a]** | The non-transitory computer-readable storage medium recited in claim 1, wherein the service usage activity is a first service usage activity, and wherein the wireless network is a first wireless network, and wherein the policy is a first policy, and wherein, when executed by the one or more processors of the wireless end-user device, the machine-executable instructions further cause the one or more processors to: |
| **[163b]** | identify a second service usage activity of the wireless end-user device, the second service usage activity being associated with the first software component or with a second software component of the plurality of software components on the wireless end-user device, the second service usage activity comprising one or more prospective or successful communications over a second wireless network; and |
| **[163c]** | apply a second policy to the second service usage activity. |

**Dependent Claim 164**

| | |
|---|---|
| **164** | The non-transitory computer-readable storage medium recited in claim 163, wherein the second policy comprises a control policy, a notification policy, or an accounting policy associated with the first software component or the second software component. |

**Dependent Claim 165**

| | |
|---|---|
| **[165a]** | The non-transitory computer-readable storage medium recited in claim 1, wherein the service usage activity is a first service usage activity, and wherein the one or more prospective or successful communications over |

| | |
|---|---|
| | the wireless network are first one or more prospective or successful communications over the first wireless network, and wherein the background activity is a first background activity, and wherein the user input obtained through the user interface of the wireless end-user device is a first user input, and wherein, when executed by the one or more processors of the wireless end-user device, the machine-executable instructions further cause the one or more processors to: |
| **[165b]** | identify a second service usage activity of the wireless end-user device, the second service usage activity being associated with a second software component of the plurality of software components on the wireless end-user device, the second service usage activity comprising second one or more prospective or successful communications over the wireless network; |
| **[165c]** | determine whether the second service usage activity is a second background activity; and<br><br>if it is determined that the second service usage activity is the second background activity, apply at least a portion of the policy, wherein the at least a portion of the policy is based on a second user input. |

**Dependent Claim 166**

| | |
|---|---|
| **[166a]** | The non-transitory computer-readable storage medium recited in claim 1, wherein the service usage activity is a first service usage activity, and wherein the one or more prospective or successful communications over the wireless network are first one or more prospective or successful communications over the wireless network, and wherein, when executed by the one or more processors of the wireless end-user device, the machine-executable instructions further cause the one or more processors to: |
| **[166b]** | identify a second service usage activity of the wireless end-user device, the second service usage activity being associated with a second software component of the plurality of software components on the wireless end-user device, the second service usage activity comprising second one or more prospective or successful communications over the wireless network; |
| **[166c]** | determine whether the second service usage activity is the background activity; and |
| **[166d]** | if it is determined that the second service usage activity is the background activity, refrain from applying at least a portion of the policy. |

**Dependent Claim 167**

| | |
|---|---|
| **[167a]** | The non-transitory computer-readable storage medium recited in claim 1, wherein the background activity is a first background activity, and wherein the service usage activity is a first service usage activity, and wherein the one or more prospective or successful communications over the wireless network are first one or more prospective or successful communications over the wireless network, and wherein the policy is a first policy, and wherein, when executed by the one or more processors of the wireless end-user device, the machine-executable instructions further cause the one or more processors to: |
| **[167b]** | identify a second service usage activity of the wireless end-user device, the second service usage activity being associated with a second software component of the plurality of software components on the wireless end-user device, the second service usage activity comprising second one or more prospective or successful communications over the wireless network; |
| **[167c]** | determine whether the second service usage activity is a second background activity; |
| **[167d]** | obtain a second policy, the second policy to be applied when the second service usage activity is the second background activity, the second policy for controlling the second service usage activity; and |
| **[167e]** | if it is determined that the second service usage activity is the second background activity, apply the second policy. |

**Dependent Claim 168**

| | |
|---|---|
| **168** | The non-transitory computer-readable storage medium recited in claim 167, wherein the first policy, the second policy, or both are based on a network busy state, a network availability state, or a cost associated with the wireless network. |

**Dependent Claim 169**

| | |
|---|---|
| **[169a]** | The non-transitory computer-readable storage medium recited in claim 1, wherein the service usage activity is a first service usage activity, and wherein the one or more prospective or successful communications over the wireless network are first one or more prospective or successful communications over the wireless network, and wherein, when executed by the one or more processors of the wireless end-user device, the machine-executable instructions further cause the one or more processors to: |

| | |
|---|---|
| **[169b]** | identify a second service usage activity of the wireless end-user device, the second service usage activity being associated with the first software component, the second service usage activity comprising second one or more prospective or successful communications over the wireless network; |
| **[169c]** | determine whether the second service usage activity is the background activity; and<br><br>if it is determined that the second service usage activity is the background activity, apply at least a portion of the policy. |

**Dependent Claim 170**

| | |
|---|---|
| **170** | The non-transitory computer-readable storage medium recited in claim 1, wherein, when executed by the one or more processors of the wireless end-user device, the machine-executable instructions further cause the one or more processors to monitor the service usage activity, account for the service usage activity, report information about the service usage activity, or a combination of these. |

**Dependent Claim 171**

| | |
|---|---|
| **171** | The wireless end-user device embodying the non-transitory computer-readable storage medium recited in claim 1. |

# I. INTRODUCTION

Petitioners request IPR of claims 1-23, 26, 41-60, 63-64, 155-157, and 160-171 of U.S. Patent No. 8,589,541.

# II. STANDING

Petitioners are not barred or estopped from requesting IPR on these grounds.

# III. RELIEF REQUESTED

| Grounds | |
|---|---|
| 1 | Rao anticipates and/or renders obvious claims 1, 3-6, 8-23, 26, 45, 49-50, 58-60, 64, 157, 165, 169, and 171. |
| 2 | Rao in view of Fadell renders obvious claims 1, 2, 7, 41-43, 46, 63, 155-156, 160-164, 166-168, and 170. |
| 3 | Rao in view of Freund renders obvious claims 44, 47-48, and 51-57. |

# IV. THE '541 PATENT

## A. Overview

The '541 patent discloses "differentially controlling . . . network service usage activities" based on "the type of service activity requesting network access." EX-1001, 15:13-18. A service usage control policy is applied "to protect network capacity." *Id.*, 18:8-19:58. If a service usage activity is classified as a background activity, the control policy may assign it a priority. *Id.*, 18:8-20:43.

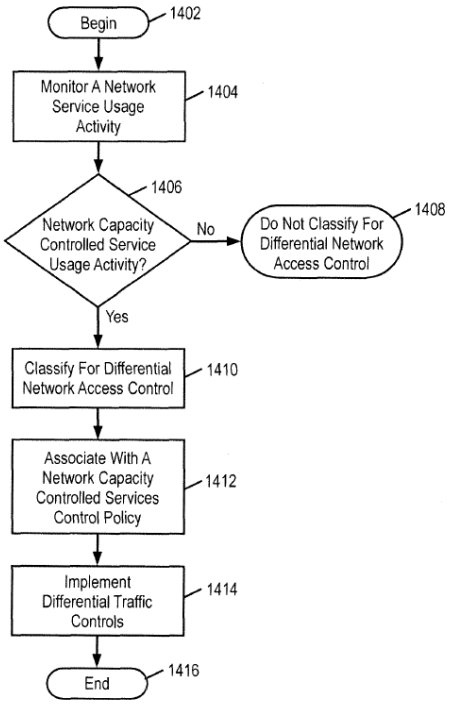


FIG. 14

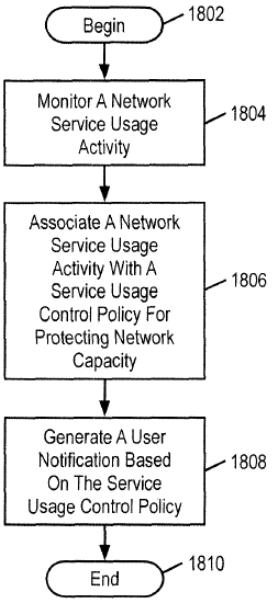


FIG. 18

*Id.*, Figs. 14, 18.

### B. Prosecution History

The original claims were rejected. EX-1006, 192-214, 579-84. The applicant rewrote the independent claim and added 173 new dependent claims. *Id.*, 647-701. With an Examiner's amendment, the Examiner allowed all 174 claims. *Id.*, 744-56.

### C. POSITA

A POSITA at the time of the invention would have at least a bachelor's degree in computer science, computer engineering, or a similar field, and approximately two years of industry or academic experience in a field related to computer software development and/or computer networking. EX-1015 ¶¶50-52. Work experience can

substitute for education, and additional education can substitute for work experience. *Id.*

## V. CLAIM CONSTRUCTION

No terms require construction to resolve this Petition.

## VI. PRIOR ART

### A. Rao

Rao discloses remote access client 120 that intercepts inbound or outbound network packets associated with applications of client 105. Rao ¶¶38-43, 99-110, 184-86. Intercepted packets are queued according to priority policies. *Id.* ¶¶38-46, 80, 184-94. Rao prioritizes by criteria, including by application and whether the application is "running in the foreground or the background." *Id.* ¶¶182, 188-93.

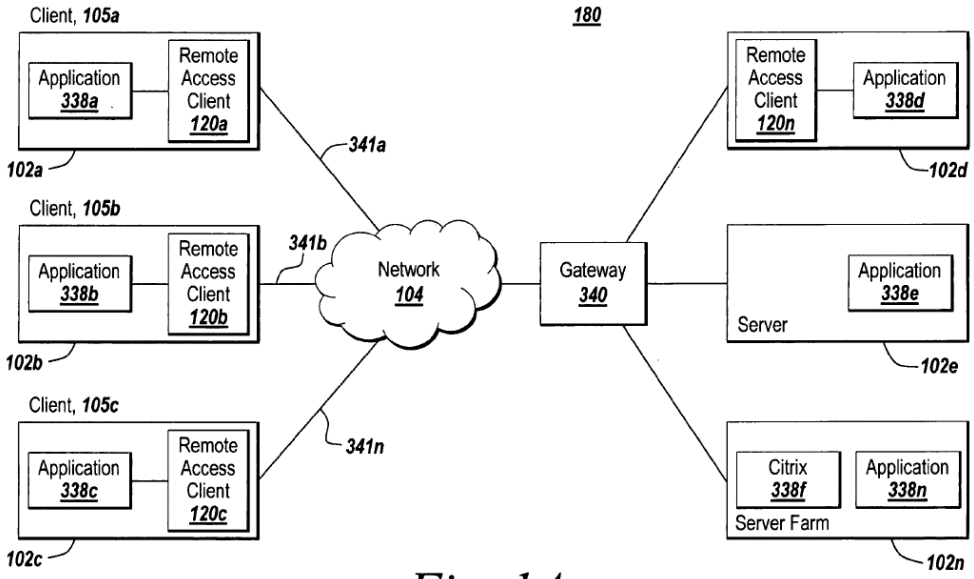


*Fig. 1A*

*Id.*, Fig. 1A.

Rao describes some of its disclosures as "embodiments," but invites a POSITA to combine them. *Id.* ¶¶218-19; *id.* ¶¶74, 131. A POSITA would have therefore understood Rao to disclose various aspects of a single system. EX-1015 ¶¶56-59. A POSITA also would have been motivated and found it obvious to combine Rao's "embodiments" in view of Rao's express invitation and taught benefits. *Id.*

**B. Fadell**

Fadell discloses controlling network usage. Fadell ¶¶16-17. Resource utilization component 110 monitors "utilization," provides alerts, and "performs utilization shifting" to manage data/bandwidth consumption. *Id.*

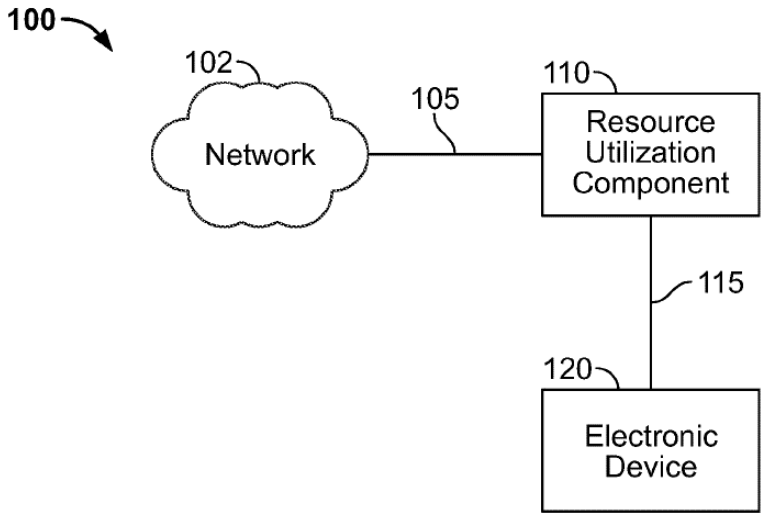


**FIG. 1**

*Id.*, Fig. 1.

Fadell gives users notices, including the following, providing service plan information and options to purchase resources, limit use, and/or switch networks. *Id.* ¶¶17-29, 50-70.

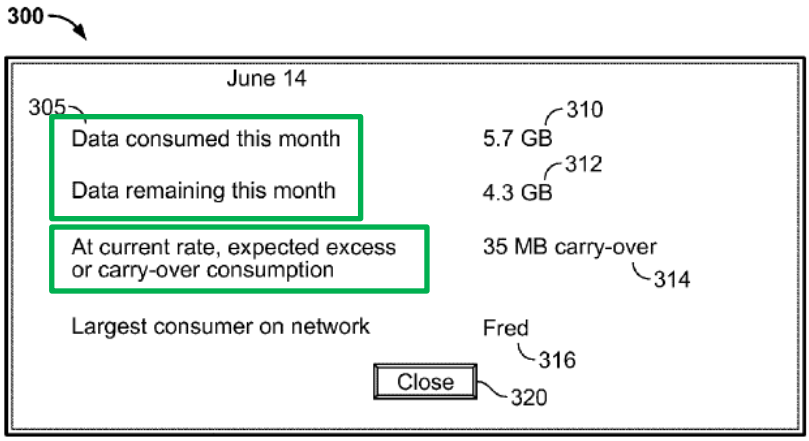


**FIG. 3**

*Id.*, Fig. 3 (annotated).

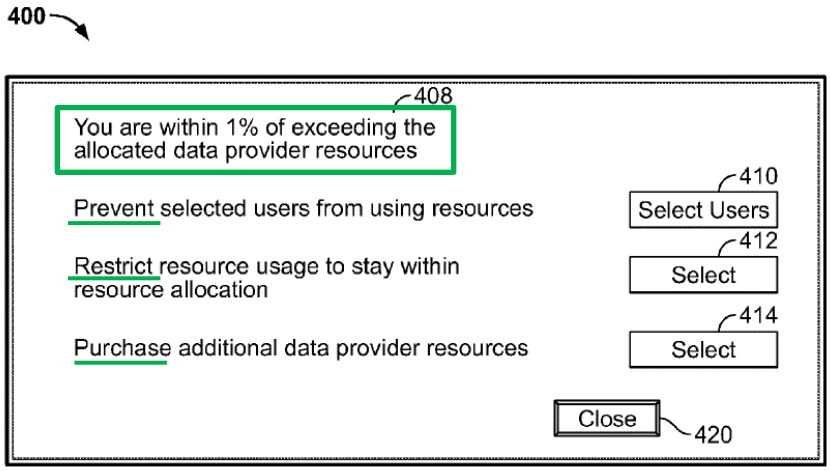


**FIG. 4**

*Id.*, Fig. 4 (annotated).

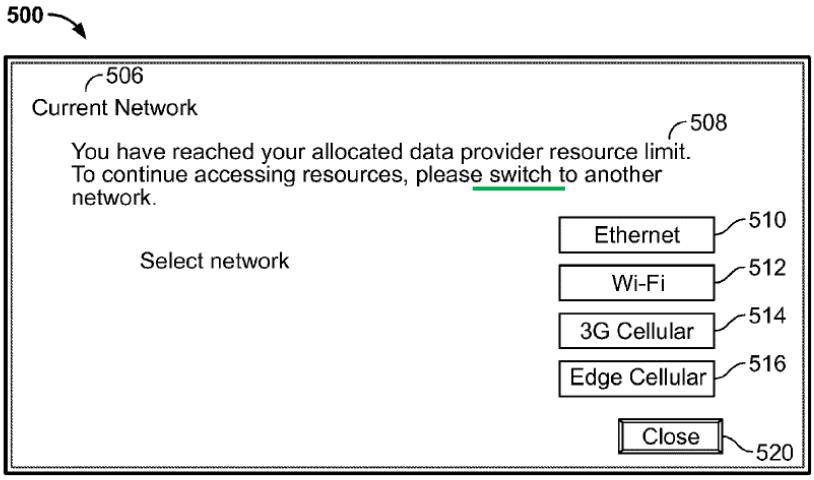


FIG. 5

*Id.*, Fig. 5 (annotated).

### C. Freund

Freund's client monitor application 311 intercepts, monitors, logs, and filters network communications associated with applications. Freund, 1:58-3:59, 13:23-15:30. Access rules with specified application criteria govern Internet access. *Id.*, 3:60-4:28. The monitor restricts rule-violating network traffic by, e.g. "denying Internet access" or "issu[ing] a warning." *Id.*, 4:26-5:64, 19:57-60, 21:12-20.

## VII. Ground 1: Rao Anticipates and/or Renders Obvious Claims 1, 3-6, 8-23, 26, 45, 49-50, 58-60, 64, 157, 165, 169, and 171

Rao anticipates most of the limitations discussed under this Ground for the reasons provided below. Rao renders these same limitations obvious for the same reasons. Rao also renders obvious the remaining limitations discussed under this Ground.

## A. Claim 1

### 1. [1a] "A non-transitory computer-readable storage medium storing machine-executable instructions that, when executed by one or more processors of a wireless end-user device, cause the one or more processors to:"

To the extent the preamble is limiting, Rao discloses "computing device 102" of client 105 ("wireless end-user device") that includes a non-volatile "main memory unit" ("non-transitory computer-readable storage medium") and a "central processing unit" ("one or more processors"). Rao ¶¶118-25, 99-100, 130, 79-116, 83-84, Figs. 1A-1E. Computing device 102 includes storage device 128 storing remote access client software 120. *Id.* ¶124, Fig. 1D. Rao's memory and/or storage device stores instructions the CPU executes. *Id.* ¶¶116, 119, 124; EX-1015 ¶¶68-73.

### 2. [1b] "identify a service usage activity of the wireless end-user device, the service usage activity being associated with a first software component of a plurality of software components on the wireless end-user device,"

Rao discloses service usage activity: network packets communicated via network 104, which may be a wireless network. Rao ¶¶41-46, 52, 101-16; EX-1015 ¶¶74-75, 83; *also* EX-1001, 19:8-37. The network packets are associated with "a first software component" of many: "***one or more applications 338a-338n***, which access the network 104" and provide "real-time data communications." Rao ¶¶179-95, 87-91; EX-1015 ¶77. Each application is or includes a software component on the wireless end-user device. Rao ¶¶184, 188; EX-1015 ¶76.

Rao discloses identifying a service usage activity associated with the software components because it teaches "intercepting" the network packets, "storing" the network packets, and "inspecting" the network packets to associate an application with the network packets. EX-1015 ¶78.

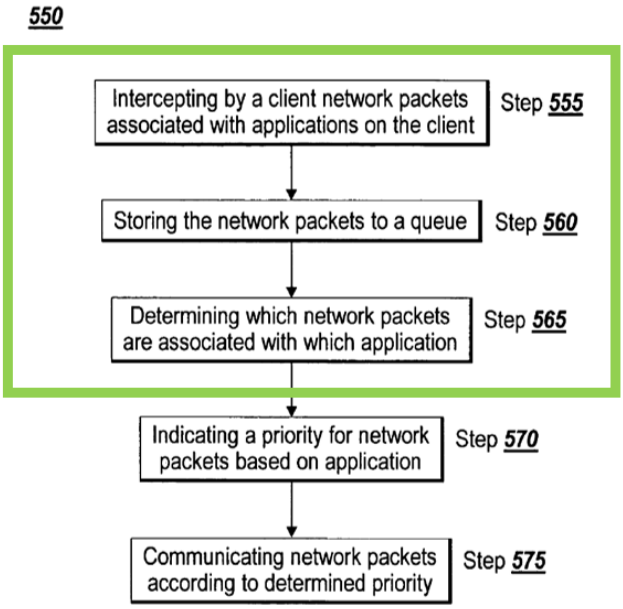


*Fig. 5B*

Rao, Fig. 5B (annotated).

Filter 322 "***intercept[s]*** any of the network traffic . . . such as network packets associated with the application 338" to route the packets. *Id.* ¶¶99, 101-16, 179-81, Fig. 1C, 5A; EX-1015 ¶¶78-79.

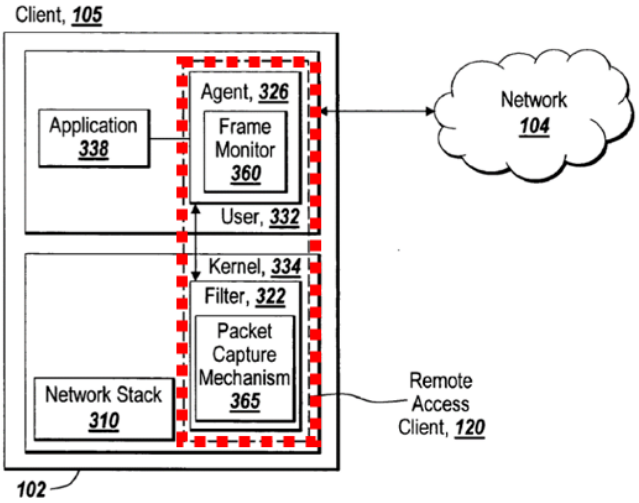


*Fig. 1C*

Rao, Fig. 1C (annotating remote access client 120).

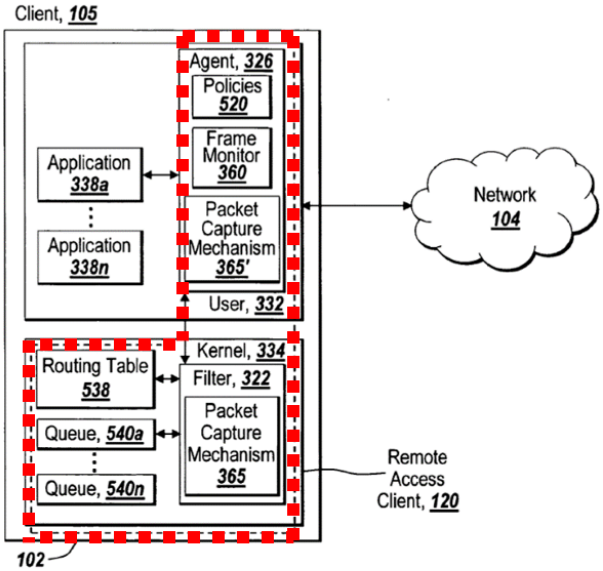


*Fig. 5A*

*Id.*, Fig. 5A (annotating remote access client 120).

Rao further ***stores*** intercepted packets in a queue, *id.* ¶¶186, 180-84, 191-93, Fig. 5C, and filter 322 "can ***inspect*** the contents of the packets" to, e.g., identify the

network or verify the application(s) that generated the packets, *id.* ¶¶102-07, 186-87; EX-1015 ¶¶80-82. Based on this inspection, "agent 326 identifies the network packet as generated from an application 338*a*-338*n* by any of the content of the network packet" (e.g., "headers, fields, or the type and content of data"). Rao ¶187. Agent 326 may inspect the packet and "verify that the identified application actually generated the packet." *Id.* ¶187; *id.* ¶¶105-09, 187. Agent 326 may associate the packet "with an application 338*a*-338*n* by matching information from the routing table 538." *Id.* ¶187; EX-1015 ¶81. Rao teaches "indicating" a priority for the packets based on the associated application (step 570), confirming that they are identified as claimed. Rao, Fig. 5B; EX-1015 ¶82.

Intercepting, storing, and inspecting a network packet is (or requires) identifying the network packet; this understanding is consistent with the '541 patent. *E.g.*, EX-1001, 69:5-35, 70:57-71:3, 72:22-28, 87:54-65, 96:66-97:54, Figs. 14, 18, claims 8, 17 (describing similar activities, e.g., "packet inspection" as "identifying"); EX-1015 ¶82.

#### 3. [1c] "the service usage activity comprising one or more prospective or successful communications over a wireless network;"

Rao's network packets disclose "service usage activity comprising . . . communications over a wireless network."

Remote access client 120 intercepts in-and-outbound network traffic associated with applications 338*a*-338*n* of client 105, which is "connected to network 104." Rao ¶¶110, 179-80, 185 ("obtain inbound and/or outbound packets of the client 105, such as the network traffic associated with application 338"); *id.* ¶¶125, 195 (describing wireless interfaces/connections).

Rao's intercepting, inspecting, and/or storing packets in queues ***before*** communicating them from the queues discloses identifying one or more ***prospective*** communications. *Id.* ¶¶184-86, 105, 110-11, 180, 194-95; EX-1015 ¶¶84-86.

Intercepting "inbound . . . [packets] . . . associated with application 338" discloses identifying one or more ***successful*** communications over a wireless network. Rao ¶184; EX-1015 ¶86. Communicating outbound network packets from the queues also discloses successful communications. Rao ¶¶189-95, Figs. 1A-C, 5A; EX-1015 ¶86.

#### 4. [1d] "determine whether the service usage activity comprises a background activity;"

After intercepting, Rao's remote access client 120 "***determines*** the association of network packets with applications 338*a*-338*n* in order to determine priorities and apply any priority based policies 520." Rao ¶187; EX-1015 ¶87. This includes "***determin[ing]*** whether the application 338*a*-338*n* associated with the network packet is running in the foreground or the background of the client 105." Rao ¶¶188,

38-41, 182. This determination is made during step 565, when network packets are associated with an application. *Id.* ¶¶187-88; EX-1015 ¶¶87-88.

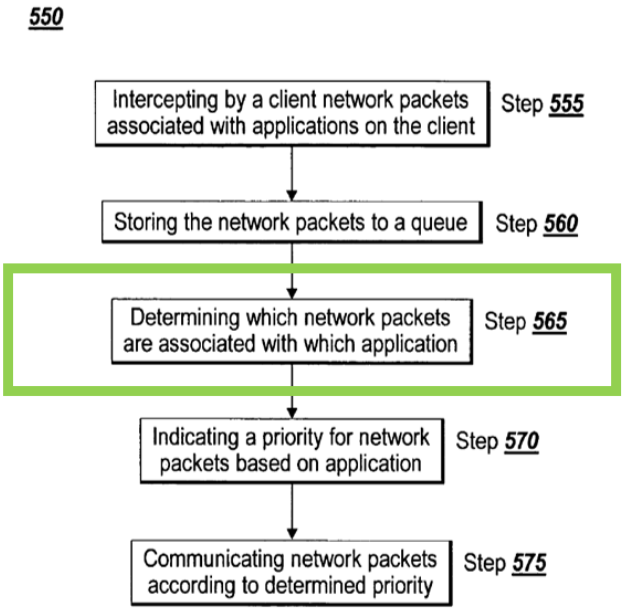


*Fig. 5B*

Rao, Fig. 5B (annotated).

By determining whether network packets are associated with an application "running in the background," Rao determines whether the associated service usage activity "comprises a background activity," *id.* ¶¶41, 188, and therefore determines whether the service usage activity associated with a first software component comprises a background activity, EX-1015 ¶89.

Determining whether an activity is a background activity was well known, as Rao discloses, and the methodology for making that determination would have been

a simple design choice among finite, known options, for which a POSITA would have had a reasonable expectation of success. *Id.* ¶90.

#### 5. [1e] "determine at least an aspect of a policy based on a user input obtained through a user interface of the wireless end-user device or based on information from a network element,"

Rao discloses remote access client 120 may include "***one or more policies 520*** [a policy] for specifying client-side prioritization of network communications related to applications 338*a*-338*n*." Rao ¶182. Rao's prioritization is a policy, and the specific priority assigned to intercepted packets is an aspect of that policy. EX-1015 ¶¶91-92, 95; Rao ¶¶38-43, 180, 182.

Policies 520 may be "provided by or downloaded [to agent 326] ***via the gateway 340***" (a network element) over network 104. Rao ¶183; *id.* ¶¶87, 90-96 ("communicat[ing] over the network 104 to the gateway 340"). Accordingly, the policy would be based on information from a network element. EX-1015 ¶93.

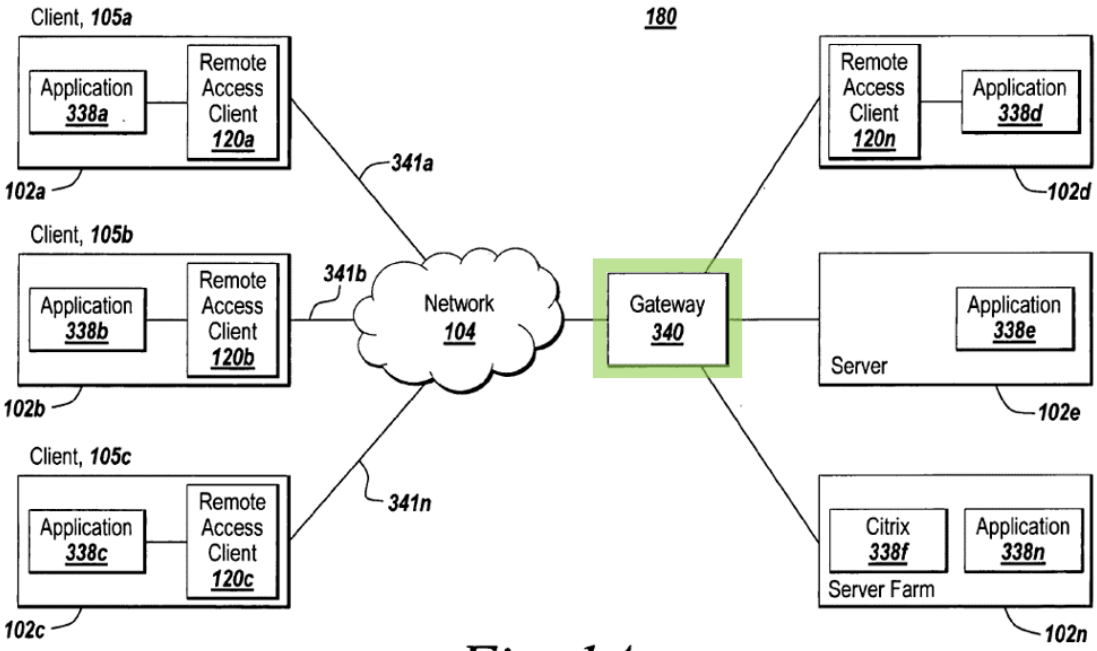


*Fig. 1A*

Rao, Fig. 1A (annotated).

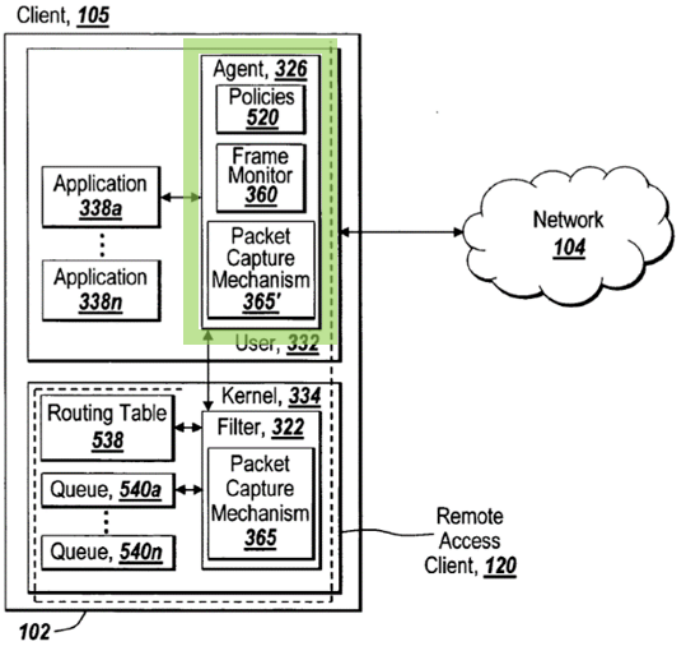


*Fig. 5A*

*Id.*, Fig. 5A (annotated).

Further, a user may "configur[e]" an aspect of a policy through "***a user interface, graphical or otherwise, design[ed] and constructed for configuring or specifying the policies 520***." *Id.* ¶183; EX-1015 ¶94.

If Rao does not expressly disclose determining at least an aspect of the policy, Rao renders this obvious. Rao emphasizes prioritization on an application-by-application basis, Rao ¶¶182, 191, and a POSITA would therefore have been motivated to obtain information from the network or the user to determine the prioritization to be applied (both generally and to the specific application and associated packets) to implement the system as Rao suggests, EX-1015 ¶96; Rao ¶184.

#### 6. [1f] "the policy to be applied if the service usage activity is the background activity, the policy at least for controlling the service usage activity; and"

Rao's policies 520 may "define [packet] prioritization based on ***whether*** an application is running in the ***foreground or the background***." Rao ¶¶182, 188-89, 40-42, 193 ("packets may be further prioritized by the ***characteristic of the application*** . . . , e.g., a ***foreground application***"). "The policies 520 may be specified ***conditionally***," so that no policy applies to some packets, and packets associated with different applications may have higher or lower priority. *Id.* ¶¶182, 193; EX-1015 ¶¶97-99.

Rao therefore discloses conditional policies based on whether the application (and, as a POSITA would have understood, its associated network communication/service usage activity) is background activity. EX-1015 ¶100. By defining prioritization based on whether an application is running in the background (e.g., assigning specific priority to the service usage activity associated with the application), Rao discloses its policy is to be applied if the service usage activity is the background activity. *Id.* The policy "controls" the service usage activity by prioritizing and communicating the packets "according to the determined priority." Rao ¶¶189-95, 40-41, Fig. 5B (steps 570, 575); EX-1015 ¶¶100-01.

Alternatively, these disclosures at least render obvious applying prioritization (the policy) to queued packets "if" they are associated with background applications such as background service usage activity (e.g., for remote access client 120 to focus on deprioritizing background applications associated with background service usage activity). Rao ¶¶182, 188-89, 193, 40-42; EX-1015 ¶¶102-03. This would have improved Rao and furthered its objectives of, e.g., reducing network congestion, improving bandwidth available to foreground applications, and improving system speed/efficiency by assigning background activity, including unnecessary/unwanted/unknown activity, a lower priority than actively used applications. Rao ¶¶3, 80, 184; EX-1015 ¶¶104-05.

### 7. [1g] "if it is determined that the service usage activity is the background activity, apply the policy."

Rao assigns priority to network packets associated with background activity (service usage activity determined to be background activity) and transmits those packets according to that priority, thus applying the policy. EX-1015 ¶¶106-09.

"[A]gent 326 uses the policies 520 to ***apply a priority*** to network packets of applications 338*a*-338*n* in accordance with the prioritization rules specified or indicated by the policies 520," including those based on "characteristics . . . such as running in the foreground or ***background***, to indicate priority for a network packet of the application." Rao ¶189, Fig. 5 (Step 570). Agent 326 then "indicates the priority to the filter 322 . . . ***to apply*** the indicated priorities." *Id.* ¶¶189-93; EX-1015 ¶108. The packets are communicated "according to the determined priorities." Rao ¶¶194-95, Fig. 5 (Step 575); EX-1015 ¶108.

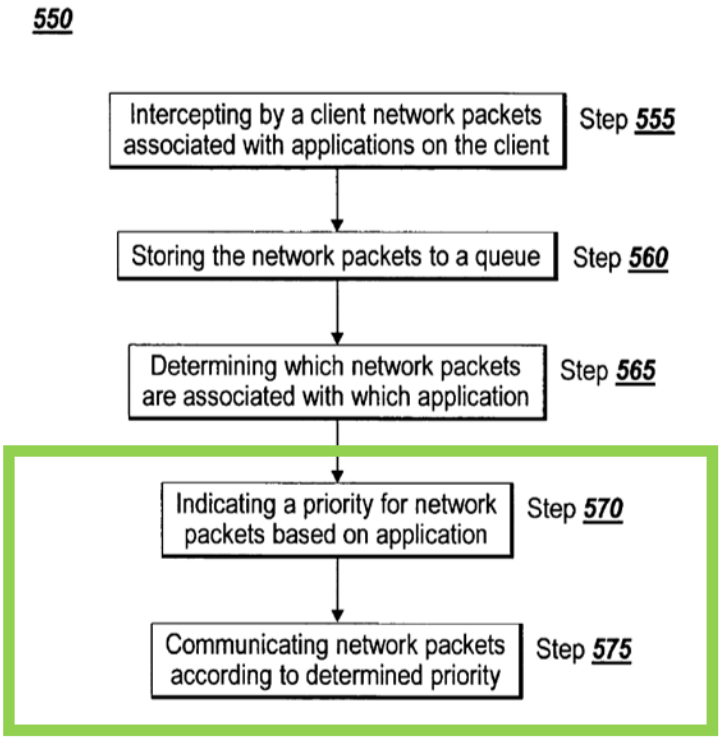


*Fig. 5B*

Rao, Fig. 5B (annotated).

At minimum, Rao renders obvious applying a policy ***if*** it is determined the service usage activity is the background activity for the reasons discussed. *Supra* [1f]; EX-1015 ¶110. For example, applying prioritization (e.g., lower priority) to queued packets received from background applications would further Rao's objectives, and a POSITA would have been motivated to do so. *Supra* [1f]; Rao ¶¶3, 80, 184; EX-1015 ¶110.

### B. Claim 3

#### 1. " . . . claim 1, wherein the . . . communications over the wireless network comprise . . . <u>an e-mail</u> . . . ."

Rao discloses "applications 338*a*-338*n* ***may provide email***." Rao ¶¶179, 192 (network packets for "***email*** . . . ***application***" in queue "***for email related applications***"). Rao discloses client 105 communicating via the wireless network with "an application server providing email services such as Microsoft Exchange." *Id.* ¶90. Rao therefore discloses communications "associated with . . . an e-mail," among other claimed items. EX-1015 ¶¶111-14; *also id.* (explaining others).

### C. Claim 4

#### 1. " . . . claim 1, wherein the . . . communications . . . comprise a communication associated with . . . <u>a content download</u>."

Rao's applications 338 may comprise "real-time data communications, such as applications for streaming video and/or audio." Rao ¶88. Applications 338 may also include email applications. *Id.* ¶¶179, 192. Both an email application that, as a POSITA would have recognized, requests and receives emails and email attachments, which would be downloaded, and a streaming video application that receives downloaded video, disclose "a content download." EX-1015 ¶¶115-16. This is consistent with the '541 patent's disclosure of "content." EX-1001, 14:52-15:5, 93:29-45, 94:53-95:37; EX-1015 ¶117.

### D. Claim 5

#### 1. "**. . . claim 1, wherein the . . . communications . . . comprise a communication associated with . . . <u>a video</u> . . . <u>an e-mail attachment</u> . . . [or] <u>a video chat</u> . . . .**"

Rao discloses network traffic may be associated with an email application, *supra* claim 3, which discloses or renders obvious communications associated with "an e-mail attachment." EX-1015 ¶¶118-19. Rao also discloses "applications for ***streaming video*** and/or audio," Rao ¶88, and those offering "***online meeting[s]***," *id.* ¶¶179, 4, 75, 90, 117. A POSITA would have understood these communications to include "a video" and/or "a video chat," as claimed. EX-1015 ¶120.

### E. Claim 6

#### 1. "**. . . claim 1, wherein the . . . communications . . . comprise a communication associated with <u>a device application</u> . . . , <u>a file download</u>, . . . [or] <u>a web browser</u> . . . .**"

Rao's computing device 102/client 105 may be a "mobile telephone," laptop, "handheld computer," or "any other computer[] or other form of computing or telecommunications device." Rao ¶130; *supra* [1a]. Rao's device also includes applications associated with network packets that Rao intercepts, queues, and prioritizes. Rao ¶¶179, 87-91, 180-95. Rao therefore discloses communications associated with a "device application." EX-1015 ¶¶121-22. Rao also discloses communications associated with "a file download," *supra* claims 3-5, and that its applications can be "any type and/or form of ***web browser***," Rao ¶88. Sending and

receiving network packets from a web browser application discloses communication associated with "a web browser." EX-1015 ¶123.

### F. Claim 8

#### 1. "**. . . claim 1, wherein identify a service usage activity . . . comprises identify: <u>an application identifier associated with the service usage activity or the first software component</u> . . . .**"

*Supra* [1b]; EX-1015 ¶124. Identifying a network packet's header, field, and/or the type or content of data that may be associated with background activity discloses an "application identifier" associated with the service usage activity and/or the first software component. EX-1015 ¶125.

### G. Claim 9

#### 1. **[9a] " . . . claim 1, wherein the service usage activity results from cooperation between the first software component and at least one other software component, application, process, function, activity, or service, and"**

Rao discloses or renders obvious [9a]. Client 105 may execute one or more applications that "access the network 104" and "provide . . . real-time data communications," (e.g., "VoIP," "email, collaboration, online meeting, and/or desktop sharing related services or functionality"). Rao ¶¶179, 184, 192; *supra* [1b]-[1c].

Certain of Rao's applications cooperate with other software components, applications, processes, functions, activities, or services. EX-1015 ¶¶126-28. For example, Rao discloses that certain applications are email applications, and that

client 105 communicates across a network with "an application server providing email services such as Microsoft Exchange" to facilitate the provision of email services. Rao ¶¶90, 179, 192. This constitutes a service usage activity resulting from cooperation between the email application on client 105 (e.g., first software component) and the application server ("other," e.g., application/software component/service). *Id.*; EX-1015 ¶129.

### 2. [9b] "wherein identify a service usage activity . . . comprises: identify a data flow to or from the at least one other software component, application, process, function, activity, or service; and associate the data flow with the first software component."

Rao's remote access client 120 intercepts packets sent from an application (e.g., email application) to an application server (e.g., "an application server providing email services such as Microsoft Exchange") and identifies them as associated with the email application. Rao ¶¶90, 179, 192; EX-1015 ¶¶130-32. Rao's remote access client therefore identifies a data flow (network packets) sent from the email application (first software component) to the application server providing email services (the other application/software component) and associates the flow with the email application. Rao ¶¶187, 192; EX-1015 ¶132. To the extent Rao does not expressly disclose this, it would have been obvious based on Rao and a POSITA's knowledge of applications, including email applications. EX-1015 ¶132.

### H. Claim 10

#### 1. " . . . claim 9, wherein the first software component comprises at least a portion of an application, and wherein the at least one other software component, application, process, function, activity, or service performs a proxy function."

As discussed for claim 9, Rao discloses or renders obvious claim 10. EX-1015 ¶133; *supra* claim 9. An email application, as Rao discloses (Claim 9), is at least a portion of an application. EX-1015 ¶¶134-35. An application server that provides email services (e.g., Microsoft Exchange) is an "email service manager," as that term is used in the '541 patent. EX-1001, 76:1; EX-1015 ¶136. Such an application server (i.e., other application/software component) is a "[p]roxy [s]ervice [m]anager," as that term is used in the '541 patent, and it accordingly performs proxy service functions as claimed. EX-1001, 75:56-76:9 ("Example Proxy Service Managers include . . . email service manager"); EX-1015 ¶137.

### I. Claim 11

#### 1. " . . . claim 9, wherein the at least one other software component, application, process, function, activity, or service performs a proxy function."

*Supra* claim 10; EX-1015 ¶138.

### J. Claim 12

#### 1. " . . . claim 9, wherein the at least one other software component, application, process, function, activity, or service comprises . . . , <u>an e-mail service manager</u> . . . ."

*Supra* claim 10; EX-1015 ¶¶139-40.

## K. Claim 13

### 1. [13a] " . . . claim 1, wherein identify a service usage activity . . . comprises: monitor an application proxy service flow; and"

As explained for claim 10, an application server providing email services (e.g., Microsoft Exchange) is a "[p]roxy [s]ervice [m]anager." EX-1001, 75:56-76:9; *supra* claim 10. A POSITA would have understood that network packets communicated from Rao's email application to an application server to facilitate email services form a data flow from an application to a proxy service manager and thus constitute an "application proxy service flow." EX-1015 ¶¶141-43. And Rao's "identifying" (e.g., intercepting, inspecting, and associating network packets with their originating applications) constitutes or involves "monitoring" those packets (i.e., the application proxy service flow, in the case of an email application). Rao ¶¶187, 185, 104, 109, 193; *supra* [1b]; EX-1015 ¶144.

### 2. [13b] "classify the application proxy service flow as being initiated by or belonging to the first software component."

Rao's remote access client identifies network packets' associated application (e.g., an email application) by inspecting the network packets' content, Rao ¶187; *id.* ¶¶109, 193; *supra* [1b], which discloses identifying packets flowing from an email application to an application server (e.g., Microsoft Exchange) that provides email services ("application proxy service flow"), EX-1015 ¶145. Rao therefore

discloses identifying network packets as generated by (initiated by or belonging to) an email application. *Supra* [9b]; EX-1015 ¶146.

By "determin[ing] the association of network packets with applications 338*a*-338*n*," remote access client 120 "classif[ies]" the network packets as belonging to, e.g., an email application. *Supra* [1d], [1f]-[1g]; Rao ¶187; EX-1015 ¶147. This allows the system to determine whether the packets are associated with background activities and permits proper prioritization. EX-1015 ¶147.

### L. Claim 14

#### 1. [14a] " . . . claim 1, wherein identify a service usage activity . . . comprises: associate an identifier identifying the first software component with a request to a proxy service;"

In the case of Rao's email application and "application server providing email services," *supra* claim 9, an application server is a "[p]roxy [s]ervice [m]anager," *supra* claim 10, and the email services the application server provides are "proxy services," *supra* claim 10; EX-1015 ¶¶148-49. The client-side email application would communicate with the application server (e.g., send a "request to a proxy service"), and the packets sent per that request would be a service usage activity. EX-1015 ¶150.

Rao's outgoing network packets, including those comprising requests to the proxy service, are associated with an identifier identifying the application (e.g., an email application). *Id.* ¶¶151-52. Agent 326 "can ***associate*** network traffic with

applications 338*a*-338*n*," including by identifying "any of the content of the network packet, such as ***any headers, fields, or the type and content of data*** in the payload of the network packet." Rao ¶187. Rao also associates a network packet with an application by matching information from a routing table 538, including "***the IP addresses and ports numbers*** of the network packet." *Id.*; *id.* ¶181 (source/destination IP addresses represent client/computing device by/to which application communicates on the network). EX-1015 ¶151.

Rao therefore discloses associating an identifier (e.g., a packet's header, field, or content or an IP address or port number) identifying the first software component (e.g., an email client) with a request to a proxy service (e.g., a request to Microsoft Exchange). *Id.* ¶152.

#### 2. [14b] "associate the request to the proxy service with a traffic flow, the traffic flow comprising the service usage activity; and"

Rao discloses or renders obvious [14b]. Rao discloses that "packets for a type of application 338*a*-338*n*, such as an email . . . may be placed in a queue 540*a*-540*n* for prioritizing network[] packets for one or more applications." Rao ¶192; *supra* [14a], claim 10. Similarly, "online collaboration related applications 338*a*-338*n* may be placed and prioritized in a first queue 540[,] . . . [and a] second queue 540*b* may be used for email related applications 338*a*-338*n*." Rao ¶192. Rao thus associates a request to the proxy service with a traffic flow by identifying and queuing email-

related packets (which correspond to service usage activities of email applications) into a queue for email applications to an email exchange server. *Id.*; *also id.* ¶184; *supra* [14a], claim 10; EX-1015 ¶¶153-56.

### 3. [14c] "associate the traffic flow with the identifier."

Rao discloses or renders obvious [14c]. Rao explains that traffic flows (e.g., network packets to/from, e.g., the email client and email application server) are associated with identifiers. *Supra* [14a], claim 10; Rao ¶¶187, 109, 193; EX-1015 ¶¶157-58. Remote access client 120 may "identif[y] . . . network packet[s] as generated from an application" (e.g., an email application) by inspecting the packets' content. Rao ¶¶187, 109, 193; *supra* [1b], [14a]. It may "match[] information from routing table 538, such as source and destination IP addresses," "with the IP addresses . . . of the network packet[s]," which together form the traffic flow. Rao ¶187. By identifying the packets in the traffic flow associated with the email application's communications with the application server (e.g., Microsoft Exchange) using routing table 538, Rao's remote access client associates the traffic flow with the source and/or destination IP addresses associated with the email application (the identifier). EX-1015 ¶¶159-60.

### M. Claim 15

#### 1. " . . . claim 14, wherein the identifier comprises . . . a credential."

Rao discloses or renders obvious claim 15. Rao's identifier includes an IP address and/or port number, which the '541 patent describes as device credentials. Rao ¶¶181, 187; *supra* [14a]-[14c]; EX-1001, 28:59-61 ("device credentials (e.g., . . . IP address)"); EX-1015 ¶¶161-63.

### N. Claim 16

#### 1. [16a] " . . . claim 1, wherein the service usage activity results from cooperation between the first software component and a proxy function, and"

Rao's email application communicating with an application server providing email services (e.g., Microsoft Exchange) constitutes a service usage activity resulting from cooperation between the email application (e.g., the first software component) and the proxy service functions provided by the application server (which performs proxy functions as network packets are sent from the email application to the application server). *Supra* [9a], claim 10; EX-1015 ¶¶164-65.

#### 2. [16b] "wherein identify a service usage activity . . . comprises: identify a data flow to or from the proxy function; and associate the data flow with the first software component."

Because the application server providing email services (e.g., Microsoft Exchange) performs proxy functions, *supra* claim 10, Rao's remote access client identifies a data flow to or from the proxy function and associates the data flow with

the first software component (e.g., the email application). *Supra* [9b], [16a]; EX-1015 ¶¶166-67.

### O. Claim 17

#### 1. "**. . . claim 1, wherein identify a service usage activity . . . comprises identify the service usage activity based on . . . <u>a destination</u>, <u>a port</u>, [or] <u>a packet inspection</u> . . . .**"

Rao discloses that filter 322 of packet capture mechanism 365 can "***inspect the contents of the packets***, such as routing information, to determine the action to take based on the filtering table." Rao ¶¶102, 105-09. Agent 326 "identifies the network packet [service usage activity] . . . by any of the ***content of the network packet***, such as any headers, fields, or the type and content of data." *Id.* ¶187; EX-1015 ¶¶168-69. Identification may also be via matching routing table 538's "source and ***destination IP addresses*** and ***ports numbers*** with the IP addresses and ***ports numbers*** of the network packet." Rao ¶187. Routing table 538 includes "information about . . . a ***destination*** computing device," including "***source port***, and . . . ***destination port*** to identify a communication path." *Id*. ¶¶181-82, 187, 190, 192; EX-1015 ¶170.

### P. Claim 18

#### 1. "... claim 1, wherein identify a service usage activity ... comprises determine <u>an identifier associated with the first software component</u> ...."

*Supra* claim 17. Rao determines an identifier (e.g., "headers, fields, or the type and content of data in the payload") by inspecting the packets. Rao ¶187; EX-1015 ¶¶171-72. And Rao explains this inspection allows it to "associate network traffic" with the applications, confirming the identifiers are associated with the first software component. Rao ¶187; EX-1015 ¶¶172-73.

### Q. Claim 19

#### 1. "... claim 1, wherein the first software component comprises at least a portion of an application on the wireless end-user device."

Rao's applications disclose this. Rao ¶¶179, 87-91, 180-95; *supra* [1b]; EX-1015 ¶¶174-75.

### R. Claim 20

#### 1. "... claim 1, wherein the first software component comprises an operating system component, function, or service."

Rao discloses "computing device 102 (herein also referred to as a client 105) ha[s] an operating system." Rao ¶¶99, 106, 124, 128-29. Rao thus discloses or renders obvious an application that includes an OS function, component, or service with associated service usage activity. For example, one common function, component, or service of an OS is an OS update or auto-update. *E.g.*, Fadell ¶¶60-

61; Van Camp, 3:61-64; EX-1015 ¶¶176-78. These keep the OS up-to-date. EX-1015 ¶178. Given Rao's disclosure of a client with an OS and applications and a POSITA's knowledge of OS auto-updates, it would have been obvious to implement one or more of Rao's applications as an OS auto-update application to communicate packets (e.g., service usage activity) for an OS function, component, or service (e.g., an OS update). *Id.*

A POSITA would have been motivated to do so to enable monitoring of software versions and updating the OS as necessary via network 104. *Id.* ¶179. This would have maintained the usability of client 105, including by addressing security or usability issues, and providing ongoing OS updates. *Id*. Doing so would have been nothing more than a routine, predictable application of a POSITA's knowledge to Rao's client and applications. *Id*. A POSITA would have recognized the benefits, including prioritizing foreground OS updates over background activity, deprioritizing background OS updates, and improving update efficiency. *Id*.

### S. Claim 21

#### 1. " . . . claim 1, wherein the first software component comprises <u>a</u> . . . <u>process</u> . . . ."

Rao discloses or renders obvious claim 21. Rao's applications may "provide one or more real-time data communications, such as VoIP" or "email, collaboration, online meeting, and/or desktop sharing related services or functionality." Rao ¶¶179, 184, 192. To do so, applications 338*a*-338*n* must each comprise a plurality of

"process[es]" that run on client 105. EX-1015 ¶¶180-81. For instance, an application that provides email services must run processes to send/receive emails and associated attachments. *Id*. Similarly, an online meeting application must run processes that allow client 105 to receive, transmit, and play/display audio and video. *Id*.

Rao confirms this: "remote access client 120 may determine any priorities, such as ***process task priority***, assigned to the application." Rao ¶188. Client 105 could not assign "process task priorit[ies]" to applications unless they include underlying processes to prioritize. *See id.*; EX-1015 ¶182. Similarly, Rao's agent 326 may "provide[] to the filter 322 a mapping between applications 338*a*-338*n*, ***such as by*** application name or ***process id***," confirming the applications comprise processes. Rao ¶190; EX-1015 ¶183.

### T. Claim 22

#### 1. "**. . . claim 1, wherein the first software component comprises a plurality of . . . <u>processes</u>.**"

*Supra* claim 21. Rao discloses or renders obvious that its applications comprise a plurality of "processes." EX-1015 ¶¶184-85.

### U. Claim 23

#### 1. " . . . claim 1, wherein the first software component comprises <u>a Java archive (JAR) file</u> . . . , [or] <u>an application that uses a proxy service function</u> . . . ."

Rao's applications "can be any type . . . , such as . . . a Java applet." Rao ¶88. The files associated with Java applets are typically in Java Archive (JAR) files. EX-1015 ¶¶186-87. Rao's applications may also be email applications in communication with, e.g., a "server providing email services such as Microsoft Exchange," which is a proxy service manager that performs proxy service functions. Rao ¶¶90, 179, 192; *supra* [9a], [13a], claims 10-12; EX-1015 ¶188. Rao thus discloses or renders obvious a first software component comprising a JAR file or an application using a proxy service function. EX-1015 ¶¶187-88.

### V. Claim 26

#### 1. " . . . claim 1, wherein the policy is based on a background service class . . . ."

Rao's policies 520 may "define prioritization" for network packets "based on whether an application ***is running in the foreground or the background***." Rao ¶182; *id.* ¶¶38-43, 180, 182, 188-89, 193, Figs. 5A, 5B. Each packet "may be placed and arranged in a priority order respective to all other . . . packets to provide a packet by packet prioritization across all applications 338*a*-338*n* and . . . network packets." *Id.* ¶191. It would have been obvious to determine and apply a policy assigning a specific priority to packets associated with background applications, *supra* [1e]-[1f],

and Rao thus discloses or renders obvious assigning a priority to network communications based on whether they are characterized as background services (class of services associated with application(s) running in the background of client 105), EX-1015 ¶¶195-96; *supra* [1e], [1f].

### W. Claim 45

#### 1. " . . . claim 1, wherein determine . . . background . . . comprises determine whether the first software component is in a user interface foreground."

Rao discloses "remote access client 120 may determine whether the application 338*a*-338*n* associated with the network packet is running in the foreground or the background." Rao ¶188; *id.* ¶¶182, 187-89; *supra* [1d].

To prioritize network packets based on whether the associated application is running in the foreground, client 120 determines whether that application is in the foreground of the user interface (e.g., visible to a user using the application). EX-1015 ¶¶210-13. To the extent it is argued Rao does not expressly disclose this, it would have been obvious to configure Rao to determine whether an application is in the user interface foreground so that applications currently being used are characterized as foreground and not background activity and associated packets are prioritized as Rao describes in accordance with Rao's goal of prioritizing active applications over background ones. *Id.* ¶214; Rao ¶¶3, 133, 140. Determining (e.g., via user inputs) whether a user is interacting with an application (and therefore the

application is in the user interface foreground) was well known and routine. EX-1015 ¶¶214-15; *also infra* claim 58.

### X. Claim 49

#### 1. "**. . . claim 1, wherein determine . . . background . . . comprises determine whether the service usage activity is a foreground activity.**"

*Supra* claim 45; Rao ¶¶187-88, 3, 38-41; EX-1015 ¶¶216-20. Activity associated with an application in a user interface foreground is foreground activity. EX-1015 ¶218.

### Y. Claim 50

#### 1. "**. . . claim 1, wherein determine . . . background . . . comprises determine whether the first software component is a foreground component.**"

*Supra* claim 45; Rao ¶¶187-88, 3, 38-41; EX-1015 ¶¶221-26. An application running in the foreground of a user interface in active use, as Rao teaches, encompasses a foreground component. EX-1015 ¶223.

### Z. Claim 58

#### 1. "**. . . claim 1, wherein determine . . . background . . . comprises determine whether content associated with the service usage activity is in a foreground of a user interface of the wireless end-user device.**"

*Supra* claim 45; Rao ¶¶182, 187-89, 3, 38-41; EX-1015 ¶¶227-31. Rao's foreground applications are "in active use by the user." Rao ¶3. Rao describes "interactive" user sessions, "involv[ing] multimedia elements such as video." *Id.*

¶¶133, 140. These are exemplary "active use[s]" classified as foreground activities. EX-1015 ¶229. "Interactive" applications, such as video, display user-interface-foreground content when the application is used (e.g., making a telephone call or a video call). *Id.* It would have been obvious to rely on whether an application's content is displayed in the foreground of the device user interface to determine whether the service usage activities associated with that content are foreground or background activities. *Id.* ¶230.

### AA. Claim 59

#### 1. "**. . . claim 1, wherein determine whether . . . background . . . comprises determine whether the first software component is active.**"

*Supra* claims 58, 45; Rao ¶¶187-88, 3, 38-41; EX-1015 ¶¶232-35. Rao describes exemplary foreground applications "in ***active use*** by the user." Rao ¶3. Rao's agent determines whether the application packets "comprise[] real-time data" *Id.* ¶44. A foreground application in "active use" and generating network packets comprising real-time data is a software component that is "active" and thus not background activity. EX-1015 ¶¶234.

### BB. Claim 60

#### 1. "**. . . claim 1, wherein apply the policy comprises at least assist in . . . <u>delaying</u> . . . the service usage activity.**"

Rao forms queues so the "network packets of the highest priority queue 540*a*-540*n* are communicated first, and then the next highest priority queue 540*a*-540*n*

second, and so on." Rao ¶194. This discloses or renders obvious delaying low-priority packets in favor of high-priority packets. EX-1015 ¶¶236-37. Indeed, Rao discloses "***holding***, by the client, in the queue a network packet associated with the second application [until] communication of . . . packets associated with the first application." Rao ¶40. The network packet (service usage activity) associated with the second application (e.g., background activity) is thus delayed. EX-1015 ¶238.

### CC. Claim 64

#### 1. [64a] " . . . claim 1, wherein the . . . communications over the wireless network comprise one or more Internet protocol (IP) address requests, and"

Rao discloses communication sessions between first and second devices that occur via a tunneling session with a third computing device (e.g., an SSL VPN gateway). Rao ¶¶5, 11, 136-37. When the first device sends a request to initiate the connection, the third device intercepts the request and sends the "last known public IP address of the second computing device" to the first device. *Id.* ¶137; *id.* ¶¶5, 11.

The request from the first computing device includes an IP address request because in response, the IP address is sent. *Id.*; EX-1015 ¶¶244-45. If not expressly disclosed, this would have been obvious. EX-1015 ¶246.

To the extent Rao's prioritization and tunneling disclosures are separate, it would have been obvious to combine them, as Rao suggests, to establish a secure connection with better quality and reduced latency. *Id.* ¶247; Rao ¶¶135, 218.

Utilizing these techniques in a combined system would have been well within the skill of a POSITA and would have yielded predictable results. EX-1015 ¶247.

#### 2. [64b] "wherein apply the policy comprises at least assist in . . . <u>delaying</u> . . . at least a portion of the service usage activity."

Rao discloses delaying its packets (e.g., service usage activity) and likewise discloses delaying ***at least a portion of*** the service usage activity. *Supra* claim 60; Rao ¶¶189-95; EX-1015 ¶¶248-51.

### DD. Claim 157

#### 1. " . . . claim 1, wherein the user input obtained through the user interface . . . comprises a directive to apply the policy to a second software component . . . on the wireless end-user device."

Rao discloses or renders obvious obtaining user input (directive) to apply a priority to a second application (second software component), because Rao applies the prioritization policy, which is based on user input, to multiple applications. *Supra* [1e]; Rao ¶¶182-83; EX-1015 ¶¶294-96. Rao's user input therefore directs application of prioritization to at least two applications, e.g., two applications running in the background. Rao ¶¶40-42; EX-1015 ¶296. The policy would apply a prioritization order for second-application-associated packets relative to first-application-associated packets. EX-1015 ¶296.

To the extent the claim requires the user input to specify a particular application, Rao discloses and renders this feature obvious because it discloses that

its policies may "be specified by the name of the application 338*a*-338*n*." Rao ¶182; EX-1015 ¶297. It would have been obvious to determine at least an aspect of a policy based on user input directing policy application to a particular application (e.g., a second software component), e.g., prioritizing particular applications at a higher or lower priority based on user preference, to increase Rao's useability and functionality by increasing user control. EX-1015 ¶297.

### EE. Claim 165

#### 1. [165a] " . . . claim 1, wherein the service usage activity is a first service usage activity, . . . the . . . communications . . . are first . . . communications . . . , the background activity is a first background activity, and wherein the user input . . . is a first user input . . . "

*Supra* [1a]-[1g]; EX-1015 ¶298.

#### 2. [165b] "identify a second service usage activity . . . associated with a second software component . . . comprising second . . . communications over the wireless network;"

Rao discloses "intercepting, by the client, the ***one or more network packets*** transparently to the ***one or more applications on the client***." Rao ¶¶41-46, 184-85, Fig. 5B (Step 555). Intercepting network packets associated with multiple applications renders obvious identifying first and second service usage activities associated with respective first and second software components. EX-1015 ¶¶299-300. Rao also discloses "identify[ing]," "service usage activity," a "wireless end-user device," and "prospective or successful communications over the wireless

network" related to a second software component for the same reasons it discloses these elements related to a first software component. *Id.* ¶300; *supra* [1b].

#### 3. [165c] "determine whether the second service usage activity is a second background activity; and . . . apply at least a portion of the policy . . . based on a second user input."

Rao discloses or renders obvious determining whether a service usage activity is background activity and applying a policy based on that determination because Rao teaches intercepting and prioritizing network packets from multiple applications. *Supra* [1e]-[1g]. It therefore would have been obvious to apply the policy to a second software component based on second user input. EX-1015 ¶¶301-03. Rao discloses users may specify a policy based on several different aspects, including particular applications, application/protocol type, packet destination or size, time, or foreground/background status. Rao ¶¶182, 191, 193. It would have been obvious to receive a second user input specifying a policy aspect applicable to a second application, as Rao suggests in examples. EX-1015 ¶303; Rao ¶¶182, 191, 193. Doing so would have allowed a user to apply a priority to packets based on different variables, increasing functionality and user control. EX-1015 ¶304; Rao ¶¶182, 191, 193.

### FF. Claim 169

#### 1. [169a] " . . . claim 1, . . . a first service usage activity, . . . first one or more prospective or successful communications . . . cause the one or more processors to:"

*Supra* [1a]-[1g]; EX-1015 ¶305.

### 2. [169b] "identify a second service usage activity . . . associated with the first software component . . . comprising second . . . communications over the wireless network;"

Rao discloses identifying a service usage activity associated with the first software component. *Supra* [1b]. Rao further discloses or renders obvious the service usage activity being a second service usage activity from the first software component because it "intercept[s] . . . ***one or more network packets***." Rao ¶¶41-46, 184-85; EX-1015 ¶¶306-08. Rao's intercepting more than one packet from the same application discloses or renders obvious identifying first and second service usage activities associated with a first software component. EX-1015 ¶308. A POSITA would have understood that a software component may conduct a first and then a second service usage activity, Rao would intercept the second packet (second service usage activity), in the same way as the first. *See* Rao ¶¶41-46, 102, 105, 184-86; EX-1015 ¶308.

### 3. [169c] "determine whether the second service usage activity is the background activity; and . . . apply at least a portion of the policy."

*Supra* [1d], [1g], [169b]. Rao "determines" to facilitate its disclosed prioritization, which applies to multiple network packets (e.g., first and second service usage activities). Rao ¶¶189-90; *supra* [165b]; EX-1015 ¶¶309-11. Rao thus discloses or renders obvious making a corresponding background determination and

applying the policy to a second service usage activity in the same way as it makes the background determination and applies the policy to the first. EX-1015 ¶311.

### GG. Claim 171

#### 1. "The wireless end-user device embodying the non-transitory computer-readable storage medium recited in claim 1."

Rao discloses that client 105 may be a wireless end-user device (*supra* [1a]; Rao ¶¶116-21) with "sufficient processor power and memory capacity to perform [Rao's] operations" (claim 1's limitations). Rao ¶130; *supra* claim 1; EX-1015 ¶¶312-14.

## VIII. Ground 2: Rao-Fadell Renders Obvious Claims 1, 2, 7, 41-43, 46, 63, 155-156, 160-164, 166-168, and 170

### A. Motivation to Combine

It would have been obvious to combine Rao and Fadell, which disclose complementary methods for controlling network communications. EX-1015 ¶¶317-18; Rao ¶¶85-89, 97-105, 179-95, Figs. 5A-5B; Fadell ¶¶21-22, 47-72, Figs. 1, 3-6.

Like Rao's "remote access client," Fadell's "resource utilization component" monitors resource usage and notifies users when usage reaches a limit to avoid penalties. Fadell ¶¶16, 21-27, 47-72, Figs. 1, 3-6. Fadell's resource utilization component may enable, disable, cancel, delay, or reschedule network processes or communications based on, e.g., importance, type of data transferred, associated application or protocol, and/or resources available. *Id.*; EX-1015 ¶¶319-20.

A POSITA would have looked to Fadell to improve Rao given their similarities and benefits. EX-1015 ¶¶321-22. The combined system would apply a prioritization to network packets from a background activity and notify a user when resource usage approaches a threshold. *Id.* When the threshold is met in Rao-Fadell, background activity network packets would be queued and deprioritized (Rao ¶¶180-95), and the user would be notified and given options to proceed (Fadell ¶¶47-72, Figs. 1, 3-6). EX-1015 ¶¶321-23. In one example, when a threshold (e.g., monthly data limit) is reached, the policy would cause the user to be notified and the system to intercept/queue background activity (e.g., email pulls, auto-update processes, RSS feeds). *Id.*

A POSITA would have been motivated to combine the functionalities of Rao and Fadell (including, e.g., that associated with Rao's remote access client and with Fadell's resource utilization component) to deprioritize "low-priority" background activity, as both Rao and Fadell suggest, Rao ¶¶179, 182, 188-89, 192; Fadell ¶¶60, 64, 66, while providing the user information and options for how to proceed, as Fadell suggests, Fadell ¶¶47-72, Figs. 1, 3-6; EX-1015 ¶323. This would have minimized data-overage costs by rescheduling/delaying background activity near resource limits while providing the user with options for proceeding, e.g., by reducing resource usage, purchasing additional data, or switching networks. EX-1015 ¶¶323-26; Fadell ¶¶2-7, 16-18, 56-57, 63-65. Rao and Fadell contemplate

cellular use, and Rao's prioritization would have benefited from Fadell's usage limits and notifications in this "pay to use" context. EX-1015 ¶¶323-26; Rao ¶¶198, 130; Fadell ¶¶2-7, 16-18, 23, 42-46.

Combining Rao and Fadell would have been nothing more than the simple combination of known elements to obtain predictable results. EX-1015 ¶¶327-28. For example, the combination of Fadell's resource usage thresholds and notifications with Rao's network packet prioritization techniques would have yielded the predictable result of a system that applies a prioritization of network packets associated with background activity and notifies the user when resource usage limits reach a threshold. *Id.* This also would have been nothing more than the use of the known techniques of monitoring resource usage limits and notifying the user to improve Rao in the same way and apply prioritization to background activity to avoid data overages. *Id.* A POSITA would have had a reasonable expectation of success in combining Rao with Fadell because both disclose monitoring network activity from handheld devices and mobile telephones and policies relating to associated network traffic. *Id.*

### B. Claim 1

#### 1. [1a] "A non-transitory computer-readable storage medium storing machine-executable instructions that, when executed by one or more processors of a wireless end-user device, cause the one or more processors to:"

Rao teaches [1a]. *Supra* §VII.A.1.

Like Rao, *supra* §VII.A, Fadell's wireless end-user device may include "a cellular telephone," Fadell ¶¶29, 37. Fadell also discloses a "resource utilization component." *Id.* ¶31; EX-1015 ¶¶329-32.

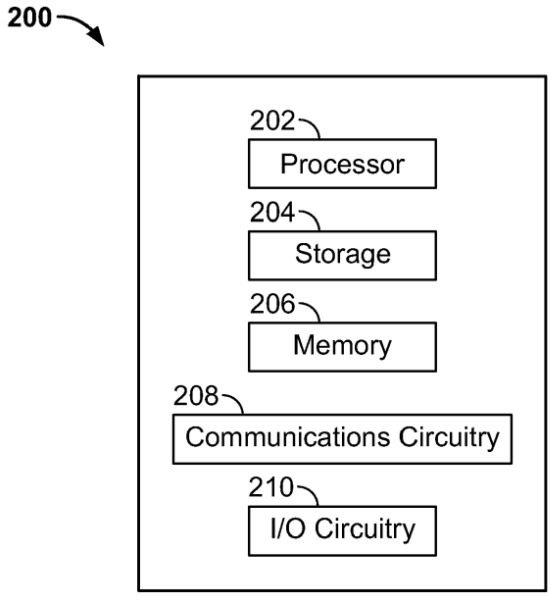


**FIG. 2**

Fadell, Fig. 2.

It would have been obvious to implement the Rao-Fadell device as a cellular phone or handheld computer that communicates over wireless (e.g., cellular) networks. *Id.* ¶¶29, 37. The Rao-Fadell device includes memory, storage, and a processor to execute stored instructions associated with the disclosed software/applications (e.g., Rao's remote access client 120 and/or Fadell's resource utilization component 110). EX-1015 ¶¶329-32. It would have been obvious to include functionalities associated with both Rao's remote access client 120 and

Fadell's resource utilization component 110 in the combined instructions. *Id.* Rao explains that its policies are non-exclusive, Rao ¶182, and a POSITA would have found it obvious to combine Rao's prioritization policies and Fadell's resource usage notification policies, EX-1015 ¶¶329-32; *supra* §VIII.A.

#### 2. [1b] "identify a service usage activity of the wireless end-user device, the service usage activity being associated with a first software component of a plurality of software components on the wireless end-user device,"

Rao teaches [1b]. *Supra* §VII.A.2.

Like Rao, *supra* §VII.A, Fadell discloses data transfers to/from device 120 via wireless network 102 ("service usage activity of the wireless end-user device"), Fadell ¶¶17-22, 26-32, 46-47, 62, 71-72.

Like Rao, Fadell identifies service usage activity. To monitor and limit resource usage, Fadell's resource utilization component "identif[ies]" data requests and/or transfers (service usage activity). EX-1015 ¶¶333-37. This includes associating data requests and/or transfers with data types, applications, and/or protocols. Fadell ¶¶18, 56, 59-61, 64.

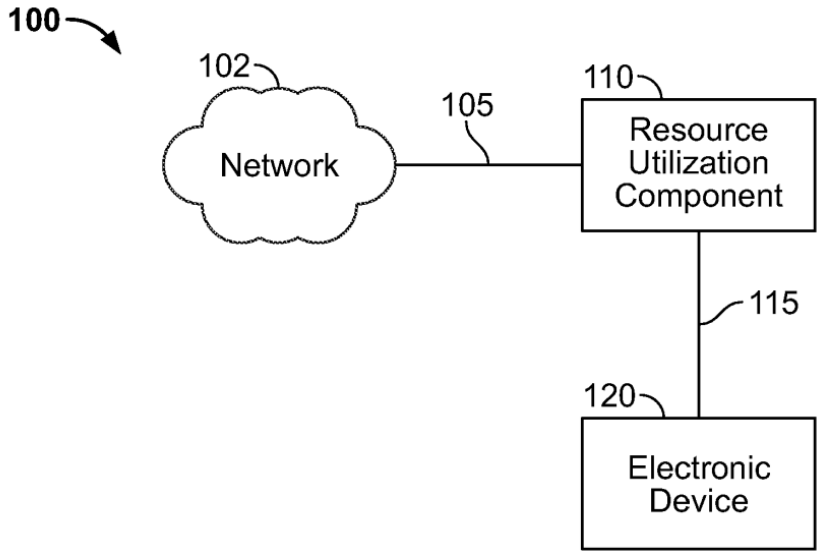


**FIG. 1**

*Id.*, Fig. 1.

Given these teachings, a POSITA would have been motivated to implement functionalities from both Rao's remote access client 120 and Fadell's resource utilization component 110 in the combined instructions to identify service usage activity in order to implement the Rao-Fadell policy. EX-1015 ¶¶333-37; *supra* §VIII.A.

### 3. [1c] "the service usage activity comprising one or more prospective or successful communications over a wireless network;"

Rao teaches [1c]. *Supra* §VII.A.3.

Like Rao, *supra* §VII.A, Fadell discloses that "[e]lectronic device 120 may connect to network 102 using . . . any suitable wired or wireless communications path," Fadell ¶28; EX-1015 ¶¶338-41. Fadell discloses that communications

between electronic devices 120 and network 102 may be routed through its resource utilization component, the functionality of which would have been incorporated with that of Rao's remote access client in Rao-Fadell. Fadell ¶¶27-28; *supra* §VIII.A.

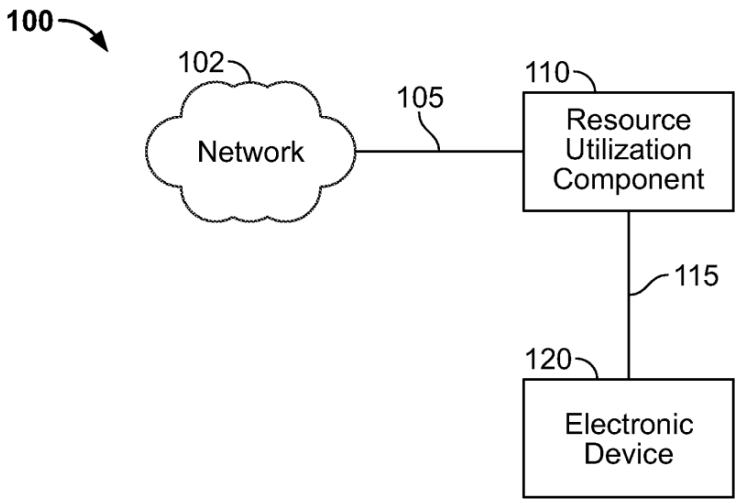


**FIG. 1**

Fadell, Fig. 1.

Fadell's resource utilization component monitoring device data requests and/or transfers to or from network 102 (service usage activity) discloses identifying service usage activity comprising prospective or successful communications over the wireless network. *Id.* ¶¶24-28, 46-47; EX-1015 ¶¶338-41.

#### 4. [1d] "determine whether the service usage activity comprises a background activity;"

Rao teaches [1d]. *Supra* §VII.A.4. Rao's teachings would have been implemented in Rao-Fadell to enable a policy that applies prioritization (e.g., a lower priority) as suggested by Rao and Fadell. *Supra* §§VII.A, VIII.A; EX-1015 ¶342.

### 5. [1e] "determine at least an aspect of a policy based on a user input obtained through a user interface of the wireless end-user device or based on information from a network element,"

Rao teaches [1e]. *Supra* §VII.A.5. Rao's teachings, including those associated with Rao's remote access client, would be incorporated into Rao-Fadell. *Supra* §VII.A; EX-1015 ¶343. To the extent it is argued Rao alone does not disclose this limitation, it would have been obvious to combine Rao and Fadell to provide a policy that specifies a prioritization for network packets and notifies a user when a resource usage threshold is reached. EX-1015 ¶¶344-50; *supra* §VIII.A.

Fadell discloses that a user may receive "reminders or alarms" that the user has reached a resource limit or threshold. Fadell ¶¶51-53, 48-50, 54-70. Fadell thus discloses a "policy" (e.g., providing notifications at a threshold) and an "aspect of a policy" (e.g., threshold value). EX-1015 ¶¶344-50.

Fadell determines the usage threshold and whether it has been reached based on (1) information regarding resource use from "a ***router or network component*** downstream" (network element) and/or (2) user-defined ranges (user input) provided via "component[s] for allowing a user to provide inputs" (user interface). Fadell ¶¶36-37, 50-51; EX-1015 ¶¶344-50. At least an aspect of the policy is based on the range/threshold (user input) or the resource use information (information from a network element). EX-1015 ¶¶344-50.

The Fadell policy notifies the user when a resource usage threshold is reached, and these notifications are thus based on the limit/threshold information received from the network element or user:

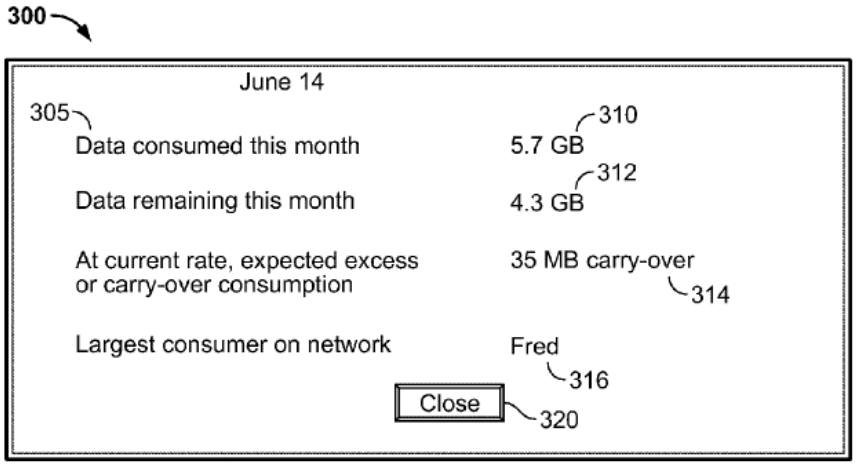


FIG. 3

Fadell, Fig. 3.

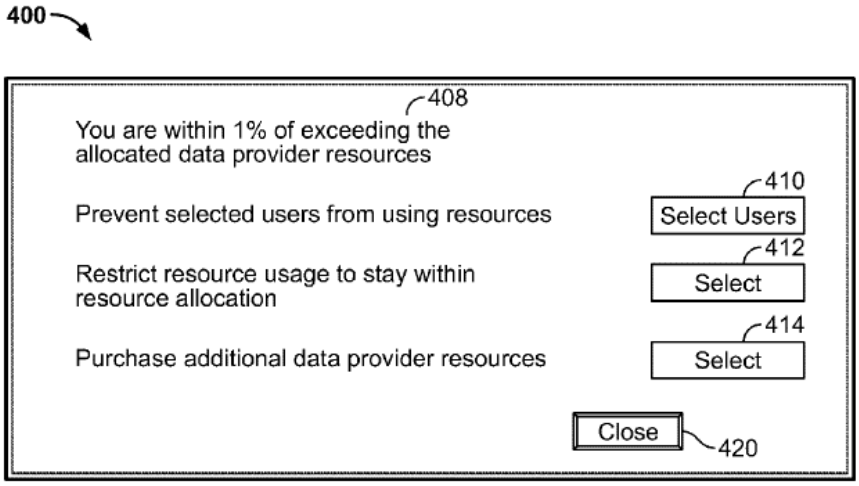


FIG. 4

*Id.*, Fig. 4.

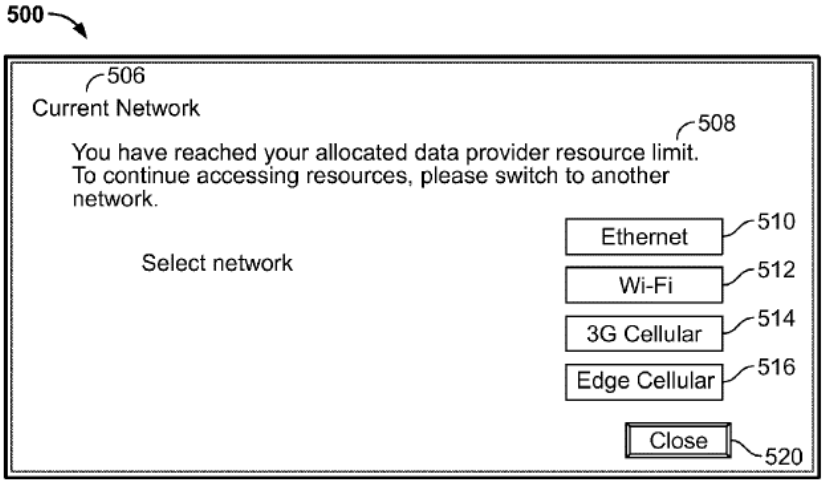


FIG. 5

*Id.*, Fig. 5, ¶¶50-70; EX-1015 ¶347.

For the reasons discussed, *supra* §VIII.A, a POSITA would have combined Rao and Fadell to provide a system with a policy that controls network activity and alerts a user when resource usage limits approach a threshold, implementing these features in Rao-Fadell, which discloses [1e]. A POSITA also would have combined Rao with Fadell for the reasons explained in Fadell: to "assist the consumer in avoiding excess fees or penalties[] the consumer may receive (e.g., from the data provider or from the resource utilization component)." Fadell ¶51; EX-1015 ¶¶348-49. This would have allowed a user to control resource usage, avoid overage charges, and prioritize foreground activity when resource usage limits are reached. EX-1015 ¶¶348-49.

### 6. [1f] "the policy to be applied if the service usage activity is the background activity, the policy at least for controlling the service usage activity; and"

Rao teaches [1f]. *Supra* §VII.A.6. Rao's teachings would be incorporated into Rao-Fadell. *Supra* §VII.A; EX-1015 ¶¶351-55.

To the extent it is argued Rao does not expressly disclose applying a policy "if" the service usage activity is the background activity, as discussed in Ground 1, it would have been obvious to modify Rao to apply a policy in this manner. *Supra* §VII.A.6; EX-1015 ¶¶351-55.

In the combined Rao-Fadell system, it would have been obvious to implement Rao's policy of assigning a priority to network packets based on the packets being background activity when a resource usage limit or threshold is reached and a user is notified, as taught by Fadell. Fadell ¶¶49-72, Figs. 3-6; EX-1015 ¶¶354-55. As discussed, *supra* §VIII.A, in Rao-Fadell, a POSITA would have been motivated to apply a lower prioritization to background activity and notify a user when a resource usage limit or threshold is reached to prevent inadvertent overages, reduce consumer costs, and provide Fadell's notifications that include options for proceeding. EX-1015 ¶¶354-55.

### 7. [1g] "if it is determined that the service usage activity is the background activity, apply the policy."

Rao teaches [1g]. *Supra* §VII.A.7.

In Rao-Fadell, it would have been obvious to apply Rao's prioritization to network packets determined to be background activity at least when a threshold is reached. EX-1015 ¶¶356-63; *supra* §VII.A.7 (explaining Rao's prioritization).

In doing so, it would have been obvious to apply prioritization (e.g., lower priority) to background activity packets and notify a user of data resources (e.g., via Fadell's screens 300-500) to enable the user to control how to proceed. Fadell ¶¶50-71, Figs. 3-6; EX-1015 ¶¶360-63. For example, a user may elect, as Fadell teaches, to "reschedule or cancel processes requesting data of lesser importance" via screen 400 and cause intercepted and/or future intercepted background activity packets to remain in a queue, as taught by Rao. Fadell ¶¶57-60; Rao ¶¶180-95; EX-1015 ¶¶360-63. A POSITA would have applied and/or modified Rao in this manner to prevent inadvertent overages and reduce costs for the consumer, and been motivated to do so for the reasons discussed above. *Supra* [1f] (Ground 2), §VIII.A; EX-1015 ¶¶360-63.

### C. Claim 2

#### 1. [2a] " . . . claim 1, . . . the first software component comprises at least a portion of an application component . . . "

Rao-Fadell teaches [2a] by disclosing applications. Rao ¶¶179, 87-91, 180-95; Fadell ¶¶56, 59; EX-1015 ¶¶364-65.

### 2. [2b] "wherein the . . . communications . . . comprise an update to the first software component."

Rao-Fadell teaches [2b]. *Supra* [1c] (Ground 2). Fadell further discloses the communications include "auto-update processes." Fadell ¶¶60-61. In Rao-Fadell, Fadell's auto-update processes would update, for example, Rao's applications 338*a*-338*n*, which would involve transferring network packets over network 104. EX-1015 ¶¶366-67. This teaches [2b]. A POSITA would have been motivated and found it obvious to update applications 338*a*-338*n* using Fadell's auto-update processes, as was known in the art. *Id*. These updates would ensure the applications' continued operability, usability, and security. *Id*.

A POSITA would have been motivated to determine whether Fadell's auto-update processes are background activities and apply Rao's prioritization policy to associated network packets when a resource usage threshold is reached. *Supra* [1e] (Ground 2); EX-1015 ¶368. Fadell identifies auto-updates as "less[] importan[t]" and contemplates downgrading their priority by "reschedul[ing]," "cancel[ling]," or "delay[ing]" them. EX-1015 ¶368; Fadell ¶¶60-61.

## D. Claim 7

### 1. " . . . claim 1, wherein identify . . . comprises identify an intention to launch or start the first software component."

Rao-Fadell teaches claim 7. Fadell discloses when a user "load[s] a web page that includes video or audio, [the application] may not automatically start playing

back the video or audio but await an instruction from the user (e.g., a selection of the video or audio)." Fadell ¶59.

A POSITA would have understood that, to offer the user the choice of playing back video or audio, Fadell must identify an intention to launch or start a software component that provides the video or audio (e.g., a video or audio plug-in for the web browser). *Id.*; EX-1015 ¶¶369-71. Fadell thus discloses identifying a service usage activity (e.g., associated with streaming the audio or video) by identifying an intention to launch or start a first software component (e.g., the audio or video plug-in). EX-1015 ¶371. Fadell's waiting for the user to indicate an "interest in the media (instead of indeterminately providing audio)" would conserve resources and avoid unnecessary data expenditure. *Id.*

A POSITA also would have recognized that an application may prompt other components to engage in background activity (e.g., automatic updates, virus scan updates, RSS feed detectors). *Id.* ¶372; Fadell ¶¶56, 60. A POSITA would have been motivated to apply Fadell's teachings to identify an intention to launch these components and allow the user to decide whether to start these processes. EX-1015 ¶372.

Applying these teachings in Rao-Fadell would have allowed user control over resource usage and the ability to reduce resource consumption. *Id.* ¶373. A POSITA would have been motivated to do so to prevent software components from

consuming data and bandwidth, potentially without the user's knowledge (e.g., in the background and automatically). *Id*. Combining Fadell's teachings in this way with Rao would have been simply combining known elements in the prior art according to understood principles to yield predictable results. *Id*.

### E. Claim 41

#### 1. [41a] " . . . claim 1, . . . a first wireless network, and . . . a first service usage activity, and"

*Supra* [1a]-[1g] (Ground 2); EX-1015 ¶415.

#### 2. [41b] "wherein the policy assists . . . control[ling] the first service usage activity when the . . . device is connected to the first wireless network and"

Rao-Fadell teaches [41b]. *Supra* [1c]-[1g] (Ground 2). The policy in Rao-Fadell assists the processor to control the first service usage activity by intercepting, queuing, and assigning a priority to network packets associated with background activity. *Supra* [1c]-[1g] (Ground 2); EX-1015 ¶416. This corresponds with claim 42, which defines control as "restrict[ing]" a service usage activity. EX-1015 ¶416.

#### 3. [41c] "refrain from controlling a second service usage activity when . . . connected to a second wireless network, the second service usage activity being associated with the first software component."

Rao-Fadell renders [41c] obvious. For example, Fadell's screen 500 prompts a user to "switch networks" when a data resource limit "for the current network . . . has been reached." Fadell ¶63, Fig. 5. This includes choosing a ***Wi-Fi network***. *Id.* Communications circuitry may then "switch to the selected network."

*Id.* Fadell therefore teaches switching from one wireless (e.g., cellular) network, which may be data-limited and trigger expenses after a limit, to a second that is not so limited (e.g., Wi-Fi). EX-1015 ¶¶417-18.

A POSITA would have applied these teachings in Rao-Fadell to cease intercepting, queuing, and assigning a priority to network packets associated with background activity (e.g., second service usage activity associated with the first software component) when a user switches from cellular to Wi-Fi. *Id.* ¶419. The system would control a first service usage activity over a first wireless network but "refrain" from doing so for service usage activity over a second wireless network. *Id.* The resulting system would benefit by preventing overages and charges on resource-limited networks. *Id.* ¶420; Fadell ¶¶23, 43-44.

A POSITA would have understood that typical cellular data restrictions may not be present or may differ on a Wi-Fi network. EX-1015 ¶420; Fadell ¶19. Thus, a POSITA would have found it obvious to apply the Rao-Fadell policy over a cellular network (e.g., first wireless network) but refrain from doing so over a Wi-Fi network. EX-1015 ¶420. Furthermore, background activity, like software and email updates, would proceed over Wi-Fi, keeping software up-to-date with less restrictions while not competing for limited resources. *Id*.

A POSITA would have applied the policy in this way based on Fadell's teachings. *Id.* ¶421. This would have been combining prior art elements with

predictable results, providing network-centric and selective control of background-activity communications based on the network. *Id*. This would have assisted users avoiding data overages over cellular networks, while allowing important updates and other background activity while on Wi-Fi networks without prioritization-based delay. *Id*.

### F. Claim 42

#### 1. "**. . . claim 41, wherein control . . . comprises . . . <u>restrict</u> . . . the first service usage activity.**"

Rao-Fadell's intercepting, queueing, and assigning a priority to network packets associated with background activity restricts network packets (e.g., first service usage activity) until higher-priority packets have been processed. EX-1015 ¶¶422-23; *supra* [1c]-[1g] (Ground 2).

### G. Claim 43

#### 1. "**. . . claim 41, wherein the second wireless network is <u>a wireless fidelity (WiFi) network</u> . . . .**"

*Supra* claim 41, [1b]-[1c] (Ground 2); EX-1001 (Certificate of Correction); EX-1015 ¶424.

## H. Claim 46

### 1. " . . . claim 1, wherein determine . . . background . . . comprises determine whether the service usage activity is a software update."

Rao-Fadell discloses or renders obvious claim 46. Fadell discloses "reschedul[ing] or cancel[ing] processes requesting data of lesser importance." Fadell ¶60. This includes "cancel[ing] or delay[ing] auto-update processes." *Id.* ¶¶60-61. These updates disclose a "software update." *Id.*; EX-1015 ¶¶425-26.

Rao's restricting background activity corresponds to Fadell's restricting tasks of "lesser importance." EX-1015 ¶427; Rao ¶¶40-41, 182, 188-89; Fadell ¶¶60-61. A POSITA would have applied these teachings to identify background activity that includes software updates in Rao-Fadell and been motivated to do so based on Fadell's teaching and suggestion that software updates are exemplary background activity. EX-1015 ¶427. A POSITA also would have had general knowledge that software updates are typical background activity. *Id.*

A POSITA also would have been motivated to identify background software updates for the reason Fadell and Rao disclose: these are "less[] importan[t]" tasks compared to processes in "active use." Fadell ¶¶60-61; Rao ¶3; EX-1015 ¶428. This would have benefited users because these updates can start in the background, sometimes without notice, and compete with active applications for resources/bandwidth. EX-1015 ¶428. A user would have benefitted from the

additional control over software updates because a user could prioritize active applications over these updates. *Id*. This would have involved nothing more than combining known elements of the prior art with an expectation of success. *Id*.

### I. Claim 63

#### 2. "**. . . claim 1, wherein apply the policy comprises at least assist in preventing an update associated with the first software component.**"

Rao-Fadell discloses a software update may be a background activity. *Supra* claim 46. In Rao-Fadell, a background update activity (e.g., "an update associated with the first software component") packet would be intercepted, placed in a queue, and assigned a priority. *Supra* claim 46, [1a]-[1g] (Ground 2). Placing these network packets in a lower-priority queue discloses, or renders obvious, assisting in preventing an update associated with the first software component because the packets associated with that update are delayed until they are ready to be communicated based on their priority (a temporary prevention). EX-1015 ¶¶430-31. A higher-priority packet would consume the network resource and prevent the lower-priority packet from accessing the network at that time. *Id.* ¶431; Oestvall ¶15.

## J. Claim 155

### 1. "... claim 1, ... a first user input, ... a first policy, and wherein the first user input or a second user input comprises a directive to apply a second policy to a second software component ...."

Rao-Fadell discloses or renders obvious claim 155, including a first user input and a first policy. *Supra* [1e]-[1g] (Ground 2); EX-1015 ¶¶710-14.

Fadell discloses a second user input including a directive to apply a second policy to a second software component. Fadell discloses that the user "may change the properties of the data being downloaded, such as by changing the display resolution of a media file to be displayed or by switching from a more resource intensive Codec to a less resource intensive Codec for playing back the media." Fadell ¶¶53, 59. A POSITA would have understood that because the user is "changing" aspects of the system, the user is providing input, and would have further understood that the input comprises a directive because the user is causing the application (e.g., a second software component) to operate differently. EX-1015 ¶¶715-16. This different operation constitutes a second policy, e.g., using a changed display resolution to download a media file when the device nears a resource threshold. Fadell ¶¶53, 59; EX-1015 ¶716. The decision whether to implement logical criteria as part of a first or second policy would have been a simple design choice and an approach for which a POSITA would have had a reasonable expectation of success. EX-1015 ¶716.

In Rao-Fadell, a POSITA would have been motivated and found it obvious to implement Fadell's changing the properties of data being downloaded. *Id.* ¶717. Allowing the user to set additional policies to control resource use would have beneficially given users greater control over data resources. *Id*. For example, the user would have the option to not only deprioritize lower-priority network packets (e.g., from background activity), but also change the display resolution of a media file downloaded in the foreground, allowing the user to conserve additional resources, as Fadell suggests. *Supra* [1g] (Ground 2); Fadell ¶¶53, 59; EX-1015 ¶717. A POSITA would have been able to implement these concepts with likely success. EX-1015 ¶717.

### K. Claim 156

#### 1. "**. . . claim 1, . . . a first user input, . . . the first user input or a second user input compris[ing] a directive to refrain from applying the policy to a second software component . . . .**"

Rao-Fadell discloses or renders obvious claim 156, including a first user input and first policy. *Supra* [1e]-[1g] (Ground 2); EX-1015 ¶¶718-20.

Fadell further discloses "an option for the consumer to exceed the allocated resources," Fadell ¶53, including "***allowing*** particular users or devices to access data provider resources," *id.* ¶¶54-62, Fig. 4. This also includes "option 414 for ***purchasing*** additional data provider resources." *Id.* ¶57. Screen 400 may allow a user to "***allow or permit*** the download of web pages or other non-media intensive

transfers." *Id.* ¶59. Fadell discloses exercising these options on an application-by-application basis. *Id.*

Fadell's options disclose or render obvious a second user input that comprises a directive to refrain from applying the policy to a second software component. EX-1015 ¶¶721-23. By allowing an application to continue using data, the user is providing a second user input (by choosing that option) that directs the system to override the policy as it relates to that application (e.g., the second software component). *Id.* ¶723.

A POSITA would have implemented Fadell's options in Rao-Fadell such that, on receiving notification that a threshold approaches, the user could override the policy for particular applications. *Id.* ¶724; Fadell ¶59. A POSITA would have been motivated to implement these options in Rao-Fadell to provide users greater control of resources and options for implementing the policy, which would have required nothing more than routine skill. EX-1015 ¶724.

### L. Claim 160

#### 1. [160a] " . . . claim 1, . . . a first service usage activity, . . . a first wireless network, and . . . cause the one or more processors to:"

*Supra* [1a]-[1g] (Ground 2); EX-1015 ¶733.

**2. [160b]/[160c] "identify a second service usage activity . . . associated with the <u>first software component</u> . . . over a second wireless network; and refrain from applying the policy to the second service usage activity"**

Rao-Fadell discloses and/or renders obvious refraining from applying the policy to a second service usage activity of the first software component (e.g., refrain from controlling a second service usage activity) when connected to a second wireless network, as discussed in claim 41. *Supra* [41b]-[41c]; EX-1015 ¶¶734-43.

**M. Claim 161**

**1. [161a] " . . . claim 1, . . . a first service usage activity, . . . a first background activity, . . . a first wireless network, and . . . a first policy, and . . . cause the one or more processors to:"**

*Supra* [1a]-[1g] (Ground 2); EX-1015 ¶744.

**2. [161b] "identify a second service usage activity . . . associated with <u>the first software component</u> . . . over a second wireless network; and"**

*Supra* [160b]; EX-1015 ¶745.

**3. [161c] "determine whether the second service usage activity is a second background activity;"**

*Supra* [169c], [1d] (Ground 2); EX-1015 ¶¶746-48.

**4. [161d] "if . . . the second service usage activity is the second background activity, apply a second policy . . . ."**

Rao-Fadell discloses or renders obvious [161d]. Fadell discloses "the consumer may prevent the download of media data, but allow or permit the

download of web pages or other non-media intensive transfers." Fadell ¶59. This is a second policy. EX-1015 ¶¶749-51.

A POSITA would have included this second policy so that background activity (e.g., first background activity) would be restricted by application of the first policy, while non-media intensive transfers (e.g., a second background activity) would be allowed to proceed. *Id.* ¶752. This would have given users greater control over resource use and provided users options to determine how the policy is implemented and how to proceed, while better preventing overages. Fadell ¶¶49-52; EX-1015 ¶¶752-53.

### N. Claim 162

#### 1. " . . . claim 161, wherein the first policy restricts or prevents the first background activity, and wherein the second policy allows the second background activity."

*Supra* [161d], [41b]-[41c]; EX-1015 ¶¶754-55.

### O. Claim 163

#### 1. [163a] " . . . claim 1, . . . a first service usage activity, . . . a first wireless network, and . . . a first policy . . . cause the one or more processors to:"

*Supra* [1a]-[1g] (Ground 2); EX-1015 ¶756.

#### 2. [163b] "identify a second service usage activity . . . associated with <u>the first software component</u> . . . over a second wireless network; and"

*Supra* [160b]; EX-1015 ¶757.

**3. [163c] "apply a second policy to the second service usage activity."**

*Supra* [161d]; EX-1015 ¶¶758-59.

**P. Claim 164**

**1. " . . . claim 163, wherein the second policy comprises a <u>control policy</u> . . . associated with the <u>first software component</u> . . . ."**

*Supra* [161d]; EX-1015 ¶¶760-63.

**Q. Claim 166**

**1. [166a] " . . . claim 1, . . . a first service usage activity, . . . first one or more prospective or successful communications . . . , and . . . cause the one or more processors to:"**

*Supra* [1a]-[1g] (Ground 2); EX-1015 ¶764.

**2. [166b] "identify a second service usage activity . . . associated with a second software component . . . comprising second . . . communications over the wireless network;"**

Rao-Fadell teaches that the identified service usage activity may be a "second" service usage activity associated with a second software component. Rao ¶¶4, 41-46, 184-85, Fig. 5B (Step 555); Fadell ¶¶4, 22, 26-29, 32, 46-47, 59, 62, 64. The "second" service usage activity would comprise "second" communications over the wireless network, and the identification of such activity would occur in the same way. *Supra* [1b] (Ground 2); EX-1015 ¶¶765-68.

**3. [166c] "determine whether the second service usage activity is the background activity; and"**

*Supra* [161c], [1d] (Ground 2); EX-1015 ¶¶769-71.

#### 4. [166d] "if it is determined that the second service usage activity is the background activity, refrain from applying at least a portion of the policy."

*Supra* [41c], [156]; EX-1015 ¶¶772-73. Fadell also discloses that "the consumer may prevent the download of media data, but allow or permit the download of web pages or other non-media intensive transfers." Fadell ¶59. Permitting the download of web pages or other non-media-intensive transfers in the background may be part of the system prioritization policy. EX-1015 ¶774. A POSITA would have included this aspect of the policy (e.g., permitting the download of web pages or other non-media-intensive transfers in the background), as suggested by Fadell, to permit certain background activities while restricting others (e.g., from a first software component). *Id.* ¶775. This would have given users greater control to limit resource use by applications and provided options for the user regarding how the policy is implemented, how to proceed, and how to prevent overages. *Id*.

### R. Claim 167

#### 1. [167a] " . . . claim 1, . . . a first background activity, . . . a first service usage activity, . . . first . . . communications over the wireless network, and . . . a first policy, and . . . cause the one or more processors to:"

*Supra* [1a]-[1g] (Ground 2); EX-1015 ¶776.

**2. [167b] "identify a second service usage activity . . . associated with a second software component . . . comprising second . . . communications over the wireless network;"**

*Supra* [166b]; EX-1015 ¶777.

**3. [167c] "determine whether the second service usage activity is a second background activity;"**

*Supra* [166c]; EX-1015 ¶778.

**4. [167d] "obtain a second policy . . . to be applied when the second service usage activity is the second background activity . . . for controlling the second service usage activity; and**

*Supra* [161d]; EX-1015 ¶¶779-84.

**5. [167e] "if . . . the second service usage activity is the second background activity, apply the second policy."**

*Supra* [161d], [167d]; EX-1015 ¶785.

## S. Claim 168

**1. " . . . claim 167, wherein the first policy . . . [is] based on . . . <u>a cost associated with the wireless network</u>."**

The first policy in Rao-Fadell queues and prioritizes network packets associated with background activity and notifies the user when a resource usage limit is reached. *Supra* claim 1 (Ground 2). The limit is based on a data plan. Fadell ¶¶16, 18, 43-44. Fadell's notifications "assist a subscriber in managing their usage under such pricing mechanisms." *Id.* ¶¶16-17, 23, 42-44, 51-53, 57, 63-65, 72.

Given Fadell's user notifications based on data plan limits or ranges to "avoid[] excess fees or penalties" (*id.* ¶51), a POSITA would have understood that at least the first policy in Rao-Fadell is based on a "cost associated with the wireless network." EX-1015 ¶¶786-88. A POSITA would have applied the policy in Rao-Fadell to reduce unwanted costs, as Fadell discloses. *Id.* ¶788; Fadell ¶51. Doing so would have been desirable, and the result, predictable. EX-1015 ¶788.

### T. Claim 170

#### 1. "**. . . claim 1, . . . cause the one or more processors to . . . <u>account for the service usage activity</u>, [or] <u>report information about the service usage activity</u> . . . .**"

Fadell discloses that "[s]creen 300 may include notifications 305 with data resource usage information," including "notification 310 of the data consumed for the current period (e.g., current month) and notification 312 of the data remaining for the current period," as well as "an estimation of expected resource usage." Fadell ¶50. Screen 300 may also provide "any other information related to the consumption of data provider resources." *Id.*

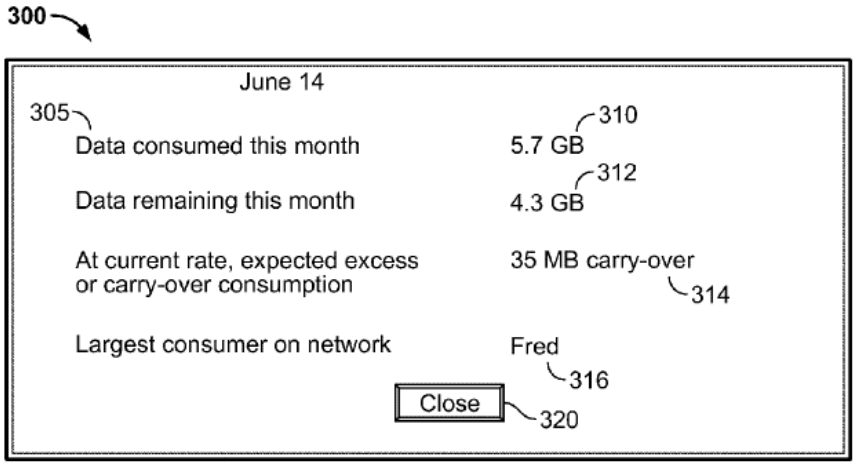


FIG. 3

*Id.*, Fig. 3.

Screen 300 discloses or renders obvious a "report" of information related to the consumption of data provider resources that is "information about the service usage activity" and/or an "account for the service usage activity." *Id.* ¶31; EX-1015 ¶¶789-93. A POSITA would have been motivated to apply these teachings to Rao-Fadell so users could control their resource usage and stay within/below resource usage limits. EX-1015 ¶794. Reporting information about the service usage activity and accounting for it gives users the ability to reduce their resource usage or purchase additional resources. *Id*.

## IX. Ground 3: Rao-Freund Renders Obvious Claims 44, 47-48, and 51-57

### A. Motivation to Combine

Rao and Freund disclose complementary methods of classifying and controlling network communications. EX-1015 ¶¶800-06. Like Rao, Freund

monitors network communications and distinguishes between foreground and background activity. Freund, 14:51-21:50, 8:63-9:3, 10:16-43. Freund maintains a list of actively used processes to "determine if [a] process . . . should have access to the Internet." *Id.*, 4:5-5:5. This enables the system to "monitor TCP/IP activities on a per process or per application basis." *Id.* Freund, like Rao, discloses a system with a "client-side filter." *Id.*, 3:36-4:4; Rao ¶180.

A POSITA would have combined Freund's and Rao's teachings given their similarities. EX-1015 ¶¶800-06. A POSITA would have been motivated to make this combination, for example, in environments where an employer may measure productivity and monitor user devices (e.g., on an employer network or employer user device), as Freund suggests. Freund, 8:63-9:3, 10:16-43. In these environments, it is necessary to accurately characterize active and background activities. *Id.* In Rao-Freund, actively used applications would be tracked, as Freund discloses, and applications not in use would be classified as background activity. EX-1015 ¶¶804, 807-09. This would have enabled accurate measurement of application/Internet use and ensured only those applications not in active use are prioritized according to Rao's policies. *Id.* ¶¶807-09. This would have involved nothing more than combining known elements in the prior art according to understood principles to yield predictable results. *Id.* ¶809.

### B. Claim 44

#### 1. "... claim 1, wherein determine ... background ... comprises determine whether a user is interacting with or has interacted with the first software component."

Freund discloses claim 44 by disclosing examining an "application itself ... for determining whether it is 'active' by determining whether the application receives 'focus' and/or receives user input (e.g., mouse clicks or key strokes)." Freund, 10:16-43, 30:11-49. A POSITA would have combined Freund's application examination with Rao to accurately determine whether network packets correspond to background applications (and not active applications), as Freund discloses. *Id.*, 10:16-43; EX-1015 ¶¶818-22. This would have enabled accurate identification and prioritization of background packets, ensuring user access is not "mistakenly block[ed] ... based on excessive use, when in fact a background application is instead responsible for the activity." Freund, 8:63-9:3. Using Freund's "focus" and "user inputs" to determine activity would have improved Rao by ensuring no false positives (e.g., active applications) are characterized as background activity and deprioritized. EX-1015 ¶¶822-24.

### C. Claim 47

#### 1. "... claim 1, wherein determine ... background ... comprises determine whether ... <u>the service usage activity is or has been classified as a background service</u>."

Freund discloses a client monitor that classifies processes/applications as "active" using a list. Freund, Abstract, 4:5-63, 8:63-9:3, 10:16-43, 13:23-55,

30:13-49. Each process on the list "can be checked for various characteristics" to determine whether the process "should have access to the Internet and what kind of access." *Id.* Freund's monitoring activity and maintaining a list of active applications discloses determining "whether" a service usage activity is or has been classified as a background service (e.g., whether applications are or are not background activity). In the case of service usage activity associated with applications in active use, the service usage activity is not classified as a background service in Freund. EX-1015 ¶¶825-28. This also corresponds with claims 56 and 57, which recite "determin[ing] ***whether*** the service usage activity comprises a background activity" comprises "determin[ing] whether the first software component ***is a foreground component***" or "determin[ing] whether the first software component ***is in a foreground*** of user interaction." EX-1001, cl. 56-57; EX-1015 ¶¶828-30.

A POSITA alternatively would have understood Freund's list of active applications renders obvious maintaining a list of other applications that are ***not*** in active use, and therefore renders obvious a background activity/service "classif[ication]." EX-1015 ¶831. A POSITA would have been motivated to maintain a background activity/service classification in Rao-Freund based on Freund's teaching and suggestion to accurately distinguish between active/background activity. Freund, 10:16-43. For example, Freund's exemplary background activity includes an email client "intermittently poll[ing] an Internet-based mail server" (e.g.,

a communication associated with an email download). *Id.*; EX-1015 ¶832. A POSITA would have understood that Freund suggests classifying background activity based on, for example, a type of the application. EX-1015 ¶832. The resulting combination with Rao would have enabled "each client process [to] be checked for various characteristics, including checking executable names," as Freund teaches, to determine whether a process is a background activity/service. Freund, 13:34-43. Rao also suggests such a classification by disclosing that it distinguishes between foreground and background applications. Rao ¶¶182-88.

A POSITA would have been motivated to maintain a background activity/service classification in Rao-Freund for accounting purposes, including enabling review of the active and background list(s) to avoid false positives (e.g., a process/application being listed inaccurately on the active-use list and vice versa). EX-1015 ¶¶833-34. This would have ensured only background network packets are subject to Rao's prioritization policies. *Id.*

### D. Claim 48

#### 1. " . . . claim 1, . . . determine . . . background . . . comprises determine whether the service usage activity is identified by a list specifying one or more background activities."

*Supra* claim 47; *Id.* ¶¶835-37.

### E. Claim 51

#### 1. " . . . claim 1, . . . determine a classification of the service usage activity, and based on the classification . . . , determine whether the service usage activity comprises the background activity."

*Supra* claim 47; EX-1015 ¶838.

### F. Claim 52

#### 1. " . . . claim 51, wherein the classification of the service usage activity is based on . . . <u>whether</u> . . . <u>communications over the wireless network comprise a communication associated with an e-mail download</u> . . . ."

Rao-Freund discloses or renders obvious this limitation for the reasons discussed in connection with email activity in claim 47. *Supra* claim 47; EX-1015 ¶839.

### G. Claim 53

#### 1. [53a] " . . . claim 51, . . . a first user input, and"

*Supra* §VII.A.e; EX-1015 ¶840.

#### 2. [53b] "wherein determine a classification of the service usage activity is based on . . . a second user input . . . ."

*Supra* claims 44, 47. By disclosing classifying applications based on "focus" and/or user clicks, Freund discloses a classification based on "second user input." EX-1015 ¶841.

### H. Claim 54

#### 1. " . . . claim 1, wherein determine . . . background . . . based on a user interaction with the wireless end-user device."

*Supra* claims 44, 47, [53b]. Freund classifying whether applications are or are not background activity based on "focus" and/or user clicks discloses a classification based on "a user interaction." EX-1015 ¶842.

### I. Claim 55

#### 1. " . . . claim 1, wherein determine . . . background . . . comprises determine whether a value comprising a measure of the service usage activity satisfies a condition relative to a threshold."

Freund discloses that, when an application makes a call via a WinSock API, the client monitor intercepts the call and "[m]arks the time of the call in a LastInternetAccess field." Freund, 30:16-19. The client monitor then determines whether the call "uses an Internet protocol usually associated with interactive activity," and, if it does, "marks the time of the call in a LastInteractiveAccess field of the [a]pplication's list entry." *Id.*, 30:19-24. Similarly, when the client's operating system sends keyboard and/or mouse messages, the client monitor intercepts the messages, "identifies the target . . . [a]pplication of the messages," and "marks the time" in a "LastInteractiveUse field of the [a]pplication's list entry." *Id.*, 30:30-36. Every five minutes, the client monitor determines whether the LastInteractiveAccess or LastInteractiveUse fields have changed and, if so, "add[s] one minute to a TotalInteractiveUse field." *Id.*, 30:39-43.

Freund's determining whether either the LastInteractiveAccess field or the LastInteractiveUse field has changed, and whether time should be added to TotalInteractiveUse, within a five-minute window discloses claim 55. EX-1015 ¶¶843-47. Freund uses these fields to determine whether the time of an application's active use (including its service usage activity) exceeds a threshold value of zero minutes within a five-minute span. *Id.* ¶848; Freund, 30:19-43. If time of active use exceeds the threshold within a five-minute span, Freund classifies the application as a foreground application. If not, the application is not classified, and the application is treated as background activity. EX-1015 ¶848.

Understanding that applications generally use API (e.g., WinSock API) calls to engage in network communications, a POSITA would have been motivated and found it obvious to apply Freund's teachings to accurately determine whether an application is in the foreground or not. *Id.* ¶¶849-51. A POSITA would have understood that implementing these teachings in Rao-Freund would allow the system to distinguish between foreground and background applications, as Rao and Freund suggest. *Id.*

### J. Claim 56

#### 1. " . . . claim 1, wherein determine . . . background . . . comprises determine whether the first software component is a foreground component or an unclassified component."

Rao teaches determining whether the first software component is a foreground component. *Supra* claim 50. Freund likewise teaches classifying applications as "active" if it receives user focus and/or input (e.g., is a foreground component), Freund, 3:12-16, 3:42-48, 8:63-67, 10:17-43, and provides an exemplary method for detecting such interaction, *id.*, 30:11-49, Figs. 13A-13B, 6:7-14. Under this method, if user interaction with the application is detected, the application is classified as a foreground application. *Id*. If user interaction with the application is not detected, the application is not classified by the system, *id.*, 30:11-49, Figs. 13A-13B, and is simply treated as something "other" than a foreground application (i.e., as a background application), EX-1015 ¶¶852-55.

It would have been obvious to implement these teachings by configuring the Rao-Freund system to classify applications as foreground applications (and treat their associated processes as foreground activities) or leave them unclassified (and treat their associated processes as background activities) based on user interaction. *Id.* ¶856. Doing so would allow the Rao-Freund system to distinguish between foreground and background packets and correctly prioritize them, and a POSITA

would have been able to implement Freund's decade-old method with a reasonable expectation of success. *Id.* ¶¶857-58.

### K. Claim 57

#### 1. "**. . . claim 1, wherein determine . . . background . . . comprises <u>determine whether the first software component is in a foreground of user interaction</u> . . . .**"

Rao's foreground applications are "in active use by the user." Rao ¶3. Rao teaches exemplary "interactive" applications that display user-interface-foreground content when the applications are used. *Supra* claim 54; Rao ¶¶118, 133, 140, 182, 188, 210. Freund likewise discloses examining an application to determine whether it is "active" based on "focus" and/or "user input." Freund, 10:37-43, 30:11-49.

Rao-Freund thus suggests identifying background applications based on whether the user is interacting with an application in the foreground, and a POSITA would have been motivated to apply this suggestion to determine whether service usage activity comprises background activity. *Supra, e.g.*, claim 44. EX-1015 ¶¶859-63.

## X. 35 U.S.C. § 314

The Board should not deny institution under the *Fintiv* factors based on the Related Matters identified below. That Petitioner Google is not a party to the Related Matters favors institution under all factors, and particularly Factor 5. For all other Petitioners, the statuses of the Related Matters (Factors 1-4) are either neutral or favor institution.

Factor 1 is neutral. Factor 2 favors institution. The first trial in any Related Matter is May 19, 2025. Further, the trial date is not determinative particularly because, in EDTX, multiple trials are commonly scheduled on the same date.

Factor 3 favors institution. The first Markman hearing is not until November 19, 2024, and completion of discovery and dispositive motions all follow institution. EX-1018, 4. Petitioners diligently brought this challenge approximately 6 months after receiving contentions *for all 174 claims*. *CoolIT Sys., Inc. v. Asetek Danmark A/S*, IPR2021-01195, Paper 10 at 11-14 (PTAB Dec. 28, 2021).

Factor 4 favors institution. This Petition challenges 61 claims, which will likely be greater than the number of claims tried. EX-1017 ¶¶3-4. Moreover, Patent Owner asserts the patent in multiple litigations, and resolving invalidity questions here would mitigate duplicative efforts.

If Factor 6 is considered, the compelling merits of this petition outweigh any concerns that might arise under Factors 1-5. Petitioners rely on prior art that the Office never applied, present significantly different invalidity grounds, and rely on Dr. Wolfe's declaration explaining each claim's invalidity.

## XI. 35 U.S.C. § 325

These grounds were not previously considered by the Office. Rao and Freund were not before the Examiner, and he did not discuss Fadell, which was submitted with over 700 references. After just one rejection, the independent claim was

rewritten, all 173 dependent claims were added, and the claims were allowed after a minor amendment with only a conclusory supporting rationale. EX-1015 ¶¶42-46.

## XII. MANDATORY NOTICES UNDER 37 C.F.R. § 42.8

### A. Real Party-in-Interest

Google LLC,[1] Cellco Partnership d/b/a Verizon Wireless, Verizon Corporate Services Group Inc., T-Mobile USA, Inc., Sprint LLC f/k/a Sprint Corp., AT&T Services, Inc., AT&T Mobility LLC, and AT&T Enterprises LLC[2] are the real parties-in-interest for this petition.[3]

---

[1] Google LLC is a subsidiary of XXVI Holdings Inc., which is a subsidiary of Alphabet Inc. XXVI Holdings Inc. and Alphabet Inc. are not real parties-in-interest to this proceeding.

[2] Related-Matter Defendant AT&T Corp. has undergone a corporate transaction and is now merged and converted into AT&T Enterprises, LLC.

[3] Defendant-Petitioners Cellco Partnership d/b/a Verizon Wireless, Verizon Corporate Services Group Inc., T-Mobile USA, Inc., Sprint LLC f/k/a Sprint Corp., and AT&T Services, Inc. also acknowledge that each petitioner has a number of affiliates and state that no unnamed entity is funding, is controlling, or otherwise has an opportunity to control or direct this Petition or their participation in any resulting

### B. Related Matters

The ’541 patent is, or has been, involved in the following proceedings:

| Name | Number | Forum | Filed |
|---|---|---|---|
| *Headwater Research LLC v. Verizon Communications Inc.* | 2:23-cv-00352 | E.D. Tex. | Jul. 28, 2023 |
| *Headwater Research LLC v. AT&T Inc.* | 2:23-cv-00397 | E.D. Tex. | Sept. 1, 2023 |
| *Headwater Research LLC v. AT&T Inc.* | 2:23-cv-00398[4] | E.D. Tex. | Sept. 1, 2023 |
| *Headwater Research LLC v. T-Mobile US, Inc.* | 2:23-cv-00377[5] | E.D. Tex. | Aug. 21, 2023 |
| *Headwater Research LLC v. T-Mobile US, Inc.* | 2:23-cv-00379 | E.D. Tex. | Aug. 21, 2023 |

### C. Lead and Backup Counsel Information

Petitioners provide the following designation of counsel:

| Lead Counsel | Back-Up Counsel |
|---|---|
| Erika H. Arner (Reg. No. 57,540)<br>erika.arner@finnegan.com<br>Finnegan, Henderson, Farabow, Garrett & Dunner, LLP | Daniel C. Tucker (Reg. No. 62,781)<br>daniel.tucker@finnegan.com<br>Alexander M. Boyer (Reg. No. 66,599)<br>alexander.boyer@finnegan.com |

---

IPR. Defendant-Petitioners Cellco Partnership d/b/a Verizon Wireless, Verizon Corporate Services Group Inc., T-Mobile USA, Inc., Sprint LLC f/k/a Sprint Corp., and AT&T Services, Inc. are also not aware of any affiliate that would be barred from filing this Petition under 35 U.S.C. § 315(e).

[4] The -00398 case has been consolidated with the -00397 case.

[5] The -00377 case has been consolidated with the -00379 case.

| | |
|---|---|
| 1875 Explorer Street<br>Suite 800<br>Reston, VA 20190-6023<br>Tel: 571-203-2700; Fax: 202-408-4400 | Finnegan, Henderson, Farabow,<br>Garrett & Dunner, LLP<br>1875 Explorer Street<br>Suite 800<br>Reston, VA 20190-6023<br>Tel: 571-203-2700; Fax: 202-408-4400<br><br>Cara E. Regan (Reg. No. 70,209)<br>cara.regan@finnegan.com<br>Finnegan, Henderson, Farabow,<br>Garrett & Dunner, LLP<br>901 New York Ave. NW<br>Washington DC, 20001<br>Tel: 202-408-4000; Fax: 202-408-4400<br><br>Patrick D. McPherson (Reg. No. 46,255)<br>PDMcPherson@duanemorris.com<br>DUANE MORRIS LLP<br>901 New York Ave. NW<br>Suite 700 East<br>Washington, DC 20001<br>Tel: 202-776-7800; Fax: 202-776-7801<br><br>Kevin P. Anderson (Reg. No. 43,471)<br>KPAnderson@duanemorris.com<br>DUANE MORRIS LLP<br>901 New York Ave. NW<br>Suite 700 East<br>Washington, DC 20001<br>Tel: 202-776-7800; Fax: 202-776-7801 |

In concurrently filed Powers of Attorney, Google LLC has granted Power of Attorney to Practitioners at Finnegan, Henderson, Farabow, Garrett & Dunner, LLP, and Cellco Partnership d/b/a Verizon Wireless, Verizon Corporate Services Group

Inc., T-Mobile USA, Inc., Sprint LLC f/k/a Sprint Corp., and AT&T Services, Inc. have granted Power of Attorney to Practitioners at Duane Morris LLP.

Petitioners consent to service by email at the addresses listed above and Headwater-541-IPRs@Finnegan.com, PDMcPherson@duanemorris.com, and KPAnderson@duanemorris.com.

## XIII. CONCLUSION

Petitioners respectfully request that the Board grant IPR and find all challenged claims unpatentable.

Dated: June 7, 2024

By: /Erika H. Arner/
Erika H. Arner (Reg. No. 57,540)

## CERTIFICATE OF COMPLIANCE

Pursuant to 37 C.F.R. § 42.24(a)(1)(i), the undersigned hereby certifies that the foregoing PETITION FOR *INTER PARTES* REVIEW OF U.S. PATENT NO. 8,589,541 contains 13,957 words, excluding parts of this Petition exempted under § 42.24(a), as measured by the word-processing system used to prepare this paper.

Dated: June 7, 2024

/Daniel C. Tucker/
Daniel C. Tucker (Reg. No. 62,781)
Counsel for Petitioner

## CERTIFICATE OF SERVICE

Pursuant to 37 C.F.R. §§ 42.6(e) and 42.105(a), the undersigned certifies that on June 7, 2024, a copy of the foregoing **Petition for *Inter Partes* Review**, **the associated powers of attorney**, and **Exhibits 1001-1018, and 1020-1022** were served by FedEx Priority Overnight on the correspondence address of record indicated in the Patent Office's public Patent Center system for U.S. Patent No. 8,589,541:

Dr. Greg Raleigh
Headwater Research LLC
110 North College Avenue, Suite 1116
Tyler, TX 75702

Dated: June 7, 2024

By: /William Esper/
William Esper
Case Manager and PTAB Coordinator
Finnegan, Henderson, Farabow,
Garrett & Dunner, L.L.P