IN THE UNITED STATES PATENT AND TRADEMARK OFFICE

BEFORE THE PATENT TRIAL AND APPEAL BOARD

CELLCO PARTNERSHIP D/B/A VERIZON WIRELESS, T-MOBILE USA, INC., AT&T SERVICES INC., AT&T MOBILITY LLC, AT&T CORP., NOKIA OF AMERICA CORPORATION, ERICSSON INC.

Petitioners,

v.

COBBLESTONE WIRELESS, LLC,

Patent Owner.

Case No. IPR2024-00946

U.S. Patent No. 7,924,802

PETITION FOR *INTER PARTES* REVIEW OF U.S. PATENT NO. 7,924,802

TABLE OF CONTENTS

Page

I. INTRODUCTION 1

II. STANDING 4

III. GROUNDS 4

IV. POSITA 4

V. BACKGROUND 5

A. Technical Background (Ex. 1003, ¶¶52-60) 5

B. '802 Patent (Ex. 1003, ¶¶61-64) 6

1. Prosecution History 9

2. Claim Construction 10

C. Prior Art 10

1. Rick (Ex. 1021) 10

2. Suzuki (Ex. 1004) 10

3. Fernandez (Ex. 1005) 11

VI. GROUNDS OF REJECTION 12

A. Ground 1: Claim 1 is Rendered Obvious by Rick 12

1. 1pre 13

(a) 1a 13

(b) 1b 15

B. Ground 2: Claims 1-4, 6-8, 10, 13, 17, 21-22, and 24 are obvious over Suzuki 17

1. 1pre 19

(a) 1a 19

(b) 1b 21

2. Claim 2 25

3. Claim 3 26

4. Claim 4 27

5. Claim 6 29

6. Claim 7 30

7. Claim 8 30

8. Claim 10 31

(a) 10pre 32
(b) 10a/10b 32
(c) 10c/10d 34
(d) 10e/10f 37
(e) 10g 42
(f) 10h 43
(g) 10i 44
(h) 10j 45

9. Claims 13, 17, 21 45

10. Claim 22 46

C. Ground 3: Claims 7-9, 22, and 23 are obvious over Suzuki and Jalali 47

1. Motivation to Combine 48

2. Claims 7, 8, and 22 51

3. Claims 9 and 23 52

D. Ground 4: Claims 14 and 24-25 are obvious over Suzuki and Chen 56

1. Motivation to Combine 57

2. Claim 14 61

(a) 14pre 61
(b) 14a 61
(c) 14b 62
(d) 14c 64
(e) 14d 66

3. Claim 24pre 68

(a) Claim 24a 68
(b) Claim 24b 69
(c) Claim 24c 70

E. Ground 5: Claims 6, 13, and 21 are obvious over Suzuki and Etemad 71

F. Ground 6: Claims 1-4, 6-8, 10, 13, 17, 21-22, and 24 are obvious over Fernandez and Montojo 75

1. Motivation to Combine 75
2. 1pre 79
(a) 1a 80
(b) 1b 81
3. Claim 2 82
4. Claim 3 83
5. Claim 4 85
6. Claim 6 86
7. Claims 7 and 8 86
8. 10pre 87
(a) 10a/10b 87
(b) 10c/10d 88
(c) 10e/10f 90
(d) 10g 93
(e) 10h 94
(f) 10i 95
(g) 10j 96
9. Claims 13, 17, 21 96
10. Claim 22 97
G. Ground 7: Claims 7-9, 22, and 23 are obvious over Fernandez, Montojo, and Jalali 98
1. Motivation to Combine 98
2. Claims 7, 8, and 22 99
3. Claims 9 and 23 99
H. Ground 8: Claims 14 and 24-25 are obvious over Fernandez, Montojo and Chen 99
I. Ground 9: Claims 6, 13, and 21 are obvious over Fernandez, Montojo, and Etemad 100
VII. *FINTIV* 101
VIII. MANDATORY NOTICES AND FEES 102
A. Real Party-In-Interest 102

B. Related Matters 103

C. Counsel and Service Information 103

D. Payment of Fees 104

IX. CONCLUSION 105

EXHIBIT LIST

Ex.	Description
1001	U.S. Patent No. 7,924,802 ("'802 Patent")
1002	Prosecution History for 7,924,802
1003	Declaration of Dr. Kevin Almeroth
1004	U.S. Patent Pub. No. 2006/0276146A1 ("Suzuki")
1005	U.S. Patent Pub. No. 2009/0052556A1 ("Fernandez")
1006	U.S. Patent Pub. No. 2005/0135312A1 ("Montojo")
1007	U.S. Patent Pub. No. 2005/0249266A1 ("Brown")
1008	U.S. Patent No. 6,952,454 ("Jalali")
1009	U.S. Patent No. 6,359,868 ("Chen")
1010	U.S. Patent No. 7,136,430 ("Morris")
1011	U.S. Patent No. 7,460,615 ("Kunysz")
1012	U.S. Patent No. 7,133,697 ("Judd")
1013	Cobblestone Wireless, LLC v. Cellco Partnership D/B/A Verizon Wireless. et al., 2:23-cv-00382-JRG-RSP (E.D. Tex.) (Lead Case), Plaintiff Cobblestone Wireless, LLC's Preliminary Disclosure of Asserted Claims and Infringement Contentions, Exhibit A (served December 11, 2023)
1014	U.S. Patent No. 8,036,702 ("Etemad")
1015	John A. C. Bingham, Multicarrier Modulation for Data Transmission: An Idea Whose Time Has Come, IEEE Comms. Magazine (1990)
1016	Mischa Schwartz et al., Origins of Carrier Multiplexing - Major George Owen Squeir and AT&T (June 2008)
1017	U.S. Patent No. 980,357

1018	U.S. Patent No. 980,359
1019	U.S. Patent No. 980,356
1020	Nickolas LaSorte et al., The History of Orthogonal Frequency Division Multiplexing (Jan. 2008)
1021	U.S. Patent No. 8,693,525 ("Rick")
1022	Curriculum Vitae of Dr. Kevin Almeroth
1023	Lathi, Modern Digital and Analog Communication Systems, Third Edition, Oxford University Press (1998)
1024	U.S. Patent No. 6,154,661
1025	Cassan, Gola, "A 3.5 GHz 25 W Silicon LDMOS RFIC power amplifier for WiMAX applications," 2007 IEEE Radio Frequency Integrated Circuits Symposium
1026	Zyren, "Overview of the 3GPP Long Term Evolution Physical Layer," July 2007 (available at https://web.archive.org/web/20081122142941/ http://www.freescale.com/files/wireless_comm/doc/white_paper/ 3GPPEVOLUTIONWP.pdf)
1027	U.S. Patent Pub. No. 20070280098
1028	Cobblestone Wireless, LLC v. AT&T Services Inc. et al. (E.D. Tex.) (Member Case), Plaintiff Cobblestone Wireless, LLC's Preliminary Disclosure of Asserted Claims and Infringement Contentions, Exhibit A (served December 11, 2023)
1029	Cobblestone Wireless, LLC v. T-Mobile USA, Inc. (E.D. Tex.) (Member Case), Plaintiff Cobblestone Wireless, LLC's Preliminary Disclosure of Asserted Claims and Infringement Contentions, Exhibit A (served December 11, 2023)

LIST OF CHALLENGED CLAIMS

Claim	Limitation
1pre	A method of transmitting information in a wireless communication channel comprising:
1a	transmitting first information across a first frequency range using a wireless transmitter, the first frequency range having a first center frequency, a first highest frequency, and a first lowest frequency; and
1b	simultaneously transmitting second information across a second frequency range using the same wireless transmitter, the second frequency range having a second center frequency greater than the first center frequency, a second highest frequency, and a second lowest frequency.
2	The method of claim 1 wherein frequency difference between the first center frequency and the second center frequency is greater than the sum of one-half the first frequency range and one-half the second frequency range.
3	The method of claim 1 wherein the first and second information are transmitted using the same power amplifier in said wireless transmitter.
4	The method of claim 3 wherein the bandwidth of said power amplifier is greater than the difference between the first lowest frequency and the second highest frequency.
6	The method of claim 1 wherein the first information corresponds to a first wireless protocol and the second information corresponds to a second wireless protocol.

Claim	Limitation
7	The method of claim 1 wherein the first information and the second information are the same data transmitted across two different frequencies.
8	The method of claim 1 wherein the first information and the second information are from the same data stream.
9	The method of claim 1 wherein first information and second information comprise a plurality of OFDM symbols, wherein a first symbol is transmitted during a first time slot across the first frequency range and a second symbol is transmitted during the first time slot across the second frequency range, and wherein a third symbol is transmitted during a second time slot across the first frequency range and a fourth symbol is transmitted during the second time slot across a second frequency range
10pre	A method of transmitting information in a wireless communication channel comprising:
10a	receiving a first digital signal comprising first data to be transmitted;
10b	receiving a second digital signal comprising second data to be transmitted;
10c	converting the first digital signal into a first analog signal using a first digital-to-analog converter, the first analog signal carrying the first data across a first frequency range;
10d	converting the second digital signal into a second analog signal using a second digital-to-analog converter, the second analog signal carrying the second data across a second frequency range;

Claim	Limitation
10e	up-converting the first analog signal to a first RF center frequency to produce a first up-converted analog signal, wherein the first up-converted analog signal comprises a first up- converted frequency range from the first RF center frequency minus one-half the first frequency range to the first RF center frequency plus one-half the first frequency range;
10f	up-converting the second analog signal to a second RF center frequency greater than the first center RF frequency to produce a second up-converted analog signal, wherein the second up-converted analog signal comprises a second up-converted frequency range from the second RF center frequency minus one-half the second frequency range to the second RF center frequency plus one-half the second frequency range, and wherein a frequency difference between the first RF center frequency and the second RF center frequency is greater than the sum of one-half the first frequency range and one-half the second frequency range;
10g	combining the first up-converted analog signal and the second up-converted analog signal to produce a combined up-converted signal;
10h	amplifying the combined up-converted signal in a power amplifier resulting in an amplified combined up-converted signal; and
10i	transmitting the amplified combined up-converted signal on a first antenna,
10j	wherein the bandwidth of said power amplifier is greater than the difference between a lowest frequency in the first up-converted frequency range and a highest frequency in the second up-converted frequency range.

Claim	Limitation
13	The method of claim 10 wherein the first digital signal is encoded using a first wireless protocol and the second digital signal is encoded using a second wireless protocol.
14pre	The method of claim 10 wherein the second data is the same as the first data, the method further comprising:
14a	receiving the transmitted signal on a second antenna;
14b	amplifying the received signal in a low noise amplifier resulting in an amplified received up-converted signal, wherein the bandwidth of said low noise amplifier is greater than the difference between the lowest frequency in the first up-converted frequency range and the highest frequency in the second up-converted frequency range;
14c	down-converting the amplified received up-converted signal using a first down-converter and a signal corresponding to the first RF center frequency to produce a fourth analog signal corresponding to the first analog signal; and
14d	down-converting the amplified received up-converted analog signal using a second down-converter and a signal corresponding to the second RF center frequency to produce a fifth analog signal corresponding to the second analog signal.
17pre	A wireless communication system comprising:
17a	a baseband digital system for providing a first digital signal comprising a first data to be transmitted and a second digital signal comprising a second data to be transmitted;

Claim	Limitation
17b	a first digital-to-analog converter for receiving the first digital signal and converting the first digital signal into a first analog signal, the first analog signal carrying the first data across a first frequency range;
17c	a second digital-to-analog converter for receiving the second digital signal and converting the second digital signal into a second analog signal, the second analog signal carrying the second data across a second frequency range;
17d	a first up-converter circuit having a first input coupled to receive the first analog signal and a second input coupled to receive a first modulation signal having a first RF frequency, wherein the first up-converter outputs a first up-converted analog signal comprising a first up-converted frequency range from the first RF frequency minus one-half the first frequency range to the first RF frequency plus one-half the first frequency range;
17e	a second up-converter circuit having a first input coupled to receive the second analog signal and a second input coupled to receive a second modulation signal having a second RF frequency, wherein the second up-converter outputs a second up-converted analog signal comprising a second up-converted frequency range from the second RF frequency minus one-half the second frequency range to the second RF frequency plus one-half the second frequency range, and wherein frequency difference between the first RF frequency and the second RF frequency is greater than the sum of one-half the first frequency range and one-half the second frequency range; and
17f	a power amplifier coupled to receive the first and second up-converted analog signals, wherein the bandwidth of the power amplifier is greater than the difference between a lowest frequency in the first up-converted frequency range and a highest frequency in the second up-converted frequency range.

Claim	Limitation
21	The communication system of claim 17 wherein the first data of the first digital signal is encoded using a first wireless protocol and the first data of the second digital signal is encoded using a second wireless protocol.
22	The communication system of claim 17 wherein the second data corresponds to the first data and wherein the power amplifier outputs a third up-converted signal comprising the up-converted first analog signal and the up-converted second analog signal.
23	The communication system of claim 17 wherein first and second data to be transmitted comprise a plurality of OFDM symbols, wherein a first symbol is transmitted during a first time slot across the first up-converted frequency range and a second symbol is transmitted during the first time slot across the second up-converted frequency range, and wherein a third symbol is transmitted during a second time slot across the first up-converted frequency range and a fourth symbol is transmitted during the second time slot across a second up-converted frequency range.
24pre	An electronic circuit comprising:
24a	a first down-converter circuit having a first input coupled to receive a first up-converted signal, a second input coupled to receive a first demodulation signal having a first RF frequency, and an output, wherein the first down-converter circuit outputs a first down-converted signal on the first down-converter output;

Claim	Limitation
24b	a second down-converter circuit having a first input coupled to receive the first up-converted signal, a second input coupled to receive a second demodulation signal having a second RF frequency different than the first RF frequency, and an output, wherein the second down-converter outputs a second down-converted signal on the second down-converter output, wherein the first up-converted signal comprises a first signal modulated at the first RF frequency and a second signal modulated at the second RF frequency; and
24c	a filter having an input coupled to the output of the first down-converter and the output of the second down-converter, and in accordance therewith, the filter receives the first and second down-converted signals.

I. INTRODUCTION

The '802 patent is directed to the well-known technique of *multi-carrier transmission*, where a signal is transmitted over multiple frequency ranges, each carrying its own information. The claims recite the basic concept of a multi-carrier transmission (claim 1), a method/system for multi-carrier transmission using well-known components (such as DACs and amplifiers) (claims 10 and 17), and a receiver that down-converts multi-carrier transmissions (claim 24). Figure 3 depicts the claimed multi-carrier signal.

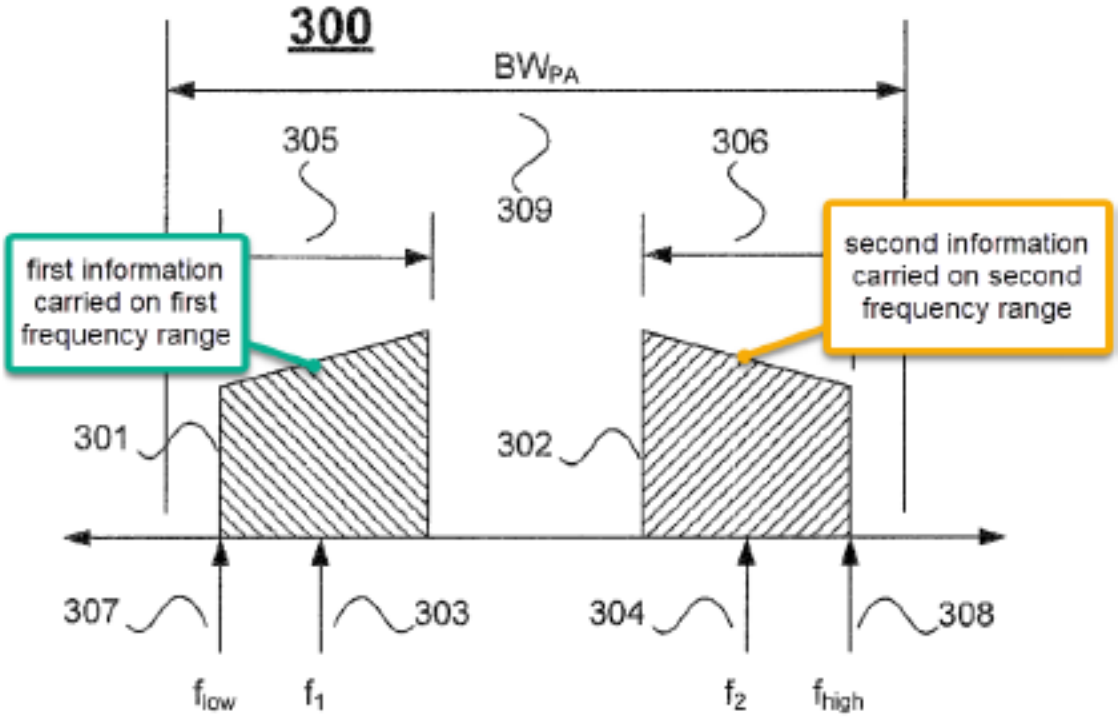

Fig. 3

The patent's purported improvement over the prior art is simple: it transmits information on *multiple* frequencies simultaneously while the prior art (as described by the '802 patent) purportedly only uses a single frequency range. Ex. 1001, 1:12-56 (purporting to describe prior art as limited to maximizing bandwidth around a single center frequency).

Yet multi-carrier signals, a.k.a. frequency multiplexing, had been known for decades, including as disclosed in the Petition's three primary references from Qualcomm, NTT Docomo, and Agilent Technologies. These mid-2000s references all disclose multi-carrier communications systems.

Rick (Ex. 1021) is a 2006 Qualcomm patent directed to a "multi-carrier transmitter for wireless communication" that "can transmit one or multiple CDMA signals simultaneously" (3:13-14), on different CDMA channels. For example, Figure 1 shows N pieces of information transmitted simultaneously on different CDMA channels (each a different frequency band) (3:13-47):

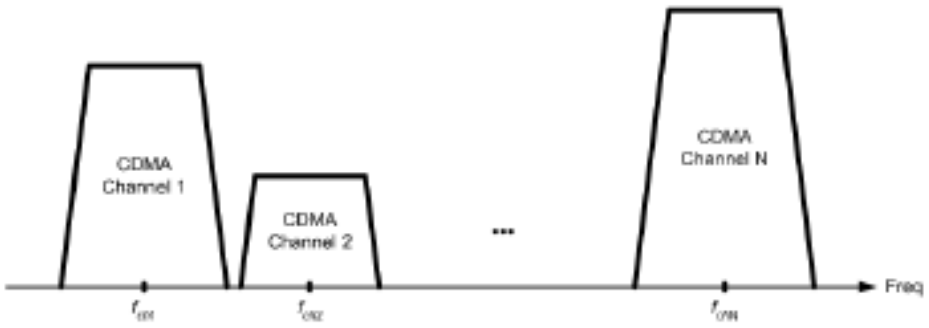

FIG. 1

Suzuki (Ex. 1004) is a 2006 NTT Docomo application that recognizes "multi-band wireless system[s] [have] been known," and teaches a "predistorter that compensates" distortion from amplifying a multi-carrier signal. Suzuki's system outputs distortion-compensated signals across multiple frequency bands, as shown in Figure 13A, for example:

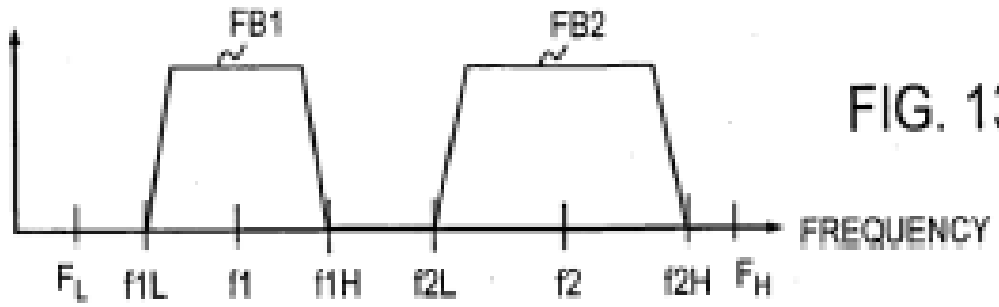

FIG. 13A

Fernandez (Ex. 1005), a 2007 Agilent application, also discloses that multi-carrier signals such as depicted in Figure 2B were well-known:

FIG. 2B

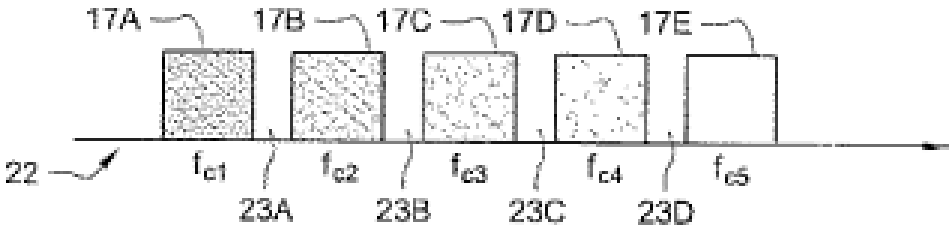

The '802 patent added nothing to this deep body of knowledge. The patent claims and specification contain a limited, superficial disclosure of the basic concepts of multi-carrier transmission that were well-known and obvious at the time.

II. STANDING

Petitioners certify the ’802 patent is available for *inter partes* review and they are not estopped.

III. GROUNDS

Petitioners present three sets of Grounds based on Rick (Ground 1), Suzuki (Grounds 2-5), and Fernandez-Montojo (Grounds 6-9).

Ground	Basis	Reference(s)	Claims
1	§103	Rick	1
2	§103	Suzuki	1-4, 6-8, 10, 13, 17, 21- 22
3	§103	Suzuki, Jalali	7-9, 22-23
4	§103	Suzuki, Chen	14, 24-25
5	§103	Suzuki, Etemad	6, 13, 21
6	§103	Fernandez, Montojo	1-4, 6-8, 10, 13, 17, 21- 22
7	§103	Fernandez, Montojo, Jalali	7-9, 22-23
8	§103	Fernandez, Montojo, Chen	14, 24-25
9	§103	Fernandez, Montojo, Etemad	6, 13, 21

IV. POSITA

A POSITA at the time of the ’802 patent had at least a bachelor’s in EE/CE/CS, physics, or equivalent, and two years of experience with cellular telecommunications, radio-access network architectures, protocols and signal propagation in wireless networks. Ex. 1003, ¶¶50-51. More education can supplement practical experience and vice versa. Id. Petitioners’ expert exceeded this by the priority date. *Id.*

V. BACKGROUND

A. Technical Background (Ex. 1003, ¶¶52-60)

When wirelessly transmitting information, information is first converted into an electromagnetic signal known as a ***baseband signal***. Ex. 1023, 10. These signals are converted to higher frequencies (e.g., radio frequencies) using ***modulation***, where a high-frequency carrier wave (a carrier frequency) is modulated on one of its parameters (e.g., amplitude, frequency, or phase) to carry the information. *Id.*

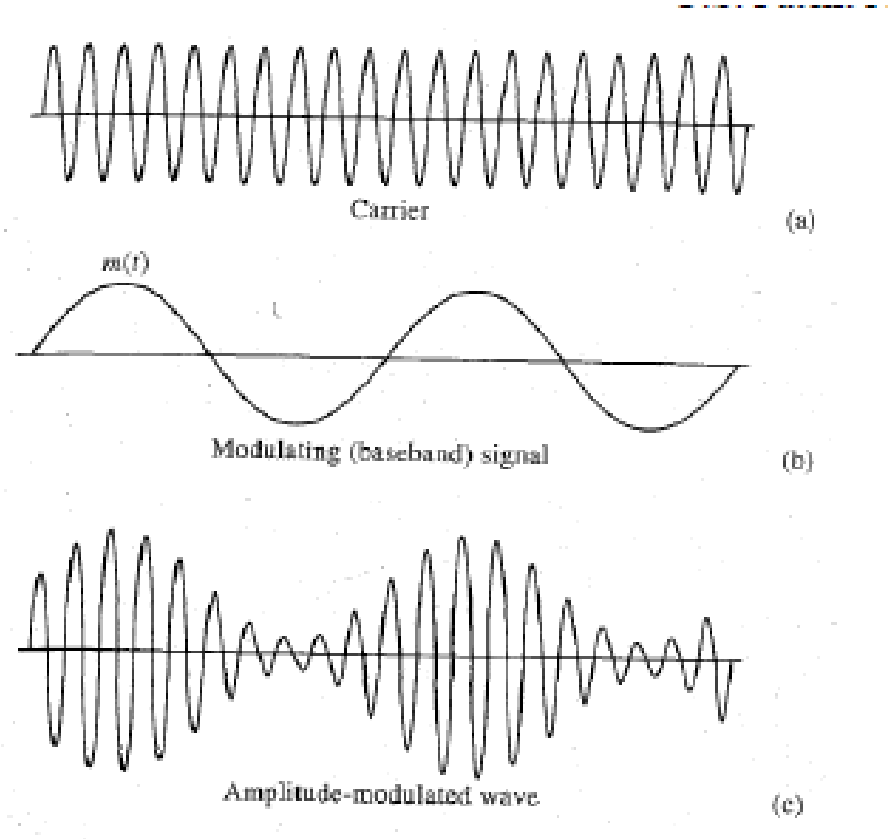

Multiple baseband signals cannot be transmitted simultaneously because they "interfere with each other." *Id.*, 16. Solutions had long been known. Even the introduction of a 1998 college textbook recognized that ***frequency-division***

multiplexing solves this problem. *Id*. In FDM, different carrier frequencies are modulated with different signals and "chosen sufficiently far apart" to allow "transmit[ting] ***simultaneously***" without interference. *Id.* This is known as a multi-carrier signal.

Frequency multiplexing has been known for over a century. Exs. 1015-19. In 1957, Collins Radio employed frequency multiplexing for radio. Ex. 1020. And orthogonal frequency-division multiplexing ("OFDM"), introduced in 1966, is used in numerous wireless standards, including WiFi, WiMAX, and LTE. *Id.*

B. '802 Patent (Ex. 1003, ¶¶61-64)

The patent incorrectly assumes that prior art systems were limited to ***single-carrier*** transmissions and ignores the massive body of frequency multiplexing systems. Indeed, it states in prior art systems (*e.g.* Figure 1), a transmission is generated from a single input, converted to analog, then up-converted (*i.e.*, modulated) to a signal centered around "***one*** center frequency." Ex. 1001, 1:17-32. This transmission is "limited by the bandwidth of the transmitter around the center frequency" which "limits the amount of data that can be transmitted." *Id*., 1:37-40.

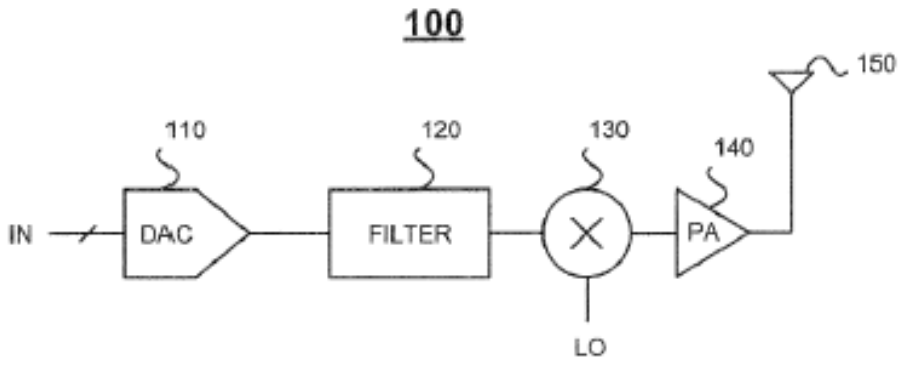

Fig. 1
(prior art)

The ’802 patent purports to improve on such systems by describing ***precisely*** what the prior art described for decades—simultaneously transmitting information over multiple frequency bands, each centered around a different center frequency. The system of the ’802 patent simply runs two prior art circuits in parallel and combines the two signals to be transmitted simultaneously (Ex. 1001, 5:53-6:9):

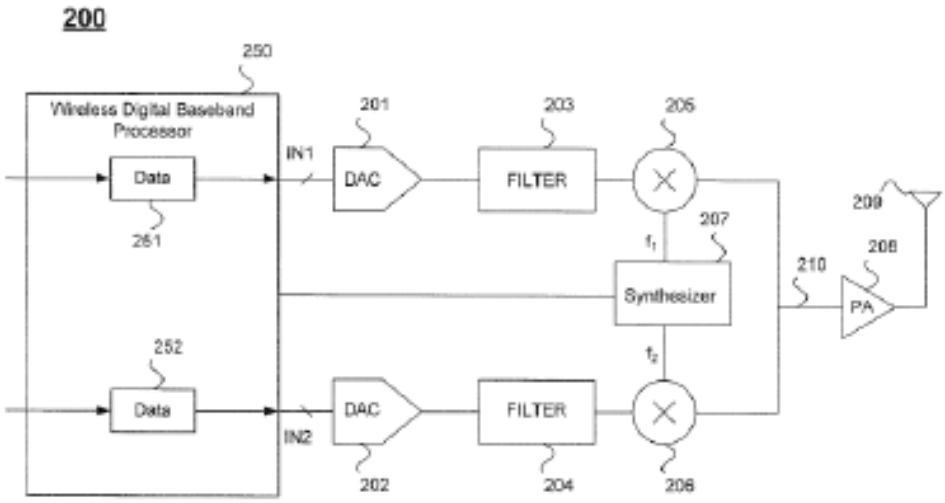

Fig. 2

Figure 3 shows the transmitted signal, where one input has center frequency f1 and another has higher center frequency f2. Ex. 1001, 6:22-34. Claim 1 claims this signal transmission.

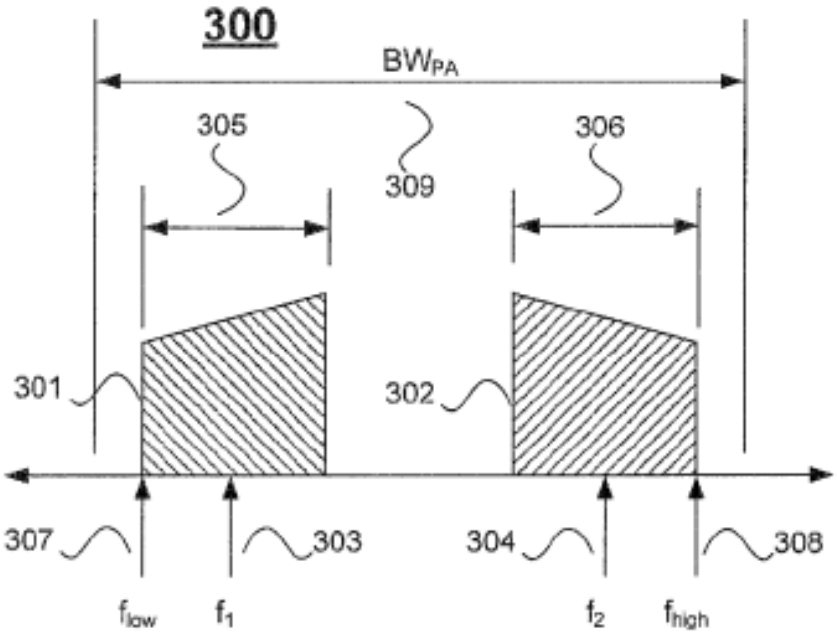

Fig. 3

Yet this claimed transmission is no different than what was known for years—*e.g.,* Suzuki discloses simultaneously transmitting information over frequency bands FB1 and FB2:

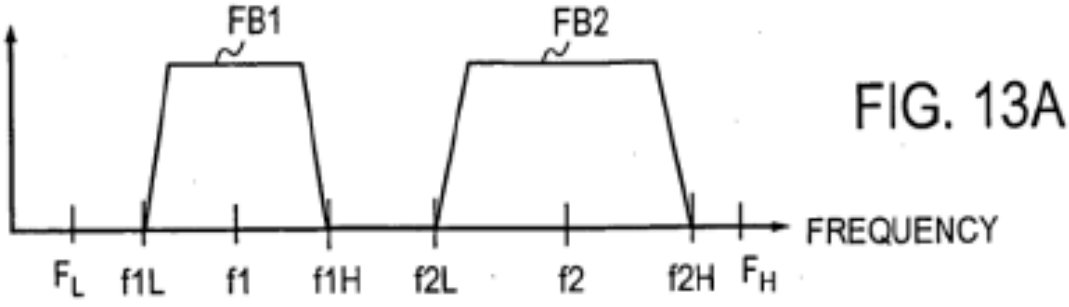

FIG. 13A

1. Prosecution History

The examiner issued no rejections during prosecution, stating in the notice of allowance that the cited prior art does not disclose simultaneous transmission using

a single antenna, up-converting or down-converting. Ex. 1002, 19-20; Ex. 1003, ¶¶65-67.

2. Claim Construction

Unless otherwise indicated, and for this proceeding only, the claim terms should be given their plain and ordinary meaning under *Phillips*. Ex. 1003, ¶¶68- 69.

C. Prior Art

1. Rick (Ex. 1021)

Rick discloses "[a] multi-carrier transmitter capable of transmitting on … multiple frequency channels ***simultaneously***." Ex. 1021, 1:48-50, 2:38-39. Rick's system is illustrated in connection with Fig. 1 and is discussed below in Ground 1. Id., 3:19-26; Ex. 1003, ¶¶70-72.

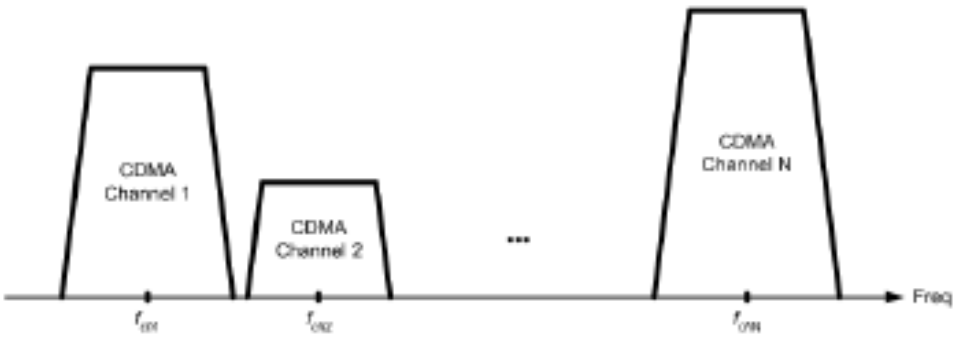

FIG. 1

2. Suzuki (Ex. 1004)

Suzuki likewise teaches the systems and transmissions claimed by the '802 patent. Suzuki's systems and signal are illustrated in Figures 6 and 13A, and are discussed below in Grounds 2-5. Ex. 1003, ¶¶73-75.

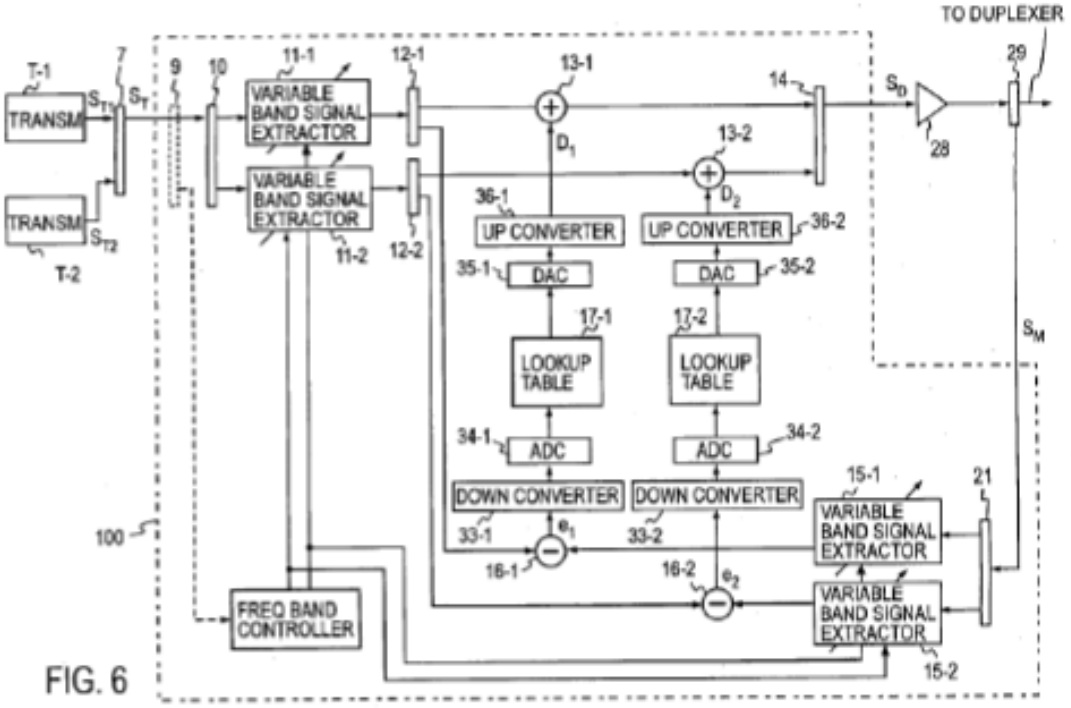

FIG. 6

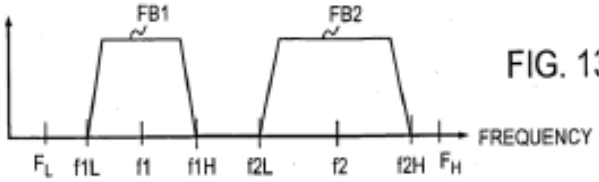

FIG. 13A

3. Fernandez (Ex. 1005)

Fernandez is also a multicarrier system, illustrated by Figures 2A and 2B, and is discussed below in Grounds 6-9. Ex. 1005, ¶8; Ex. 1003, ¶¶76-80.

FIG. 2A

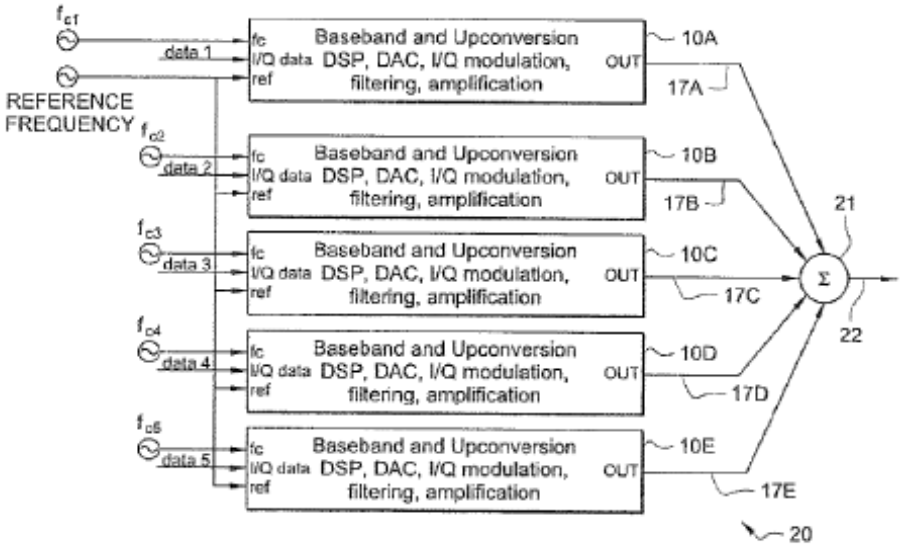

FIG. 2B

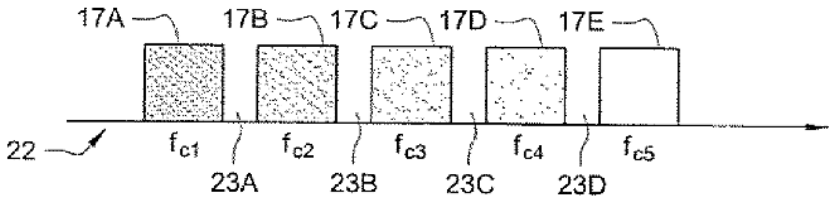

VI. GROUNDS OF REJECTION

Ground 1 is based on Qualcomm's Rick patent. Rick, like the '802 patent, discloses simultaneous transmission of multiple carriers on a single signal transmitted by an antenna. Ground 1 addresses solely claim 1 because Rick very clearly discloses every limitation of the claim. Nevertheless, Ground 1 is presented as an obviousness ground to address potential arguments Patent Owner may present. Ex. 1003, ¶81. Grounds 2-5 rely on Suzuki, and 6-9 rely on Fernandez.

A. <u>Ground 1:</u> Claim 1 is Rendered Obvious by Rick

Rick discloses "[a] multi-carrier transmitter capable of transmitting on one or multiple frequency channels ***simultaneously***." Ex. 1021, 1:48-50, 2:38-39. Rick transmits multiple "CDMA signals" each on a different frequency. Id., 3:19-26; Fig. 1; Ex. 1003, ¶¶70-72.

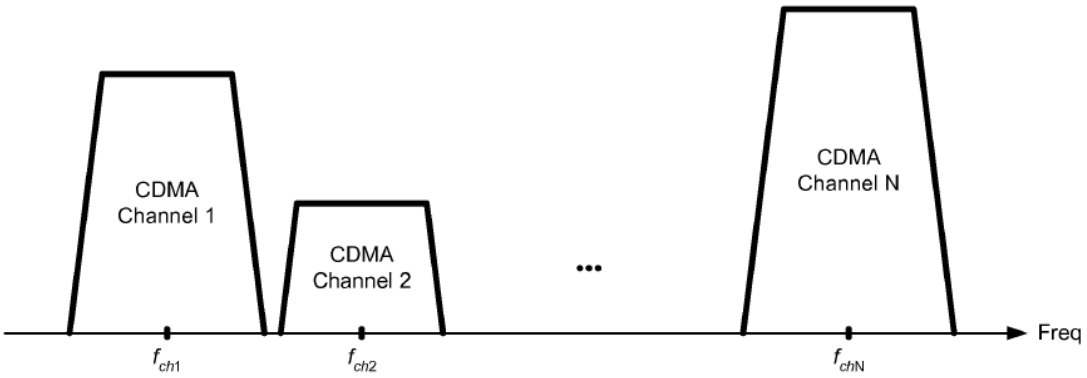

FIG. 1

1. 1pre

Rick discloses "[a] multi-carrier transmitter capable of transmitting on one or multiple frequency channels simultaneously" and that the transmitter "may be used for various wireless communication systems." Ex. 1021, 1:48-50, 2:38-39; Ex. 1003, ¶82.

(a) 1a

"Transmitting first information across a first frequency range using a wireless transmitter": Rick discloses "transmission of N CDMA signals," each of which "may carry any type of data for any service." Ex. 1021, 3:19, 3:35-36 (disclosing N>1). The data for one of the CDMA signals is a ***first information***. Ex.

1003, ¶¶83-84. These CDMA signals are transmitted on CDMA channels, the first of which has a ***first frequency range*** centered at f_{ch1} as shown in Figure 1. Id., 3:21-22. The signal is "transmitted via ***an antenna***," *i.e.* ***a wireless transmitter***. Id., 4:50-51.

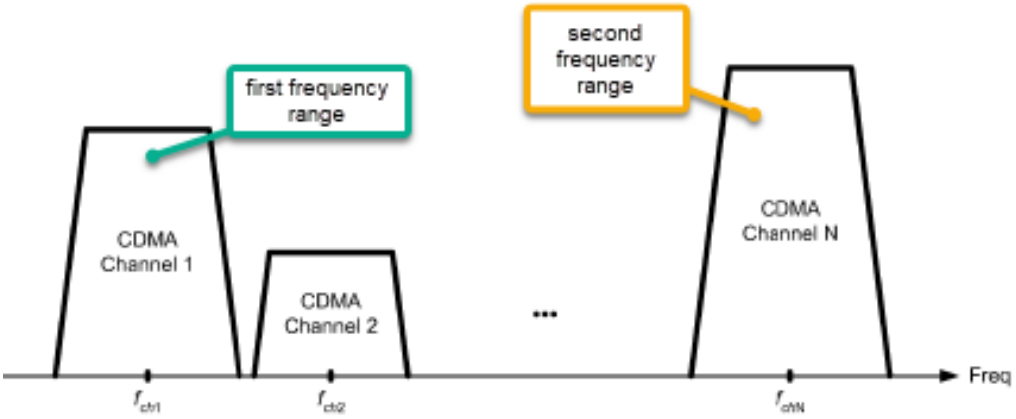

FIG. 1

"The first frequency range having a first center frequency, a first highest frequency, and a first lowest frequency": As shown in Figure 1 and described in Rick, the ***first frequency range*** has a ***first center frequency*** of f_{ch1}. Ex. 1021, 3:21-22 ("CDMA channel 1 has a carrier frequency of f_{ch1}"). A POSITA would understand "carrier frequency" refers to the center frequency of the carrier channel. Ex. 1023, 86; Ex. 1003, ¶85 (explaining modulation is centered on a carrier frequency). Moreover, Rick teaches the CDMA signal is upconverted to the carrier frequency, and a POSITA would understand such upconversion raises the frequency center of a signal to a higher frequency center. Ex. 1021, 4:11-16; Ex. 1003, ¶85.

Consistent with this understanding, Figure 1 depicts f_{ch1} in the middle of CDMA Channel 1.

Figure 1 also depicts ***first highest and lowest frequencies***, with total range being "1.228 MHz wide." Ex. 1021, 3:16-17; Ex. 1003, ¶86.

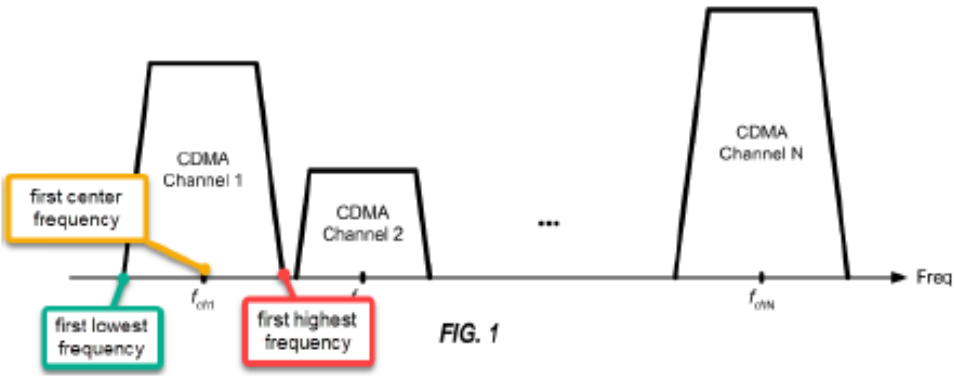

To the extent Patent Owner argues Rick does not disclose f_{ch1} is a center frequency, it would have been obvious that it is the center frequency because, as discussed above, a POSITA would understand "carrier frequency" refers to a center frequency of a channel. Ex. 1003, ¶87.

(b) 1b

"Simultaneously transmitting second information across a second frequency range using the same wireless transmitter": The "second information" is shown in Rick in Fig. 2, annotated below—it is either the CDMA data on channel 2, or the CDMA data on channel N (Ex. 1003, ¶¶88-89):

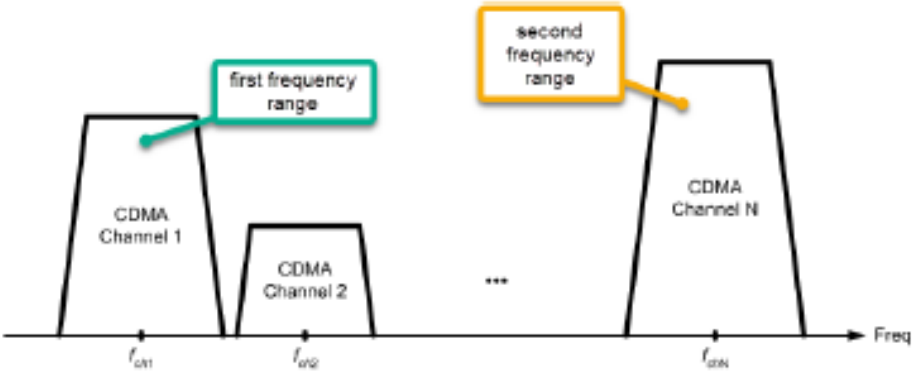

FIG. 1

Rick discloses transmitting these "multiple CDMA signals ***simultaneously***." Ex. 1021, 3:13-14. As shown above, Fig. 1 illustrates sending these signals in the frequency domain (*i.e.*, x-axis is frequency). Since one of the signals carries ***first information***, the data for another signal is ***second informati***on. Ex. 1003, ¶90. This signal is carried on either CDMA channel 2 or "CDMA channel N" which "has a carrier frequency of f_{chN}," ***i.e. a second frequency range*** centered at f_{chN}. Ex. 1021, 3:23-24. This signal carrying both first and second information is "transmitted via ***an antenna,"*** *i.e.* ***the same wireless transmitter***. Id., 4:50-51.

"the second frequency range having a second center frequency greater than the first center frequency, a second highest frequency, and a second lowest frequency": Fig. 1 is illustrated in the frequency domain, that is, frequency increases along the x-axis and shows the ***second frequency range*** has ***second center frequency*** f_{chN}. As discussed, a POSITA would understand or consider it obvious that "carrier frequency" refers to the center frequency of Channel N, and this

understanding is reflected in Figure 1. Ex. 1003, ¶91. Figure 1 depicts f_{chN} **as *greater* than fch1 (*first center frequency*)**. It also depicts ***second highest and lowest frequencies*** with total range being "1.228 MHz wide." Ex. 1021, 3:16-17.

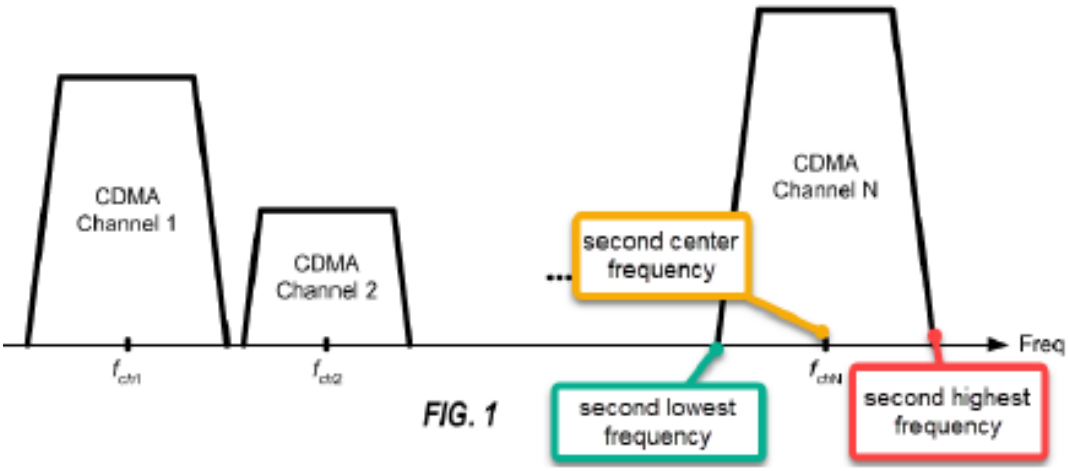

FIG. 1

B. <u>Ground 2:</u> Claims 1-4, 6-8, 10, 13, 17, 21-22, and 24 are obvious over Suzuki

Suzuki discloses various embodiments that predistort carrier signals in a multi-carrier transmission system before combining them for simultaneous transmission. Ex. 1003, ¶¶92-93. In Suzuki, the predistorter input is "transmitting signal ST," which includes "dual frequency bands of transmitting signals." Ex. 1004, ¶¶44-45 (explaining "the predistorter can be adapted for signals in three or more frequency bands"). Figure 13A is a depiction of information from signal ST simultaneously transmitted over two frequency bands FB1 and FB2. *Id.*, ¶79.

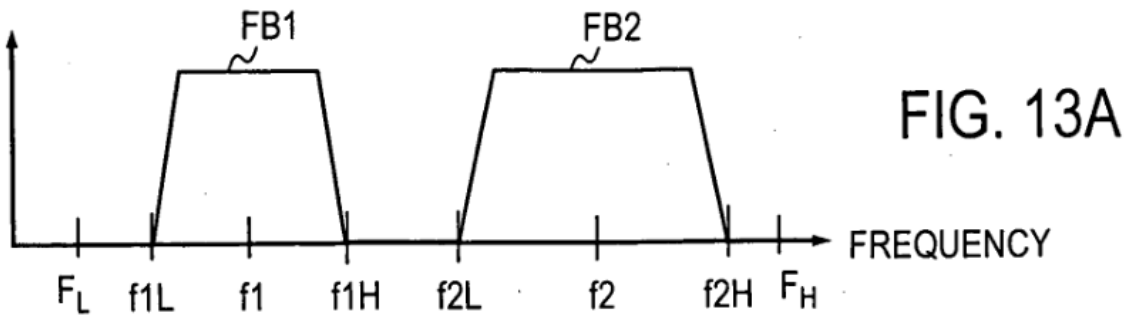

Suzuki's predistorters extract the signals in each of the frequency bands (*e.g.* FB1 and FB2), predistort each one, combine them, then simultaneously transmit them. Ex. 1003, ¶94.

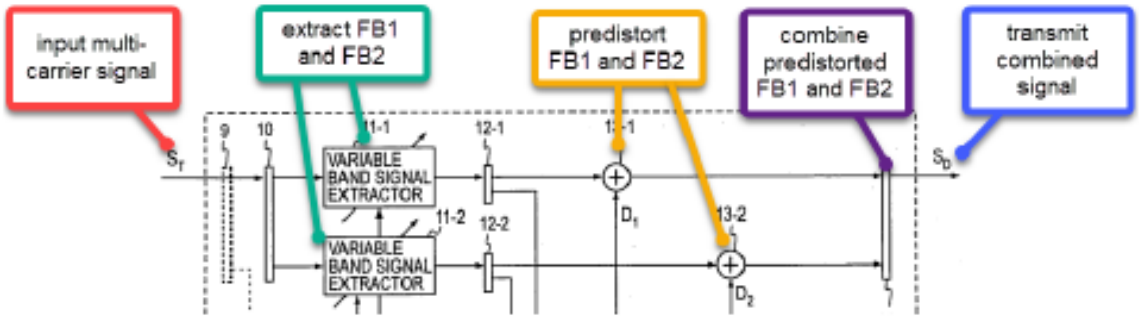

The predistorter's output signal has the same frequency bands as the input signal S_T, and thus Figure 13A also depicts the predistorter's output signal. Ex. 1003, ¶95. Besides that the steps of extraction, predistortion, and recombining would not alter the frequency bands of the input signal, Suzuki teaches the output signal is sent as SM to signal extractors 15-1 and 15-2, which "extract signals in the ***same frequency bands*** as those of the variable band signal extractors 11-1 and 11- 2, respectively." *Id.*, ¶46. Signal extractors 11-1 and 11-2 extract signals from input

signal S_T. *Id.*, ¶45. Thus, the predistorter's output must have the same frequency bands as input signal S_T.

1. 1pre

Suzuki discloses a predistorter for existing "multi-band ***wireless system[s]***" that transmit a "multi-band transmission" making "use of one or more … frequency bands." Ex. 1004, ¶¶6-10; Ex. 1003, ¶96.

(a) 1a

"***Transmitting first information across a first frequency range using a wireless transmitter":*** Suzuki discloses that Figure 13A (which as explained above depicts the predistorter output) depicts transmission of FB1 (a transmission of ***first information across a first frequency range***). Ex. 1003, ¶¶97-98.

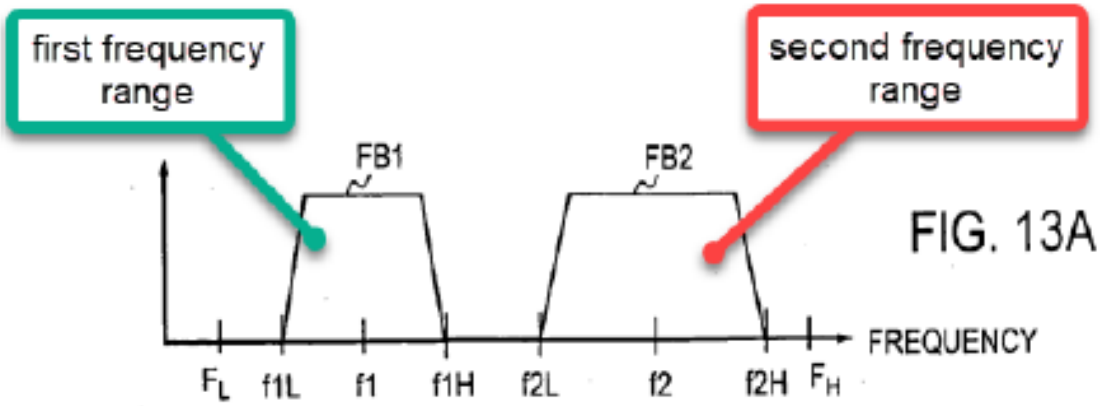

Suzuki states the predistorter output is formed by combining (at combiner 14) predistorted signals from adders 13-1 and 13-2. Ex. 1004, ¶45. Thus, one of the predistorted signals is the ***first information***. Ex. 1003, ¶99.

According to Suzuki, one of the predistorted signals from adders 13-1 and 13-2 (***first information***) is transmitted in one of the frequency bands in Figure 13A. Ex. 1004, ¶47 ("The adders 13-1 and 13-2 add the distortion compensation data … to signals to ***be transmitted in frequency bands*** … [T]he distortion compensation is carried out for ***each frequency band***."). Figure 13A depicts "signals in dual frequency bands FB1 and FB2 whose center frequencies are f1 and f2." Ex. 1004, ¶79. For FB1, "[t]he lower limit frequency of the frequency band FB1 is f1L and the upper limit frequency is f1H." *Id*. Thus, signal FB1 contains ***first information*** and has ***first frequency range*** f1L to f1H, with frequency center f1. Ex. 1003, ¶100. Suzuki teaches the predistorter output signal is transmitted using a ***wireless transmitter***. Ex. 1003, ¶101. For example, Suzuki teaches the output of the predistorter is "converted into a radio signal … and transmitted" by an "antenna," ***i.e. a wireless transmitter***. *Id*., ¶¶48, 63.

"***The first frequency range having a first center frequency, a first highest frequency, and a first lowest frequency":*** As shown in annotated Figure 13A, Suzuki discloses FB1 (***first frequency range***) with: (1) ***first center frequency*** f1, (2) ***first highest frequency*** f1H, and (3) ***first lowest freq***uency f1L. Ex. 1004, ¶79; Ex. 1003, ¶102.

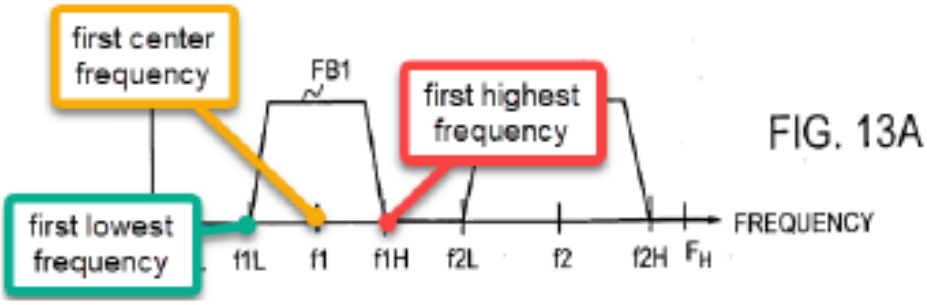

(b) 1b

"Simultaneously transmitting second information across a second frequency range using the same wireless transmitter": Figure 13A depicts transmission of FB2 (transmission of ***second information across a second frequency range***). Ex. 1003, ¶¶103-04. The predistorter output signal is depicted in Figure 13A, which includes FB2, a ***second frequency range***. Ex. 1004, ¶79 ("The transmitting signal … is assumed to include signals in dual frequency bands FB1 and FB2 whose center frequencies are f1 and f2 as shown in FIG. 13A").

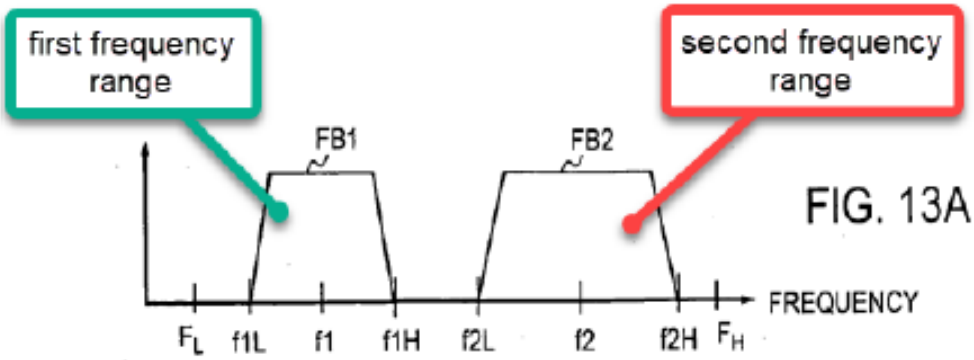

The predistorter output combines two predistorted signals from adders 13-1 and 13-2, one of which is the first information and the other is the ***second***

information. Ex. 1004, ¶45. Each predistorted signal is transmitted on a frequency band—first information transmitted in FB1 and ***second information*** transmitted in FB2. Ex. 1004, ¶47; Fig. 13A. For FB2, "[t]he lower limit frequency of the frequency band FB2 is f2L and the upper limit frequency is f2H." *Id*., ¶79. Thus, signal FB2 contains ***second information*** and has ***second frequency range*** f2L to f2H, with frequency center f2. Ex. 1003, ¶105.

With respect to "***simultaneously transmitting … using the same wireless transmitter***," the '802 patent describes that one embodiment within the scope of this claim involves "transmit[ting] the digital data simultaneously as an electromagnetic signal using two different carrier frequencies." Ex. 1001, 11:18-20. A POSITA would also understand "simultaneously transmitting" information to include transmitting the information on a single signal over a single antenna. Ex. 1003, ¶106. For example, Rick describes a "multi-carrier transmitter [that] can transmit one or multiple CDMA signals ***simultaneously***," with each signal being sent on a CDMA channel with a different frequency (*e.g*., f_{ch1}, f_{ch2}, f_{chN} in Figure 1) and "transmitted via ***an*** antenna." Ex. 1021, 3:13-24, 4:50-51, Fig. 1.

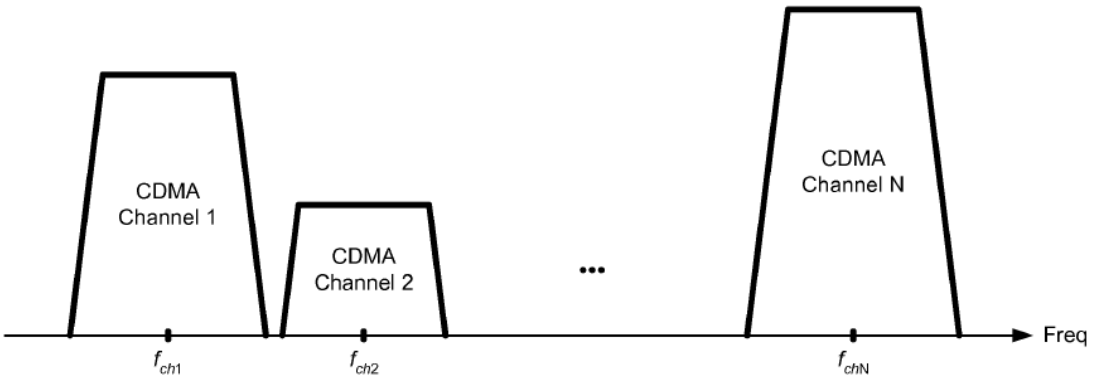

FIG. 1

Suzuki includes similar disclosure[1]: the second information is transmitted on the same signal in a different frequency band as the first information and, thus, is ***simultaneously transmitted*** with the first information using the ***same wireless transmitter***. Ex. 1003, ¶107.

The predistorter's output is formed by combining, using combiner 14, predistorted signals from adders 13-1 and 13-2 into "***the*** combined signal" with two frequency bands (as depicted in Figure 13A). Ex. 1004, ¶45. This signal is "converted into ***a*** radio signal … and transmitted" by "***an antenna***," *i.e.* the predistorter's output signal is a single signal. *Id.*, ¶¶48, 63. This single signal is transmitted by a single ***wireless transmitter*** (a single antenna), and thus

[1] Petitioner takes no position for purposes of this Petition on whether this term is definite, but for purposes of this Petition identifies disclosure that is commensurate with disclosure in the '802 patent.

simultaneously transmits the first and second information within that single signal using the ***same wireless transmitter***. *Id*., ¶7 ("[A] system for transmitting both signals in 800 MHz and in 1.5 GHz band ***simultaneously***."); Ex. 1003, ¶108.

"The second frequency range having a second center frequency greater than the first center frequency, a second highest frequency, and a second lowest frequency": As shown in annotated Figure 13A, Suzuki discloses ***second frequency range*** FB2 with: (1) ***second center frequency*** f2, (2) ***second highest frequency*** f2H, and (3) ***second lowest frequency*** f2L. Ex. 1004, ¶79; Ex. 1003, ¶109.

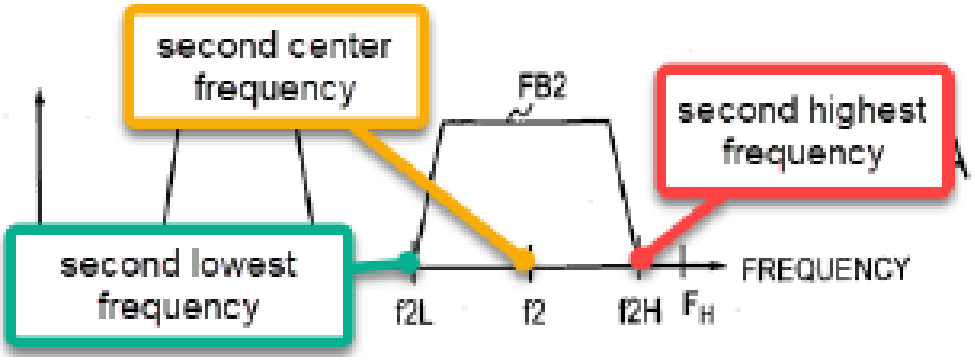

Figure 13A discloses f2 (***second center frequency***) is ***greater than*** f1 (***first center frequency***). F1 and f2 are plotted on an x-axis with increasing frequency, thus FB2 center frequency f2 has a ***second center frequency greater than the first center frequency***. Ex. 1003, ¶110.

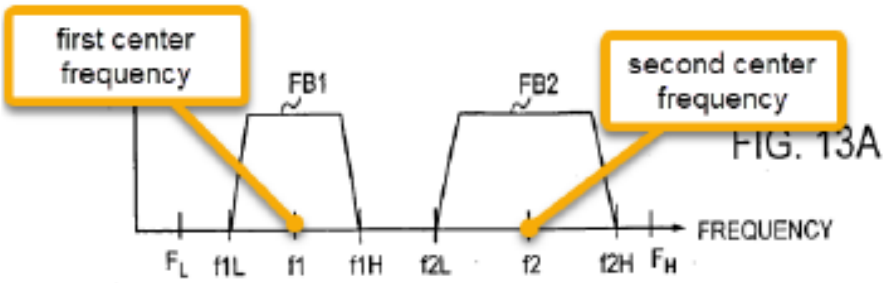

2. Claim 2

A POSITA would understand the additional limitation of claim 2 requires the first and second frequency ranges are not overlapping. Ex. 1003, ¶111.

The below annotated Figure 13A illustrates how this limitation is met by Suzuki. The length of the red arrow (the difference between first and second center frequencies) is greater than the length of the green and orange arrows combined (the sum of one half of each of the two frequency ranges). Ex. 1003, ¶112.

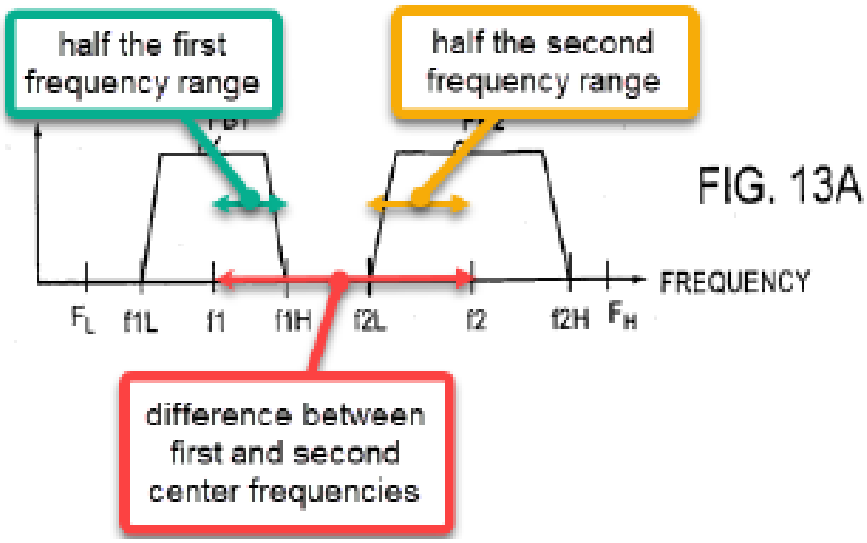

Suzuki teaches f1 and f2 are the true centers of their respective frequency ranges. Ex. 1004, ¶80; Ex. 1003, ¶113.

3. Claim 3

Suzuki teaches the predistorted signals from "adders 13-1 and 13-2" (***first and second information***) are combined and amplified by a ***single power amplifier***. Ex. 1004, ¶48 (the "combined output" is "converted into a radio signal, and then amplified by a power amplifier and transmitted"). A POSITA would understand this amplifier is ***in said wireless transmitter*** because it amplifies the signal that is "transmitted." *Id*.; ¶95 ("[T]he signals in each frequency band can be amplified by ***a common power amplifier***"); Ex. 1003, ¶114. The amplifier is also illustrated in Suzuki as being a single power amplifier—e.g., power amplifier 28 in Figure 6—that amplifies predistorter output signal SD, which includes first and second information.

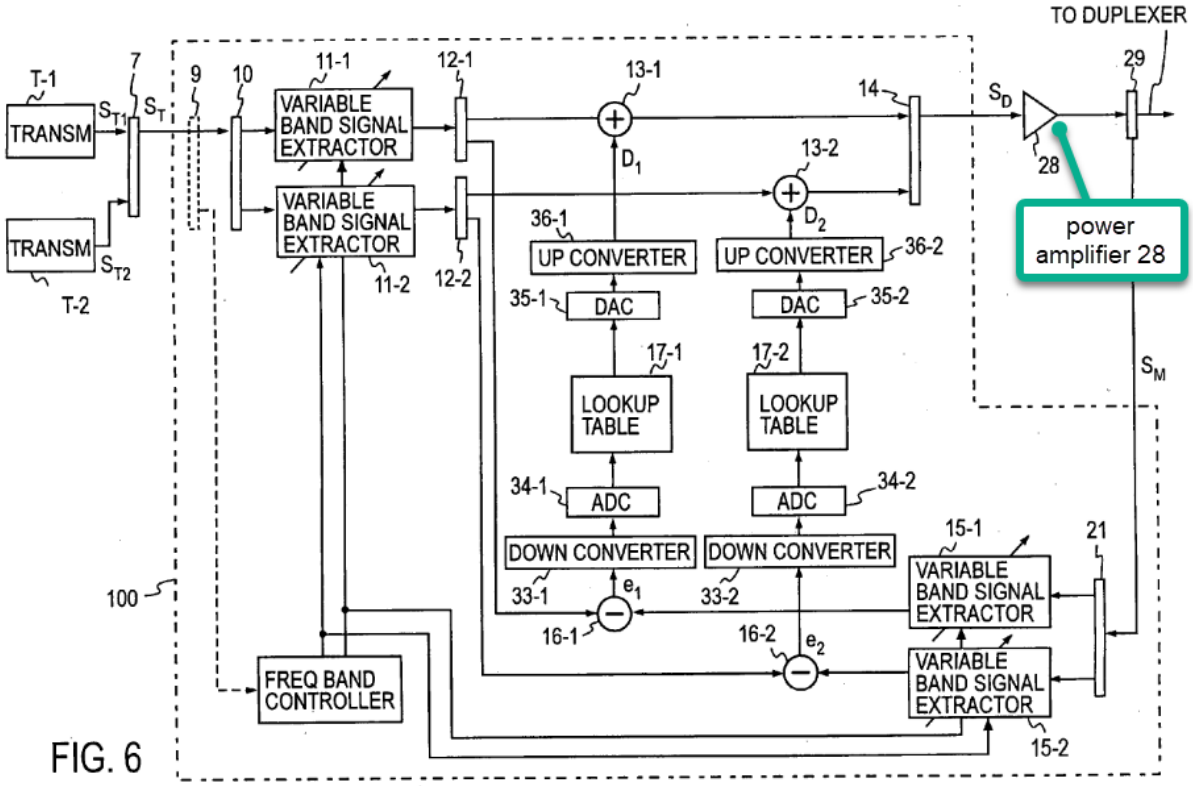

FIG. 6

A POSITA would have also considered it obvious that the amplifier is ***in the wireless transmitter***. A POSITA would understand a wireless transmitter constitutes both an amplifier and antenna. Power amplifiers convert low-power RF signals into higher-power signals to drive a transmitting antenna. It was common for wireless transmitters to contain both an amplifier and antenna for transmission given the necessity to amplify the signal to drive the antenna. A POSITA would have reasonably expected a wireless transmitter containing an amplifier and antenna to succeed because such devices were common. (Ex. 1003, ¶115).

4. Claim 4

Figure 13A depicts that the bandwidth of predistorter's output signal exceeds the difference between f1L and f2H (blue line). A POSITA would understand the bandwidth of a signal is the width of the total frequency band, which here is the difference between FH and FL in Figure 13A (red line). Ex. 1004, ¶79; Ex. 1003, ¶¶116-17.

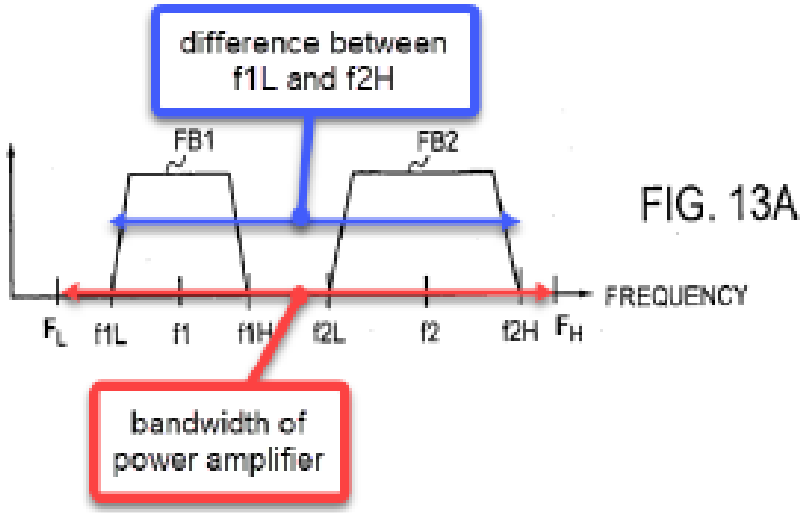

FIG. 13A

A POSITA would further understand the bandwidth of the power amplifier is at least the bandwidth of the signal it amplifies and outputs without distortion. Ex. 1003, ¶118. This is because to generate a signal with a certain bandwidth (*i.e.* width of the total frequency band), an amplifier must necessarily have a bandwidth greater than the bandwidth of the signal it generates. If the amplifier does not have a bandwidth greater than the desired signal, it would not be able to generate the signals for some of the frequency.

Indeed, Suzuki discloses certain predistortion coefficients are obtained by measuring the effect of power amplifier 28 on signals in each of the covered frequency bands, including FB1 and FB2. Ex. 1004, ¶¶61, 72. A POSITA would thus understand this requires and means the bandwidth of power amplifier 28 is wide enough to encompass all covered frequency bands, including FB1 and FB2. Ex. 1003, ¶119.

5. Claim 6

Suzuki discloses multiple ***wireless protocols***, each of which can be allocated to a frequency band that ***corresponds with first or second information***. Ex. 1003,

¶120. Specifically, Suzuki operates with "existing wireless systems, for example, PDC (Personal Digital Cellular), GSM (Global System for Mobile Communications), IMT-2000 (International Mobile Telecommunication 2000)" (***wireless protocols***) and each of these wireless protocols "allocates each frequency band." Ex. 1004, ¶4. Indeed, Suzuki is directed to a predistorter for use with "a transmission method for using the ***plurality*** of wireless systems [using] a multi-band wireless system." *Id*., ¶6. In other words, Suzuki discloses a multi-band signal in which a first frequency band uses one of the wireless protocols (PDC, GSM, IMT-2000) (***first wireless protoc***ol) and second frequency band uses a different wireless protocol (***second wireless protocol***), and that, unlike the prior art, its predistorter is able to adaptively accommodate predistortion for signals of multiple protocols and

frequency bands. *Id*., ¶¶4, 7-12 (discussing limitations of prior art multi-band wireless systems that prohibited "transmitting both [protocol] signals in 800 MHz band and in 1.5 GHz band simultaneously," and that Suzuki would allow for such systems). Since the ***first information*** is carried by the first frequency band, it ***corresponds to a first wireless protocol*** of that frequency band. Similarly, the ***second information*** (carried by the second frequency band) ***corresponds to a second wireless protocol*** of that frequency band. Ex. 1003, ¶¶121-22.

6. Claim 7

Suzuki discloses predistorters for a multi-band wireless system operating on different frequency bands, which can, for example, "transmit[] both signals in 800 MHz band ***and*** in 1.5 GHz simultaneously." Ex. 1004, ¶7. A POSITA would therefore understand that the same information is being transmitted across two different frequencies. Ex. 1003, ¶123. At a minimum, a POSITA would have found it obvious to transmit the same data across Suzuki's multiple frequencies. For example, a POSITA would be faced with limited design choices for data to be transmitted using Suzuki's system—indeed, just two choices: either send the same data on the two frequencies or send different data. Ex. 1003, ¶124. Sending the same data would also have the well-known benefit of providing redundancy, especially in environments involving low signal-to-noise ratios. *Id*.

7. Claim 8

Suzuki discloses that ***first and second information*** come from the ***same input data stream*** S_T. Ex. 1004, ¶¶43-45; *compare* Fig. 1 (showing single input data stream ST), *with* Fig. 6 (showing two input data streams, S_{T1} and S_{T2}, combined into S_T); Ex. 1003, ¶125.

8. Claim 10

Claim 10 differs from Claim 1 in that it recites a method using various well-known components for generating Claim 1's transmissions. Claim 10 requires receiving two digital signals and processing them using DACs, up-converters, a combiner, an amplifier, and a transmitter to generate and transmit a signal as described in Claim 1—a multi-carrier signal. There is nothing novel about the use of these components in the claimed sequence to transmit data. Ex. 1003, ¶¶126-27. Indeed, even the '802 patent acknowledges these were well-known, prior art components for transmitting data in communications systems. Ex. 1001, Fig. 1, 1:12-32.

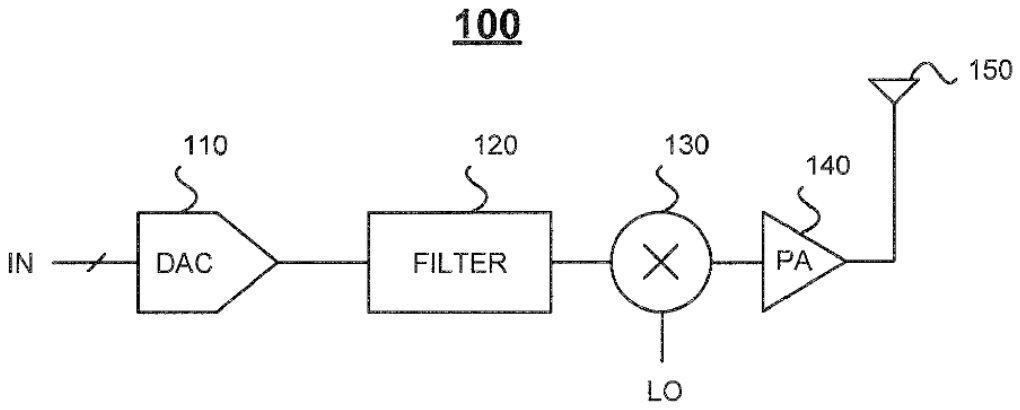

Fig. 1
(prior art)

Thus, it is unsurprising Suzuki and other references disclose or at least render obvious claim 10. Ex. 1003, ¶128. Petitioners also rely on two alternative theories for this claim, that Suzuki's embodiments in Figures 6 and 8 render this claim obvious.

(a) 10pre

See 1pre. Ex. 1003, ¶129.

(b) 10a/10b

"receiving a [first/second] digital signal comprising [first/second] data to be transmitted": In Figure 6, ***first and second digital signals*** are outputted from the predistortion lookup tables. Ex. 1003, ¶¶130-31. Specifically, "input signal ST including dual frequency bands of transmitting signals is divided into two input side variable band signal extractors 11-1 and 11-2 at the divider 10 and transmitting

signals in dual frequency bands are extracted." Ex. 1004, ¶45. The difference between the extracted symbols and monitor signals from SM is calculated, and used to receive predistortion compensation data from lookup tables 17-1 and 17-2, which are the ***first and second digital signal***, respectively. Ex. 1004, ¶46. Suzuki discloses these are digital signals because "tables 17-1 and 17-2 are implemented through digital signal processing." *Id.*, ¶63. The predistortion compensation data ***will be transmitted*** with their respective frequency band as a predistorted signal. Ex. 1003, ¶131.

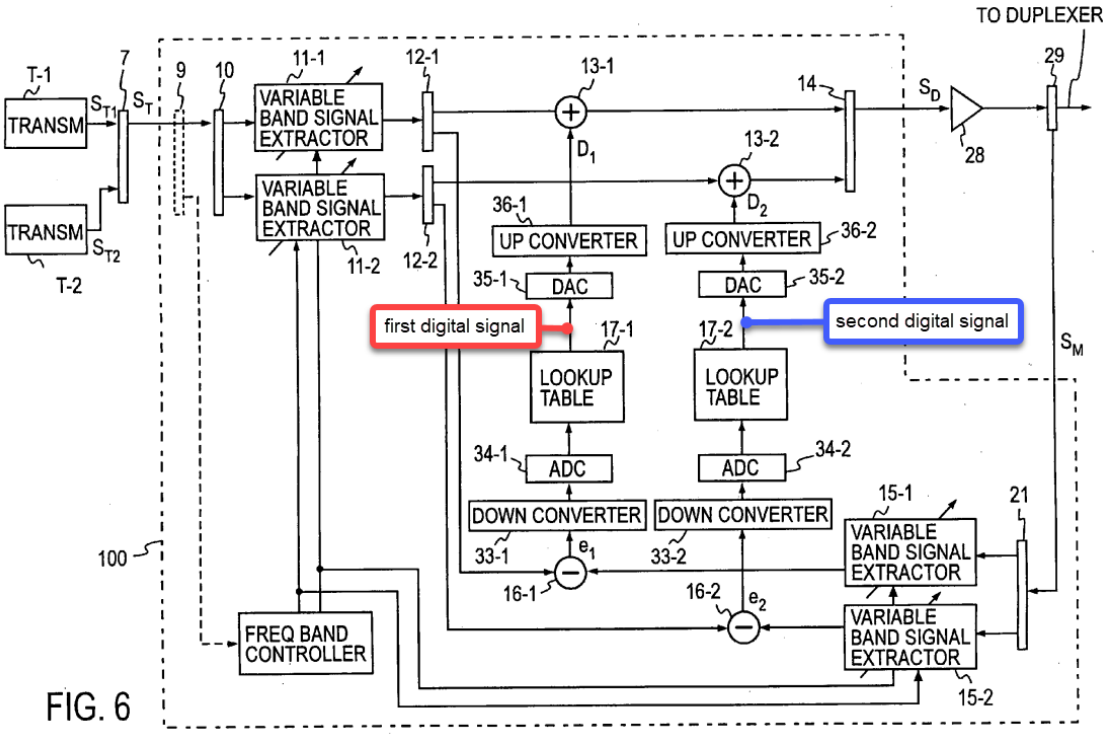

FIG. 6

In the alternative, Suzuki discloses in Figure 8 that SD1 and SD2 are the ***first*** and ***second digital signal***, respectively. Ex. 1003, ¶132. Suzuki states the extracted signals from the input signal are added (at adders 13-1 and 13-2) to predistortion

compensation data from lookup tables 17-1 and 17-2, and are combined at combiner 14 to generate digital signals SD1 and SD2 (which are received by DACs 24-1 and 24- 2). *Id*., ¶48. These signals ***will be transmitted*** by an antenna. *Id*., ¶58.

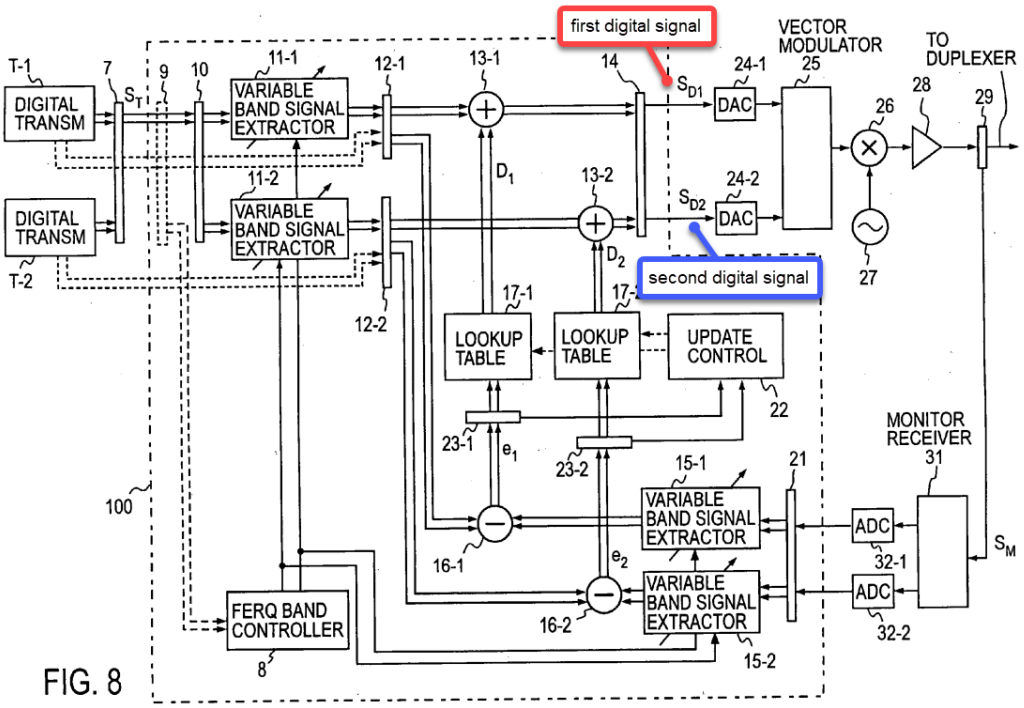

FIG. 8

(c) 10c/10d

"converting the [first/second] digital signal into a [first/second] analog signal using a [first/second] digital-to-analog converter": Suzuki discloses in Figure 6 that "distortion compensation data D1 and D2 read out from the lookup tables 17-1 and 17-2 are converted into analog signals at the DACs 35-1 and 35-2," which are the ***first*** and ***second DAC***, respectively. Ex. 1004, ¶63; Ex. 1003, ¶¶133-34.

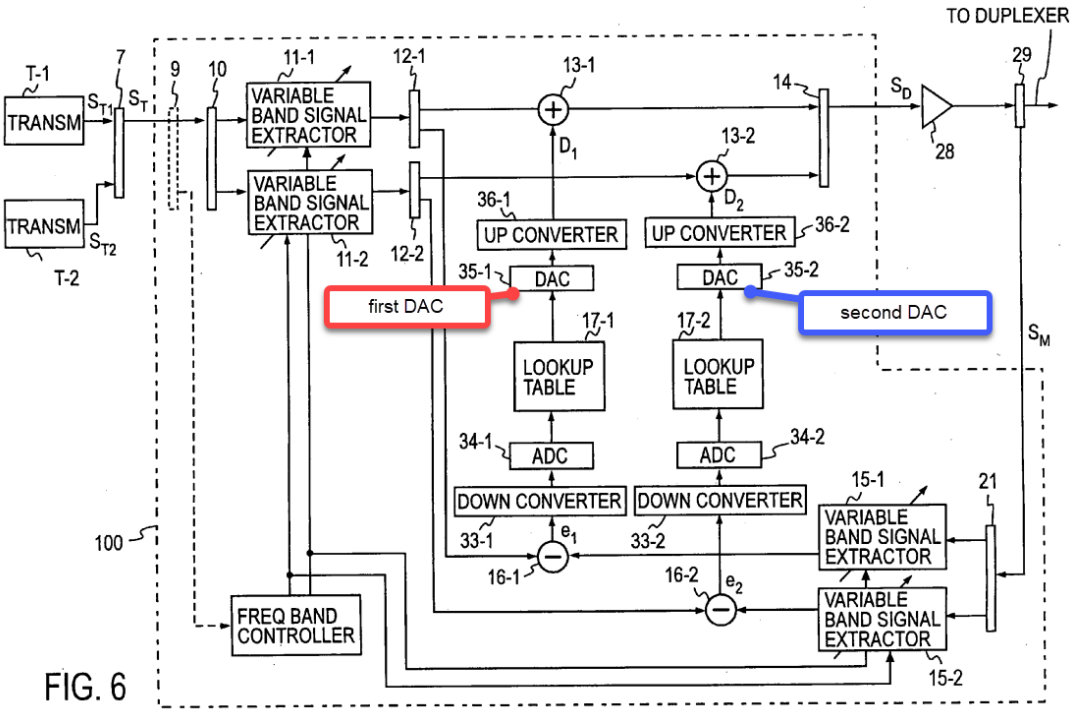

FIG. 6

Suzuki also discloses in Figure 8 that digital signals S_{D1} and S_{D2} are "converted into analog signals at the digital-analog-converter (DACs) 24-1 and 24-2." Ex. 1004, ¶58. DACs 24-1 and 24-2 are the ***first and second DACs***, respectively. Ex. 1003, ¶135.

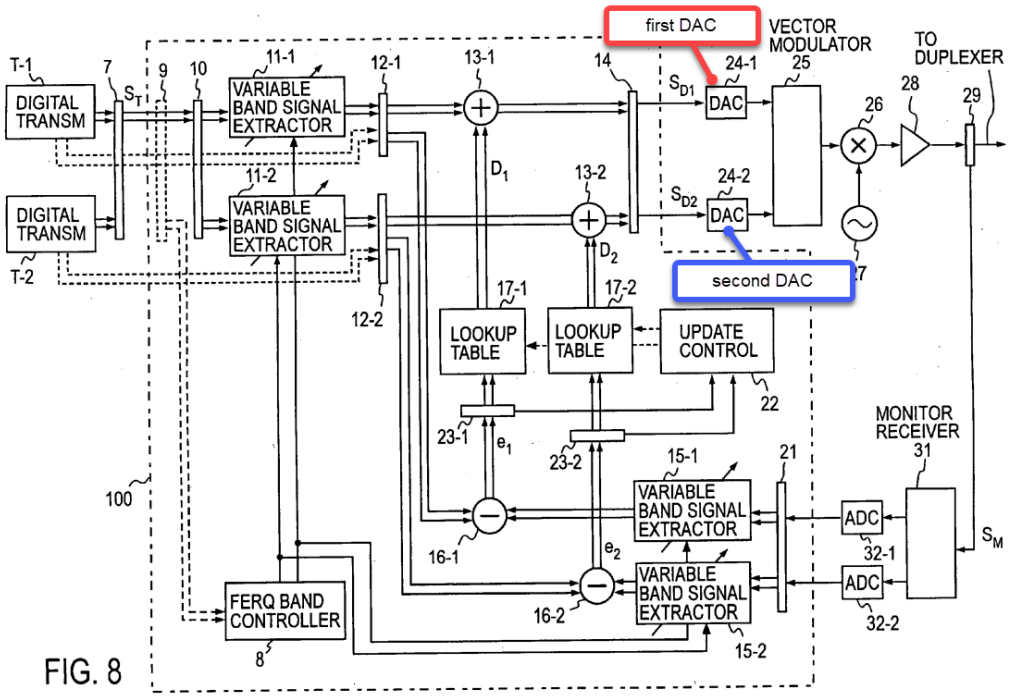

FIG. 8

"[first/second] analog signal carrying the [first/second] data across a [first/second] frequency range": In both Figures 6 and 8, the ***first and second predistorted analog signals*** are upconverted, combined, and amplified, leading to the predistorter's output signal. Ex. 1003, ¶136. As discussed above for claims 1a and 1b, Suzuki's predistorter carries each predistorted signal across one of the frequency bands of the output signal (***first and second frequency ranges***), such as depicted in Figure 13A as first frequency range (f1L to f1H, red line) and second frequency range (f2L to f2H, blue line) centered at f1 and f2. A POSITA would understand the upconversion process will convert the analog signal frequency range to a new center frequency. *Id.* Thus, a POSITA would understand the first and second

analog signals carry data across first and second frequency ranges, which are upconverted to the first and second RF frequency centers f1 and f2.

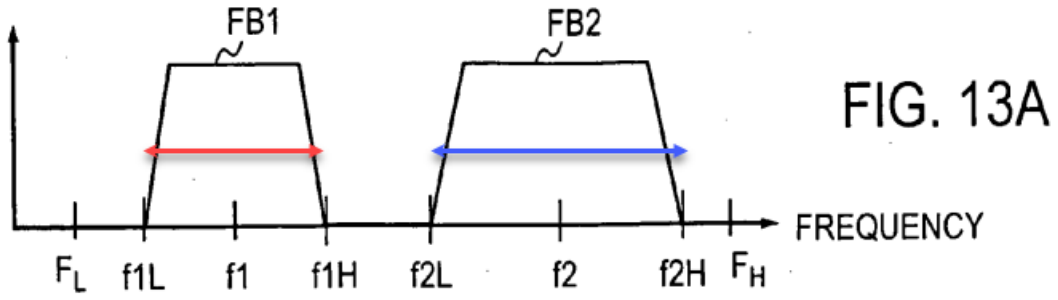

(d) 10e/10f

"up-converting the [first/second] analog signal to a [first/second] RF center frequency": In Figure 6, signals from DACs 35-1 and 35-2 are "converted into high frequency signals at the ***up-converters*** 36-1 and 36-2." Ex. 1004, ¶63. These signals are "provided to the adders 13-1 and 13-2," combined in "combiner 14" and amplified at "power amplifier 28" to generate a transmission over the frequency bands depicted in Figure 13A. *Id.* Because there are no other frequency conversions, a POSITA would understand up-converters 36-1 and 36-2 up-convert the DAC signals to the RF bands used in the transmission signal depicted in Figure 13A, *i.e.* ***first and second RF center frequencies***. Ex. 1003, ¶¶137-38.

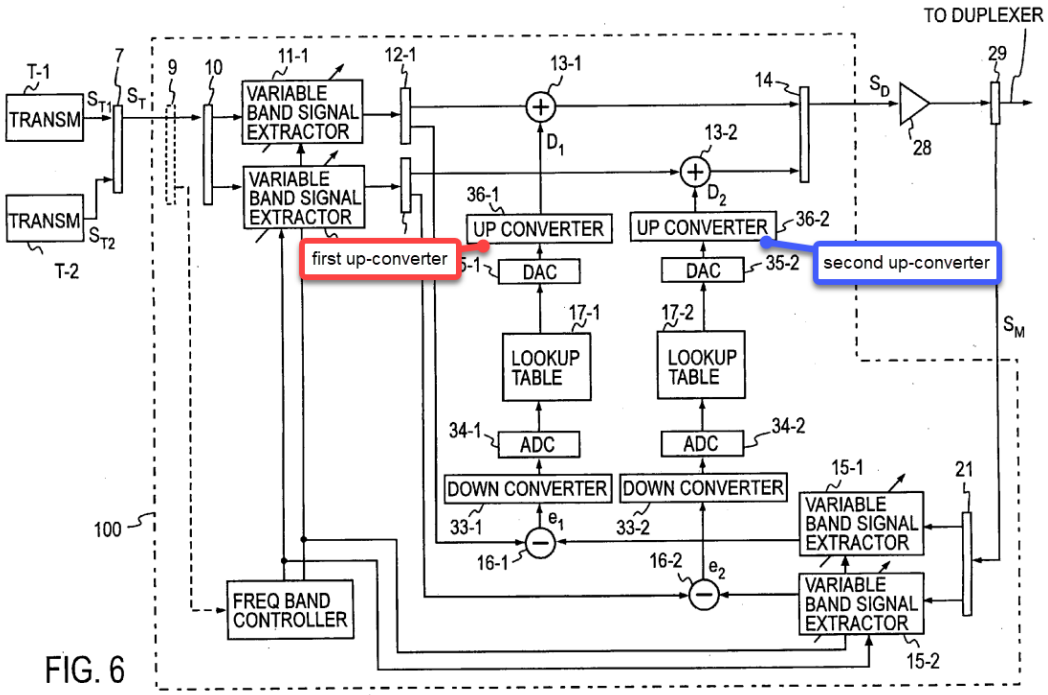

FIG. 6

In Figure 8, the analog signals are sent to a "frequency-converter 26" which are "frequency-converted into a transmission signal of a radio frequency band by a carrier signal." Ex. 1004, ¶58. A POSITA would understand a frequency-converter is an up-converter, because an up-converter converts signals to a higher frequency center for transmission over a radio band. Ex. 1003, ¶139. Thus, a POSITA would understand Suzuki discloses that frequency-converter 26 up-converts analog signals to the frequency band centers used in the transmission signal, which are depicted as f1 and f2 in Figure 13A.

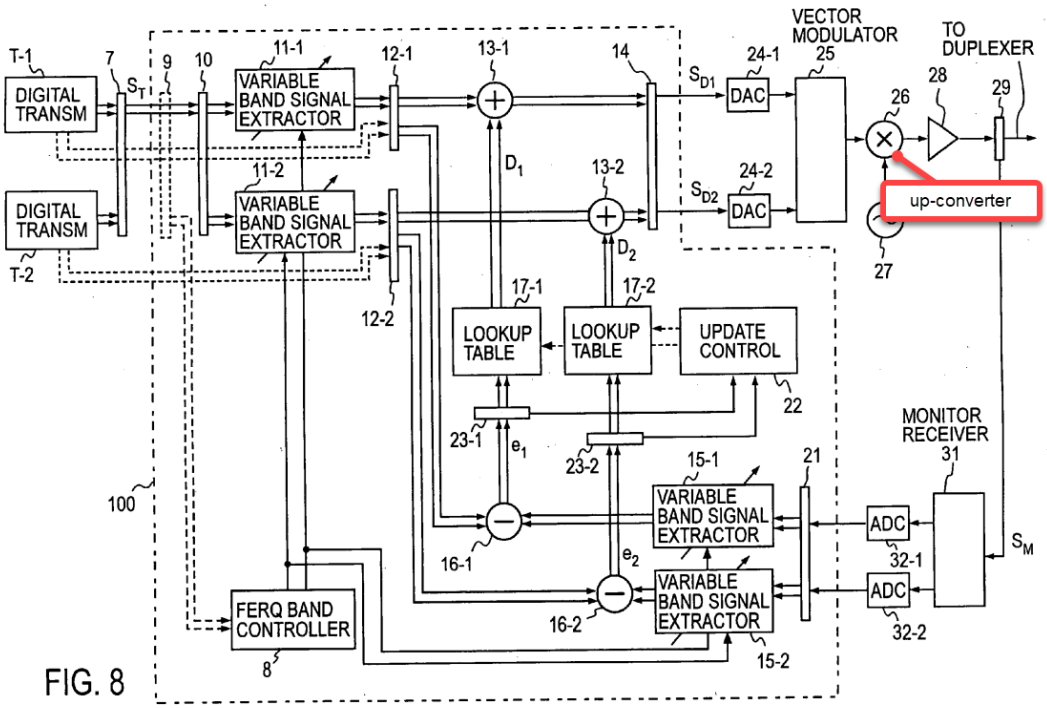

FIG. 8

To the extent Patent Owner argues frequency-converter 26 is not an up-converter, a POSITA would have found it obvious to use a down-converter after the variable band signal extractors 11-1 and 11-2 to down-convert the signals to baseband frequency (a lower frequency spectrum), and then use an up-converter after DACs 24-1 and 24-2 to return the signal to the desired high frequency bands for transmission, such as described in Figure 6. Ex. 1003, ¶140. A POSITA would been motivated to modify Figure 8 in view of Figure 6 because a POSITA would understand operating on signals at baseband frequency, including for predistortion, is more efficient and has better performance than at higher frequencies. *Id.* This is because baseband frequencies are less subject to noise and interference. *Id.* Baseband frequencies, which operate close to a 0 Hz center and have higher power,

are also preferable for digital signal processing, which is used in Figure 8 (hence the need for a DAC). *Id*. A POSITA would have reasonably expected this modification to succeed because the use of such converters was well-known, conventional, and well within the capabilities of a POSITA. *Id*.

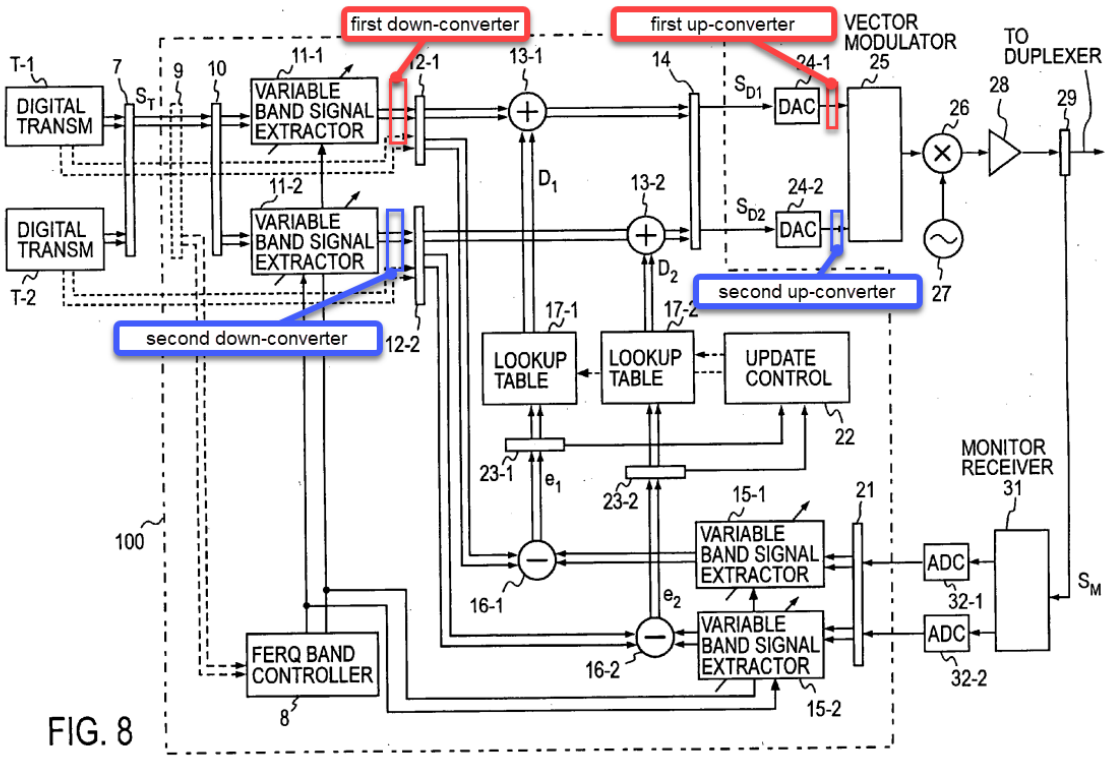

FIG. 8

Moreover, such converters were conventional, frequently-used components of wireless communication systems, such that POSITAs would have reasonably expected these modifications to succeed. Ex. 1003, ¶141; Ex. 1007, ¶62 (components that perform "frequency up-conversion … are commonly employed in RF transmitters"). Indeed, as explained above, even the '802 patent acknowledged

it was known to use up-converters to up-convert baseband analog signals to a higher carrier frequency for transmission. Ex. 1001, Fig. 1, 1:12-32.

"[first/second] up-converted frequency range from the [first/second] RF center frequency minus one-half the [first/second] frequency range to the [first/second] RF center frequency plus one-half the [first/second] frequency range": As discussed above for claims 10c and 10d (and claims 1a and 1b), Suzuki's transmission signal uses multiple frequency bands as depicted in Figure 13A. Ex. 1003, ¶142. In Figure 13A, ***first frequency ran***ge FB1 has ***center frequency*** f1, with upper limit f1H and lower limit f1L. Ex. 1004, ¶79. Similarly, ***second frequency*** range FB2 has ***center frequency*** f2, with upper limit f2H and lower limit f2L. *Id*. Because "[t]he center frequency of each frequency band is obtained by f1=(f1L+f1H)/2 and f2=(f2L+f2H)/2," the center frequencies for both ranges is the center frequency plus and minus one-half of the range, as claimed.

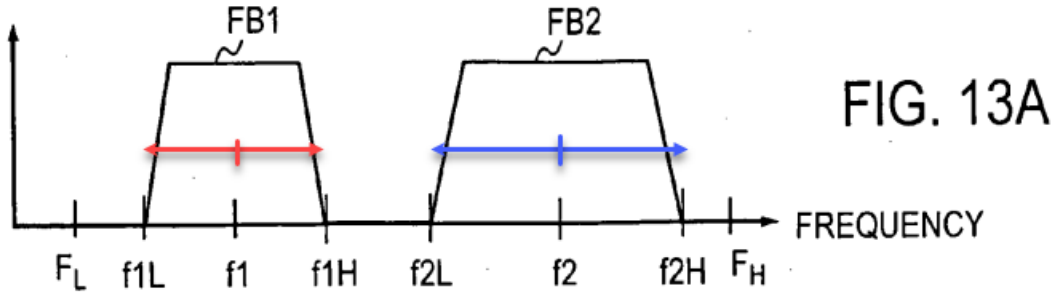

FIG. 13A

"wherein a frequency difference between the first RF center frequency and the second RF center frequency is greater than the sum of one-half the first

frequency range and one-half the second frequency range": *See* Claim 2. Ex. 1003, ¶143.

(e) 10g

"combining the first up-converted analog signal and the second up-converted analog signal to produce a combined up-converted signal": For Figure 6, Suzuki discloses the up-converted analog signals from up-converters 36-1 and 36-2 are added to transmitting signal ST "at the adders 13-1 and 13-2" and "are combined with each other at the combiner 14." Ex. 1004, ¶48; Ex. 1003, ¶¶144-45.

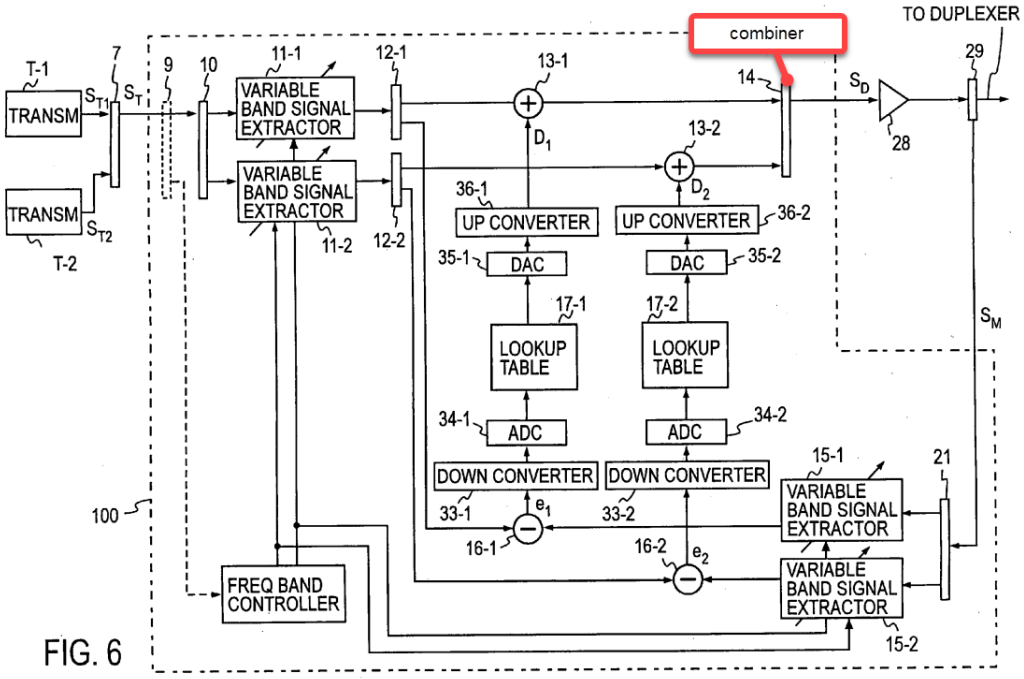

FIG. 6

For Figure 8, the signals are combined at vector modulator 25. Ex. 1004, ¶58. It would have been obvious to a POSITA to modify Figure 8 to combine the signals after up-conversion, as claimed. Ex. 1003, ¶146. Whether to combine signals before or after up-conversion makes no difference and each is merely one of two discrete

choices that had predictable results. As Dr. Almeroth explains, it is preferable to combine after up-conversion, as that would allow greater flexibility in choosing which frequency band to use for each signal. *Id*.

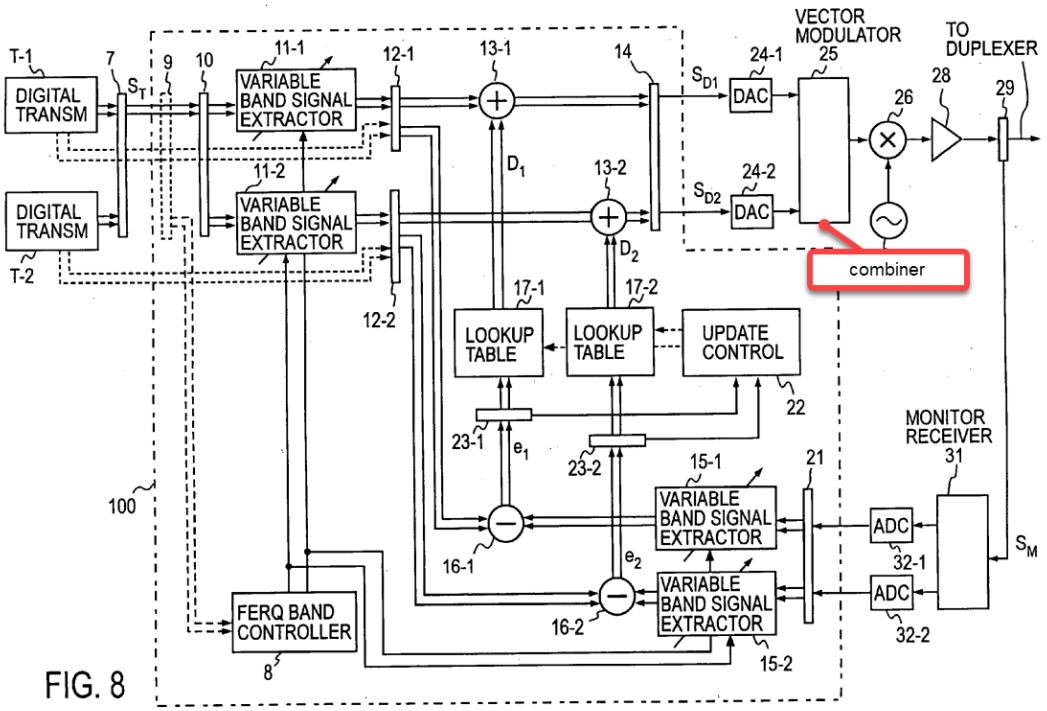

FIG. 8

(f) 10h

"amplifying the combined up-converted signal in a power amplifier resulting in an amplified combined up-converted signal": For both Figures 6 and 8, Suzuki teaches "an output from the predistorter 100 is ***power amplified at the power amplifier 28***." Ex. 1004, ¶63; ¶70 (Fig. 8). Indeed, the very purpose of Suzuki's predistorters is to compensate for predistortion caused by power amplification. *Id*., ¶1. A POSITA would understand the output of the amplifier is an ***amplified combined up-converted signal***. Ex. 1003, ¶147

Below is the amplifier in Figures 6 and 8. *Id.*, ¶¶148-149.

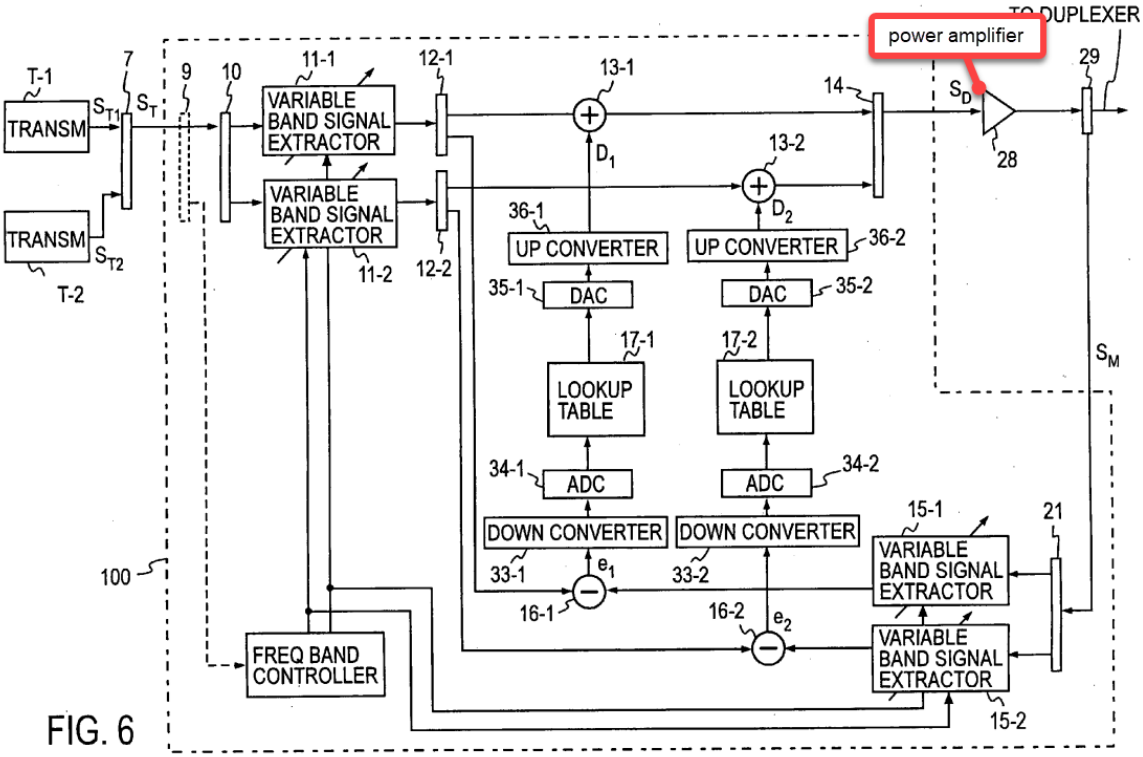

FIG. 6

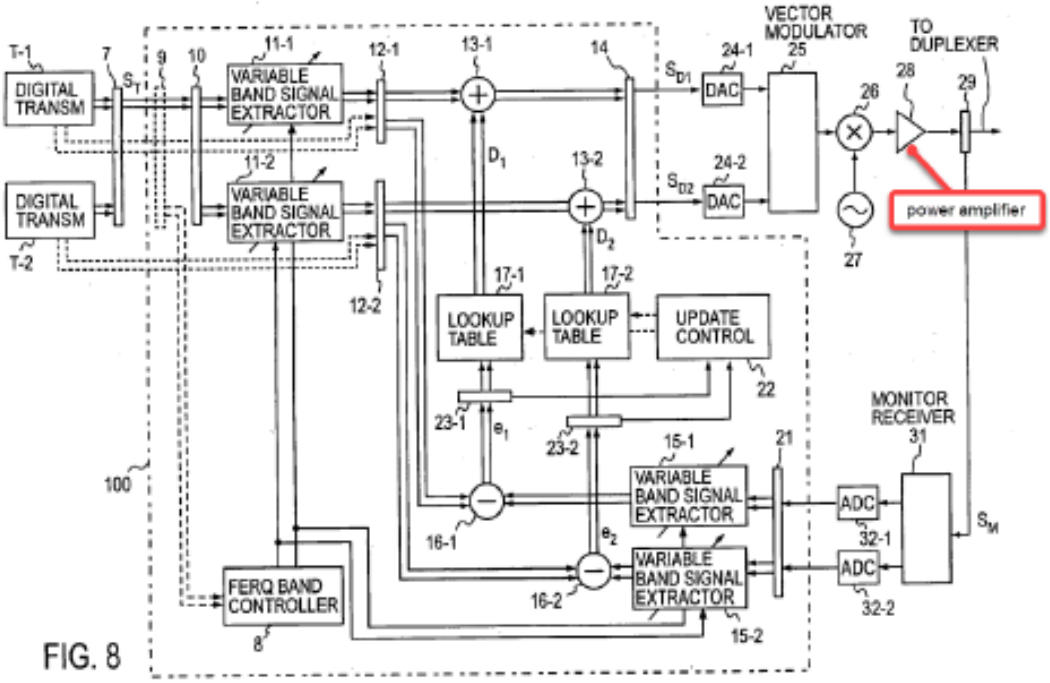

FIG. 8

(g) 10i

"transmitting the amplified combined up-converted signal on a first antenna": Suzuki teaches that, for both Figures 6 and 8, "the power amplified output is provided to … ***an antenna (not shown)***." *Id*., ¶63. Suzuki describes a "transmitting signal," and a POSITA would understand that providing the signal to an antenna means it will be ***transmitted by the antenna***. *Id*., ¶59; Ex. 1003, ¶150.

(h) 10j

See Claim 4. Ex. 1003, ¶151.

9. Claims 13, 17, 21

Claims 13, 17, and 21 mirror the above claims as set forth in the following chart. Suzuki renders these claims obvious for the same reasons as above. Ex. 1003, ¶¶152-60.

Claim Limitation	Corresponding Claim Limitation(s)
13	6
17pre	10pre
17a	10a. Suzuki further discloses a ***baseband digital system***. Ex. 1004, ¶63 (explaining that the individual signals of S_M (and therefore S_T) "are converted from high frequency signals to base band signals"); ¶93 (describing ST as a "base band transmitting signal").
17b	10c
17c	10d

17d	10e
17e	10f
17f	10h
21	6

10. Claim 22[2]

See claims 7 and 8 (***the second data corresponds to the first data)***[3] ***and claim 10g (outputting a third up-converted signal comprising the first and second up-converted analog signals***). Ex. 1003, ¶¶161-62.

A POSITA would understand the ***power amplifier*** outputs a third up-converted signal comprising the first and second up-converted signals or at least could perform the step of combining the first and second up-converted analog signals disclosed in Suzuki, thereby producing a third up-converted signal comprising the up-converted first and second analog signals. Ex. 1003, ¶163. For example, Figure 6 shows first and second up-converted signals being combined (via combiner 14)

[2] While not asserted by PO, Petitioners challenge this claim because it is a combination of other limitations discussed above

[3] To the extent "corresponds to" is understandable and means that the first and second data are the same data, then see claim 7; otherwise, if it means they are from the same data stream, then see claim 8. *Id.*

and provided to power amplifier 28, which outputs a third up-converted signal that comprises the first and second signals. Figure 13A depicts the combined analog signals. *Id*.

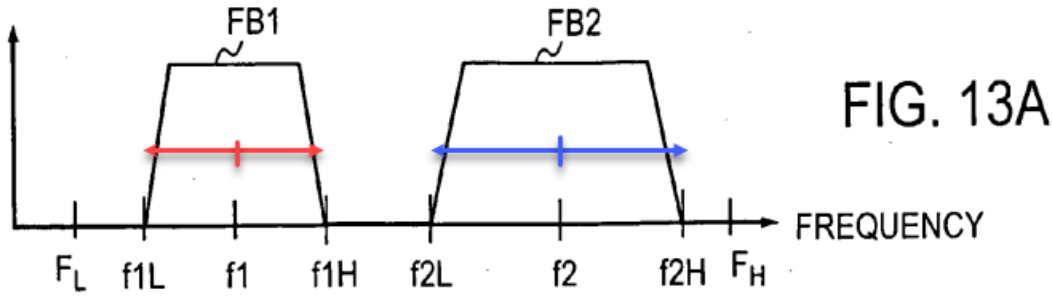

FIG. 13A

C. <u>Ground 3:</u> Claims 7-9, 22, and 23 are obvious over Suzuki and Jalali

Jalali is a Qualcomm patent directed to multi-band transmissions in an OFDM communications system. Ex. 1008, Abstract, 1:24-28. Jalali contains several teachings that would have been obvious to incorporate into Suzuki: claim 9 and 23's disclosure of time-division in an OFDM signal and claim 7, 8, and 22's disclosure of using the same data or data stream. Ex. 1003, ¶164.

Claims 9 and 23 recite that the first and second information are transmitted as OFDM symbols. OFDM (Orthogonal Frequency Division Multiplexing) was well known, as was its use of a time-division of OFDM, as set forth in claims 9 and 23. Ex. 1003, ¶165. Jalali describes one such method for time-dividing an OFDM signal, and it would have been obvious to modify Suzuki to include Jalali's teachings. The combination also renders obvious claims 7, 8, and 22, because transmitting a multi-

carrier signal where both carriers carry the same data or are from the data stream was well-known. *Id.*

1. Motivation to Combine

A POSITA would have been motivated to incorporate Jalali's teaching of a specific signal modulation, i.e., time-division multiplexing on top of OFDM, into Suzuki's wireless transmitter. Indeed, Suzuki discloses the use of FDM in its GSM transmission, but is agnostic as to which specific FDM to use.

OFDM is a well-known, decades-old type of FDM technique and was known to allow more efficient use of the frequency spectrum. Ex. 1003, ¶165; Ex. 1020. OFDM modulates data on multiple carrier frequencies, and Jalali teaches a version that further uses ***time-division multiplexing*** for each frequency band. Ex. 1003, ¶167.

Suzuki teaches simultaneously transmitting two or more signals across different frequencies, known as a multi-carrier signal. *Id.*

Suzuki discloses compatibility with GSM, which was ***defined*** to be a TDMA/FDMA system, was thus readily applicable for Jalali's OFDM with TDM, which is a known improvement on both TDMA/FDMA and OFDM alone. Ex. 1004, ¶4 (identifying GSM); Ex. 1024, 9:59 ("GSM is a TDMA/FDMA system").

Well before the '802 patent it was well known that OFDM with TDM was an improvement over GSM's TDMA/FDMA systems. This was recognized by the

3GPP when it chose OFDMA, which uses OFDM with TDM, for LTE in the mid-2000s. Ex. 1026, 6 (recognizing OFDMA chosen for LTE because "well-known" and allows "efficient use of available bandwidth"); Ex. 1003, ¶165.

A POSITA would have been motivated to incorporate Jalali's OFDM with TDM because of the well-known benefits of using it. Ex. 1003, ¶168. As Jalali explains, "frequency diversity," such as taught in Suzuki, "can be achieved by employing a multi-carrier modulation scheme," and "[o]ne such scheme that has ***numerous advantages*** is OFDM." Ex. 1008, 8:49-50. As Jalali describes, "[w]ith OFDM modulation, the overall transmission channel is essentially divided into a number of (L) parallel sub-channels that are used to transmit the same or different data. The overall transmission channel occupies the total operating bandwidth of W, and each of the sub-channels occupies a sub-band having a bandwidth of W/L and centered at a different center frequency." *Id*., 8:50-56. This description of an OFDM signal matches that of the signal output by Suzuki as depicted in Suzuki's Figure 13A.

Jalali also explains that by using OFDM, "[e]ach of the sub-channels may also be considered an independent data transmission channel that may be associated with a particular (and possibly unique) processing, coding, and modulation scheme," which a POSITA would understand provides flexibility in the transmission. *Id*., 8:58-62; Ex. 1003, ¶169.

Jalali also explains the well-known benefits of its specific protocol of using time-diversity multiplexing with OFDM. *Id*., ¶170. By using TDM, "data transmission occurs over time slots that may be selected to provide immunity to time dependent degradation in the communications link." Ex. 1008, 9:13-16. This "improves the likelihood of correct data reception due to, for example, impulse noise and interference." *Id*., 9:23-26.

Using OFDM with TDM "allows the communications system of the invention to provide robust performance," because "frequency" and "temporal diversity improves the likelihood of correct reception of at least some of the transmitted data, which may then be used … to correct for some errors that may have occurred in the other transmissions." *Id*., 9:27-33. Such diversity "also allows the communications system to concurrently accommodate different types of services having disparate data rate, processing delay, and quality of service requirements." *Id*., 9:34-38. Moreover, OFDM with TDM "provide[s] the most flexibility" and "high performance and efficiency." *Id*., 15:26-28. It also allows for different modulation schemes at different sub-channels and time slots, which "results in the best use of the resource at that particular time, frequency, and space." *Id*., 15:36-42; Ex. 1003, ¶171.

Given these numerous well-known benefits from using OFDM with TDM, a POSITA would have been motivated to incorporate Jalali's OFDM-TDM teachings

into Suzuki. Ex. 1003, ¶172. Indeed, Suzuki states its system is applicable to GSM, and it was known that GSM already combined TDMA and FDMA. Ex. 1004, ¶4 (identifying GSM); Ex. 1024, 9:59 ("GSM is a TDMA/FDMA system"). This provides further motivation for a POSITA to look to Jalali.

A POSITA would have reasonably expected this combination to succeed. OFDM with TDM had long been known in the field and a POSITA would have been familiar with its implementation, including as described by Jalali. Implementing OFDM with TDM into Suzuki would have been well within the capabilities of a POSITA, especially because Suzuki already discloses the use of GSM, which was known to already implement TDMA and FDMA. A POSITA would therefore understand Suzuki was compatible and readily applicable for OFDM with TDM. Ex. 1003, ¶173.

Finally, Suzuki, Jalali, and the '802 patent are analogous art because all three are directed to the same field of multi-carrier transmissions, that is, simultaneously transmitting multiple sets of information using different frequency bands. Ex. 1001, Abstract; Ex. 1004, ¶1; Ex. 1008, 1:25-28; Ex. 1003, ¶174.

2. Claims 7, 8, and 22

Suzuki in view of Jalali render obvious claims 7, 8 and 22, which recite the first and second information are the same data, come from the same data stream, or correspond with each other. Ex. 1003, ¶175. Jalali states with OFDM, "the overall

transmission channel is essentially divided into a number of (L) parallel sub-channels that are used to transmit the ***same or different data***." Ex. 1008, 8:50-53, 9:1-4 ("same data being transmitted on both sub-channels"). In the Suzuki-Jalali combination, Suzuki would likewise transmit information that is the same data or from the same data stream or correspond with each other, on different frequency bands. Ex. 1003, ¶¶175-77.

3. Claims 9 and 23

As discussed above, a POSITA would have found it obvious to implement Jalali's time-divided OFDM methods with Suzuki's multi-carrier transmissions. Ex. 1003, ¶178.

"first information and second information comprise a plurality of OFDM symbols": Jalali teaches that Figure 2 depicts a transmission of 16 sub-channels (along the frequency axis) that "is used to transmit a sequence of ***OFDM symbols***" across time slots. Ex. 1008, 13:55-56. For example, "data 5" and "data 6" in Figure 2 are ***first and second information comprising a plurality of OFDM symbols***. Ex. 1003, ¶179.

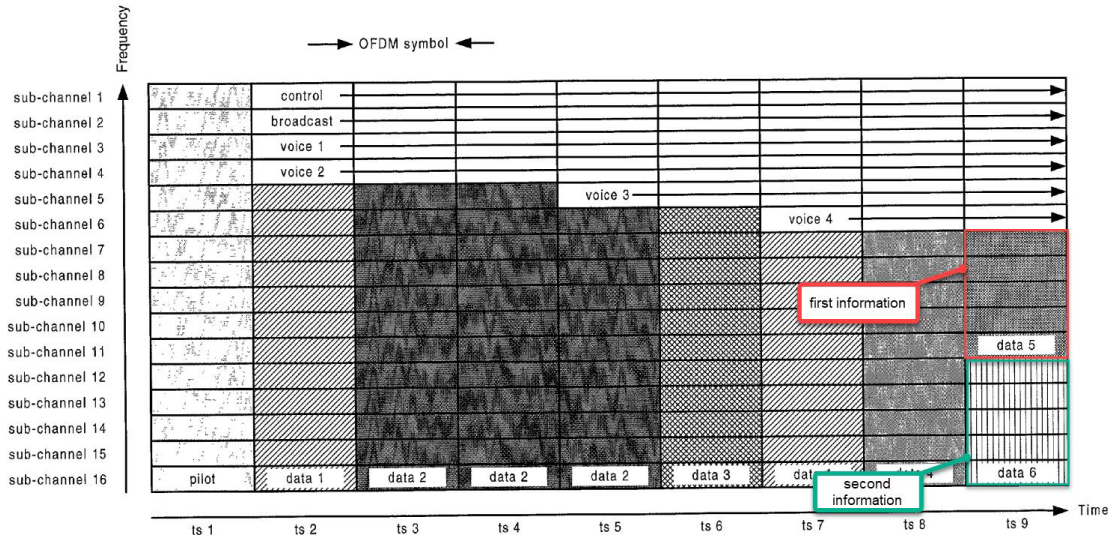

FIG. 2

These OFDM symbols are "used to transmit signaling, voice, traffic data, and others." *Id*., 13:64-65. Jalali also teaches "each sub-channel at each time slot … may be viewed as an independent unit of transmission (i.e., a modulation [or OFDM] symbol) that can be used to transmit any type of data." *Id*., 15:28-31; Ex. 1003, ¶180.

"a first symbol is transmitted during a first time slot across the first frequency range and a second symbol is transmitted during the first time slot across the second frequency range": Jalali discloses that in Figure 2, one of the OFDM symbols for data 5 (***first symbol***) uses sub-channel 11 (***first frequency range***) in time-slot 9 (***first time slot***), and one of the OFDM symbols for data 6 (second symbol) uses sub-channel 12 (***second frequency range***) in the same time-slot. Ex. 1003, ¶181.

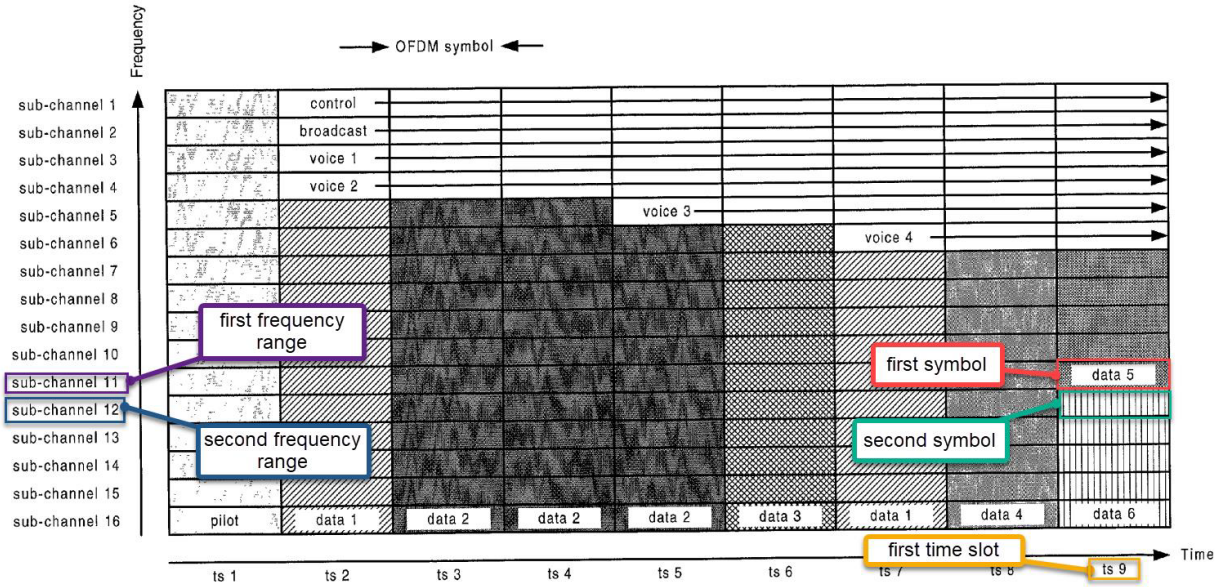

FIG. 2

As can be seen in Figure 2, the sub-channels are on the frequency y-axis and thus each covers a different frequency range. Ex. 1003, ¶182. Jalali further discloses that, along the x-axis, "data transmission is partitioned into time slots, with each time slot having the duration of, for example, the length of one modulation symbol." Ex. 1008, 15:59-62. Jalali further teaches "a particular data transmission … may occur over multiple sub-channels and/or multiple time slots, and multiple data transmissions … may occur at one time slot," meaning data may cover multiple frequency ranges and/or time slots. *Id*., 16:42-45. Accordingly, OFDM symbols for a given time slot are transmitted simultaneously because they share a time slot and are transmitted on different frequency bands as indicated by the sub-channels. Ex. 1003, ¶182.

As discussed above, in Suzuki-Jalali, Jalali's sub-channel frequency range corresponds with the frequency ranges in Suzuki's Figure 13A. Ex. 1003, ¶183.

"a third symbol is transmitted during a second time slot across the first frequency range and a fourth symbol is transmitted during the second time slot across a second frequency range": Jalali teaches a data transmission "may occur over … multiple time slots," such as "data 2" in Figure 2, which occurs over time slots 3, 4, and 5. Ex. 1008, 16:42-43. While Figure 2 does not depict that data 5 and data 6 occur over multiple time slots, a POSITA would have understood from Jalali's teachings that data 5 and data 6 could continue using the same sub-channels in a subsequent time slot, such as time slot 10 as depicted in the below revised Figure 2. Ex. 1003, ¶184. In the revised Figure 2, one of the OFDM symbols for data 5 (***third symbol***) uses sub-channel 11 (***first frequency range***) in time-slot 10 (***second time slot***), and one of the OFDM symbols for data 6 (***fourth symbol***) uses sub-channel 12 (***second frequency range***) in the same time-slot. *Id.*

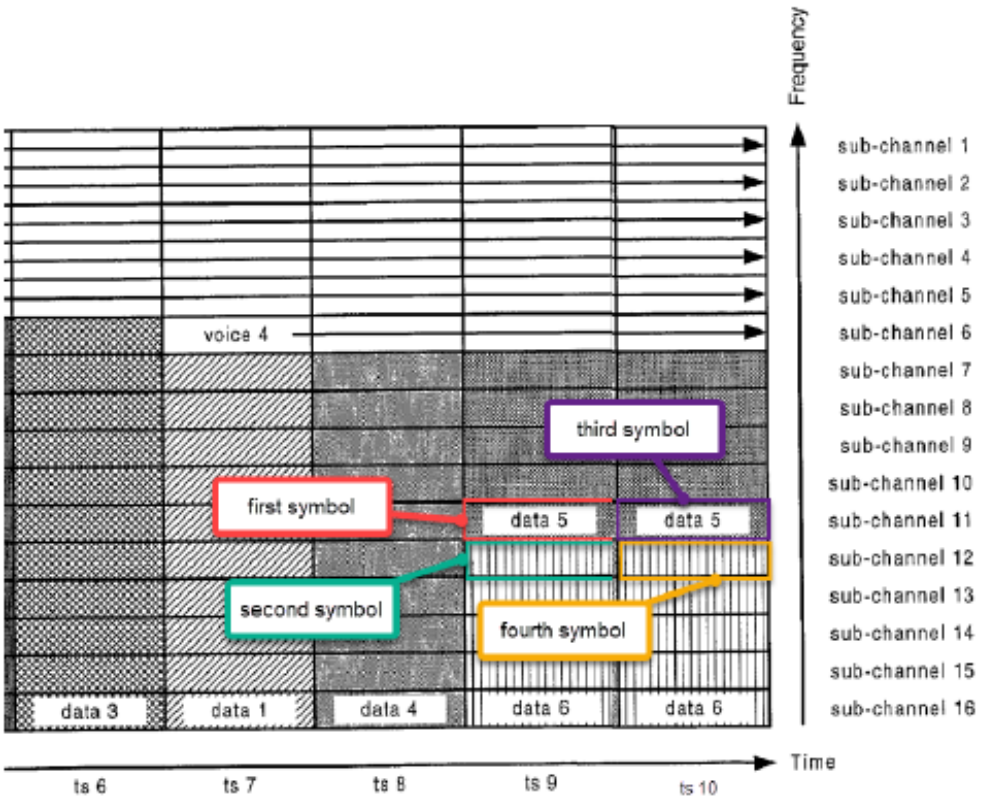

FIG. 2

A POSITA would understand if data ” and’data 6 was as large as data 2, it would be necessary to transmit both data across multiple timeslots. Ex. 1003, ¶185. Indeed, Jalali teaches the purpose of TDM (time division modulation) is that it “allows for greater flexibility in the transmission of voice data and traffic data, and ***various assignments of resources can be contemplated***,” including having data 5 and data 6 as depicted in time slot 9 be further transmitted across multiple time slots. *Id*., 15:63-65.

D. <u>Ground 4:</u> Claims 14 and 24-25 are obvious over Suzuki and Chen

Independent Claims 1, 10, and 17 are directed to generating and transmitting a multi-carrier signal. By contrast, Claims 14 and 24 are directed to receiving and processing said signal using a conventional low-noise amplifier (claim 14), down-converters (claims 14 and 24), and a filter (claim 24). Chen describes a receiver with such components, and a POSITA would have found it obvious to combine Suzuki's transmitter with Chen's receiver. Ex. 1003, ¶186. For Claim 25[4], see Ground 2, Claim 2. *Id*.

1. Motivation to Combine

There is a natural motivation to combine Suzuki's multi-carrier signal ***transmitter*** with Chen's multi-carrier signal ***receiver***. Ex. 1003, ¶¶187-94.

A POSITA would have been motivated to combine Suzuki and Chen so that Chen's receiver receives the multi-carrier signal from Suzuki's transmitter. Initially, the components of claims 14 and 24 and described in Chen's receiver are well-known, conventional components frequently used for processing received wireless signals. A low noise amplifier is needed to amplify low-power signals, since signal attenuation is common when receiving wireless signals over an antenna. Ex. 1003, ¶188. Down-converters are needed because received signals are up-converted from

[4] While not asserted by PO, Petitioners challenge this claim because it is a combination of other limitations discussed above.

a baseband frequency (the frequency of the original digital signal) to an RF carrier frequency for wireless transmission. *Id*. Down-conversion restores the signal back to the original baseband that, as discussed above, is easier and faster to process and is the original form of the signal. *Id*. Finally, a filter is used to remove noise from the signal to condition it for analog-to-digital conversion. *Id*. These are well-known benefits and features of wireless communications receivers that would have motivated a POSITA to incorporate Chen's receiver into Suzuki.

Moreover, this process of using a low noise amplifier, down-converters, and a filter is common for receiving multi-carrier wireless signals and can be found throughout the literature, not just Chen. Ex. 1003, ¶189. For example, US7,136,430, filed in 2003, explains "on the receiver side, the ***traditional*** down-conversion chain" uses "various combinations of analog filters, amplifiers, mixers and demodulators." Ex. 1010, 1:32-37. It depicts a "prior art analog receiver 600 of the type used in conventional digital communications systems" where digital processing of a received RF signal goes through a low noise amplifier 602, a downconverter 608, and then low pass filters 610. *Id*., 9:49-10:16, Fig. 6.

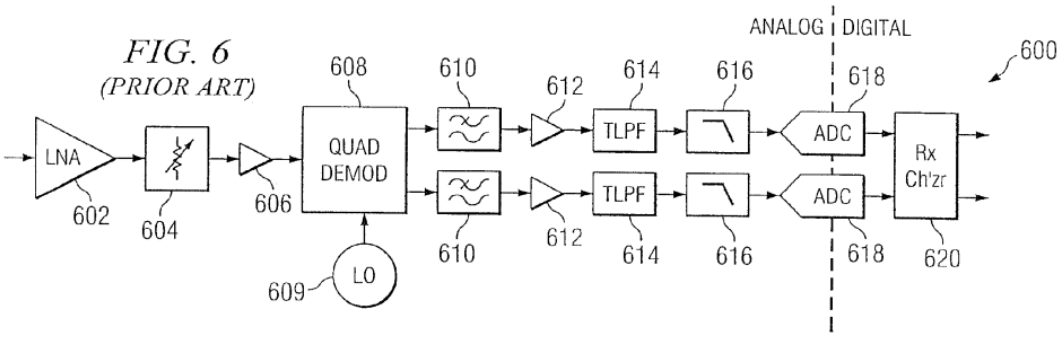

Similarly, US7,460,615, filed in 2005, shows a prior art receiver with "antenna 102 which receives ranging signals in two frequency bands," with each band associated with a "downconverter stage" 106 and 160, respectively, as depicted in Figure 1. Ex. 1011, 5:6-43. Each downconverter stage has a low noise amplifier (114 and 162), a downconverter (120 and 163), and an intermediate frequency band pass filter (128 and 166). *Id.*; Ex. 1003, ¶190.

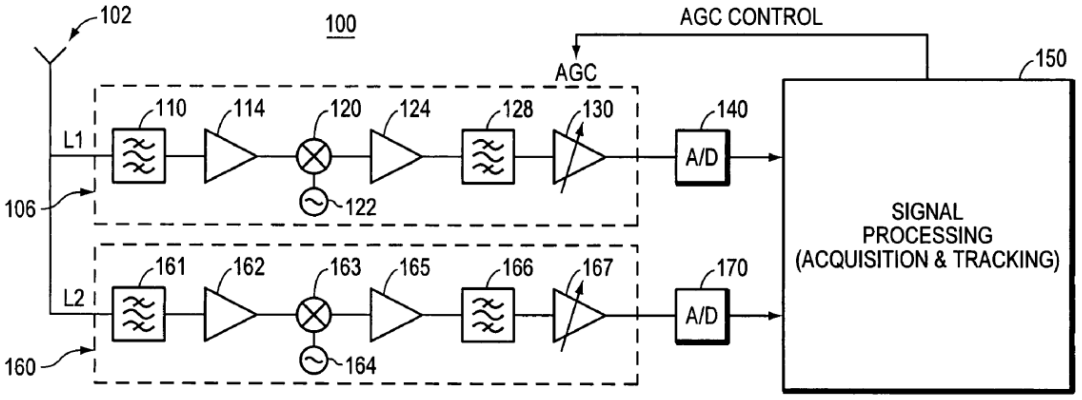

FIG. 1 PRIOR ART

Finally, US7,133,697, filed in 2002, teaches a similar circuit in Figure 5 that receives a signal "from the antenna 14a" and passes it through "an amplifier, such

as an LNA 93, RF-to-IF downconverter … circuitry 94, [and] an IF filter 96." Ex. 1012, 7:35-43; Ex. 1003, ¶191.

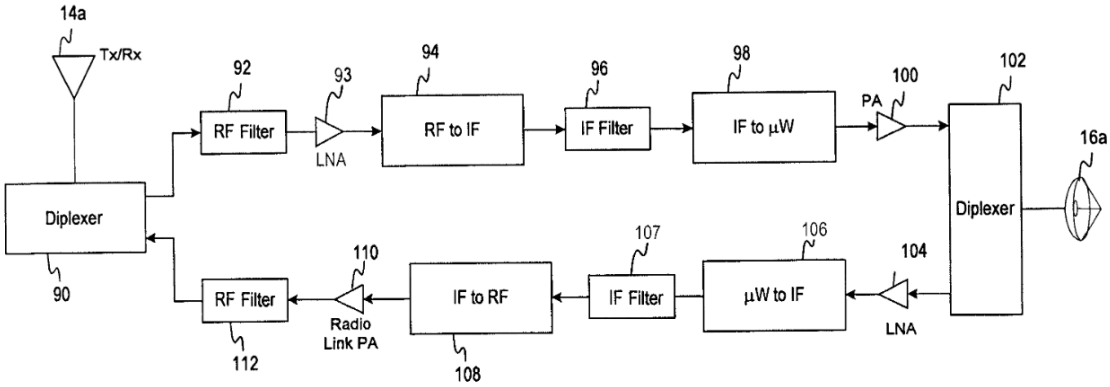

Chen likewise discloses processing received signals using a low noise amplifier, downconverters, and a filter. Thus, the combination of Suzuki and Chen is the use of a well-known technique to improve Suzuki and a combination of prior art elements according to known methods to yield predictable results. Ex. 1003, ¶192.

Indeed, a POSITA would have considered the combination to have a reasonable expectation of succeed and yield predictable results. Suzuki describes a transmitter and Chen describes a corresponding receiver. Ex. 1003, ¶193. A POSITA would have reasonably expected Chen's receiver to receive and process Suzuki's transmissions, as Suzuki is directed to transmitting multi-carrier signals and Chen is directed to receiving them. To a POSITA, the combination would have yielded a predictable result: Chen successfully processing/demodulating Suzuki's transmission. *Id*.

Finally, Suzuki, Chen and the '802 patent are all analogous art. As explained, Suzuki and the '802 patent are directed to multi-carrier transmissions. Chen is too. Ex. 1009, Abstract ("In the present invention, high speed data is provided by transmitting data on multiple carrier frequencies …"); Ex. 1003, ¶194.

2. Claim 14

Claim 14 depends on Claim 10 and adds additional steps. Claim 10 describes generating and ***transmitting*** a signal via one antenna and Claim 14 describes a different antenna ***receiving that signal*** and using well-known components to process it. Ex. 1003, ¶195.

(a) 14pre

See Claim 7. If Patent Owner argues Suzuki does not disclose the second and first data being the same, as discussed above in Ground 2, it would have been an obvious design choice, and as discussed in Ground 3, Jalali discloses "the overall transmission channel is essentially divided into a number of (L) parallel sub-channels that are used to transmit the ***same or different data***." Ex. 1008, 8:50-53, 9:1-4 ("same data being transmitted on both sub-channels"); Ex. 1003, ¶¶196-97. As explained in Ground 3, a POSITA would have found it obvious to incorporate such teachings into Suzuki's transmitter (which is equally applicable to the Suzuki- Chen combination). *Id.*

(b) 14a

In the Suzuki-Chen combination, Chen's receiver receives Suzuki's multi-carrier transmission. Ex. 1003, ¶198. Chen discloses it receives signals on an antenna (***second antenna***), including a multi-carrier signal containing signals on several frequency bands—specifically, "Signals 250a, 250b, 250c and 252a [as depicted in Figure 5] are received at ***antenna 300***." Ex. 1009, 13:61-62. Thus, Chen's antenna is the claimed "***second antenna***" that receives the "transmitted signal" from Suzuki's first antenna (*see* claim 10). Ex. 1003, ¶199.

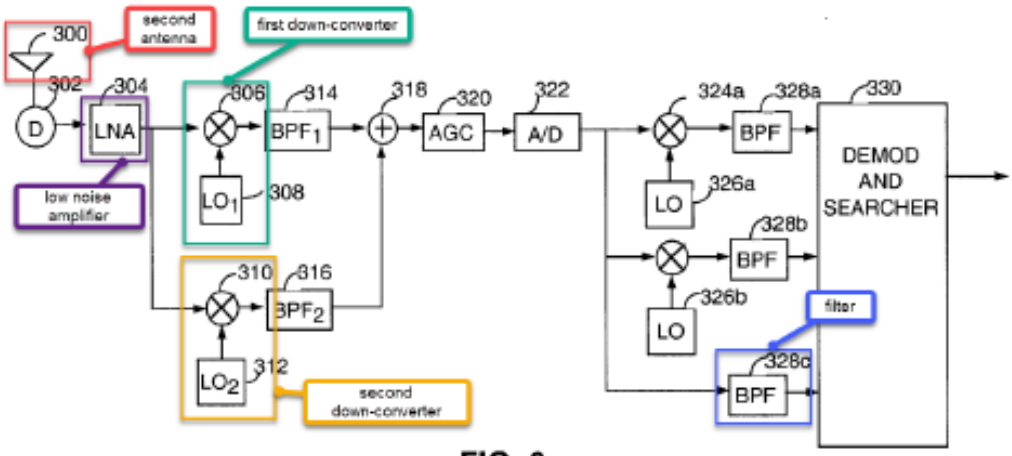

FIG. 6

The compatibility of Suzuki and Chen is supported by the fact that Chen discloses that its signals are on different frequency bands and simultaneously transmitted and received. Ex. 1009, 13:43-50; Figure 5. Likewise, in the Suzuki-Chen combination, the received signal is as depicted in Suzuki's Figure 13A, which contains two simultaneous signals on different frequency bands. Ex. 1003, ¶200.

(c) 14b

"amplifying the received signal in a low noise amplifier resulting in an amplified received up-converted signal": Chen discloses the received signals of its receiver are "provided … to ***low noise amplifier (LNA)*** 304" that outputs an ***amplified received up-converted signal*** because the signal from Suzuki was up-converted (*see* claims 10e and 10f in Ground 2). Ex. 1009, 13:60-62; Ex. 1003, ¶¶201-02.

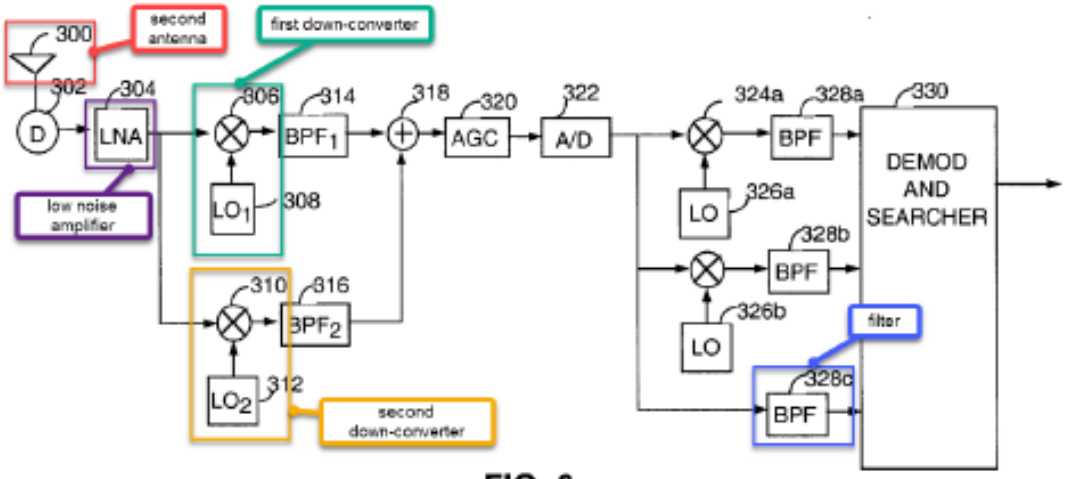

FIG. 6

"the bandwidth of said low noise amplifier is greater than the difference between the lowest frequency in the first up-converted frequency range and the highest frequency in the second up-converted frequency range": As explained in Ground 2, Suzuki's predistorter transmits the signal depicted in Figure 13A, where f1L is the ***"lowest frequency in the first up-converted frequency range"*** and f2H is the "***highest frequency in the second up-converted frequency range."*** Ex. 1003, ¶203. The ***difference*** between f1L and f2H is the blue line.

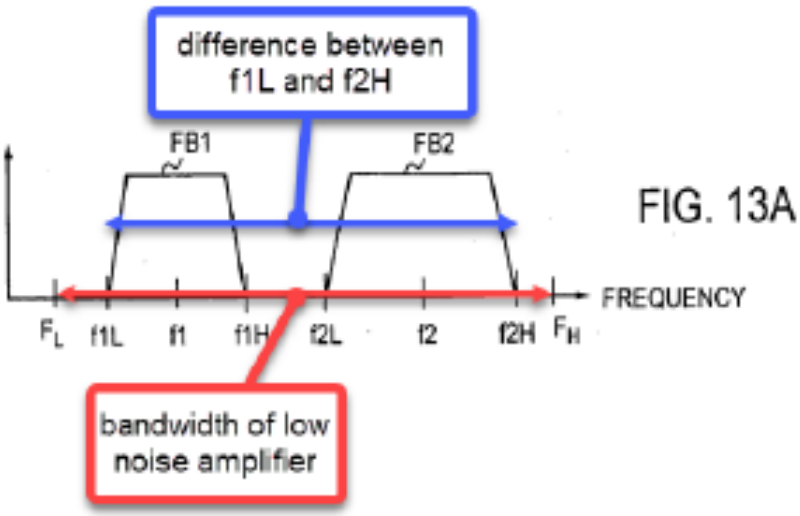

FIG. 13A

A POSITA would understand the bandwidth of an amplifier, including a low noise amplifier, is at least the bandwidth of the signal it amplifies. Ex. 1003, ¶204. A POSITA would further understand the bandwidth of the signal is the width of the total frequency band (marked in red in annotated Figure 13A). Indeed, Chen describes amplifying signals that have wider bandwidths than those in Suzuki. Ex. 1009, 4:56-65 (78 MHz bandwidth); Ex. 1004, ¶93 (15 MHz bandwidth). Thus, the bandwidth of the LNA is ***greater than*** the bandwidth of the difference between f1L and f2H.

(d) 14c

"down-converting the amplified received up-converted signal using a first down-converter … to produce a fourth analog signal": Chen discloses a mixer 306 is the ***first down-converter*** that ***down-converts*** the amplified signal to produce a wide baseband signal (***a fourth analog signal***). Ex. 1003, ¶¶205-06. Specifically,

"[t]he amplified signal [***amplified received up-converted signal***] is provided to mixer 306" (***first down-converter***) which "***down convert***s the signal in accordance with a signal provided by local oscillator, which brings the 5 MHz band consisting of carriers 250a, 250b and 250c down to a MHz wide baseband signal [***fourth analog signal***]." Ex. 1009, 13:63-66.

"down-converting … using … a signal corresponding to the first RF center frequency": A POSITA would understand the mixer's use of a "signal provided by local oscillator" is the mixer performing down-conversion using a ***signal corresponding to the first RF center frequency*** because in a conventional down-converter, the local oscillator shifts the input signal to a lower frequency center and, to do so, the local oscillator signal must correspond with the frequency center of the signal it is downconverting. Ex. 1003, ¶207; Ex. 1023, 102 ("To ensure ***identical carrier frequencies*** at the transmitter and the receiver, we can use quartz crystal oscillators, which generally are very stable. Identical crystals are cut to yield the same frequency at the transmitter and the receiver."); Ex. 1009, 13:60-14:6 (downconverting using a signal from local oscillator 308).

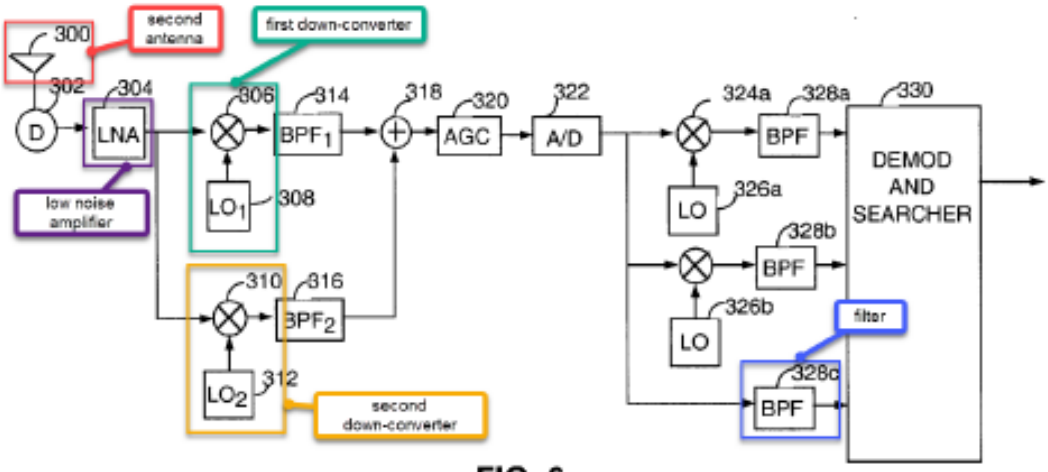

FIG. 6

"fourth analog signal corresponding to the first analog signal": In Suzuki-Chen, mixer 306 (***first down-converter***) down-converts the signal at the first frequency range (red line in Figure 13A below), which was generated from the ***first analog signal***, as discussed in claim 10c and 10e. Thus, the baseband signal produced by the first-downconverter is a fou***rth analog signal that corresponds to the first analog signal*** (*i.e.*, the fourth analog signal is the received version of the first analog signal, which was included in the received transmission). Ex. 1003, ¶208.

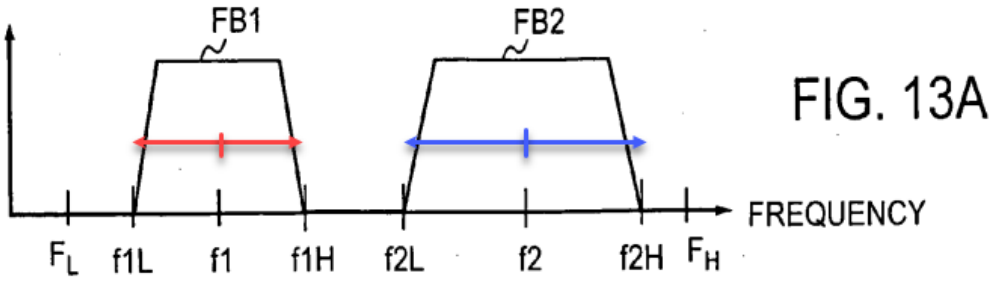

FIG. 13A

(e) 14d

"***down-converting the amplified received up-converted analog signal using a second down-converter … to produce a fifth analog signal":*** Chen discloses the ***amplified received up-converted signal*** "is also provided to downconverter 310 [***second down-converter***] which brings the signal carried on carrier 252a down to base band [***fifth analog signal***]." Ex. 1009, 14:1-3; Ex. 1003, ¶¶209-10.

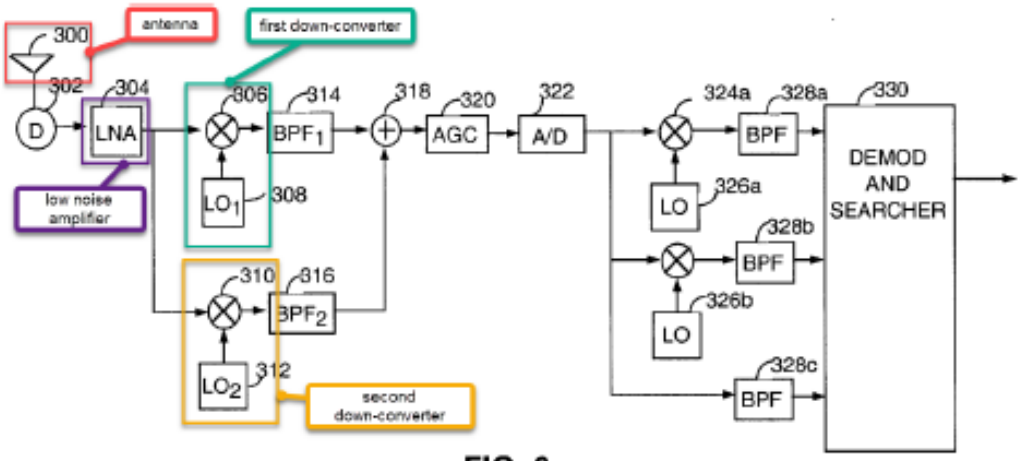

FIG. 6

"down-converting … using … a signal corresponding to the second RF center frequency": Figure 6 of Chen also depicts that second downconverter 310 receives a signal from second local oscillator 312, which a POSITA would understand is a ***signal corresponding to the second RF center frequency*** because, as explained above, the local oscillator's signal must correspond with the frequency center of the signal it is downconverting. Ex. 1003, ¶211; Ex. 1023, 102.

"fifth analog signal corresponding to the second analog signal": In Suzuki-Chen, downconverter 310 (***second down-converter***) downconverts the signal at the second frequency range (blue line in Figure 13A below), which was generated from

the second analog signal, as discussed in claim 10d and 10f. Thus, the baseband signal produced by the second downconverter is a ***fifth analog signal that corresponds to the second analog signal*** (*i.e.*, the fifth analog signal is the received version of the second analog signal, which was included in the received transmission). Ex. 1003, ¶212.

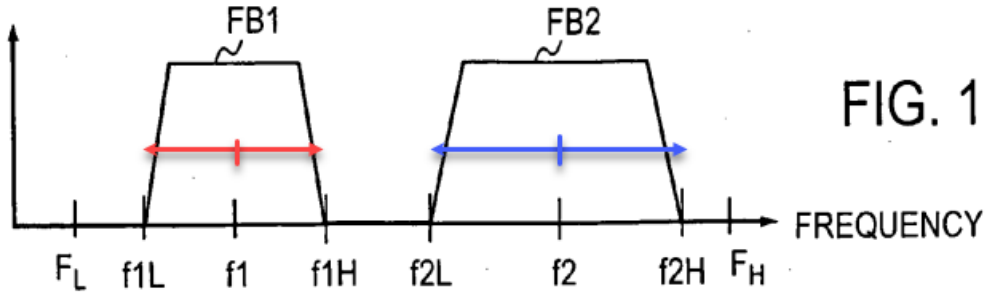

FIG. 13A

3. Claim 24pre

To the extent the preamble is limiting, a POSITA would understand Chen's Figure 6 is a "block diagram" of an electronic circuit, because it contains circuit components such as an amplifier, downconverters, and filters. Ex. 1009, 3:8-10; Ex. 1003, ¶213.

(a) Claim 24a

See Claim 14c. In Suzuki-Chen, Chen's mixer 306 (***first down-converter circuit***) receives an amplified signal containing Suzuki's signal on the first frequency range in Figure 13A (***first input of a first up-converted signal***) and a local oscillator signal (***second input***). The local oscillator signal is a ***demodulation signal having a first RF frequency*** because the local oscillator shifts the higher frequency

center to a low frequency center—in Suzuki-Chen, it will shift Suzuki's first RF frequency center to a baseband frequency center. Figure 6 also depicts that mixer 306 outputs a down-converted signal. Ex. 1003, ¶¶214-15.

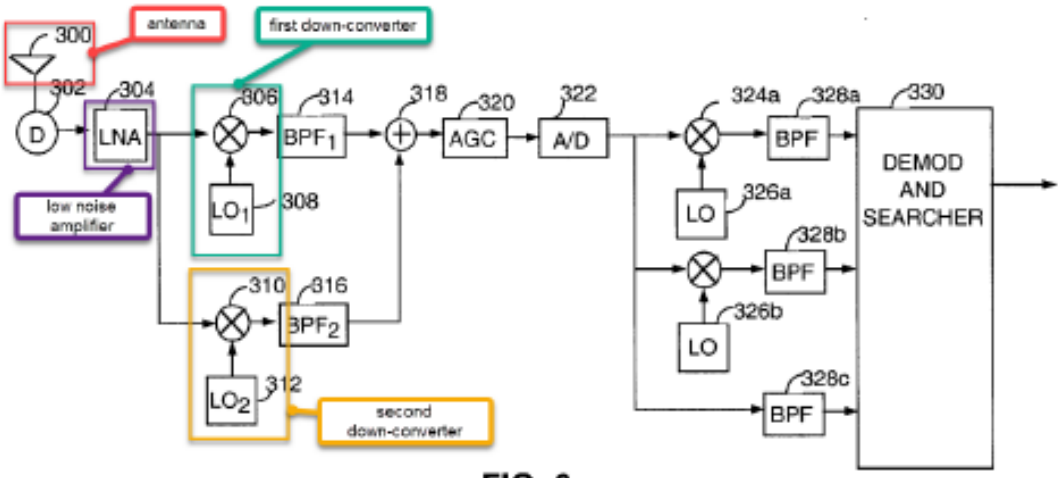

FIG. 6

(b) Claim 24b

"a second down-converter circuit having a first input …, a second input …, and an output, …,": *See* claim 14d. Chen's Figure 6 depicts downconverter 310 as having two inputs: the amplified signal (***first input***) and a second local oscillator (***second input***). For the reasons discussed in claim 14c, the local oscillator provides a demodulation signal having a second RF frequency, this time to downconvert the signal at the second frequency range (***a second RF frequency different than the first RF frequency***) in Figure 13A of Suzuki. Ex. 1003, ¶¶216-18.

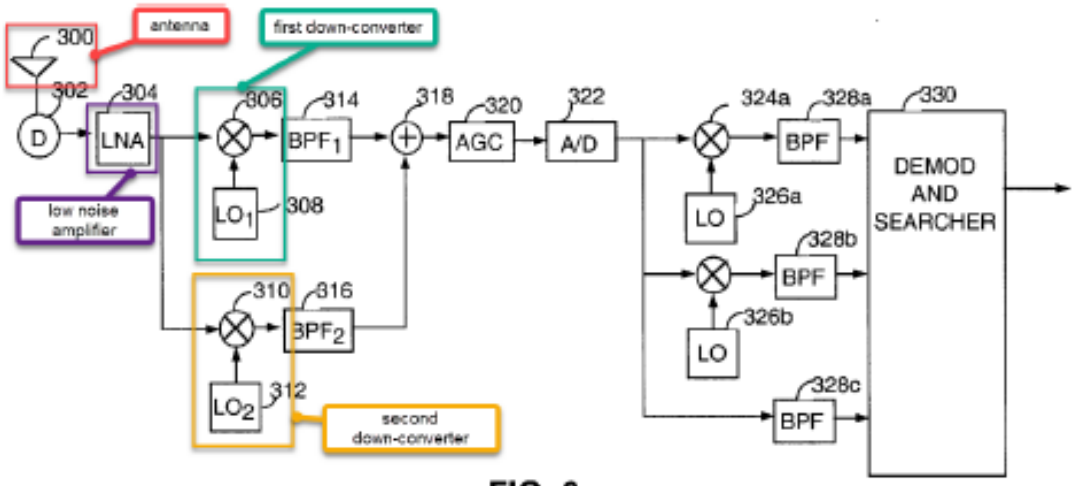

FIG. 6

"wherein the first up-converted signal comprises a first signal modulated at the first RF frequency and a second signal modulated at the second RF frequency": The up-converted signal is the amplified signal received by antenna 300. In Suzuki-Chen, this antenna receives the signal transmitted by Suzuki as depicted in Figure 13A. Ex. 1003, ¶219. This signal has a first and second signal modulated at different RF frequencies, as discussed in Ground 2 for claims 1 and 10.

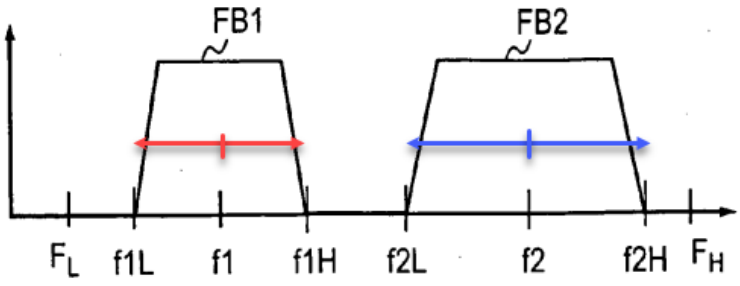

FIG. 13A

(c) Claim 24c

Chen discloses the output of the mixer 306 and downconverter 310 are, after downconversion, "already at baseband" and "***provided directly*** to filter 328c." Ex. 1009, 14:13-15; Ex. 1003, ¶220.

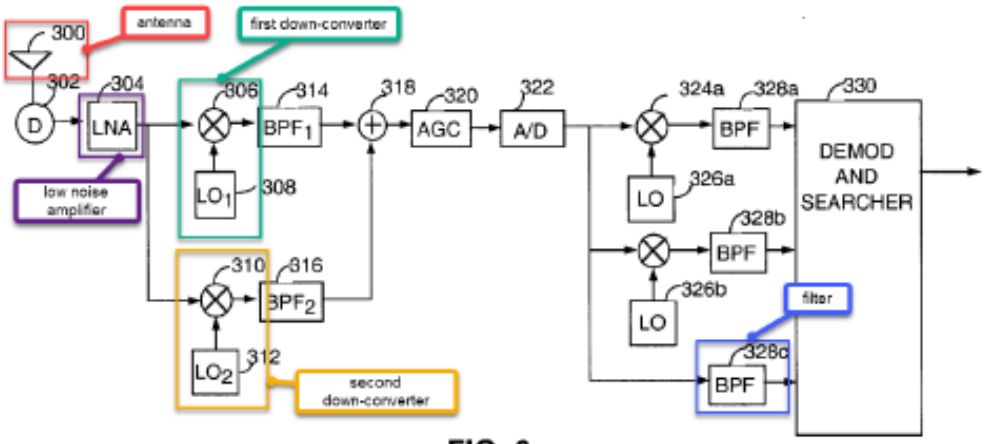

FIG. 6

E. <u>Ground 5:</u> Claims 6, 13, and 21 are obvious over Suzuki and Etemad

Claims 6, 13, and 21 recite that the two information or signals that are combined into the transmitted signal are encoded using a "first wireless protocol" and a "second wireless protocol."

Patent Owner's infringement contentions from the litigation allege, for example, "[t]he aggregation of low and mid-band carriers in both Frequency Division Duplex (FDD) and Time Division Duplex (TDD)" discloses claims 6, 13,

and 21. Ex. 1029, 6, 90, 127 (emphasis in original). Under this apparent construction, the claims are rendered obvious by Suzuki in view of Etemad.[5] Ex. 1003, ¶¶221-22.

Etemad is directed to "[m]ulticarrier techniques for wireless communications." Ex. 1014, Abstract. In Etemad, a transmission has "the primary carrier with a first portion of a RF spectrum, and the secondary carrier with a second portion of the RF spectrum." *Id*., 6:37-39. Etemad also discloses that "the primary carrier may utilize a Time Division Duplex (TDD) mode, while the secondary carrier provides Frequency Division Duplex (FDD) mode." *Id*., 5:36-39. Thus, Etemad discloses a multicarrier signal where the first and second signals use different wireless protocols under Patent Owner's apparent construction. When combined with Suzuki, they render obvious claims 6, 13, and 21. Ex. 1003, ¶223.

A POSITA would have been motivated to combine Suzuki and Etemad. As discussed above, Suzuki teaches transmitting multi-carrier signals and indicates its system is applicable to multiple types of communications protocols, including GSM, which uses TDM and FDM. Ex. 1024, 9:59. A POSITA would have been motivated to combine Suzuki with Etemad's teachings of using TDD and FDD for the different carriers. Ex. 1003, ¶224.

[5] Petitioners do not concede that the plain and ordinary meaning of claims 6, 13, and 21 include FDD and TDD as different wireless protocols.

A POSITA would have been motivated to make this modification because of the well-known benefits of using TDD/FDD in a multi-carrier signal. Ex. 1003,

¶225. As explained by Etemad, using TDD/FDD can be responsive to "a given set of design and performance constraints" for the system. Ex. 1014, 5:51-52. *I.e.*, there are scenarios where using TDD and FDD would be optimal or highly beneficial. For example, TDD is useful for low-bandwidth scenarios because it divides resources by time. Ex. 1003, ¶225. TDD also allows use of the same RF spectrum for both upload and download by assigning certain time slots to upload or download, providing flexibility to systems that may have upload/download needs that frequently vary. *Id*. TDD is especially useful for high-download scenarios since the time resources can be allocated to mostly downloading. On the other hand, FDD is useful for simultaneous upload and download since those channels can be assigned different frequency resources. *Id*. It was known that FDD is better for coverage whereas TDD is better for capacity. *Id*.

Indeed, as explained by Dr. Almeroth, the above reasons are why the GSM standard uses both techniques. Ex. 1024, 9:59. Since Suzuki is explicitly compatible with GSM (Ex. 1004, ¶4), a POSITA would have recognized these benefits would be applicable to Suzuki and would have supported the combination of Suzuki and Etemad. Ex. 1003, ¶226.

A POSITA would understand it would be beneficial to use TDD, FDD, or both in a multi-carrier system to accommodate varying needs and constraints of a particular network at a particular time with a particular traffic pattern. Ex. 1003, ¶227. Thus, users with high-download needs can be assigned a TDD carrier, and users with low-bandwidth needs can be assigned an FDD carrier. *Id*. Given these well-known benefits from TDD and FDD in a multi-carrier system, a POSITA would have been motivated to incorporate Etemad's teachings into Suzuki. *Id*.

A POSITA would have reasonably expected this combination to succeed. TDD and FDD had long been known and POSITA would have been familiar with their implementation, including as described by Etemad. Ex. 1003, ¶228. Implementing TDD and FDD into Suzuki would have been well within the capabilities of a POSITA. *Id*. Moreover, Etemad explicitly teaches that TDD and FDD are compatible with multi-carrier signals, which are the subject of Suzuki. And Suzuki explicitly teaches its system is compatible with GSM, which uses TDMA and FDMA—supporting a POSITA's expectation of success. *Id*.

Finally, Suzuki, Etemad, and the '802 patent are analogous art because all are directed to the field of multi-carrier transmissions, that is, simultaneously transmitting multiple sets of information using different frequency bands. Ex. 1014, Abstract ("Multicarrier techniques for wireless communications system are described."); Ex. 1003, ¶229.

F. <u>Ground 6:</u> Claims 1-4, 6-8, 10, 13, 17, 21-22, and 24 are obvious over Fernandez and Montojo

Fernandez and Montojo independently render the independent claims obvious. Fernandez details prior art systems that generate multi-carrier signals by combining multiple input signals into a single signal transmitted by an antenna. Fernandez discloses use of DACs and upconverters for each input signal and that each input signal is amplified using its own amplifier, rather than a single amplifier after the signals are combined. Montojo is another Qualcomm publication, and is directed to multi-carrier transmissions using a single power amplifier, and methods of optimizing power apportionment across multi-band signals to be simultaneously transmitted. (Ex. 1003, ¶¶230-31).

As discussed below, the claims' single amplifier is obvious based on Fernandez alone, yet Montojo expressly discloses combining multiple signals into a single signal amplified using a single amplifier. A POSITA would have found it obvious to combine Montojo's single amplifier with Fernandez's system. Ex. 1003, ¶232.

1. Motivation to Combine

A POSITA would have been motivated to combine Fernandez's parallel system for generating a multi-carrier signal with Montojo's single amplifier that amplifies a multi-carrier signal and single antenna for transmitting the amplified signal. Ex. 1003, ¶¶233-34. Fernandez teaches wireless signals are generated for a

particular frequency range using a "prior art signal generating system 10" for each frequency range, which are combined at summing circuit 21 (Figure 2A below). Each signal generating system performs its own amplification. As discussed below, a POSITA would have found it obvious to modify Fernandez to use Montojo's single amplifier.

FIG. 2A

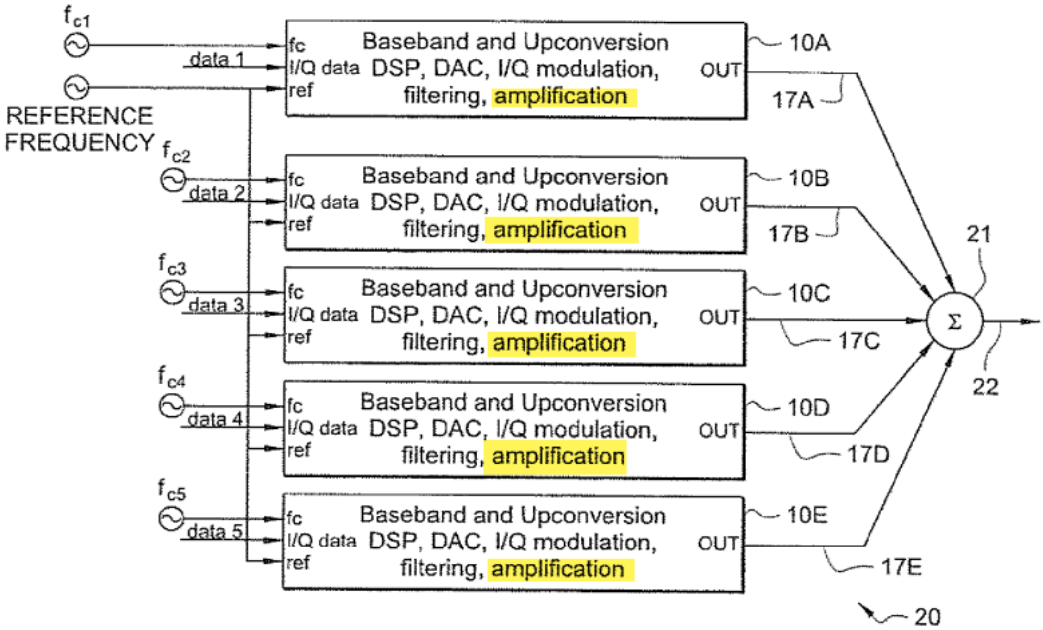

A POSITA would have been motivated to make this modification because of well-known benefits of using a single amplifier to amplify a multi-carrier wireless signal. Ex. 1003, ¶235. Indeed, a POSITA would have been motivated to use a single amplifier based on Fernandez's disclosure alone. A single amplifier has several advantages compared to multiple amplifiers, including lower complexity, a

single (vs. multiple) potential point of failure, and lower cost. *Id*. A POSITA viewing Fernandez's disclosure alone would have found a single amplifier to be a simple matter of design preference. *Id*.

These well-known benefits are further underscored by Montojo (Ex. 1003, ¶236), which teaches generating a multi-carrier signal and explains that while "multiple power amplification circuits, each dedicated to one carrier and each including a power amplifier" is an option, this runs against "limitations on space, manufacturing cost, power consumption and other factors," which "dictate the need to share resources among the carriers, including power amplification circuitry." Ex. 1006, ¶5. Montojo teaches "***it would be advantageous*** to utilize a ***single power amplifier*** for transmission of a plurality of carriers transmitted by a multi-carrier terminal." *Id*. A POSITA would have known that using a single amplifier would achieve these benefits, including lower complexity, single (as opposed to multiple) potential point of failure, and lower cost. Other benefits included reduction in space usage and power consumption. Ex. 1003, ¶236. Montojo is dedicated to teaching one way of using a single power amplifier for multi-carrier transmissions. Montojo's single amplifier system is shown, for example, in annotated Figure 5:

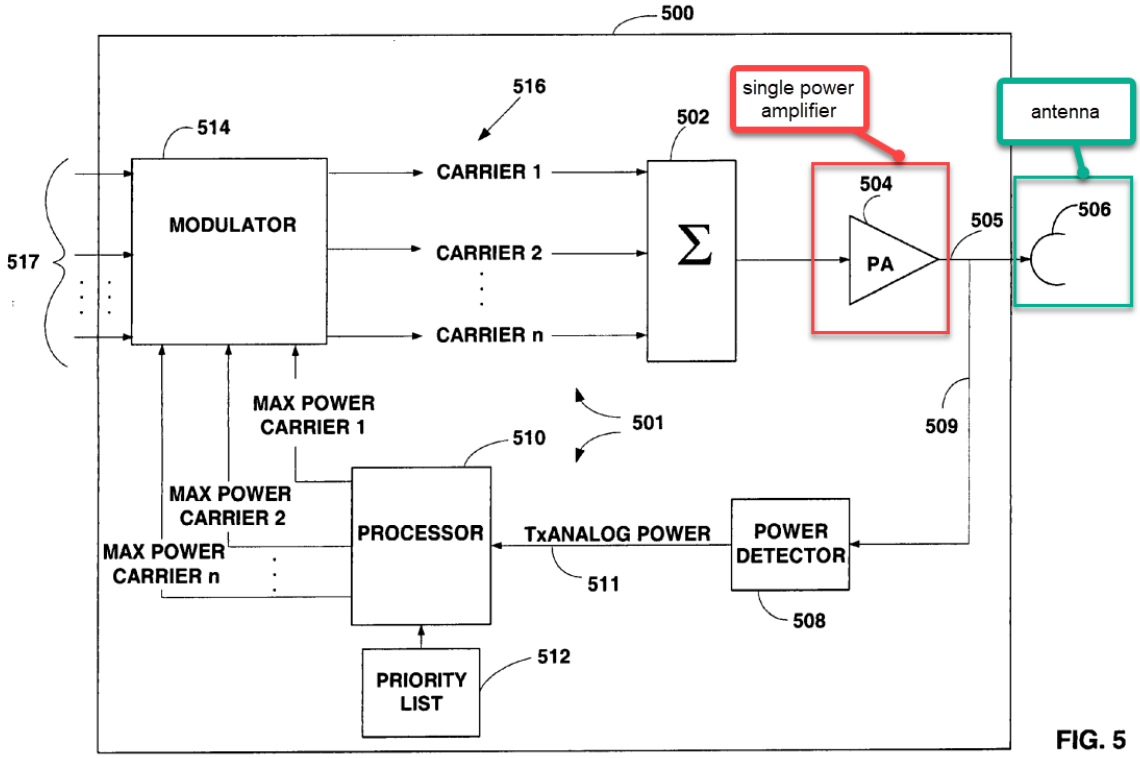

FIG. 5

A POSITA would have reasonably expected success in modifying Fernandez to use a single amplifier and antenna based either on Fernandez's disclosure alone or in combination with Montojo. Ex. 1003, ¶237. Using a single amplifier was well-known, as shown by Montojo, which teaches how to implement a single amplifier for multi-carrier transmissions. Ex. 1006, ¶¶21, 42, Fig. 5. Suzuki, discussed above, likewise uses a single amplifier for multi-carrier transmissions. Ex. 1004, Figs. 5-9. Implementing Montojo's single amplifier and antenna in Fernandez would have been well within the skill of a POSITA. A revised version of Fernandez Figure 2A shows one way to modify Fernandez in view of Montojo by removing amplification from each of Fernandez's signal generators and using Montojo's single amplifier

and antenna. Ex. 1003, ¶237. Moreover, by the time of the '802 patent, power amplifiers that could amplify wideband multi-carrier signals of WiMAX and UWB (mentioned by Fernandez) were widely available. *Id*.; Ex. 1025.

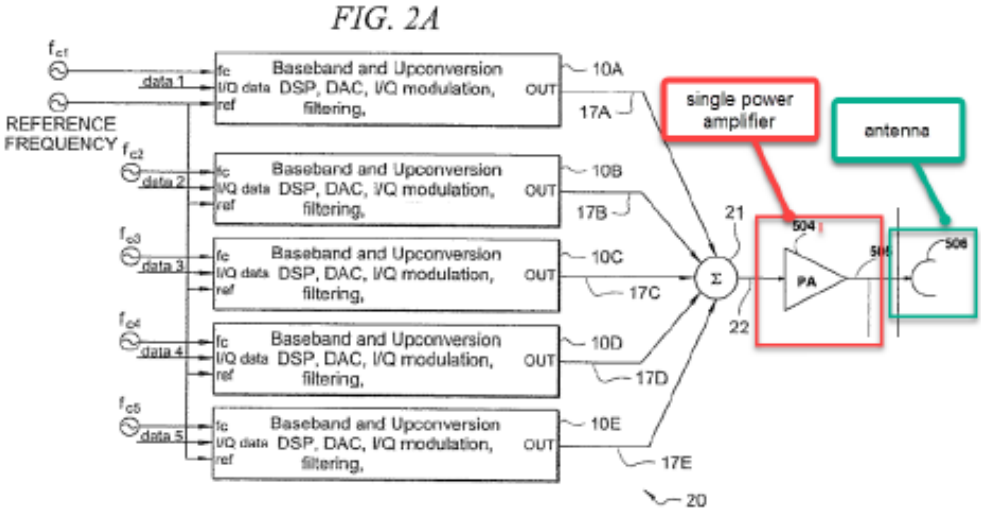

Fernandez and Montojo are directed to the same field of endeavor: simultaneously transmitting multiple sets of information using different frequency bands. Ex. 1005, ¶8 ("[S]umming the output of multiple signal generators is a common technique to create multi-carrier wireless signals."); Ex. 1006, Abstract ("[A] multi-carrier access terminal having a transmitter with a single power amplifier … for a multi-carrier signal"); Ex. 1003, ¶238.

2. 1pre

To the extent the preamble is limiting, Fernandez discloses "summing the output of multiple ***signal generators*** is a common technique to create multi-carrier ***wireless signals***." Ex. 1005, ¶8; Ex. 1003, ¶239.

(a) 1a

Fernandez discloses multiple "signal generators" that receive "data" as input. Ex. 1005, ¶8; Fig. 2A. In Figure 2A, "data 1" is the ***first information***. The signal generator converts that to an "RE signal[] 17A" (***first frequency range***), which is part of the "multi-carrier wireless signal 22" (depicted in Figure 2B). *Id*. ¶8 ("***information content*** at one carrier frequency"). In Fernandez-Montojo, this signal is transmitted by an antenna, *i.e*. ***wireless transmitter***. Ex. 1003, ¶240.

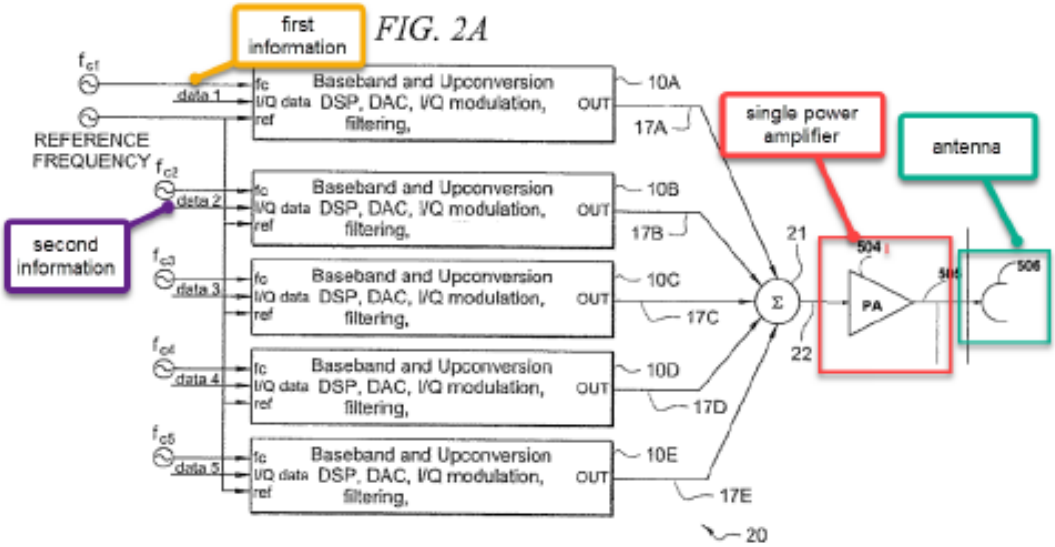

Signal 17A is the ***first frequency range*** and has center frequency f_{c1}, which Fernandez refers to as the "carrier frequency" and a POSITA would understand is the center frequency. Ex. 1005, ¶9; Ex. 1003, ¶241 (explaining that modulated carrier signal is centered around its frequency); Ex. 1005, ¶5 ("***centered at frequency*** [f_{c1}]"). As depicted in Figure 2B, 17A has a ***first highest frequency and first lowest frequency.***

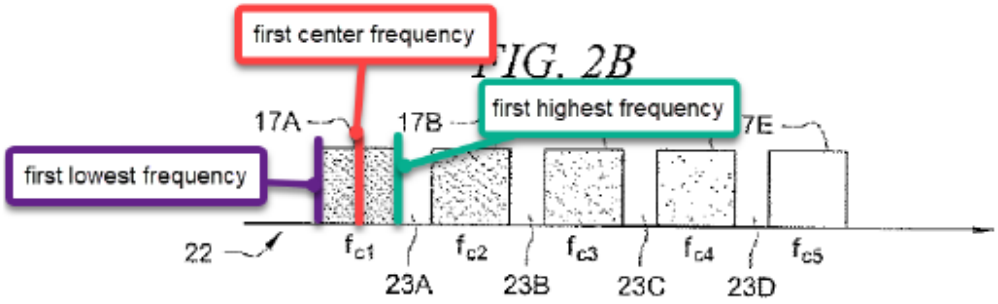

(b) 1b

Fernandez discloses "data 2" (***second information***) is converted into "RE signal[] 17B" (***second frequency range***) as part of "the multi-carrier wireless signal 22." Ex. 1005, ¶8; Fig. 2A; Ex. 1003, ¶¶242-43.

With respect to "***simultaneously transmitting … using the same wireless transmitter***," the '802 patent describes one embodiment within the scope of this claim involves "transmit[ting] the digital data simultaneously as an electromagnetic signal using two different carrier frequencies." Ex. 1001, 11:18-20. As discussed in Ground 2, a POSITA would understand "simultaneously transmitting" to include transmitting the information on a single signal over an antenna. Ex. 1021, 3:13-24, 4:50-51, Fig. 1; Ex. 1003, ¶244.

As with the description of the '802 patent, Fernandez similarly discloses RE signals combined into a single signal. Ex. 1005, ¶8 ("Such signals 17A-17E are summed by summing circuit 21 to generate ***a*** multi-carrier wireless signal 22."); Ex. 1003, ¶245. In Fernandez-Montojo, this signal is sent over a single antenna, as discussed above.

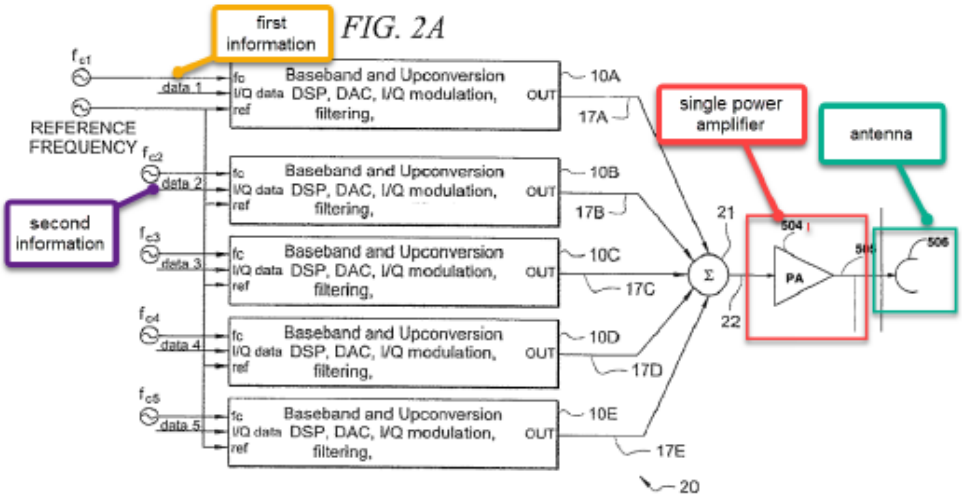

Figure 2B depicts a multi-carrier signal that simultaneously transmits frequency ranges 17A and 17B (***first/second frequency ranges***). Id. Frequency range 17B is centered at f_{c2}, which is greater than first center f_{c1}. Ex. 1003, ¶246; Ex. 1005, ¶5 ("***centered at frequency*** [f_{c2}]"). Frequency range 17B also has highest and lowest frequencies.

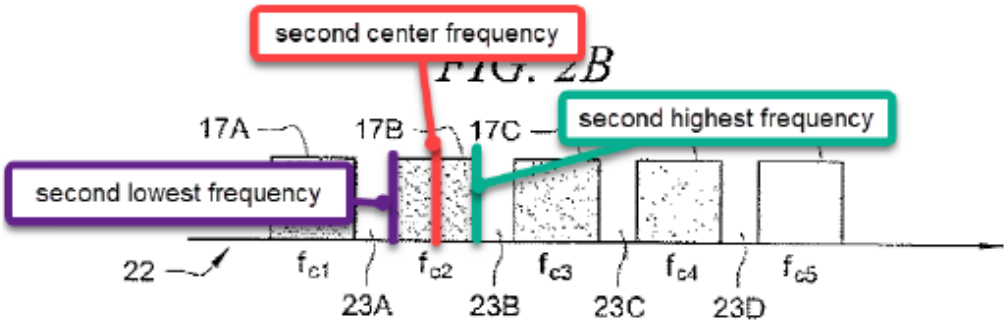

3. Claim 2

This limitation requires a gap between first and second frequency ranges. Ex. 1003, ¶247. Fernandez teaches "as illustrated in FIG. 2B, such a multi-carrier

wireless signal 22 … ***contains 'holes' in the spectrum***." Ex. 1005, ¶8; Ex. 1003, ¶248.

The presence of hole 23A means the difference between ***first and second center frequencies*** f_{c1} and f_{c2} (red double arrow) is greater than the sum of one- half the ***first and second frequency ranges*** (17A, purple arrow and 17B, green arrow), as depicted in annotated Figure 2B. Ex. 1003, ¶249.

FIG. 2B

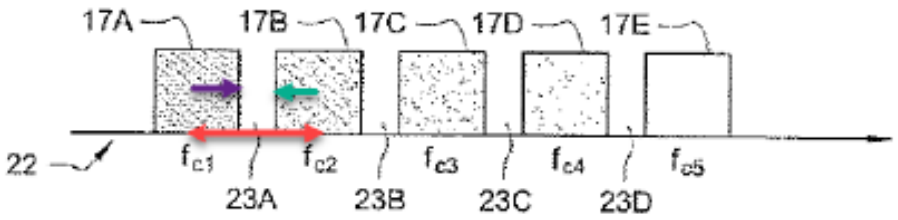

4. Claim 3

Montojo's Figure 5 depicts multiple carriers being combined and amplified with a ***single power amplifier*** and then transmitted over antenna 506. Ex. 1005, ¶42 ("[A] plurality of carriers … are summed by a signal combiner 502 which sums the carriers to produce a multi-carrier signal that is input to a power amplifier (PA) 504."); Ex. 1003, ¶¶250-51.

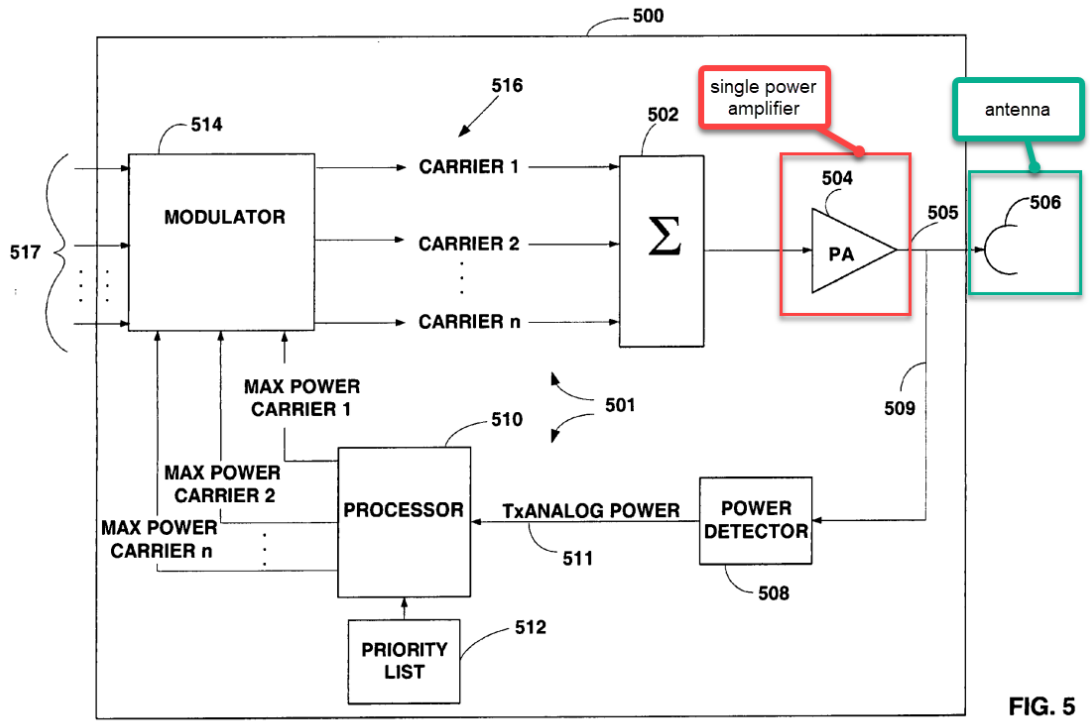

FIG. 5

As discussed, it would have been obvious to modify Fernandez to use Montojo's single amplifier after generating each carrier signal from ***first and second information*** and combining them. Ex. 1003, ¶252. A POSITA would understand this amplifier is in said ***wireless transmitter*** because it amplifies the signal that is then transmitted. *Id*.

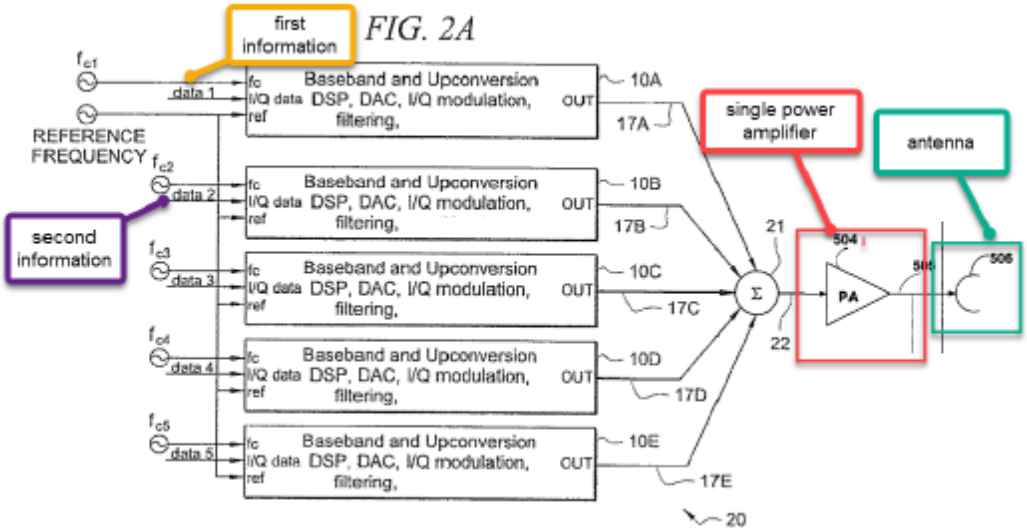

A POSITA would have also considered it obvious that the amplifier is ***in the wireless transmitter***. A POSITA would understand a wireless transmitter constitutes both an amplifier and antenna. It was common knowledge that an amplifier converts low-power RF signals into a higher-power signal to drive a transmitting antenna. Ex. 1003, ¶253. It was common for wireless transmitters to contain both an amplifier and antenna for transmission given the necessity to amplify signals to drive the antenna. *Id*. A POSITA would have reasonably expected a wireless transmitter containing an amplifier and antenna to succeed because such devices were common. *Id*.

5. Claim 4

Figure 2A depicts "wideband" signal 22 has ***bandwidth*** (red line) that exceeds the ***difference between the lowest frequency of 17A and highest frequency of 17B*** (blue line). Ex. 1005, ¶8. As discussed, a POSITA would further understand the

bandwidth of the amplifier is at least the bandwidth of the signal it outputs, *i.e*. the red line in the annotated figure, and that wideband amplifiers were readily available. Ex. 1003, ¶254; Ex. 1025.

FIG. 2B

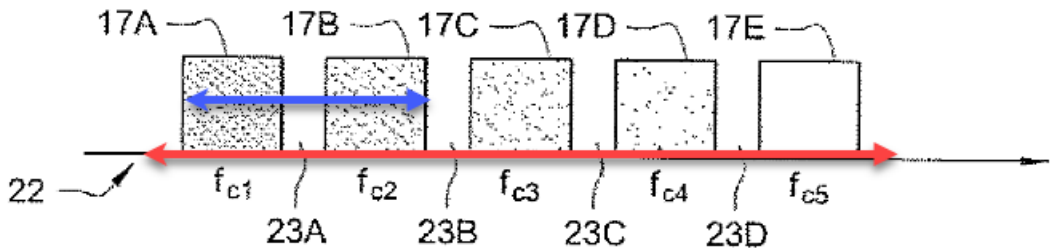

6. Claim 6

Fernandez teaches using different protocols such as WiMAX and Ultra-Wideband technology that each operate on different frequency bands. Ex. 1005,

¶¶3-4. Fernandez also teaches that multi-carrier signals allow WiMAX "communication to appear as background noise that does not interfere with pre-existing wireless systems (as in UWB, discussed below)." *Id*. Thus, a POSITA would understand WiMAX and UWB are ***different wireless protocols that operate on different frequency bands***. Ex. 1003, ¶255. Indeed, the '802 patent similarly states "ultra-wideband (UWB)" and "wireless local area network (WLAN) protocol" "may be used as the first protocol or second protocol." Ex. 1001, 7:67-8:2.

7. Claims 7 and 8

Fernandez discloses the ***same*** "Data_In signal 71" may be input to two signal generators that generate carrier signals on ***different frequencies***. Ex. 1005, ¶80; Fig. 8. Accordingly, using the ***same data*** is taught (claim 7), and since that same data also comes from the ***same data stream***, using the same data stream is also taught (claim 8). A POSITA would understand this teaching also applies to Figure 2A, and would have considered it obvious. Ex. 1003, ¶¶256-257.

8. 10pre

See Claim 1pre. Ex. 1003, ¶258.

(a) 10a/10b

Fernandez teaches that in Figure 2A, "data 1" and "data 2" are the ***first*** and ***second digital signal comprising data to be transmitted***, respectively. Specifically, "the multi-carrier technique of FIGS. 2A-2B can generate signals 22 with energy at many places in a given bandwidth," with each carrier frequency carrying "information content." Ex. 1005, ¶9. As depicted in Figure 2A, each signal generator receives input "data" resulting in RF signals 17A-17E. Ex. 1005, ¶5. Because this data is converted to analog using a DAC, a POSITA would understand the first and second data are ***digital signals***. Ex. 1003, ¶¶259-60.

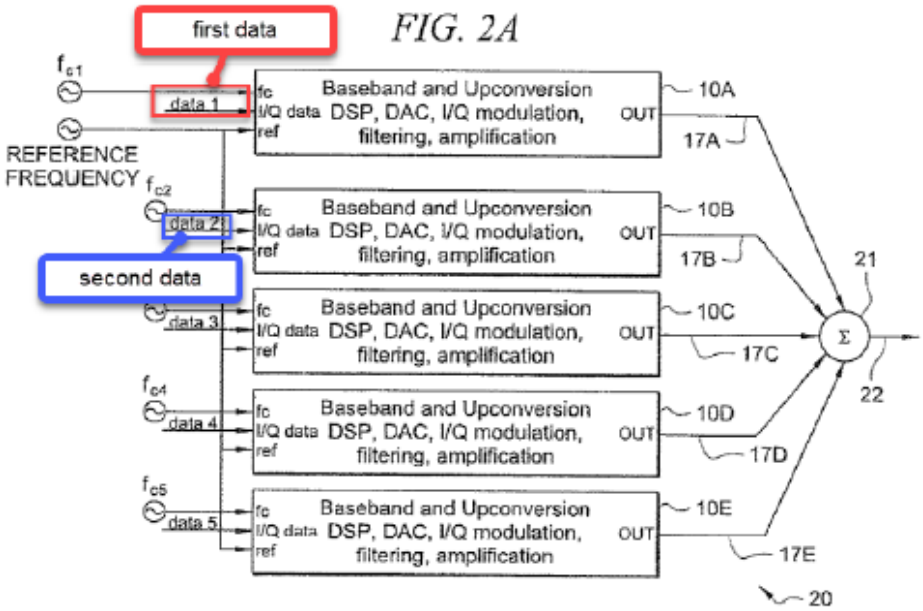

(b) 10c/10d

"converting the [first/second] digital signal … using a [first/second] digital-to-analog converter": Fernandez discloses the signal generators in Figure 2A perform "DAC." Fernandez discloses each signal generator is "the exemplary signal generator 10 described with FIG. 1," and the first and second data input of the first and second signal generator are converted to "I/Q data." Ex. 1005, ¶8; Ex. 1003, ¶¶261-62.

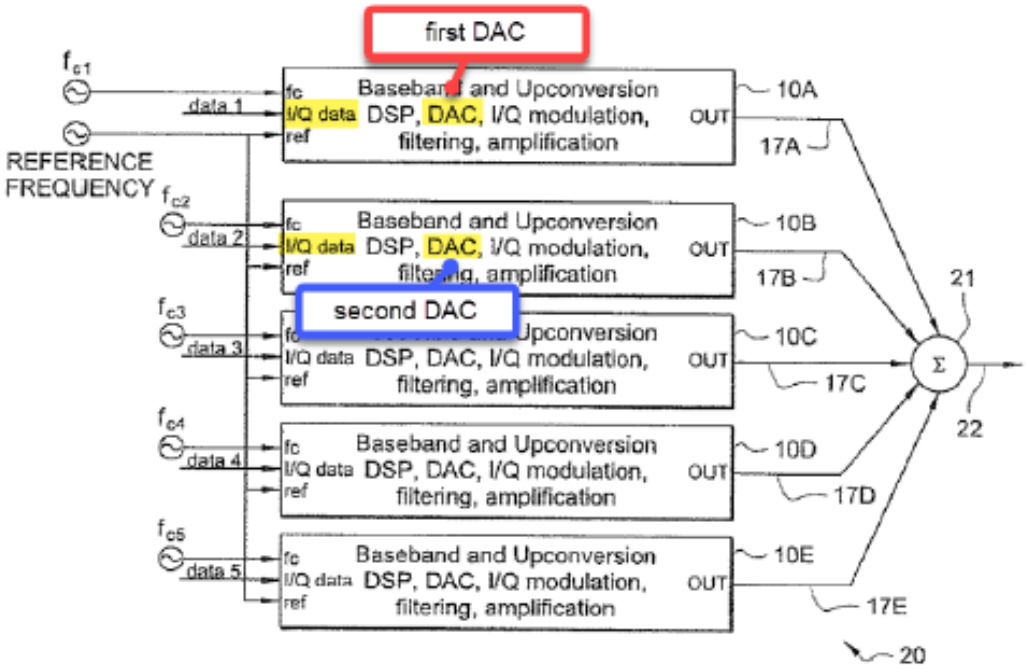

Fernandez further teaches the signal generators are depicted in Figure 1 and comprise an "in-phase (I) DAC 11 and a quadrature (Q) DAC 12 for I and Q channels." Ex. 1005, ¶5. A POSITA would understand in-phase and quadrature are components of a digital signal. Ex. 1003, ¶263.

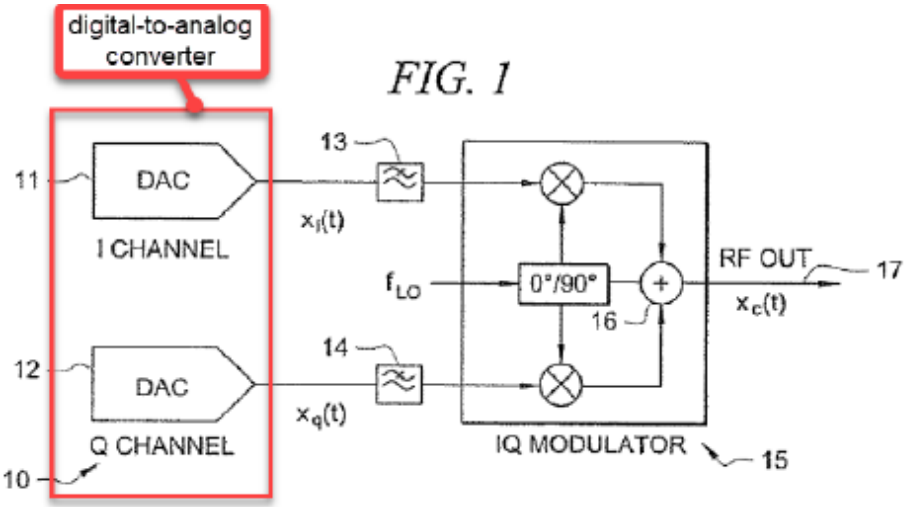

Thus, Fernandez discloses, in Figure 2A, the first and second data digital signals are converted to I/Q components and converted to analog signals using DACs 11 and 12. Ex. 1003, ¶264.

"[first/second] analog signal carrying the [first/second] data across a [first/second] frequency range": As discussed herein, the signal generator performs upconversion on analog signals to generate "radio frequency (RF) signals" such as 17A and 17B having frequency ranges centered at f_{c1} and f_{c2}, respectively. Ex. 1005, ¶¶6, 8. A POSITA would understand the upconversion moves the analog signal to a new center frequency. Ex. 1003, ¶265. Thus, a POSITA would understand the first and second analog signals carry data across first and second frequency ranges upconverted to be centered on first and second RF frequency centers fc1 and fc2. *Id.*

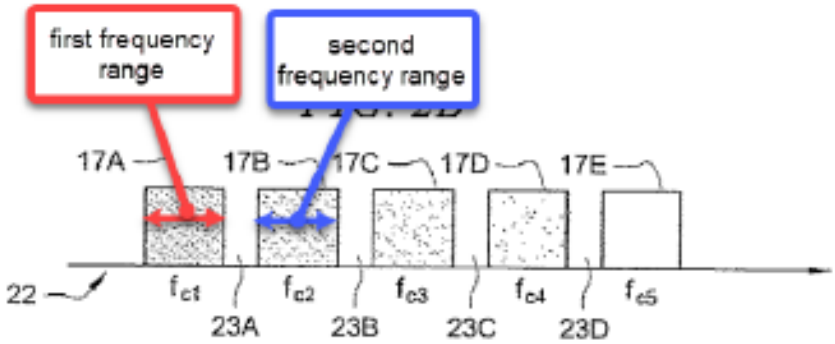

(c) 10e/10f

"up-converting the [first/second] analog signal to a [first/second] RF center frequency": Fernandez discloses each signal generator in Figure 2A performs "Upconversion" on first and second analog signals. Ex. 1003, ¶¶266-67.

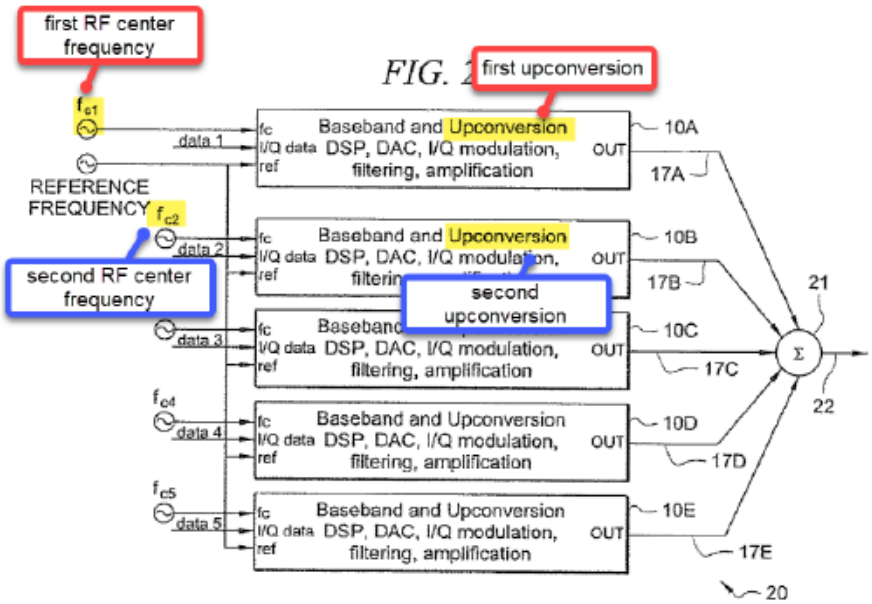

Specifically, for each signal generator, after the digital signal is converted to analog using DAC, analog signals are "modulated by an IQ modulator 15 … to generate an ***upconverted*** wideband signal output 17 centered at frequency FLO (where 'LO' refers to local oscillator)." Ex. 1005, ¶5. In Figure 2B, first and second RF center frequencies f_{c1} and $_{fc2}$ are passed to first and second signal generators as FLO. Ex. 1003, ¶268; Fig. 1 (revised below). Thus, the upconversion will upconvert the first and second analog signal to first and second RF frequency ranges centered on $_{fc1}$ and f_{c2}. *Id.*

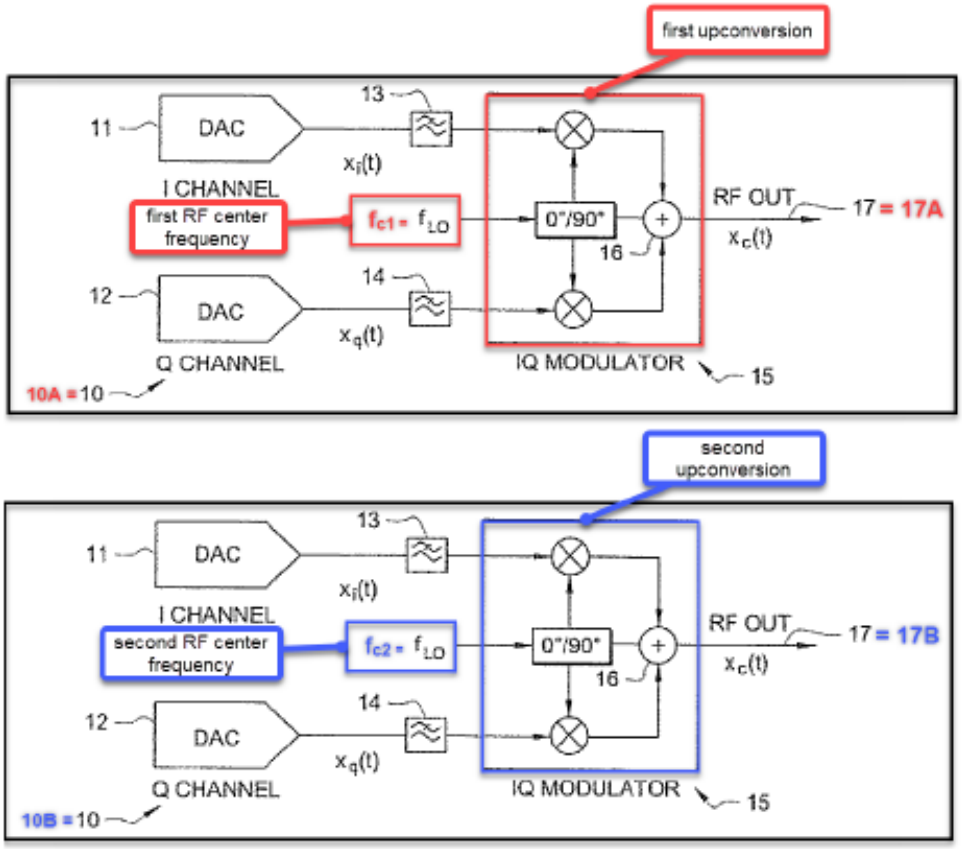

Fernandez provides the equations for upconverting the input baseband signal to the new frequency center (Ex. 1005, ¶6), where, xc(t) is the "baseband signal" and $x_z(t)$ is the "upconverted baseband signal." *Id.*; Ex. 1003, ¶269.

> $x_z(t)=x_I(t)+jx_Q(t)$, where $x_I(t)$ and $x_Q(t)$ are real signals.
>
> $$x_c(t)=\sqrt{2}\cdot Re[x_z(t)\cdot e^{j2\pi f_{c1}}]$$
>
> $$x_c(t)=\sqrt{2}\cdot[x_I(t)\cos(2\pi f_c t)-x_Q(t)\sin(2\pi f_c t)]$$

"[first/second] up-converted frequency range from the [first/second] RF center frequency minus one-half the [first/second] frequency range to the [first/second] RF center frequency plus one-half the [first/second] frequency range": Fernandez discloses first and second signal generators generate RF signal 17A (***first frequency range***) and 17B (***second frequency range***). Ex. 1003, ¶270. As discussed above, 17A is centered on ***first RF center frequency*** f_{c1} and 17B is centered on ***second RF center frequency*** f_{c2}. Figure 2B depicts first and second up-converted frequency ranges are their respective RF center frequencies plus and minus one-half their frequency ranges. *Id.*

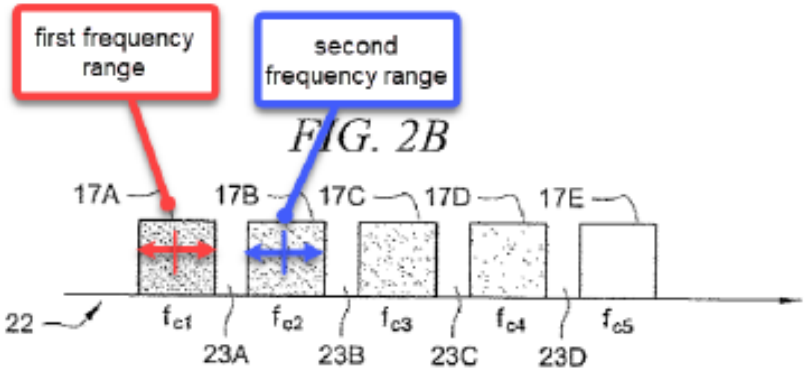

"wherein a frequency difference between the first RF center frequency and the second RF center frequency is greater than the sum of one-half the first frequency range and one-half the second frequency range": *See* Claim 2. Ex. 1003, ¶271.

(d) 10g

Fernandez discloses the ***first and second up-converted analog signals are combined*** by summing circuit 21. Specifically, "as shown in the example of FIGS. 2A and 2B, ***summing the output of multiple signal generators*** is a common technique to create multi-carrier wireless signals. … ***Such signals 17A-17E are summed by summing circuit 21 to generate a multi-carrier wireless signal 22***." Ex. 1005, ¶8; Ex. 1003, ¶272.

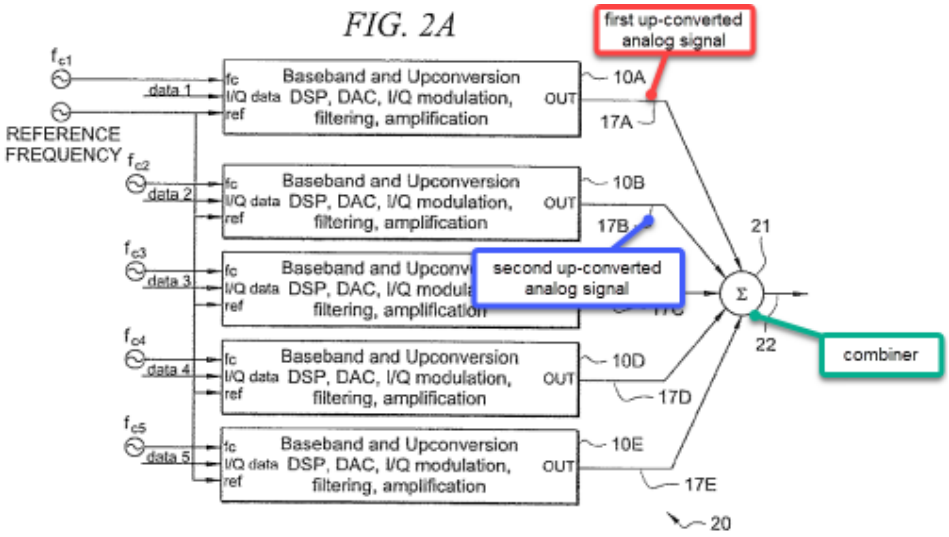

(e) 10h

As discussed, Montojo teaches "it would be advantageous to utilize a ***single power amplifier*** for transmission of a plurality of carriers transmitted by a multi-carrier terminal." Ex. 1006, ¶5. Thus, a POSITA would have found it obvious to modify Fernandez so amplification is performed after the RF signals are combined at combiner 21. Ex. 1003, ¶273. Revised Figure 2A reflects the combination and

depicts amplifying the combined up-converted signal in a power amplifier to generate an amplified signal.

FIG. 2A

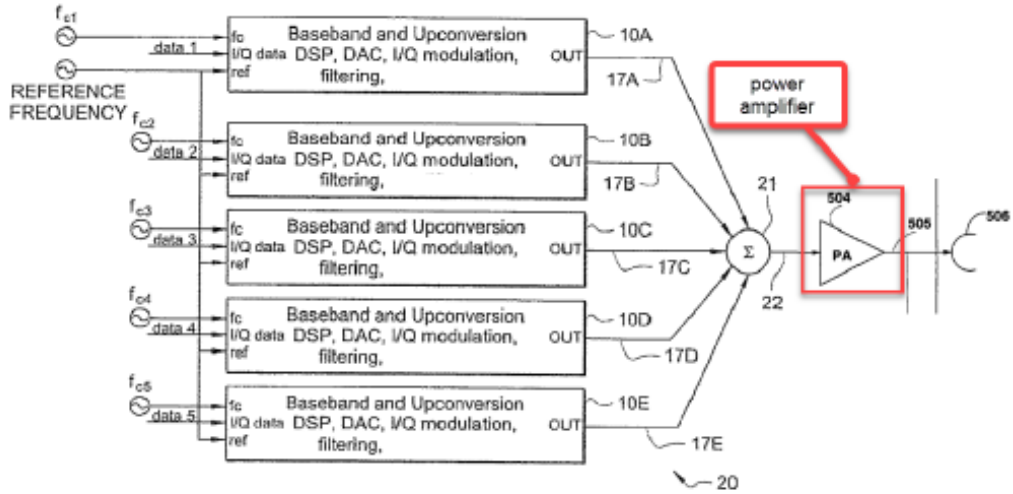

(f) 10i

Fernandez discloses the ***amplified combined up-converted signal*** "generated signal 22" is a "multi-channel ***communication format***." Ex. 1005, ¶¶8-9. A POSITA would understand since this signal is transmitted and communicated, it must have been transmitted using an antenna. Ex. 1003, ¶274.

Montojo's Figure 5 also depicts multiple carrier signals being combined and amplified with a single amplifier for transmission by antenna 506. Ex. 1006, ¶42. A POSITA would have likewise found it obvious to transmit the multi-carrier signal using an antenna in view of Montojo. Ex. 1003, ¶275.

Revised Figure 2A of Fernandez in view of Montojo depicts the amplified signal transmitted on antenna 506. Ex. 1003, ¶276.

FIG. 2A

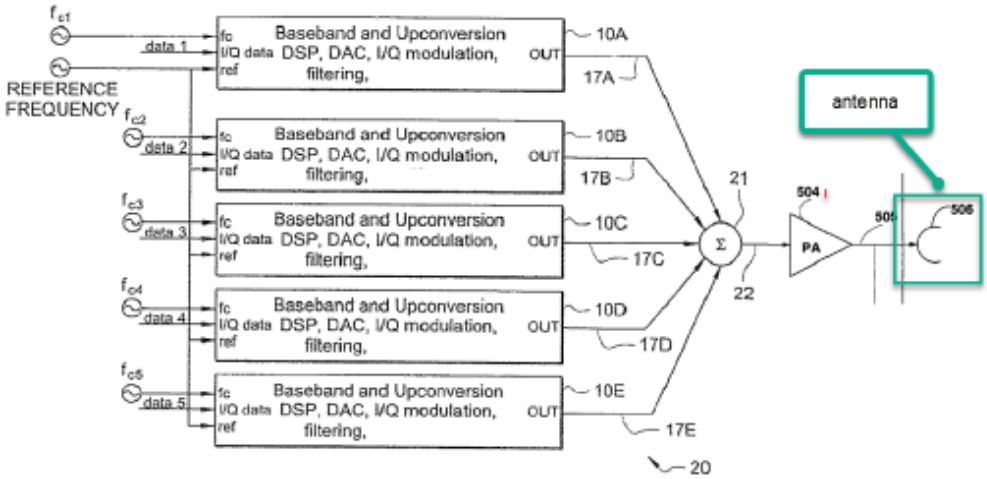

(g) 10j

See Claim 4. Ex. 1003, ¶277.

9. Claims 13, 17, 21

Claims 13, 17, and 21 mirror the above claims as set forth in the following chart. Fernandez-Montojo render these claims obvious for the same reasons as above. Ex. 1003, ¶¶278-286.

Claim Limitation	Corresponding Claim Limitation(s)
13	6
17pre	10pre
17a	10a. Fernandez further discloses a ***baseband digital system***. Ex. 1005, ¶6 ("upconvert[] baseband signal[s]"), ¶11 ("a general method is provided to increase a digitally synthesized signal's bandwidth by frequency interleaving ***multiple (i.e., at least 2) digitally synthesized signal sources of narrower bandwidth"***).
17b	10c

Claim Limitation	Corresponding Claim Limitation(s)
17c	10d
17d	10e
17e	10f
17f	10h
21	6

10. Claim 22

See claims 7 and 8 (***the second data corresponds to the first data***)[6] and claim 10g (***outputting a third up-converted signal comprising the first and second up-converted analog signals***). Ex. 1003, ¶¶287-88.

A POSITA would understand the ***power amplifier*** could also combine Fernandez's up-converted analog signals as explained for claim 10g, thereby producing a third up-converted signal comprising the up-converted first and second analog signals. Figure 2B depicts the combined analog signals. Ex. 1003, ¶289.

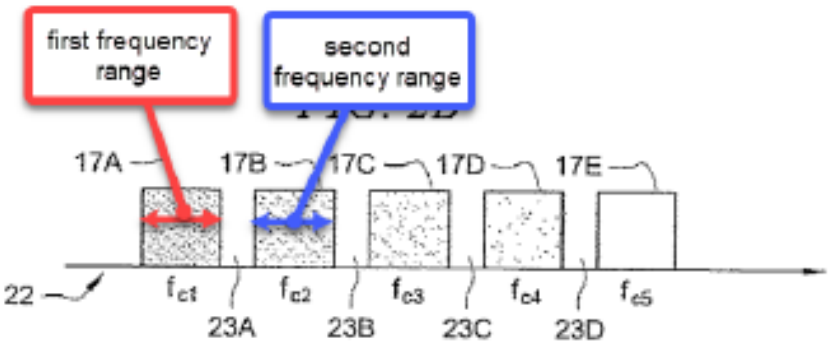

[6] See fn2, above.

G. <u>Ground 7:</u> Claims 7-9, 22, and 23 are obvious over Fernandez, Montojo, and Jalali

As with Suzuki-Jalali, a POSITA would have found it obvious to combine Fernandez-Montojo with Jalali, which teaches OFDM with TDM and that the signals in the multi-carrier signal can be from the same data. Ex. 1003, ¶290.

1. Motivation to Combine

A POSITA would have been motivated to combine Fernandez (as modified by Montojo) and Jalali. As discussed above, Fernandez teaches generating and transmitting a multi-carrier signal. Jalali teaches OFDM that also uses time-division multiplexing. A POSITA would have found it obvious to modify Fernandez-Montojo to use Jalali's time-divided OFDM method. Ex. 1003, ¶291.

A POSITA would have been motivated by the well-known benefits of using OFDM with time-division multiplexing, discussed in Ground 3, which equally apply to Fernandez. Ex. 1003, ¶292. Indeed, Fernandez discloses compatibility with WiMAX, which was known to use OFDMA (OFDM with tTDM) and thus Fernandez is readily applicable for Jalali's teachings of OFDM with TDM. *Id*.; Ex. 1027, ¶32.

A POSITA would have reasonably expected this combination to succeed. OFDM with TDM had long been known in the field and POSITA would have been familiar with its implementation, including as described by Jalali. Ex. 1003, ¶293.

Implementing OFDM with TDM in Fernandez-Montojo would have been well within the capabilities of a POSITA. *Id*.

Finally, as discussed above, Fernandez, Montojo, Jalali, and the '802 patent are all analogous art as they are directed to the same field of multi-carrier transmissions. *Id*., ¶294.

2. Claims 7, 8, and 22

Fernandez-Montojo in view of Jalali render obvious claims 7, 8, and 22. Ex. 1003, ¶295. Jalali states that with OFDM, "the overall transmission channel is essentially divided into a number of (L) parallel sub-channels that are used to transmit the same or ***different data***." Ex. 1008, 8:50-53; 9:1-4 ("same data being transmitted on both sub-channels"). In the Fernandez-Montojo-Jalali combination, Fernandez-Montojo would likewise transmit information that is the same data or from the same data stream on different frequency bands.

3. Claims 9 and 23

As discussed, a POSITA would have found it obvious to transmit Fernandez-Montojo's transmissions using Jalali's time-divided OFDM methods. Ex. 1003, ¶297. As discussed in Ground 3, Jalali discloses the claim 9 and 23 limitations.

H. <u>Ground 8:</u> Claims 14 and 24-25 are obvious over Fernandez, Montojo and Chen

As discussed in Ground 4, Chen describes a receiver that processes multi-carrier wireless transmissions as claimed by claims 14 and 24. The discussion in

Ground 4 with respect to Suzuki equally applies to Fernandez's data and frequency ranges. Ex. 1003, ¶298. And it would have been obvious to combine the Fernandez-Montojo transmitter with Chen's receiver for the same reasons discussed in Ground 4, including the benefits (and necessity) of conventional low noise amplifier, downconverters, and filter claimed in claims 14 and 24, and that this process is disclosed throughout the literature. Ex. 1003, ¶¶299. For Claim 25, see Ground 6, Claim 2. *Id*.

In addition, to the extent 14pre is limiting, and Patent Owner argues Fernandez does not disclose the second data being the same as the first data, Jalali discloses "the overall transmission channel is essentially divided into a number of (L) parallel sub-channels that are used to transmit the ***same or different data***." Ex. 1008, 8:50-53; Ex. 1003, ¶300. As explained in Ground 7, a POSITA would have found it obvious to incorporate such teachings into the Fernandez-Montojo transmitter (which is equally applicable to the Fernandez-Montojo-Chen combination).

I. <u>Ground 9:</u> Claims 6, 13, and 21 are obvious over Fernandez, Montojo, and Etemad

As discussed in Ground 5, Etemad discloses a multi-carrier signal using TDD and FDD for the different carriers, which meets claims 6, 13, and 21 under Patent Owner's interpretation. Ex. 1003, ¶301.

As further discussed in Ground 5, there were well-known benefits to using TDD and FDD within a multi-carrier signal, including flexibility to handle various

traffic scenarios. A POSITA would thus be motivated to incorporate Etemad's teachings into Fernandez-Montojo. Ex. 1003, ¶302.

A POSITA would have reasonably expected this combination to succeed. TDD and FDD had long been known and POSITA would have been familiar with its implementation, including as described by Etemad. Implementing TDD and FDD into Fernandez-Montojo would have been well within the capabilities of a POSITA. Ex. 1003, ¶303. Moreover, Etemad explicitly teaches that TDD and FDD are compatible with multi-carrier signals, which are also taught in Fernandez. *Id*.

As discussed in previous grounds, Fernandez, Montojo, and Etemad are all analogous art. *Id*., ¶304.

VII. *FINTIV*

Fintiv favors institution. The stay factor is neutral. The same parties are at issue. This Petition raises identical grounds as Samsung IPR2024-00606 filed February 2024. If Samsung's IPR is instituted, Petitioners will file to join in an inactive role. The Board's FWD in IPR2024-00606 is August 2025. The district court's scheduled trial is May 2025. This favors institution or is neutral. The litigation is in its infancy. Petitioners were diligent in filing, and this Petition challenges more claims than at issue in district court. These factors strongly favor institution. Finally, the strong merits also favor institution.

VIII. GENERAL PLASTIC

If the Board institutes Samsung's IPR, Petitioners will file to join in an inactive role. Thus, *General Plastics* does not apply. *See, e.g.*, *LG Elecs., Inc. v. Gesture Tech. Partners*, IPR2022-00092, Paper 8 at 5 (PTAB May 9, 2022).

IX. MANDATORY NOTICES AND FEES

A. Real Party-In-Interest

The real parties-in-interest for Petitioners are T-Mobile USA, Inc., AT&T Services Inc., AT&T Corp., AT&T Mobility LLC, Cellco Partnership d/b/a Verizon Wireless, Nokia of America Corporation, and Ericsson Inc.[7] Out of an abundance of caution and to avoid additional issues associated with real parties-in-interest,

[7] Out of an abundance of caution, Petitioners identify all current defendants in cases 2:23-cv-00380, - 00381, and -00382 as potential real parties in interest only for the purpose of this proceeding and only to the extent that Patent Owner contends that these separate legal entities should be named real parties in interest in this IPR. Petitioners do so to avoid the potential expenditure of resources to resolve such a challenge. Petitioners also acknowledge that each petitioner has a number of affiliates. No unnamed entity is funding, controlling, or otherwise has an opportunity to control or direct this Petition or Petitioner's participation in any resulting IPR. Petitioners are also not aware of any affiliate that would be barred from filing this Petition under 35 U.S.C. § 315(e).

Petitioner likewise identifies Samsung Electronics America, Inc. and Samsung Electronics Co., Ltd. because Petitioner's products are accused of infringement in their respective patent infringement actions.

B. Related Matters

- *Cobblestone Wireless, LLC v. AT&T Services Inc., et al.,* 2:23-cv-00380 (E.D. Tex.) filed August 25, 2023;
- *Cobblestone Wireless, LLC v. T-Mobile USA, Inc.,* 2:23-cv-00381 (E.D. Tex.) filed August 25, 2023;
- *Cobblestone Wireless, LLC v. Cellco Partnership d/b/a Verizon Wireless,* 2:23-cv-00382 (E.D. Tex.) filed August 25, 2023;
- *Cobblestone Wireless, LLC v. Samsung Electronics Co., Ltd. et al.,* 2:23-cv-00285 (E.D. Tex.) filed June 26, 2023;
- *Cobblestone Wireless, LLC v. Hewlett Packard Enterprise Co.et al,* 2:23-cv-00457 (E.D. Tex.) filed September 29, 2023;
- *Cobblestone Wireless, LLC v. CommScope Holding Co., Inc. et al,* 2:23-cv-00455 (E.D. Tex.) filed September 23, 2023; and
- *Cobblestone Wireless, LLC v. Cisco Systems, Inc.,* 2:23-cv-00454 (E.D. Tex.) filed September 29, 2023.

C. Counsel and Service Information

Petitioner provides the following counsel and service information. Petitioner consents to electronic service the email addresses listed in the table below. Pursuant to 37 C.F.R. § 42.10(b), a Power of Attorney accompanies this Petition.

LEAD COUNSEL	BACK-UP COUNSEL
John D. Haynes (Reg. No. 44,754) Alston & Bird LLP One Atlantic Center 1201 West Peachtree Street Atlanta, GA 30309 John.Haynes@alston.com 404-881-7000 Fax: 404-881-7777	David S. Frist (Reg. No. 60, 511) Alston & Bird LLP One Atlantic Center 1201 West Peachtree Street Atlanta, GA 30309 John.Haynes@alston.com 404-881-7000 Fax: 404-881-7777 Michael C. Deane (Reg. No. 70,389) Alston & Bird LLP One Atlantic Center 1201 West Peachtree Street Atlanta, GA 30309 John.Haynes@alston.com 404-881-7000 Fax: 404-881-7777

D. Payment of Fees

The undersigned authorizes the Office to charge the fee required for this Petition for *Inter Partes* Review to Deposit Account No. 16-0605. Any additional fees that might be due are also authorized.

X. CONCLUSION

For the reasons above, *inter partes* review is requested.

Date: June 28, 2024

Respectfully submitted,

/John D. Haynes/
John D. Haynes
Reg. No. 44,754
John.Haynes@alston.com
David S. Frist
Reg. No. 60,511
David.Frist@alston.com
Michael C. Deane
Reg. No. 70,389
Michael.Deane@alston.com

Attorneys for Petitioners,

T-Mobile USA, Inc., AT&T Services Inc., AT&T Mobility LLC, AT&T Corporation, Cellco Partnership d/b/a Verizon Wireless, Nokia of America Corporation, and Ericsson Inc.

CERTIFICATE OF COMPLIANCE WITH TYPE-VOLUME LIMITATION, TYPEFACE REQUIREMENTS, AND TYPE STYLE REQUIREMENTS

1. This Petition complies with the type-volume limitation of 14,000 words, comprising 14,000 words, as counted using the Microsoft Word software that was used to prepare this paper, excluding the parts exempted by 37 C.F.R. § 42.24(a).

2. This Petition complies with the general format requirements of 37 C.F.R. § 42.6(a) and has been prepared using Microsoft® Word 2016 in 14-point Times New Roman.

Date: June 28, 2024

Respectfully submitted,
/John D. Haynes/
John D. Haynes
Reg. No. 44,754
John.Haynes@alston.com
David S. Frist
Reg. No. 60,511
David.Frist@alston.com
Michael C. Deane
Reg. No. 70,389
Michael.Deane@alston.com

Attorneys for Petitioners,

T-Mobile USA, Inc., AT&T Services Inc., AT&T Mobility LLC, AT&T Corporation, Cellco Partnership d/b/a Verizon Wireless,

Nokia of America Corporation, and Ericsson Inc.

CERTIFICATE OF SERVICE

The undersigned hereby certifies that on June 28, 2024 true and correct copies of the foregoing document and supporting materials were served in its entirety on the Patent Owner at the following address of record as listed on PAIR via Priority Mail Express® or Express Mail:

Lowenstein & Weatherwax LLP (Cobblestone)
ATTN: Cobblestone
1016 Pico Blvd
Santa Monica, CA 90405
UNITED STATES
Official Correspondence Address

Kenneth Weatherwx - weatherwax@lowensteinweatherwax.com
Nathan Lowenstein – lowenstein@lowensteinweatherwax.com

Courtesy copies were also sent via electronic mail to Patent Owner's counsel of record in the related district court proceeding

Reza Mirzaie - rmirzaie@raklaw.com
Marc A. - Fenster mfenster@raklaw.com
Neil A. Rubin - nrubin@raklaw.com
Christian W. Conkle - cconkle@raklaw.com
Jonathan Ma - jma@raklaw.com
Amy E. Hayden - ahayden@raklaw.com
rak_cobblestone@raklaw.com

Date: June 28, 2024

/John D. Haynes/
John D. Haynes
Reg. No. 44,754
John.Haynes@alston.com
David S. Frist
Reg. No. 60,511
David.Frist@alston.com

Michael C. Deane
Reg. No. 70,389
Michael.Deane@alston.com

Attorneys for Petitioners,

T-Mobile USA, Inc., AT&T Services Inc., AT&T Mobility LLC, AT&T Corporation, Cellco Partnership d/b/a Verizon Wireless, Nokia of America Corporation, and Ericsson Inc.