US 20060276146A1

(19) United States

(12) Patent Application Publication

(10) Pub. No.: US 2006/0276146 A1

(43) Pub. Date: Dec. 7, 2006

Suzuki et al.

(54) MULTI-BAND LOOKUP TABLE TYPE PREDISTORTER

(75) Inventors: **Yasunori Suzuki**, Yokohama-shi (JP); **Shoichi Narahashi**, Yokohama-shi (JP)

Correspondence Address:
C. IRVIN MCCLELLAND
OBLON, SPIVAK, MCCLELLAND, MAIER & NEUSTADT, P.C.
1940 DUKE STREET
ALEXANDRIA, VA 22314 (US)

(73) Assignee: **NTT DoCoMo, Inc.**, Chiyoda-ku (JP)

(21) Appl. No.: **11/444,494**

(22) Filed: **Jun. 1, 2006**

(30) **Foreign Application Priority Data**

Jun. 3, 2005 (JP) 2005-164436

Publication Classification

(51) **Int. Cl.**
H04B 1/04 (2006.01)

(52) **U.S. Cl.** **455/114.3**

(57) **ABSTRACT**

A lookup table type predistorter for reading out distortion compensation data by using a difference signal between a power amplifier input signal and an output signal as a reference signal; wherein N input side variable band signal extractors extract transmitting signals in N frequency bands from the input signal, N output side variable band signal extractors extract signals in N frequency bands from the output of power amplifier, and N difference detectors detect differences between N frequency band signals respectively detected at the input side and the output side as N reference signals, which are used to read out N compensation data from N lookup tables, the N compensation data are added to the transmitting signals in N frequency bands, and N results of addition are combined to produce an output of the predistorter.

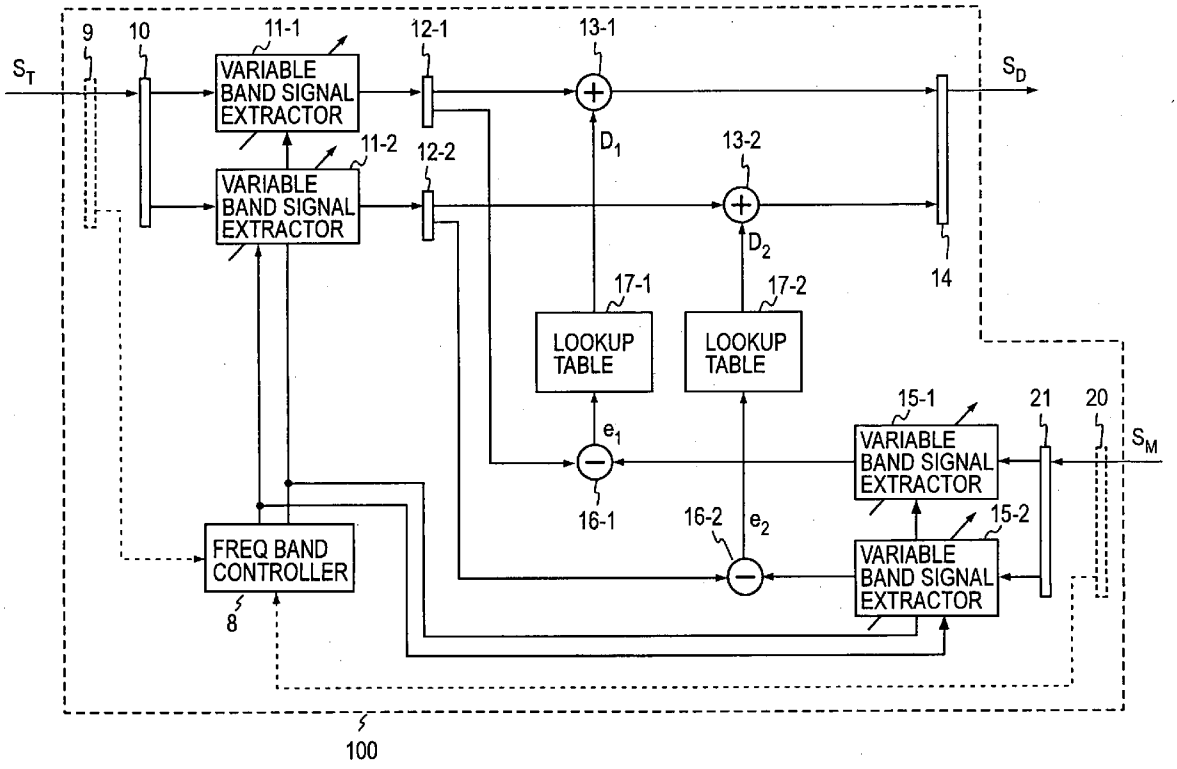

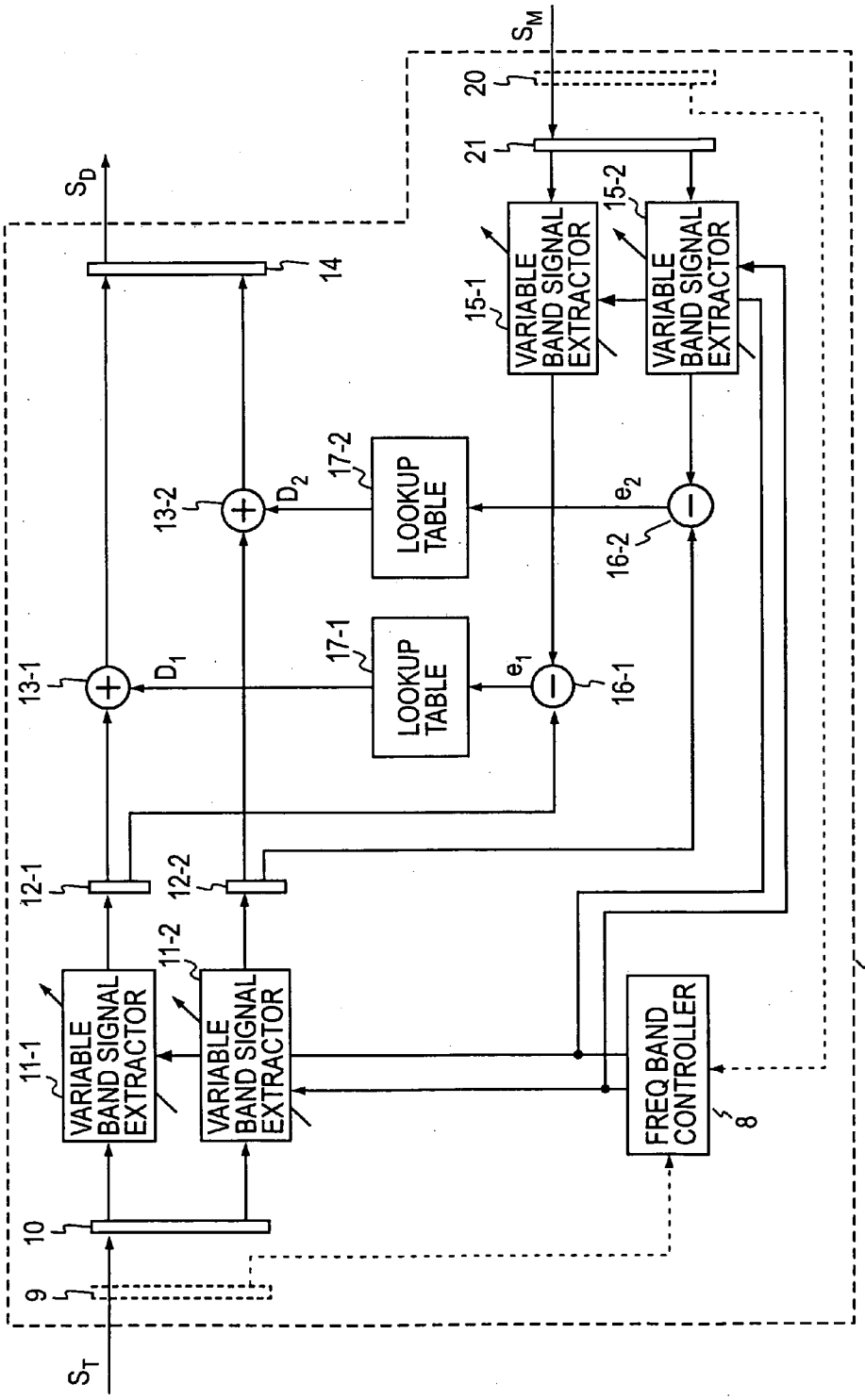
S_T
9
10
11-1
VARIABLE BAND SIGNAL EXTRACTOR
11-2
VARIABLE BAND SIGNAL EXTRACTOR
12-1
12-2
13-1
13-2
D_1
D_2
14
S_D
17-1
LOOKUP TABLE
17-2
LOOKUP TABLE
e_1
e_2
16-1
16-2
15-1
VARIABLE BAND SIGNAL EXTRACTOR
15-2
VARIABLE BAND SIGNAL EXTRACTOR
21
20
S_M
FREQ BAND CONTROLLER
8
100

FIG. 1

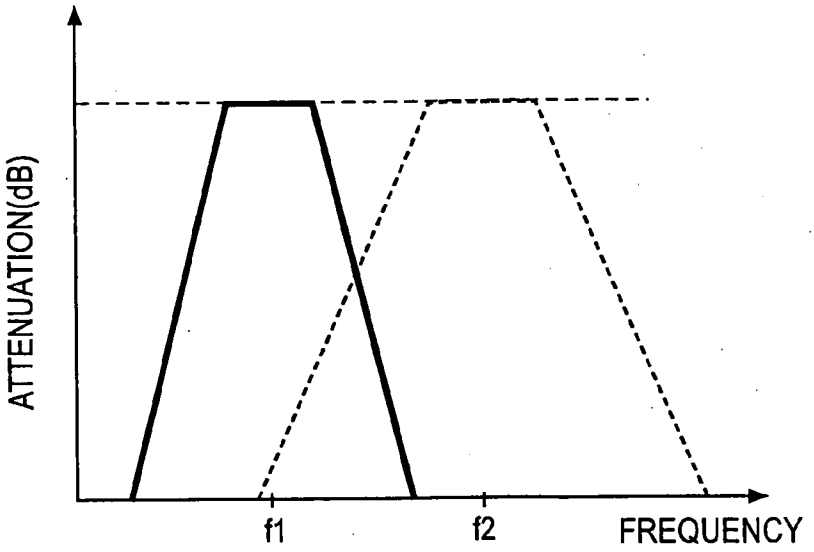
ATTENUATION(dB)
f1
f2
FREQUENCY

FIG. 2

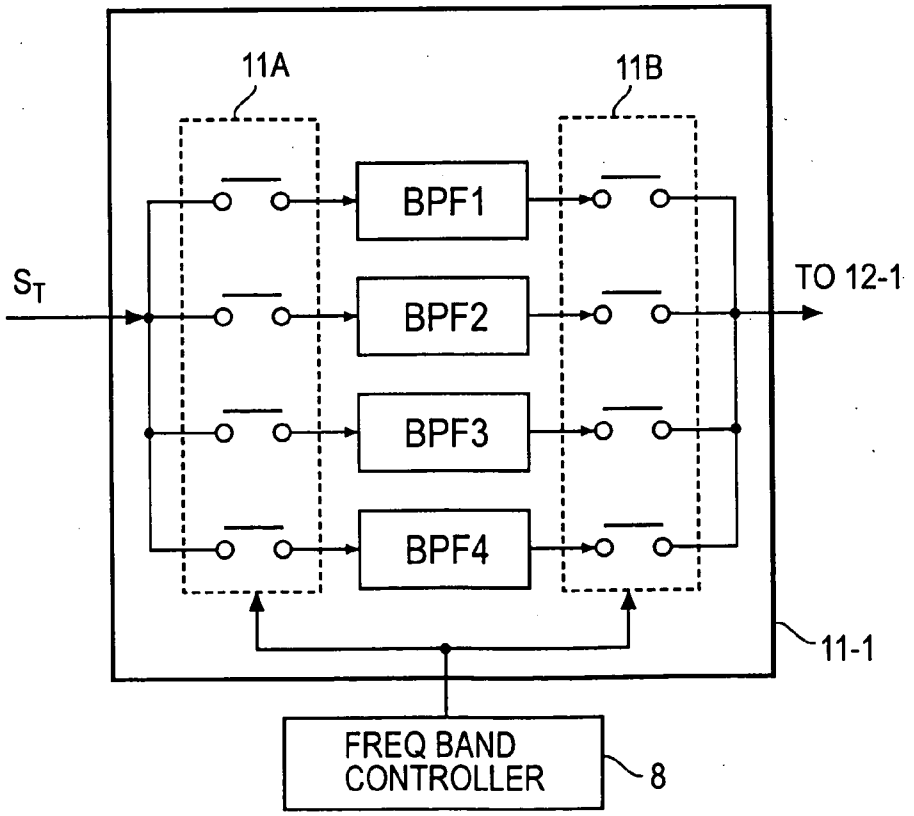
11A
11B
BPF1
BPF2
BPF3
BPF4
S_T
TO 12-1
11-1
FREQ BAND CONTROLLER
8

FIG. 3

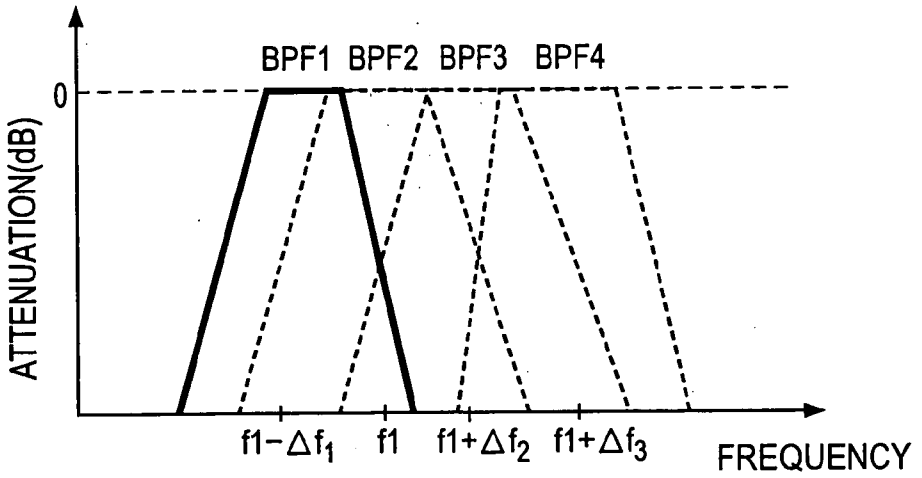
BPF1 BPF2 BPF3 BPF4
0
ATTENUATION(dB)
f1−Δf1
f1
f1+Δf2
f1+Δf3
FREQUENCY

FIG. 4A

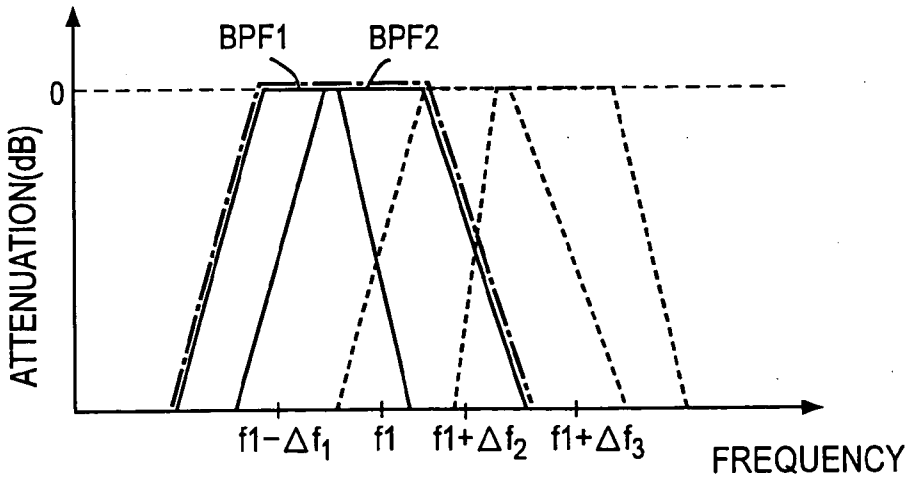
BPF1
BPF2
0
ATTENUATION(dB)
f1−Δf1
f1
f1+Δf2
f1+Δf3
FREQUENCY

FIG. 4B

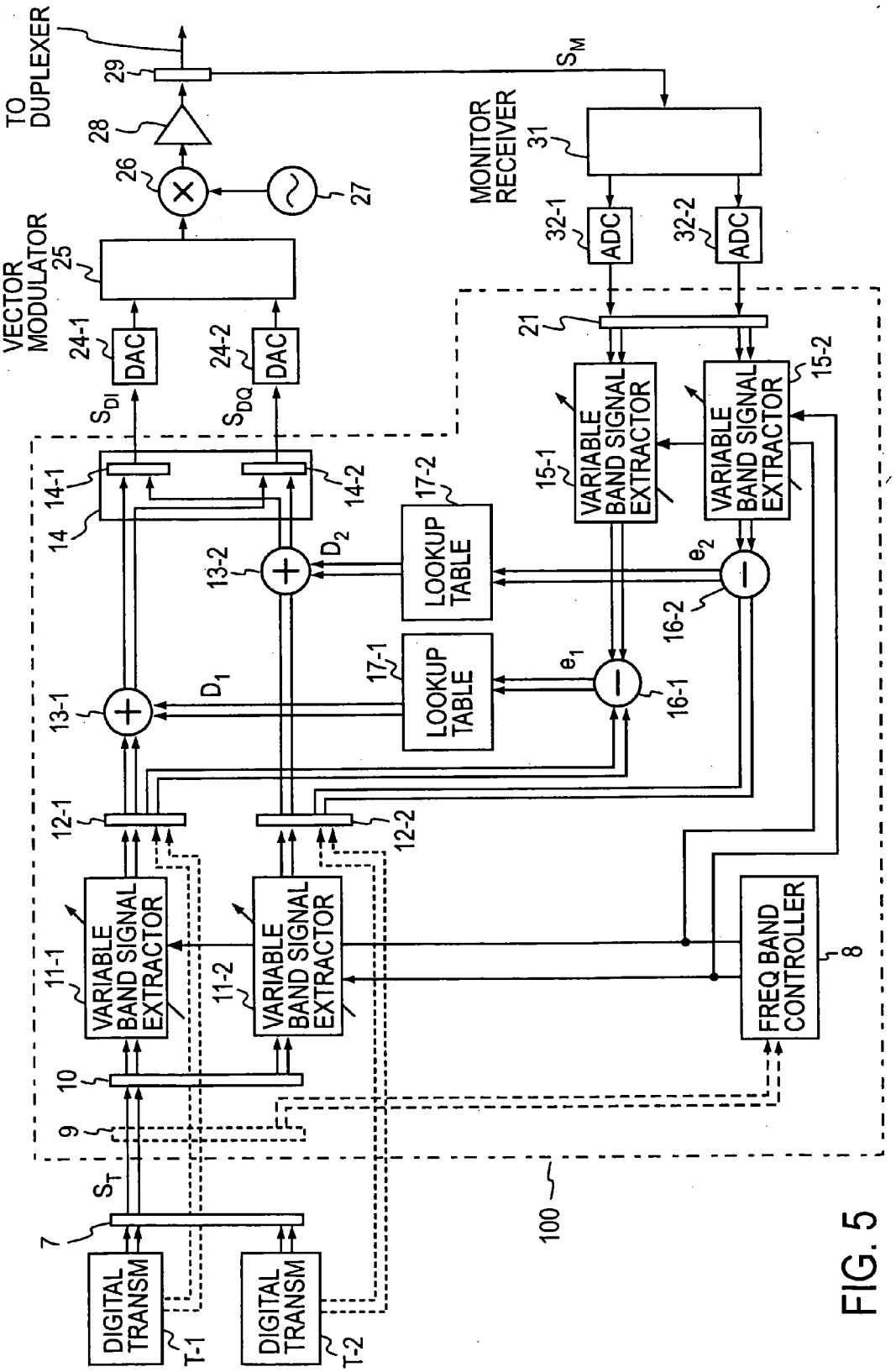
TO DUPLEXER
29
28
26
27
VECTOR MODULATOR
25
24-1
DAC
24-2
DAC
S_{DI}
S_{DQ}
14-1
14
14-2
13-1
13-2
D_1
D_2
12-1
12-2
11-1
VARIABLE BAND SIGNAL EXTRACTOR
11-2
VARIABLE BAND SIGNAL EXTRACTOR
10
9
S_T
7
DIGITAL TRANSM
T-1
DIGITAL TRANSM
T-2
17-1
LOOKUP TABLE
17-2
LOOKUP TABLE
16-1
16-2
e_1
e_2
15-1
VARIABLE BAND SIGNAL EXTRACTOR
15-2
VARIABLE BAND SIGNAL EXTRACTOR
21
32-1
ADC
32-2
ADC
MONITOR RECEIVER
31
S_M
FREQ BAND CONTROLLER
8
100

FIG. 5

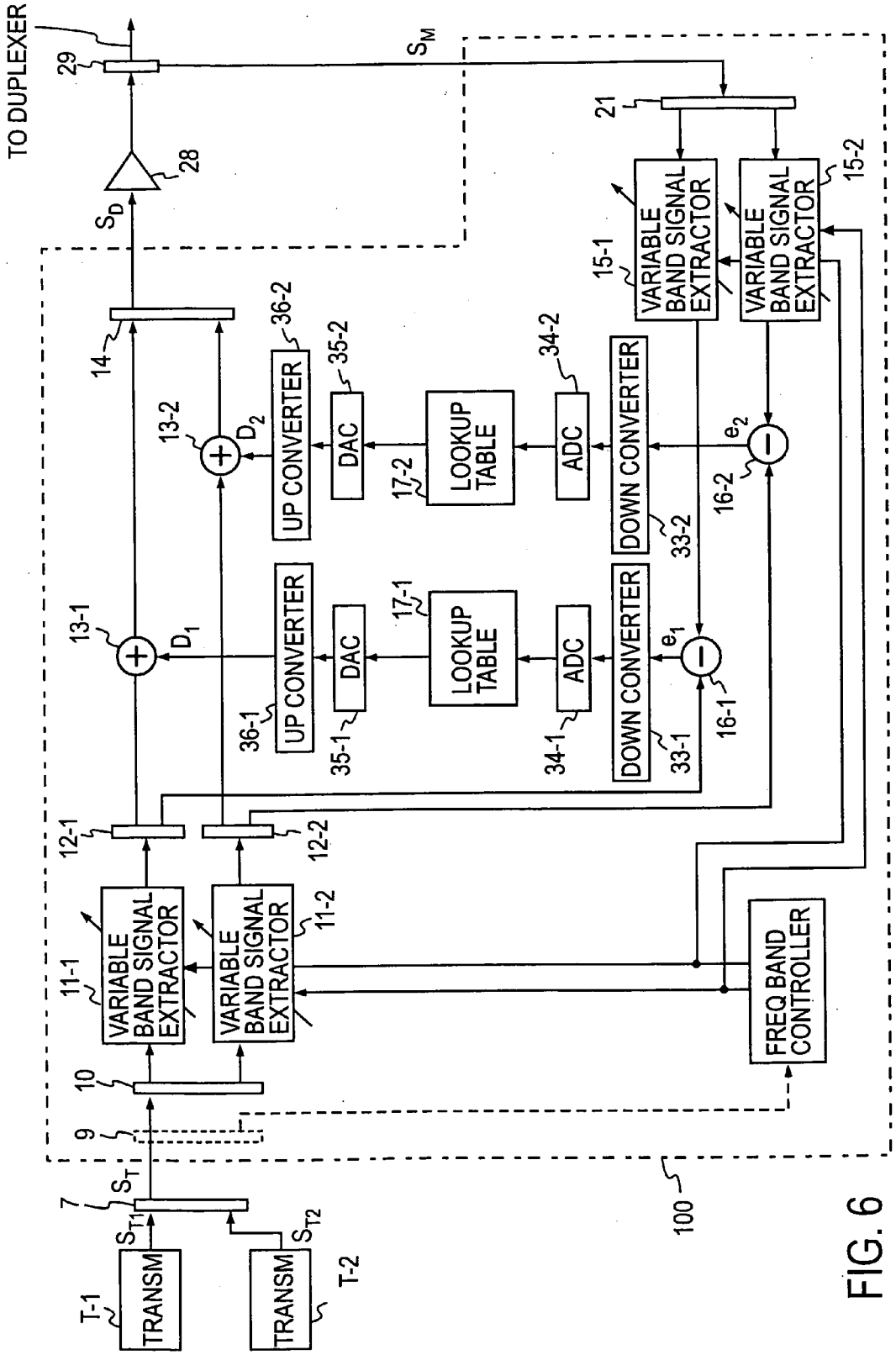
TO DUPLEXER
29
28
S_D
S_M
21
14
13-1
13-2
D_1
D_2
36-1
36-2
UP CONVERTER
UP CONVERTER
35-1
35-2
DAC
DAC
17-1
17-2
LOOKUP TABLE
LOOKUP TABLE
34-1
34-2
ADC
ADC
33-1
33-2
DOWN CONVERTER
DOWN CONVERTER
e_1
e_2
16-1
16-2
15-1
15-2
VARIABLE BAND SIGNAL EXTRACTOR
VARIABLE BAND SIGNAL EXTRACTOR
12-1
12-2
11-1
11-2
VARIABLE BAND SIGNAL EXTRACTOR
VARIABLE BAND SIGNAL EXTRACTOR
FREQ BAND CONTROLLER
10
9
7
S_T
S_{T1}
S_{T2}
T-1
T-2
TRANSM
TRANSM
100

FIG. 6

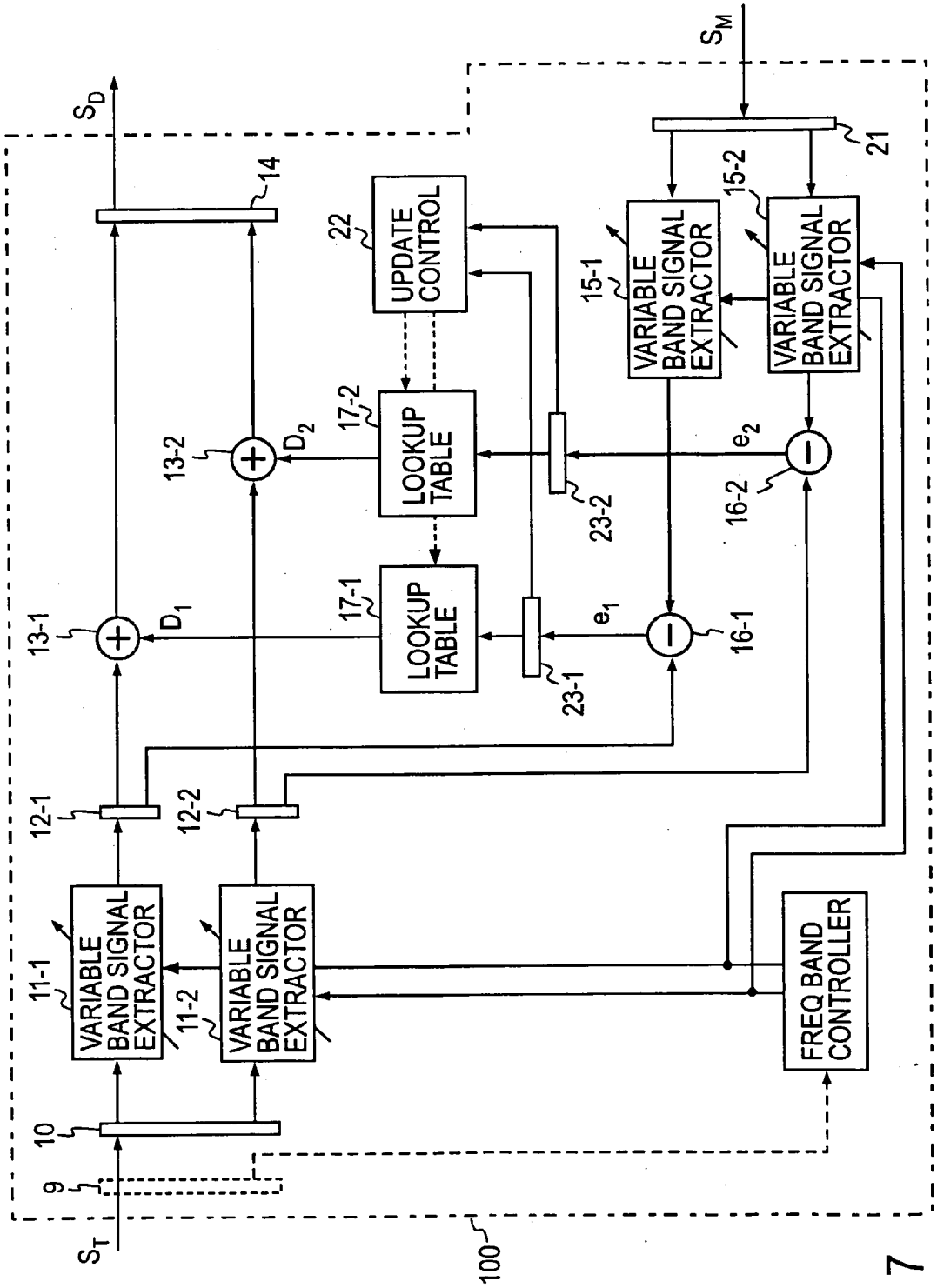
S_T
9
10
11-1
VARIABLE BAND SIGNAL EXTRACTOR
11-2
VARIABLE BAND SIGNAL EXTRACTOR
12-1
12-2
13-1
D_1
13-2
D_2
14
S_D
17-1
LOOKUP TABLE
17-2
LOOKUP TABLE
22
UPDATE CONTROL
23-1
23-2
e_1
e_2
16-1
16-2
15-1
VARIABLE BAND SIGNAL EXTRACTOR
15-2
VARIABLE BAND SIGNAL EXTRACTOR
21
S_M
FREQ BAND CONTROLLER
100

FIG. 7

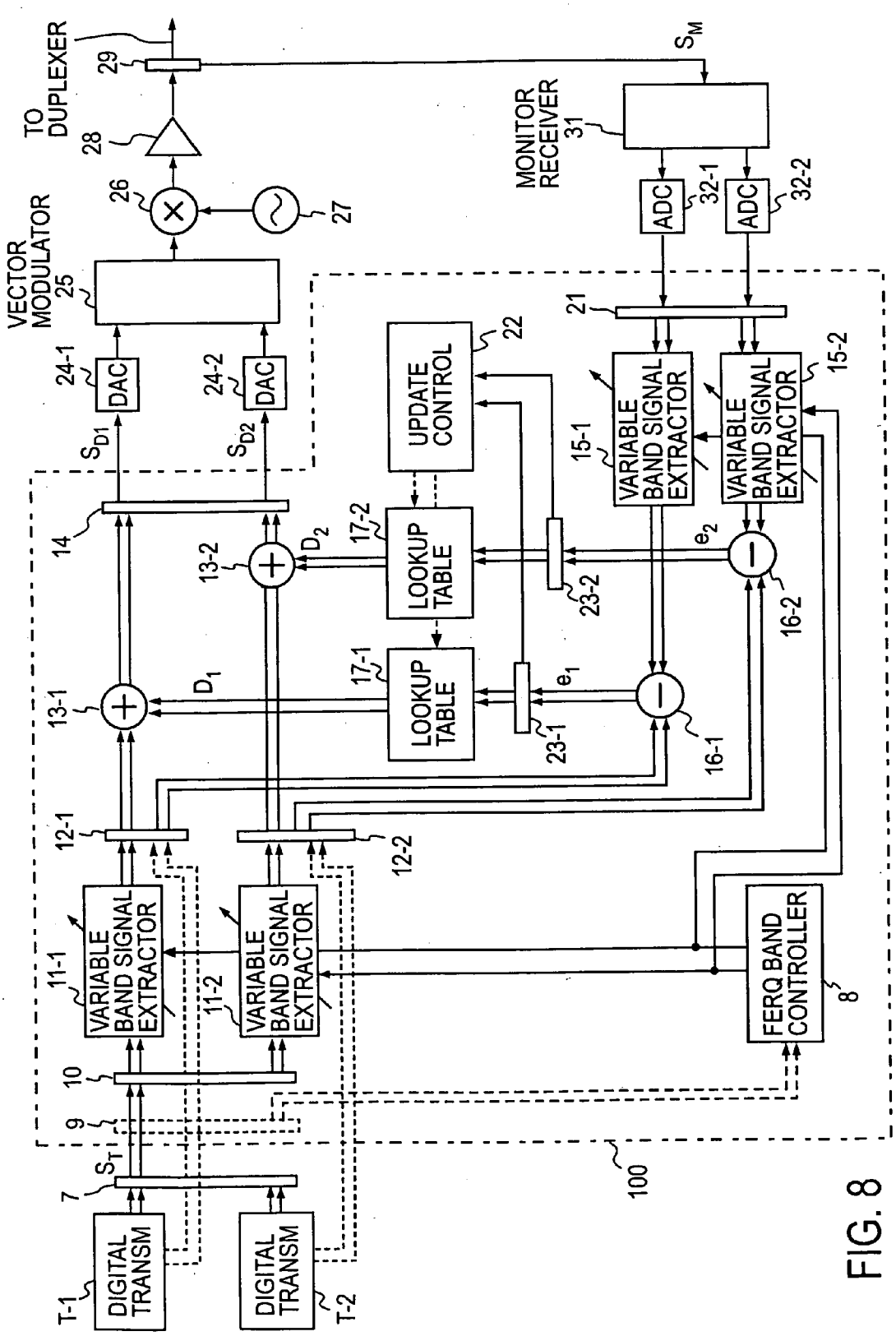
TO DUPLEXER
29
28
26
27
VECTOR MODULATOR
25
24-1
DAC
24-2
DAC
S_{D1}
S_{D2}
14
13-2
13-1
D_2
D_1
17-2
17-1
LOOKUP TABLE
LOOKUP TABLE
UPDATE CONTROL
22
23-2
23-1
e_2
e_1
16-2
16-1
15-1
VARIABLE BAND SIGNAL EXTRACTOR
VARIABLE BAND SIGNAL EXTRACTOR
15-2
21
ADC
ADC
32-1
32-2
MONITOR RECEIVER
31
S_M
12-1
12-2
11-1
VARIABLE BAND SIGNAL EXTRACTOR
11-2
VARIABLE BAND SIGNAL EXTRACTOR
FERQ BAND CONTROLLER
8
10
9
S_T
7
DIGITAL TRANSM
T-1
DIGITAL TRANSM
T-2
100

FIG. 8

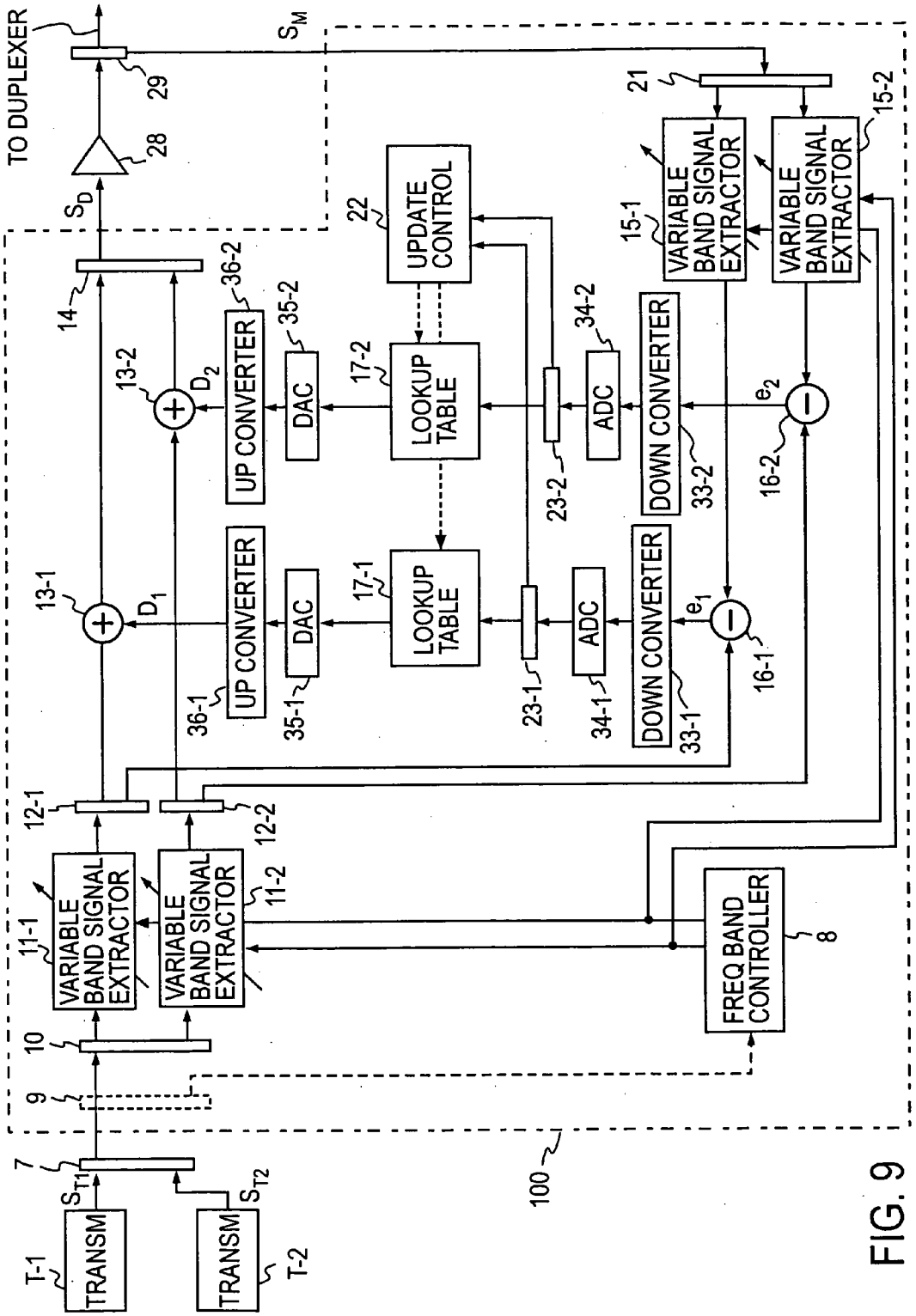
TO DUPLEXER
29
28
S_D
S_M
14
13-1
13-2
D_1
D_2
UP CONVERTER
36-1
36-2
DAC
35-1
35-2
LOOKUP TABLE
17-1
17-2
UPDATE CONTROL
22
ADC
34-1
34-2
23-1
23-2
DOWN CONVERTER
33-1
33-2
e_1
e_2
16-1
16-2
VARIABLE BAND SIGNAL EXTRACTOR
15-1
15-2
21
12-1
12-2
11-1
11-2
10
9
7
S_{T1}
S_{T2}
TRANSM
T-1
T-2
FREQ BAND CONTROLLER
8
100

FIG. 9

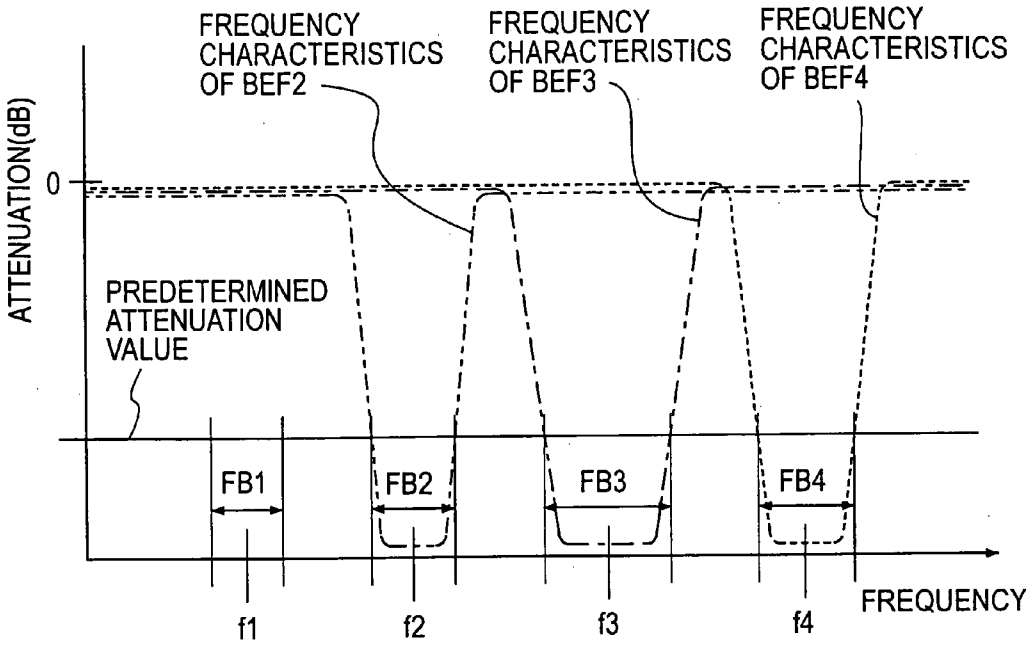
FREQUENCY CHARACTERISTICS OF BEF2
FREQUENCY CHARACTERISTICS OF BEF3
FREQUENCY CHARACTERISTICS OF BEF4
ATTENUATION(dB)
0
PREDETERMINED ATTENUATION VALUE
FB1
FB2
FB3
FB4
f1
f2
f3
f4
FREQUENCY

FIG. 10

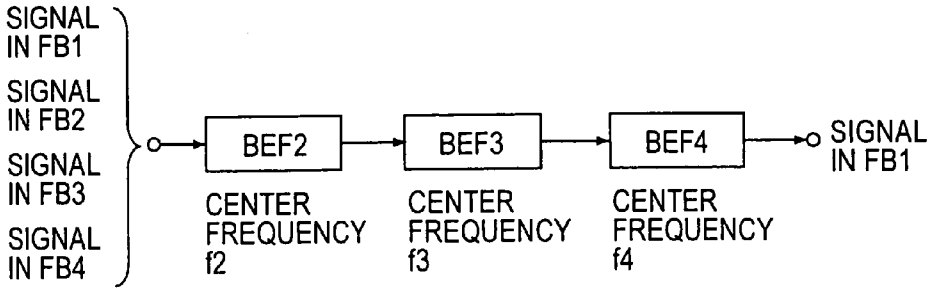
SIGNAL IN FB1
SIGNAL IN FB2
SIGNAL IN FB3
SIGNAL IN FB4
BEF2
BEF3
BEF4
SIGNAL IN FB1
CENTER FREQUENCY f2
CENTER FREQUENCY f3
CENTER FREQUENCY f4

FIG. 11

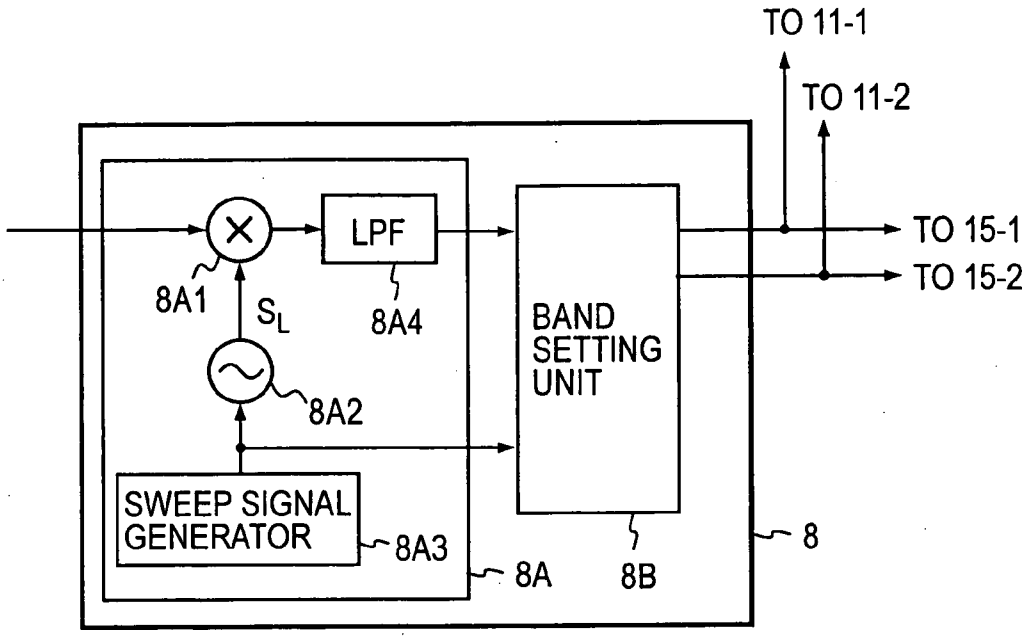
TO 11-1
TO 11-2
TO 15-1
TO 15-2
LPF
8A1
S_L
8A4
BAND
SETTING
UNIT
8A2
SWEEP SIGNAL
GENERATOR
8A3
8A
8B
8

FIG. 12

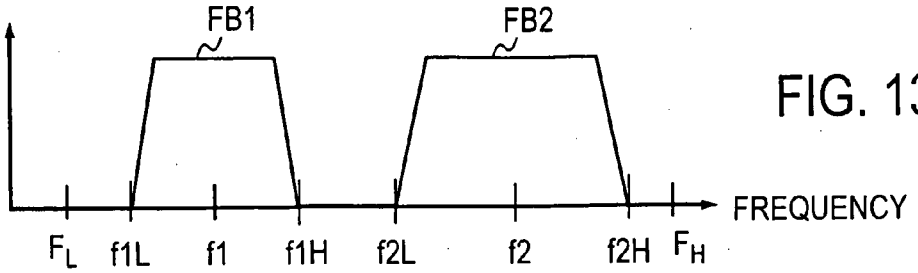

FIG. 13A

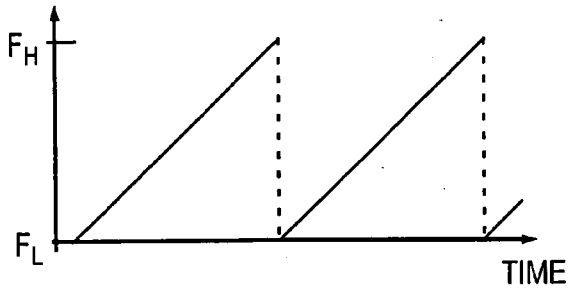

FIG. 13B

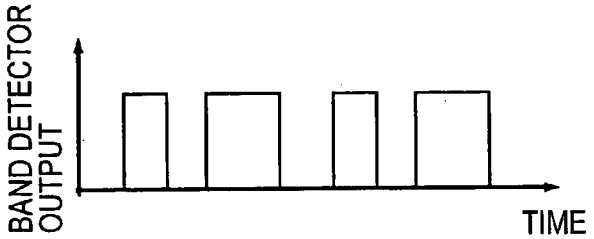

FIG. 13C

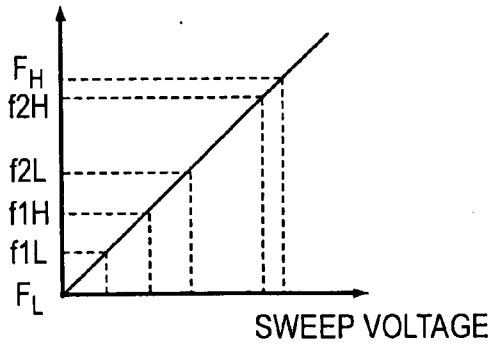

FIG. 13D

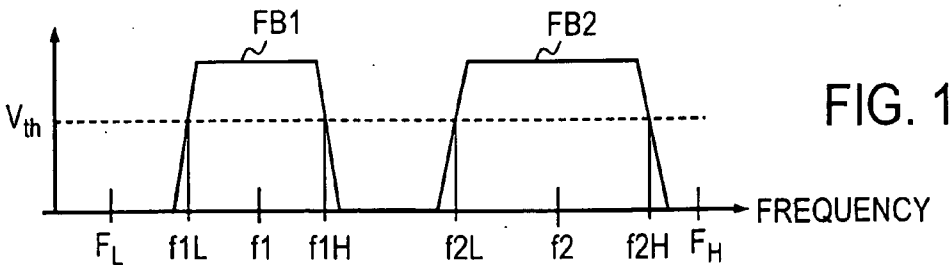

FIG. 13E

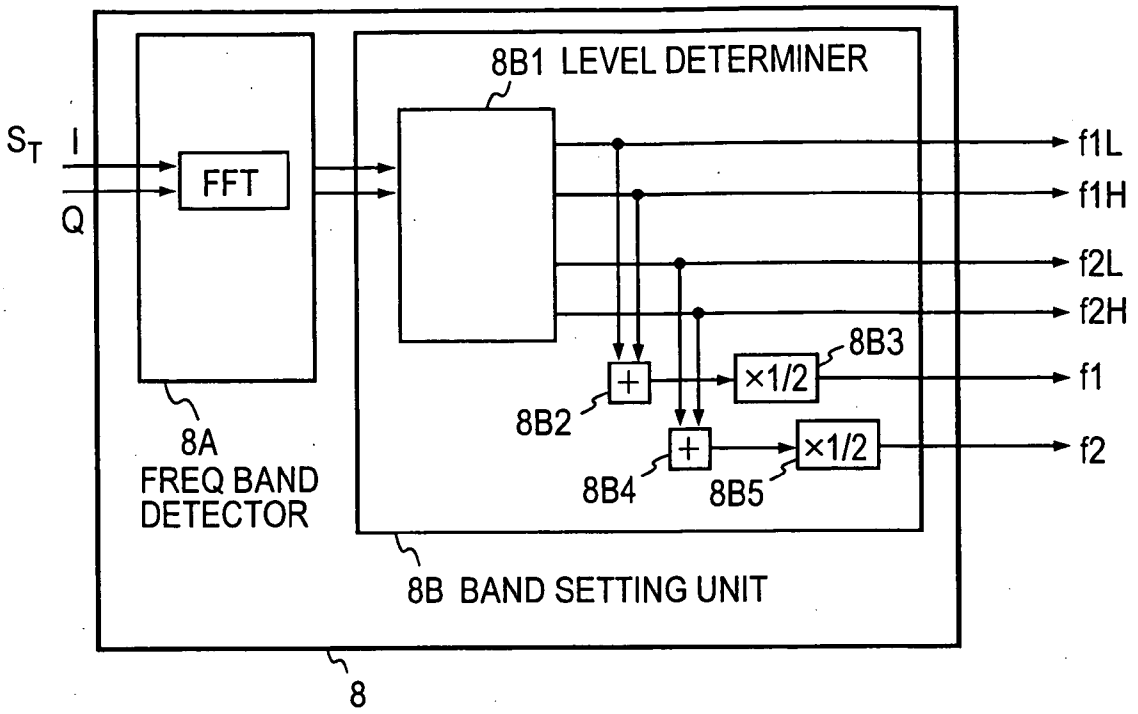
S_T
I
Q
FFT
8A
FREQ BAND
DETECTOR
8B1 LEVEL DETERMINER
8B2
8B3
×1/2
8B4
8B5
×1/2
8B BAND SETTING UNIT
8
f1L
f1H
f2L
f2H
f1
f2

FIG. 14

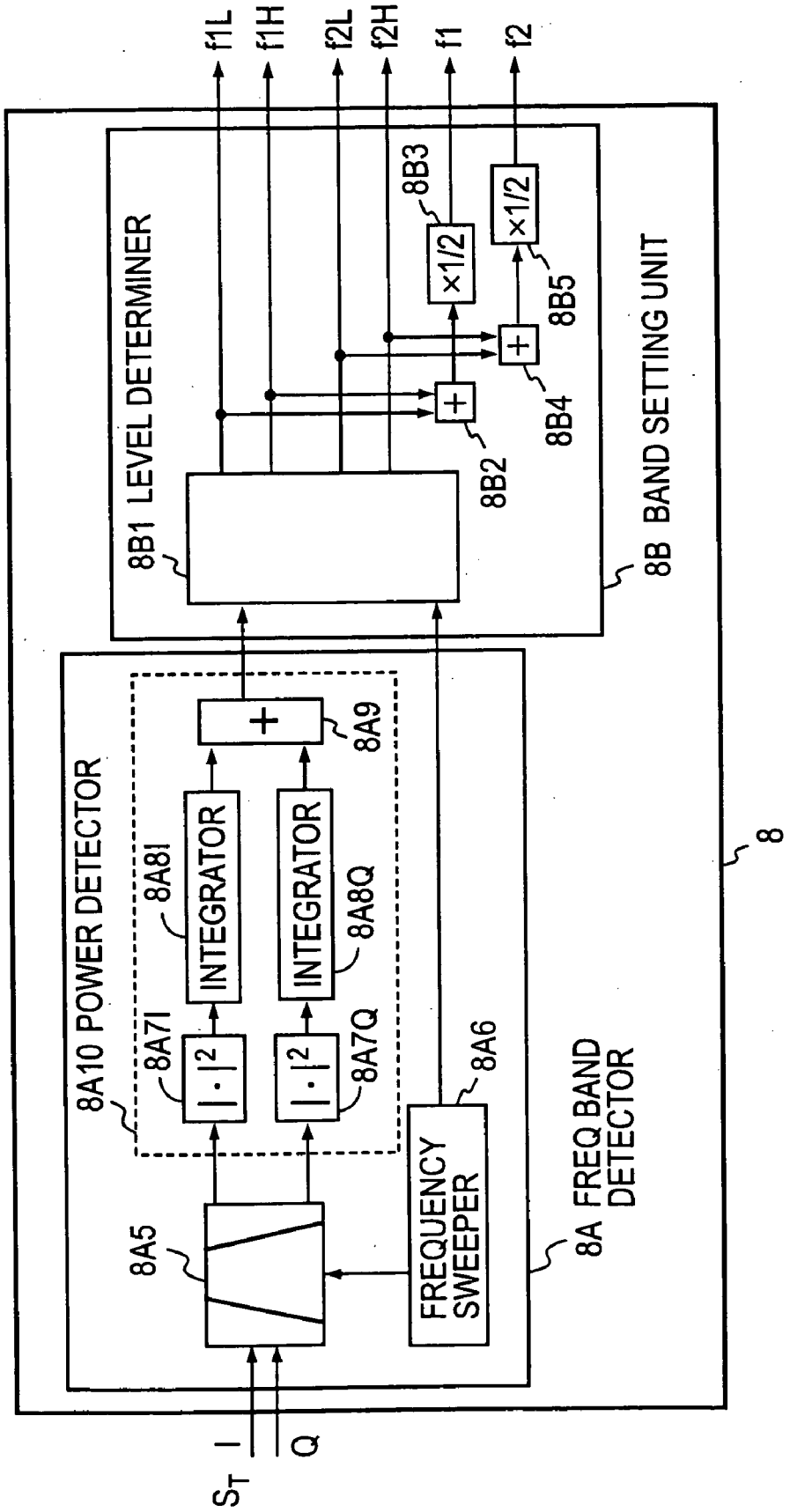
f1L
f1H
f2L
f2H
f1
f2
8B1 LEVEL DETERMINER
8B3
×1/2
×1/2
8B5
8B4
8B2
8B BAND SETTING UNIT
8A10 POWER DETECTOR
8A9
8A8I
INTEGRATOR
INTEGRATOR
8A8Q
8A7I
8A7Q
8A6
8A5
FREQUENCY SWEEPER
8A FREQ BAND DETECTOR
8
I
Q
S_T

FIG. 15

FIG. 16A

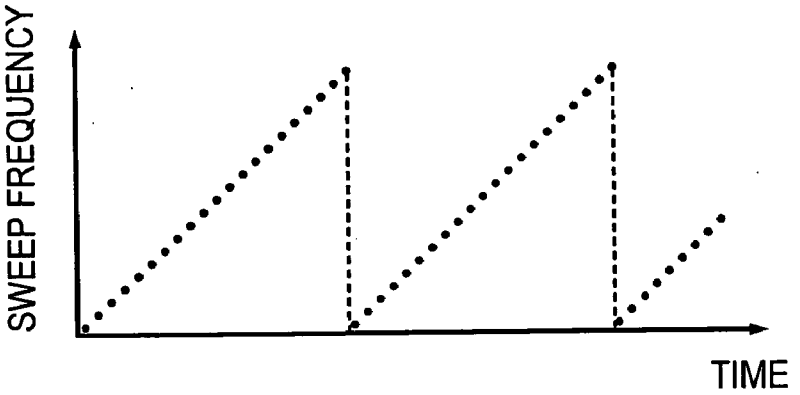

FIG. 16B

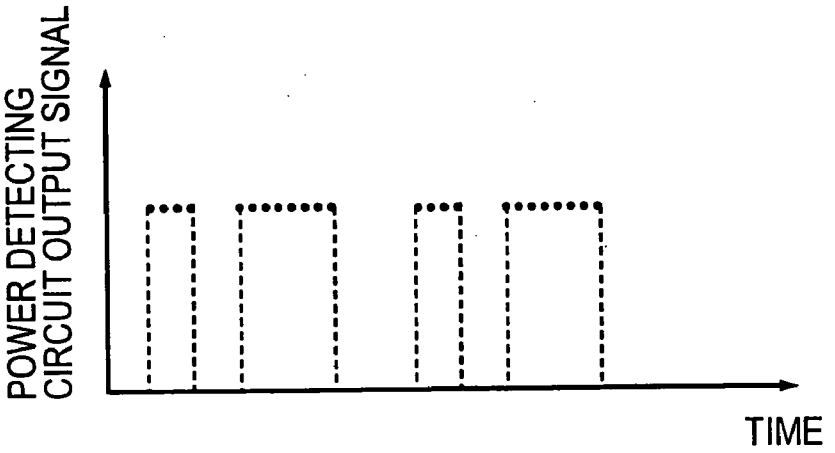

MULTI-BAND LOOKUP TABLE TYPE PREDISTORTER

TECHNICAL FIELD

[0001] The present invention relates to a predistorter that compensates for a distortion of a power amplifier for amplifying power of high frequency signals that changes in a plurality of frequency bands. More specifically, the present invention relates to a multi-band lookup table type predistorter for collectively amplifying high frequency signals of a plurality of bands.

BACKGROUND ART

[0002] The predistortion linearizer method based on digital signal processing (hereinafter referred to as a digital predistortion method) (for example, GB 2 335 812 A, hereinafter referred to as Patent literature 1) is known as one of the non-linear compensation method for a microwave power amplifier. The digital predistortion method is characteristic in that a complicate analog circuit is eliminated by implementing a predistorter using digital signal processing. A conventional linear amplifier such as a feed forward amplifier or a negative feedback amplifier is mainly realized by an analog circuit. The predistorter is also realized by an analog circuit (for example, H. Girard and K. Feher, "A new baseband linearizer for more efficient utilization of earth station amplifiers used for QPSK transmission", IEEE J. Select. Areas Commun. SAC-1, No. 1, 1983, hereinafter referred to as Non Patent literature 1, and Nojima and Okamoto, "Analysis and Compensation of TWT Nonlinearities Based on Complex Power Series Representation", the IEICE Transactions B, Vol. J64-B, No.12, December 1981, hereinafter referred to as Non Patent literature 2). The art of the analog linearization circuits, however, generally requires a highly accurate adjustment technique. The analog circuits need to be easily configured to be simple in order to make a transmitter including a modulator more compact and more cost effectiveness.

[0003] As a conventional digital predistorter, a configuration having a lookup table for linearizing non-linear characteristics of an amplifier has been known (for example, L. Sundstrom, M. Faulkner, and M. Johansson, "Quantization analysis and design of a digital predistortion linearizer for RF power amplifiers", IEEE Trans. Vech. Tech., Vol. 45, No.4, pp. 707-719, 1996. 11, hereinafter referred to as Non Patent literature 3). A lookup table type predistorter reads out distortion compensation data from a lookup table by using a difference signal between the input signal of the power amplifier and the output signal of the power amplifier and adds the distortion compensation data to the input signal of the power amplifier. If distortion component is completely compensated for in the output signal of the power amplifier, i.e., the output signal of the power amplifier has been linealized, the difference signal would become nothing. In the lookup table type predistorter, the lookup table is updated in stages so that an absolute value of the difference signal is nothing. In such a manner, the lookup table type predistorter can perform distortion compensation without previously recognizing non-linear characteristics of the power amplifier.

[0004] For the existing wireless systems, for example, PDC (Personal Digital Cellular), GSM (Global System for Mobile Communications), IMT-2000 (International Mobile Telecommunication 2000) have been operated. It is known that each wireless system allocates each frequency band. On the other hand, an art for realizing software defined radio so that a single hardware accommodates a plurality of wireless systems has been known. If a single hardware can accommodate a plurality of wireless systems, a user of the signle hardware can use a single mobile communication provided by a wireless system without being aware of a wireless system or a core network behind the wireless system. Such a single hardware corresponding to a plurality of wireless systems, however, has not been actually realized.

[0005] As the services provided by wireless systems differ for each area or for each operator, wireless systems required for the services will also be diversified. For that purpose, wireless systems suitable for respective objects need to be mixed in the same period of time and in the same place.

[0006] As a transmission method for using the plurality of wireless systems, a multi-band wireless system has been known. The wireless system makes use of one or more of frequency bands to be used according to a propagation environment or a traffic status variable in accommodative manner. A multi-band transmission by using an unused frequency band is effective to reserve predetermined quality or predetermined capacity of transmission. In a multi-band wireless system, the number of frequency bands used can be always changed depending on a transmission status to be secured in each wireless system. Similarly, a bandwidth can also be changed in the same band. If a frequency band used by a business entity is different from a frequency band used by anther business entity, the multi-band wireless system can improve efficiency of using a frequency by executing adaptive transmission control so as to use a free frequency band based on the technologies of interference recognition, frequency sharing, interference canceling, suppression of giving-interference, or multi-band controlling.

[0007] In the base station lookup table type predistorter accommodating such a multi-band wireless system, a frequency range to which distortion compensation is available requires generally more than three times transmission bandwidth centering on a carrier frequency. For example, a system for transmitting both signals in 800 MHz band and in 1.5 GHz band simultaneously, it is not possible to achieve predetermined distortion compensation while performing distortion compensation on the frequency band signals. Because it is known that the conventional look-up table type predistorter can operate less than 20-MHz bandwidth. Therefore, in order to transmit signals in a plurality of frequency bands, while executing distortion compensation by using a lookup table type predistorter, the transmitter needs to build a lookup table type predistorter for each frequency band and also prepare a vector modulator, a frequency converter and a power amplifier for each frequency band. That makes the entire device cumbersome, increases power consumption and overgrows a device.

[0008] If the transmitter can collectively execute a lookup table type predistortion processing on a plurality of frequency bands, it can simplify a device, suppress power consumption and downsize the device. When the transmitter is about to execute lookup table type distortion processing on a plurality of frequency bands by using a single lookup table under the condition that frequency bands are away

from each other by frequency separation more than a bandwidth between respective frequency bands such as 800 MHz and 1.5 GHz, a compensation parameter stored in the lookup table would be inaccurate to signals in both frequency bands simultaneously. Therefore, distortion components produced in both frequency bands cannot be appropriately compensated for.

[0009] In a multi-band wireless system with a plurality of transmission frequency bands, it can be assumed that a frequency band may be changed in consideration of a service state of the wireless system and interference or the like to the other wireless systems. When a frequency band in such a wireless system is being changed, a conventional lookup table type predistorter that has a fixed frequency band to execute distortion compensation cannot adaptively change even an operating frequency. The lookup table type predistorter used for a long time needs to execute lookup table type predistorter modification and change at each base station for changing a frequency band. That requires tremendous time and effort to readjust many lookup table type predistorters. Therefore, a lookup table type predistorter configuration for making a transmitter more cost effectiveness by eliminating the requirements mentioned above is needed now.

[0010] For example, the lookup table type predistorter, which can execute distortion compensation in the frequencies f1 and f2 simultaneously, cannot execute the distortion compensation in the frequencies f1 and f3 simultaneously when the frequency band for signals used is changed from f2 to f3. This is because that an operating frequency band for conventional lookup table type predistorter is fixed.

[0011] Conventional lookup table type predistorters cannot adaptively change a frequency band to be subject to distortion compensation and the bandwidth, when frequency bands of a wireless system are being changed. Conventionally, it is required to update or exchange a lookup table type predistorter for each of plural frequency bands.

SAMMARY OF THE INVENTION

[0012] The present invention intends to provide a lookup table type predistorter that can easily execute distortion compensation on a plurality of frequency bands.

[0013] According to the present invention, a multi-band lookup table type predistorter for adding predistortion components for canceling distortion components produced by a power amplifier to an input transmitting signal and outputting the result is adapted to include:

[0014] N output side variable band signal extractors for extracting output signals in N frequency bands from output signals from the power amplifier, wherein N is an integer of 2 or greater;

[0015] N difference detectors for detecting differences between transmitting signals in N frequency bands and N output signals from said N output side variable band signal extractors;

[0016] N lookup tables for reading distortion compensation data of corresponding N frequency bands by using differences of said N frequency bands as reference signals;

[0017] N adders for adding said distortion compensation data read out from said N lookup tables to the transmitting signals in the corresponding N frequency bands;

[0018] a combiner for combining the added outputs from said N adders and outputting the combined result as a transmitting signal with the predistortion; and

[0019] a frequency band controller for controlling frequency bands of said N output side variable band signal extractors.

BRIEF DESCRIPTION OF THE DRAWINGS

[0020] **FIG. 1** is a diagram showing the first embodiment of a multi-band lookup table type predistorter of the present invention;

[0021] **FIG. 2** is a diagram showing an example of frequency versus attenuating characteristics when a variable band signal extractor consists of variable band-pass filter;

[0022] **FIG. 3** is a diagram showing an example of a filter bank constructed of four filters;

[0023] **FIG. 4A** is a diagram showing an example of a frequency versus attenuating characteristics when a variable band signal extractor consists of a plurality of band-pass filters with different center frequencies;

[0024] **FIG. 4B** is a diagram showing an example of another frequency versus attenuating characteristics;

[0025] **FIG. 5** is a diagram showing the second embodiment of the present invention;

[0026] **FIG. 6** is a diagram showing the third embodiment of the present invention;

[0027] **FIG. 7** is a diagram showing the fourth embodiment of the present invention;

[0028] **FIG. 8** is a diagram showing the fifth embodiment of the present invention;

[0029] **FIG. 9** is a diagram showing the sixth embodiment of the present invention;

[0030] **FIG. 10** is a diagram showing a frequency versus attenuating characteristics of a band elimination filter;

[0031] **FIG. 11** is a diagram showing an example of extracting a frequency band from four frequency bands by using band elimination filters;

[0032] **FIG. 12** is a diagram showing a configuration of a frequency band controller for executing automatic control;

[0033] **FIG. 13A** is a schematic diagram showing an example of a spectrum of an input signal;

[0034] **FIG. 13B** is a diagram for illustrating a frequency sweep;

[0035] **FIG. 13C** is a diagram showing an example of detection output by a frequency band detector;

[0036] **FIG. 13D** is a diagram showing relationship between a sweep voltage and a sweep frequency;

[0037] **FIG. 13E** is a diagram for illustrating frequency band detection by a threshold;

[0038] **FIG. 14** is a diagram showing a configuration of a frequency band controller corresponding to a digital predistorter;

[0039] **FIG. 15** is a diagram showing another example of a configuration of a frequency band controller;

[0040] **FIG. 16A** is a diagram for illustrating a discrete frequency sweep; and

[0041] **FIG. 16B** is a diagram showing an output example of a power detector.

BEST MODES FOR CARRYING OUT THE INVENTION

[0042] Embodiments of the present invention will be described with reference to drawings. Like reference numerals are given to like components in the drawings, and repeated descriptions for them will be avoided.

First Embodiment

[0043] **FIG. 1** shows the first embodiment of a lookup table type predistorter that implements distortion compensation for a plurality of different frequency bands simultaneously. **FIG. 1** shows a case where the frequency of an input transmitting signal S_T to a predistorter **100** may be of an intermediate frequency or a wireless frequency. Those parts related to frequency conversion and demodulating and feeding back from a power amplifier, which are used when required, are omitted in the figure for simplicity. A digital-to-analog converter (hereinafter referred to as a DAC) and an analog-to-digital converter (hereinafter referred to as an ADC) with regard to input/output to/from lookup tables **17-1** and **17-2** usually consisting of a memory are also omitted.

[0044] The transmitting signal S_T is inputted from a transmitter (not shown) to a divider **10**. The divider **10** consists of a wide band directional coupler, for example. Although **FIG. 1** shows the case where the predistorter performs distortion compensation only on signals in dual frequency bands at the same time for simplicity, the predistorter can be adapted for signals in three or more frequency bands.

[0045] The input signal S_T including dual frequency bands of transmitting signals is divided into two input side variable band signal extractors **11-1** and **11-2** at the divider **10** and transmitting signals in dual frequency bands are extracted. It is assumed that a frequency band controller **8** sets the variable band signal extractor **11-1** to extract transmitting signal of 800 MHz band and the variable band signal extractor **11-2** to extract transmitting signal of 1.5 GMz band. One of the transmitting signals extracted in the dual frequency bands is divided to an adder **13-1** and a difference detector **16-1** at a divider **12-1**, and the other of the transmitting signals is divided to an adder **13-2** and a difference detector **16-2** at a divider **12-2**. One of the divided transmitting signals in each of the frequency bands is supplied through corresponding one of the adders **13-1** and **13-2** to the combiner **14** and combined with the other transmitting signal, and the combined signal is provided to a power amplifier (not shown) as an output signal SD of the predistorter **100**.

[0046] A part of an output of a power amplifier, which is to be subject to distortion compensation by the predistorter **100**, is fed back as a monitor signal S_M and divided into output side variable band signal extractors **15-1** and **15-2** by a divider **21**. The variable band signal extractors **15-1** and **15-2** extract signals in the same frequency bands as those of the variable band signal extractors **11-1** and **11-2**, respectively, and provide the extracted signals to the difference detectors **16-1** and **16-2**, respectively. The difference detectors **16-1** and **16-2** detect differences e_1 and e_2 between transmitting signals and the amplifier output signals (monitor signal S_M) in the corresponding frequency bands. Thus, distortion components produced by the power amplifier in the respective frequency bands are detected as the difference signals. By using the differences e_1 and e_2 detected in respective frequency bands, i.e., distortion components, as reference signals, corresponding distortion compensation data are read out from the lookup tables **17-1** and **17-2** and provided to the adders **13-1** and **13-2**, respectively. The distortion compensation data are such one for canceling the detected distortion components. The distortion compensation data, which are predetermined for the distortion components produced by a power amplifier at respective frequency bands, are stored in the lookup tables **17-1** and **17-2**.

[0047] The adders **13-1** and **13-2** add the distortion compensation data D_1 and D_2 to signals to be transmitted in frequency bands to perform distortion compensation (addition of predistortion). Since the distortion compensation is carried out for each frequency band, it is possible to achieve highly accurate distortion compensation in the plural frequency bands.

[0048] The transmitting signals added with distortion compensation data at the adders **13-1** and **13-2** are combined with each other at the combiner **14**, and the combined output is power-amplified by a power amplifier (not shown) or converted into a radio signal, and then amplified by a power amplifier and transmitted.

[0049] When the lookup table type predistorter according to the present invention is applied to mobile communication, frequency band signals extracted by the variable band signal extractors **11-1** and **11-2** are those in the 800 MHz band and the 1.5 GHz band, for example. The number of the frequency bands is not limited to two. If signals in the 2 GHz band and the 5 GHz band are also to be transmitted simultaneously, the number of the input side variable band signal extractors is four, and the numbers of the dividers, adders, difference detectors, lookup tables and output side variable band signal extractors are each four, too.

[0050] Characteristics of the variable band signal extractors **11-1** and **11-2** and the variable band signal extractors **15-1** and **15-2** can be materialized by band-pass filters, for example, with desired frequency bands and center frequencies of f1 and f2, respectively. **FIG. 2** schematically shows frequency versus attenuating characteristics of the variable band signal extractors **11-1** and **1.1-2** in a solid line and a dashed line, respectively, in the case each of the extractors is constructed of a variable band-pass filter. The horizontal axis indicates frequency and the vertical axis indicates attenuation (dB). The characteristics need to be that attenuation steeply increases outside the frequency bands of the center frequencies of f1 and f2, respectively, and a frequency difference between frequency bands is sufficiently large. Such characteristics can be usually obtained by connecting a plurality of band-pass filters in cascade. This is true for the variable band signal extractors **15-1** and **15-2**.

[0051] In the case where a filter is constructed of a microstrip line, for example, a center frequency can be made variable by switching the length of a resonator with such a switch as diode or MEMS switch. Whereas, the bandwidth of each of the variable band signal extractors **11-1**, **11-2**, **15-1** and **15-2** can be changed by switching a bank of the

filters of different center frequencies. **FIG. 3** shows an example of the variable band signal extractor **11-1** consisting of a bank of four band-pass filters.

[**0052**] An input transmitting signal S_T which can be in any one of a plurality of frequency bands is inputted from the divider **10** (**FIG. 1**) to a single-pole terminal of a single-pole four-throw switch **11**A. One end of each of the band-pass filters BPF**1** to BPF**4** is connected to corresponding one of four throw terminals of the single-pole four-throw switch **11**A. The other end of each of the band-pass filters BPF**1** to BPF**4** is connected to corresponding one of four throw terminals of a single-pole four-throw switch **11**B. A single terminal of the single-pole four-throw switch **11**B is connected to the divider **12-1** (**FIG. 1**).

[**0053**] Conduction/non-conduction of each contact of single-pole four-throw switches **11**A and **11**B is controlled by a common control signal from the band controller **8**. Supposing that the center frequency of BPF**2** is f**1**, the center frequency of BPF**1** is $f1-\Delta f_1$, the center frequency of BPF**3** is $f1+\Delta f_2$, and the center frequency of BPF**4** is $f1+\Delta f_3$, as shown in **FIG. 4A**. By adjoining frequency bands of a bank of filters one another and making desired one or more of the filters selectable, it is possible to compose a variable band signal extractor whose center frequency and the pass-bandwidth are variable.

[**0054**] A bold line in **FIG. 4A**, for example, shows a case where only a band-pass filter BPF**1** is selectively operated by single-pole four-throw switches **11**A and **11**B based on the control signal from the frequency band controller **8**. In **FIG. 4B**, a bandwidth and a center frequency are changed as indicated by a chain line when both of BPF**1** and BPF**2** are selectively operated at the same time. The variable band signal extractor that makes pass-bandwidth variable can be configured by using a bank of filters in this way.

[**0055**] The frequency band controller **8** controls the variable band signal extractor by control signals from an operation center or the like. Alternatively, as shown by a dashed line in **FIG. 1**, the frequency band controller **8** may detect a center frequency and a bandwidth of each frequency band from the input transmitting signal supplied from a divider **9** that is provided on the signal input side, and automatically control the variable band signal extractors **11-1**, **11-2**, **15-1**, and **15-2** based on the detected center frequency and bandwidth. That will be described in detail later.

Second Embodiment

[**0056**] **FIG. 5** shows the second embodiment of the present invention. The second embodiment shows a case where a lookup table type predistorter **100** in a dotted box is constructed of a digital circuit. In the embodiment, each signal line consists of two paths for the I signal and the Q signal. Digital base band signals in different frequency bands from digital transmitters T-1 and T-2 of dual frequency bands are combined at the combiner **7** and inputted to the divider **10** of the predistorter **100** as a transmitting signal S_T. The divider **10** distributes the transmitting signal S_T to two variable band signal extractors **11-1** and **11-2**. The divider **10** in a digital circuit may be merely a "wired OR circuit".

[**0057**] The frequency bands to be extracted by the variable band signal extractors **11-1** and **11-2** are determined based on control signals from the frequency band controller **8** as mentioned above.

[**0058**] Since the basic configuration of the lookup table type digital predistorter **100** is the same as that described in **FIG. 1**, the same reference numerals as those in **FIG. 1** are given to the corresponding parts and redundant description will be avoided. In this embodiment, the combiner **14** consists of an I signal combiner **14-1** for combining I signals from the adders **13-1** and **13-2** and outputting the combined signal as a predistorted transmitting signal S_{D1}, and a Q signal combiner **14-2** for combining Q signals from the adders **13-1** and **13-2** and outputting the combined signal as a predistorted transmitting signal S_{DQ}. The signals S_{D1} and S_{DQ} combined at the combiner **14** are converted into analog signals at the digital-to-analog converter (DACs) **24-1** and **24-2**, respectively, and provided to a vector modulator **25**. The vector modulator **25** produces vector modulated signals based on the two analog signals and provides the vector modulated signals to a frequency converter **26**. The vector modulated signal is frequency-converted into a transmission signal of a radio frequency band by a carrier signal from a local oscillator **27** and power amplified at the power amplifier **28** and supplied to an antenna (not shown) via a duplexer (not shown).

[**0059**] A directional coupler **29** is provided at the output side of the power amplifier **28**. The directional coupler **29** branches a part of the transmitting signal as a monitor signal S_M. The signal S_M is demodulated at a monitor receiver **31** to obtain analog I signal and analog Q signal, which are converted into a digital I signal and a digital Q signal by analog-to-digital converters (ADCs) **32-1** and **32-2**. The digital I signal and the digital Q signal are divided to the variable band signal extractors **15-1** and **15-2** by the divider **21** in the predistorter **100**, and an I signal and a Q signal in the respective frequency bands are extracted. Differences between the I signal and the Q signal in the frequency bands and the I signal and the Q signal in the corresponding frequency bands from the dividers **12-1** and **12-2** are taken at the difference detectors **16-1** and **16-2** to produce difference signals e_1 and e_2. The difference signals e_1 and e_2 are used as reference signals for reading compensation data D_1 and D_2 from the lookup tables **17-1** and **17-2**.

[**0060**] With the configuration mentioned above, predistortion linearization is previously produced at the multi-band lookup table type digital predistorter and added to the transmitting signal so that the predistorter cancels intermodulation distortion components produced by non-linear characteristics of the power amplifier **28** when a transmitting signal is amplified at the power amplifier **28**. Accordingly, it is possible to compensate for distortion components generated in the amplification by the power amplifier.

[**0061**] Input/output characteristics of the power amplifier **28** may be measured and in each frequency in advance and written as the distortion compensation data in the lookup tables **17-1** and **17-2**, or a default value may be written and updated so as to lessen absolute values of difference signals e_1 and e_2. Since the intermodulation distortion components produced at the power amplifier **28** by input signals in a plurality of frequency bands has frequency intervals wide enough compared to a bandwidth of each frequency band of the power amplifier **28**, a duplexer or a band-pass filter at the output side of the power amplifier **28** can easily remove the intermodulation distortion components.

[**0062**] Also in the embodiment in **FIG. 5**, the frequency band controller **8** may automatically control the variable

band signal extractors **11-1**, **11-2**, **15-1** and **15-2** based on the input digital transmitting signal S_T provided from the divider **9** as shown in dashed lines. A specific configuration of the frequency band controller **8** for such a case will be described later.

Third Embodiment

[0063] **FIG. 6** shows the third embodiment where the present invention is configured by an analog circuit. Since the lookup tables **17-1** and **17-2** are implemented through digital signal processing, the reference signals e_1 and e_2 are converted from high frequency signals to base band signals by down-converters **33-1** and **33-2** and then converted to digital signals at the ADCs **34-1** and **34-2**. The distortion compensation data D_1 and D_2 read out from the lookup tables **17-1** and **17-2** are converted into analog signals at the DACs **35-1** and **35-2**, further converted into high frequency signals at the up-converters **36-1** and **36-2** and provided to the adders **13-1** and **13-2**. The arrangements other than the distortion compensation data D_1 and D_2 are basically the same as those shown in **FIG. 1**. Here, an output from the predistorter **100** is power amplified at the power amplifier **28** and the power amplified output is provided to a duplexer (not shown) connected to an antenna (not shown). A directional coupler **29** is provided at an output side of the power amplifier **28**. A part of the transmitting signal is branched as a monitor signal S_M at the directional coupler **29** and provided to a divider **21** in the analog predistorter **100**, where the monitor signal S_M is provided to the variable band signal extractors **15-1** and **15-2**, and respective frequency bands are detected.

[0064] As such, the present invention can also consist of an analog circuit.

Fourth Embodiment

[0065] **FIG. 7** shows the fourth embodiment of the present invention. The embodiment is such one obtained by adding updating functions of the lookup tables **17-1** and **17-2** to the embodiment shown in **FIG. 1**. In this embodiment, the dividers **23-1** and **23-2** are inserted at the output sides of the difference detectors **16-1** and **16-2** to provide divided difference signals e_1 and e_2 to an update controller **22**, and the lookup tables **17-1** and **17-2** are updated based on the difference signals.

[0066] The update controller **22** controls updating of coefficients, which are compensation data in the lookup tables **17-1** and **17-2**, so as to minimize absolute values of difference signals e_1 and e_2.

[0067] As the first updating method, in the predistorter **100** for executing distortion compensation on N frequency bands at the same time, the updating of the lookup table by the update controller **22** is controlled by expressions below, where a reference signal of the ith frequency band at time t is represented by $e_i(t)$, a coefficient matrix of the ith frequency band lookup table **17-*i*** is represented by $w_i(t)$.

$$W(t)=(w_1(t) \ldots w_N(t)) \quad (1)$$

$$E(t)=(e_1(t) \ldots e_N(t)) \quad (2)$$

$$W(t+1)=W(t)+\mu(t)E(t) \quad (3),$$

where $\mu(t)$ is a forgetting coefficient matrix represented by the expression below.

$$\mu(t)=(\mu_1(t) \ldots \mu_N(t)) \quad (4)$$

Each forgetting coefficient is a predetermined value less than 0 and larger than −1. The equation (3) is an updating algorithm stored in the update controller **22**. The update controller **22** updates coefficients of the lookup table so as to minimize an absolute value of the reference signal matrix E(t). That is to say, in this example, the update controller **22** minimizes the absolute value of the reference signal matrix E(t) by updating coefficients of all the lookup tables instead of minimizing the reference signal $e_i(t)$ by updating a coefficient of each frequency band lookup table **17-*i***. The forgetting coefficient matrix is obtained under the condition of minimizing an absolute value of the reference signal matrix. That enables distortion compensation of N frequency bands to be executed at the same time. The equation (3) does not update a coefficient of each lookup table.

[0068] As the second updating method, a controlling method for minimizing reference signals inputted in each frequency band lookup table. The controller **22** sets a forgetting coefficient $\mu(t)$ to a fixed value μ as shown in the equation (5) below.

$$W(t+1)=W(t)+\mu E(t) \quad (5)$$

According to the equation (5), a coefficient of each frequency band lookup table is independently controlled so as to minimize each reference signal. The equation (5) may update coefficients of a plurality of lookup tables at the same time. Similarly, the equation (5) may be updated in order. In such a case, the number of coefficients of the lookup table to be controlled at the same time is 1.

Fifth Embodiment

[0069] **FIG. 8** shows the fifth embodiment. The fifth embodiment is such one obtainable by adding updating functions of the lookup tables **17-1** and **17-2** to the embodiment shown in **FIG. 5**. In this embodiment, dividers **23-1** and **23-2** and an update controller **22** are added as in the case of the embodiment shown in **FIG. 7**.

[0070] In this embodiment, a part of the output from the power amplifier **28** is branched as a monitor signal S_M from a directional coupler **29**, and the monitor signals S_M is down-converted at a monitor receiver **31** to produce baseband signals, which are converted to digital baseband signals by the ADCs **32-1** and **32-2**. The difference detectors **16-1** and **16-2** obtain the differences between digital baseband signals and signals provided by the dividers **12-1** and **12-2** as reference signals e_1 and e_2. The update controller **22** updates coefficients of the lookup tables **17-1** and **17-2** by control signals based on the reference signals e_1 and e_2 and also read distortion compensation data from the lookup tables **17-1** and **17-2**. This series of signal processing is performed for each transmission frequency band. In this manner, it is possible to perform distortion compensation on the transmitting signals of a plurality of frequency bands, independently.

[0071] The update controller **22** instructs two lookup tables **17-1** and **17-2** to update coefficients so as to minimize the sum of absolute values of the reference signals e_1 and e_2 in dual frequency bands. Alternatively, an instruction to each of the lookup tables **17-1** and **17-2** to update coefficients may

be done with a coefficient that minimizes an absolute value of each of the reference signals e_1 and e_2.

[0072] Initial coefficients of lookup tables **17-1** and **17-2** are obtained previously by measuring input/output characteristics of the power amplifier **28** for each frequency band. The update of coefficients in the frequency bands lookup tables **17-1** and **17-2** for each frequency band is repeated until a predetermined distortion suppression amount is reached for each frequency band. By repeating the process, it is possible to adaptively improve distortion suppression amount for each frequency band.

Sixth Embodiment

[0073] **FIG. 9** shows the sixth embodiment. The sixth embodiment is such one obtained by adding updating functions of the lookup tables **17-1** and **17-2** to the embodiment of the analog distorter shown in **FIG. 6**. In this embodiment, the dividers **23-1** and **23-2** and an update controller **22** are provided as in the embodiment shown in **FIG. 7**. Update operation of the lookup tables **17-1** and **17-2** by the update controller **22** is the same as that shown in **FIG. 8**, therefore, the description for the operation will be omitted.

Seventh Embodiment

[0074] The variable band signal extractors **11-1**, **11-2**, **15-1** and **15-2** have been described only in examples consisting of band-pass filters as shown in **FIGS. 2 and 4**. Such a variable band signal extractor constructed of band-pass filters has an advantage that the peripheral frequency band around the center frequency can be easily extracted and that isolation from the center frequency can be attained relatively easily. However, because the center frequency is a resonant frequency of a band-pass filter, the signals delay becomes longer.

[0075] As a result, a delay of each frequency band signals extracted from the monitor signals by the variable band signal extractors **15-1** and **15-2** relative to the difference signals from the dividers **12-1** and **12-2** provided to the difference detectors **16-1** and **16-2** becomes longer, causing a problem that the length of lines from the dividers **12-1** and **12-2** to the difference detectors **16-1** and **16-2** needs to be longer according to the delayed amount and that an attenuation of signals increases. Then, it is considered that each of BPF**1** to BPF**4** of the variable band signal extractor shown in **FIG. 3** can be constructed of band elimination filters (hereinafter, may be referred to as BEFs). If each BPF is constructed of band elimination filters, a frequency band to be extracted is not on the center frequency of the band elimination filters, so that the amount of delay of the frequency band signal caused by the BEFs is considerably small. Therefore, the embodiment is advantageous in that it can make the length of delay lines from the dividers **12-1** and **12-2** to the difference detectors **16-1** and **16-2** shorter and achieve low-loss. Further, band elimination filters can be designed easily.

[0076] **FIGS. 10 and 11** show examples of extracting a frequency band from, for example, four frequency bands by a combination of a plurality of band elimination filters. **FIG. 10** shows frequency versus attenuation characteristics. Explanation will be given of BEF**3** shown by a chain line for an example. Elimination center frequency of BEF**3** is f**3**. The attenuation of a certain bandwidth centering on f**3** is large. **FIG. 11** shows an example of extracting a frequency band by connecting three band elimination filters in cascade.

[0077] In the case of extracting a signal in the frequency band FB**1**, three filters of BEF**2** whose elimination center frequency is f**2**, BEF**3** whose elimination center frequency is f**3**, and BEF**4** whose elimination center frequency is f**4** are connected in cascade as shown in **FIG. 11**, allowing passage there through of a signal in the frequency band FB**1**. Similarly, in the case of extracting a signal in the frequency band FB**2**, it is only needed to serially connect band elimination filters (not shown) whose elimination frequency bands are f**1**, f**3** and f**4**. It is also possible to construct such that N−1 band elimination filters are serially connected to form each of BPF**1** to BPF**4** illustrated in **FIG. 3**.

Eighth Embodiment

[0078] **FIG. 12** shows an exemplary configuration of a frequency band controller **8** for automatically controlling the variable band signal extractors **11-1**, **11-2**, **15-1** and **15-2** in the embodiment of each analog predistorter shown in **FIGS. 1, 6, 7** and **9**. The frequency band controller **8** of the embodiment consists of a frequency band detector **8**A and a frequency band setting unit **8**B. The frequency band detector **8**A consists of a mixer **8A1**, a local oscillator **8A2**, a sweep signal generator **8A3** and a low-pass filter (referred to as an LPF) **8A4**.

[0079] The input transmitting signal S_T of the predistorter **100** is branched to the mixer **8A1** of the band controller **8** by the divider **9** of each of the abovementioned embodiments. The transmitting signal S_T is assumed to include signals in dual frequency bands FB**1** and FB**2** whose center frequencies are f**1** and f**2** as shown in **FIG. 13A**, for example. The lower limit frequency of the frequency band FB**1** is f**1**L and the upper limit frequency is f**1**H. The lower limit frequency of the frequency band FB**2** is f**2**L and the upper limit frequency is f**2**H. The local oscillator **8A2** is a voltage controlled oscillator, for example, and generates a local oscillation signal S_L whose frequency is swept by a sweep signal V_S from the sweep signal generator **8A3**, whose voltage changes in a shape. The frequency sweep keeps repeatedly sweeping in succession from a predetermined lower limit sweep frequency F_L lower than the two frequency bands FB**1** and FB**2** shown in **FIG. 13A** to a predetermined upper limit sweep frequency F_H higher than the two frequency bands, for example (see **FIG. 13B**).

[0080] The mixer **8A1** multiplies the local signal S_L from the local oscillator **8A2** by the input signal S_T. The components around a direct current are extracted by LPF **8A4** from the output of the mixer **8A 1** and provides the direct current components to the frequency band setting unit **8**B as an output from the band detector **8**A. The direct current components are outputted from the LPF **8A4** during intervals where the frequency components of the input signal S_T and a sweep frequency of the local oscillation signal S_L match, as shown in **FIG. 13C**. Relationship between the sweep signal voltage V_S and the sweep frequency is previously measured as shown in **FIG. 13D**. The band setting unit **8**B detects the lower limit frequency f**1**L and the upper limit frequency f**1**H of the frequency band FB**1** and the lower limit frequency f**2**L and the upper limit frequency f**2**H of the frequency band FB**2** by using the sweep signal voltage V_S and band detecting signals from the LPF **8A4**. The center frequency of each frequency band is obtained by f**1**=(f**1**L+f**1**H)/2 and f**2**=(f**2**L+f**2**H)/2.

[0081] Specifically, the band setting unit **8**B determines sweep frequencies at which the threshold V_{th} matches the rise and fall of direct current component voltages outputted from the LPF **8**A**4** as the local oscillation frequency is swept as shown in **FIG. 13E**. As it is apparent from **FIG. 13E**, bandwidths of the frequency bands FB**1** and FB**2** obtained from f**1**L, f**1**H, f**2**L and f**2**H that are determined from the threshold are narrower than the actual bandwidths. However, it is possible to accurately determine the lower limit frequencies and the upper limit frequencies by multiplying the detected f**1**L, f**1**H, f**2**L and f**2**H by a predetermined coefficient, respectively, for example.

[0082] The band setting unit **8**B sets the center frequency f**1**, the lower limit frequency f**1**L and the upper limit frequency f**1**H of the frequency band FB**1** determined in this manner to the variable band signal extractors **11-1** and **15-1**, and sets the center frequency f**2**, the lower limit frequency f**2**L and the upper limit frequency f**2**H of the frequency band FB**2** to the variable band signal extractors **11-2** and **15-2**. For the variable band signal extractors shown in **FIG. 3**, for example, a set of band-pass filters to be selected from the band-pass filters BPF**1** to BPF**4** are designated based on the determined center frequency, the lower limit frequency and the upper limit frequency.

[0083] If the frequency of the input signal S_T of the lookup table type predistorter **100** is dynamically changed, i.e., if the frequency of the signal inputted into the power amplifier is dynamically changed, the frequency band controller **8** needs to control the variable band signal extractors according to the dynamically changed frequency. The time period for changing the frequency is determined by the frequency sweep time of the local oscillator **8**A**2**. That is to say, the time period is determined by the time for one cycle of frequency sweep. In the example of **FIG. 12**, the embodiment can increase a detecting speed of the frequency band detector **8**A by speeding up the frequency sweep of the local oscillator **8**A**2**. Even if the frequency sweep is speeded up, efficiency of frequency band detection would not be lowered.

[0084] The voltage controlled oscillator that can sweep the oscillation frequency may be such one used for a general signal generator. The low-pass filter **8**A**4** can be realized by an LC filter or an active filter using an operational amplifier. The frequency band setting unit **8**B can be realized by an analog digital converter that digitizes direct current components and a microprocessor. Although the frequency band controller **8** shown in **FIG. 12** is premised on an analog predistorter, the frequency band controller **8** can also be realized by the same functional configuration with a digital predistorter.

[0085] The frequency band information can be obtained from the input signal by using the frequency band controller **8** of **FIG. 12** employed in the lookup table type predistorter of a transmitter installed in the mobile communication base station, for example, without needing to obtain information on a frequency band from a modem. Therefore, the lookup table type predistorter can solely set a frequency band for a variable band signal extractor. Accordingly, the embodiment can simplify a control system. In the case where a modulator is installed in a relaying device at a foot of an antenna tower and a power amplifier including the lookup table type predistorter is installed in a device at the top of the tower directly under the antenna that is distant from the relaying device, there is no need to exchange information on an operational frequency between the modulator and the power amplifier. That enables to perform maintenance and adjustment on each device, independently.

Ninth Embodiment

[0086] **FIG. 14** shows a configuration of the band controller **8** for automatically controlling the variable band signal extractors **11-1**, **11-2**, **15-1** and **15-2** in each embodiment of the digital predistorter configuration shown in **FIGS. 5 and 8**. The band controller **8** of the embodiment detects a transmitting signal frequency band included in the base band input signal S_T(I signal and Q signal) provided from the divider **9**.

[0087] The frequency band controller **8** consists of the frequency band detector **8**A and the band setting unit **8**B. The frequency band detector **8**A consists of a fast Fourier transform unit (FFT). The band setting unit **8**B consists of level determiner **8**B**1**, adders **8**B**2** and **8**B**4** and ½ multipliers **8**B**3** and **8**B**5**.

[0088] The frequency components of the input signal S_T are detected by the FFT which converts the input signal S_T divided by the divider **9** from a time domain to a frequency domain. The level determiner **8**B**1** compares the frequency components detected by the FFT with a threshold V_{th} preset as in the case of **FIG. 13E**, and detects frequencies at which levels of the frequency components match the threshold as the lower limit frequency f**1**L and the upper limit frequency f**1**H of the frequency band FB**1** and the lower limit frequency f**2**L and the upper limit frequency f**2**H of the frequency band FB**2**, respectively. The adder **8**B**2** calculates the sum of f**1**L and f**1**H, and the ½ multiplier **8**B**3** multiplies the sum by ½. The result of the multiplication is determined as a center frequency f**1** of the frequency band FB**1**. Similarly, the adder **8**B**4** calculates the sum of f**2**L and f**2**H, and the ½ multiplier **8**B**5** multiplies the sum by ½. The result of the multiplication is determined as a center frequency f**2** of the frequency band FB**2**. With f**1**, f**1**L, f**1**H, f**2**, f**2**L and f**2**H determined in this manner, each center frequency and each frequency band of the variable band signal extractors **11-1**, **11-2**, **15-1** and **15-2** are set.

[0089] Commercialized ICs can be used as an FFT. The frequency band detector **8**A can be realized by using a DSP (Digital Signal Processor) or an FPGA (Field Programmable Gate Array) instead of the FFT. The level determiner **8**B**1** can consist of a comparator. The frequency band detector **8**A and the band setting unit **8**B can be constructed of such simple circuits. It is possible to calculate the lower limit frequency, the upper limit frequency and the center frequency by mathematical operations with a DSP for the band setting unit **8**B.

Tenth Embodiment

[0090] **FIG. 15** shows another example of the frequency band controller **8** in the embodiments shown in **FIGS. 5 and 8**. In the embodiment, the band detector **8**A consists of a variable filter **8**A**5**, a frequency sweeper **8**A**6**, multipliers **8**A**7**I and **8**A**7**Q, integrators **8**A**8**I and **8**A**8**Q, and an adder **8**A**9**. The multipliers **8**A**7**I and **8**A**7**Q, the integrators **8**A**8**I and **8**A**8**Q and the adder **8**A**9** form a power detector **8**A**10**.

The band setting unit **8**B consists of a level determiner **8**B**1**, adders **8**B**2** and **8**B**4** and ½ multipliers **8**B**3** and **8**B**5**.

[**0091**] The frequency components in a narrow range of the digital input transmitting signal S_T from the divider **9** are extracted by using the variable filter **8**A**5**. The center frequency of the narrow pass band of the variable filter **8**A**5** is discretely swept in a sawtooth shape as shown in **FIG. 16A** by the frequency sweep signal generated in the frequency sweeper **8**A**6**. Outputs from the variable filter **8**A**5** are the I signal and the Q signal, and their absolute values are squared by the multipliers **8**A**7**I and **8**A**7**Q. In the case where the center frequency of the variable filter **8**A**5** is fixed, the integrators **8**A**8**I and **8**A**8**Q each calculate a time average of the squared signal at the center frequency. In the case where the center frequency of the variable filter **8**A**5** is swept, the integrators **8**A**8**I and **8**A**8**Q each calculate a moving average of the squared signal. Either of the method mentioned above is performed to smooth fluctuation of the output of the variable filter **8**A**5**. Outputs from the integrators **8**A**8**I and **8**A**8**Q are added at the adder **8**A**9**. The result of the addition is provided to the level determiner **8**B**1** as an output from the frequency band detector **8**A, as shown in **FIG. 16B**.

[**0092**] The level determiner **8**B**1** references a discrete frequency represented by the frequency sweep signals from the frequency sweeper **8**A**6**, and detects the frequencies at which levels of the output from the power determiner **8**A **10** are equal to or greater than the preset threshold V_{th} as shown in **FIG. 13E**, as the lower limit frequencies and the upper limit frequencies of the frequency bands FB**1** and FB**2** of the signals. In such a case, the embodiment determines that the frequency which is reverse to the result of comparison with the threshold as the lower limit frequency or the upper limit frequency, as the power determiner **8**B**1** discretely sweeps the frequency.

[**0093**] The variable filter **8**A**5** of the frequency band detector **8**A may be constructed of is a digital filter. The pass-bandwidth and the center frequency are determined by coefficients of the digital filter. The variable filter **8**A**5** sets the pass-bandwidth and the center frequency by using a previously calculated coefficients list according to the output from the frequency sweeper **8**A**6**. The pass-bandwidth is set so as to be narrow enough in comparison to the bandwidth of the input transmitting signal S_T. For example, if a bandwidth of a base band transmitting signal S_T is 15 MHz, the pass-bandwidth of the variable filter **8**A**5** may be set around 1 kHz. The frequency sweeper **8**A**6** may be adapted to keep the value of the discrete sweep frequencies of one cycle in a shift register, for example, and output the frequency while cycling the frequencies. Alternatively, the frequency sweeper **8**A**6** may be adapted to store the values of the discrete sweep frequencies of a cycle in ROM and repeatedly read out a series of frequency values. The integrators **8**A**8**I and **8**A**8**Q may consist of FIR filters, for example. Alternatively, the integrators **8**A**8**I and **8**A**8**Q may be adapted to store data outputted from a multiplier and obtain a simple average.

[**0094**] Although the eighth to tenth embodiments mentioned above describe the case where the input signal S_T of the digital predistorter **100** is divided to the band controller **8** by the divider **9** and frequency bands of the signals contained in the input signal S_T with respect to the frequency bands FB**1** and FB**2** are detected, it is also possible to arrange such that the power amplifier output monitor signal S_M is divided by a divider **20** to the frequency band controller **8** as shown by a broken line in **FIG. 8** and frequency bands of signals in the frequency bands FB**1** and FB**2** are detected from the monitor signal S_M.

EFFECTS OF THE INVENTION

[**0095**] As described above, according to the present invention, appropriate distortion compensation can be made for each frequency band by extracting signals of each frequency band from the input signals including signals in a plurality of frequency bands by the variable band signal extractor, and distortion compensation for each frequency band by distortion compensation values read out from the lookup table provided for each frequency band. Specifically, the signals in each frequency band can be amplified by a common power amplifier because a distortion compensation value is added to signals in each frequency band and then the added results are combined by the combiner. Therefore, even if many numbers of frequency band signals to be transmitted exists, the signals in each frequency band can be amplified by the common power amplifier, while performing appropriate distortion compensation in each frequency band. As a result, the present invention can simplify the device and also suppress power consumption and downsize the device.

[**0096**] With the predistorter of the present invention provided for a power amplifier, it is possible to linearly amplify signals in the frequency bands corresponding to the service state of a wireless system. It is advantageous in that the present invention can eliminate additional equipment which would be required as the frequency band changes or carrier waves increase.

[**0097**] The present invention can use the variable band signal extractor consisting of a variable filter to simplify and make affordable the change of the frequency bands. The variable filter can make the center frequency and the bandwidth variable. The variable filter can accommodate the change in the frequency of wireless system by using a single lookup table type predistorter. As such, an operating frequency band of the lookup table type predistorter of the present invention is switched by a frequency switching instruction from an operation center, for example, or an operating frequency band is automatically switched when the frequency band is detected from the input signal. Therefore, the present invention is advantageous as it eliminates operation for executing adjustment with tremendous efforts required in the conventional lookup table type predistorters.

What is claimed is:

1. A multi-band lookup table type predistorter for adding predistortion components for canceling distortion components produced by a power amplifier to an input transmitting signal and outputting the result comprising:

N output side variable band signal extractors for extracting output signals in N frequency bands from output signals from the power amplifier, wherein N is an integer of 2 or greater;

N difference detectors for detecting differences between transmitting signals in N frequency bands and N output signals from said N output side variable band signal extractors;

N lookup tables for reading distortion compensation data of corresponding N frequency bands by using differences of said N frequency bands as reference signals;

N adders for adding the distortion compensation data read out from said N lookup tables to the transmitting signals in the corresponding N frequency bands;

a combiner for combining the added outputs from said N adders and outputting the combined result as a transmitting signal with the predistortion; and

a frequency band controller for controlling frequency bands of said N output side variable band signal extractors.

2. The predistorter according to claim 1, further comprising N input side variable band signal extractors for extracting transmitting signals in said N frequency bands from the input transmitting signal in response to receiving a band control common to said N output side variable band signal extractors from said frequency band controller.

3. The predistorter according to claim 2, wherein at least said N input side variable band signal extractors, said N output side variable band signal extractors, said N difference detector, and said N adders are realized by an analog signal processing circuit.

4. The predistorter according to claim 2, wherein at least said N input side variable band signal extractors, said N output side variable band signal extractors, said N difference detectors, and said N adders are realized by a digital signal processing circuit.

5. The predistorter according to claim 2, wherein at least either of said N input side variable band signal extractors and said N output side variable band signal extractors consist of band elimination filters with a plurality of different eliminating bands.

6. The predistorter according to claim 2, wherein at least either of said N input side variable band signal extractors and said N output side variable band signal extractors consist of N pass-band filters with the center frequencies of respective frequency bands.

7. The predistorter according to claim 2, wherein said frequency band controller controls the center frequencies of said N input side variable band signal extractors and said N output side variable band signal extractors.

8. The predistorter according to claim 2, wherein said frequency band controller controls the bandwidths of said N input side variable band signal extractors and said N output side variable band signal extractors.

9. The predistorter according to claim 2, further comprising an update controller for updating compensation data of said N lookup tables based on differences of said N frequency bands.

10. The predistorter according to claim 2, wherein said frequency band controller comprises a frequency band detector for detecting signals of N frequency bands from said input transmitting signal, and a band setting unit for controlling said N input side variable band signal extractors and said N output side variable band signal extractors based on said detected signals of the N frequency bands.

11. The predistorter according to claim 10, wherein said frequency band detector comprises:

a sweep signal generator for generating a sweep signal:

a local signal generator for generating a local oscillation signal whose frequency is swept according to said sweep signal;

a mixer for multiplying said local oscillation signal by said input transmitting signal;

a low-pass filter for extracting direct current components from output from said mixer and outputting the direct current components as band detecting signal;

wherein said band setting unit references said sweep signals and determines a lower limit frequency, an upper limit frequency and a center frequency of each of the N frequency bands from said band detecting signal and sets the lower limit frequency, the upper limit frequency and the center frequency to said N input side variable band signal extractors and said N output side variable band signal extractors.

12. The predistorter according to claim 10, wherein said frequency band detector comprises converting means for converting said input transmitting signals to frequency domain signals and detecting said N frequency bands; and said band setting unit comprises a level comparator for comparing levels of said N frequency bands with a predetermined threshold and determining the lower limit frequency and the upper limit frequency of each frequency band and means for determining an average of the lower limit frequency and the upper limit frequency of each of said frequency bands from the lower limit frequency and the upper limit frequency as the center frequency.

13. The predistorter according to claim 10, wherein said frequency band detector comprises:

a sweep signal generator for generating a frequency sweep signal;

a variable filter whose center frequency is swept by said frequency sweep signal, for extracting frequency components at each sweep frequency from said input transmitting signal;

a power detector for detecting power of said frequency components;

wherein said band setting unit comprises:

a level comparator for comparing power of said detected frequency components with a threshold and determining the lower level frequency and the upper level frequency of each frequency band; and

means for determining an average of the lower limit frequency and the upper limit frequency of each of said frequency bands from the lower limit frequency and the upper limit frequency as the center frequency.

* * * * *