STANDARD FOR AUTOMATIC EQUIPMENT IDENTIFICATION

Standard
S-918

Adopted: 1991; Revised: 1995, 2000, 2002

TABLE OF CONTENTS

Paragraph	Subject	Page No.
1.0	General	K–87
1.1	Scope	K–87
1.2	References	K–87
2.0	Identification System Requirements	K–88
2.1	General Requirements	K–88
2.2	Tag Requirements	K–88
3.0	Interrogator Requirements	K–89
3.1	Interrogator Power and Sensitivity	K–89
3.2	Additional Requirements	K–89
3.3	Supplementary Interrogator Specifications	K–89
4.0	System Operation	K–90
4.1	Overview—Components	K–90
4.2	Overview—Operation	K–90
4.3	Modulated Backscatter Communication	K–91
4.4	RF Module	K–91
4.5	Reader	K–92
4.6	Antenna	K–92
4.7	Tag	K–92
5.0	Tag-to-Sensing-Equipment Communication	K–93
6.0	Tag Frequency of Operation and Sensitivity	K–93
6.1	Tag Activation Thresholds	K–93
6.2	Tag Performance Levels	K–94
7.0	Tag Data Content and Format	K–94
7.1	Overview	K–94
7.2	Bits Reserved for Procedural Needs	K–94
7.3	General Use Fields	K–98
8.0	Tag Encoding Equipment and Procedure	K–99
9.0	Location and Mounting of Tags on Equipment	K–100
9.1	General	K–100
9.2	Freight Cars and Locomotives	K–101
9.3	End-of-Train Devices	K–104
9.4	Containers	K–104
9.5	Chassis and Flatbed Trailers	K–107
9.6	Trailers	K–108
9.7	Generator Sets, Nitrogen Clips, or Separable Refrigeration Units	K–108

Siemens EX1030
Page 1 of 177

Paragraph	Subject	Page No.
9.8	Railcar Covers, Roofs, and Hoods	K–109
9.9	Tag Application Procedure	K–109
9.10	Request for Tag Placement Variances	K–112
9.11	Variances to Standard Tag Placement Window	K–112
10.0	Approval Requirements	K–114
10.1	Approval of Tags	K–114
10.2	Facility Certification	K–114
10.3	Design or Manufacturing Changes	K–114
Appendix A	Tag Data Format for The Railcar	K–116
Appendix B	Tag Data Format for the Locomotive	K–120
Appendix C	Tag Data Format for Trailers	K–123
Appendix D	Tag Data Format for Chassis	K–128
Appendix E	Tag Data Format for the End-of-Train Device	K–133
Appendix F	Tag Data Format for the Intermodal Container	K–135
Appendix G	Refrigerator Vehicle Dynamic Tag Data Format	K–138
Appendix H	Locomotive Dynamic Tag Data Format	K–142
Appendix I	Railcar Cover Tag Data Format	K–146
Appendix J	Passive Alarm Tag Data Format (Type I)	K–148
Appendix K	Impact Recorder Dynamic Tag Data Format (Type I)	K–152
Appendix L	Generator Set Tag Data Format	K–159
Appendix M	Tag Data Format for Rail-Compatible Multi-Modal Equipment	K–163
Appendix N	Seven-Bit ASCII Table	K–170
Appendix O	Six-Bit ASCII Table	K–171
Appendix P	Format of Data Sent from Reader to Data Processor	K–172
Exhibit A	AEI Tag Placement Window—4-Axle Rail and Passenger cars	K–176
	AEI Tag Placement Window—6-Axle Rail and Passenger cars	K–177
	AEI Tag Placement Window—2-Axle Railcar	K–178
Exhibit B	AEI Tag Placement Window—6-Axle Locomotive	K–179
	AEI Tag Placement Window—4-Axle Locomotive	K–180
Exhibit C	Tag Location—End-of-Train Devices	K–181
Exhibit D	Tag Location for Containers of 40 ft (12.2 m) or less	K–182
	Tag Location for Containers Longer than 40 ft (12.2 M)	K–183
Exhibit E	Recommended Tag Location—Chassis	K–184
Exhibit F	Alternative Tag Placement—Chassis	K–185
Exhibit G	Alternative Tag Placement—Chassis	K–186
Exhibit H	Recommended Tag Location—Trailers	K–187
Exhibit I	Recommended Tag Location—Railcar Covers, Roofs, and Hoods	K–188
Exhibit J	Recommended Tag Location—Multimodal Trailers	K–189
Exhibit K	Recommended tag Location—Multimodal Bogie	K–190
Exhibit L	Recommended Tag Location—Multimodal Coupler-Mate	K–191

STANDARD FOR AUTOMATIC EQUIPMENT IDENTIFICATION

Standard
S-918

1.0 GENERAL

1.1 Scope

1.1.1 This AAR standard specifies requirements for the automatic electronic identification of equipment used in rail transportation, such as railcars, locomotives, intermodal vehicles, and end-of-train devices (subsequently referred to as "equipment" in this document). The installation of this identification system on freight equipment is not a requirement for acceptance in railroad interchange service, except as specified in the AAR *Field Manual of Interchange Rules*.

1.1.2 This document describes a reflected energy system in which sensing equipment shall decode radio waves reflected by a tag mounted on equipment used in the transportation industry. The reflected radio waves shall indicate the identification code of the equipment as well as other information.

1.1.3 The system and data outputs described in this standard are compatible with ANSI Standard MH5.1.9-1990 and ISO Standard 10374 for the automatic identification of containers. This standard is also compatible with the standard of the American Trucking Association (ATA) for automatic identification of trailers and chassis. The ATA standard also covers other highway equipment such as tractors, straight trucks, and converter dollies. That standard is available from the ATA in Alexandria, VA.

1.2 References

1.2.1 American National Standards Institute, *American National Standard for Freight Containers—Automatic Identification,* ANSI MH5.1.9-1990

1.2.2 International Standards Organization, ISO 6346—Freight Containers—Coding, Identification, and Marking

1.2.3 International Standards Organization, ISO IS 10374—Standard for Automatic Identification of Containers

1.2.4 International Standards Organization, ISO 9001—Quality Systems

1.2.5 AAR *Manual of Standards and Recommended Practices*, Section C, Part III—Specifications for Tank Cars (M-1002); Section L—Lettering and Marking of Cars (S-910)

1.2.6 AAR *Universal Machine Language Equipment Register (UMLER) Data Specification Manual*

1.2.7 AAR *Interchange Rules for Trailer/Container-on-Flatcar Service*, Section O, latest revision

1.2.8 AAR *Trailer and Container Service Rules*, Section 3, Reporting Marks and Numbering System

1.2.9 AAR Specification M-1003, Specification for Quality Assurance

1.2.10 AAR Specification S-060, Application for Component Approval Procedures

1.2.11 AAR Report R-811, *Summary of Laboratory Tests Performed on Amtech Automatic Equipment Identification Tags*, July 1992

1.2.12 *Field Manual of the AAR Interchange Rules*

1.2.13 Military Standard 481, latest revision, Configuration Control—Engineering Changes, Deviations, and Waivers

1.2.14 Military Standard 810-D, Environmental Test Methods and Engineering Guidelines

2.0 IDENTIFICATION SYSTEM REQUIREMENTS

2.1 General Requirements

2.1.1 Tags mounted on transportation equipment shall be read by an interrogator (reader) that operates on ultrahigh frequency radio waves. The reader shall decode the altered radio waves reflected by the tags on the equipment. The altered radio waves (modulation) shall indicate the alphanumeric identification code of the equipment as well as other predefined information.

2.1.2 The interrogator shall optionally add its own identification number, the date, and the time, and shall transmit all of this data over the user's communications link used for sending such messages. The transmission line interface shall be specified by the user.

2.1.3 The system shall accurately read freight trains moving at up to 80 mph with any equipment configuration (e.g., double-stack containers, including 20-ft units, containers on chassis on flatcars, end-of-train devices). This requirement applies in areas of one, two, and more than two parallel tracks, at ordinary track centers, with trains standing or operating on any or all of these tracks, in the same or opposite direction.

2.2 Tag Requirements

This section applies to tag designs that are approved for use in interchange service. Equipment owners may choose to use other tags for supplementary applications in addition to those required by the interchange rules.

2.2.1 Approval Requirements

Tags must be approved in accordance with paragraph 10.0 of this standard and S-060, Application for Component Approval Procedures. Tags must meet the requirements detailed in the "Recommended Test Protocol for Future Tag Designs," included in AAR Report R-811, *Summary of Laboratory Tests Performed on Amtech Automatic Equipment Identification Tags*.

2.2.1.1 General

The tag unit shall be tamper-proof and sealed such that it will survive and operate properly under the conditions of its expected operating environment. Railcar and locomotive tag life shall not be less than 15 years, and no maintenance shall be required. Tags shall survive and operate through the environment of contaminants, shock and vibration experienced in rail service, and in highway and maritime service for intermodal tags.

2.2.1.2 Tag Survivability—Radio Frequency Energy

2.2.1.2.1 The tags shall survive and maintain the integrity of stored data in a maximum peak field strength of 1500 V/m for 60 pulses (2.0- to 2.5-µs pulse width with a 2.7- to 3.2-ms dwell time) in the 1.2 to 1.4 GHz range, and 100 V/m for 60 seconds for any continuous wave radio frequency source.

2.2.1.2.2 The tags shall be capable of full operation in the electromagnetic environment normally found at railroad facilities.

2.2.1.3 Field Programmability

Tags shall be capable of being programmed in the railroad environment by user personnel.

2.2.1.4 Marking

The designation "AAR," the type of tag (such as "Standard Tag," "High Temp Tag," "Intermodal Tag," or "EOT Tag"), and the specific model and version number and lot number or Julian date

shall be indelibly marked on the front face of the tag. These markings shall be readily visible when the tag is in place on the equipment.

Examples are as follows:

AT511O-AARV1.00 w10
(Model No.)- (Version No.) (Warranty Period in Years)
Standard Tag L91121
(Type) (Lot Number is Julian date tag passed final inspection)

AT5125-AAR V1.00 w10
(Model No.)- (Version No.) (Warranty Period in Years)
High Temp Tag L91121
(Type) (Lot Number is Julian date tag passed final inspection)

AT5541 V1.00 W1
(Model No.)- (Version No.) (Warranty Period in Years)
EOT Tag L94256
(Type) (Lot Number is Julian date tag passed final inspection)

AT55707-AAR V1.00 W10
(Model No.)- (Version No.) (Warranty Period in Years)
Dynam-BP Tag L96264
(Type) (Lot Number is Julian date tag passed final inspection)

3.0 INTERROGATOR REQUIREMENTS

This document does not specify all attributes of the interrogator because they are at the discretion of the user railroad.

3.1 Interrogator Power and Sensitivity

No minimum or maximum interrogator power shall herein be specified. However, the minimum antenna EIRP (effective isotropic radiated power) and interrogator receiver sensitivity shall be adequate to properly interrogate tags capable of responding as specified in this document at all distances between the minimum and maximum distances specified by the user. The maximum EIRP and transmitter power output of the interrogator shall be within the limits prescribed by the telecommunications authority of the country in which the interrogator shall be operated. Within the U.S., Federal Communications Commission licensing is required.

3.2 Additional Requirements

3.2.1 Interrogator units shall be capable of interrogating multiple tags within their reading field, discriminating between the tags without misreading. Interrogators employing tag response levels as a method of discriminating between multiple tags may accomplish this by distance differential and/or position relative to the antenna pattern.

3.2.2 Error detection shall be used to ensure reading accuracy.

3.2.3 The interrogator system must accommodate both fixed and mobile vehicle applications.

3.3 Supplementary Interrogator Specifications

While not a part of automatic equipment identification per se, the following requirements are included because they are essential to railroads' effective utilization of AEI.

3.3.1 Equipment Detector

3.3.1.1 The system shall detect the presence and direction of movement of each individual unit of rolling stock and shall provide suitable output words for missing and incorrect tags (and incorrect

characters if appropriate checking is implemented). The equipment detector function shall provide for sensing the following conditions:

3.3.1.1.1 Equipment presence—to detect each unit of rail rolling stock, whether equipped with tags or not, including cars and locomotives.

3.3.1.1.2 Train presence—upon approach of a train or a cut of cars or a single car, the system shall transition from the idle to the active mode. Upon the train or car(s) leaving the system, the system shall provide a "clean list" report on the net movement of equipment and the system shall transition to the idle mode. This "clean list" will contain no duplications or omissions of rolling stock initials and numbers resulting from stops and reverse moves before the interrogator.

3.3.1.2 The equipment detector function may be provided as part of an interrogator module or as a separate module. When provided as a separate module, the equipment detector function may be furnished by the railroad (in the form of track circuits or axle counters) rather than by the AEI vendor. The AEI vendor is not relieved of the AEI system performance responsibility in any case.

4.0 SYSTEM OPERATION

4.1 Overview—Components

The radio communication system described herein consists of a reader system (i.e., reader, RF module, and antenna) and tags. Tags are placed on objects to be identified, and readers, antennas, and RF modules are installed at points to record the passing of tagged objects. The system is designed for localized application where the tag passes by the reader system.

4.2 Overview—Operation

The block diagram of Fig. 4.1 indicates the function of each component. The RF module transmits an unmodulated signal in the direction of a tag (f_o). The tag reflects a modulated signal back to the RF module (f_{om}). The RF module receives the reflected signal from the tag and relays this information to the reader. The reader decodes the information contained in the tag and relays the information to a host computer for subsequent use to identify, track, and schedule the tagged objects.

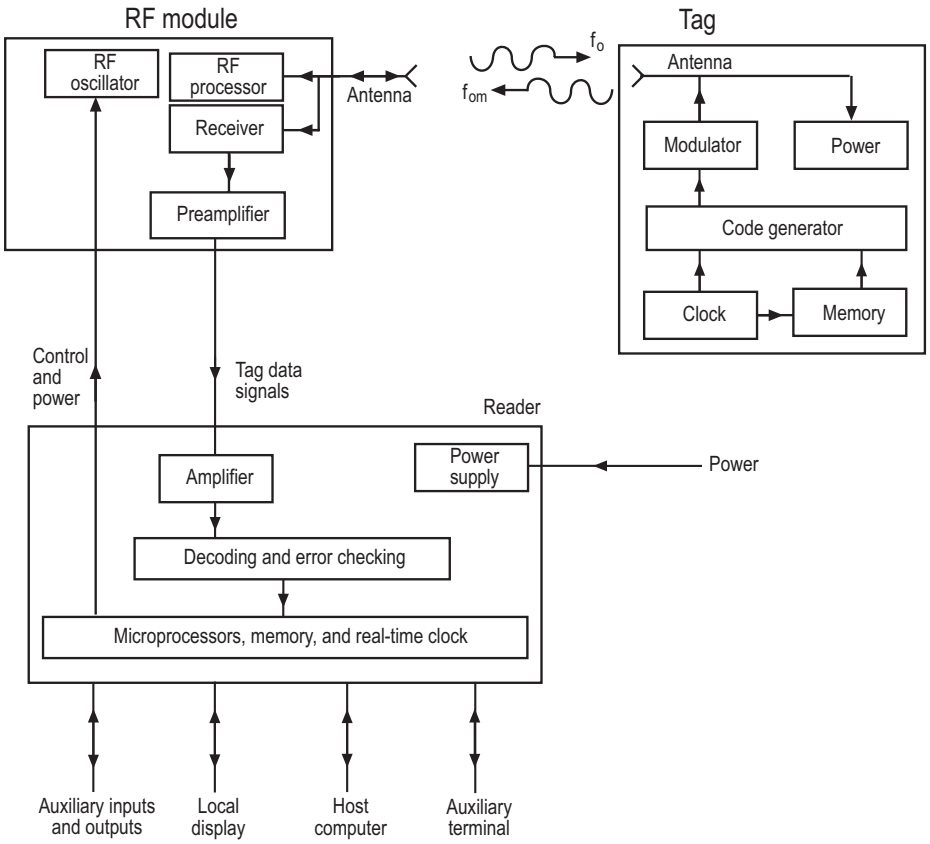

Fig. 4.1 Block diagram of the RF module, reader, antenna, and tag

4.3 Modulated Backscatter Communication

The tag shall not be a transmitter and shall not contain components to generate radio frequency (RF) signals. The tags must act merely as field disturbance devices, slightly modifying and reflecting the signal transmitted by the reader system. This slight modification of the signal includes the unique identification code of the tag. This method of communication is called "modulated backscatter."

4.4 RF Module

4.4.1 Components

The RF module shall be composed of an RF oscillator, RF processor, receiver, and preamplifier. The RF module is responsible for transmitting and receiving radio energy. RF energy is generated by the RF oscillator and amplified by the RF processor. This energy is transmitted through the antenna, and the RF energy reflected by the tag is also received by the same antenna.

4.4.2 Frequency

The RF module shall transmit a single frequency of RF energy and receive that same frequency after it is reflected from the tag.

4.4.3 Specifications

The Homodyne receiver is used to separate the transmitted continuous wave (CW) energy from the information reflected by the tag. The tag information shall be encoded into 20- and 40-kHz signals that modulate the RF energy reflected by the tag. The RF module shall have the following approximate specifications:

Table 4.1 RF module approximate specifications

Description	Typical Specifications
Standard transmit and receive frequencies and applications	902.250 MHz [intermodal/yard] 903.750 MHz [intermodal/yard] 910.000 MHz [intermodal/yard] 911.500 MHz [trackside] 913.000 MHz[intermodal/yard] 915.000 MHz [intermodal/yard] 917.000 MHz[intermodal/yard] 918.500 MHz [trackside] 920.000 MHz [intermodal/yard] 921.500 MHz [intermodal/yard]
Frequency stability	±0.0005%
Transmitter bandwidth	20 kHz
Nominal RF power (measured at transmitter)	2.0 W
Harmonic output	–50 dBc
Spurious output	–60 dBc
Receiver bandwidth	130 kHz
Frequency separation for multiple reader systems*	2 MHz

* Some installations require a number of reader systems to operate in close proximity, i.e., less than 100 m between reader systems. These RF modules must operate at frequencies separated by a minimum of 2 MHz.

4.5 Reader

The RF module receives the modulated signal from the tag and passes the 20- and 40-kHz modulating frequencies to the reader. The reader shall decode the frequencies into binary information equivalent to the 128 bits of data stored in the tag. The reader is composed of the amplifier, decoding and error checking circuit, microprocessor, real-time clock circuit, and power supply.

4.6 Antenna

The reader system shall be capable of using a single antenna to transmit and receive RF energy.

4.7 Tag

4.7.1 Components

The tag shall be composed of the modulator, power, code generator, clock, memory, and antenna circuits. The clock circuit sequences all circuit functions such that information stored in the memory circuit is conveyed to the reader system within precise timing. The information stored in the memory circuit is permanent and is a unique code that is specified by the owner prior to installation of the tag onto its respective object (container, railcar, truck, etc.).

4.7.2 Code Generator and Modulator

The code generator encodes the information stored in the memory circuit. The modulator collects the encoded information from the code generator and controls the antenna circuit such that the encoded information is reflected to the reader system.

4.7.3 Tag Classes

There are multiple versions of the tag. Nonbattery tags must be sufficiently close to the reader system's antenna in order to collect enough energy to activate the tag's electronics. Battery-powered tags do not require as close proximity to the reader system's antenna because the battery activates the electronics at all times. Advantages of the battery tag shall include greater range and reduced RF power required from the reader system, and the advantage of the nonbattery tag is a longer life. Regardless of whether the tag has a battery or not, a tag does not transmit RF energy; it only reflects energy transmitted by the reader system.

5.0 TAG-TO-SENSING-EQUIPMENT COMMUNICATION

5.1 The encoding of user data bits shall include eight sub-bits for each user bit. A sub-bit shall be coded by the tag and decoded by the sensing equipment with a modified frequency-shift keying (FSK) code using two harmonically related frequencies, one (40 kHz) being the exact double of the other (20 kHz), with a frequency tolerance of ±10%. A ‘0’ bit shall consist of one 20-kHz square wave cycle followed by two 40-kHz square wave cycles. A ‘1’ bit shall consist of two 40-kHz square wave cycles followed by a 20-kHz square wave cycle. All transitions shall be phase-continuous. As depicted in Fig. 5.1, the tag shall produce a waveform that shall have a nominal 1-µs rise and fall time and duty cycle for the 20- and 40-kHz square wave cycles of 50%.

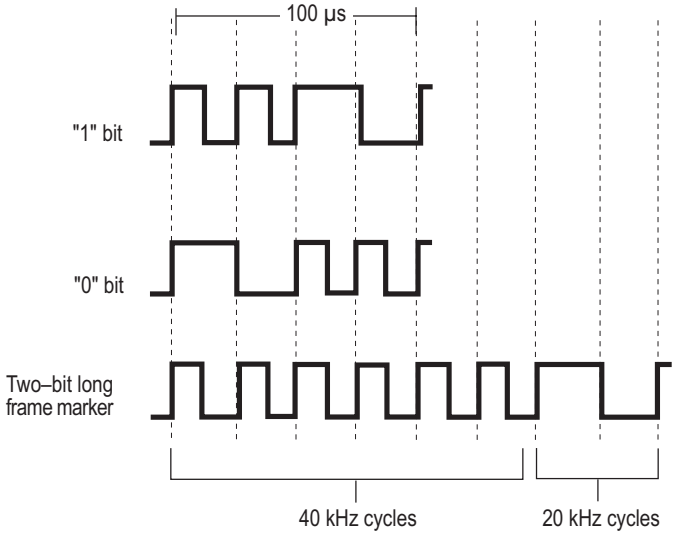

Fig. 5.1 Frequency-shift keying (FSK) encoding

5.2 The tag electronics shall cause the data to scroll repeatedly without pause from bit “cell” 127 of a frame (a frame consisting of all 128 bits) to bit “cell” 0 of the succeeding frame.

5.3 The tag shall use the coded identification data and related permanent information to amplitude-modulate the incoming continuous wave radio frequency carrier signal from the sensing equipment. The resulting modified FSK signal (carrier and sidebands) shall be reflected by the tag, received by the sensing equipment for decoding, and after decoding made available to automatic data processing systems. The modulation polarity shall be of no consequence.

6.0 TAG FREQUENCY OF OPERATION AND SENSITIVITY

6.1 Tag Activation Thresholds

6.1.1 The nonbattery tag shall not operate in root mean square (RMS) electric field strengths below 2.0 V/m, and shall operate properly in RMS electric field strengths above 3.5 V/m. The field strength required for nonbattery tag operation shall not increase by more than 3 dB when it is rotated by ±25° in any plane.

6.1.2 Battery-powered dynamic tags shall have a minimum sensitivity such that an interrogating signal of 750 mV/m will allow proper tag operation. Other battery and end-of-train device tags shall have a minimum sensitivity such that an interrogating signal of 150 mV/m will allow proper tag operation.

6.1.3 Battery-powered dynamic tags shall be operational within 7 ms of excitation by an interrogating signal from sensing equipment. All other tags shall be operational within 4 ms of excitation by an interrogating signal from the sensing equipment.

6.2 Tag Performance Levels

6.2.1 When a properly presented tag is excited as indicated by an incident wave at a given reference range, it shall respond within the following modulated return signal strength, exclusive of carrier and as measured at the same reference range:

Table 6.1 Incident wave signal response levels

Tag Type	Frequency (MHz)	Reference Range	Test Conditions	RMS Signal Strength (μV/m)	
				Minimum	Maximum
Beam (nonbattery)	904–928	5m	3.5 V/m at Tag	19,600	56,800
Battery	904–928	10m	EIRP=1W	1,400	4,100
End-of-train device	904–928	5m	3.5 V/m at Tag	2,900	6,700
Battery dynamic	904–928	10m	EIRP=1W	762	2,210

6.2.2 Battery and end-of-train device tags' return signal strength shall be reduced by no more than 3 dB when the tag is rotated by ±10° in the plane coincident to the antenna polarization, or rotated by ±20° in the plane perpendicular to the antenna polarization.

7.0 TAG DATA CONTENT AND FORMAT

7.1 Overview

7.1.1 The tag is composed of 128 bits of nonvolatile memory that can be divided into two sections. The first section is composed of data bits that are used for procedural needs and the second section is composed of data bits that are available for general use. Procedural needs include error checking, detecting a 128-bit frame of data, indicating the type of data format utilized in the tag, and providing security from unauthorized duplication of tags. Twenty-six bits are used for procedural needs and 102 bits are available for general use.

7.1.2 This section specifies the tag data only for those fields that are common to all rail-related applications. For tag data specifications for the remaining fields, refer to the appropriate appendix of this document.

7.2 Bits Reserved for Procedural Needs

A listing of the fields reserved for procedural needs is presented below:

Table 7.1 Allocation of fields required for procedural needs

Field Destination	Bit Position (out of a possible 0 to 127)
First Check Sum	60, 61
Reserved Frame Marker	62, 63
Security	106–117
Format Code	118–123
Second Check Sum	124, 125

Table 7.1 Allocation of fields required for procedural needs

Field Destination	Bit Position (out of a possible 0 to 127)
Frame Marker	126, 127

7.2.1 First Check Sum

There are three methods of error detection that are derived exclusively from the tag data and the way it is conveyed to the reader. The Check Sum fields are used in one of the methods to detect errors in the data received by the reader. The First Check Sum is calculated by adding bits 0 through 59 and truncating all but the right-most two bits of the binary resultant. This calculation is done automatically by the tag programmer at the instant the tag is programmed. When the reader acquires tag information, it checks these two bits to help determine if there is an error in the previous 60 bits.

7.2.2 Reserved Frame Marker

Reserved for future use as a Frame Marker.

7.2.3 Security

7.2.3.1 These 12 bits have been reserved for security purposes, although if security is not desired, these bits can be designated for limited general use. The Security field has been divided into two six-bit fields. For security applications, the two fields may contain any combination of the values presented in Table 7.2, or one field must contain a security value from Table 7.2 and the other field may contain any value in Table 7.2 or Table 7.3. If an owner requires security, a unique Security Character will be assigned to the owner's tag programmer at the time of purchase, or the Security field can be programmed at the factory.

Table 7.2 Reserved security values

Six-Bit ASCII Character	Decimal Value	Six-Bit ASCII Character	Decimal Value	Six-Bit ASCII Character	Decimal Value
!	1	)	9	?	31
“	2	+	11	@	32
#	3	,	12	[	59
$	4	:	26	\	60
%	5	;	27	]	61
&	6	<	28	^	62
‘	7	=	29	_ (underline)	63
(	8	>	30		

7.2.3.2 If the user does not require security, then the two fields can contain any combination of the following values:

Table 7.3 Nonsecure data values

Six-Bit ASCII Character	Decimal Value	Six-Bit ASCII Character	Decimal Value	Six-Bit ASCII Character	Decimal Value
(space)	0	9	25	N	46
*	10	A	33	O	47
-	13	B	34	P	48
.	14	C	35	Q	49
/	15	D	36	R	50
0	16	E	37	S	51
1	17	F	38	T	52
2	18	G	39	U	53
3	19	H	40	V	54

Siemens EX1030
Page 11 of 177

Table 7.3 Nonsecure data values

Six-Bit ASCII Character	Decimal Value	Six-Bit ASCII Character	Decimal Value	Six-Bit ASCII Character	Decimal Value
4	20	I	41	W	55
5	21	J	42	X	56
6	22	K	43	Y	57
7	23	L	44	Z	58
8	24	M	45		

7.2.4 Data Format Code

7.2.4.1 The Data Format code indicates the coding scheme utilized for the bits defined for general use. It ensures that the Data Format, Tag Type, Check Sums, Frame Markers, Equipment Group code, and Security fields will be fixed for all types of referenced equipment and will be uniformly positioned and defined. Other fields such as the Equipment Initial may expand, contract, or change definition from one type of equipment to the next.

7.2.4.2 The following binary format codes (most significant bit on the left) have been assigned:

Table 7.4 Coding scheme for bits defined for general use

000000	Indicates six-bit ASCII format. This format partitions the General Use area into contiguous six-bit fields into which any character indicated in Table 7.2 or Table 7.3 can be programmed.
100100	This data format indicates a refrigerator or locomotive dynamic tag (as defined in Appendix G and Appendix H of this document) that *is not* used for identification purposes (i.e., it is a third tag on a rail vehicle or a second tag on other equipment).
100101	This data format indicates a refrigerator or locomotive dynamic tag (as defined in Appendix G and Appendix H of this document) that *is* used for identification purposes (i.e., it substitutes for a standard tag).
101001	This data format indicates a dynamic tag for impact recorders or a passive alarm tag (as defined in Appendix J and Appendix K of this document) that *is not* used for identification purposes (i.e., it is a third tag on a rail vehicle or a second tag on other equipment).
101010	This data format indicates a dynamic tag for impact recorders (as defined in Appendix K of this document) that *is* used for identification purposes (i.e., it substitutes for a standard tag).
101011	This data format indicates a passive alarm tag (as defined in Appendix J of this document) that *is* used for identification purposes (i.e., it substitues for a standard tag) on a trailer, container, generator set, nitrogen clip, or separable refrigeration unit.
110011	This data format applies to tag applications, other than dynamic tags and passive alarm tags, that are defined in this document as well as other standards such as the International Standards Organization Standard 10374/Addendum 1.
110100	This value indicates a tag programmed for toll road use.
111111	This value indicates a tag whose programming does not conform to an established standard.

7.2.4.3 Additional values have not been assigned and are reserved for future use.

7.2.5 Second Check Sum

This has a similar function and method of calculation as the First Check Sum, except that it is used to verify the data integrity of tag bits 62 to 123.

7.2.6 Frame Marker

These two bits contain a unique signature that is neither a one nor a zero and is used to indicate the start of the next frame.

7.2.7 Reserved Fields

Some data formats specified throughout this document include “Reserved” fields. These fields may not be assigned or used by the owner or user; they are reserved for future use where their values may be assigned by the AAR or other standards organization.

7.3 General Use Fields

The allocation and definition of tag data bits available for general use are specified in the following appendices:

Appendix A	–	Railcar
Appendix B	–	Locomotive
Appendix C	–	Trailer
Appendix D	–	Chassis
Appendix E	–	End-of-Train Device
Appendix F	–	Intermodal Container
Appendix G	–	Refrigerator Vehicle Dynamic Tag
Appendix H	–	Locomotive Dynamic Tag
Appendix I	–	Railcar Cover Tag
Appendix J	–	Passive Alarm Tag (Type I)
Appendix K	–	Impact Recorder Dynamic Tag (Type I)
Appendix L	–	Generator Set
Appendix M	–	Rail Compatible Multi-Modal Equipment

7.3.1 Physical Measurements

7.3.1.1 All physical measurements (such as length, height, weight, etc.) specified in the appendices shall be integer numbers. Fractional measurements shall be rounded to the next higher integer. Unless otherwise specified, data elements are defined as specified in the AAR *Universal Machine Language Equipment Register (UMLER) Data Specification Manual*.

7.3.1.2 Measurements shall be encoded into tags in metric units, and the metric value will be stored in the tag. When tag information is sent from the reader to a host computer, either the metric value or English equivalent, depending on the user's preference, will be output.

7.3.2 Equipment Initial (Mark)/Owner Code and Number

Trailing blanks shall be employed on the Equipment Initial/Owner alpha code, and leading zeros shall be used on the numeric identification field.

7.3.3 Equipment Group Code

This is a numeric field having a value from 0 to 31 that indicates the general type of equipment. Values for this field are indicated in Table 7.5. Only major categories of equipment types are indicated in this field, and other fields are allotted to indicate further details.

Table 7.5 Data values for the Equipment Group code

Value	ASCII Character	Description	Value	ASCII Character	Description
0	?	Other	16	O	Reserved
1	@	Railcar cover	17	P	Tractor (power)
2	A	Reserved	18	Q	Straight truck
3	B	Reserved	19	R	Railcar (includes nonrevenue railcars)
4	C	Train number tag (locomotive variable data)	20	S	Dolly
5	D	Locomotive	21	T	Trailer
6	E	End-of-train device	22	U	Reserved
7	F	Reserved	23	V	Reserved
8	G	Generator set	24	W	Rail-compatible multimodal equipment
9	H	Reserved	25	X	Reserved
10	I	Intermodal container	26	Y	Reserved
11	J	Reserved	27	Z	Chassis
12	K	Marker tags	28	[	Passive alarm tag
13	L	Reserved	29	\	Reserved
14	M	Reserved (formerly nonrevenue rail)	30	]	Reserved
15	N	Reserved	31	^	Experimental use/other

7.3.4 Tag Type

7.3.4.1 The Tag Type indicates the configuration, capability, and memory size of the tag, as indicated inTable 7.6.

Table 7.6 Data values for the Tag Type field

Decimal Value	Description
1	Tag having less than 128 bits of memory
2	Tag having 128 bits of memory, other than dynamic tags
3	Multiple frame tag, includes dynamic tags
4	Reserved

7.3.4.2 To code the Tag Type value into the tag, the decimal value is reduced by 1 and converted to its base 2 equivalent.

8.0 TAG ENCODING EQUIPMENT AND PROCEDURE

Tags must be capable of encoding both by the vendor and by railroad personnel at railroad facilities. Procedures for encoding tags are to be provided by their vendors.

8.1 Tag Encoding Equipment and Procedures

Tags must be capable of encoding both by the vendor and by railroad personnel at railroad facilities. Procedures for encoding tags are to be provided by their vendors. Whenever possible, tags will be encoded automatically using current information from the UMLER (Uniform Machine Language Equipment Register) file.

8.2 Use of Hand Held Reader

Hand-held readers should be used to verify that tags are programmed correctly. The functionality of the tag should be determined from the output of fixed readers. The hand-held reader shall be held a consistent, fixed distance from the tag being read. In no case should the hand-held reader be held any closer than 3 ft from the tag being read.

8.3 Tag Reapplication

Reuse (remove and replace) of AEI tags removed from cars is permitted as long as the plug is not removed and the tag does not fail any of the following:

8.3.1 Tag can be read by the hand-held reader at manufacturer's pre-determined read distance.

8.3.2 Tag is not more than five years old measured by the date of manufacture on the face of the tag (year is the second two digits from the left; see paragraph 2.2.1.4)

8.3.3 There is no significant physical damage to the tag case (e.g., puncture, crack or dent).

8.4 Recommended Practice for Repairing/Replacing Tags

To minimize the cost to repair or replace tags, the preferred locations for repairing or replacing tags are in yards or shop/repair tracks (when the car is shopped for other causes).

9.0 LOCATION AND MOUNTING OF TAGS ON EQUIPMENT

9.1 General

9.1.1 This section provides guidelines for application of automatic equipment identification tags to typical freight vehicles. The arrangements shown as standards are those in use at this time. Alternate arrangements or application techniques that meet the basic requirements noted below are acceptable.

9.1.2 This section does not apply to dynamic or passive alarm tags. For location and mounting specifications for these tags, refer to the appropriate appendices of this document.

9.1.3 General Mounting Specifications—All Equipment

9.1.3.1 The mounting surface must be metal, vertical, and smooth within the area of the tag. No area on the tag's rear surface may be more than 1/4 in. from the metal mounting surface. Mounting surface must not require bending of the tag during attachment. If the desired mounting area will not meet this requirement, a mounting bracket must be provided to satisfy this requirement.

9.1.3.2 If the mounting surface is irregular or nonmetal (e.g., fiberglass), the tag *must* be attached to a metal backplate to provide an electrical reflector for the tag. A 1/8 in. or thicker smooth metal backplate at least as large as the tag should be used. In all cases, backplates are preferred, and they should extend 1 in. beyond the full perimeter of the tag.

9.1.3.3 Aluminum material is permitted as a substitute for mounting plate material specified, when required for compatibility with the vehicle surface.

9.1.3.4 Minor deviations in design of backing plates or application techniques do not require approval. Proprietary backing plate designs that deviate from these standards must be approved by the Equipment Engineering Committee. Test application of alternate designs is encouraged.

9.1.3.5 Wherever possible, tags should be mounted in locations to minimize the likelihood of damage from equipment such as forklifts, piggypackers, and other hazards.

Siemens EX1030
Page 16 of 177

9.1.3.6 Care must be exercised to avoid protrusion of tag and bracket fasteners that may damage the car's interior lining, insulation, or lading.

9.2 Freight Cars and Locomotives

9.2.1 General

9.2.1.1 Each railcar and locomotive shall carry two tags. On railcars, one tag shall be located in a window on the BL (B End–Left) portion and the other shall be located in a window on the AR (A End–Right).

9.2.1.2 On locomotives, one shall be located in a window on the Front-Right (F End–Right) portion and the other in a window on the Rear-Left (R End–Left) portion.

9.2.1.3 Tags must be placed in a vertical plane at least 4 ft from the centerline of the track. The tags must be in a rectangular area bounded by horizontal lines 2 to 5 ft above top of rail, measured for an empty car. Adjust for spring travel on a loaded car.

9.2.1.4 For railcars, the center of the tags shall be positioned as follows: Measuring from the centerline of the truck, from 1 ft 6 in. (18 in.) toward the outboard end of the car to 2 ft towards the center of the car, measured from the centerline of the inside axle. This provision applies to two-axle trucks as well as to trucks of more than and less than two axles (see diagrams, Exhibit A and Fig. 9.1).

9.2.1.5 For locomotives, the center of the tags shall be positioned from the centerline of the truck to 2 ft toward the center of the locomotive, measured from the centerline of the inside axle. This provision applies to two-axle trucks as well as to trucks of more than two axles (see diagrams, Exhibit B).

9.2.2 Tag Orientation

Tags shall be mounted on a plane perpendicular to the ground and shall be oriented with horizontal polarization. The long axis of the tag must be within 10° of parallel to the rail. The face of the tag must not be rotated outward toward the ground more than 10° from the car mounting surface. Inward rotation of the tag is prohibited.

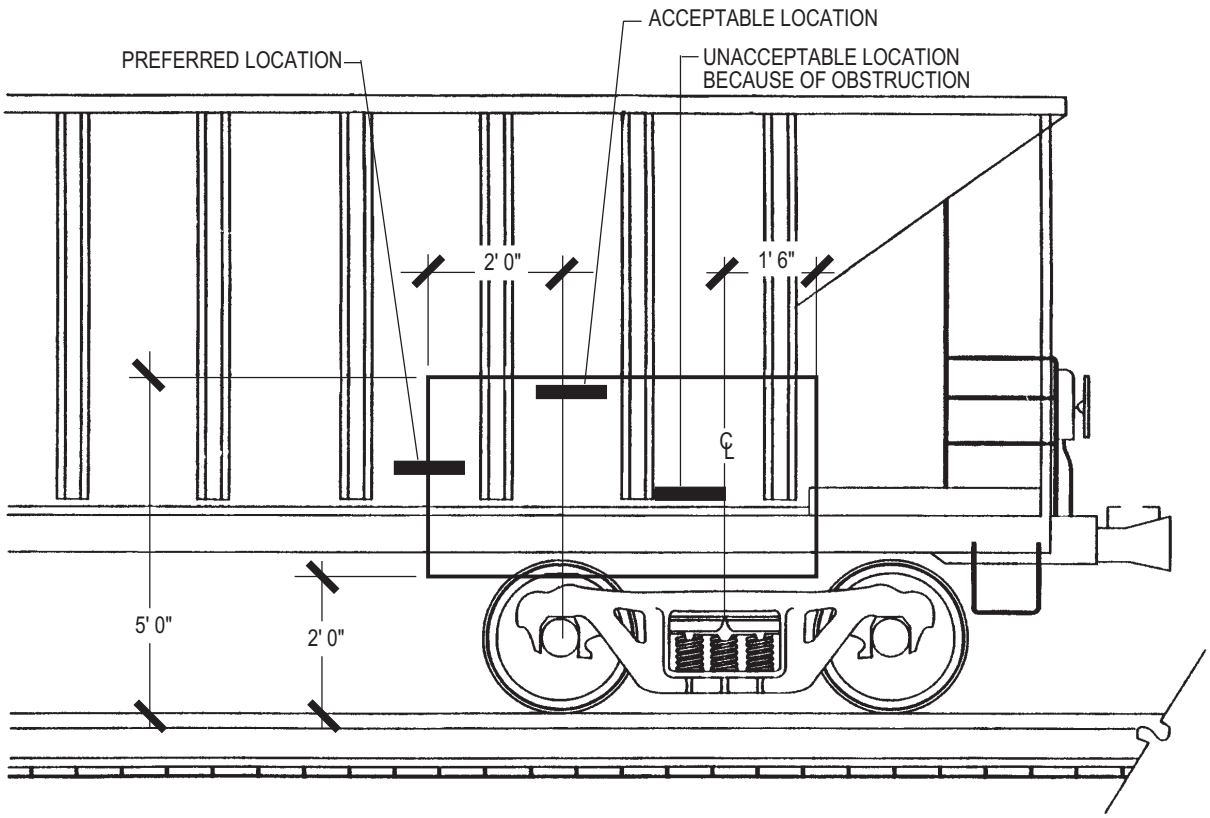

Fig. 9.1 Mounting location examples

9.2.3 Vehicle Clearance

The tag shall not protrude beyond the clearance profile of the vehicle to which it is attached.

9.2.4 Tag Clearance

9.2.4.1 Tags shall be mounted so as to maximize readability. The "Clear Zone" (see Fig. 9.1 and Fig. 9.2) surrounding the tags and toward the wayside must not be obstructed by any metallic object(s) or protrusion(s). Any obstructions in the "Clear Zone" may introduce reading problems with the tags.

9.2.4.2 To allow for unobstructed transmission of data, tags must be afforded horizontal and vertical "clearance windows" of 1 in. on each side. These windows radiate out at 45° from the ends of the tags, and at 60° from the sides of the tags as depicted in Fig. 9.2. No part of the car structure or attachments may extend into the clearance zones as depicted to include 1 in. from the periphery of the tag.

9.2.5 Tag Class

Tags on railcars and locomotives shall perform according to the specifications in paragraph 6.0 for beam-powered tags.

9.2.6 Articulated Cars

For articulated cars, each car shall carry at least two tags (one on each end platform). Optionally, two tags may be placed on each platform. In that case, for the purpose of tag installation, the B end of each platform (other than the B platform) shall be considered as that end of the platform that is closer to the B platform.

9.2.7 Tank Cars

For tank cars, tags may *not* be attached to the tank itself or to safety appliances, such as handrails, except as may be permitted by the AAR *Manual of Standards and Recommended Practices*.

9.2.8 Roadrailer-Type Vehicles

9.2.8.1 Roadrailer-type vehicles should be treated and tagged as both cars and trailers [or chassis, where applicable; i.e., they should include both rail tags and trailer (or chassis) tags]. Refer to Appendices M and C (or D).

9.2.8.2 The rail tags should be placed on the trailer/chassis with horizontal polarization in a position offset horizontally 8 ft longitudinally from the center of the vehicle not to exceed 10 ft, forward on the right and toward the rear on the left. The tags shall be no higher than 8 in. above the bottom rail of the vehicle.

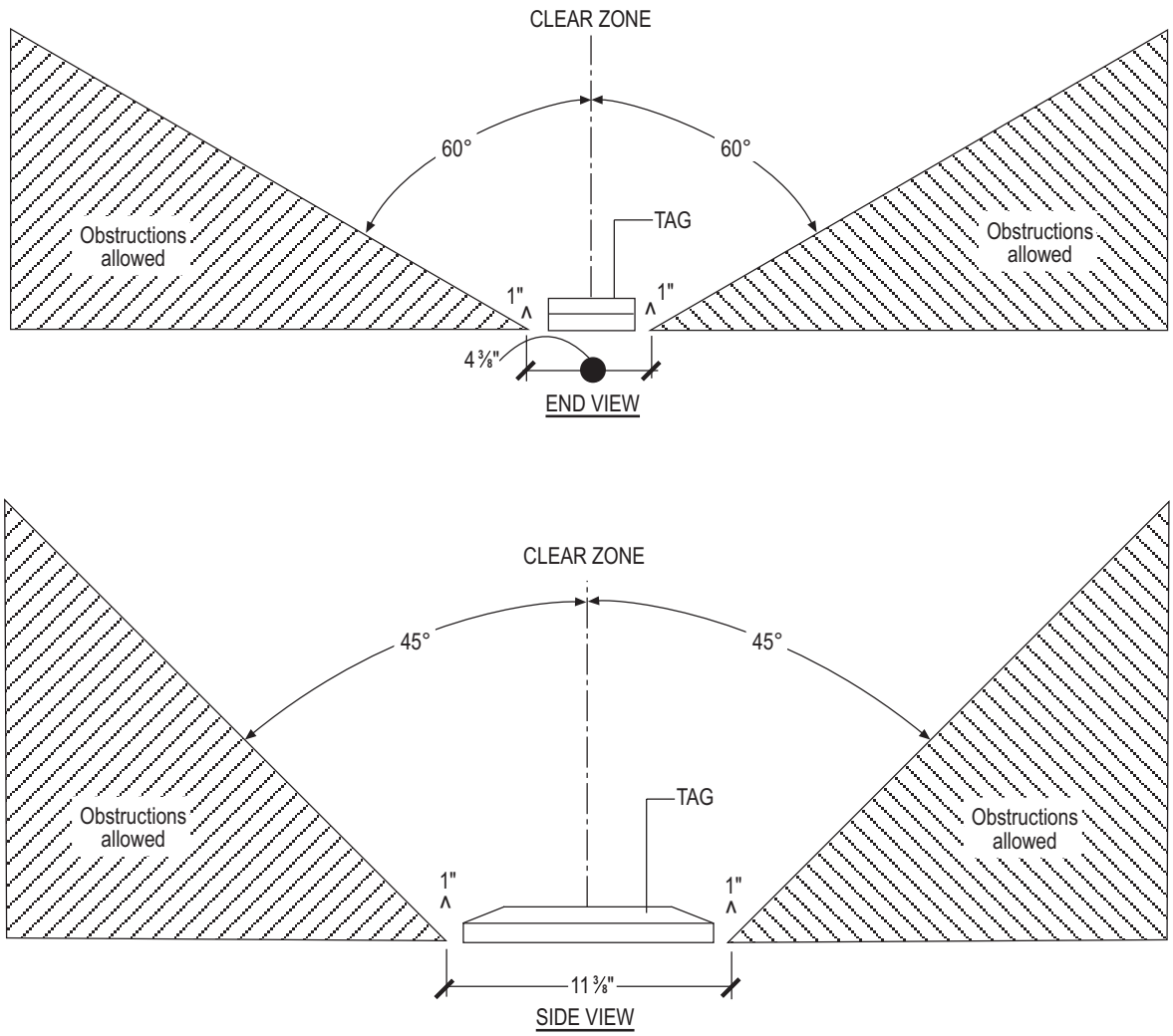

Fig. 9.2 Tag mounting clearance zone railcars and locomotives

9.2.8.3 The trailer/chassis tag for the vehicle should be placed as specified in paragraph 9.5 or paragraph 9.6.

9.2.8.4 The rail trucks (bogies) should be tagged as railcars. (Refer to paragraphs 9.2.1 through 9.2.4 for tag mounting requirements and to Standard S-918A, "AEI Site-to-Host Consist Report Format," for tag contents.) For the rail trucks, BL and AR tags should be placed on brackets

attached to a truck component. The method of tag attachment to the bogie shall be approved by the AAR Equipment Engineering Committee. Refer to Exhibit K for tag location.

9.2.8.5 The coupler mate for these vehicles should be tagged as railcars. (Refer to paragraphs 9.2.1 through 9.2.4 for tag mounting requirements.) For the coupler mate, BL and AR tags should be placed on the coupler mate structure as far from the coupler as possible, as indicated in Exhibit L. A typical mounting bracket is shown in Exhibit L.

9.3 End-of-Train Devices

9.3.1 Each end-of-train device shall be affixed with one tag. Tags should not be placed on any surface that results in an angle from the centerline of the car of less than 170° or more than 210°. (Refer to Fig. 9.3, which depicts a right-side application. For a left-side application, the diagram should be transposed.)

9.3.2 Subject to the above, tag placement on the left side is preferable on many current EOT designs as a result of the availability of adequate tag mounting surfaces. However, on any EOT designs that present equally suitable mounting locations on both sides or a better location on the right side, the tag should be placed on the right side to enhance readability. Sample recommended mounting configurations are presented in Exhibit C.

9.3.3 The tag shall be mounted such that it will respond to a horizontally polarized interrogating signal (long axis parallel to the rail).

9.3.4 Tags with performance equivalent to that of an End-of-Train Device tag as described in paragraph 6.0 shall be used in this application.

9.3.5 Effective January 1, 1995, tags used in this application are required to meet the approval requirements of paragraph 10.0 and S-060, Application for Component Approval Procedures. Due to the specialized nature of this application, EOT tags are not required to meet the tag requirements specified in the Recommended Test Protocol referenced in paragraph 2.2.1.

9.3.6 However, EOT tags should be applied such that they will survive an impact of 168 inch-pounds. For example, this may be accomplished by placing tags in a protective case or inside the EOT device itself. These applications must be approved by the tag manufacturer to ensure that tag readability is not degraded.

9.4 Containers

9.4.1 General

9.4.1.1 Tags shall be mounted so as to maximize readability. The “Clear Zone” (see Fig. 9.3) surrounding the tags and toward the wayside must not be obstructed by any metallic object(s) or protrusion(s). Any obstructions in the “Clear Zone” may introduce reading problems with the tags.

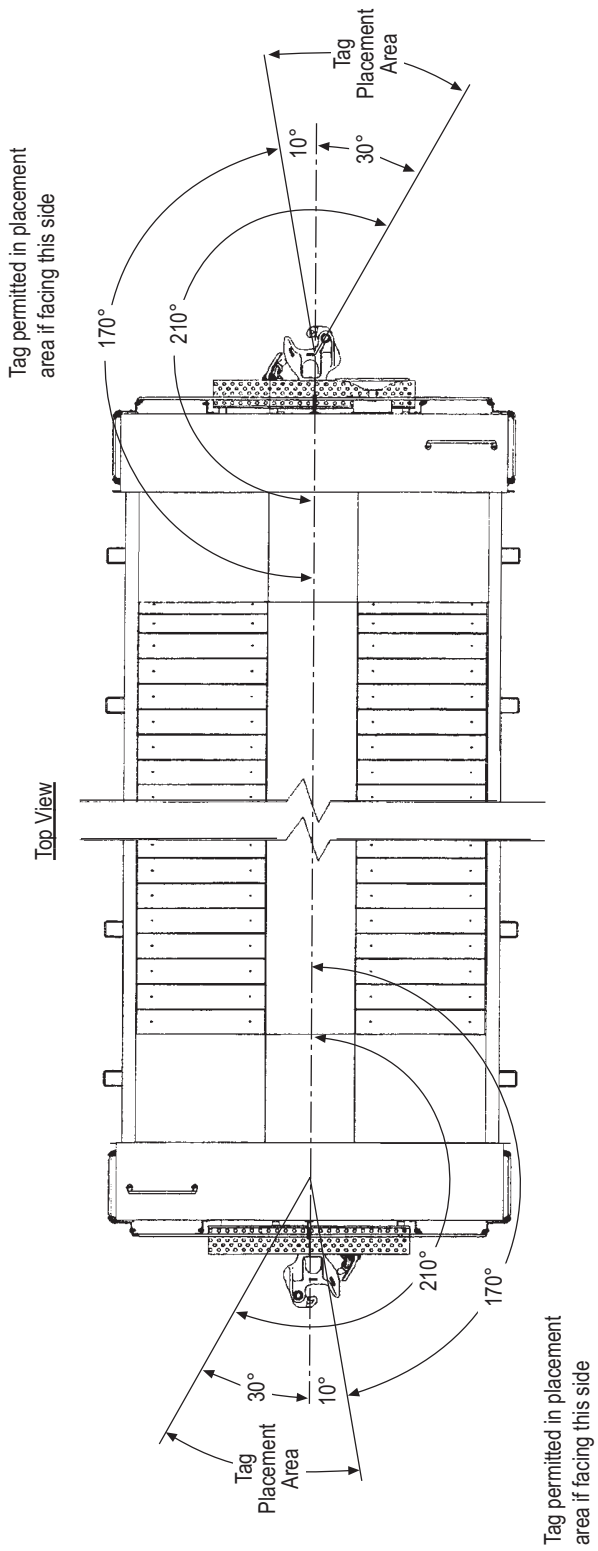

Fig. 9.3 Acceptable application areas of the tag

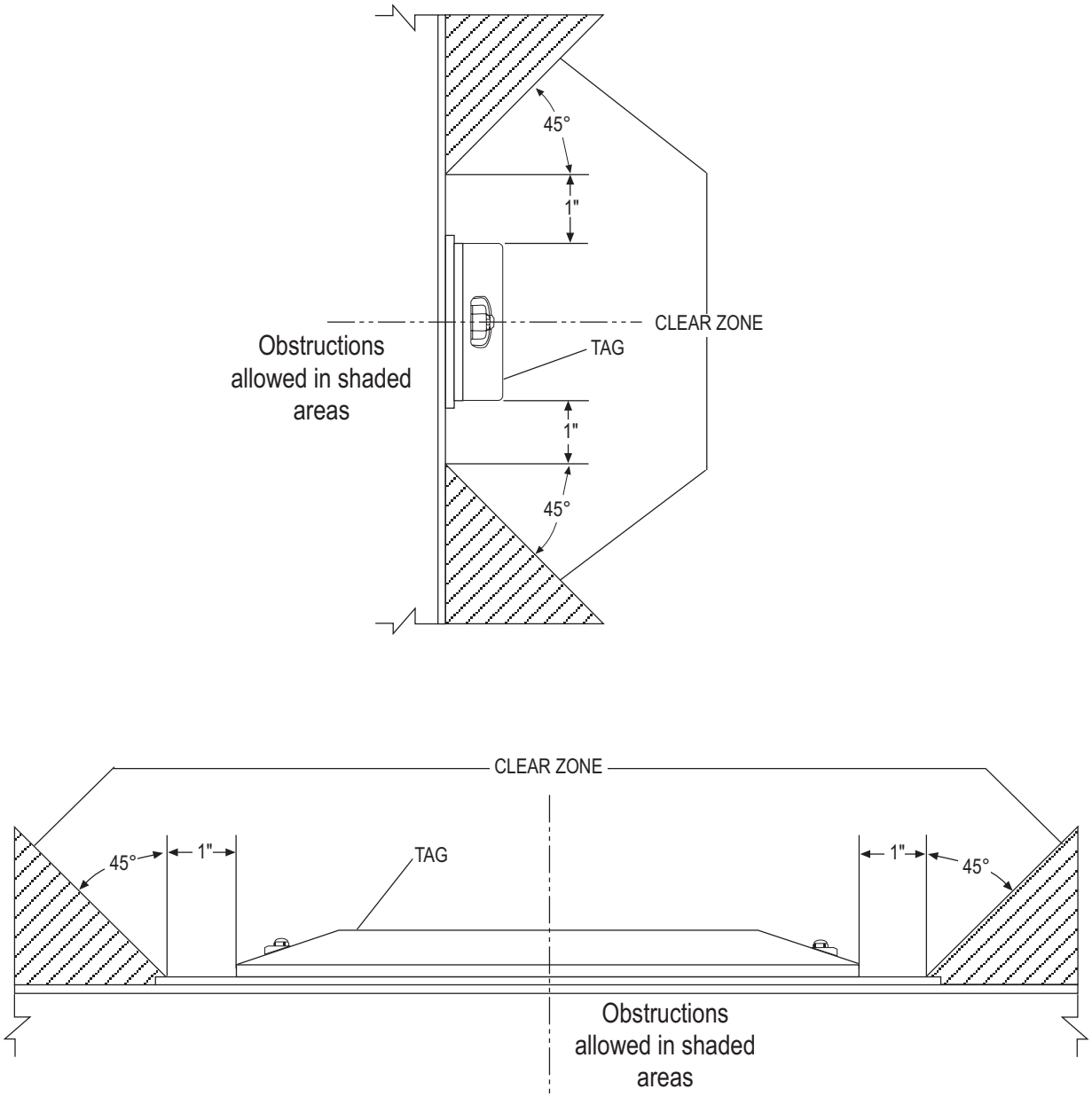

Fig. 9.4 Tag mounting clearance zone battery-powered tags

9.4.1.2 To allow for unobstructed transmission of data, tags must be afforded horizontal and vertical "clearance windows" of 1 in. on each side. These windows radiate out at 45° from the ends and the sides of the tags, as depicted in Fig. 9.4. No part of the container structure or attachments may extend into the clearance zones as depicted to include 1 in. from the periphery of the tag.

9.4.1.3 Tags shall be mounted such that they will respond to a vertically polarized interrogating signal.

9.4.1.4 Tags with performance equivalent to that of a battery tag described in paragraph 6.0 shall be used for this application.

9.4.2 Van-Type Containers 40 ft Long or Less

The tag shall be located on the forward right sidewall of the container, approximately 1 ft to the rear of the front corner post within the first corrugation (if applicable), centered 1 ft below the roof line of the vehicle (see Exhibit D).

9.4.3 Van-Type Containers More than 40 ft Long

The tag must be adjacent to the rearward side of the post at the forward 40-ft corner lock position (see Exhibit D).

9.4.4 Flat Rack Containers

9.4.4.1 Flat Racks with a Bulkhead (Fixed or Retractable)

The tag should be located on the forward right bulkhead, facing outward toward the right side of the vehicle, centered and as high as possible on the bulkhead. The tag shall be vertically polarized when the bulkhead is raised. It must be mounted on a flat metal surface or bracket.

9.4.4.2 Flat Racks with No Bulkhead

The tag shall be located on the *rear* of the right side of the flat rack. The tag shall be horizontally polarized. It must be mounted on a flat metal surface or bracket.

9.4.5 Soft-Sided Containers

The tag, with a fixed metal backing plate at least as large as the tag, shall be attached to the fabric in the area specified for the van-type container.

9.5 Chassis and Flatbed Trailers

9.5.1 Tags shall be mounted so as to maximize readability. The “Clear Zone” (see Fig. 9.4) surrounding the tags and toward the wayside must not be obstructed by any metallic object(s) or protrusion(s). Any obstructions in the “Clear Zone” may introduce reading problems with the tags.

9.5.2 To allow for unobstructed transmission of data, tags must be afforded horizontal and vertical “clearance windows” of 1 in. on each side. These windows radiate out at 45° from the ends and sides of the tags, as depicted inFig. 9.4. No part of the chassis or trailer structure or attachments may extend into the clearance zones as depicted to include 1 in. from the periphery of the tag. An exception, however, is when the tag is placed forward of the landing leg (see paragraph 9.5.5.1); no clear zone beyond a 1-in. perimeter is required *above* the tag.

9.5.3 Tags with performance equivalent to that of a battery tag described in paragraph 6.0 shall be used for this application.

9.5.4 Preferred Location

The tag shall be located in the right front corner of the forward bolster. It will be oriented at a 45° angle toward the corner with a horizontal polarization. Its height shall not exceed 12 in. from the bottom of the fifth wheel plate. It must be mounted on a flat metal surface or bracket (see Exhibit E).

9.5.5 Alternate Locations

For equipment where the above location is not feasible, either of the following locations may be utilized.

9.5.5.1 Forward of Landing Leg (see Exhibit F)

- Forward of right landing leg
- Oriented at a 45° angle (±5°) toward the right front corner
- Horizontal polarization
- Tag must be within 12 in. vertically of the bottom of fifth wheel plate
- Tag must be mounted on a flat metal surface or bracket

9.5.5.2 Forward Bolster (see Exhibit G) (Previous Standard)

- Right front corner—forward bolster, not more than 24 in. from the corner
- Oriented in forward direction
- Height not to exceed 12 in. above bottom of fifth wheel plate
- Must be mounted on a flat metal surface or bracket
- Tag must be mounted such that it will respond to a horizontally polarized interrogating signal

9.6 Trailers

9.6.1 Tags shall be mounted so as to maximize readability. The "Clear Zone" (see Fig. 9.4) surrounding the tags and toward the wayside must not be obstructed by any metallic object(s) or protrusion(s). Any obstructions in the "Clear Zone" may introduce reading problems with the tags.

9.6.2 To allow for unobstructed transmission of data, tags must be afforded horizontal and vertical "clearance windows" of 1 in. on each side. These windows radiate out at 45° from the ends and sides of the tags, as depicted in Fig. 9.4. No part of the equipment structure or attachments may extend into the clearance zones as depicted to include 1 in. from the periphery of the tag.

9.6.3 Tags with performance equivalent to that of a battery tag described in paragraph 6.0 shall be used for this application.

9.6.4 Van-Type Trailers

When possible, the tag shall be located on the forward right sidewall of the trailer approximately 1 ft to the rear of the front of the trailer, centered 1 ft below the roof line (see Exhibit H). When in this location, trailer tags shall be mounted such that they will respond to a vertically polarized interrogating signal.

9.6.5 Soft-Sided Trailers

The tag, with a fixed metal backing plate at least as large as the tag, shall be attached to the fabric in the area specified for the van-type trailer.

9.6.6 Other Trailers

For flatbed and other trailers where the above recommended location is not available or feasible, refer to paragraph 9.5, Chassis and Flatbed Trailers, above.

9.7 Generator Sets, Nitrogen Clips, or Separable Refrigeration Units

9.7.1 Tags shall be mounted so as to maximize readability. The "Clear Zone" (see Fig. 9.4) surrounding the tags and toward the wayside must not be obstructed by any metallic object(s) or protrusion(s). Any obstructions in the "Clear Zone" may introduce reading problems with the tags.

9.7.2 To allow for unobstructed transmission of data, tags must be afforded horizontal and vertical "clearance windows" of 1 in. on each side. These windows radiate out at 45° from the ends and sides of the tags, as depicted in Fig. 9.4. No part of the equipment structure or attachments may extend into the clearance zones as depicted to include 1 in. from the periphery of the tag.

9.7.3 A vertically polarized intermodal-type tag having performance equivalent to that of a battery tag described in paragraph 6.0 shall be used for this application.

9.7.4 Front-Mounted Units

The tag shall be placed on the left side, 1 ft down from the top of the unit. The tag shall be vertically polarized and must be mounted on a flat metal surface or bracket.

9.7.5 Underslung Units

The tag shall be placed on the right (panel) side toward the top of the unit. The tag shall be horizontally polarized and must be mounted on a flat metal surface or bracket.

Siemens EX1030
Page 24 of 177

9.8 Railcar Covers, Roofs, and Hoods

9.8.1 Tag Type and Polarization

A vertically polarized intermodal-type tag having performance equivalent to that of a battery tag described in paragraph 6.0 shall be used for this application.

9.8.2 Location

9.8.2.1 Tags for this equipment shall be placed so as to be read using a standard intermodal antenna placed approximately 10 ft above top of rail. This will avoid interference with the standard tags on the car and will enable reading with a standard intermodal antenna.

9.8.2.2 One tag per car cover section should be used. There may be as many as three or more cover sections per car.

9.8.2.3 The tags shall be located in a window from 7 to 10 ft above top of rail and within 2 ft (a 4-ft window) of the lateral centerline of the cover. The short face of the tag should be parallel to the rail and the long face perpendicular to the rail (i.e., vertical polarization). The long face of the tag may be angled to face upward a maximum of 30° but must not face downward (see Exhibit I).

9.8.2.4 For two-piece covers, the tags should be mounted on the right side of the cover when viewed from the end of the car (this will put the cover tags in opposite corners from the railcar tags). For mid-section covers (for those covers consisting of three or more sections), the tags may be mounted on either side. In all cases, locations of cover stacking posts and other areas that might subject the tags to damage should be avoided.

9.8.2.5 Tags shall be mounted so as to maximize readability. The “Clear Zone” (see Fig. 9.4) surrounding the tags and toward the wayside must not be obstructed by any metallic object(s) or protrusion(s). Any obstructions in the “Clear Zone” may introduce reading problems with the tags.

9.8.2.6 To allow for unobstructed transmission of data, tags must be afforded horizontal and vertical “clearance windows” of 1 in. on each side. These windows radiate out at 45° from the ends and sides of the tags, as depicted in Fig. 9.4. No part of the equipment structure or attachments may extend into the clearance zones as depicted to include 1 in. from the periphery of the tag. An exception, however, is that, when required, the 45° vertical clearance angle below the tag may be violated, but the 1-in. spacing to the nearest obstruction below the tag must not be reduced.

9.9 Tag Application Procedure

9.9.1 Fastening Methods

Application of tags to vehicles, equipment, and/or brackets by use of tape, adhesive, or similar products is prohibited. The use of self-tapping drive screws also is prohibited. It is required that mechanical fasteners be used in this application.

9.9.2 When an attachment plate is welded to a vehicle side sheet, it must be kept flat. If the vehicle side sheet is deformed, spacing of welds may vary to accommodate waviness of the vehicle side.

9.9.3 The attachment plate must be allowed to cool after welding before applying the transponder.

9.9.4 Painting of AEI tags with paint not approved by the manufacturer is prohibited.

9.9.5 When painting tag attachment plates, the studs should be protected from paint.

9.9.6 Rivet Mounting

9.9.6.1 Using appropriate pop rivets that are compatible with the vehicle structure, attach the tag to a bracket or metal mounting surface. Pop-type rivet applications to brackets should be as depicted in Fig. 9.4 using a hat-shaped backing plate with pop-rivets. Rivets should be 3/16-in. diameter with a minimum 1/2-in. head diameter. High-pressure rivets are not recommended.

Siemens EX1030
Page 25 of 177

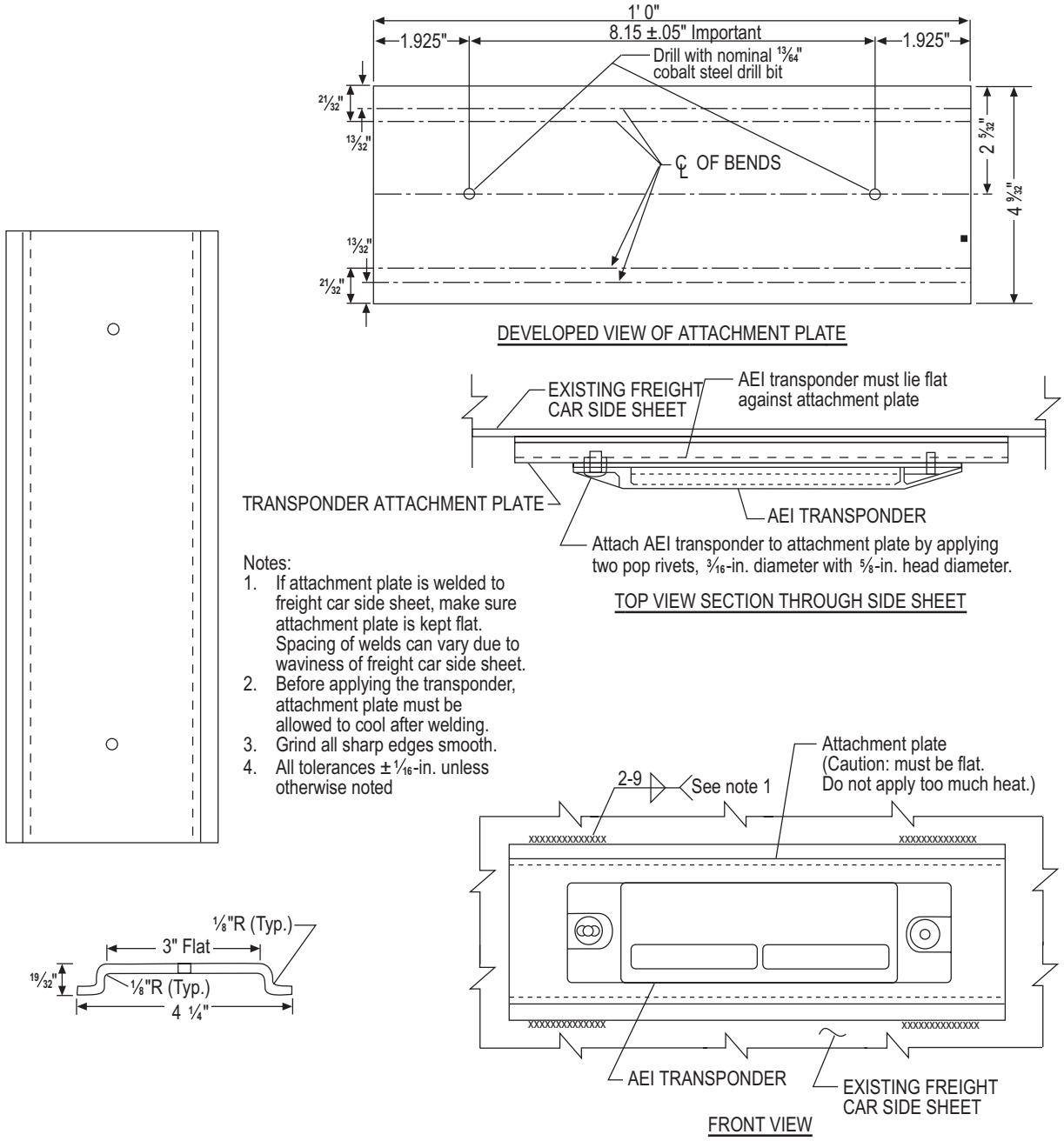

Fig. 9.5 Transponder pop rivet application detail

9.9.6.2 Use pop rivets with a proper grip range and of a type such as the following:

Table 9.1 Acceptable pop rivets

SD66BSLF	Grip Range 1/4" to *3/8"*
SD68BSLF	Grip Range *3/8"* to 1/2"
SD61OBSLF	Grip Range 1/2" to 5/8"
SD612BSLF	Grip Range 5/8" to 3/4

9.9.6.3 Two washers per tag are recommended.

9.9.7 Mounting with Bolts or Threaded Securements

9.9.7.1 Bolted applications to brackets should be as depicted in Fig. 9.6, with small-flange-type mechanical lock nuts or equivalent fasteners for use with No. 10-24 NC threaded studs. Locknuts or equivalent locking features are recommended. Threadsealers, such as Lock-tite®, should not be used unless they have been approved for use by the AAR.

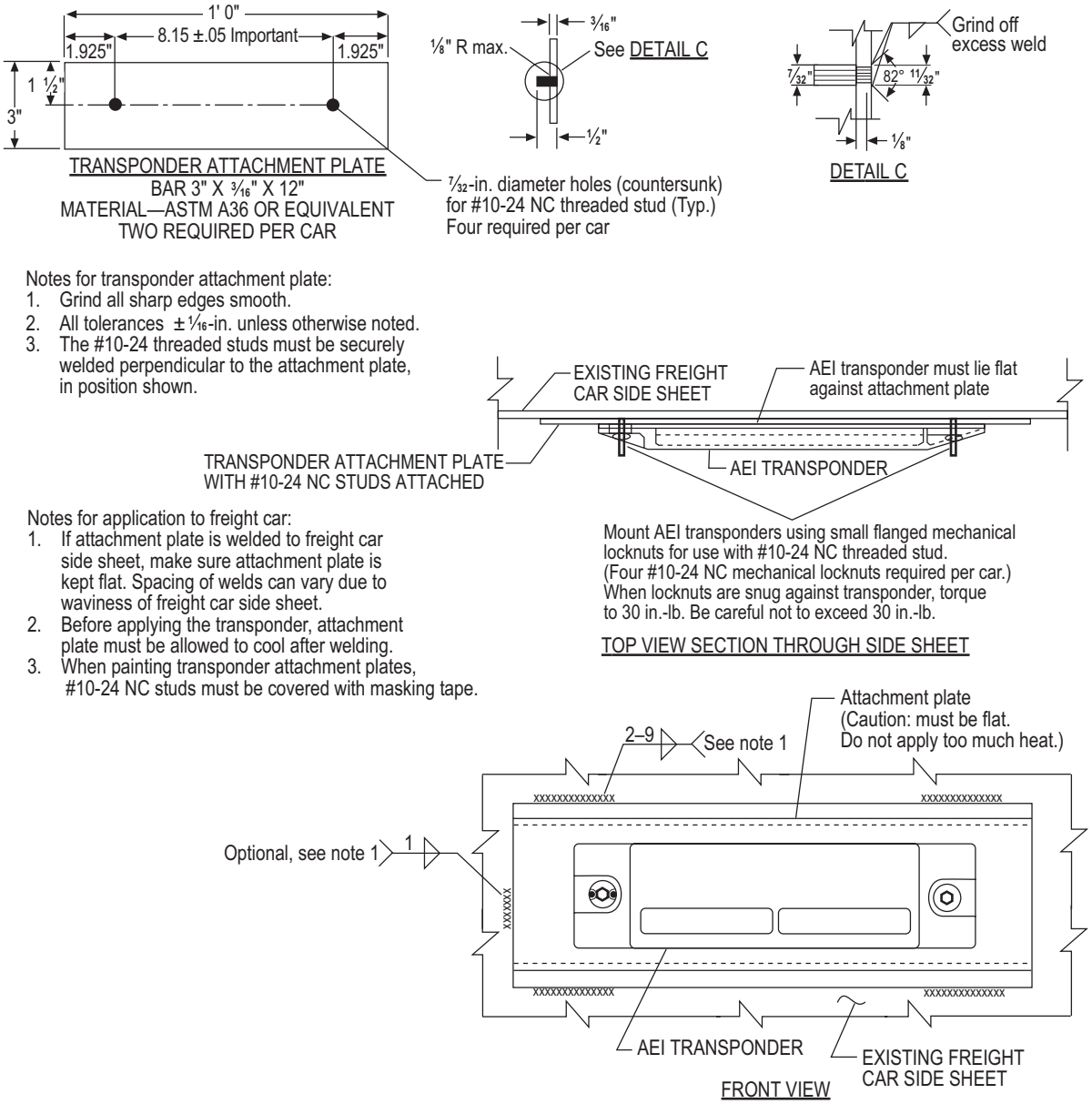

Fig. 9.6 Details and application of AEI transponder bolted application

9.9.7.2 Extreme caution must be used if tags are attached with bolts or threaded connections. To avoid damaging tags, nuts should be properly torqued to no more than 30 in-lb. If excessive torque is applied, the tag case may crack or break.

9.9.7.3 Attachment bolts should not be distorted by chisel-checking or welding.

9.10 Request for Tag Placement Variances

9.10.1 Equipment owners who cannot reasonably place the tags within the limits of the specified tag location window described in this standard must send a written request for a variance to the Director, Freight Car Construction and Components, Mechanical Division, Association of American Railroads, 50 F Street, N.W., Washington, DC 20001 (Fax 202–639–2179).

9.10.2 The request must include the following documentation explaining why the variance is necessary:

- List of the equipment initial and numbers (or series) affected
- Name of the car builder
- Model of the equipment
- Cover letter including explanation of why the tags cannot reasonably be placed inside the specified location window and description of proposed alternative location
- Diagrams, drawings, and photographs to the extent necessary to show why the tags cannot reasonably be placed inside the specified location window
- Explanation, diagrams, drawings, and photographs to the extent necessary to show how the tags would be placed in the proposed alternative location.

A response to each request will be provided. Exemptions that have been granted will be published in paragraph 9.11 of this document or by Mechanical Division Circular Letter.

9.11 Variances to Standard Tag Placement Window

Equipment Affected		Tag May Be Placed
9.11.1		
DTTX 64000 and 74000 series double-stack cars		Longitudinally: As much as 4 ft toward the center of the car, measured from the centerline of the inside axle
TTAX 653000–654404		On side sill approximately 1 ft 11 3/4 in. from centerline of bolster toward end of car.
9.11.2		
CP/CPLX	382000–382995	Approximately 43.5 in. from centerline of track
CP	383700–383802	
CP/CPLX	383850–383999	
CP	384000–384999	
CP	385250–385258	
CP	385600–385619	
CP	386000–386889	

Equipment Affected		Tag May Be Placed
9.11.3		5 ft 6 in. above the rail, contingent on the tag being positioned with a downward tilt of 20° with a tolerance of + 10°, –0°
ATSF	18426	
	307500–307999	
	311000–311899	
	312300–313799	
	315200–315799	
BN	469649–469999	
	471000–472499	
CNW	170000–170926	
	173000–174899	
	178000–179099	
	181000–182699	
	190000–190983	
	438000–438187	
	470030–471106	
	752000–753896	
UP	87200–88349	
9.11.4		
JMHX	005116–008099	Under all circumstances, tag must be mounted in window located at least 100 in., but not more than 118 in., from the structural end of the car. In the vertical dimension, the tag must be mounted no more than 12 in. from the bottom of the side sill.
	057424–057444	
	057447–057488	
	057490–057593	
	057595–057626	
	072701–072741	
9.11.5		
ATSF	298946–298964	14 in. from centerline of car, 60 in. from centerline of inboard axle, and center of tag 32 in. above top of rail.
	298966–298968	
	298970–298974	
	298976–298987	
	298989–298993	
	298995–298998	
9.11.6		
BN	94001–94124	Beam (nonbattery) tags as described in paragraph 6.2 (railcar covers for coil steel cars) shall be placed *horizontal* 2 ft to the left of the centerline of the cover on each side of the cover at the minimum height sufficient to achieve the required tag read clearances, angled downward 20°.

10.0 APPROVAL REQUIREMENTS

This section applies to tag designs that are approved for use in interchange service. Equipment owners may choose to use other tags in addition to those required by the interchange rules for supplementary applications.

10.1 Approval of Tags

All new tag designs and changes to existing tag designs that are approved for use in interchange service must be approved by the Equipment Engineering Committee, Mechanical Division. Each tag design shall be identified by type. The approval shall remain in effect as long as no changes are made in the tags or in the specification requirements.

10.2 Facility Certification

As a minimum, all tags must be manufactured in a facility certified as meeting or exceeding AAR Quality Assurance Specification M-1003.

10.3 Design or Manufacturing Changes

10.3.1 Changes to Tags

If a manufacturer desires to make any changes in an AAR-approved tag, the manufacturer shall advise the Director—Freight Car Construction and Components, providing full information as to the nature of the proposed change and the reason for the change. If a new issue of a drawing or specification is made for the purpose of clarifying or correcting it, notice shall also be provided. The Equipment Engineering Committee will decide in each case what action is to be taken on these changes and, in the event they are approved, the appropriate documentation describing the change (e.g., drawing(s) and specification) will be included with the approval record.

10.3.2 Changes to Specification

If changes are made in the specification, the Equipment Engineering Committee will take the necessary action to determine whether approved tags conform to the changed specification.

10.3.3 Certification of Approval

A manufacturer shall furnish to each purchaser of tags covered by AAR approval a guarantee that the tags furnished are the same as those covered by the approval.

10.3.4 Configuration Control Procedure

Configuration of tags shall be controlled in accordance with Military Standard 481, latest revision.

10.4 Tag Reconditioning Requirements

This section applies to tags that have the programming port plug removed for any reason.

10.4.1 Facility Certification

As a minimum, all tags must be reconditioned in a facility certified to AAR Quality Assurance Specification M-1003.

10.4.2 Tag Inspection

Each tag shall be inspected. The tag shall be scrapped for the following defects:

- Physical damage to the tag, including deformity, dent, scrape, or gouge in the tag case.
- Cracks anywhere on the tag case.
- Deformity of the tag plug hole, including oval shape or scoring.
- Any indication of the presence of water in the tag (e.g. condensation or white residue).
- Tag more than 5 years old measured from the date of manufacture on the face of the tag (year is the second two digits from the left; see paragraph 2.2.1.4).

Siemens EX1030
Page 30 of 177

10.4.3 Leak Test

Each tag shall be leak tested. The leakage shall not result in a pressure drop exceeding .25 psig in 15 seconds when the tag is pressurized to 5.0 psig. Measurement accuracy shall be ±0.1 psig.

10.4.4 Radio Frequency Functional Test

The tag shall respond properly when subjected to an RF field of 3.5 V/m.

A typical RF functional test fixture is described below:

- Using off-the-shelf components from Amtech, this RF test station can be constructed and incorporated into a tag programming workstation. The components include the following:
- Amtech AI1200 reader
- Amtech AR2200 RF unit
- RF attenuator (around 18dB)
- Amtech AA3140 log periodic antenna
- Wooden support (similar to drawing)

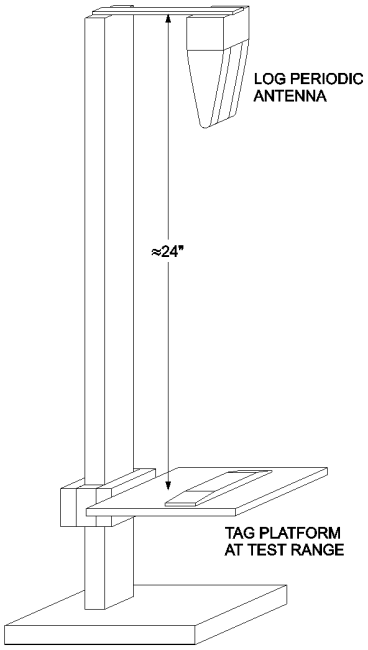

Fig. 10.1 Tag platform at test range

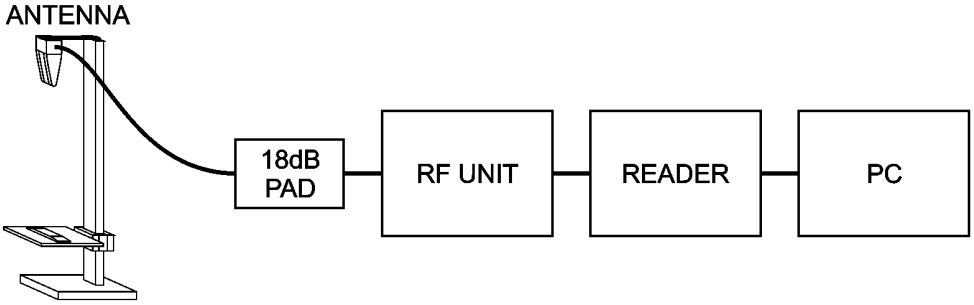

Fig. 10.2 Tag platform with typical electronic configuration

APPENDIX A
TAG DATA FORMAT FOR THE RAILCAR

INCLUDES REVENUE AND NONREVENUE FREIGHT AND PASSENGER EQUIPMENT: EXCLUDES RAIL-COMPATIBLE MULTI-MODAL EQUIPMENT—USE APPENDIX M; EXCLUDES PASSENGER CAB CONTROL CARS AND POWERED MULTIPLE UNIT CARS—USE APPENDIX B

1.0 BITS AVAILABLE FOR GENERAL USE

Fields specified by the standard are listed in Table A.1; General Use fields are indicated in **bold** type. A description of each General Use field is presented in the paragraphs following Table A.1.

Table A.1 Data field descriptions for the Railcar tag

Entry	Bits Required	Tag Data Sequences	Minimum Value	Maximum Value	Unit
Equipment Group Code	**5**	**0–4**	**0**	**31**	**Type Code**
Tag Type	**2**	**5–6**	**1**	**4**	**Type Code**
Equipment Initial (Mark)	**19**	**7–25**	**A**	**ZZZZ**	**Alpha**
Car Number	**20**	**26–45**	**0**	**999999**	**Numeric**
Side Indicator Code	**1**	**46**	**0**	**1**	**Side Code**
Length	**12**	**94–96,**	**0**	**4095**	**Decimeters**
		47–55*	**[0**	**1343**	**Feet]**
Number of Axles	**5**	**56–59, 64**	**1**	**32**	**Axles**
First Check Sum	2	60–61			
Reserved Frame Marker	2	62–63			
Bearing Type Code	**3**	**65–67**	**0**	**7**	**Type Code**
Platform Identifier Code	**4**	**68–71**	**0**	**15**	**Platform Code**
Spare	**22**	**72–93**			**Available for Owner's Use**
Reserved	9	97–105			Reserved for Future Use by AAR
Security	12	106–117			Reserved for Security or Limited Owner's Use
Data Format Code	6	118–123	0	63	Format Code
Second Check Sum	2	124–125			
Frame Marker	2	126–127			

* Bit order shall be 94, 95, 96, 47, 48...55.

The fields are arranged in a hierarchical fashion in order to expedite processing by the data processor. It is intended that the data processor will first look at the Data Format code to determine if the tag should be ignored. For example, in some cases the data processor will wish to ignore all tags except those specified as rail (AAR standard) or intermodal tags.

Once the Data Format code has been processed, then the data processor will look to the Tag Type to determine the configuration, capabilities, and memory capacity of the tag. Next, the data processor will examine the Equipment Group code to determine if the tagged equipment is relevant.

The order in which the remaining fields are processed will be dictated by the particular application.

1.1 Equipment Group Code

This is a numeric field having a value from 0 to 31 that indicates the general type of equipment. The Equipment Group code for freight and passenger railcars (excluding passenger cab control cars, powered multiple unit cars, and rail-compatible multi-modal freight equipment) is decimal 19 (binary 10011).

1.2 Tag Type

The Tag Type indicates the configuration, capability, and memory size of the tag. Tag Type = 2 describes this tag specified by this AAR standard.

To code the Tag Type value into the tag, the decimal value is reduced by 1 and converted to its base 2 equivalent.

1.3 Equipment Initial (Reference UMLER Columns 3–6)

The Equipment Initial is composed of four letters and can be represented as C1, C2, C3, C4. To code this information in the tag, the possible letters represented by C1 will be assigned to the following decimal values: A = 0, B = 1, C = 2, ...Z = 25. The letters C2, C3, and C4 will be assigned the following values: Blank = 0, A = 1, B = 2, ...Z = 26. This code assignment allows for an Initial of less than four characters, with the actual characters left justified, and the remainder of the field padded with blanks.

Conversion from alpha to numeric would involve the following:

1.3.1 Determine the numeric equivalent of characters C1 through C4. This will result in four numeric values, N1 through N4.

1.3.2 Convert N1 through N4 into one numeric value by using the following formula:

$$\text{Value} = (N1 \times 27^3) + (N2 \times 27^2) + (N3 \times 27) + N4$$

The base 2 equivalent of the decimal number “Value” is stored in the tag's Equipment Initial field.

Conversion from a base 2 tag format back to the four letters would involve the following, where “Value” is the decimal equivalent of the base 2 value in the Equipment Initial field.

1. $N1 = \text{Value}/27^3$ (integer—drop fractions)
2. $N2 = (\text{Value} - (N1 \times 27^3))/27^2$ (integer)
3. $N3 = (\text{Value} - ((N1 \times 27^3) + (N2 \times 27^2)))/27$ (integer)
4. $N4 = \text{Value} - ((N1 \times 27^3) + (N2 \times 27^2) + (N3 \times 27))$
5. Use the letter-to-number assignments referred to above to convert N1 through N4 from a numeric value to its letter equivalent.

1.4 Car Number

The Car Number is encoded into the tag by converting the decimal value from 0 to 999999 to a binary value (a conversion from base 10 to base 2).

1.5 Side Indicator Code

The Side Indicator code indicates whether the tag is installed on the left or right side of a railcar. The right or left side is in reference to a person facing the car from the handbrake end (B end) of the car (see diagram, Exhibit A). The right side of the car is assigned a binary value 1 and left side of the car is assigned a binary value 0.

1.6 Length (Reference UMLER Line 2, Columns 20–24)

The exterior length is measured as specified by the *UMLER Data Specification Manual*. To encode the data into the tag, the metric value from 0 dm to 4095 dm is converted to a base 2 equivalent value. 4095 dm shall also apply to all lengths more than 4095 dm.

Siemens EX1030
Page 33 of 177

1.7 Number of Axles (Reference UMLER Line 3, Column 50)

This field indicates the number of axles on a car. To encode the Number of Axles into the tag, the decimal value from 1 to *32* is reduced by 1 and converted to base 2. The decimal value 32 shall also apply to all numbers of axles greater than 32.

1.8 Bearing Type Code (Reference UMLER Line 3, Column 49)

To encode the Bearing Type code into the tag, the decimal value of 0 through 7 must be converted to the equivalent base 2 value. Table A.2 presents a description of each Bearing Type code value.

Table A.2 Data values for the Bearing Type code

Value	Description
0	Plain bearings
1	Roller bearings, not otherwise classified
2	Roller bearings, inboard
3	Roller bearings, 3-axle truck, 1-axle obstructed ("buckeye design")
4	Roller bearings, plain bearing housing
5	Roller bearings, cylindrical oil filled
6–7	Reserved

1.9 Platform Identifier Code (Reference UMLER Line 4, Column 35)

Table A.3 presents the values assigned to each Platform Identifier code. Nonarticulated or single unit cars shall be assigned the value 0. *All equipment except articulated railcars shall be assigned the value 0.* For multi-unit cars, “B” is assigned to the platform stenciled “B,” and “A” is assigned to the extreme opposite platform. Platforms adjacent to the “B” platform are assigned “C,” “D,” “E,” etc., in a sequential manner for consecutive platforms moving away from the “B” platform. To encode the Platform Identifier code into the tag, the decimal value from 0 to 15 must be converted to its equivalent base 2 value.

Table A.3 Values for the Platform Identifier code

Value	Description
0	All equipment except articulated railcars (includes single platform and nonarticulated cars)
1	“A” platform
2	“B” platform
3	“C” platform
4	“D” platform
5	“E” platform
6	“F” platform
7	“G” platform
8	“H” platform
9	“I” platform
10	“J” platform
11	“K” platform
12	“L” platform
13	“M” platform
14	“N” platform
15	“0” platform—also applies for platforms beyond the 15th

1.10 Spare

This field is an optional area that can be used at the discretion of the owner.

Siemens EX1030
Page 35 of 177

APPENDIX B
TAG DATA FORMAT FOR THE LOCOMOTIVE

INCLUDES PASSENGER CAB CONTROL CARS AND POWERED MULTIPLE UNIT CARS

1.0 BITS AVAILABLE FOR GENERAL USE

Fields specified by the standard are listed in Table B.1. General Use fields are indicated in **bold** type. A description of each General Use field is presented in the paragraphs following Table B.1.

Table B.1 Data field descriptions for the Locomotive tag

Entry	Bits Required	Tag Data Sequences	Minimum Value	Maximum Value	Unit
Equipment Group Code	**5**	**0–4**	**0**	**31**	**Type Code**
Tag Type	**2**	**5–6**	**1**	**4**	**Type Code**
Equipment Initial (Mark)	**19**	**7–25**	**A**	**ZZZZ**	**Alpha**
Locomotive Number	**20**	**26–45**	**0**	**999999**	**Numeric**
Side Indicator Code	**1**	**46**	**0**	**1**	**Side Code**
Length	**9**	**47–55**	**0**	**510**	**Decimeters**
			[0	**167**	**Feet]**
Number of Axles	**5**	**56–59, 64**	**1**	**32**	**Axles**
First Check Sum	2	60–61			
Reserved Frame Marker	2	62–63			
Bearing Type Code	**3**	**65–67**	**0**	**7**	**Type Code**
Spare	**30**	**68–97**			**Available for Owner's Use (for example model number)**
Reserved	8	98–105			Reserved for Future Use by AAR
Security	12	106–117			Reserved for Security or Limited Owner's Use
Data Format Code	6	118–123	0	63	Format Code
Second Check Sum	2	124–125			
Frame Marker	2	126–127			

The fields are arranged in a hierarchical fashion in order to expedite processing by the data processor. It is intended that the data processor will first look at the Data Format code to determine if the tag should be ignored. For example, in some cases the data processor will wish to ignore all tags except those specified as rail (AAR standard) or intermodal tags.

Once the Data Format code has been processed, then the data processor will look to the Tag Type to determine the configuration, capabilities, and memory capacity of the tag. Next, the data processor will examine the Equipment Group code to determine if the tagged equipment is relevant.

The order in which the remaining fields are processed will be dictated by the particular application.

1.1 Equipment Group Code

This is a numeric field having a value from 0 to 31 that indicates the general type of equipment. The Equipment Group code for a locomotive is decimal 5 (binary 00101). This Equipment Group code also includes passenger cab control cars and powered multiple unit cars.

1.2 Tag Type

The Tag Type indicates the configuration, capability, and memory size of the tag. Tag Type = 2 describes this tag specified by this AAR standard.

To code the Tag Type value into the tag, the decimal value is reduced by 1 and converted to its base 2 equivalent.

1.3 Equipment Initial (Reference UMLER Section IV, Columns 3–6)

The Equipment Initial is composed of four letters and can be represented as C1, C2, C3, C4. To code this information in the tag, the possible letters represented by C1 will be assigned to the following decimal values: A = 0, B = 1, C = 2, ...Z = 25. The letters C2, C3, and C4 will be assigned the following values: Blank = 0, A = 1, B = 2, ...Z = 26. This code assignment allows for an Initial of less than four characters, with the actual characters left justified, and the remainder of the field padded with blanks.

Conversion from alpha to numeric would involve the following:

1.3.1 Determine the numeric equivalent of characters C1 through C4. This will result in four numeric values, N1 through N4.

1.3.2 Convert N1 through N4 into one numeric value by using the following formula:

$$\text{Value} = (N1 \times 27^3) + (N2 \times 27^2) + (N3 \times 27) + N4$$

The base 2 equivalent of the decimal number “Value” is stored in the tag's Equipment Initial field.

Conversion from a base 2 tag format back to the four letters would involve the following, where “Value” is the decimal equivalent of the base 2 value in the Equipment Initial field.

1. $N1 = \text{Value}/27^3$ (integer—drop fractions)
2. $N2 = (\text{Value} - (N1 \times 27^3))/27^2$ (integer)
3. $N3 = (\text{Value} - ((N1 \times 27^3) + (N2 \times 27^2)))/27$ (integer)
4. $N4 = \text{Value} - ((N1 \times 27^3) + (N2 \times 27^2) + (N3 \times 27))$
5. Use the letter-to-number assignments referred to above to convert N1 through N4 from a numeric value to its letter equivalent.

1.4 Locomotive Number

The Locomotive Number is encoded into the tag by converting the decimal value from 0 to 999999 to a binary value (a conversion from base 10 to base 2).

1.5 Side Indicator Code

The Side Indicator code indicates whether the tag is installed on the left or right side of a locomotive. The right or left side is in reference to a person facing the same direction as the F end of the locomotive (see diagrams, Exhibit B). The right side of the locomotive is assigned a binary value 1 and left side of the locomotive is assigned a binary value 0.

1.6 Length (Reference UMLER Section IV, Line 2, Columns 20–24)

The exterior length is measured as specified by the *UMLER Data Specification Manual*. To encode the data into the tag, the metric value from 0 to 510 is converted to a base 2 equivalent value.

1.7 Number of Axles (Reference UMLER Section IV, Line 1, Columns 19–22 and Exhibit D, Code D, Second Numeric)

This field indicates the number of axles on a locomotive. To encode the Number of Axles into the tag, the decimal value from 1 to 32 is reduced by 1 and converted to base 2.

Siemens EX1030
Page 37 of 177

1.8 Bearing Type Code (Reference UMLER Section IV, Line 3, Column 49)

To encode the Bearing Type code into the tag, the decimal value of 0 through 7 must be converted to the equivalent base 2 value. Table B.2 presents each Bearing Type code value.

Table B.2 Data values for the Bearing Type code

Value	Description
0	Plain bearings
1	Roller bearings, not otherwise classified
2	Roller bearings, inboard
3	Roller bearings, 3-axle truck, 1-axle obstructed ("buckeye design")
4	Roller bearings, plain bearing housing
5	Roller bearings, cylindrical oil filled
6–7	Reserved

1.9 Spare

The Spare field is an optional area that can be used at the discretion of the owner. For example, it can be used to indicate the locomotive's model number. The model number is encoded into this field as five ASCII six-bit characters. The ASCII six-bit table is listed in Appendix O; the decimal value listed in the table must be converted to base 2 for tag programming.

APPENDIX C
TAG DATA FORMAT FOR TRAILERS

1.0 BITS AVAILABLE FOR GENERAL USE

Fields specified by the standard are listed in Table C.1; General Use fields are indicated in **bold** type. A description of each General Use field is presented in the paragraphs following Table C.1.

Table C.1 Data field descriptions for the Trailer tag

Entry	Bits Required	Tag Data Sequences	Minimum Value	Maximum Value	Unit
Equipment Group Code	**5**	**0–4**	**0**	**31**	**Type Code**
Tag Type	**2**	**5–6**	**1**	**4**	**Type Code**
Owner's Code (Initial)*	**19**	**7–25**	**A**	**ZZZZ**	**Alpha**
Trailer Number	**42**	**26–59, 64–71**	**0**	**ZZZZZZZZ**	**Alpha Numeric**
First Check Sum	2	60–61			
Reserved Frame Marker	2	62–63			
Length	**11**	**72–82**	**0**	**2047**	**Centimeters**
			[0	**806**	**Inches]**
Width	**2**	**83–84**	**0**	**3**	**Width Code**
Tandem Width	**2**	**85–86**	**0**	**3**	**Code**
Type Detail Code	**4**	**87–90**	**0**	**15**	**Type Code**
Forward Extension	**8**	**91–98**	**30**	**284**	**Centimeters**
			[12	**112**	**Inches]**
Tare Weight	**7**	**99–105**	**15**	**141**	**100 kg**
			[33	**310**	**100 lb]**
Height or Security	12	**106–117**	**0**	**511**	**Centimeters**
			[0	**402**	**Half inches]**
Data Format Code	6	118–123			
Second Check Sum	2	124–125			
Frame Marker	2	126–127			

* When the Owner's code is not the same as the Trailer Initial (Mark), use the Trailer Initial (Mark) in this field.

The fields are arranged in a hierarchical fashion in order to expedite processing by the data processor. It is intended that the data processor will first look at the Data Format code to determine if the tag should be ignored. For example, in some cases the data processor will wish to ignore all tags except those specified as rail (AAR standard) or intermodal tags.

Once the Data Format code has been processed, then the data processor will look to the Tag Type to determine the configuration, capabilities, and memory capacity of the tag. Next, the data processor will examine the Equipment Group code to determine if the tagged equipment is relevant.

The order in which the remaining fields are processed will be dictated by the particular application.

Siemens EX1030
Page 39 of 177

1.1 Equipment Group Code

This is a numeric field having a value from 0 to 31 that indicates the general type of equipment. Only major categories of equipment types are indicated in this field, and other fields are allotted to indicate further details. The Equipment Group code for a trailer is a decimal 21 (binary 10101).

1.2 Tag Type

The Tag Type indicates the configuration, capability, and memory size of the tag. Tag Type = 2 describes this tag specified by this AAR standard.

To code the Tag Type value into the tag, the decimal value is reduced by 1 and converted to its base 2 equivalent.

1.3 Owner's Code/Trailer Mark (Reference UMLER Section III, Columns 3–6)

The Owner's Code/Trailer Mark is composed of four letters and can be represented as C1, C2, *C*3, C4. To code this information in the tag, the possible letters represented by C1 will be assigned to the following decimal values: A = 0, B = 1, C = 2, ...Z = 25. The letters C2, C3, and C4 will be assigned the following values: Blank = 0, A = 1, B = 2, ...Z = 26. This code assignment allows for an Owner's code of less than four characters, with the actual characters left justified and the remainder of the field padded with blanks.

Conversion from alpha to numeric would involve the following:

1.3.1 Determine the numeric equivalent of characters C1 through C4. This will result in four numeric values, N1 through N4.

1.3.2 Convert N1 through N4 into one numeric value by using the following formula:

$$\text{Value} = (N1 \times 27^3) + (N2 \times 27^2) + (N3 \times 27) + N4$$

The base 2 equivalent of the decimal number "Value" is stored in the tag's Owner's code field.

Conversion from a base 2 tag format back to the four letters would involve the following, where "Value" is the decimal equivalent of the base 2 value in the Owner's code field.

1. $N1 = \text{Value}/27^3$ (integer—drop fractions)
2. $N2 = (\text{Value} - (N1 \times 27^3))/27^2$ (integer)
3. $N3 = (\text{Value} - ((N1 \times 27^3) + (N2 \times 27^2)))/27$ (integer)
4. $N4 = \text{Value} - ((N1 \times 27^3) + (N2 \times 27^2) + (N3 \times 27))$
5. Use the letter-to-number assignments referred to above to convert N1 through N4 from a numeric value to its letter equivalent.

1.4 Trailer Number

The Trailer Number consists of eight alphanumeric characters. Each character shall be assigned a numeric value as indicated below:

Identification Character	Numeric Value	Identification Character	Numeric Value
-(space)	0	H	18
0	1	I	19
1	2	J	20
2	3	K	21
3	4	L	22
4	5	M	23
5	6	N	24
6	7	O	25
7	8	P	26
8	9	Q	27
9	10	R	28
A	11	S	29
B	12	T	30
C	13	U	31
D	14	V	32
E	15	W	33
F	16	X	34
G	17	Y	35
		Z	36

The value associated with each character position will then form a base 37 number that is 8 digits long. The 8-digit number is encoded into the tag by converting it to its base 2 equivalent.

1.5 Length (Reference UMLER Section III, Line 2, Columns 20–24)

This field indicates the trailer length. The Length field is equivalent to the overall (outside) length of the trailer, including forward protrusion but excluding dock bumpers. To encode the length into the tag, the metric value from 0 to 2047 is converted to its equivalent base 2 value. If a zero is entered for this field, it indicates “does not apply.”

1.6 Width (Reference UMLER Section III, Line 2, Columns 25–28)

The trailer width is measured from the outside surfaces of the trailer. To encode the width into the tag, use the following table:

Table C.2 Width and tandem width codes

Value	Description
0	Not used
1	96 in./2.5 m or less
2	More than 96 in./2.5 m but not more than 102 in./2.6 m
3	More than 102 in./2.6 m

The appropriate decimal value from the table is converted to its base 2 equivalent for encoding into the tag.

1.7 Tandem Width (Reference UMLER Exhibit D, Code Z, Third Numeric)

The Tandem Width indicates the nominal width of the trailer tandem, defined as the extreme width spanned by the outside tires of an axle. (The tandem width is usually 96 in. or 102 in.) To encode the tandem width into the tag, use the same procedure and table given for width, above.

1.8 Type Detail Code (Reference UMLER Section III, Line 1, Columns 19–20 and Exhibit D, Code Z, First Numeric)

To encode the Type Detail code into the tag, the decimal value from 0 to 15 must be converted to the equivalent base 2 value. Table C.3 presents a description of each Type Detail code value. The decimal value 15 represents no Type code provided.

Table C.3 Data values for the Type Detail code

Value	Description
0	Bulk hopper or tank
1	Mechanical refrigerator-underslung
2	General service (nonequipped) dry van
3	Flat bed (including removable sides, platforms and expandables)
4	Open top
5	Mechanical refrigerator—nose mount
6	Rail compatible trailer, without integral rail wheels
7	Insulated
8	Drop frame (including wedge frames)
9	Special equipped straight floor closed
10	Rail compatible trailer, with integral rail wheels (capable of operation on railroads without an underlying flatcar platform)
11–14	Reserved
15	Not used

1.9 Forward Extension (Reference UMLER Section III, Line 4, Columns 77–78)

The Forward Extension field indicates the distance from the center of the kingpin to the most forward protrusion on the trailer. To encode the Forward Extension into the tag, the metric value from 30 cm to 284 cm must be reduced by decimal 29 and then converted to the equivalent base 2 value. If a minimum binary value for this field is entered, it indicates a “does not apply” condition.

1.10 Tare Weight (Reference UMLER Section III, Line 3, Columns 27–30)

This field indicates the trailer's empty weight in hundreds of kilograms or pounds. To encode the Tare Weight into the tag, the metric value from 15 to 141 hundred kilograms must be reduced by decimal value 14 and then converted to its equivalent base 2 value. If a minimum binary value for this field is entered, it indicates a “does not apply” condition.

1.11 Height (Reference UMLER Section III, Line 2, Columns 33–36)

The height of the trailer is indicated by this field, or the field may be used for security characters. If the user does not wish to use security or indicate the trailer height, then this field shall be filled with binary zeros. The Height field is equivalent to the overall (outside) height of the trailer measured vertically from the ground to the top of the trailer at the rear axle position, with the trailer in an unloaded condition and with properly inflated tires. To encode the height into the tag, use the subsequent steps to encode the data. (If inches are entered, the programmer hardware will perform the necessary conversion.)

1. Convert the trailer height decimal value (centimeters) ($D_2D_1D_0$) to a base 37 number (T_1T_0) as follows:

$$C = D_2D_1D_0/37 \text{ (truncate to an integer result)}$$
$$T_1 = C + 1$$
$$T_0 = D_2D_1D_0 - (C \times 37) \text{ (truncate to an integer result)}$$

2. Use the following table to convert (T_1T_0) to two alpha-numeric symbols (A_1A_0)

A_1A_0 Character	T_1T_0 Value	A_1A_0 Character	T_1T_0 Value
/(slash)	0	H	18
0	1	I	19
1	2	J	20
2	3	K	21
3	4	L	22
4	5	M	23
5	6	N	24
6	7	O	25
7	8	P	26
8	9	Q	27
9	10	R	28
A	11	S	29
B	12	T	30
C	13	U	31
D	14	V	32
E	15	W	33
F	16	X	34
G	17	Y	35
		Z	36

3. Using the six-bit ASCII table presented in Appendix O, find the decimal values associated with the A_1 character and the A_0 character. Finally, these decimal values must then be converted to corresponding base 2 values.

APPENDIX D
TAG DATA FORMAT FOR CHASSIS

1.0 BITS AVAILABLE FOR GENERAL USE

Fields specified by the standard are listed in Table D.1. General Use fields are indicated in **bold** type. A description of each General Use field is presented in the paragraphs following Table D.1.

Table D.1 Data field descriptions for the Chassis tag

Entry	Bits Required	Tag Data Sequences	Minimum Value	Maximum Value	Unit
Equipment Group Code	**5**	**0–4**	**0**	**31**	**Type Code**
Tag Type	**2**	**5–6**	**1**	**4**	**Type Code**
Chassis Mark (Initial)	**19**	**7–25**	**A**	**ZZZZ**	**Alpha**
Chassis Number	**20**	**26–45**	**0**	**999999**	**Numeric**
Type Detail Code	**4**	**46–49**	**0**	**15**	**Types**
Tare Weight	**6**	**50–55**	**15**	**77**	**100 kg**
			[33	170	**100 lb]**
First Check Sum	2	60–61			
Framing Bits	2	62–63			
Height	**7**	**56–59,**	**40**	**166**	**Centimeters**
		64–66	**[32**	**130**	**Half Inches]**
Tandem Width Code	**2**	**67–68**	**0**	**3**	**Code**
Forward Extension	**6**	**69–74**	**30**	**154**	**Centimeters**
			[12	**61**	**Inches]**
Kingpin Setting	**6**	**75–80**	**30**	**154**	**Centimeters**
			[12	**61**	**Inches]**
Axle Spacing	**5**	**81–85**	**10**	**40**	**Decimeters**
			[39	**157**	**Inches]**
Running Gear Location	**5**	**86–90**	**13**	**43**	**Decimeters**
			[51	**169**	**Inches]**
Number of Lengths	**3**	**91–93**	**0**	**7**	**Numeric**
Minimum Length	**10**	**94–103**	**0**	**2046**	**Centimeters**
			[0	**806**	**Inches]**
Spare	**2**	**104–105**			**Reserved**
Maximum Length or Security	**12**	**106–117**			**Length—Centimeters/See Table**
Data Format Code	6	118–123			
Second Check Sum	2	124–125			
Frame Marker	2	126–127			

The fields are arranged in a hierarchical fashion in order to expedite processing by the data processor. It is intended that the data processor will first look at the Data Format code to determine if the tag should be ignored. For example, in some cases the data processor will wish to ignore all tags except those specified as rail (AAR standard) or intermodal tags.

Once the Data Format code has been processed, then the data processor will look to the Tag Type to determine the configuration, capabilities, and memory capacity of the tag. Next, the data processor will examine the Equipment Group code to determine if the tagged equipment is relevant.

The order in which the remaining fields are processed will be dictated by the particular application.

1.1 Equipment Group Code

This is a numeric field having a value from 0 to 31 that indicates the general type of equipment. Only major categories of equipment types are indicated in this field and other fields are allotted to indicate further details. The Equipment Group code for a chassis is decimal 27 (binary 11011).

1.2 Tag Type

The Tag Type indicates the configuration, capability, and memory size of the tag. Tag Type = 2 describes this tag specified by this AAR standard.

To code the Tag Type value into the tag, the decimal value is reduced by 1 and converted to its base 2 equivalent.

1.3 Chassis Mark (Reference UMLER Section III, Columns 3–6)

The Chassis Mark is composed of four letters and can be represented as C1, C2, *C*3, C4. To code this information in the tag, the possible letters represented by C1 will be assigned to the following decimal values: A = 0, B = 1, C = 2, ...Z = 25. The letters C2, C3, and C4 will be assigned the following values: Blank = 0, A = 1, B = 2, ...Z = 26. This code assignment allows for a Chassis Mark of less than four characters, with the actual characters left justified and the remainder of the field padded with blanks.

Conversion from alpha to numeric would involve the following:

1.3.1 Determine the numeric equivalent of characters C1 through C4. This will result in four numeric values, N1 through N4.

1.3.2 Convert N1 through N4 into one numeric value by using the following formula:

$$\text{Value} = (N1 \times 27^3) + (N2 \times 27^2) + (N3 \times 27) + N4$$

The base 2 equivalent of the decimal number “Value” is stored in the tag's Chassis Mark field.

Conversion from a base 2 tag format back to the four letters would involve the following, where “Value” is the decimal equivalent of the base 2 value in the Chassis Mark field.

1. $N1 = \text{Value}/27^3$ (integer—drop fractions)
2. $N2 = (\text{Value} - (N1 \times 27^3))/27^2$ (integer)
3. $N3 = (\text{Value} - ((N1 \times 27^3) + (N2 \times 27^2)))/27$ (integer)
4. $N4 = \text{Value} - ((N1 \times 27^3) + (N2 \times 27^2) + (N3 \times 27))$
5. Use the letter-to-number assignments referred to above to convert N1 through N4 from a numeric value to its letter equivalent.

1.4 Chassis Number

The Chassis Number is encoded into the tag by converting the decimal value from 0 to 999999 to a binary value (a conversion from base 10 to base 2).

1.5 Type Detail Code (Reference UMLER Section III, Line 1, Columns 19–20 and Exhibit D, Code Z, First and Second Numerics)

To encode the Type Detail code into the tag, the decimal value from 0 to 15 must be converted to the equivalent base 2 value. Table D.2 presents a description of each Type Detail code value. The decimal value 15 includes no Type code provided.

Table D.2 Data values for the Type Detail code—chassis

Value	Description
0	Extendible
1	Straight
2	Combo
3	Beam slider
4	Rail compatible chassis, with integral rail wheels
5	Rail compatible chassis, without integral rail wheels
6	Fixed length gooseneck
7	Platform
8	Drop frame
9	Tri-purpose
10–14	Reserved
15	Others/Not used

1.6 Chassis Type Definitions

Extendible	Chassis capable of expanding or "stretching" to accommodate different size containers.
Straight	Fixed length chassis, also called "flushback," capable of handling one size container; not a gooseneck.
Combo	Fixed length chassis, capable of handling two sizes of containers (also referred to as "eight-pin chassis"). However, in contrast to tri-purpose chassis, additional locking pins are *not* provided to allow an alternate placement location of one smaller size container.
Beam Slider	Chassis capable of expanding or "stretching" to accommodate U.S. Bridge formulas, but not capable of stretching enough to accommodate different size containers.
Rail Compatible Chassis	Chassis capable of operation on railroad without an underlying flatcar platform.
Gooseneck	Chassis with a lowered bed, with a protruding structure to fit in the slot (tunnel) in the bottom of a container. Serves to lower the height of the chassis/container combination to meet clearance requirements. If a gooseneck chassis is also extendible, it should be classified as “Extendible.”
Tri-Purpose (or three-way)	Fixed-length chassis capable of handling two sizes of containers. In addition, additional locking pins are provided to allow an alternate placement location of one smaller size container (also referred to as “twelve-pin chassis”).
Platform	Chassis with a platform at the rear; facilitates unloading.

1.7 Tare Weight (Reference UMLER Section III, Line 3, Columns 27–30)

This field indicates the chassis Tare Weight in hundreds of kilograms. To encode the chassis Tare Weight into the tag, the metric value from 15 to 77 hundred kilograms must be reduced by 14 and then converted to its equivalent base 2 value. If a minimum binary value for this field is entered (i.e., 0), it indicates a “does not apply” condition.

1.8 Height (Reference UMLER Section III, Line 2, Columns 33–36, and Exhibit D, Code Z, Third Numeric)

The chassis height is measured from the ground to the top of the rear bolster excluding locking pins when the chassis is unladen. To encode the height into the tag, the decimal value from 40 to 166 cm must be reduced by decimal value 39 and then converted to the equivalent base 2 value. If a minimum binary value for this field is entered (i.e., 0), it indicates a “does not apply” condition.

1.9 Tandem Width (Reference UMLER Exhibit D, Code Z, Third Numeric)

The Tandem Width field indicates the nominal width of the chassis tandem, defined as the extreme width spanned by the outside tires of an axle. (The Tandem Width is usually 96 in. or 102 in.) To encode the tandem width into the tag, use the following table:

Table D.3 Width and tandem width codes

Value	Description
0	Not used/Other
1	96 in./2.5 m or less
2	More than 96 in./2.5 m but not more than 102 in./2.6 m
3	More than 102 in./2.6 m

The decimal value from the table is converted to its base 2 equivalent for encoding into the tag.

1.10 Forward Extension (Reference UMLER Section III, Line 4, Columns 77–78)

The Forward Extension field indicates the distance from the center of the kingpin forward to the extreme front protrusion of the chassis, including any nose-mounted gooseneck, electrical box, fixed glad hands, or other protrusion. To encode the Forward Extension into the tag, the metric value from 30 cm to 154 cm must be reduced by decimal value 28, divided by two, and then converted to the equivalent base 2 value. If a minimum binary value for this field is entered (i.e., 0), it indicates a “does not apply” condition. If metric values are entered, only even centimeters may be used. (This saves space on the tag.)

1.11 Kingpin Setting (Reference UMLER Section III, Line 4, Columns 46–47)

This is the distance from the center of the kingpin forward to the front of the chassis, but excluding any protrusions such as a gooseneck or electrical box. To enter the value into the tag, follow the same procedure as for Forward Extension, above. If metric values are entered, only even centimeters may be used.

1.12 Axle Spacing

This is the distance between the centers of the rear axles. To encode the tag, the value of 10 dm to 40 dm is reduced by 9 and then converted to the equivalent base 2 value. Use the minimum value (binary 0) for unknown or not used.

1.13 Running Gear Location

This is the distance from the rear of the chassis to the point midway between the two axles. To encode the tag, the value of 13 dm to 43 dm is reduced by 12 and then converted to the equivalent base 2 value. If unknown or not used, use the minimum value (binary 0). If the chassis is a sliding tandem, use the maximum value of 43 dm or 169 in. For beam sliders, use the distance of the running gear location in its normal position.

1.14 Number of Lengths

This field represents the number of different lengths in which the chassis can be configured. Use 0 for not used, and 7 for seven or more lengths. To encode the tag, the value of 0 to 7 should be converted to its equivalent binary value.

1.15 Minimum Length

This field indicates the chassis minimum length. Indicate the actual, nonextended extreme length of the chassis, not the nominal length of container that the chassis can handle. (The actual length is needed in loading the chassis on flatcars.) The minimum length is measured while the chassis is in its fully retracted state. If the chassis is a fixed length, then the minimum length simply equals the chassis length. The length field is equivalent to the overall (outside) length of the chassis, including forward protrusions but excluding dock bumpers.

To encode the chassis length into the tag, the metric value from 0 to 2046 is divided by 2 and then is converted to its equivalent base 2 value. If a minimum binary value for this field is entered (i.e., 0), it indicates a "does not apply" condition. When centimeters are entered, only even values may be used.

1.16 Maximum Length

The Maximum Length of the chassis is identified in this field if the user chooses not to use security characters. If the user does not wish to use security or indicate the maximum length, then this field shall be filled with binary zeros.

To insert Maximum Length, the chassis shall be measured in its fully extended state. In the case of a fixed length chassis, the Maximum Length is equivalent to the chassis length. The Maximum Length is equivalent to the overall (outside) length of the chassis, including forward protrusions but excluding dock bumpers.

To encode the Maximum Length into the tag, the decimal measurement from 0 cm to 2046 cm must first be converted to an even number. The subsequent steps shall then be used to encode the data. (If inches are entered, the programmer hardware will perform the necessary conversion.)

1. Divide the number by 2.
2. Convert the resulting decimal number ($D_3D_2D_1D_0$) to a base 37 number (T_1T_0) as follows:

$$C = D_3D_2D_1D_0/37 \text{ (truncate to an integer result)}$$
$$T_1 = C + 1$$
$$T_0 = D_3D_2D_1D_0 - (C \times 37) \text{ (truncate to an integer result)}$$

3. Use the following table to convert (T_1T_0) to two alpha-numeric symbols (A_1A_0):

A_1A_0 Character	T_1T_0 Value	A_1A_0 Character	T_1T_0 Value
/(slash)	0	H	18
0	1	I	19
1	2	J	20
2	3	K	21
3	4	L	22
4	5	M	23
5	6	N	24
6	7	O	25
7	8	P	26
8	9	Q	27
9	10	R	28
A	11	S	29
B	12	T	30
C	13	U	31
D	14	V	32
E	15	W	33
F	16	X	34
G	17	Y	35
		Z	36

4. Using the six-bit ASCII table presented in Appendix O, find the decimal values associated with A_1A_0. Finally, these decimal values must then be converted to corresponding base 2 values.

APPENDIX E
TAG DATA FORMAT FOR THE END-OF-TRAIN DEVICE

(ALSO INCLUDES MARKER LIGHTS)

1.0 BITS AVAILABLE FOR GENERAL USE

Fields specified by the standard are listed in Table E.1. General Use fields are indicated in **bold** type. A description of each General Use field is presented in the paragraphs following Table E.1.

Table E.1 Data field descriptions for the EOT device tag

Entry	Bits Required	Tag Data Sequences	Minimum Value	Maximum Value	Unit
Equipment Group Code	**5**	**0–4**	**0**	**31**	**Type Code**
Tag Type	**2**	**5–6**	**1**	**4**	**Type Code**
Equipment Initial (Mark)	**19**	**7–25**	**A**	**ZZZZ**	**Alpha**
EOT Number	**20**	**26–45**	**0**	**999999**	**Numeric**
EOT TypeCode	**2**	**46–47**	**0**	**3**	**Type Code**
Side Indicator Code	**1**	**48**	**0**	**1**	**Side Code**
Spare	**41**	**49–59, 64–93**			**Available for Owner's Use**
First Check Sum	2	60–61			
Reserved Frame Marker	2	62–63			
Reserved	12	94–105			Reserved for Future Use by AAR
Security	12	106–117			Reserved for Security or Limited Owner's Use
Data Format Code	6	118–123			
Second Check Sum	2	124–125			
Frame Marker	2	126–127			

The fields are arranged in a hierarchical fashion in order to expedite processing by the data processor. It is intended that the data processor will first look at the Data Format code to determine if the tag should be ignored. For example, in some cases the data processor will wish to ignore all tags except those specified as rail (AAR standard) or intermodal tags.

Once the Data Format code has been processed, then the data processor will look to the Tag Type to determine the configuration, capabilities, and memory capacity of the tag. Next, the data processor will examine the Equipment Group code to determine if the tagged equipment is relevant.

The order in which the remaining fields are processed will be dictated by the particular application.

1.1 Equipment Group Code

This is a numeric field having a value from 0 to 31 that indicates the general type of equipment. Only major categories of equipment types are indicated in this field and other fields are allotted to indicate further details. The Equipment Group code for an End-of-Train Device is decimal 6 (binary 00110).

1.2 Tag Type

The Tag Type indicates the configuration, capability, and memory size of the tag. Tag Type = 2 describes this tag specified by this AAR standard.

Siemens EX1030
Page 49 of 177

To code the Tag Type value into the tag, the decimal value is reduced by 1 and converted to its base 2 equivalent.

1.3 Equipment Initial (Reference UMLER Section V, Columns 3–6)

The Equipment Initial is composed of four letters and can be represented as C1, C2, C3, C4. To code this information in the tag, the possible letters represented by C1 will be assigned to the following decimal values: A = 0, B = 1, C = 2, ...Z = 25. The letters C2, C3, and C4 will be assigned the following values: Blank = 0, A = 1, B = 2, ...Z = 26. This code assignment allows for an Initial of less than four characters, with the actual characters left justified, and the remainder of the field padded with blanks.

Conversion from alpha to numeric would involve the following:

1.3.1 Determine the numeric equivalent of characters C1 through C4. This will result in four numeric values, N1 through N4.

1.3.2 Convert N1 through N4 into one numeric value by using the following formula:

$$\text{Value} = (N1 \times 27^3) + (N2 \times 27^2) + (N3 \times 27) + N4$$

The base 2 equivalent of the decimal number “Value” is stored in the tag's Equipment Initial field.

Conversion from a base 2 tag format back to the four letters would involve the following, where “Value” is the decimal equivalent of the base 2 value in the Equipment Initial field.

1. $N1 = \text{Value}/27^3$ (integer—drop fractions)
2. $N2 = (\text{Value} - (N1 \times 27^3))/27^2$ (integer)
3. $N3 = (\text{Value} - ((N1 \times 27^3) + (N2 \times 27^2)))/27$ (integer)
4. $N4 = \text{Value} - ((N1 \times 27^3) + (N2 \times 27^2) + (N3 \times 27))$
5. Use the letter-to-number assignments referred to above to convert N1 through N4 from a numeric value to its letter equivalent.

1.4 EOT Number

The EOT Number is encoded into the tag by converting the decimal value from 0 to 999999 to a binary value (a conversion from base 10 to base 2).

1.5 EOT Type

This field provides a generic description of the EOT device. The appropriate value from Table E.2 should be converted to base 2 and encoded into the tag.

Table E.2 Data values for EOT Type code

Decimal Value	Description
0	EOT
1	EOT (alternate code use)
2	EOT (alternate code use)
3	Marker light (generally includes brake pressure gauge)—UMLER Code 95—NL/NLU

1.6 Side Indicator Code

The Side Indicator code indicates whether the tag is installed on the left or right side of the EOT. The left or right is determined in reference to a person standing behind and facing an EOT properly mounted on a train. The right side is assigned a binary value 1 and the left side is assigned a binary value 0.

APPENDIX F
TAG DATA FORMAT FOR THE INTERMODAL CONTAINER

1.0 BITS AVAILABLE FOR GENERAL USE

Fields specified by the standard are listed in Table F.1. General Use fields are indicated in **bold** type. A description of each General Use field is presented in the paragraphs following Table F.1.

The procedures and definitions of how to measure the containers' physical characteristics specified in Table F.1 are documented in publications of the International Standards Organization.

Table F.1 Data field descriptions for the Container tag

Entry	Bits Required	Tag Data Sequences	Minimum Value	Maximum Value	Unit
Equipment Group Code	**5**	**0–4**	**0**	**31**	**Type Code**
Tag Type	**2**	**5–6**	**1**	**4**	**Type Code**
Owner's Code (Initial)*	**19**	**7–25**	**A**	**ZZZZ**	**Alpha**
Identification Number	**20**	**26–45**	**0**	**999999**	**Numeric**
Check Digit	**4**	**46–49**	**0**	**9**	**Numeric**
Length	**11**	**50–59,64**	**0**	**2000**	**Centimeters**
			[0	**805**	**Inches]**
First Check Sum	2	60–61			
Reserved Frame Marker	2	62–63			
Height	**9**	**65–73**	**0**	**500**	**Centimeters**
			[0	**392**	**Half Inches]**
Width	**7**	**74–80**	**200**	**300**	**Centimeters**
			[78	**118**	**Inches]**
Container Type Code	**7**	**81–87**	**1**	**128**	**Type Code**
Maximum Gross Weight	**9**	**88–96**	**45**	**455**	**100 kg**
			[99	**1004**	**100 lb]**
Tare Weight	**7**	**97–103**	**0**	**91**	**100 kg**
			[0	**200**	**100 lb]**
Spare	**2**	**104–105**			**Reserved**
Security	12	106–117			Reserved for Security or Limited Owner's Use
Data Format Code	6	118–123			
Second Check Sum	2	124–125			
Frame Marker	2	126–127			

* When the Owner's code is not the same as the Container Initial (Mark), use the Container Initial (Mark) in this field.

The fields are arranged in a hierarchical fashion in order to expedite processing by the data processor. It is intended that the data processor will first look at the Data Format code to determine if the tag should be ignored. For example, in some cases the data processor will wish to ignore all tags except those specified as rail (AAR standard) or marine intermodal (ISO standard) tags.

Once the Data Format code has been processed, then the data processor will look to the Tag Type to determine the configuration, capabilities, and memory capacity of the tag. Next, the data processor will examine the Equipment Group code to determine if the tagged equipment is relevant.

Siemens EX1030
Page 51 of 177

The order in which the remaining fields are processed will be dictated by the particular application.

1.1 Equipment Group Code

This is a numeric field having a value from 0 to 31 that indicates the general type of equipment. Only major categories of equipment types are indicated in this field and other fields are allotted to indicate further details. The Equipment Group code for a container is decimal 10 (binary 01010).

1.2 Tag Type

The Tag Type indicates the configuration, capability, and memory size of the tag. Tag Type = 2 describes this tag specified by this AAR standard.

To code the Tag Type value into the tag, the decimal value is reduced by 1 and converted to its base 2 equivalent.

1.3 Owner's Code/Container Mark (Reference UMLER Section III, Columns 3–6)

The Owner's Code/Container Mark is composed of four letters and can be represented as C1, C2, C3, C4. To code this information in the tag, the possible letters represented by C1 will be assigned to the following decimal values: A = 0, B = 1, C = 2, ...Z = 25. The letters C2, C3, and C4 will be assigned the following values: Blank = 0, A = 1, B = 2, ...Z = 26. This code assignment allows for an Owner's Code of less than four characters, with the actual characters left justified, and the remainder of the field padded with blanks.

Conversion from alpha to numeric would involve the following:

1.3.1 Determine the numeric equivalent of characters C1 through C4. This will result in four numeric values, N1 through N4.

1.3.2 Convert N1 through N4 into one numeric value by using the following formula:

$$\text{Value} = (N1 \times 27^3) + (N2 \times 27^2) + (N3 \times 27) + N4$$

The base 2 equivalent of the decimal number "Value" is stored in the tag's Owner's Code field.

Conversion from a base 2 tag format back to the four letters would involve the following, where "Value" is the decimal equivalent of the base 2 value in the Owner's Code field.

1. $N1 = \text{Value}/27^3$ (integer—drop fractions)
2. $N2 = (\text{Value} - (N1 \times 27^3))/27^2$ (integer)
3. $N3 = (\text{Value} - ((N1 \times 27^3) + (N2 \times 27^2)))/27$ (integer)
4. $N4 = \text{Value} - ((N1 \times 27^3) + (N2 \times 27^2) + (N3 \times 27))$
5. Use the letter-to-number assignments referred to above to convert N1 through N4 from a numeric value to its letter equivalent.

1.4 Identification Number

The Identification Number is encoded into the tag by converting the decimal value from 0 to 999999 to a binary value (a conversion from base 10 to base 2).

1.5 Check Digit

The Check Digit is used as a means of verifying the accuracy of the Owner's Code and Identification Number. The Check Digit is calculated according to an algorithm specified in the International Standards Organization Document 6346:1984. The Check Digit is encoded into the tag by converting the decimal value from 0 to 9 to its equivalent base 2 value.

1.6 Length (Reference UMLER Section III, Line 2, Columns 20–24)

To encode the Length into the tag, the metric value from 0 cm to 2000 cm must be converted to the equivalent base 2 value. The Length is equal to the overall (outside) length of the container.

Siemens EX1030
Page 52 of 177

1.7 Height (Reference UMLER Section III, Line 2, Columns 33–36, and Exhibit D, Code U, Third Numeric)

This field indicates the container height in centimeters or half inches. To encode the container Height into the tag, the metric value from 0 cm to 500 cm must be converted to its equivalent base 2 value.

1.8 Width (Reference UMLER Section III, Line 2, Columns 25–28)

This field indicates the container width in centimeters. The Width is equivalent to the overall (outside) width of the container. To encode the Width into the tag, the metric value from 200 to 300 cm is reduced by 200 and then converted to its equivalent base 2 value.

1.9 Container Type Code

The Container Type code is represented by the decimal values from 1 to 128 as defined in the International Standards Organization document ISO 6346-1984 (E), Annex G. To encode the value into the tag, the decimal value must be reduced by 1 and then converted to its equivalent base 2 value.

1.10 Maximum Gross Weight

The Maximum Gross Weight is measured in hundreds of kilograms or pounds. To encode the Maximum Gross Weight into the tag, the metric value from 45 to 455 kg must be reduced by 45 and then converted to the equivalent base 2 value.

1.11 Tare Weight (Reference UMLER Section III, Line 3, Columns 27–30)

The Tare Weight field is indicated in hundreds of kilograms or pounds. To encode the tare weight into the tag, the metric value from 0 to 9100 kg is converted to the equivalent base 2 value.

1.12 ANSI MH5.1.9-1990

The American National Standards Institute's American National Standard for Freight Containers—Automatic Identification ANSI MH5.1.9-1990 and International Standards Organization Standard 10374 specify an automatic identification standard for containers. This AAR AEI Standard for containers is compatible with the ANSI standard and the ISO standard, except that this AAR standard requires operability at only one of the frequency ranges that the ISO standard requires.

Siemens EX1030
Page 53 of 177

APPENDIX G
REFRIGERATOR VEHICLE DYNAMIC TAG DATA FORMAT

1.0 SCOPE

1.1 The following binary bit position assignments are for the output of the refrigerator dynamic tag. The use of refrigerator vehicle dynamic tags is not mandatory, but if used, this format must be followed.

1.2 This format applies to container and trailer refrigerators, as well as railcar refrigerator vehicles. For railcars, the dynamic tag may not replace standard tags, (i.e., if a dynamic tag is used on a refrigerator railcar, it must be in addition to the two required standard tags).

2.0 PLACEMENT OF TAGS

For railcars, the dynamic tag should be placed in the BR or AL corners, in a location and with a polarization analogous to that specified for standard railcar tags (see paragraph 9.2). For containers and trailers, the tag should be located on the left side of the vehicle, in a location and with a polarization analogous to that specified for standard tags for that equipment (see paragraph 9.4 and paragraph 9.6).

3.0 CONFIGURATION OF TAGS

The tag should be configured to report two frames of data.

3.1 Frame 1

3.1.1 Bits 0–4: Equipment Group Code

10 = Intermodal container
19 = Railcar
21 = Trailer

3.1.2 Bits 5–6: Tag Type

3 = Dynamic tag

3.1.3 Bits 7–25: Vehicle Initial (or Owner's Code, if no initial) (A_-ZZZZ)

3.1.4 Bits 26–59, 64–71: Vehicle Number

(Bits 60–63 are check sums and frame markers)

3.1.5 Bit 72: Alarm Flag

Unit is equipped to report information in bits 73–81
0 = No [False] 1 = Yes [True]

Bit 73

0 = No major alarms present; informational data to be deflned
1 = Major alarm(s) present

3.1.6 Bits 74–81

Bit 74: Microprocessor fault
0 = No [False] 1 = Yes [True]

Bit 75: Sensor fault
0 = No [False] 1 = Yes [True]

Bit 76: High discharge pressure
0 = No [False] 1 = Yes [True]

Bit 77: Electrical control system (DC–microprocessor) shutdown
0 = No [False] 1 = Yes [True]

Bit 78: Low capacity shutdown (refrigerant)
0 = No [False] 1 = Yes [True]

Bit 79: Low engine oil pressure
0 = No [False] 1 = Yes [True]

Bit 80: High engine water temperature
0 = No [False] 1 = Yes [True]

Bit 81: Out of range product temperature
0 = No [False] 1 = Yes [True]

3.1.7 Bits 82–84: Refrigeration unit operating mode

0 = Unit is not equipped to report this information
1 = Low capacity cool
2 = High capacity cool
3 = Heat
4 = Null (satisfied)
5 = Defrost
6 = Power off
7 = Alarm shutdown

3.1.8 Bit 85: Unit has undergone a recent defrost (defined as in the latest 45 minutes or during the last data logging interval, whichever is longer)

0 = No [False] 1 = Yes [True]

Bit 86: Unit is equipped to report this information

0 = No [False] 1 = Yes [True]

3.1.9 Bits 87–89: Volume of fuel in tank (including carbon dioxide for cryogenic equipment) (in 1/8s of capacity; software to convert to liters, gallons, pounds, etc.)

0 = Less than 1/8 full
1 = 1/8 full
2 = 1/4 full
3 = *3/8* full
4 = l/2 full
5 = 5/8 full
6 = 3/4 full
7 = 7/8 full or more

Bit 90: Unit is equipped to report this information

0 = No [False] 1 = Yes [True]

3.1.10 Bits 91–98: Return air temperature for mechanical unit vehicles; product temperature for cryogenic vehicles. [–30 to +33.25, in 1/4 °C]

0 = Not equipped to report this information.
1 = Sensor fault
2 = –30 or less
3 = –29.75
. . .
255 = +*33.25* or more

3.1.11 Bit 99: All monitored doors are closed and all electronic seals are intact (vehicle doors, vent doors, and refrigeration unit compartment doors)

0 = No [False] 1 = Yes [True]

Bit 100: Unit is equipped to report this information

0 = No [False] 1 = Yes [True]

3.1.12 Bits 101–103: Available for Owner's Use

3.1.13 Bit 104: Frame Number of the Dynamic Tag

0 = Frame 1 1 = Frame 2

3.1.14 Bit 105: Communication Status Indicator

0 = Communications fault 1 = Regular communication from a sensor to the tag is occurring/communication status is OK

3.1.15 Bits 106–116: Reserved for security

3.1.16 Bit 117: Low Battery Indicator

0 = Battery is Low 1 = Battery is OK

3.1.17 Bits 118–123: Data Format Code

36 (binary 100100) = Refrigerator or locomotive dynamic tag that *is not* used for identification purposes (i.e., it is a third tag on a rail vehicle or a second tag on other equipment)
37 (binary 100101) = Refrigerator or locomotive dynamic tag that *is* used for identification purposes (i.e., it substitutes for a standard tag)

(Bits 124–127 are check sums and frame markers)

3.2 Frame 2

3.2.1 Bits 128–132: Equipment Group Code (same as bits 0–4)

3.2.2 Bits 133–134: Tag Type (same as bits 5–6)

3.2.3 Bits 135–153: Vehicle Initial (or Owner's Code, if no initial) (same as bits 7–25)

3.2.4 Bits 154–187, 192–199: Vehicle Number (same as bits 26–59, 64–71)

(Bits 188–191 are check sums and frame markers)

3.2.5 Bits 200–207: Evaporator discharge air temperature [–30 to +33.25, in 1/4 °C]

0 = Not equipped to report this information
1 = Sensor fault
2 = –30 or less
3 = –29.75
. . .
255 = +*33.25* or more

3.2.6 Bits 208–215: Set Temperature [–30 to +33.25, in 1/4 °C]

0 = Not equipped to report this information
1 = Sensor fault
2 = –30 or less
3 = –29.75
. . .
255 = +*33.25* or more

3.2.7 Bit 216: Primary electrical power is available to the unit

0 = No [False] 1 = Yes [True]

Bit 217: Unit is equipped to report this information

0 = No [False] 1 = Yes [True]

3.2.8 Bits 218–219: Supplemental alarms (for use in case Frame 1 is not read)

0 = No alarm
1 = Warning, but load not in danger
2 = Unit operating, but load in danger
3 = Unit not operating

3.2.9 Bits 220–221: Suction pressure

0 = Not equipped to report this information
1 = Sensor fault
2 = Negative suction pressure (vacuum)
3 = Positive suction pressure

Bits 222–226

Values for Bits 220–221 = 2: (Negative Suction Pressure)			Values for Bits 220–221 = 3: (Positive Suction Pressure)		
	in. Hg	mm Hg		psig	Bar
0 =	0.00	0.00	0 =	0.00	0.00
1 =	–0.65	–16.39	1 =	3.87	0.27
. . .			. . .		
30 =	–19.35	–491.61	30 =	116.13	8.01
31 =	–20.00	–508.00	31 =	120.00	8.27

3.2.10 Bits 227–231: Available for owner's use

3.2.11 Bit 232: Frame Number of the Dynamic Tag

0 = Frame 1 1 = Frame 2

3.2.12 Bit 233: Communication Status Indicator

0 = Communications fault 1 = Regular communication from a sensor to the tag is occurring/communication status is OK

3.2.13 Bits 234–245: Reserved for Security

3.2.14 Bit 245: Low Battery Indicator

0 = Battery is low 1 = Battery is OK

3.2.15 Bits 246–251: Data Format Code

36 (binary 100100) = Refrigerator or locomotive dynamic tag that *is not* used for identification purposes (i.e., it is a third tag on a rail vehicle or a second tag on other equipment)
37 (binary 100101) = Refrigerator or locomotive dynamic tag that *is* used for identification purposes (i.e., it substitutes for a standard tag)

(Bits 252–255 are check sums and frame markers)

APPENDIX H
LOCOMOTIVE DYNAMIC TAG DATA FORMAT

1.0 SCOPE

1.1 The following binary bit position assignments are for the output of the locomotive dynamic tag. Use of locomotive dynamic tags is voluntary. If dynamic tags are used on locomotives, this format is mandatory.

1.2 When a dynamic tag is used on a locomotive, it should substitute for one standard tag, so that all locomotives have two tags.

2.0 FRAME CONFIGURATION VS. SPEED

2.1 The tag should be configured to report two frames of data when the locomotive is operating below 40 mph and to report only the first frame of data when the locomotive is operating above 40 mph.

2.2 Data that could optionally be included in the second frame or alarm fields include train handling impacts, oil level and pressure, sand level, wheel slips, flange lubricator status, alerter cut out, and engine emissions or smoke opacity.

3.0 FIELD CONFIGURATION OF TAGS

3.1 Frame 1

Bits 0–67 are for the same fields as on standard locomotive tags (refer to Appendix B). This arrangement enables users to substitute a dynamic tag for one standard tag (i.e., use two tags total per locomotive versus three).

3.1.1 Bits 0–4: Equipment Group Code

3.1.2 Bits 5–6: Tag Type

3 = Dynamic Tag

3.1.3 Bits 7–25: Locomotive Initial (A_–ZZZZ)

3.1.4 Bits 26–45: Locomotive Number (0–999999)

3.1.5 Bit 46: Side Indicator Code

3.1.6 Bits 47–55: Length

3.1.7 Bits 56–59, 64: Number of Axles

(Bits 60–63 are check sums and frame markers)

3.1.8 Bits 65–67: Bearing Type Code

3.1.9 Bits 68–71: Alarm Codes

0 = No alarms
1 = Traction motor overspeed
2 = Brake pressure at last car less than 45 psi
3 = Brake pressure in main reservoir less than brake pipe pressure or (emergency reservoir pressure + 15 psi)
4 = PCS open
5 = Wheel slip
6 = Dynamic brake warning
7 = Penalty brake
8 = Ground relay
9 = High horsepower setting
10–14 = Reserved
15 = Multiple alarms

3.1.10 Bits 72–77: Volume of fuel in tank

0–25,200 liters, in 400-liter increments (software to convert to gallons)

3.1.11 Bits 78–91: Cumulative kilowatt hours

0–1,638,300 kw-hrs, in 100 kw-hr units

3.1.12 Bit 92: The locomotive is capable of producing rated horsepower (definition as determined by owner)

0 = No 1 = Yes

Bit 93: Locomotive is equipped to report this information

0 = No 1 = Yes

3.1.13 Bit 94: A traction motor is cut out

0 = No 1 = Yes

Bit 95: Locomotive is equipped to report this information

0 = No 1 = Yes

3.1.14 Bit 96: Dynamic brake is cut out due to operating restriction

0 = No 1 = Yes

Bit 97: Locomotive is equipped to report this information

0 = No 1 = Yes

3.1.15 Bit 98: Dynamic brake is mechanically operational

0 = No 1 = Yes

Bit 99: Locomotive is equipped to report this information

0 = No 1 = Yes

3.1.16 Bit 100: Locomotive engine is running

0 = No 1 = Yes

Bit 101: Locomotive is equipped to report this information

0 = No 1 = Yes

3.1.17 Bit 102: Locomotive is isolated

0 = No 1 = Yes

Bit 103: Locomotive is equipped to report this information

0 = No 1 = Yes

3.1.18 Bit 104: Frame Number of the Dynamic Tag

0 = Frame 1 1 = Frame 2

3.1.19 Bit 105: Communication Status Indicator

0 = Communications fault 1 = Regular communication from a sensor to the tag is occurring/communication status is OK

3.1.20 Bits 108–111: Cumulative count of how many times engine temperature switch (ETS switch) has tripped (cooling water temperature has been above 102 °C; rolls back to zero after maximum count is reached)

0	= Not equipped	8	= 7 times
1	= 0 times	9	= 8 times
2	= 1 time	10	= 9 times
3	= 2 times	11	= 10 times
4	= 3 times	12	= 11 times
5	= 4 times	13	= 12 times
6	= 5 times	14	= 13 times
7	= 6 times	15	= 14 times or more

(Bits 106, 107, 112, 113 are reserved for security)

3.1.21 Bit 114: Cooling water level is low

0 = No 1 = Yes

Bit 115: Locomotive is equipped to report this information

0 = No 1 = Yes

3.1.22 Bit 116: Reserved for future definition by the AAR

3.1.23 Bit 117: Low Battery Indicator

0 = Battery is low 1 = Battery is OK

3.1.24 Bits 118–123: Data Format Code

36 (binary 100100) = Refrigerator or locomotive dynamic tag that *is not* used for identification purposes (i.e., it is a third tag on a rail vehicle or a second tag on other equipment)
37 (binary 100101) = Refrigerator or locomotive dynamic tag that *is* used for identification purposes (i.e., it substitutes for a standard tag)

(Bits 124–127 are check sums and frame markers)

3.2 Frame 2

The second frame is available for owner's optional use, except for several fields that must be uniformly defined to maintain system integrity. These are as follows:

3.2.1 Bits 128–132: Equipment Group Code (same as bits 0–4)

3.2.2 Bits 133–134: Tag Type (Dynamic Tag = 3) (same as bits 5–6)

3.2.3 Bits 135–153: Locomotive Initial (same as bits 7–25)

3.2.4 Bits 154–173: Locomotive Number (same as bits 26–45)

3.2.5 Bit 174: Side Indicator (same as bit 46)

(Bits 188–191 are check sums and frame markers)

3.2.6 Bit 232: Frame Number of the Dynamic Tag

0 = Frame 1 1 = Frame 2

3.2.7 Bit 233: Communication Status Indicator

0 = Communications fault 1 = Regular communication from a sensor to the tag is occurring/communication status is OK

3.2.8 Bits 234–245: Reserved for Security

3.2.9 Bit 245: Low Battery Indicator

0 = Battery is low 1 = Battery is OK

3.2.10 Bits 246–251: Data Format Code

36 (binary 100100) = Refrigerator or locomotive dynamic tag that *is not* used for identification purposes (i.e., it is a third tag on a rail vehicle or a second tag on other equipment)
37 (binary 100101) = Refrigerator or locomotive dynamic tag that *is* used for identification purposes (i.e., it substitutes for a standard tag)

(Bits 252–255 are check sums and frame markers.)

APPENDIX I
RAILCAR COVER TAG DATA FORMAT

1.0 SCOPE

1.1 The following binary bit position assignments are for tags for railcar covers, roofs, and hoods. The use of the tags on this equipment is not mandatory, but if used, this format must be followed.

1.2 Bits 0–45 are the same fields as on ordinary railcar tags (refer to Appendix A):

2.0 FIELD CONFIGURATION OF TAGS

2.1 Bits 0–4: Equipment Group Code

1 = Railcar cover

2.2 Bits 5–6: Tag Type

2 = Standard Tags

2.3 Bits 7–25: Equipment Initial (A_–ZZZZ)

2.4 Bits 26–45: Equipment Number (0–999999)

2.5 Bit 46: Side Indicator Code

0 = Tag 0 1 = Tag 1

2.6 Bits 47–53: Length

(30–157 dm {10–52 ft})

To encode the length into the tag, the metric value from 30 to 157 dm must be reduced by decimal 30, then converted to the equivalent base 2 value. 30 dm also shall apply to all lengths less than 30 dm, and 157 dm also shall apply to all lengths more than 157 dm.

2.7 Bits 54–57: Cover Type

0 =	1 piece fiberglass	7 =	First on–fiberglass–high profile
1 =	1 piece steel	8 =	First off–fiberglass–high profile
2 =	High-profile steel	9 =	First on–steel
3 =	First on–fiberglass–internal rib	10 =	First off–steel
4 =	First off–fiberglass–internal rib	11–13 =	Reserved for future definition by AAR
5 =	First on–fiberglass–external rib	14 =	Horizontally tagged cover
6 =	First off–fiberglass–external rib	15 =	Other

2.8 Bits 58–59, 64–67: Date built or rebuilt (optional)

0 =	Not used	9 =	1979	18 =	1988
1 =	1971 or earlier	10 =	1980	19 =	1989
2 =	1972	11 =	1981	20 =	1990
3 =	1973	12 =	1982	21 =	1991
4 =	1974	13 =	1983	22 =	1992
5 =	1975	14 =	1984	23 =	1993
6 =	1976	15 =	1985	24 =	1994
7 =	1977	16 =	1986	63 =	etc. to 2033
8 =	1978	17 =	1987		

(Bits 60–63 are check sums and frame markers)

2.9 Bit 68: Insulation

0 = Not insulated 1 = Insulated

2.10 Bits 69–71: Fitting Code/Lifting Bracket

0 = C hooks
1 = Clamp device
2 = Electric coil grab
3 = Mechanical coil grab
4 = Multiple capability–electric, mechanical, and C hooks
5–6 = Reserved for future definition by AAR
7 = Other

2.11 Bits 72–90: Initial of associated railcar (optional) (A –ZZZZ).

2.12 Bits 91–105, 108–111, 114: Number of associated railcar (0–999999), or security (optional)

2.13 Bits 106–107, 112–113, 115–117: Security (optional)

If bits 108–111 are used as part of the railcar number, the following restriction applies:

If...	Then...
...bits 108–111 equal binary 0000,	...bits 106–l07 must be binary 00.
...bits 108–111 do not equal binary 0000,	...bits 106–107 must be binary 10.

If bit 114 is used as part of the railcar number, the following restriction applies:

If...	Then...
...bit 114 equals binary 0,	...bits 112–113 must be binary 00.
...bits 114 does not equal binary 0,	...bits 112–113 must be binary 10.

2.14 Bits 118–123: Data Format Code

51 (binary 110011) = standard tags, including railcar cover tags

(Bits 124–127 are check sums and frame markers)

APPENDIX J
PASSIVE ALARM TAG DATA FORMAT (TYPE I)

1.0 GENERAL

1.1 The following binary bit position assignments are for the output of the passive alarm tag. The use of this tag is not mandatory, but if used, this format must be followed.

1.2 This format applies to container and trailers, as well as railcars. For railcars, this tag may not replace standard tags, i.e., if a passive alarm tag is used on a railcar, it must be in addition to the two required standard tags.

1.3 For railcars, the passive alarm tag should be placed in the BR or AL corners, in a location and with a polarization analogous to that specified for standard railcar tags (see paragraph 9.2). For containers and trailers, the tag should be located on the left side of the vehicle, in a location and with a polarization analogous to that specified for standard tags for that equipment (see paragraph 9.4 and paragraph 9.6). However, these locations cannot be utilized if they are already being utilized for other tags, such as dynamic tags. For guidance in locating tags in this situation, contact the Director—Freight Car Construction.

1.4 Tags used in this application are not required to meet the approval requirements of paragraph 10.0 or S-060, Application for Component Approval Procedures. They also are not required to meet the tag requirements specified in the Recommended Test Protocol referenced in paragraph 2.2.1.

2.0 BITS AVAILABLE FOR GENERAL USE

Fields specified by the standard are listed in Table J.1. General Use fields are indicated in **bold** type. A description of each General Use field is presented in the paragraphs following Table J.1.

The Type I Passive Alarm is a read-only tag that features an interface to on-board equipment. This interface will disable the tag (prevent it from being read by a reader) if there is no alarm and activate the tag (allow it to be read by a reader) if there is an alarm condition. Data encoded into the tag cannot be modified by external on-board equipment. The tag may, however, be modified by a tag programmer during normal programming operations.

Table J.1 Data field descriptions for the Type I Passive Alarm tag

Entry	Bits Required	Tag Data Sequences	Minimum Value	Maximum Value	Unit
Equipment Group Code	**5**	**0–4**	**0**	**31**	**Type Code**
Tag Type	**2**	**5–6**	**1**	**4**	**Type Code**
Equipment Initial (Mark)	**19**	**7–25**	**A**	**ZZZZ**	**Alpha**
Equiment Number	**20**	**26–45**	**0**	**999999**	**Numeric**
Side Indicator Code	**1**	**46**	**0**	**1**	**Side Code**
Length	**12**	**94–96,**	**0**	**4095**	**Decimeters**
		47–55*	**[0**	**1331**	**Feet]**
Number of Axles	**5**	**56–59, 64**	**1**	**32**	**Axles**
First Check Sum	2	60–61			
Reserved Frame Marker	2	62–63			
Bearing Type Code	**3**	**65–67**	**0**	**7**	**Type Code**
Platform Identifier Code	**4**	**68–71**	**0**	**15**	**Platform Code**

Table J.1 Data field descriptions for the Type I Passive Alarm tag (continued)

Entry	Bits Required	Tag Data Sequences	Minimum Value	Maximum Value	Unit
Alarm Codes	**12**	**72–83**	**0**	**4095**	**Alarm Code**
Spare	**19**	**84–93, 97–105**			**Available for Owner's Use**
Security	12	106–117			Reserved for Security or Limited Owner's Use
Data Format Code	**6**	**118–123**	**0**	**63**	**Format Code**
Second Check Sum	2	124–125			
Frame Marker	2	126–127			

* Bit order shall be 94, 95, 96, 47, 48...55.

The fields are arranged in a hierarchical fashion in order to expedite processing by the data processor. It is intended that the data processor will first look at the Data Format code to determine if the tag should be ignored. For example, in some cases the data processor will wish to ignore all tags except those specified as rail (AAR standard) or marine intermodal (ISO standard) tags.

Once the Data Format code has been processed, then the data processor will look to the Tag Type to determine the configuration, capabilities, and memory capacity of the tag. The Passive Alarm Tag uses Tag Type code 2. Next, the data processor will examine the Equipment Group code to determine if the tagged equipment is relevant.

The order in which the remaining fields are processed will be dictated by the particular application.

2.1 Equipment Group Code

This is a numeric field having a value from 0 to 31 that indicates the general type of equipment. This format uses decimal 28 (Passive Alarm Tag) in its Equipment Group code.

2.2 Tag Type

The Tag Type indicates the configuration, capability, and memory size of the tag. Tag Type = 2 describes this tag.

To code the Tag Type value into the tag, the decimal value is reduced by 1 and converted to its base 2 equivalent.

2.3 Equipment Initial

The Equipment Initial is composed of four letters and can be represented as C1, C2, C3, C4. To code this information in the tag, the possible letters represented by C1 will be assigned to the following decimal values: A = 0, B = 1, C = 2, ...Z = 25. The letters C2, C3, and C4 will be assigned the following values: Blank = 0, A = 1, B = 2, ...Z = 26. This code assignment allows for an Initial of less than four characters, with the actual characters left justified, and the remainder of the field padded with blanks.

Conversion from alpha to numeric would involve the following:

2.3.1 Determine the numeric equivalent of characters C1 through C4. This will result in four numeric values, N1 through N4.

2.3.2 Convert N1 through N4 into one numeric value by using the following formula:

$$\text{Value} = (N1 \times 27^3) + (N2 \times 27^2) + (N3 \times 27) + N4$$

The base 2 equivalent of the decimal number “Value” is stored in the tag's Equipment Initial field.

Siemens EX1030
Page 65 of 177

Conversion from a base 2 tag format back to the four letters would involve the following, where "Value" is the decimal equivalent of the base 2 value in the Equipment Initial field.

1. $N1 = Value/27^3$ (integer—drop fractions)
2. $N2 = (Value - (N1 \times 27^3))/27^2$ (integer)
3. $N3 = (Value - ((N1 \times 27^3) + (N2 \times 27^2)))/27$ (integer)
4. $N4 = Value - ((N1 \times 27^3) + (N2 \times 27^2) + (N3 \times 27))$
5. Use the letter-to-number assignments referred to above to convert N1 through N4 from a numeric value to its letter equivalent.

2.4 Equipment Number

The Equipment Number is encoded into the tag by converting the decimal value from 0 to 999999 to a binary value (a conversion from base 10 to base 2).

2.5 Side Indicator Code

The Side Indicator code indicates whether the tag is installed on the left or right side of the equipment. For railcars, the right or left side is in reference to a person facing the car from the handbrake end (B end) of the car (see diagram, Exhibit A). The right side of the equipment is assigned a binary value 1 and the left side is assigned a binary value 0.

2.6 Length

The exterior length is measured as specified by the *UMLER Data Specification Manual*. To encode the data into the tag, the metric value from 0 dm to 4095 dm is converted to a base 2 equivalent value.

2.7 Number of Axles

This field indicates the number of rail axles on the equipment. To encode the Number of Axles into the tag, the decimal value from 1 to 32 is reduced by 1 and converted to base 2.

2.8 Bearing Type Code

To encode the Bearing Type code into the tag, the decimal value of 0 through 7 must be converted to the equivalent base 2 value. Table J.2 presents a description of each Bearing Type code value.

Table J.2 Data values for the Bearing Type code

Value	Description
0	Plain bearings
1	Roller bearings, not otherwise classified
2	Roller bearings, inboard
3	Roller bearings, 3-axle truck, 1 axle obstructed ("buckeye design")
4	Roller bearings, plain bearing housing
5	Roller bearings, cylindrical oil filled
6–7	Reserved

2.9 Platform Identifier Code

Table J.3 presents the values assigned to each Platform Identifier code. Nonarticulated or single unit cars shall be assigned the value 0. *All equipment except articulated railcars shall be assigned the value 0.* For multi-unit cars, "B" is assigned to the platform stenciled "B" and "A" is assigned to the extreme opposite platform. Platforms adjacent to the "B" platform are assigned "C," "D," "E," etc., in a sequential manner for consecutive platforms moving away from the "B" platform. To encode the Platform Identifier code into the tag, the decimal value from 0 to 15 must be converted to its equivalent base 2 value.

Siemens EX1030
Page 66 of 177

Table J.3 Data values for the Platform Identifier code

Value	Description
0	All equipment except articulated railcars (includes single platform and nonarticulated cars)
1	“A” platform
2	“B” platform
3	“C” platform
4	“D” platform
5	“E” platform
6	“F” platform
7	“G” platform
8	“H” platform
9	“I” platform
10	“J” platform
11	“K” platform
12	“L” platform
13	“M” platform
14	“N” platform
15	“O” platform—also applies for platforms beyond the 15th

2.10 Alarm Code

To encode the Alarm code into the tag, the decimal value 0 through 4095 must be converted to the equivalent base 2 value. Table J.4 presents a description of each assigned Alarm code value.

Table J.4 Data values for the Alarm code

Value	Description
0	No alarm
1	Draft gear cushioning unit low pressure—A end
2	Draft gear cushioning unit low pressure—B end
3	Door open
4	Draft gear cushioning unit defective—A end
5	Draft gear cushioning unit defective—B end
6	Temperature out of range
7	Loss of power to any feeder
8–4095	Reserved

2.11 Spare

This field can optionally be used for any purpose by the owner.

2.12 Data Format Code

101001 Passive alarm tag that *is not* used for identification purposes (i.e., it is a third tag on a rail vehicle or a second tag on other equipment).

101011 Passive alarm tag that *is* used for identification purposes (i.e., it sustitutes for a standard tag) on a trailer, container, generator set, nitrogen clip, or separable refrigeration unit.

APPENDIX K
IMPACT RECORDER DYNAMIC TAG DATA FORMAT (TYPE I)

1.0 GENERAL

1.1 The following binary bit position assignments are for the output of the Type I impact recorder dynamic tag. The use of impact recorder dynamic tags is not mandatory, but if Type I impact recorder dynamic tags are used, this format must be followed.

1.2 This format applies to container and trailers, as well as railcars. For railcars, the dynamic tag may not replace standard tags, i.e., if a dynamic tag is used on a railcar, it must be in addition to the two required standard tags.

1.3 For railcars, the dynamic tag should be placed in the BR or AL corners, in a location and with a polarization analogous to that specified for standard railcar tags (see paragraph 9.2). For containers and trailers, the tag should be located on the left side of the vehicle, in a location and with a polarization analogous to that specified for standard tags for that equipment (see paragraph 9.4 and paragraph 9.6). However, these locations cannot be utilized if they are already being utilized for other tags, such as passive alarm tags. For guidance in locating tags in this situation, contact the Director—Freight Car Construction.

2.0 BITS AVAILABLE FOR GENERAL USE

Fields specified by the standard are listed in Table K.1. General Use fields are indicated in **bold** type. A description of each General Use field is presented in the paragraphs following Table K.1.

The Type I Dynamic Tag for Impact Recorders is a read-only tag that features an interface to on-board equipment. Data can be sent from the on-board equipment to the tag, and the tag will retain this information until the on-board equipment replaces the data with new information. The retained data can be communicated to readers when the tag is properly presented.

2.1 Frame 1

Table K.1 Data field descriptions for the type I dynamic tag for impact recorders

Entry	Bits Required	Tag Data Sequences	Minimum Value	Maximum Value	Unit
Equipment Group Code	**5**	**0–4**	**0**	**31**	**Type Code**
Tag Type	**2**	**5–6**	**1**	**4**	**Type Code**
Equipment Initial (Mark)	**19**	**7–25**	**A**	**ZZZZ**	**Alpha**
Equiment Number	**20**	**26–45**	**0**	**999999**	**Numeric**
Side Indicator Code	**1**	**46**	**0**	**1**	**Side Code**
Analog Measurement	**8**	**47–54**	**0**	**255**	**Code**
Longitudinal Impact *g* Force Measurement	**7**	**55–59, 64–65**	**0**	**127**	**.1G**
First Check Sum	2	60–61			
Reserved Frame Marker	2	62–63			
Vertical Impact Alarm	**2**	**66–67**	**0**	**3**	**Alarm Code**
Platform Identifier Code	**4**	**68–71**	**0**	**15**	**Platform Code**
Digital Alarm Codes	**4**	**72–75**	**0**	**15**	**Alarm Code**
Analog Port	**3**	**76–78**	**0**	**7**	**Port Code**
Temperature Alarm	**1**	**79**	**0**	**1**	**Alarm Code**

Table K.1 Data field descriptions for the type I dynamic tag for impact recorders (continued)

Entry	Bits Required	Tag Data Sequences	Minimum Value	Maximum Value	Unit
Longitudinal Impact Delta V Measurement	**7**	**80–86**	**0**	**127**	**.1 mph**
Time and Date of Longitudinal Impact	**17**	**87–93 97–103, 114–116**	**0**	**131072**	**5 minutes**
Lateral Impact Alarm	**2**	**94–95**	**0**	**3**	**Alarm Code**
Recorder Low Battery Indicator	**1**	**96**	**0**	**1**	**Indicator Code**
Frame Number	**1**	**104**	**0**	**1**	**Number Code**
Communication Status	**1**	**105**	**0**	**1**	**Status Code**
Tag Security	4	106–107 112–113			Security
Longitudinal Impact Counter	**4**	**108–111**	**0**	**15**	**Numeric**
Tag Low Battery Indicator	**1**	**117**	**0**	**1**	**Indicator Code**
Data Format Code	**6**	**118–123**	**0**	**63**	**Format Code**
Second Check Sum	2	124–125			
Frame Marker	2	126–127			

2.2 Frame 2

The second frame is available for optional owner's use, except for several fields that must be uniformly defined to maintain system integrity. These are listed below.

Table K.2 Data field descriptions for optional second frame

Entry	Bits Required	Tag Data Sequences	Minimum Value	Maximum Value	Unit
Equipment Group Code	**5**	**128–132**	**0**	**31**	**Type Code**
Tag Type	**2**	**133–134**	**1**	**4**	**Type Code**
Equipment Initial (Mark)	**19**	**135–153**	**A**	**ZZZZ**	**Alpha**
Equiment Number	**20**	**154–173**	**0**	**999999**	**Numeric**
Spare	**54**	**174–187, 192–231**			**Available for Owner's Use**
First Check Sum	2	188–189			
Reserved Frame Marker	2	190–191			
Frame Number	**1**	**232**	**0**	**1**	**Number Code**
Communication Status	**1**	**233**	**0**	**1**	**Status Code**

Siemens EX1030
Page 69 of 177

Table K.2 Data field descriptions for optional second frame (continued)

Entry	Bits Required	Tag Data Sequences	Minimum Value	Maximum Value	Unit
Security or	12	234–244			Security or **Battery Indicator**
Tag Low Battery Indicator	**1**	**245**	**0**	**1**	**Indicator Code**
Data Format Code	**6**	**246–251**	**0**	**63**	**Format Code**
Second Check Sum	2	252–253			
Frame Marker	2	254–255			

The fields are arranged in a hierarchical fashion in order to expedite processing by the data processor. It is intended that the data processor will first look at the Data Format code to determine if the tag should be ignored. For example, in some cases the data processor will wish to ignore all tags except those specified as rail (AAR standard) or intermodal tags.

Once the Data Format code has been processed, then the data processor will look to the Tag Type to determine the configuration, capabilities, and memory capacity of the tag. Next, the data processor will examine the Equipment Group code to determine if the tagged equipment is relevant.

The order in which the remaining fields are processed will be dictated by the particular application.

2.2.1 Equipment Group Code

This is a numeric field having a value from 0 to 31 that indicates the general type of equipment. Refer to paragraph 7.3.3 for the table of these codes.

2.2.2 Tag Type

2.2.2.1 The Tag Type indicates the configuration, capability, and memory size of the tag. Tag Type = 3 indicates a dynamic tag.

2.2.2.2 To code the Tag Type value into the tag, the decimal value is reduced by 1 and converted to its base 2 equivalent.

2.2.3 Equipment Initial

The Equipment Initial is composed of four letters and can be represented as C1, C2, C3, C4. To code this information in the tag, the possible letters represented by C1 will be assigned to the following decimal values: A = 0, B = 1, C = 2, ...Z = 25. The letters C2, C3, and C4 will be assigned the following values: Blank = 0, A = 1, B = 2, ...Z = 26. This code assignment allows for an Initial of less than four characters, with the actual characters left justified, and the remainder of the field padded with blanks.

Conversion from alpha to numeric would involve the following:

2.2.3.1 Determine the numeric equivalent of characters C1 through C4. This will result in four numeric values, N1 through N4.

2.2.3.2 Convert N1 through N4 into one numeric value by using the following formula:

$$\text{Value} = (N1 \times 27^3) + (N2 \times 27^2) + (N3 \times 27) + N4$$

The base 2 equivalent of the decimal number “Value” is stored in the tag's Equipment Initial field.

Conversion from a base 2 tag format back to the four letters would involve the following, where “Value” is the decimal equivalent of the base 2 value in the Equipment Initial field.

1. $N1 = \text{Value}/27^3$ (integer—drop fractions)
2. $N2 = (\text{Value} - (N1 \times 27^3))/27^2$ (integer)

3. $N3 = (Value - ((N1 \times 27^3) + (N2 \times 27^2)))/27$ (integer)
4. $N4 = Value - ((N1 \times 27^3) + (N2 \times 27^2) + (N3 \times 27))$
5. Use the letter-to-number assignments referred to above to convert N1 through N4 from a numeric value to its letter equivalent.

2.2.4 Equipment Number

The Equipment Number is encoded into the tag by converting the decimal value from 0 to 999999 to a binary value (a conversion from base 10 to base 2).

2.2.5 Side Indicator Code

The Side Indicator code indicates whether the tag is installed on the left or right side of the equipment. For railcars, the right or left side is in reference to a person facing the car from the handbrake end (B end) of the car (see diagram, Exhibit A). The right side of the equipment is assigned a binary value 1 and the left side is assigned a binary value 0.

2.2.6 Analog Measurement

This field (Bits 47–54) reflects the reading of the analog port being related in the Analog Port field, Bits 76–78. The encoding of the analog value is determined by the sensor that is connected to the analog port.

2.2.7 Longitudinal Impact *g* Force Measurement

The Longitudinal Impact *g* Force Measurement field reports the acceleration experienced by the longitudinal axis for a particular impact. It is expressed in 0.1-*g* increments with a maximum of 12.7 Gs. To encode this field, the decimal value from 0 to 12.7 Gs must be multiplied by 10.

2.2.8 Vertical Impact Alarms

2.2.8.1 The vertical axis has two bits (Bits 66–67) for impact alarm information. The definition of these bits is as follows:

Table K.3 Data values for the Vertical Impact Alarm code

Bits		
66	67	Definition
0	0	No alarm condition
0	1	Vertical/lateral impact exceeded threshold 1
1	0	Vertical/lateral impact exceeded threshold 2
1	1	Vertical/lateral impact exceeded threshold 3

2.2.8.2 The thresholds for vertical impacts listed above can be set in the configuration of the impact recorder. Threshold 1 shall correspond to the threshold that can be set in the configuration in which impact recording takes place. Threshold 2 shall be greater than or equal to threshold 1; threshold 3 shall be greater than or equal to threshold 2. No impact counters or time and date of measurement shall be associated with the vertical impacts.

2.2.9 Platform Identifier Code

Table K.4 presents the values assigned to each platform identifier code. Nonarticulated or single unit cars shall be assigned the value 0. *All equipment except articulated railcars shall be assigned the value 0.* For multi-unit cars, “B” is assigned to the platform stenciled “B” and “A” is assigned to the extreme opposite platform. Platforms adjacent to the “B” platform are assigned “C,” “D,” “E,” etc., in a sequential manner for consecutive platforms moving away from the “B” platform. To encode the Platform Identifier code into the tag, the decimal value from 0 to 15 must be converted to its equivalent base 2 value.

Table K.4 Data values for the Platform Identifier code

Value	Description
0	All equipment except articulated railcars (includes single platform and nonarticulated cars)
1	“A” platform
2	“B” platform
3	“C” platform
4	“D” platform
5	“E” platform
6	“F” platform
7	“G” platform
8	“H” platform
9	“I” platform
10	“J” platform
11	“K” platform
12	“L” platform
13	“M” platform
14	“N” platform
15	“O” platform—also applies for platforms beyond the 15th

2.2.10 Digital Alarm Codes

Each digital alarm has a bit (bits 72–75) associated with it. If no digital alarm is detected, the bit equals 0, and if a digital alarm has occurred, the bit equals 1. The bits are associated as follows:

Table K.5 Data values for the Digital Alarm code

Bit	Description
72	Digital input alarm 1
73	Digital input alarm 2
74	Digital input alarm 3
75	Digital input alarm 4

2.2.11 Analog Port

2.2.11.1 This field (bits 76–78) indicates the analog port that received a measurement greater or less than the preset threshold that is currently reported in the Analog Measurement field. The meaning of a value stored in this field is as follows:

Table K.6 Data values for the Analog Port

Value	Description
0	No alarm condition present
1	Analog Port 1
2	Analog Port 2
3	Analog Port 3
4	Analog Port 4
5	Analog Port 5 (temperature sensor)
6	Reserved
7	Reserved

2.2.11.2 The priorities of the analog ports shall remain the same in that the highest priority is assigned to the lowest port value. Any analog port may be designated "critical," which will give it the ability to override the priority hierarchy.

2.2.12 Temperature Alarm

This field (bit 79) indicates if the temperature sensor (Analog Port 5) has exceeded a threshold. A value of 1 indicates a threshold has been exceeded.

2.2.13 Longitudinal Impact Delta V Measurement

Upon a longitudinal impact event, the Longitudinal Impact Delta V Measurement field (bits 80–86) expresses the change of velocity experienced by the impact recorder. This value shall be expressed in 0.1-mph increments with a maximum of 12.7 mph. To encode this field, the decimal value from 0 to 12.7 mph must be multiplied by 10.

2.2.14 Time and Date of Longitudinal Impact

This field contains the time and date that the sensor received a measurement that was above the preset threshold value. The time and date is for the current measurement contained in the Longitudinal Impact Delta V or the *g* Force Measurement fields, as determined by the user. The time and date is in increments of 5 minutes from the beginning of the year (Greenwich Mean Time).

2.2.15 Lateral Impact Alarms

2.2.15.1 The lateral axis has two bits (bits 94–95) for impact alarm information. The definition of these bits is as follows:

Table K.7 Data values for the Lateral Impact Alarm code

Bits		
94	95	Definition
0	0	No alarm condition
0	1	Vertical/lateral impact exceeded threshold 1
1	0	Vertical/lateral impact exceeded threshold 2
1	1	Vertical/lateral impact exceeded threshold 3

2.2.15.2 The thresholds for lateral impacts listed above can be set in the configuration of the impact recorder. Threshold 1 shall correspond to the threshold that can be set in the configuration in which impact recording takes place. Threshold 2 shall be greater than or equal to threshold 1; threshold 3 shall be greater than or equal to threshold 2. No impact counters or time and date of measurement shall be associated with the lateral impacts.

2.2.16 Recorder Low Battery Indicator

If this bit (bit 96) equals 1, a low battery condition exists on the impact recorder.

2.2.17 Frame Number of the Dynamic Tag

This field reports the message frame number. Frame 1 has a numeric value of 0, and Frame 2 has a numeric frame number of 1.

2.2.18 Communication Status

This field reports the status of the communications with the sensing device connected to the dynamic tag. If there is a communications fault, this field contains a numeric 0. If the communications are in order, this field contains a numeric 1.

2.2.19 Longitudinal Impact Counter

Upon the occurrence of any impact that exceeds the threshold for the longitudinal axis, this counter field (bits 108–111) is incremented. When the field reaches its maximum at 15, it shall wrap and begin at 0 upon the next impact.

Siemens EX1030
Page 73 of 177

2.2.20 Tag Low Battery Indicator

This field reports the status of the battery in the batter-powered dynamic tag. If the battery is low, this field contains a numeric 0. If the battery is okay, this field contains a numeric 1. This field shall also contain a numeric 1 for tags that do not use batteries.

2.2.21 Data Format Code

101001 Dynamic tag for impact recorders that *is not* used for identification purposes (i.e., it is a third tag on a rail vehicle or a second tag on other equipment).

3.0 SUPPLEMENTARY SPECIFICATIONS

The following specifications pertaining to tag operation are recommended for use as a common standard but are not required at this time. These guidelines for the interface of the tag with the impact recorder are based on the recommendations of the AAR Damage Prevention and Freight Claim Working Committee.

3.1 Tag Update with RF Detected Timer

3.1.1 The Tag Update with RF Detected timer shall pertain to the Longitudinal Impact *g* Force Measurement, Longitudinal Impact Delta V Measurement, Vertical Impact Alarm, Lateral Impact Alarm, and Analog Measurement/Analog Port fields. When one of these fields has been written, the values may be overwritten by either of the following:

3.1.1.1 An event of higher priority occurs:

In the case of a longitudinal impact.	if it has a greater Delta V measurement.
In the case of Lateral and Vertical Impact Alarms.	if it has a higher threshold impact occurrence.
In the case of an Analog Measurement/Analog Port. . . .	if it is a port of a higher priority as listed above in the Analog Port field.

3.1.1.2 Upon the occurrence of a lower priority longitudinal impact or analog event, *and* RF has been detected by the dynamic tag, *and* the Tag Update with RF Detected Timer has expired. (The timer is started when the field is written.) It will be assumed that the dynamic tag was read by a wayside reader if RF was detected by the dynamic tag.

3.1.2 Upon expiration of the Tag Update with RF Detected Timer, the Vertical and Lateral Impact and Temperature Alarm fields are cleared if RF has been detected.

3.2 Tag Update without RF Detected Timer

The Tag Update without RF Detected Timer shall pertain to the Longitudinal Impact and Analog Measurement fields. The operation of this timer shall be the same as the Tag Update with RF Detected Timer, except the fields shall be capable of being updated by a lower priority event *without* RF being detected by the dynamic tag. Upon expiration of the Tag Update without RF Detected Timer, the Vertical and Lateral impact and Temperature Alarm fields are cleared.

3.3 Tag Clear Timer

The Tag Clear Timer shall pertain to all event fields, including Longitudinal, Vertical, and Lateral Impacts, analog events, and digital events. If the dynamic tag has not been written or updated for the amount of time specified by this timer, all fields shall be cleared to the inactive state.

APPENDIX L
GENERATOR SET TAG DATA FORMAT

1.0 DATA FIELD DESCRIPTIONS FOR THE GENERATOR SET TAG

Fields specified by the standard are listed in Table L.1. User fields are indicated in **bold** type. A description of each user field is presented in the paragraphs following Table L.1.

Table L.1 Data field descriptions for the Generator Set tag

Entry	Bits Required	Tag Data Sequences	Minimum Value	Maximum Value	Unit
Equipment Group Code	**5**	**0–4**	**0**	**31**	**Type Code**
Tag Type	**2**	**5–6**	**1**	**4**	**Type Code**
Owner's Code (Initial)*	**19**	**7–25**	**A**	**ZZZZ**	**Alpha**
Genset Number	**32**	**26–57**	**0**	**ZZZZZZ**	**Alpha/Numeric**
Reserved	2	58–59			Reserved for Future Use
First Check Sum	2	60–61			
Framing Bits	2	62–63			
Mounting Code	**3**	**64–66**	**0**	**7**	**Code**
Tare Weight	**6**	**67–72**	**0**	**63**	**100 kg**
Fuel Capacity	**4**	**73–76**	**0**	**15**	**Code**
Voltage	**3**	**77–79**	**0**	**7**	**Code**
Spare	**10**	**80–89**			**Available for Owner's Use**
Reserved	**16**	**90–105**			Reserved for Future Use
Security	12	106–117			See Security Table
Data Format Code	6	118–123			
Second Check Sum	2	124–125			
Frame Marker	2	126–127			

* When the Owner's code is not the same as the Genset Initial (Mark), use the Genset Initial (Mark) in this field.

The fields are arranged in a hierarchical fashion in order to expedite processing by the data processor. It is intended that the data processor will first look at the Data Format code to determine if the tag should be ignored. For example, in some cases the data processor will wish to ignore all tags except those specified as rail (AAR standard) or intermodal tags.

Once the Data Format code has been processed, then the data processor will look to the Tag Type to determine the configuration, capabilities, and memory capacity of the tag. Next, the data processor will examine the Equipment Group code to determine if the tagged equipment is relevant.

The order in which the remaining fields are processed will be dictated by the particular application.

1.1 Equipment Group Code

This is a numeric field having a value from 0 to 31 that indicates the general type of equipment. Only major categories of equipment types are indicated in this field and other fields are allotted to

Siemens EX1030
Page 75 of 177

indicate further details. The Equipment Group code for a generator set is decimal 8 (binary 01000).

1.2 Tag Type

The Tag Type indicates the configuration, capability, and memory size of the tag. Tag Type = 2 describes this tag specified by this AAR standard.

To code the Tag Type value into the tag, the decimal value is reduced by 1 and converted to its base 2 equivalent.

1.3 Owner's Code/Genset Mark

The Owner's Code/Trailer Mark is composed of four letters and can be represented as C1, C2, *C*3, C4. To code this information in the tag, the possible letters represented by C1 will be assigned to the following decimal values: A = 0, B = 1, C = 2, ...Z = 25. The letters C2, C3, and C4 will be assigned the following values: Blank = 0, A = 1, B = 2, ...Z = 26. This code assignment allows for an Owner's code of less than four characters, with the actual characters left justified and the remainder of the field padded with blanks.

Conversion from alpha to numeric would involve the following:

1.3.1 Determine the numeric equivalent of characters C1 through C4. This will result in four numeric values, N1 through N4.

1.3.2 Convert N1 through N4 into one numeric value by using the following formula:

$$\text{Value} = (N1 \times 27^3) + (N2 \times 27^2) + (N3 \times 27) + N4$$

The base 2 equivalent of the decimal number "Value" is stored in the tag's Owner's code field.

Conversion from a base 2 tag format back to the four letters would involve the following, where "Value" is the decimal equivalent of the base 2 value in the Owner's code field.

1. $N1 = \text{Value}/27^3$ (integer—drop fractions)
2. $N2 = (\text{Value} - (N1 \times 27^3))/27^2$ (integer)
3. $N3 = (\text{Value} - ((N1 \times 27^3) + (N2 \times 27^2)))/27$ (integer)
4. $N4 = \text{Value} - ((N1 \times 27^3) + (N2 \times 27^2) + (N3 \times 27))$
5. Use the letter-to-number assignments referred to above to convert N1 through N4 from a numeric value to its letter equivalent.

1.4 Genset Number

Identification Character	Numeric Value	Identification Character	Numeric Value
-(space)	0	H	18
0	1	I	19
1	2	J	20
2	3	K	21
3	4	L	22
4	5	M	23
5	6	N	24
6	7	O	25
7	8	P	26
8	9	Q	27
9	10	R	28
A	11	S	29
B	12	T	30
C	13	U	31
D	14	V	32
E	15	W	33
F	16	X	34
G	17	Y	35
		Z	36

The value associated with each character position will then form a base 37 number which is 6 digits long. The 6-digit number is encoded into the tag by converting it to its base 2 equivalent.

1.5 Mounting Code

This code describes how the genset is attached to a container or chassis. Following are the code assignments:

Table L.2 Data values for the Mounting code

Value	Description
0	Not used/other
1	Underslung
2	“Clip on” (nose mount)
3	Nitrogen clip
4–7	Reserved for future use

1.6 Tare Weight

The Tare Weight field is indicated in hundreds of kilograms or pounds. To encode the tare weight into the tag, the metric value from 0 to 6,300 kilograms is converted to the equivalent base 2 value.

1.7 Fuel Capacity

This code specifies the fuel capacity of the genset in 40-L increments as follows:

Table L.3 Data values for the Fuel Capacity code

Value	Description
0	Not used
1	150 L or less
2	151–190 L
3	191–230 L
4	231–270 L
5	271–310 L
6	311–350 L
7	351–390 L
8	391–430 L
9	431–470 L
10	471–510 L
11	511–550 L
12	551–590 L
13	591–630 L
14	631–670 L
15	More than 670 L

1.8 Voltage

This code specifies the voltage of the genset as follows:

Table L.4 Data values for the Voltage code

Value	Description
0	Not used/other
1	230 V
2	460 V
3–7	Reserved

APPENDIX M
TAG DATA FORMAT FOR RAIL-COMPATIBLE MULTI-MODAL EQUIPMENT

(INCLUDES ROADRAILER-TYPE EQUIPMENT AND BI-MODAL MAINTENANCE-OF-WAY EQUIPMENT)

1.0 DATA FIELD DESCRIPTIONS FOR THE RAIL COMPATIBLE MULTI-MODAL TAG

Fields specified by the standard are listed in Table M.1. User fields are indicated in **bold** type. A description of each user field is presented in the paragraphs following Table M.1.

Table M.1 Data field descriptions for the Rail Compatible Multi-Modal tag

Entry	Bits Required	Tag Data Sequences	Minimum Value	Maximum Value	Unit
Equipment Group Code	**5**	**0–4**	**0**	**31**	**Type Code**
Tag Type	**2**	**5–6**	**1**	**4**	**Type Code**
Equipment Initial (Mark)	**19**	**7–25**	**A**	**ZZZZ**	**Alpha**
Equiment Number	**20**	**26–45**	**0**	**999999**	**Numeric**
Side Indicator Code	**1**	**46**	**0**	**1**	**Side Code**
Length	**12**	**94–96,***	**0**	**4095**	**Decimeters**
		47–55	**[0**	**1343**	**Feet]**
Number of Rail Axles	**5**	**56–59, 64**	**1**	**32**	**Axles**
First Check Sum	2	60–61			
Reserved Frame Marker	2	62–63			
Bearing Type Code	**3**	**65–67**	**0**	**7**	**Type Code**
Platform Identifier Code	**4**	**68–71**	**0**	**15**	**Platform Code**
Type Detail Code	**6**	**72–77**	**0**	**15**	**Type Code**
Spare	**16**	**78–93**			**Available for Owner's Use**
Reserved	9	97–105			
Security	12	106–117			Reserved for Security or Limited Owner's Use
Data Format Code	6	118–123			
Second Check Sum	2	124–125			
Frame Marker	2	126–127			

* Bit order shall be 94, 95, 96, 47, 48...55.

Table M.1.1 Data field descriptions for the Steel Wheel Railsets for Carless Technology (bogies) tag

Entry	Bits Required	Tag Data Sequences	Minimum Value	Maximum Value	Unit
Equipment Group Code	**5**	**0–4**	**0**	**31**	**Type Code**
Tag Type	**2**	**5–6**	**1**	**4**	**Type Code**
Equipment Initial (Mark)	**19**	**7–25**	**A**	**ZZZZ**	**Alpha**
Equiment Number	**20**	**26–45**	**0**	**999999**	**Numeric**
Side Indicator Code	**1**	**46**	**0**	**1**	**Side Code**
Length	**12**	**94–96,***	**3**	**3**	**Decimeters**
		47–55	**[1**	**1**	**Feet]**
Number of Rail Axles	**5**	**56–59, 64**	**1**	**32**	**Axles**
First Check Sum	2	60–61			
Reserved Frame Marker	2	62–63			
Bearing Type Code	**3**	**65–67**	**0**	**7**	**Type Code**
Platform Identifier Code	**4**	**68–71**	**0**	**0**	**Platform Code**
Type Detail Code	**6**	**72–77**	**3**	**3**	**Type Code**
Spare	**16**	**78–93**			**Available for Owner's Use**
Reserved	9	97–105			
Security	12	106–117			Reserved for Security or Limited Owner's Use
Data Format Code	6	118–123			
Second Check Sum	2	124–125			
Frame Marker	2	126–127			

* Bit order shall be 94, 95, 96, 47, 48...55.

Table M.2 Data field descriptions for the Coupler-Mate tag

Entry	Bits Required	Tag Data Sequences	Minimum Value	Maximum Value	Unit
Equipment Group Code	**5**	**0–4**	**0**	**31**	**Type Code**
Tag Type	**2**	**5–6**	**1**	**4**	**Type Code**
Equipment Initial (Mark)	**19**	**7–25**	**A**	**ZZZZ**	**Alpha**
Equiment Number	**20**	**26–45**	**0**	**999999**	**Numeric**
Side Indicator Code	**1**	**46**	**0**	**1**	**Side Code**
Length	**12**	**94–96,***	**18**	**18**	**Decimeters**
		47–55	**[6**	**6**	**Feet]**
Number of Rail Axles	**5**	**56–59, 64**	**1**	**32**	**Axles**
First Check Sum	2	60–61			
Reserved Frame Marker	2	62–63			
Bearing Type Code	**3**	**65–67**	**0**	**7**	**Type Code**
Platform Identifier Code	**4**	**68–71**	**0**	**0**	**Platform Code**
Type Detail Code	**6**	**72–77**	**2**	**2**	**Type Code**
Spare	**16**	**78–93**			**Available for Owner's Use**
Reserved	9	97–105			
Security	12	106–117			Reserved for Security or Limited Owner's Use
Data Format Code	6	118–123			
Second Check Sum	2	124–125			
Frame Marker	2	126–127			

* Bit order shall be 94, 95, 96, 47, 48...55.

Siemens EX1030
Page 81 of 177

Table M.3 Data field descriptions for the Steel Wheel Railsets for Carless Technology (bogies) tag

Entry	Bits Required	Tag Data Sequences	Minimum Value	Maximum Value	Unit
Equipment Group Code	**5**	**0–4**	**0**	**31**	**Type Code**
Tag Type	**2**	**5–6**	**1**	**4**	**Type Code**
Equipment Initial (Mark)	**19**	**7–25**	**A**	**ZZZZ**	**Alpha**
Equiment Number	**20**	**26–45**	**0**	**999999**	**Numeric**
Side Indicator Code	**1**	**46**	**0**	**1**	**Side Code**
Length	**12**	**94–96,***	**0**	**4095**	**Decimeters**
		47–55	**[0**	**1343**	**Feet]**
Number of Rail Axles	**5**	**56–59, 64**	**1**	**32**	**Axles**
First Check Sum	2	60–61			
Reserved Frame Marker	2	62–63			
Bearing Type Code	**3**	**65–67**	**0**	**7**	**Type Code**
Platform Identifier Code	**4**	**68–71**	**0**	**0**	**Platform Code**
Type Detail Code	**6**	**72–77**	**5**	**5**	**Type Code**
Spare	**16**	**78–93**			**Available for Owner's Use**
Reserved	9	97–105			
Security	12	106–117			Reserved for Security or Limited Owner's Use
Data Format Code	6	118–123			
Second Check Sum	2	124–125			
Frame Marker	2	126–127			

* Bit order shall be 94, 95, 96, 47, 48...55.

The fields are arranged in a hierarchical fashion in order to expedite processing by the data processor. It is intended that the data processor will first look at the Data Format code to determine if the tag should be ignored. For example, in some cases the data processor will wish to ignore all tags except those specified as rail (AAR standard) or intermodal tags.

Once the Data Format code has been processed, then the data processor will look to the Tag Type to determine the configuration, capabilities, and memory capacity of the tag. Next, the data processor will examine the Equipment Group code to determine if the tagged equipment is relevant.

The order in which the remaining fields are processed will be dictated by the particular application.

1.1 Equipment Group Code

This is a numeric field having a value from 0 to 31 that indicates the general type of equipment. Only major categories of equipment types are indicated in this field and other fields are allotted to indicate farther details. The Equipment Group code for Rail-Compatible Multi-Modal equipment is decimal 24 (binary 11000).

1.2 Tag Type

The Tag Type indicates the configuration, capability, and memory size of the tag. Tag Type = 2 describes this tag specified by this AAR standard.

To code the Tag Type value into the tag, the decimal value is reduced by 1 and converted to its base 2 equivalent.

1.3 Equipment Initial

The Equipment Initial is composed of four letters and can be represented as C1, C2, C3, C4. To code this information in the tag, the possible letters represented by C1 will be assigned to the following decimal values: A = 0, B = 1, C = 2, ...Z = 25. The letters C2, C3, and C4 will be assigned the following values: Blank = 0, A = 1, B = 2, ...Z = 26. This code assignment allows for an Initial of less than four characters, with the actual characters left justified, and the remainder of the field padded with blanks.

Conversion from alpha to numeric would involve the following:

1.3.1 Determine the numeric equivalent of characters C1 through C4. This will result in four numeric values, N1 through N4.

1.3.2 Convert N1 through N4 into one numeric value by using the following formula:

$$\text{Value} = (N1 \times 27^3) + (N2 \times 27^2) + (N3 \times 27) + N4$$

The base 2 equivalent of the decimal number “Value” is stored in the tag's Equipment Initial field.

Conversion from a base 2 tag format back to the four letters would involve the following, where “Value” is the decimal equivalent of the base 2 value in the Equipment Initial field.

1. $N1 = \text{Value}/27^3$ (integer—drop fractions)
2. $N2 = (\text{Value} - (N1 \times 27^3))/27^2$ (integer)
3. $N3 = (\text{Value} - ((N1 \times 27^3) + (N2 \times 27^2)))/27$ (integer)
4. $N4 = \text{Value} - ((N1 \times 27^3) + (N2 \times 27^2) + (N3 \times 27))$
5. Use the letter-to-number assignments referred to above to convert N1 through N4 from a numeric value to its letter equivalent.

1.4 Equipment Number

The Equipment Number is encoded into the tag by converting the decimal value from 0 to 999999 to a binary value (a conversion from base 10 to base 2).

1.5 Side Indicator Code

The Side Indicator code indicates whether the tag is installed on the left or right side of the equipment. For railcars, the right or left side is in reference to a person facing the car from the handbrake end (B end) of the car (see diagram, Exhibit A). The right side of the equipment is assigned a binary value 1 and the left side is assigned a binary value 0.

1.6 Length

The exterior length is measured as specified by the *UMLER Data Specification Manual*. To encode the data into the tag, the metric value from 0 dm to 4095 dm is converted to a base 2 equivalent value. 4095 dm shall also apply to all lengths more than 4095 dm.

1.7 Number of Rail Axles

This field indicates the number of rail axles on a vehicle. To encode the Number of Axles into the tag, the decimal value from 1 to 32 is reduced by 1 and converted to base 2. However, for vehicles with more than 32 axles or with no rail axles (e.g., RoadRailer Mark IV), use the decimal value 32, reduce by 1, and convert to base 2. Thus, when reading this field, “32 axles” would mean either no rail axles or 32 or more rail axles.

Siemens EX1030
Page 83 of 177

1.8 Bearing Type Code

To encode the (rail) Bearing Type code into the tag, the decimal value of 0 through 7 must be converted to the equivalent base 2 value. Table M.4 presents a description of each Bearing Type code value.

Table M.4 Data values for the Bearing Type code

Value	Description
0	Plain bearings
1	Roller bearings, not otherwise classified
2	Roller bearings, inboard
3	Roller bearings, 3-axle truck, 1 axle obstructed ("buckeye design")
4	Roller bearings, plain bearing housing
5	Roller bearings, cylindrical oil filled
6	Reserved
7	No rail axle or bearings

1.9 Platform Identifier Code

Table M.5 presents the values assigned to each platform identifier code. *All equipment except articulated railcars shall be assigned the value 0.* For multi-unit cars, “B” is assigned to the platform stenciled “B” and “A” is assigned to the extreme opposite platform. Platforms adjacent to the “B” platform are assigned “C,” “D,” “E,” etc., in a sequential manner for consecutive platforms moving away from the “B” platform. To encode the Platform Identifier code into the tag, the decimal value from 0 to 15 must be converted to its equivalent base 2 value.

Table M.5 Data values for the Platform Identifier code

Value	Description
0	All equipment except articulated railcars (includes single platform cars)
1	“A” platform
2	“B” platform
3	“C” platform
4	“D” platform
5	“E” platform
6	“F” platform
7	“G” platform
8	“H” platform
9	“I” platform
10	“J” platform
11	“K” platform
12	“L” platform
13	“M” platform
14	“N” platform
15	“O” platform—also applies for platforms beyond the 15th

1.10 Type Detail Code

To encode the Type Detail code into the tag, the decimal value from 0 to 15 must be converted to the equivalent base 2 value. Table M.6 lists each Type Detail code value. The decimal value 0 represents no Type code provided.

Table M.6 Data values for the Type Detail code

Value	Description
0	Data not provided
1	Adapter car (stand-alone vehicle to connect roadrailer to conventional equipment)
2	Transition rail truck (e.g., coupler mate—rail truck used to connect roadrailer to conventional equipment)
3	Rail truck (bogie)
4	Rail compatible trailer, with integral rail wheels (e.g., Roadrailer Mark IV)
5	Rail compatible trailer, without integral rail wheels (e.g., Roadrailer Mark V)
6	Bi-modal maintenance-of-way equipment
7–9	Reserved
10	Iron highway platform unit
11	Iron highway power unit
12–63	Reserved

1.11 Spare

This field can be encoded for any use by the owner.

APPENDIX N
SEVEN-BIT ASCII TABLE

ASCII Character or Control	Decimal Value	ASCII Character or Control	Decimal Value	ASCII Character or Control	Decimal Value
NUL	0	+	43	V	86
SOH	1	,	44	W	87
STX	2	-	45	X	88
ETX	3	.	46	Y	89
EOT	4	/	47	Z	90
ENQ	5	0	48	[	91
ACK	6	1	49	\	92
BEL	7	2	50	]	93
BS	8	3	51	^(↑)	94
HT	9	4	52	_(←)	95
LF	10	5	53	.	96
VT	11	6	54	a	97
FF	12	7	55	b	98
CR	13	8	56	c	99
SO	14	9	57	d	100
SI	15	:	58	e	101
DLE	16	;	59	f	102
DCI (X-ON)	17	<	60	g	103
DC2 (TAPE)	18	=	61	h	104
DC3 (X-OFF)	19	>	62	i	105
CD4 (TAPE)	20	?	63	j	106
NAK	21	@	64	k	107
SYN	22	A	65	l	108
ETB	23	B	66	m	109
CAN	24	C	67	n	110
EM	25	D	68	0	111
SUB	26	E	69	p	112
ESC	27	F	70	q	113
FS	28	G	71	r	114
GS	29	H	72	s	115
RS	30	I	73	t	116
US	31	J	74	u	117
SP	32	K	75	v	118
!	33	L	76	w	119
“	34	M	77	x	120
#	35	N	78	y	121
$	36	0	79	z	122
%	37	P	80	{	123
&	38	Q	81	|	124
‘	39	R	82	} (Alt Mode)	125
(	40	S	83	≈	126
)	41	T	84	DEL (Rub Out)	127
*	42	U	85		

APPENDIX O
SIX-BIT ASCII TABLE

ASCII Character	Decimal Value	ASCII Character	Decimal Value
(space)	0	@	32
!	1	A	33
“	2	B	34
#	3	C	35
$	4	D	36
%	5	E	37
&	6	F	38
‘	7	G	39
(	8	H	40
)	9	I	41
*	10	J	42
+	11	K	43
,	12	L	44
-	13	M	45
.	14	N	46
/	15	O	47
0	16	P	48
1	17	Q	49
2	18	R	50
3	19	S	51
4	20	T	52
5	21	U	53
6	22	V	54
7	23	W	55
8	24	X	56
9	25	Y	57
:	26	Z	58
;	27	[	59
<	28	\	60
=	29	]	61
>	30	^	62
?	31	_(underline)	63

APPENDIX P
FORMAT OF DATA SENT FROM READER TO DATA PROCESSOR

1.0 SCOPE

This section is included to provide a specific description as to how data are output from the Reader in the current Amtech system. This standard does not require that this data output format be utilized.

2.0 READER FUNCTIONS

The reader is responsible for decoding the radio frequency information collected by the reader's antenna into binary information equivalent to the 128 bits of data stored in the tag. As part of this decoding exercise, the reader must first collect the data and check for various errors. Check Sums and Frame Markers are used to detect errors and synchronize the data collection process. Both of these fields are for internal use only and are not transmitted from the reader to the data processor. All other fields are relayed from the reader to the data processor.

3.0 ENCODING THE DATA INTO ASCII FORMAT

The Reader uses the standard ASCII data format for communicating with the data processor. In order to transfer the 120 bits (128 minus the Frame Markers and Check Sums) of data using 7-bit ASCII, the reader must split apart the 120 bits into smaller, more manageable pieces. To accomplish this, the reader partitions the 120 bits into contiguous 6-bit partitions This means that there are 20 six-bit partitions created. The base 2 value of each partition is converted to a decimal value that has a corresponding ASCII value that falls somewhat short of the full 7-bit ASCII table. In order to code the 6-bit partitions into ASCII coding, the reader uses the 6-bit ASCII table.

The sole purpose for limiting the partitions to 6 bits and using the 6-bit ASCII coding is to provide a set of ASCII characters that does not include the various command and control characters indicated in the 7-bit ASCII table. For example, the 7-bit ASCII table would allow the reader to transmit a control-C, form feed, carriage return, etc., to a data processor or modem, which may result in undesirable actions.

Thus, the reader partitions 20 six-bit segments and encodes this data into a 6-bit ASCII format. This 6-bit ASCII format is then converted to 7-bit ASCII for transmission to the data processor. This conversion to 7-bit ASCII is done by adding *32* decimal to the 6-bit value. For example, the base 2 value 010000 would be converted to the 6-bit ASCII character 0 (zero). This ASCII character corresponds to a table value of 48 in the 7-bit ASCII table. The Reader converts the 6-bit value to the 7-bit value and transmits the 7-bit value to the data processor.

4.0 DATA ENCODE AND DECODE EXAMPLE

Suppose an installer programs a tag with the following information:

Equipment Group code	D (Locomotive)
Tag Type	128-bit tag (AAR Type)
Owner's code	KMCX
Locomotive number	1587234
Length	120
No. of axles	4
Bearing Type code	2
Side indicator	1 (right side)
Security	##

The corresponding base 2 values stored in the tag would be as follows:

Equipment Group code	00101

Tag Type	01
Owner's code	0110010011001001100
Locomotive number	000110000011100000100010
Length	001111000
No. of axles	00100
First Check Sum	11
Reserved Frame Marker	11
Bearing Type code	010
Side indicator	1
Spare/Reserved	00000000000000000000000000000000
Security	000011000011
Data Format code	110011
Second Check Sum	11
Frame Marker	Special bit pattern

The corresponding 20 characters sent by the Reader to the data processor are as follows:

*LF3!@X(CP10_____##S(Underscore represents a blank)

Also, the actual data from the Reader may have additional characters before and after the above character string that are used to indicate time and date, antenna number, etc.

5.0 READER TRANSMISSION FORMATS

The reader transmits the following information to the host computer:

- Tag data
- Error messages
- Sensor input reports
- Sign-on message
- Modem connect or disconnect messages.

Tag ID codes, error messages, sensor input reports, and modem connect/disconnect messages can have optional information appended to them. Whenever time or time and date are appended, they apply equally to tag ID codes, error messages, sensor input reports, and modem connection messages. Auxiliary information can be appended to tag ID codes and sensor input reports, but not to error reports or modem messages.

6.0 TAG DATA CONTENT ONLY

The tag data is transmitted with a "start of message" sign followed by 20 characters. Spaces are legitimate characters, and if the tag data is not 20 characters long, spaces are appended to the tag data to make 20 characters. For example,

#12345678901234567890

#ABC 12347655 TARE

To transmit tag data with no appended information, enter both #300 and #310 commands.

The "#" sign is a "start of message" character. This character may be assigned six different values as follows:

#	[23 hex]
‘	[60 hex]
{	[8B hex]
|	[7C hex]
}	[7D hex]
~	[7E hex]

Of these choices, it is recommended that the tilde (~) be used as the start of message character, although the other start of message characters may be used at the discretion of the user. Although the "#" sign is used as the sample start of message character here, it may occur within the data portion of the message, and thus should be avoided as a start of message character.

7.0 ERROR MESSAGE ONLY

Error messages are in the format of the "#," the word "Error," and a 2-digit error code. For example,

#Error 02

#Error 03

To transmit the error code only, enter the #300 command. This command removes the time and date.

8.0 SENSOR INPUT REPORTS ONLY

Sensor input reports are in the format of the "#," the words "SENSOR INPUT REPORT," and a space. There are 21 characters total, including the "#" character.

Note: Sensor input reports are not automatic, but must be requested through the #6901 SENSOR INPUT REPORTS ENABLED command.

9.0 SIGN-ON MESSAGE

The sign-on message is in the following format:

#Model A11200 ver X.X SNYYYYY

#Copyright 1988 AMTECH Corp.

The sign-on message never contains any appended information.

10.0 TIME ONLY APPENDED

Time can be appended to tag data, error messages (except Error 01), sensor input reports, and modem connect/disconnect messages. The format of the transmission is as follows:

#<string>&HH:MM: SS.hh

where

<string> is the tag data, error message, or sensor input report

HH:MM:SS.hh represent hours, minutes, seconds, and hundredths of seconds, respectively

Colons(:) separate hours, minutes, and seconds

A period (.) separates hundredths of seconds

The "&" character provides a means for the host computer to determine if time is appended to the string.

Note: Hundredths of seconds are not appended to error messages.

11.0 TIME AND DATE APPENDED

Time and date can be appended to tag data, error messages (except Error 01), sensor input reports, and modem connect/disconnect messages. The format of the transmission is as follows:

#<string>&HH:MM:SS.hh MM/DD/YY

The format is exactly like paragraph 10.0, "Time Only Appended," except that two spaces and the date follow the time. MM, DD, and YY represent the month, day, and 2-digit year, respectively. The forward slash (/) separates the month, day and year entries. Note: Hundredths of seconds are not appended to error messages.

12.0 AUXILIARY INFORMATION ONLY APPENDED

Auxiliary information can be appended to ID codes and sensor input reports. Auxiliary information is never appended to error or modem messages. Auxiliary information consists of reader number, antenna number, number of reads of previous tag, and sensor input status. The format is as follows:

#<string>%XX-Y-ZZ-Q

where

<string> is the tag data or sensor input report

XX represents the reader number in hex from 00 to FF

Y represents the antenna number (0 or 1 for antenna, M for manual ID entry, S for sensor input report)

ZZ is the number of reads of the previous tag in hex from 00 to FF

Q represents the sensor input status in hex from 0 to F.

The % character provides a means for the host computer to determine if auxiliary information is appended to the string.

The – separates the values of the auxiliary information.

13.0 TIME AND AUXILIARY INFORMATION APPENDED

Time and auxiliary information can be appended to tag data and sensor input reports. The format is as follows:

#<string>&HH:MM:SS.hh%XX-Y-ZZ-Q

The time and auxiliary information follow the formats described above.

14.0 TIME, DATE, AND AUXILIARY INFORMATION APPENDED

Time, date, and auxiliary information can be appended to tag data and sensor input reports. This is the factory setting of the reader. The format is as follows:

#<string>&HH:MM:SS.hh MM/DD/YY%XX-Y-ZZ-Q

The time, date, and auxiliary information follow the formats described above.

EXHIBIT A

AEI TAG PLACEMENT WINDOW—4-AXLE RAIL AND PASSENGER CARS

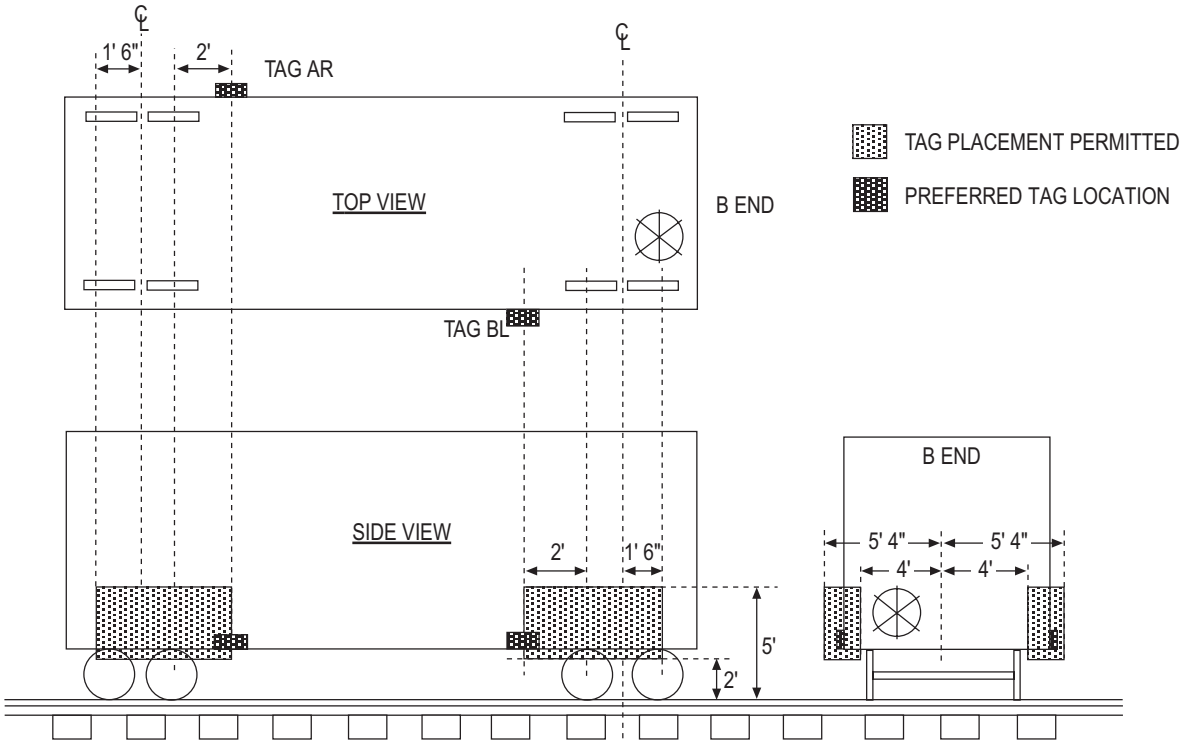

EXHIBIT A (CONTINUED)

AEI TAG PLACEMENT WINDOW—6-AXLE RAIL AND PASSENGER CARS

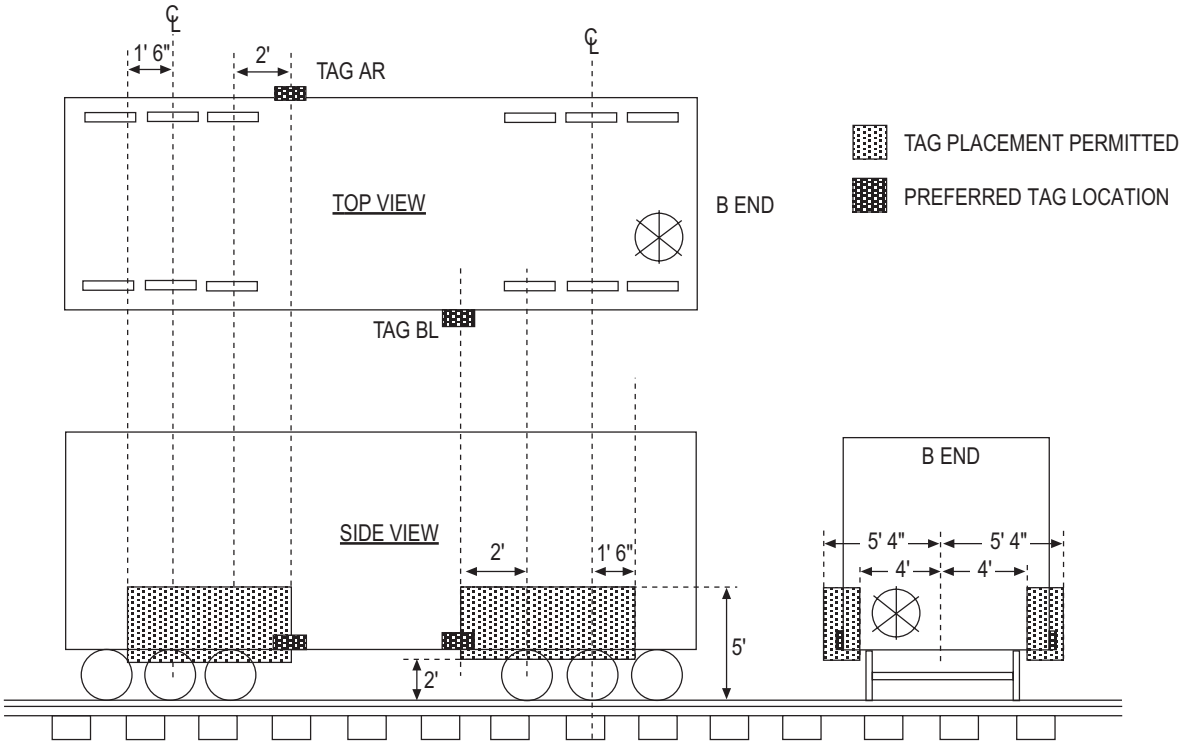

EXHIBIT A (CONTINUED)

AEI TAG PLACEMENT WINDOW—2-AXLE RAILCAR

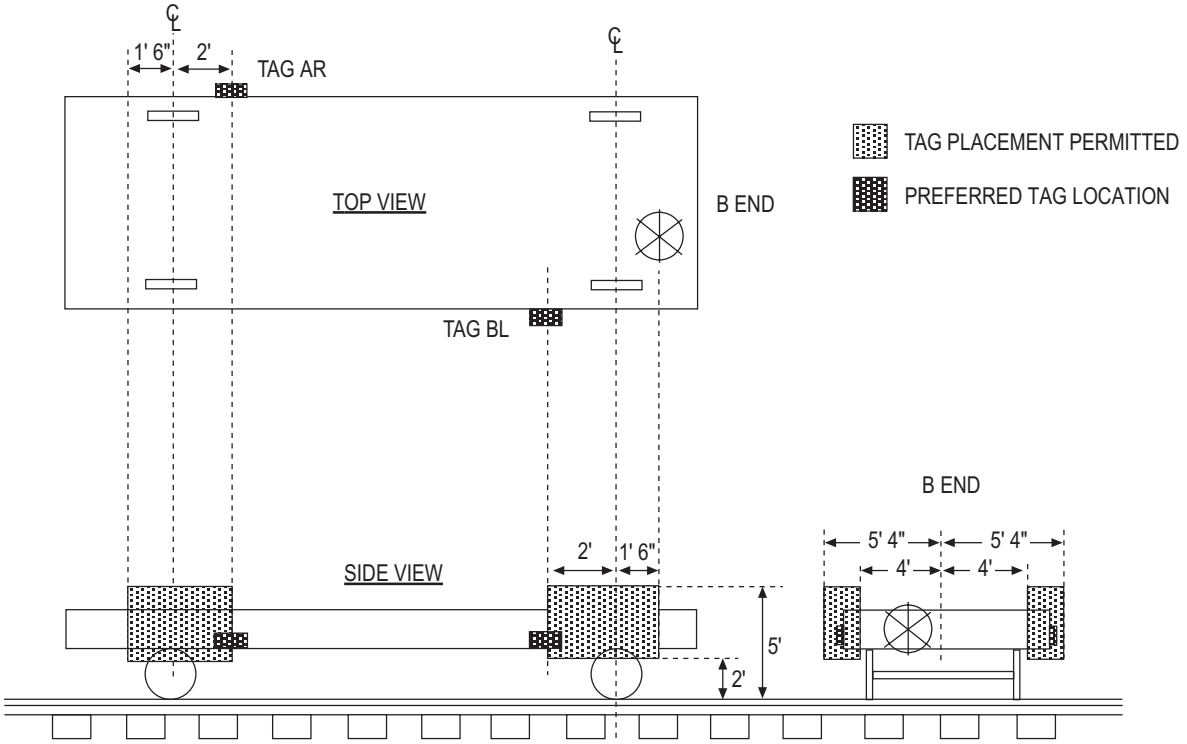

EXHIBIT B

AEI TAG PLACEMENT WINDOW—6-AXLE LOCOMOTIVE

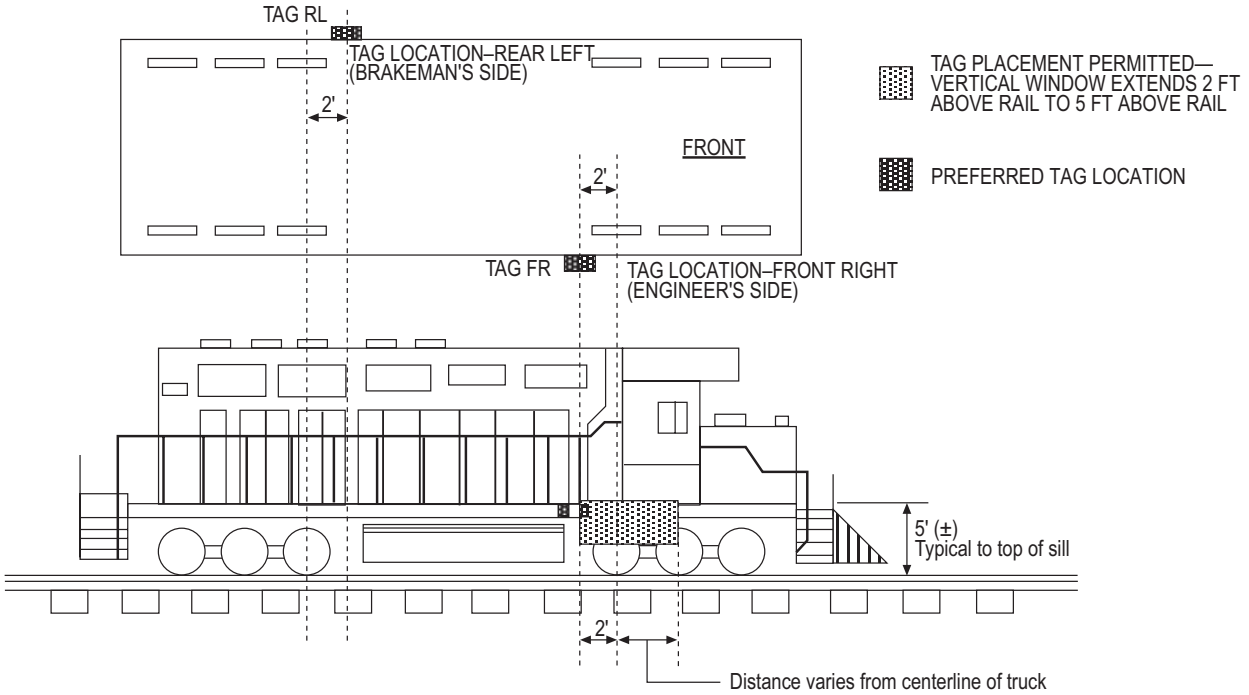

EXHIBIT B (CONTINUED)

AEI TAG PLACEMENT WINDOW—4-AXLE LOCOMOTIVE

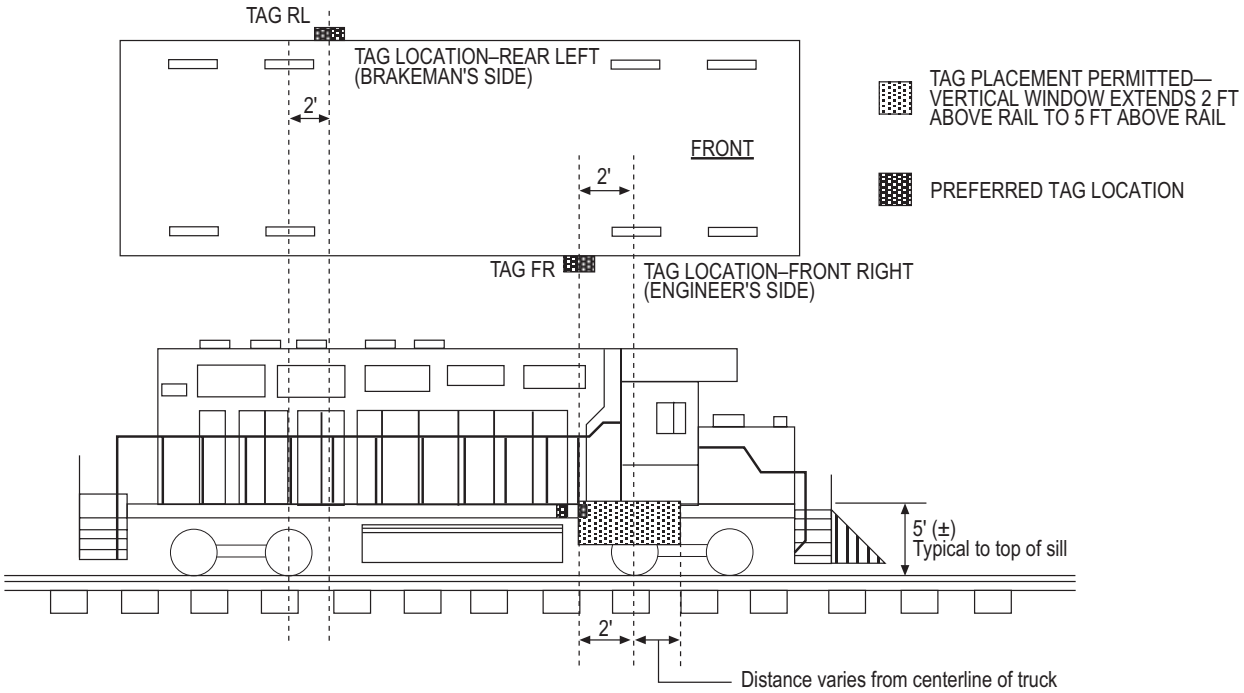

EXHIBIT C

TAG LOCATION—END-OF-TRAIN DEVICES

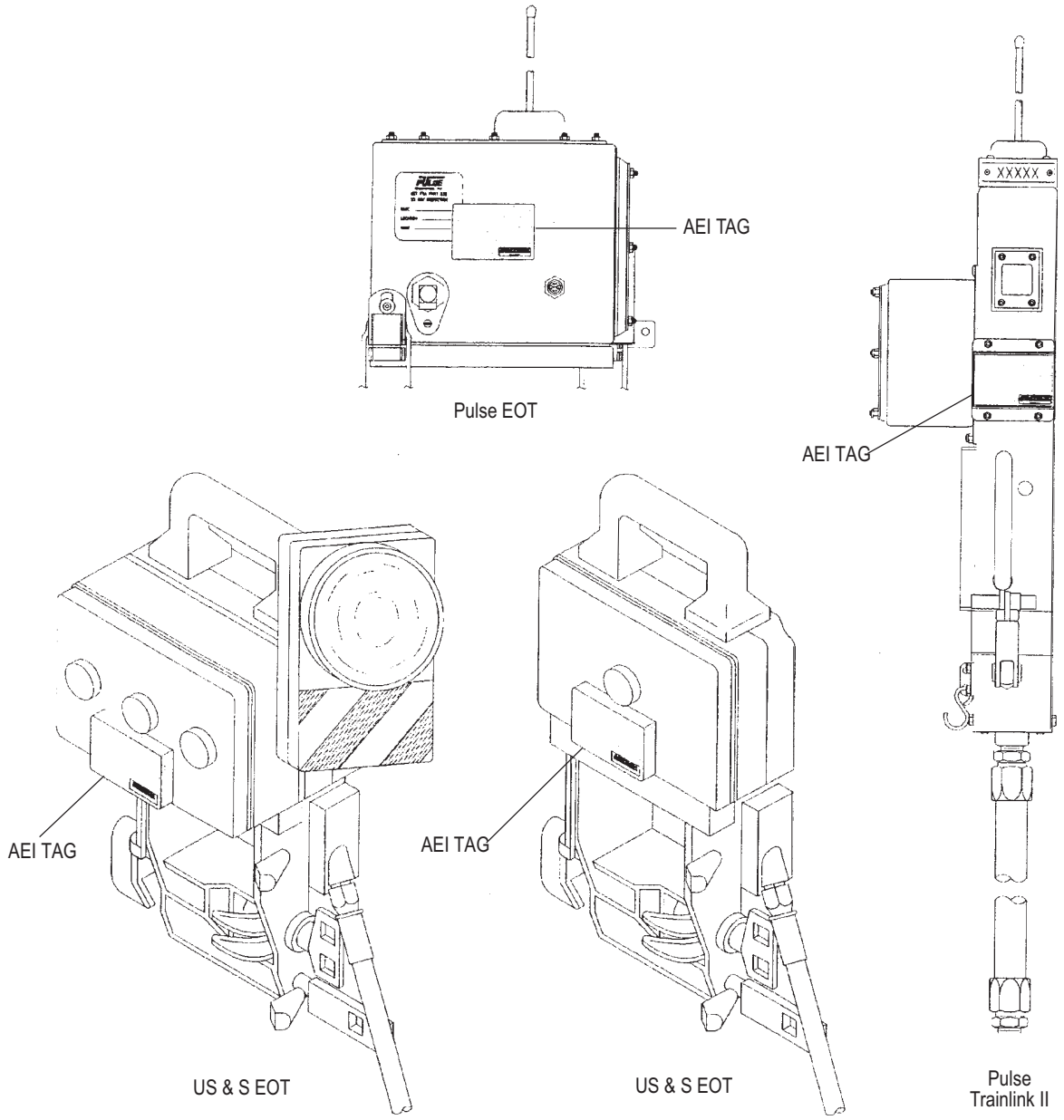

EXHIBIT D

TAG LOCATION FOR CONTAINERS OF 40 FT (12.2 M) OR LESS

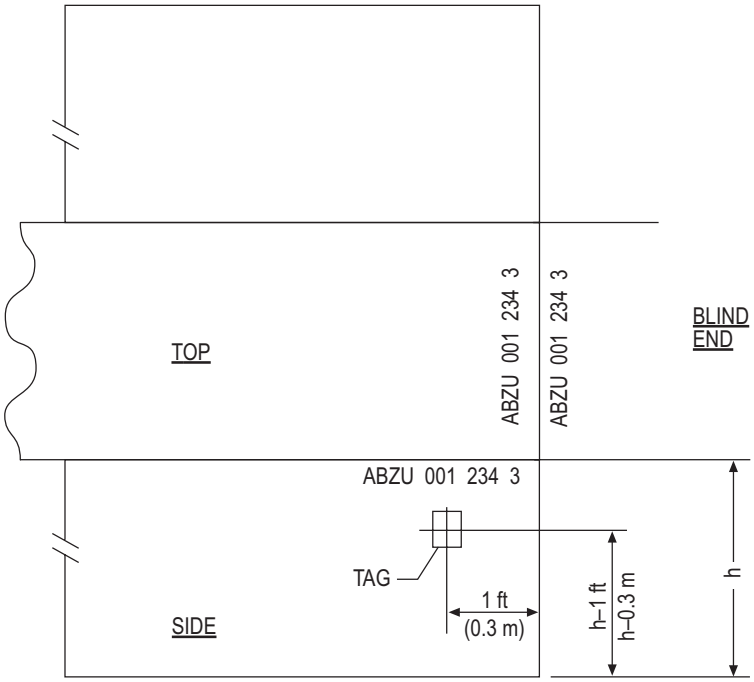

EXHIBIT D (CONTINUED)

TAG LOCATION FOR CONTAINERS LONGER THAN 40 FT (12.2 M)

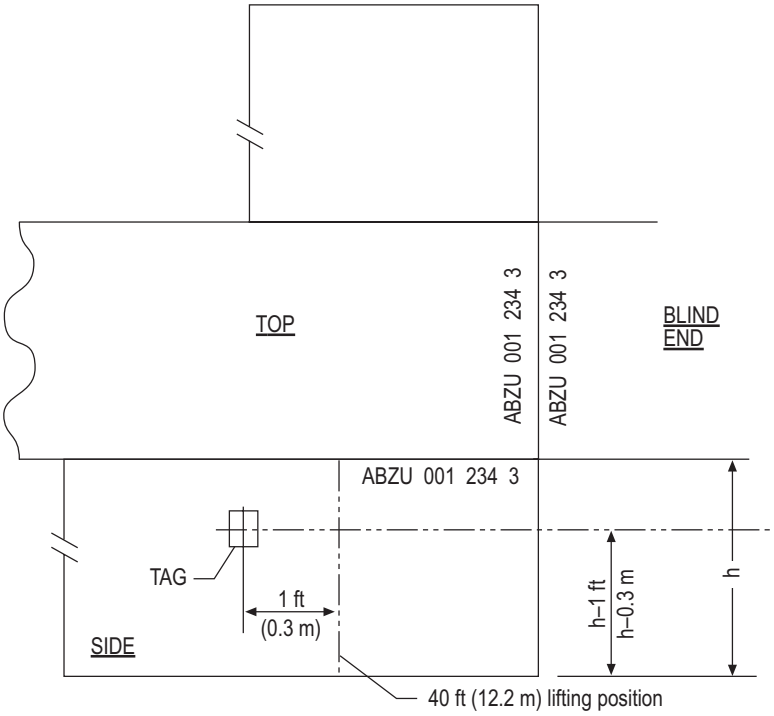

EXHIBIT E

RECOMMENDED TAG LOCATION—CHASSIS

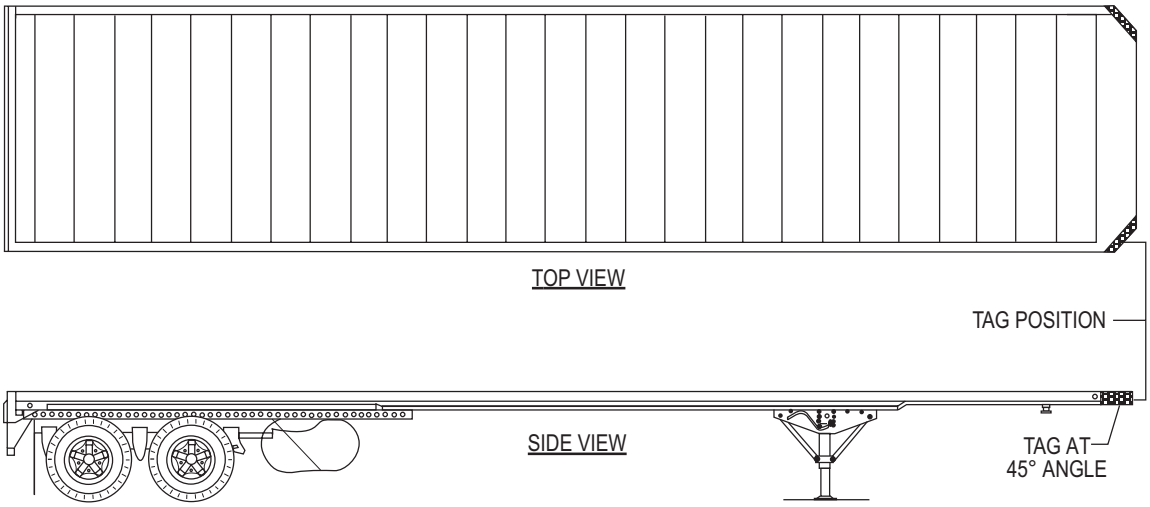

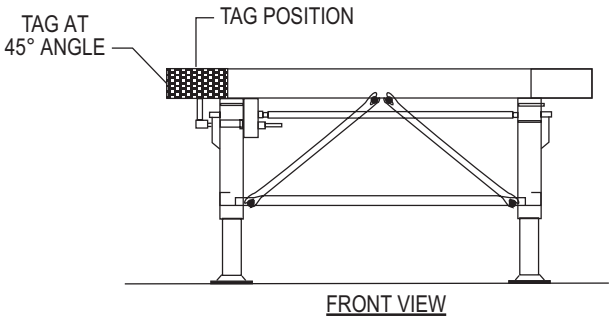

EXHIBIT F

ALTERNATIVE TAG PLACEMENT—CHASSIS

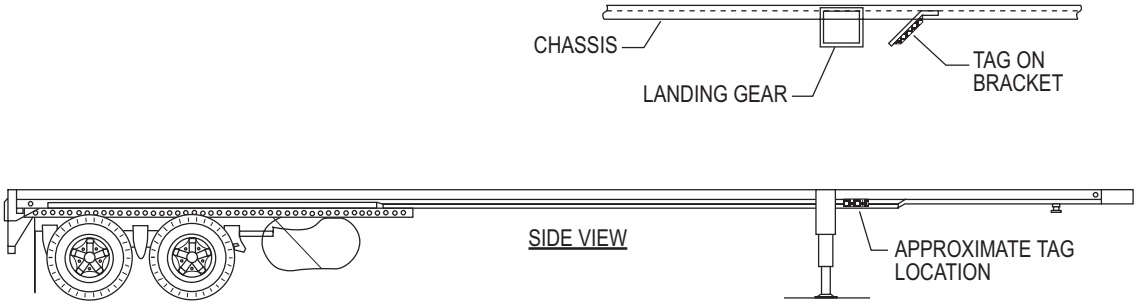

EXHIBIT G

ALTERNATIVE TAG PLACEMENT—CHASSIS

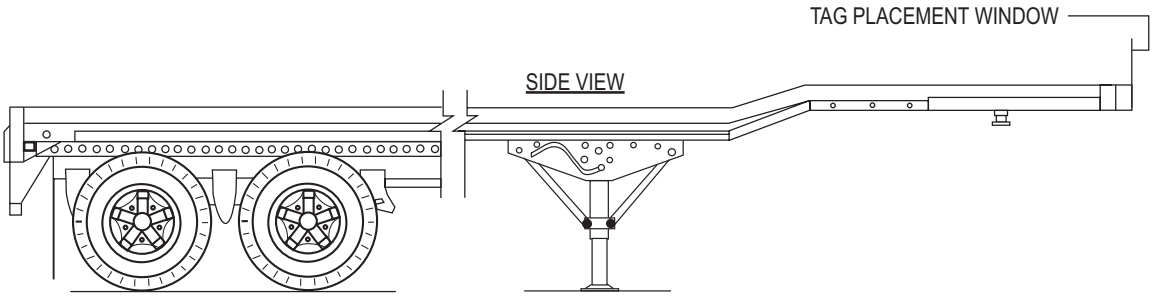

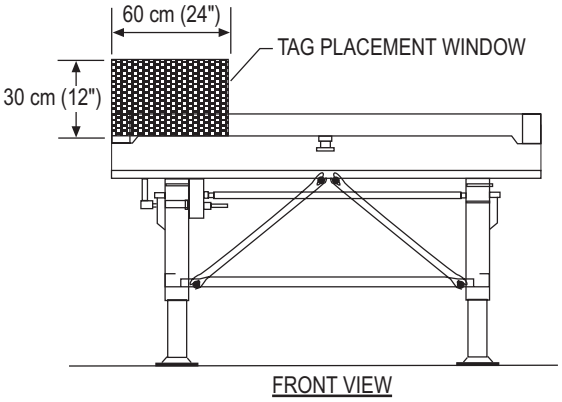

Siemens EX1030
Page 102 of 177

EXHIBIT H

RECOMMENDED TAG LOCATION—TRAILERS

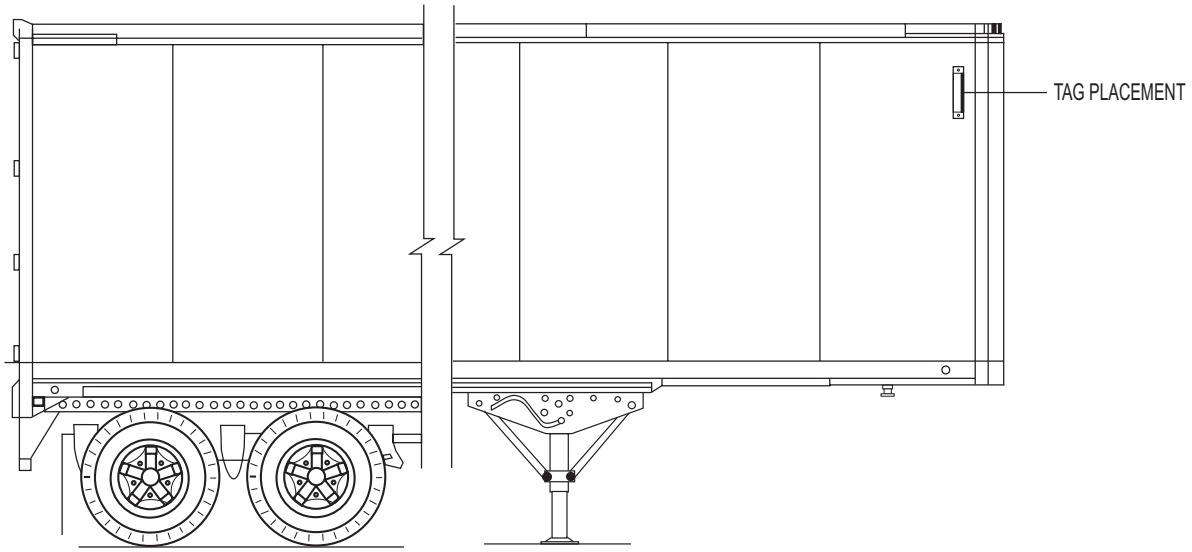

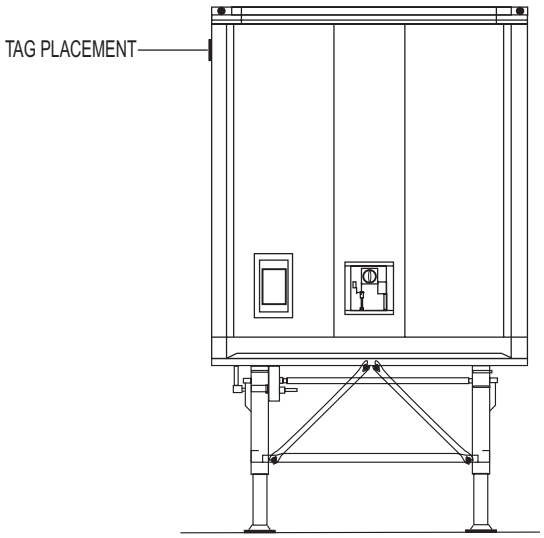

EXHIBIT I

RECOMMENDED TAG LOCATION—RAILCAR COVERS, ROOFS, AND HOODS

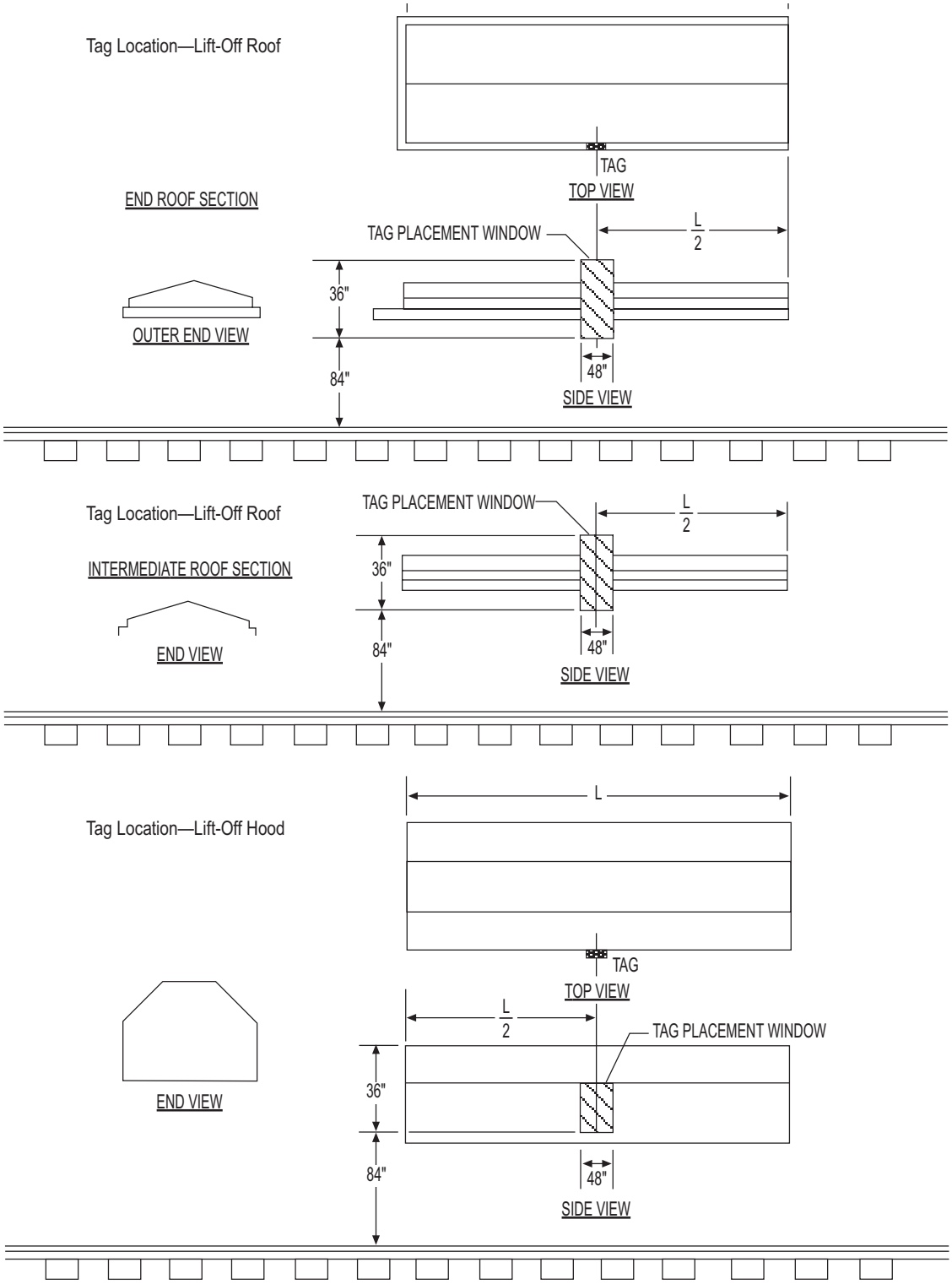

EXHIBIT J

RECOMMENDED TAG LOCATION—MULTIMODAL TRAILERS

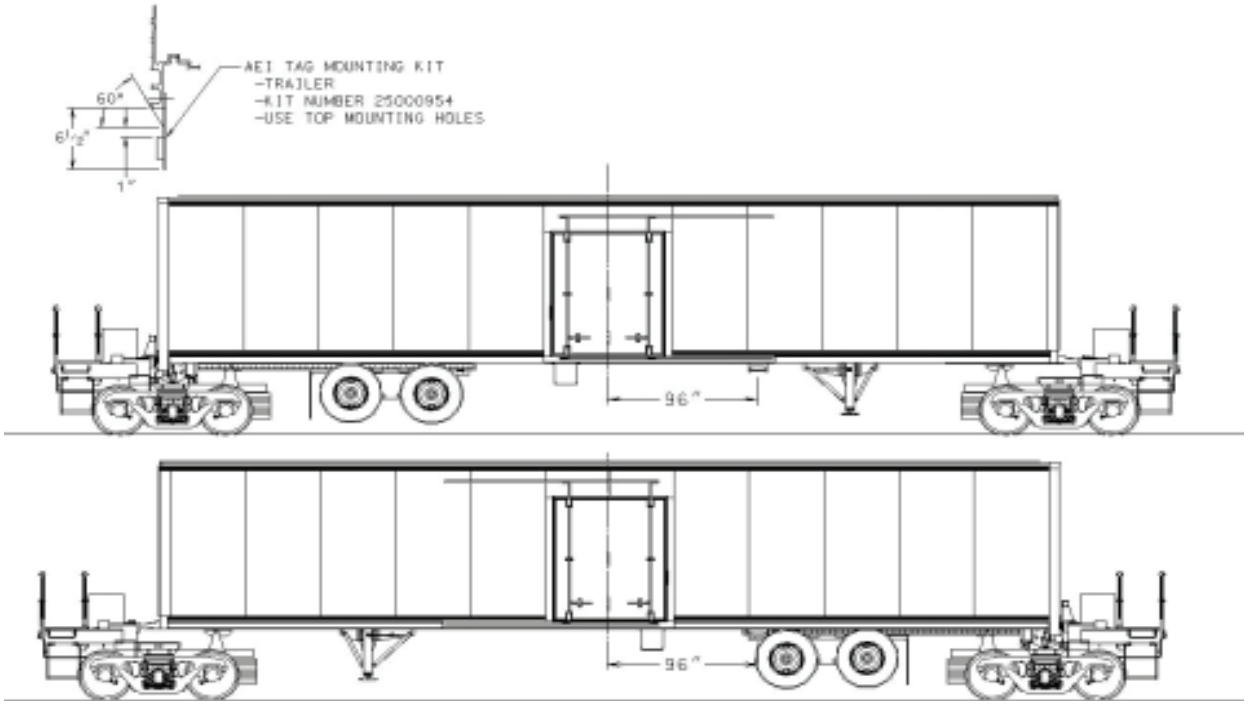

Siemens EX1030
Page 105 of 177

EXHIBIT K

RECOMMENDED TAG LOCATION—MULTIMODAL BOGIE

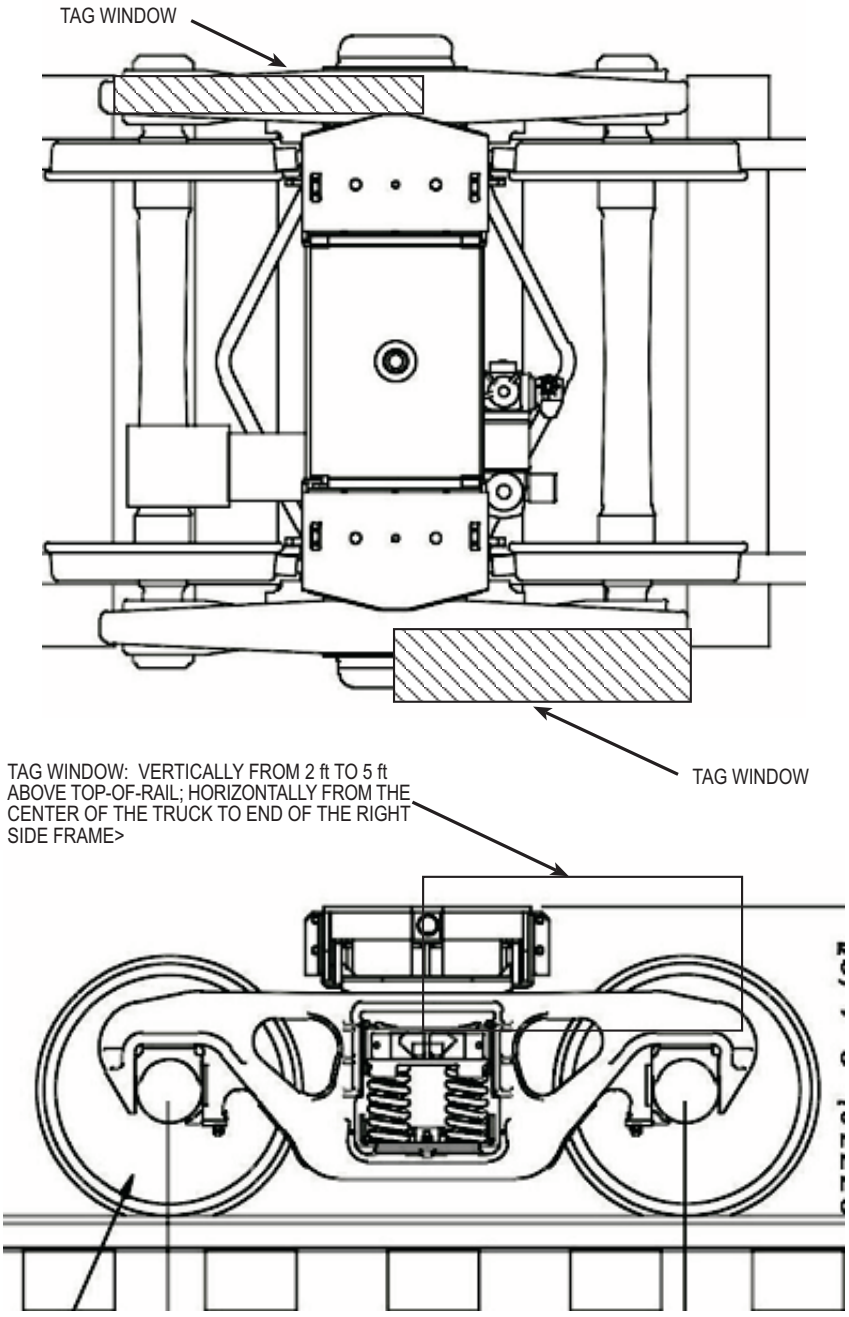

Siemens EX1030
Page 106 of 177

EXHIBIT L

RECOMMENDED TAG LOCATION—MULTIMODAL COUPLER-MATE

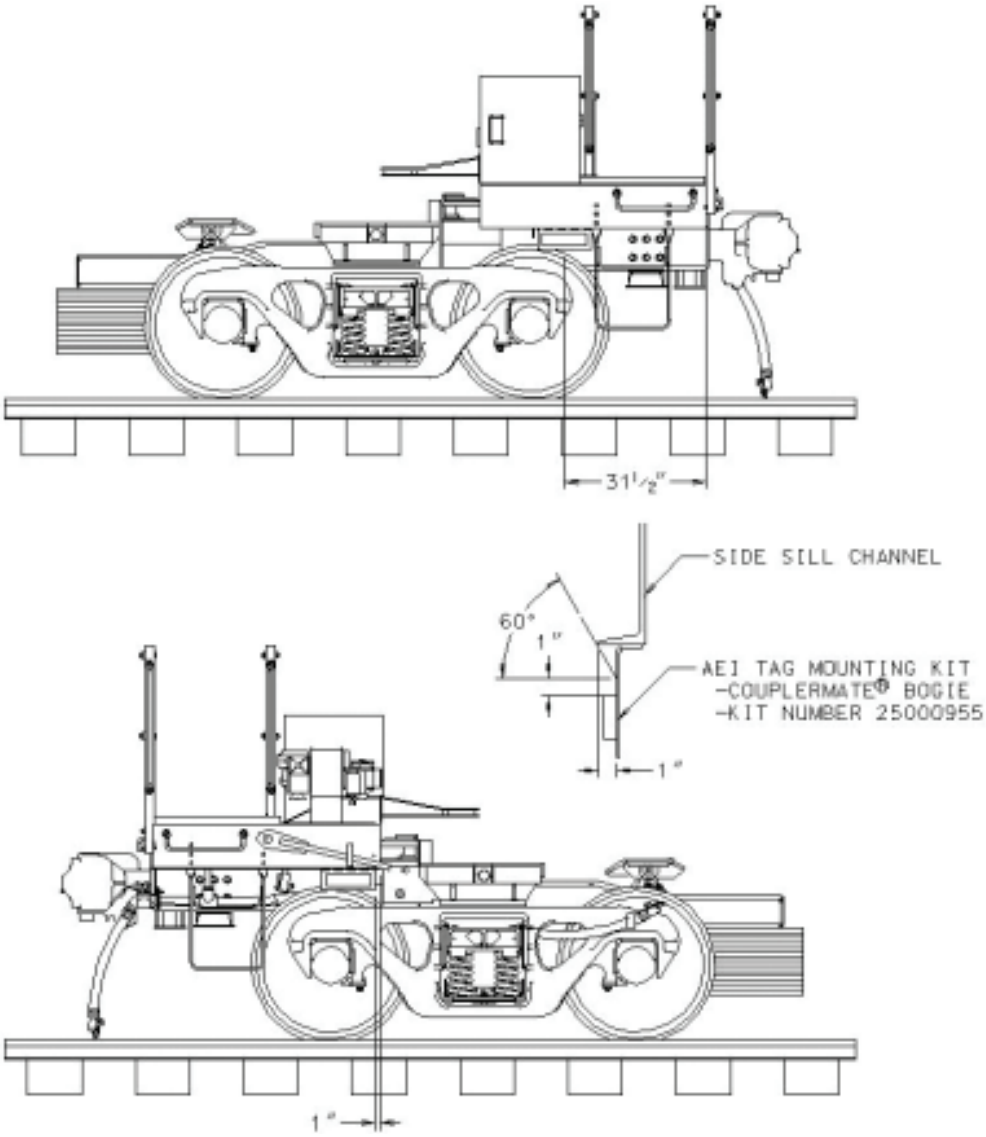

Siemens EX1030
Page 107 of 177

CHANGE RECORD SHEET

Revision	Formal Date of Release	Affected Pages	Purpose of Change and Applicable SPRs
1.1	2/2003	K–114	Added paragraph 10.4, Tag Reconditioning Requirements
1.1	2/2003	K–189–K–191	Added Exhibit J, Exhibit K, and Exhibit L addressing tag location on trailers and bogies

AEI SITE-TO-HOST CONSIST REPORT FORMAT

Standard
S-918A

Adopted: 2003

TABLE OF CONTENTS

Paragraph	Subject	Page No.
1.0	Introduction	K–195
1.1	Alphabetical Quick Reference	K–195
1.2	Configuration Options	K–195
2.0	Consist Reports	K–196
2.1	AEM—Consist Header Message	K–196
2.2	RRE—Rail Equipment	K–201
2.3	CEQ—Conveyed Equipment	K–203
2.4	EOT—End Of Train Device	K–205
2.5	EOC—End of Consist	K–206
2.6	DYL—Dynamic Locomotive	K–206
2.7	DYI—Dynamic Impact Recorder	K–209
2.8	DYR—Dynamic Refrigerator	K–212
2.9	ALM—Alarm Tag	K–215
2.10	GEN—Generator Set	K–216
2.11	HAT—Railcar Cover	K–218
2.12	TST—Test Tag	K–221
2.13	XAC—Acoustic Interface	K–221
2.14	XFW—Wheel Impact	K–223
2.15	XHB—Hot Box Interface	K–224
2.16	XHW—Hot Wheel Interface	K–227
2.17	XSC—Scale Interface	K–229
2.18	HWD—High/Wide Detector	K–230
2.19	DED—Dragging Equipment or Low Air Hose Detector	K–231
2.20	THI—Tag Health Information	K–232
2.21	RTD—Raw Tag Data	K–235
2.22	WRD—Equipment with Atypical Axle Patterns	K–236
2.23	MMR—Multi Modal Rail Equipment	K–238
2.24	SIM—System Integrity Messages	K–240
2.25	ECR—Environmental Condition Reporting	K–242
2.26	TRK—Track Identifier	K–244
2.27	Examples	K–246
3.0	Maintenance Reports	K–250
3.1	AMH—AEI Maintenance Header	K–250
3.2	MTS—Maintenance Data	K–251
3.3	MS—End Of Maintenance	K–252

Siemens EX1030
Page 109 of 177

Paragraph	Subject	Page No.
Appendix A	Tables	K–254
1.0	Data Values for the Equipment Group Codes (EGC)	K–254
2.0	Units of Measurement Information	K–255
3.0	Data Segments and Looping Structure	K–255
3.1	Looping Structure Example	K–258

1.0 INTRODUCTION

This document contains information about the AEI Site-to-Host consist report format developed by cooperating railroads and vendors, otherwise known as the "T-94" format. What follows is the current format, segments, and definitions as implemented by the AEI Users Group. As of February 1, 2003, newly purchased AEI readers or proxy server must be capable of communicating AEI data using the messages per this specification.

1.1 Alphabetical Quick Reference

AEM	Consist Header Message
ALM	Alarm Tag
AMH	AEI Maintenance Header
CEQ	Conveyed Equipment
DED	Dragging Equipment Detector
DYI	Dynamic Impact Recorder
DYL	Dynamic Locomotive
DYR	Dynamic Refrigerator
ECR	Environmental Condition Report
EMS	End of maintenance
EOC	End of consist
EOT	End of train Device
GEN	Generator Set
HAT	Railcar Cover
HWD	High/Wide Detector
MMR	Multimodal Rail Equipment
MTS	Maintenance Data
RRE	Rail Equipment (car and locomotive)
RTD	Raw Tag Data
SIM	System Integrity Message
THI	Tag Health Information
TRK	Track Identifier
TST	Test Tag
WRD	Equipment with Atypical Axle Patterns
XAC	Acoustic Interface
XFW	Wheel Impact Load Detector Interface
XHB	Hot Box Interface
XHW	Hot Wheel Interface
XSC	External Scale Interface

1.2 Configuration Options

1.2.1 Output

Output is standard, however the following three formats are available and user selectable:

- Fixed field lengths, no delimiters
- Fixed field lengths, delimiters
- Variable field lengths, delimiters

1.2.2 Segments

Any segment may be “turned off” and excluded from the report.

1.2.3 Elements

Any element may be “turned off” and excluded from the report. Note: Turning off elements may require the use of a delimited data format.

1.2.4 Units of Measure

English or metric units of measure are a reporting option. The unit of measure selected will apply to the entire report.

1.2.5 Maintenance Reports

The maintenance segment may be received as an attachment to the consist report or it may be sent to a unique phone number as a stand alone message.

1.2.6 Looping Structure

The data segments in the T-94 message are either required or optional as defined in the ‘Status’ field. Data segments must be transmitted according to the specified standard sequence of the T-94. Data segments may be repeated as individual data segments or as an unbounded loop. When a single data segment is allowed to be repeated, it will have a specified ‘Max Occurs’ value greater than 1. Loops of data segments are groups of two or more semantically related segments. In order to establish the start of the loop, the first data segment in the loop shall appear once and only once in each loop occurrence. The beginning segment of a loop shall not appear elsewhere in the loop. Loops may have a specified maximum number of occurrences indicated on the ‘Max Occurs’ value of the beginning segment of the loop. There is a specified sequence of segments in the loop. Loops in the T-94 message are optional, indicated by the ‘Status’ of the beginning segment of the loop. Each appearance of the beginning segment defines an occurrence of the loop. There are nested loops within outer loops in the T-94 message. The inner loop does not start with the same segment as an outer loop. The loop level 1 value indicates the outer loop. Segments with the same loop level 1 value and different loop level 2 values indicate they are part of an outer loop. The loop level 2 value indicates an inner loop. Segments with the same loop level 2 value indicate they are part of an inner loop. Refer to Appendix A, paragraph 3.0, “Data Segments and Looping Structure” and its accompanying example.

2.0 CONSIST REPORTS

2.1 AEM—Consist Header Message

2.1.1 Description

This is the opening segment for each consist. It contains information that applies to the train as a whole. It informs the host as to who the reporting site is, what time the train passed, and how many pieces of equipment were seen. In addition, it describes any abnormal software or hardware events that occurred while processing the consist. This is a mandatory segment. One AEM segment will be sent for each consist reported.

2.1.2 Other References

None.

2.1.3 Implementation Status

Complete.

2.1.4 Segment Summary

Ref	Field	Type	Size
AEM00	Segment ID	AN	3
AEM01	AAR Billing Code	AN	5
AEM02	Site ID	AN	7
AEM03	Event Start Date	N	6
AEM04	Event Start Time	N	4
AEM05	Event Stop Time	N	4
AEM06	Time Zone	N	3
AEM07	Daylight Savings Time Indicator	A	1
AEM08	Data Format Version Number	AN	3
AEM09	Train Sequence Number	N	4
AEM10	Locomotive Conversion Status	AN	1
AEM11	Railcar Conversion Status	AN	1
AEM12	Direction of Travel	A	1
AEM13	Switch/Direction Indicator	N	1
AEM14	Units of Measure	A	1
AEM15	Maximum Speed	N	3
AEM16	Minimum Speed	N	3
AEM17	Average Speed	N	3
AEM18	Movement Status	AN	1
AEM19	Termination Status	AN	1
AEM20	Transmission Type	AN	1
AEM21	Adjacent Track Occupied	AN	1
AEM22	Train Length	N	5
AEM23	Equipment Status Code	AN	1
AEM24	Locomotive Count	N	2
AEM25	Locomotives Tagged	N	2
AEM26	Railcar Count	N	3
AEM27	Railcars Tagged	N	3
AEM29	Total Axle Count	N	4

2.1.5 Detailed Segment Description (page 1 of 3)

Ref	Size	Field
AEM00	3	Segment ID: “AEM”
AEM01	5	AAR Billing Code. Unique for each owner. First position is zero for railroads, and non-zero for non railroads. Next four positions are standard AAR 260 billing codes for railroads and unique substitutes for non-railroads.
AEM02	7	Site ID. Unique site ID for each owner.
AEM03	6	Event Start Date (YYMMDD)
AEM04	4	Event Start Time (HHMM) (local time)
AEM05	4	Event Stop Time (HHMM)
AEM06	3	Time Zone, hours offset from GMT (##.#, decimal assumed) 5 =Eastern 6 = Central 7 = Mountain 8 = Pacific
AEM07	1	Daylight Savings Time Indicator (Y/N) Y=Daylight savings time is in effect.
AEM08	3	Data Format Version Number (#.## with . assumed) First digit = Major change (May not be backwards compatible.) Second digit = Major enhancement (Is backwards compatible.) Third digit = Processing upgrade.
AEM09	4	Train Sequence Number. A unique number that is incremented after each train is recorded. Range: 1–9999. Number wraps back to 1 after sequence 9999. Zero is an invalid train sequence number.
AEM10	1	Locomotive Conversion Status, Consist Confidence Level G= Good (No significant problems) A = At least one questionable axle pattern was found D = Excessive disqualifiers (inconsistencies between tag and axle pattern) M= Multiple inconsistencies (both “A” and “D”) ? = Other
AEM11	1	Railcar Conversion Status, Consist Confidence Level G= Good (No significant problems) A = At least one questionable axle pattern was found D = Excessive disqualifiers (inconsistencies between tag and axle pattern) M= Multiple inconsistencies (both “A” and “D”) ?= Other
AEM12	1	Direction of Travel Valid Values: N, S, E, W
AEM13	1	Switch/Direction Indicator. (0–9) Owner-defined. Indicates the current position of local track switches (as reported by external switch point controllers or similar devices). This allows the host to identify the route the train is traveling (when more than one route exists).
AEM14	1	Units of Measure. English or metric units (E/M) for the entire report.
AEM15	3	Maximum Speed (mph or kph)
AEM16	3	Minimum Speed (mph or kph)
AEM17	3	Average Speed (mph or kph)

2.1.5 Detailed Segment Description (page 2 of 3)

Ref	Size	Field
AEM18	1	Movement Status. Type of train movement. A = Through movement, over 5 mph B = Through movement, under 5 mph C = Through movement, stop and go D = Through movement, switching (direction changes detected) E = Simulation (software generated train) F = Reverse exit (pull by) R = Arrival Listing ? = Other
AEM19	1	Termination Status. Indicates completion state of the train. N = Normal T = Time-out (Train did not move for a specified period of time.) Partial train will be reported. When train resumes movement, the train will be reported again with the new cars appended (same sequence and start time/date as original train). See “appended” transmission type below. O = Presence was forcibly cleared due to a failed presence circuit. P = Processing Limitation ? = Other
AEM20	1	Transmission Type R = Retransmission S = Summary F = First transmission A = Appended. Reported train replaces previous train fragment. Previous train was terminated by time-out. (See “Termination Status” above.) ? = Other
AEM21	1	Adjacent Track Occupied (Y/N) Y = Train was reported on adjacent track during the train. N = No activity on adjacent track.
AEM22	5	Train Length. Total distance from end to end (in feet or decimeters).

2.1.5 Detailed Segment Description (page 3 of 3)

Ref	Size	Field
AEM23	1	Equipment Status Code. Reflects any abnormal site activity that occurred during or prior to the reported train. Details of reported event can be found in the maintenance report. A = Antenna warning. System is reading an unexpectedly low number of tags on at least one antenna. B = Antenna fatal. At least one antenna is no longer reading tags. C = Communication error with external components. E = Intertrack communication warning. Problem was detected, but recovered. F = Intertrack communication fatal. Cannot communicate with external processor. G= Good. No problems detected. H = Power supply warning. Battery charger temporarily lost power. I = Power supply fatal. Battery charger lost power. K = Software setup failure. Software has detected an inaccurately set parameter. M= Multiple (More than one problem). P = Presence circuit warning. Problem was detected, but recovered. Q= Presence circuit fatal. Presence circuit is no longer functional. R = Reader/RF warning. Problem was detected, but recovered. S = Reader/RF fatal. At least one reader is no longer functional. T = Wheel transducer warning. Problem was detected, but recovered. U = Wheel transducer fatal. Transducer is no longer functional. V = No wheel transducer input. W= External detector trigger. IO device (such as a hut door switch or thermocouple) went active. X = External processor communications warning. Problem was detected with external processor (such as a scale or defect detector), but recovered. Y = External processor communications fatal. (External processor unit is no longer functional.) Z = Security. Excessive number of failed user logon attempts. ? = Other
AEM24	2	Locomotive Count. Total number of locomotives (tagged or not tagged).
AEM25	2	Locomotives Tagged. Total number of locomotives with valid tags.
AEM26	3	Railcar Count. Total number of railcars (tagged or not tagged).
AEM27	3	Railcars Tagged. Total number of railcars with valid tags.
AEM29	4	Total Axle Count.

2.1.6 Examples

Format Options: Fixed width fields, space delimiter.

```
AEM 00721 0000069 950329 0808 0810 080 N 400 0041 G G E 0 E 045 041 043 A N F N 03391 G 03 03 041 041 0190
AEM 00721 0000048 950329 1021 1022 000 N 400 0051 G G E 0 E 023 022 022 A N F N 01301 G 03 03 025 025 0118
AEM 00721 0000029 950330 2331 2339 060 N 400 0081 G A W 0 E 010 003 007 C N F N 06930 B 02 02 017 014 0178
AEM 00721 0000029 950331 1154 1159 060 N 400 0101 G G E 0 E 020 008 017 A N F N 05175 B 04 03 085 082 0358
AEM 00721 0000086 950331 2040 2042 080 N 400 0071 G G E 0 E 046 041 042 A N F N 03891 G 07 07 088 080 0380
AEM 00721 0000069 950331 2107 2111 080 N 400 0101 G G E 0 E 023 017 020 A N F N 05199 G 07 07 078 078 0354
AEM 00721 0000069 950330 0803 0805 080 N 400 0061 G D E 0 E 043 031 039 A N F N 05782 G 07 07 093 091 0410
AEM 00721 0000003 950328 0316 0318 060 N 400 0011 G D E 0 E 054 048 050 A N F N 06931 G 03 03 026 026 0294
AEM 00721 0000034 950331 1704 1707 070 N 400 0151 G G W 0 E 033 024 026 A N F N 05676 G 05 05 022 022 0264
AEM 00721 0000084 950328 0731 0732 080 N 400 0031 G G E 0 E 047 046 046 A N F N 02342 G 03 03 042 041 0184
AEM 00721 0000034 950328 1743 1746 070 N 400 0031 G G E 0 E 050 032 040 A N F N 08083 G 04 04 067 065 0350
AEM 00721 0000029 950330 0220 0228 060 N 400 0051 G G E 0 E 013 005 011 A N F N 06757 G 06 05 098 095 0420
```

2.2 RRE—Rail Equipment

2.2.1 Description

This segment is used to identify tagged and untagged locomotives and railcars. It provides information about where the vehicle is in the train, which direction it is facing, and its ID (if tagged). It also reports any inaccuracies that are seen when processing the car. Optionally, if inaccuracies are seen, the RRE segment will be followed by a segment that details what the problems are. (See paragraph 2.20, "THI—Tag Health Information.")

At least one RRE will be sent for each rail vehicle on the train. A second RRE will be sent in situations where two tags are found on the vehicle, but the ID is different between them (called a ID mismatch). The RRE segment is always the first segment reported for each vehicle.

2.2.2 Other References

AAR *Manual of Standards and Recommended Practices*, Standard S-918, Appendices A and B.

2.2.3 Implementation Status

Complete.

2.2.4 Segment Summary

Ref	Field	Type	Size
RRE00	Segment ID	AN	3
RRE01	Sequence Number	N	3
RRE02	Equipment Group Code	A	1
RRE03	Owner Code	A	4
RRE04	Owner Equipment Number	N	10
RRE05	Orientation	A	1
RRE06	Reserved	AN	1
RRE07	Axle Conversion Code	A	1
RRE08	Tag Status	A	1
RRE09	Tag Detail Status	A	1
RRE10	Hand Shakes Antenna 0	N	2
RRE11	Hand Shakes Antenna 1	N	2
RRE12	Speed of Vehicle	N	3
RRE13	Axle Count	N	3
RRE14	Platform Count	N	3

2.2.5 Detailed Segment Description

Ref	Size	Field
RRE00	3	Segment ID: “RRE”
RRE01	3	Sequence Number. Standing order of the vehicle in the train. (1 = first)
RRE02	1	Equipment Group Code. Indicates the vehicle type. Based on axles if not tagged. D = Locomotive R = Railcar (and former Non-Revenue Rail) ? = Unknown
RRE03	4	Owner Code. Standard Carrier Alpha Code as read from the tag. Blank if not tagged.
RRE04	10	Owner Equipment Number, as read from the tag. Zero if not tagged.
RRE05	1	Orientation. Indicates which end of the car is facing forward. A = “A” end of a railcar or “F” end of a locomotive B = “B” end of a railcar (also called the “Brake” end) or “R” end of a locomotive U = “U” unknown or not determined
RRE06	1	Reserved for future use.
RRE07	1	Axle Conversion Code. Indicates if there were any problems processing the axle pattern of the vehicle to determine sequence number. G = Good. No problem determining vehicles from axle input. B = Bad. Axle information may have caused an extra vehicle. S = Sequence Logically Correct. Software cannot determine vehicle type.
RRE08	1	Tag Status. Indicates possible problems with tag placement on the vehicle. G = Good. Both tags (right and left) were read. M = Mismatched Identification (Owner code and equipment number only.) A second RRE containing the other tag will be sent. L = Left tag missing R = Right tag missing N = No tag read ? = Other
RRE09	1	Tag Detail Status. Indicates any other tag-related problems (such as tag programming, etc.). K = OK A = Axle error. Number of axles in tag differs from axle pattern. E = Equipment Group Code error. EGC in tag differs from axle pattern. L = Length error. Length in tag differs from axle pattern (15%). O = Orientation errors. Tag applied on wrong side or wrong end of equipment. P = Platform code error. A multi-pack car had a bad platform code or a non-multi-pack car has a platform code. I = Individual platform tags, multi-packs incorrectly tagged. D = Unused tag read on equipment. H = Performance. Handshakes less than that predicted by AMTECH speed and range guidelines. W = Window violation. Tags applied outside the AAR window for acceptable application. M = Multiple errors ? = Other
RRE10	2	Hand Shakes Antenna 0 (99 = 99 or more)
RRE11	2	Hand Shakes Antenna 1 (99 = 99 or more)
RRE12	3	Speed of Vehicle (mph or kph)
RRE13	3	Axle Count
RRE14	3	Platform Count. Total number of platforms for vehicle. Platform count for non-articulated cars is always 1.

2.2.6 Examples

Format Options: Fixed width fields, space delimiter.

```
RRE 001 D SSW  0000008085 A G GK 07 05 034 006 001
RRE 002 D SP   0000008002 B G GK 06 06 034 004 001
RRE 003 R DTTX 0000072504 B G GP 06 06 034 004 001
RRE 004 R DTTX 0000720134 A G GK 05 06 034 004 001
RRE 005 R DTTX 0000064064 B G MK 00 06 033 004 001
RRE 005 R DTTX 0000064042 B G MK 07 00 033 004 001
RRE 006 R DTTX 0000062313 B G GP 06 07 033 004 001
RRE 007 R DTTX 0000062717 A G GK 06 07 033 004 001
RRE 008 R APLX 0000004824 A G GK 07 07 032 004 001
RRE 009 R SFLC 0000254119 B G GK 07 08 032 004 001
RRE 010 R DTTX 0000054511 B G LK 08 00 032 004 001
RRE 011 R APLX 0000004571 A G GP 00 00 031 004 001
```

2.3 CEQ—Conveyed Equipment

2.3.1 Description

The CEQ segment is used to report all tagged conveyed equipment carried upon standard or articulated railcars. These include trailers, containers, and chassis. In addition to the ID of the conveyed equipment, the segment reports which platform, tier, and position the cargo was located on. One CEQ segment will be reported for each trailer, container, or chassis tag read.

2.3.2 Other References

AAR *Manual of Standards and Recommended Practices*, Standard S-918, Appendices C, D, and F.

2.3.3 Implementation Status

Tag Detail Status is always “K.” All other fields complete.

2.3.4 Segment Summary

Ref	Field	Type	Size
CEQ00	Segment ID	AN	3
CEQ01	Sequence Number	N	3
CEQ02	Equipment Group Code	A	1
CEQ03	Owner Code	A	4
CEQ04	Owner Equipment Number	N	10
CEQ05	Length	N	3
CEQ06	Tag Detail Status	A	1
CEQ07	Hand Shakes Antenna 0	N	2
CEQ08	Hand Shakes Antenna 1	N	2
CEQ09	Orientation	A	1
CEQ10	Platform Code	A	1
CEQ11	Tier	A	1
CEQ12	Horizontal Quadrant	N	1
CEQ13	Tag Status	A	1

2.3.5 Detailed Segment Description

Ref	Size	Field
CEQ00	3	Segment ID: “CEQ“
CEQ01	3	Sequence Number. Standing order of the vehicle carrying the conveyed equipment in the train. (1 = first)
CEQ02	1	Equipment Group Code as read from the tag. I = Container T = Trailer Z = Chassis
CEQ03	4	Owner Code, Standard Carrier Alpha Code as read from the tag
CEQ04	10	Owner Equipment Number, as read from the tag
CEQ05	3	Length. Length of equipment as read from the tag (feet or decimeters)
CEQ06	1	Tag Detail Status H = Performance. Low handshakes K = OK L = Length error. Impossible length detected. Conveyed equipment exceeds the length of the platform. O = Orientation errors. Tags on wrong sides. W = Window violation. Tags in wrong location. ? = Other
CEQ07	2	Hand Shakes Antenna 0 (99 = 99 or more)
CEQ08	2	Hand Shakes Antenna 1 (99 = 99 or more)
CEQ09	1	Orientation A = Door faces the “A” end of the car. B = Door faces the “B” end of the car. U = Orientation is unknown.
CEQ10	1	Platform Code 0 = Non-articulated car A,B,C,D... = Platform ID
CEQ11	1	Tier T = Top B = Bottom U = Unknown
CEQ12	1	Horizontal Quadrant (1–4). Indicates location of equipment on vehicle within 1 of 4 zones defined along the length of the car. Assume untagged car is operating “A“ end first. Quadrants 1 through 4 are assigned starting from the “B“ end.
CEQ13	1	Tag Status. Indicates possible problems with tag placement on the vehicle. G = Good. Both tags (right and left) were read. M = Mismatched Identification (Owner code and equipment number only.) A second RRE containing the other tag will be sent. L = Left tag missing R = Right tag missing N = No tag read ? = Other

2.3.6 Examples

Format Options: Fixed width fields, space delimiter.

```
CEQ 004 I GCEU 0000484271 479 K 00 08 B B B 1 L
CEQ 004 I APLU 0000489220 479 K 00 10 B C T 1 L
CEQ 004 I APLU 0000380152 479 K 00 08 B C B 1 L
CEQ 004 I APLU 0000458171 450 K 00 09 B D B 1 L
CEQ 004 I APLU 0000489649 479 K 00 08 B E B 1 L
CEQ 004 I APLU 0000489115 479 K 00 08 B A B 1 L
CEQ 005 I APLS 0000286959 198 K 08 00 B B B 1 R
CEQ 005 I CHAU 0000580157 479 K 02 00 B B T 1 R
CEQ 005 I APLU 0000490172 479 K 10 00 B C B 1 R
CEQ 005 I APLU 0000490198 479 K 00 11 B C T 1 L
```

2.4 EOT—End Of Train Device

2.4.1 Description

The EOT segment is used to report end-of-train devices carried on rail vehicles. Typically, EOTs are seen as the last tag reported in a consist. They can, however, be reported on any vehicle of the train (such as “dead headed” on engines). One EOT segment will be reported for each EOT tag read.

2.4.2 Other References

AAR *Manual of Standards and Recommended Practices*, Standard S-918, Appendix E.

2.4.3 Implementation Status

Tag Detail Status is always “K.” All other fields complete.

2.4.4 Segment Summary

Ref	Field	Type	Size
EOT00	Segment ID	AN	3
EOT01	Sequence Number	N	3
EOT02	Equipment Group Code	A	1
EOT03	Owner Code	A	4
EOT04	Owner Equipment Number	N	10
EOT05	Hand Shakes Antenna 0	N	2
EOT06	Hand Shakes Antenna 1	N	2
EOT07	Tag Detail Status	A	1

2.4.5 Detailed Segment Description

Ref	Size	Field
EOT00	3	Segment ID: “EOT“
EOT01	3	Sequence Number. Standing order of the vehicle carrying the EOT in the train. (1 = first)
EOT02	1	Equipment Group Code as read from the tag
EOT03	4	Owner Code, Standard Carrier Alpha Code as read from the tag
EOT04	10	Owner Equipment Number, as read from the tag
EOT05	2	Hand Shakes Antenna 0 (99 = 99 or more)
EOT06	2	Hand Shakes Antenna 1 (99 = 99 or more)

Ref	Size	Field
EOT07	1	Tag Detail Status H= Performance. Low handshakes. K= OK W= Window violation. Tags in wrong location. ? = Other

2.4.6 Examples

Format Options: Fixed width fields, space delimiter.

```
EOT 061 E GTWQ 0000092475 00 17 K
EOT 070 E SPQ  0000091292 12 00 K
```

2.5 EOC—End of Consist

2.5.1 Description

The EOC serves as the terminating segment of the train consist. This is a mandatory segment. The EOC will always be the last segment of the consist report.

2.5.2 Other References

None.

2.5.3 Implementation Status

Complete.

2.5.4 Segment Summary

Ref	Field	Type	Size
EOC00	Segment ID	AN	3
EOC01	Total Byte Count	N	10

2.5.5 Detailed Segment Description

Ref	Size	Field
EOC00	3	Segment ID: “EOC“
EOC01	10	Total Byte Count. The last segment of the consist report. Count is from the consist header up to but not including this segment.

2.5.6 Examples

Format Options: Fixed width fields, space delimiter.

```
EOC 0000000348
```

2.6 DYL—Dynamic Locomotive

2.6.1 Description

The DYL segment is used to report dynamic locomotive tags found on the train. Electronically gathered locomotive data such as fuel, kilowatt hours, and various other status indicators are reported. One DYL segment is reported for each dynamic locomotive tag read.

2.6.2 Other References

AAR *Manual of Standards and Recommended Practices*, Standard S-918, Appendix H.

2.6.3 Implementation Status

Tag Detail Status is always “K.” All other fields complete.

2.6.4 Segment Summary

Ref	Field	Type	Size
DYL00	Segment ID	AN	3
DYL01	Sequence Number	N	3
DYL02	Equipment Group Code	A	1
DYL03	Owner Code	A	4
DYL04	Owner Equipment Number	N	10
DYL05	Tag Detail Status	A	1
DYL06	Hand Shakes Antenna 0	N	2
DYL07	Hand Shakes Antenna 1	N	2
DYL08	Alarm Codes	N	2
DYL09	Volume of Fuel Tank	N	3
DYL10	Cumulative kW hours	N	5
DYL11	Engine Temp Switch Trip	AN	2
DYL12	Rated Horsepower Attainable?	A	1
DYL13	Traction Motor Cutout?	A	1
DYL14	Dynamic Brakes Cutout?	A	1
DYL15	Dynamic Brake Operational?	A	1
DYL16	Engine Running?	A	1
DYL17	Locomotive Isolated?	A	1
DYL18	Cooling Water Low?	A	1
DYL19	Communication Indicator	N	1
DYL20	Third Tag Indicator	A	1

2.6.5 Detailed Segment Description (page 1 of 2)

Ref	Size	Field
DYL00	3	Segment ID: “DYL“
DYL01	3	Sequence Number. Standing order of the vehicle in the train. (1 = first)
DYL02	1	Equipment Group Code as read from the tag
DYL03	4	Owner Code, Standard Carrier Alpha Code as read from the tag
DYL04	10	Owner Equipment Number, as read from the tag
DYL05	1	Tag Detail Status E = Equipment Group Code error. EGC in tag differs from axle pattern. H = Performance. Low handshakes. K = OK M= Multiple errors O= Orientation errors. Tags on wrong sides. W= Window violation. Tags in wrong location. ? = Other
DYL06	2	Hand Shakes Antenna 0 (99 = 99 or more)
DYL07	2	Hand Shakes Antenna 1 (99 = 99 or more)
DYL08	2	Alarm Codes (Bits 68–71) 0 = No alarms 1 = Traction motor overspeed 2 = Brake pressure at last car less than 45 psi 3 = Brake pressure in main reservoir less than brake pipe pressure or (emergency reservoir pressure + 15 psi) 4 = PCS open 5 = Wheel slip 6 = Dynamic brake warning 7 = Penalty brake 8 = Ground relay 9 = High horsepower setting 10–14 = Reserved 15= Multiple alarms
DYL09	3	Volume of Fuel in Tank (100-gal OR 100-L units)
DYL10	5	Cumulative KW Hrs (100-hp hour OR 100-kW hour units)

DYL11	2	Engine Temp Switch Trip
		0–14 = # Times temperature switch was tripped
		X = Cannot detect

DYL12	1	Rated Horsepower Attainable? Y = Yes N = No X = Cannot detect
DYL13	1	Traction Motor Cutout? Y = Yes N = No X = Cannot detect
DYL14	1	Dynamic Brakes Cutout? Y = Yes N = No X = Cannot detect

2.6.5 Detailed Segment Description (page 2 of 2)

Ref	Size	Field
DYL15	1	Dynamic Brake Operational? Y = Yes N = No X = Cannot detect
DYL16	1	Engine Running? Y = Yes N = No X = Cannot detect
DYL17	1	Locomotive Isolated? Y = Yes N = No X = Cannot detect
DYL18	1	Cooling Water Low? Y = Yes N = No X = Cannot detect
DYL19	1	Communication Indicator 0 = Communications fault 1 = Communication OK
DYL20	1	Third Tag Indicator Y = Tag was applied in addition to the standard railcar tags. N = Tag replaced one of the standard railcar tags.

2.6.6 Examples

Format Options: Fixed width fields, space delimiter.

```
DYL 001 D SP 0000008579 K 02 00 00 013 08192 X X X X X X X X 1 Y
DYL 002 D SP 0000008580 K 07 00 00 015 00000 X X X X X X X X 1 Y
```

2.7 DYI—Dynamic Impact Recorder

2.7.1 Description

This segment contains information gathered from dynamic impact tags about excessive impacts experienced by the carrying equipment (such as railcars, containers, and trailers). Reported elements include the size of the impact (in Gs and DV), when the impact occurred, the type of impact, and how many impacts were recorded. One DYI segment is reported for each impact tag read. As designed, this is for a single-frame tag only.

2.7.2 Other References

AAR *Manual of Standards and Recommended Practices*, Standard S-918, Appendix K.

2.7.3 Implementation Status

Segment assigned for future development.

Siemens EX1030
Page 125 of 177

2.7.4 Segment Summary

Ref	Field	Type	Size
DYI00	Segment ID	AN	3
DYI01	Sequence Number	N	3
DYI02	Equipment Group Code	A	1
DYI03	Owner Code	A	4
DYI04	Owner Equipment Number	N	10
DYI05	Tag Detail Status	A	1
DYI06	Hand Shakes Antenna 0	N	2
DYI07	Hand Shakes Antenna 1	N	2
DYI08	Impact Recorder Low Battery Indicator	N	1
DYI09	Analog Port	N	1
DYI10	Analog Measurement	N	3
DYI11	Date of Longitudinal Impact	N	6
DYI12	Time of Longitudinal Impact	N	4
DYI13	Longitudinal Impact Counter	N	2
DYI14	Communication Indicator	N	1
DYI15	Tag Low Battery Indicator	N	1
DYI16	Third Tag Indicator	A	1
DYI17	Longitudinal Impact G Force Measurement	N	3
DYI18	Longitudinal Impact DV Measurement	N	3
DYI19	Vertical Impact Alarm	N	1
DYI20	Lateral Impact Alarm	N	1
DYI21	Digital Input Alarm 1	N	1
DYI22	Digital Input Alarm 2	N	1
DYI23	Digital Input Alarm 3	N	1
DYI24	Digital Input Alarm 4	N	1
DYI25	Temperature Alarm	N	1

2.7.5 Detailed Segment Description (page 1 of 2)

Ref	Size	Field
DYI00	3	Segment ID: “DYI“
DYI01	3	Sequence Number. Standing order of the vehicle in the train. (1 = first)
DYI02	1	Equipment Group Code as read from the tag. (See Appendix A, paragraph 1.0 for codes.)
DYI03	4	Owner Code. Standard Carrier Alpha Code as read from the tag.
DYI04	10	Owner Equipment Number as read from the tag
DYI05	1	Tag Detail Status E = Equipment Group Code error H = Performance. Low handshakes. K = OK M= Multiple errors O= Orientation errors. Tags on wrong sides. W= Window violation. Tags in wrong location. ? = Other
DYI06	2	Hand Shakes Antenna 0 (99 = 99 or more)
DYI07	2	Hand Shakes Antenna 1 (99 = 99 or more)
DYI08	1	Impact Recorder Low Battery Indicator 0 = No alarm 1 = Low Battery Condition
DYI09	1	Analog Port 0 = No alarm condition present 1 = Analog port #1 2 = Analog port #2 3 = Analog port #3 4 = Analog port #4 5 = Analog port #5(Temperature Sensor) 6 = Reserved 7 = Reserved
DYI10	3	Analog Measurement 0 Through 255; Port, sensor and user dependent
DYI11	6	Date of Longitudinal Measurement (YYMMDD)
DYI12	4	Time of Longitudinal Measurement (HHMM)
DYI13	2	Longitudinal Impact Counter
DYI14	1	Communication Indicator 0 = Communications fault 1 = Communication OK
DYI15	1	Tag Low Battery Indicator 0 = Low Battery Condition 1 = No alarm/tag does not use battery
DYI16	1	Third Tag Indicator Y = Tag was applied in addition to the standard railcar tags. N = Tag replaced one of the standard railcar tags.
DYI17	3	Longitudinal Impact G Force Measurement (tenths of a G)
DYI18	3	Longitudinal Impact DV Measurement (tenths of an mph)

2.7.5 Detailed Segment Description (page 2 of 2)

Ref	Size	Field
DYI19	1	Vertical Impact Alarm 0 = No alarm 1 = Vertical/Lateral impact exceeded threshold 1 2 = Vertical/Lateral impact exceeded threshold 2 3 = Vertical/Lateral impact exceeded threshold 3
DYI20	1	Lateral Impact Alarm 0 = No alarm 1 = Vertical/Lateral impact exceeded Threshold 1 2 = Vertical/Lateral impact exceeded Threshold 2 3 = Vertical/Lateral impact exceeded Threshold 3
DYI21	1	Digital Input Alarm 10= No alarm 1 = Digital Input Alarm 1 detected
DYI22	1	Digital Input Alarm 20= No alarm 1 = Digital Input Alarm 2 detected
DYI23	1	Digital Input Alarm 30= No alarm 1 = Digital Input Alarm 3 detected
DYI24	1	Digital Input Alarm 40= No alarm 1 = Digital Input Alarm 4 detected
DYI25	1	Temperature Alarm 0 = No alarm 1 = Temperature exceeded threshold

2.7.6 Examples

Format Options: Fixed width fields, space delimiter.

```
DYI 030 R ATSF 0000089025 K 00 12 0 2 010 950401 0732 08 1 0 N 010 040 1 2 0 0 0 0 0
DYI 067 R ATSF 0000700371 K 00 11 0 1 008 950403 1744 01 1 1 N 020 080 2 3 0 0 0 0 1
```

2.8 DYR—Dynamic Refrigerator

2.8.1 Description

This segment contains information reported by dynamic refrigerator tags found on refrigerator units. These units can be attached to railcars, containers, and trailers. Information such as fuel and temperature levels and status indicators are reported. One DYR segment is reported for each dynamic refrigerator tag read.

2.8.2 Other References

AAR *Manual of Standards and Recommended Practices*, Standard S-918, Appendix G.

2.8.3 Implementation Status

Segment assigned for future development.

2.8.4 Segment Summary

Ref	Field	Type	Size
DYR00	Segment ID	AN	3
DYR01	Sequence Number	N	3
DYR02	Equipment Group Code	A	1
DYR03	Owner Code	A	4
DYR04	Owner Equipment Number	N	10
DYR05	Tag Detail Status	A	1
DYR06	Hand Shakes Antenna 0	N	2
DYR07	Hand Shakes Antenna 1	N	2
DYR08	Alarm Flags Reported	A	1
DYR09	Major Alarm Flag	A	1
DYR10	Microprocessor Fault Flag	A	1
DYR11	Sensor Fault Flag	A	1
DYR12	High Discharge Pressure Flag	A	1
DYR13	Electrical Cntrl Sys. Shutdown Flag	A	1
DYR14	Low Refrigerant Cap. Shutdown Flag	A	1
DYR15	Low Engine Oil Pressure Shutdown Flag	A	1
DYR16	High Engine Water Temperature Flag	A	1
DYR17	Out of Range Product Temperature Flag	A	1
DYR18	Refrigeration Unit Operating Mode	A	1
DYR19	Recent Defrost Flag	A	1
DYR20	Volume of Fuel in Tank	A	1
DYR21	Return Air Temp.	N	5
DYR22	All Door Seals Are Intact	A	1
DYR23	Communication Status Indicator	N	1

2.8.5 Detailed Segment Description (page 1 of 3)

Ref	Size	Field
DYR00	3	Segment ID: “DYR“
DYR01	3	Sequence Number. Standing order of the vehicle in the train. (1 = first)
DYR02	1	Equipment Group Code (See Appendix A, paragraph 1.0 for codes.)
DYR03	4	Owner Code (Standard Carrier Alpha Code)
DYR04	10	Owner Equipment Number (sent with leading zeros)
DYR05	1	Tag Detail Status E = Equipment group code error H = Performance K = OK M= Miscellaneous/multiple errors O= Orientation error W= Window violation ? = Other.
DYR06	2	Hand Shakes Antenna 0 (99 = 99 or more)
DYR07	2	Hand Shakes Antenna 1 (99 = 99 or more)

2.8.5 Detailed Segment Description (page 2 of 3)

Ref	Size	Field
DYR08	1	Alarm Flags Reported Y = Yes N = No X = Cannot detect
DYR09	1	Major Alarm Flag Y = Yes N = No
DYR10	1	Microprocessor Fault Flag Y = Yes N = No X = Cannot detect
DYR11	1	Sensor Fault Flag Y = Yes N = No X = Cannot detect
DYR12	1	High Discharge Pressure Flag Y = Yes N = No X = Cannot detect
DYR13	1	Electrical Control System Shutdown Flag Y = Yes N = No X = Cannot detect
DYR14	1	Low Refrigerant Capacity Shutdown Flag Y = Yes N = No X = Cannot detect
DYR15	1	Low Engine Oil Pressure Shutdown Flag Y = Yes N = No X = Cannot detect
DYR16	1	High Engine Water Temperature Flag Y = Yes N = No X = Cannot detect
DYR17	1	Out of Range Product Temperature Flag Y = Yes N = No X = Cannot detect
DYR18	1	Refrigeration Unit Operating Mode X = Cannot detect 1 = Low capacity cool 2 = High capacity cool 3 = Heat 4 = Null (satisfied) 5 = Defrost 6 = Power off 7 = Alarm shutdown

2.8.5 Detailed Segment Description (page 3 of 3)

Ref	Size	Field
DYR19	1	Recent Defrost Flag Y = Yes N = No X = Cannot detect
DYR20	1	Volume of Fuel in tank (0–8 / x) in 1/8 units
DYR21	5	Return Air Temperature/product temperature for cryogenic (Range is –30 °C to +32.5 °C in 1/4 °C increments.)
DYR22	1	All Door Seals Are Intact Y = Yes N = No X = Cannot detect
DYR23	1	Communication Status Indicator 0 = Communication fault 1 = OK

2.9 ALM—Alarm Tag

2.9.1 Description

This segment contains information about various alarms occurring on the equipment carrying alarm tags. These tags are not active until the alarming condition occurs. Alarming conditions currently include cushioning device failures and open doors. One ALM segment is sent for each alarm tag read.

2.9.2 Other References

AAR *Manual of Standards and Recommended Practices*, Standard S-918, Appendix J.

2.9.3 Implementation Status

Segment assigned for future development.

2.9.4 Segment Summary

Ref	Field	Type	Size
ALM00	Segment ID	AN	3
ALM01	Sequence Number	N	3
ALM02	Equipment Group Code	A	1
ALM03	Owner Code	A	4
ALM04	Equipment Number	AN	10
ALM05	Tag Detail Status	A	1
ALM06	Third Tag	A	1
ALM07	Alarm Code	N	4

2.9.5 Detailed Segment Description

Ref	Size	Field
ALM00	3	Segment ID: “ALM“
ALM01	3	Sequence Number. Standing order of the vehicle in the train. (1 = first)
ALM02	1	Equipment Group Code (See Appendix A, paragraph 1.0 for codes.)
ALM03	4	Owner Code (Standard carrier alpha code)
ALM04	10	Equipment Number (sent with leading zeros)
ALM05	1	Tag Detail Status K = OK E = Equipment group code error H = Performance O = Orientation error W = Window violation ? = Unknown problem with tag
ALM06	1	Third Tag (Y/N)
ALM07	4	Alarm Code 0 = No Alarm 1 = Draft Gear Cushioning Unit Low Pressure—“A” End 2 = Draft Gear Cushioning Unit Low Pressure—“B” End 3 = Door Open 4 = Draft Gear Cushioning Unit Defective—“A” End 5 = Draft Gear Cushioning Unit Defective—“B” End 6–4095 = Reserved

2.10 GEN—Generator Set

2.10.1 Description

This segment contains information electronically gathered from electricity generators carried by railcars, containers, and trailers. Information reported includes energy consumption (fuel and kilowatt hours), generator voltage, how the equipment is mounted, as well other diagnostic indicators. One GEN segment is reported for each generator set tag read.

2.10.2 Other References

AAR *Manual of Standards and Recommended Practices*, Standard S-918, Appendix L.

2.10.3 Implementation Status

Segment assigned for future development.

2.10.4 Segment Summary

Ref	Field	Type	Size
GEN00	Segment ID	AN	3
GEN01	Sequence Number	N	3
GEN02	Equipment Group Code	A	1
GEN03	Owner Code	A	4
GEN04	Owner Equipment Number	AN	10
GEN05	Tag Detail Status	A	1
GEN06	Hand Shakes Antenna 0	N	2
GEN07	Hand Shakes Antenna 1	N	2
GEN08	Mounting Code	N	1
GEN09	Tare Weight	N	5
GEN10	Fuel Capacity	N	2
GEN11	Voltage	N	1

2.10.5 Detailed Segment Description (page 1 of 2)

Ref	Size	Field
GEN00	3	Segment ID—“GEN“
GEN01	3	Sequence Number. Standing order of the vehicle in the train. (1 = first)
GEN02	1	Equipment Group Code (See Appendix A, paragraph 1.0 for codes.)
GEN03	4	Owner Code (Standard carrier alpha code)
GEN04	10	Owner Equipment Number
GEN05	1	Tag Detail Status E = Equipment group code error H = Performance K = OK M= Miscellaneous / multiple errors O= Orientation error W= Window violation ? = Other
GEN06	2	Hand Shakes Antenna 0 (99 = 99 or more)
GEN07	2	Hand Shakes Antenna 1 (99 = 99 or more)
GEN08	1	Mounting Code 0 = Not Used / Other 1 = Underslung 2 = “Clip On” (Nose Mount) 3 = Nitrogen Clip 4–7 = Reserved for Future Use
GEN09	5	Tare Weight (Pounds or Kilograms)

2.10.5 Detailed Segment Description (page 2 of 2)

Ref	Size	Field
GEN10	2	Fuel Capacity 0 = Not Used 1 = 150 liters or less 2 = 151–190 liters 3 = 191–230 liters 4 = 231–270 liters 5 = 271–310 liters 6 = 311–350 liters 7 = 351–390 liters 8 = 391–430 liters 9 = 431–470 liters 10= 471–510 liters 11= 511–550 liters1 2 = 551–590 liters 13= 591–630 liters 14= 631–670 liters 15= More than 670 liters
GEN11	2	Voltage 0 = Not used / Other 1 = 230 volts 2 = 460 volts 3–7=Reserved

2.11 HAT—Railcar Cover

2.11.1 Description

This segment contains information about covers that are used on railcars. Information such as cover type, length, and how the cover is fastened to the railcar is reported. There can be multiple covers on each railcar. One HAT segment is reported for each railcar cover tag read.

2.11.2 Other References

AAR *Manual of Standards and Recommended Practices*, Standard S-918, Appendix I.

2.11.3 Implementation Status

Completed

2.11.4 Segment Summary

Ref	Field	Type	Size
HAT00	Segment ID	AN	3
HAT01	Sequence Number	N	3
HAT02	Owner Code	A	4
HAT03	Owner Equipment Number	N	10
HAT04	Length	N	3
HAT05	Tag Status	A	1
HAT06	Tag Detail Status	A	1
HAT07	Handshakes Antenna 0	N	2
HAT08	Handshakes Antenna 1	N	2
HAT09	Cover Type	N	2
HAT10	Date Built or Rebuild	N	3
HAT11	Insulated?	A	1
HAT12	Fitting Code/Lifting Bracket	N	1
HAT13	Owner Code of Associated Railcar	A	4
HAT14	Equipment # of Associated Railcar	N	10

2.11.5 Detailed Segment Description (page 1 of 2)

Ref	Size	Field
HAT00	3	Segment ID: “HAT“
HAT01	3	Sequence Number. Standing order of the vehicle in the train. (1 = first)
HAT02	4	Owner Code. Standard Carrier Alpha Code as read from the tag. Blank if not tagged.
HAT03	10	Owner Equipment Number as read from the tag. Zero if not tagged.
HAT04	3	Length (feet or decimeters)
HAT05	1	Tag Status. Indicates possible problems with tag placement on the vehicle. G= Good. Both tags (right and left) were read. M= Mismatched Identification (Owner code and equipment number only.) A second RRE containing the other tag will be sent. L = Left tag missing R= Right tag missing N= No tag read ? = Other
HAT06	1	Tag Detail Status. Indicates any other tag-related problems (such as tag programming, etc.) K= OK A= Axle error. Number of axles in tag differs from axle pattern. E= Equipment Group Code error. EGC in tag differs from axle pattern. L = Length error. Length in tag differs from axle pattern (15%). O= Orientation errors. Tag applied on wrong side or wrong end of equipment. P= Platform code error. A multi-pack car had a bad platform code or a non-multi-pack car has a platform code. I = Individual platform tags, multi-packs incorrectly tagged. D= Unused tag read on equipment. H= Performance. Handshakes less than that predicted by AMTECH speed and range guidelines. W= Window violation. Tags applied outside the AAR window for acceptable application. M= Multiple errors ? = Other

2.11.5 Detailed Segment Description (page 2 of 2)

Ref	Size	Field
HAT07	2	Handshakes Antenna 0 (99 = 99 or more)
HAT08	2	Handshakes Antenna 1 (99 = 99 or more)
HAT09	2	Cover Type 0 = 1 piece fiberglass 1 = 1 piece steel 2 = High profile steel 3 = First on—fiberglass—internal rib 4 = First off—fiberglass—internal rib 5 = First on—fiberglass—external rib 6 = First off—fiberglass—external rib 7 = First on—fiberglass—high profile 8 = First off—fiberglass—high profile 9 = First on—steel 10= First off—steel 11-14 = Reserved for future definition by AAR 15= Other
HAT10	2	Date Built or Rebuild (Optional) 0 = Not used 9 = 1979 18 = 1988 1 = 1971 or earlier 10 = 1980 19 = 1989 2 = 1972 11 = 1981 20 = 1990 3 = 1973 12 = 1982 21 = 1991 4 = 1974 13 = 1983 22 = 1992 5 = 1975 14 = 1984 23 = 1993 6 = 1976 15 = 1985 24 = 1994 7 = 1977 16 = 1986 25 = 1995 8 = 1978 17 = 1987 26 = 1996
HAT11	1	Insulated? Y = Yes N = No
HAT12	1	Fitting Code/Lifting Bracket 0 = C hooks 1 = Clamp device 2 = Electric coil grab 3 = Mechanical coil grab 4 = Multiple capability—electric, mechanical, and “C” hooks 5–6 = Reserved for future definition by AAR 7 = Other
HAT13	4	Owner Code of Associated Railcar (Optional)
HAT14	10	Owner Equipment Number Associated Railcar (Optional)

2.12 TST—Test Tag

2.12.1 Description

This segment is used to report the occurrence of a test tag on a train. Test tags are used for non-standard applications, such as development and testing. The information in the tag is defined by the application that programmed it.

2.12.2 Other References

None.

2.12.3 Implementation Status

Segment assigned for future development.

2.12.4 Segment Summary

Ref	Field	Type	Size
TST00	Segment ID	AN	3
TST01	Sequence Number	N	3
TST02	Raw Tag Data	AN	40

2.12.5 Detailed Segment Description

Ref	Size	Field
TST00	3	Segment ID: “TST“
TST01	3	Sequence Number. Standing order of the vehicle in the train. (1 = first)
TST02	40	Raw Tag Data. Unconverted information from the tag.

2.13 XAC—Acoustic Interface

2.13.1 Description

This segment contains data pertaining to wheel bearing problems, as reported by an acoustic bearing detector. The segment provides information necessary to pinpoint exactly where the defective bearing is on which car of the train. One XAC segment is reported for each bearing defect indicated by the acoustic bearing detector unit.

2.13.2 Other References

None.

2.13.3 Implementation Status

Segment assigned for future development.

Siemens EX1030
Page 137 of 177

2.13.4 Segment Summary

Ref	Field	Type	Size
XAC00	Segment ID	AN	3
XAC01	Sequence Number	N	3
XAC02	Side Indicator	A	1
XAC03	Axle Number from Front of Train	N	5
XAC04	Axle Number from Lead of Car	N	2
XAC05	Cross-Check Status	A	1
XAC06	Exception Message	A	16
XAC07	Spun Cone Status	A	1
XAC08	Spalled Bearing Status	A	1
XAC09	Brinnelled Bearing Status	A	1

2.13.5 Detailed Segment Description

Ref	Size	Field
XAC00	3	Segment ID: “XAC“
XAC01	3	Sequence Number. Standing order of the vehicle in the train. (1 = first)
XAC02	1	Side Indicator N = Near Rail F = Far Rail
XAC03	5	Axle Number from Front of Train. Target axle counting from the first axle of the train. First axle = 1.
XAC04	2	Axle Number from Lead of Car. Target axle counting from the leading axle of the car.
XAC05	1	Cross-Check Status C = Vehicle sequence mismatch. Vehicle sequence reported by detector is different from local vehicle sequence. A = Axle count mismatch. Total axle count reported for the train differs from local unit to detector.
XAC06	16	Exception Message. Text message reported by detector indicating condition flagged.
XAC07	1	Spun Cone Status A = “A” threshold defined by detector unit was met or exceeded. B = “B” threshold defined by detector unit was met or exceeded. C = “C” threshold defined by detector unit was met or exceeded. D = “D” threshold defined by detector unit was met or exceeded. E = “E” threshold defined by detector unit was met or exceeded.
XAC08	1	Spalled Bearing Status A = “A” threshold defined by detector unit was met or exceeded. B = “B” threshold defined by detector unit was met or exceeded. C = “C” threshold defined by detector unit was met or exceeded. D = “D” threshold defined by detector unit was met or exceeded. E = “E” threshold defined by detector unit was met or exceeded.
XAC09	1	Brinnelled Bearing Status A = “A” threshold defined by detector unit was met or exceeded. B = “B” threshold defined by detector unit was met or exceeded. C = “C” threshold defined by detector unit was met or exceeded. D = “D” threshold defined by detector unit was met or exceeded. E = “E” threshold defined by detector unit was met or exceeded.

2.14 XFW—Wheel Impact

2.14.1 Description

This segment contains data pertaining to wheel defects, as reported by a wheel impact load detector. The segment provides information necessary to pinpoint exactly where the wheel defect is on which car of the train. One XFW segment is reported for each wheel defect indicated by the detector unit.

2.14.2 Other References

None.

2.14.3 Implementation Status

Complete.

2.14.4 Segment Summary

Ref	Field	Type	Size
XFW00	Segment ID	AN	3
XFW01	Sequence Number	N	3
XFW02	Side Indicator	A	1
XFW03	Axle Number from Front of Train	N	5
XFW04	Axle Number from Lead of Car	N	2
XFW05	Cross-Check Status	A	1
XFW06	Exception Message	A	16
XFW07	Peak Alarm Status	A	1
XFW08	Dynamic Alarm Status	A	1
XFW09	Ratio Alarm Status	A	1
XFW10	Nominal Hundreds	N	6
XFW11	Peak Hundreds	N	6
XFW12	Dynamic Hundreds	N	6
XFW13	Ratio Hundreds	N	6

2.14.5 Detailed Segment Description (page 1 of 2)

Ref	Size	Field
XFW00	3	Segment ID: “XFW“
XFW01	3	Sequence Number. Standing order of the vehicle in the train. (1 = first)
XFW02	1	Side Indicator N = Near Rail F = Far Rail
XFW03	5	Axle Number from Front of Train. Target axle counting from the first axle of the train. First axle = 1.
XFW04	2	Axle Number from Lead of Car. Target axle counting from the leading axle of the car.
XFW05	1	Cross-Check Status C = Vehicle sequence mismatch. Vehicle sequence reported by detector is different from local vehicle sequence. A = Axle count mismatch. Total axle count reported for the train differs from local unit to detector.
XFW06	16	Exception Message. Text message reported by detector indicating condition flagged.

2.14.5 Detailed Segment Description (page 2 of 2)

Ref	Size	Field
XFW07	1	Peak Alarm Status A = "A" threshold defined by detector unit was met or exceeded. B = "B" threshold defined by detector unit was met or exceeded. C = "C" threshold defined by detector unit was met or exceeded. D = "D" threshold defined by detector unit was met or exceeded. E = "E" threshold defined by detector unit was met or exceeded.
XFW08	1	Dynamic Alarm Status A = "A" threshold defined by detector unit was met or exceeded. B = "B" threshold defined by detector unit was met or exceeded. C = "C" threshold defined by detector unit was met or exceeded. D = "D" threshold defined by detector unit was met or exceeded. E = "E" threshold defined by detector unit was met or exceeded.
XFW09	1	Ratio Alarm Status A = "A" threshold defined by detector unit was met or exceeded. B = "B" threshold defined by detector unit was met or exceeded. C = "C" threshold defined by detector unit was met or exceeded. D = "D" threshold defined by detector unit was met or exceeded. E = "E" threshold defined by detector unit was met or exceeded.
XFW10	6	Nominal Hundreds. Average wheel impact. Reported in 100-kip units.
XFW11	6	Peak Hundreds. Largest wheel impact. Reported in 100-kip units.
XFW12	6	Dynamic Hundreds. Peak—Nominal. Reported in 100-kip units.
XFW13	6	Ratio Hundreds. Peak/Nominal. Reported in 100-kip units.

2.15 XHB—Hot Box Interface

2.15.1 Detailed Segment Description

This segment contains data pertaining to wheel bearings, as reported by a hot bearing detector. The segment provides information necessary to pinpoint exactly where the defective bearing is on which car of the train. One XHB segment, or set of XHB segments where axle counts exceeds 26, is reported for each car and locomotive in the train. The owner code, car number, and axle count will be supplied from the RRE segment preceding the XHB segment.

2.15.2 Other References

None.

2.15.3 Implementation Status

Complete.

2.15.4 Segment Summary

Ref	Field	Type	Size
XHB00	Segment ID	AN	3
XHB01	Sequence Number	N	3
XHB02	Counter	N	2
XHB03	Exceptions Present	N	2
XHB04	First Exception Location	AN	4
XHB05	First Alarm Status	A	1
XHB06	Bearing Heat Unit of Measure	A	1
XHB07	Bearing Heat Display	N	Variable 4

The XHB segment will be a maximum length of 224 bytes. If any car has more than 26 axles, then multiple XHB segments must be formatted. The XHB02 counter will be used to identify when multiple segments are used. The counter will be a sequential number beginning with 1.

Any additional XHB segments for the same RRE will repeat the same fields XHB00, XHB01, XHB03, XHB04, XHB05, and XHB06. The XHB02 will be incremented by 1 for each XHB segment.

2.15.5 Detailed Segment Description

Ref	Size	Field
XHB00	3	Segment ID: “XHB“
XHB01	3	Sequence Number: Standing order of the vehicle in the train (1 = first)
XHB02	2	Counter: The number of 26-axle sets reported, beginning with 1.
XHB03	2	Exception Present: Number of exceptions detected.
XHB04	4	First Exception Location: First exception location oriented from B end of car or A end of locomotive (L1 or R1, etc.)
XHB05	1	First Alarm Status A = Absolute Alarm C = Car Side Alarm D = Differential Alarm P = Pyro Saturation Alarm S = Simple W= Warm T = Train Side N = None
XHB06	1	Bearing Heat Unit of Measure (above ambient) F = “F” Fahrenheit C = “C” Celsius M= “M” Millimeters
XHB07	Variable 4	Bearing Heat Display XXX.x format with the decimal point implied: entered sequentially as L1, R1–L2, R2, etc., referenced from the B end of the car. There will be 4 bytes per bearing, the number of bearings variable.

Note: The XHB07 field contains one 4-byte temperature value for each bearing on the vehicle. The actual size of the field is calculated using the formula: 4 bytes × 2 bearings per axle × vehicle axle count.

Examples:

Vehicle Type	XHB07 Length
2-axle TTOX car	16 bytes
4-axle vehicle	32 bytes
6-axle vehicle	48 bytes
12-axle articulated car (five pack)	96 bytes
26-axle trough car	208 bytes

If the fixed field length option is used, the field width will default to 7920 bytes (allowing a maximum of 999 axles per car). Nine hundred ninety-nine axles are the maximum numbers of axles that the current T94 specification will allow (3 digits).

Example 1: Bearing record—Car 50—4 axles—Absolute Alarm bearing R2

ID	Sequence	Counter	Exceptions	Loc.	Alarm	UM
XHB	050	00	01	R02	A	F

L1	R1	L2	R2	L3	R3	L4	R4
0300	0310	0280	1800	0350	0370	0210	0340

Example 2: Bearing record—Car 50—4 axles—No exceptions

ID	Sequence	Counter	Exceptions	Loc.	Alarm	UM
XHB	050	00	00	000	N	F

L1	R1	L2	R2	L3	R3	L4	R4
0300	0310	0280	0650	0350	0370	0210	0340

Example 3: Bearing record—Car 33—12 axles—No exceptions

ID	Sequence	Counter	Exceptions	Loc.	Alarm	UM
XHB	033	00	00	000	N	F

L1	R1	L2	R2	L3	R3	L4	R4
0300	0310	0280	0650	0350	0370	0210	0340

L5	R5	L6	R6	L7	R7	L8	R8
0300	0310	0280	0650	0350	0370	0210	0340

L9	R9	L10	R10	L11	R11	L12	R12
0300	0310	0280	0650	0350	0370	0210	0340

2.15.6 Examples

```
AEM008020000535012260221022307 0N4125027GGW0E038025030ANFY03809G02020050050092
RRE001DUP  0000009474A GLK0001037006001
XHB0010001R002NF0300031002800650035003700210034003000310036003 60
RRE002DUP  0000009451A  GLK0002037006001
DYL002DUP  0000009160K00010003700000 XXXXXXXX0N
XHB0020001R002NF0300031002800650035003700210034003000310036003 60
RRE003RTTRX0000370620B GGK0301036004001
XHB0030001R0002NF0300031002800650035003700210034 0
RRE004RTTAX0000753047A GGK0503035004001
XHB0040001L003NF0300031002800650035003700210034 0
RRE005RMACX  0000121355A GGK0402033052026
XHB0050106L005NF0300031002800650035003700210034003000310028006500350037002100340030003100280
650035003700210034003000310028006500350037002100340030003100280065003500370021003400300031002
800650035003700210034002500250026002 60
XHB0050210L001NF0300031002800650035003700210034003000310028006500350037002100340030003100280
650035003700210034003000310028006500350037002100340030003100280065003500370021003400300031002
800650035003700210034005100510052005 20
RRE006RTTAX0000355019A GGP0602033008003
RRE007RCSXT0000620232A GGK0403031012005
EOT020EUPRQ00000270750100K
EOC0000000937
```

2.16 XHW—Hot Wheel Interface

2.16.1 Description

This section contains data pertaining to wheels as reported by a hot wheel detector. The segment provides information necessary to pinpoint exactly where the defective wheel is on which car of the train. One XHW segment, or set of XHW segments where axle count exceeds 26, is reported for each car and locomotive in the train. The owner code, car number, and axle count will be supplied from the RRE segment preceding the XHW segment.

2.16.2 Other References

None.

2.16.3 Implementation Status

Complete.

2.16.4 Segment Summary

Ref	Field	Type	Size
XHW00	Segment ID	AN	3
XHW01	Sequence Number	N	3
XHW02	Counter	N	2
XHW03	Exceptions Present	N	2
XHW04	First Exception Location	AN	4
XHW05	First Alarm Status	A	1
XHW06	Wheel Heat Unit of Measure	A	1
XHW07	Analysis Method	A	1
XHW08	Wheel Heat Display	N	Variable 4

2.16.5 Detailed Segment Description (page 1 of 2)

Ref	Size	Field
XHW00	3	Segment ID: “XHW“
XHW01	3	Sequence Number: Standing order of the vehicle in the train (1 = first)
XHW02	2	Counter: The number of 26-axle sets reported, beginning with 1.
XHW03	2	Exceptions Present : How many exceptions did the car have.
XHW04	4	First Exception Location: First exception location oriented from B end of car or A end of locomotive
XHW05	1	First Alarm Status A = analog hot wheel alarm B = analog cold wheel alarm C = digital hot wheel alarm D = digital cold wheel alarm N = None
XHW06	1	Wheel Heat Unit of Measure (above ambient) F = “F” Fahrenheit C = “C” Celsius M= “M” Millimeters D = “D” Digital Hot / Cold Wheel Detector (No Heat Reading Available)
XHW07	1	Analysis Method T = “T” Tread Analysis P = “P” Plate Analysis

2.16.5 Detailed Segment Description (page 2 of 2)

Ref	Size	Field
XHW08	4	Wheel Heat XXX.x format with the decimal point Implied: Entered sequentially as L1, R1–L2, R2, etc., referenced from the B end of the car. There will be 4 bytes per wheel, the number of wheels variable.

Note: The XHW08 field contains one 4-byte temperature value for each wheel on the vehicle. The actual size of the field is calculated using the formula: 4 bytes × 2 wheels per axle × vehicle axle count.

2.16.6 Examples:

Vehicle type	XHW08 Length
2-axle TTOX car	16 bytes
4-axle vehicle	32 bytes
6-axle vehicle	48 bytes
12-axle articulated car (five pack)	96 bytes
26-axle trough car	208 bytes
46-axle iron highway car	368 bytes

If the fixed field length option is used, the field width will default to 7920 bytes (allowing a maximum of 999 axles per car). Nine hundred ninety-nine axles are the maximum numbers of axles that the current T94 specification will allow (3 digits).

Example 1: Wheel record—Car 50—Analog Hot Wheel alarm—wheel R2—Tread analysis

ID	Sequence	Counter	Exceptions	Loc.	Alarm	UM	A/M
XHW	050	00	01	R002	A	F	T

L1	R1	L2	R2	L3	R3	L4	R4
4750	4900	5100	5400	0100	0090	0070	0140

Example 2: Wheel record—Car 50—No alarm—Tread analysis

ID	Sequence	Counter	Exceptions	Loc.	Alarm	UM	A/M
XHW	050	00	00	0000	N	F	T

L1	R1	L2	R2	L3	R3	L4	R4
0100	0090	0070	0140	0100	0090	0070	0140

Example 3: Wheel record—Car 33—12 axles—No exceptions—Tread analysis

ID	Sequence	Counter	Exceptions	Loc.	Alarm	UM	A/M
XHW	033	00	00	0000	N	F	T

L1	R1	L2	R2	L3	R3	L4	R4
0100	0090	0070	0140	0100	0090	0070	0140

L5	R5	L6	R6	L7	R7	L8	R8
0100	0090	0070	0140	0100	0090	0070	0140

L9	R9	L10	R10	L11	R11	L12	R12
0100	0090	0070	0140	0100	0090	0070	0140

2.17 XSC—Scale Interface

2.17.1 Description

This segment is used to report car weight information from track scales. One XSC segment is reported for each message from the scale.

2.17.2 Other References

None.

2.17.3 Implementation Status

Complete.

2.17.4 Segment Summary

Ref	Field	Type	Size
XSC00	Segment ID	AN	3
XSC01	Sequence Number	N	3
XSC02	Weight Type	A	1
XSC03	Weight Status	A	1
XSC04	Weight	N	8
XSC05	Scale Type	A	1
XSC06	Weight Comment	AN	11
XSC07	Unit of Measure	A	2

2.17.5 Detailed Segment Description

Ref	Size	Field
XSC00	3	Segment ID: “XSC“
XSC01	3	Sequence Number. Standing order of the vehicle in the train (1 = first).
XSC02	1	Weight Type G= Gross N= Net T = Tare ? = Unknown
XSC03	1	Weight Status K= OK L = Overload E= Engine F = Speed Exceeded Scale Limit O= Out of synchronization (scale sequence error) ? = Other
XSC04	8	Weight
XSC05	1	Scale Type C= Coupled in motion H= Hopper S= Static U= Uncoupled in motion ? = Unknown
XSC06	11	Weight Comment
XSC07	2	Unit of Measure Lb= Pounds Kg=Kilograms

2.17.6 Examples

Format Options: Fixed width fields, space delimiter.

```
XSC 003 G K 00192500   S   ________ Lb
XSC 004 G K 00191500   S   ________ Lb
XSC 005 G K 00221100   S  two draft Lb
XSC 006 G K 00213600   S   ________ Lb
XSC 007 G F 00215400   S   ________ Lb
XSC 008 G K 00220800   S   ________ Lb
XSC 009 G K 00067200   S   ________ Lb
```

2.18 HWD—High/Wide Detector

2.18.1 Description

This segment contains data pertaining to areas of the train that have physical dimensions that exceed the allowable (as reported by a high/wide detector unit). HWD segments will only be transmitted when exceptions are detected. The owner code, car number, and axle count will be supplied from the preceding RRE segment.

2.18.2 Other References

None.

2.18.3 Implementation Status

Complete.

2.18.4 Segment Summary

Ref	Field	Type	Size
HWD00	Segment ID	AN	3
HWD01	Sequence Number	N	3
HWD02	Exception Type	A	1
HWD03	Exception Location—Nearest axle	AN	4

2.18.5 Detailed Segment Description

Ref	Size	Field
HWD00	3	Segment ID: “HWD“
HWD01	3	Sequence Number: Standing order of the vehicle in the train (1 = first).
HWD02	1	Exception Type—as reported by the defect detector R= Right Side L = Left Side H= High Load M= Multiple
HWD03	4	Exception Location—Nearest axle and side from B end of car

2.18.6 Example 1: High/Wide record—Car number 50—High Load Alarm—Location R2

ID	Car	Alarm	Location
HWD	050	H	R002

High/Wide reporting would be on an exception basis only.

2.19 DED—Dragging Equipment or Low Air Hose Detector

2.19.1 Description

This segment contains information pertaining to areas of the train that have equipment that is broken or derailed as detected by dragging equipment detectors or low air hoses detected by impact style detectors located between the rails and approximately 2 in. above the rail. DED segments will be reported on an exception basis only. The owner code and axle count will be provided from the preceding RRE segment.

2.19.2 Other References

None.

2.19.3 Implementation Status

Complete.

2.19.4 Segment Summary

Ref	Field	Type	Size
DED00	Segment ID	AN	3
DED01	Sequence Number	N	3
DED02	Alarm Status	A	1
DED03	Exception Location—Car	A	1
DED04	Exception Location—Track	A	1

2.19.5 Detailed Segment Description

Ref	Size	Field
DED00	3	Segment ID: “DED“
DED01	3	Sequence Number: Standing order of the vehicle in the train (1 = first)
DED02	1	Alarm Status: What type of alarm occurred A = Low Air Hose D = Dragging Equipment
DED03	1	Exception Location—Car A = A end B = B end C = Center M= Multiple
DED04	1	Exception Location—Track I = Inside—Between the rails O= Outside—Outside the rails U = Undetermined N = Not able to report M= Multiple Locations—both inside and outside

2.19.6 Example 1: Dragging Equipment record—Car number 50—Low Air Hose Alarm—A end of car—Inside Track Location

ID	Sequence	Alarm	Location—Car	Location—Track
DED	050	A	A	I

Dragging equipment—Low Air Hose reporting would be on an exception basis only.

2.20 THI—Tag Health Information

2.20.1 Description

This segment contains diagnostic information that allows pinpointing of various tag programming problems as well as atypical system events. In cases where a tag problem was reported in an RRE, CEQ, or other segment, this segment provides the information necessary to locate and identify the cause. Information such as cross-check data, performance data, and system status at the time of the read are reported. This segment also indicates why a tag was excluded from a consist report (if not previously reported).

This segment is triggered any time a tag was reported with a problem or (optionally) when the tag was not used in the consist.

2.20.2 Other References

AAR *Manual of Standards and Recommended Practices*, Standard S-918.

2.20.3 Implementation Status

Segment assigned for future development.

2.20.4 Segment Summary

Ref	Field	Type	Size
THI00	Segment ID	AN	3
THI01	Sequence Number	N	3
THI02	Owner Code	A	4
THI03	Owner Equipment Number	N	10
THI04	Format Status	A	1
THI05	Equipment Group Code Status	A	1
THI06	Equipment Group Code (tag)	A	1
THI07	Equipment Group Code (calc)	A	1
THI08	Axle Count Status	A	1
THI09	Axle Count (tag)	N	2
THI10	Axle Count (calc)	N	2
THI11	Length Status	A	1
THI12	Length Reported by Tag (tag)	N	4
THI13	Length Calculated Length (calc)	N	4
THI14	Platform Status	A	1
THI15	Platform Reported by Tag (tag)	AN	1
THI16	Platform Calculated (calc)	AN	1
THI17	Tag Position Status	A	1
THI18	Tag Location	A	1
THI19	Side Indicator	A	1
THI20	Antenna	A	1
THI21	Performance Status	A	1
THI22	Handshakes (tag)	N	2
THI23	Handshakes (calc)	N	2
THI24	Disqualification	A	1
THI25	Miscellaneous Status	A	1
THI26	External Status	A	1
THI27	Movement Status	A	1

2.20.5 Detailed Segment Description (page 1 of 3)

Ref	Size	Field
THI00	3	Segment ID: “THI“
THI01	3	Sequence Number. Standing order of the vehicle in the train. (1 = first)
THI02	4	Owner Code (Standard Carrier Alpha Code)
THI03	10	Owner Equipment Number (sent with leading zeros)
THI04	1	Format Status K = OK U = No tag B = Tag is blank S = Security is blown A = ASCII G = Garbage N = Non-standard tag type T = Toll tag type
THI05	1	Equipment Group Code Status K = OK X = N/A W= Wheel/tag mismatch T = Tag/tag mismatch B = Both tag and wheel mismatch
THI06	1	Equipment Group Code reported by tag
THI07	1	Equipment Group Code calculated
THI08	1	Axle Count Status K = OK X = N/A W= Wheel/tag mismatch T = Tag/tag mismatch B = Both tag and wheel mismatch
THI09	2	Axle Count reported by tag (tag)
THI10	2	Axle Count based on calculation (calc)
THI11	1	Length Status K = OK X = N/A W= Wheel/tag mismatch T = Tag/tag mismatch B = Both tags and wheel mismatch
THI12	4	Length Reported by Tag (tag)
THI13	4	Length Calculated Length (calc)
THI14	1	Platform Status K = OK X = N/A W= Wheel/tag mismatch T = Tag/tag mismatch B = Both wheel and tag mismatch
THI15	1	Platform Reported by Tag 0 = Non-articulated car A,B,C,D... = Platform ID

2.20.5 Detailed Segment Description (page 2 of 3)

Ref	Size	Field
THI16	1	Platform Calculated 0 = Non-articulated car A,B,C,D... = Platform ID
THI17	1	Tag Position Status K = OK X = N/A E = Wrong end S = Wrong side B = Wrong end and side W= Out of window
THI18	1	Tag Location A = A end of car / F end of locomotive B = A end of car / R end of locomotive
THI19	1	Side Indicator R = Right L = Left X = N/A
THI20	1	Antenna N = Near antenna F = Far antenna
THI21	1	Performance Status K = OK A = High absolute performance H = High relative performance L = Low absolute performance R = Low relative performance T = Low performance relative to opposite tag
THI22	2	Handshakes Actual Handshakes Reported (tag)
THI23	2	Handshakes Calculated Handshake Count (calc)
THI24	1	Disqualification ' ' = None C = Cross talk A = Alien D = Duplicate opposite side E = Duplicate same side R = Reflections opposite side S = Reflections same side X = Extra F = Format I = Tier inhibit Z = Confidence fault M= Multiple disqualifications
THI25	1	Miscellaneous Status ' ' = None C = Candidate platform not combined S = Possible sibyl tag I = Individual platform tag M= Mismatched ID

2.20.5 Detailed Segment Description (page 3 of 3)

Ref	Size	Field
THI26	1	External status ' '= None T = Intertrack communication failure I = Interference track is active
THI27	1	Movement Status

2.21 RTD—Raw Tag Data

2.21.1 Description

This segment is used to report raw (unconverted) tag data. One RTD segment is sent for each unique tag read.

2.21.2 Other References

AAR *Manual of Standards and Recommended Practices*, Standard S-918, Appendix P.

2.21.3 Implementation Status

Complete.

2.21.4 Segment Summary

Ref	Field	Type	Size
RTD00	Segment ID	AN	3
RTD01	Sequence Number	N	3
RTD02	Raw Tag Data	AN	40
RTD03	Tier Number	N	1
RTD04	Antenna Number	N	1

2.21.5 Detailed Segment Description

Ref	Size	Field
RTD00	3	Segment ID: “RTD“
RTD01	3	Sequence Number. Standing order of the vehicle in the train. (1 = first).
RTD02	40	Raw Tag Data. Hexadecimal representation of unconverted information from the tag. See AAR *Manual of Standards and Recommended Practices*, Standard S-918, Appendix P.
RTD03	1	Reader Number 0 = Rail equipment tier 1 = Lower intermodal tier 2 = Upper intermodal tier
RTD04	1	Antenna Number 0 = Near antenna 1 = Far antenna

2.21.6 Examples

Format Options: Fixed width fields, space delimiter.

```
RTD 2A563541402940224D41463F2139202020202053 0 1
RTD 2A5635414028263A5552472E3131233020202053 0 0
```

2.22 WRD—Equipment with Atypical Axle Patterns

2.22.1 Description

This segment contains information about rail vehicles that are not part of standard rail equipment stock or specifically addressed in the AAR *Manual of Standards and Recommended Practices*, Standard S-918, Appendix M. These require special algorithms to identify and handle. One WRD segment is reported for each vehicle in the consist.

2.22.2 Other References

AAR *Manual of Standards and Recommended Practices*, Standard S-918, Appendix M.

2.22.3 Implementation Status

Segment assigned for future development.

2.22.4 Segment Summary

Proposed example for discussion.

Ref	Field	Type	Size
WRD00	Segment ID	AN	3
WRD01	Sequence Number	N	3
WRD02	Equipment Group Code	A	1
WRD03	Owner Code	A	4
WRD04	Owner Equipment Number	N	10
WRD05	Orientation	A	1
WRD06	Reserved	AN	1
WRD07	Axle Conversion Code	A	1
WRD08	Tag Status	A	1
WRD09	Tag Detail Status	A	1
WRD10	Hand Shakes Antenna 0	N	2
WRD11	Hand Shakes Antenna 1	N	2
WRD12	Speed of Vehicle	N	3
WRD13	Axle Count	N	2
WRD14	Platform Count	N	2
WRD15	Type Detail Code	N	2

2.22.5 Detailed Segment Description (page 1 of 2)

Proposed example for discussion.

Ref	Size	Field
WRD00	3	Segment ID: “WRD“
WRD01	3	Sequence Number. Standing order of the vehicle in the train. (1 = first) **Note:** Sequence number issue depends on how carried equipment. is to be defined.
WRD02	1	Equipment Group Code. Indicates the vehicle type. Based on axles if not tagged. W= Rail Compatible Multi-Modal Equipment
WRD03	4	Owner Code. Standard Carrier Alpha Code as read from the tag. Blank if not tagged.
WRD04	10	Owner Equipment Number, as read from the tag. Zero if not tagged.
WRD05	1	Orientation. Indicates which end of the car is facing forward. A = “A” end of a railcar or “F” end of a locomotive B = “B” end of a railcar (also called the “Brake” end) or “R” end of a locomotive

2.22.5 Detailed Segment Description (page 2 of 2)

Proposed example for discussion.

Ref	Size	Field
WRD06	1	Reserved for future use.
WRD07	1	Axle Conversion Code. Indicates if there were any problems processing the axle pattern of the vehicle to determine sequence number. G= Good. No problem determining vehicles from axle input. B = Bad. Axle information may have caused an extra vehicle. S = Sequence Logically Correct. Software cannot determine vehicle type.
WRD08	1	Tag Status. Indicates possible problems with tag placement on the vehicle. G= Good. Both tags (right and left) were read. M= Mismatched Identification (Owner code and equipment number only). A second WRD containing the other tag will be sent. L = Left tag missing R= Right tag missing N= No tag read ? = Other
WRD09	1	Tag Detail Status. Indicates any other tag-related problems (such as tag programming, etc.). K= OK A= Axle error, number of axles in tag differs from axle pattern. E= Equipment Group Code error. EGC in tag differs from axle pattern. L = Length error. Length in tag differs from axle pattern (15%). O= Orientation errors. Tag applied on wrong side or wrong end of equipment. P= Platform code error. A multi-pack car had a bad platform code or a non-multi-pack car has a platform code. I = Individual platform tags, multi-packs incorrectly tagged. D= Unused tag read on equipment. H= Performance, handshakes less than that predicted by AMTECH speed and range guidelines. W= Window violation, tags applied outside the AAR window for acceptable application. M= Multiple errors. ? = Other
WRD10	2	Hand Shakes Antenna 0 (99 = 99 or more)
WRD11	2	Hand Shakes Antenna 1 (99 = 99 or more)
WRD12	3	Speed of Vehicle (mph or kph)
WRD13	2	Axle Count
WRD14	2	Platform Count. Total number of platforms for vehicle. Platform count for non-articulated cars is always 1.
WRD15	2	Type Detail Code. Indicates the vehicle sub-type. Based on axles if not tagged. 0 = Data Not Provided 1 = Adapter Car (Stand-alone vehicle to connect Roadrailer to conventional equipment) 2 = Transition Rail Truck (e.g., Coupler Mate—Rail truck used to connect Roadrailer to conventional equipment) 3 = Rail Truck (Bogie) 4 = Rail Compatible Trailer, with Integral Rail Wheels (e.g., Roadrailer Mark IV) 5 = Rail Compatible Trailer, without Integral Rail Wheels (e.g., Roadrailer Mark V) 6 = Bimodal Maintenance-of-Way Equipment 7–9 = Reserved 10= Iron Highway Platform Unit 11= Iron Highway Power Unit 12–63 = Reserved

2.22.6 Examples

Format Options: Fixed width fields, space delimiter.

```
RRE 001 D SSW  0000008085 A G GK 07 05 034 006 001
RRE 002 D SP   0000008002 B G GK 06 06 034 004 001
WRD 003 R DTTX 0000072504 B G GP 06 06 034 004 001
WRD 004 R DTTX 0000720134 A G GK 05 06 034 004 001
WRD 005 R DTTX 0000064064 B G MK 00 06 033 004 001
WRD 005 R DTTX 0000064042 B G MK 07 00 033 004 001
WRD 006 R DTTX 0000062313 B G GP 06 07 033 004 001
WRD 007 R DTTX 0000062717 A G GK 06 07 033 004 001
WRD 008 R APLX 0000004824 A G GK 07 07 032 004 001
WRD 009 R SFLC 0000254119 B G GK 07 08 032 004 001
WRD 010 R DTTX 0000054511 B G LK 08 00 032 004 001
WRD 011 R APLX 0000004571 A G GP 00 00 031 004 001
```

2.23 MMR—Multi Modal Rail Equipment

2.23.1 Description

This segment is used to identify tagged and untagged multi-modal equipment. It provides information about where the equipment is in the train, which direction it is facing, and its ID (if tagged). It also reports any inaccuracies that are seen when processing the equipment. Optionally, if inaccuracies are seen, the MMR segment will be followed by a segment that details what the problems are. (See THI segment). At least one MMR will be sent for each piece of equipment on the train, tagged or untagged. A second MMR will be sent in situations where two tags are found on the same equipment, but the ID is different between them (called an ID mismatch). Position number will be the same for both tags. An RRE segment is always the first segment reported for each piece of equipment or groups of equipment. The MMR will associate the multi-modal rail equipment to the RRE sharing a common sequence number while being reported in the order identified, indicated by the position number.

2.23.2 Other References

AAR *Manual of Standards and Recommended Practices*, Standard S-918, Appendix M.

2.23.3 Implementation Status

Complete.

2.23.4 Segment Summary (page 1 of 2)

Ref	Field	Type	Size
MMR00	Segment ID	AN	3
MMR01	Sequence Number	N	3
MMR02	Equipment Group Code	A	1
MMR03	Owner Code	A	4
MMR04	Owner Equipment Number	N	10
MMR05	Orientation	A	1
MMR06	Type Detail Code	N	2
MMR07	Axle Conversion Code	A	1
MMR08	Tag Status	A	1
MMR09	Tag Detail Status	A	1
MMR10	Hand Shakes Antenna 0	N	2
MMR11	Hand Shakes Antenna 1	N	2
MMR12	Speed of Equipment	N	3
MMR13	Axle Count	N	3

Siemens EX1030
Page 154 of 177

2.23.4 Segment Summary (page 2 of 2)

Ref	Field	Type	Size
MMR14	Platform Count	N	3
MMR15	Position Number	N	3

2.23.5 Detailed Segment Description

Ref	Size	Field
MMR00	3	Segment ID: “MMR“
MMR01	3	Sequence Number
MMR02	1	Equipment Group Code. Indicates the vehicle type. Based on axles if not tagged M= Multi Modal ? = Unknown
MMR03	4	Owner Code. Standard Carrier Alpha Code as read from the tag. Blank if not tagged.
MMR04	10	Owner Equipment Number, as read from the tag. Zero if not tagged.
MMR05	1	Orientation. Indicates which end of the equipment is facing forward. A = “A” front end of trailer B = “B” door end of trailer U = Undetermined (appropriate for transition rail trucks and rail trucks)
MMR06	2	Type Detail Status 0 = Data not provided 1 = Adapter car 2 = Transition Rail Truck 3 = Rail Truck 4 = Trailer, with rail wheels 5 = Trailer, without rail wheels 6 = Bimodal Maintenance-of-Way Equipment 7–9 = Reserved 10= Iron Highway Platform Unit 11= Iron Highway Power Unit 12–63 = Reserved
MMR07	1	Axle Conversion Code. Indicates if there were any problems processing the axle pattern of the vehicle to determine sequence number. G= Good. No problem determining vehicles from axle input. B = Bad. Axle information may have caused an extra vehicle. S = Sequence Logically Correct. Software cannot determine vehicle type.
MMR08	1	Tag Status. Indicates possible problems with tag placement on the equipment. G= Good. Both tags (right and left) were read. M= Mismatched Identification (Owner code and equipment number only.) A second RRE containing the other tag will be sent. L = Left tag missing R = Right tag missing N = No tag read ? = Other

2.23.5 Detailed Segment Description

Ref	Size	Field
MMR09	1	Tag Detail Status. Indicates any other tag-related problems (such as tag programming, etc.). K = OK A = Axle error. Number of axles in tag differs from axle pattern. E = Equipment Group Code error. EGC in tag differs from axle pattern. L = Length error. Length in tag differs from axle pattern (15%). O= Orientation errors. Tag applied on wrong side or wrong end of equipment. P = Platform code error. A multi-pack car had a bad platform code or a non-multi-pack car has a platform code. I = Individual platform tags, multi-packs incorrectly tagged. D = Unused tag read on equipment. H = Performance. Handshakes less than that predicted by AMTECH speed and range guidelines. W= Window violation. Tags applied outside the AAR window for acceptable application. M= Multiple errors ? = Other
MMR10	2	Hand Shakes Antenna 0 (99 = 99 or more)
MMR11	2	Hand Shakes Antenna 1 (99 = 99 or more)
MMR12	3	Speed of Equipment (mph or kph)
MMR13	3	Axle Count
MMR14	3	Platform Count. Total number of platforms for equipment. Platform count for non-articulated cars is always 1.
MMR15	3	Position Number indicating order of equipment per sequence number.

2.23.6 Examples

Format Options: Fixed width fields, space delimiter.

```
RRE 001 R 0000 0000000000 A G  NK 00 00 034 012 006
MMR 001 M AMTK 0000008002 U 02 G  G  K  06  06  034 002 001 001
MMR 001 M BNSF 0000072504 A 05 G  G  K  06  06  034 000 001 002
MMR 001 M AMTK 0000008003 U 03 G  G  K  05  06  034 002 001 003
MMR 001 M BNSF 0000064064 A 05 G  R  K  00  06  033 000 001 004
MMR 001 M AMTK 0000008231 U 03 G  L  K  07  00  033 002 001 005
MMR 001 M BNSF 0000062313 A 05 G  G  K  06  07  033 000 001 006
MMR 001 M AMTK 0000008675 U 03 G  G  K  06  07  033 002 001 007
MMR 001 M BNSF 0000004824 A 05 G  G  K  07  07  032 000 001 008
MMR 001 M AMTK 0000008901 U 03 G  G  K  07  08  032 002 001 009
MMR 001 M BNSF 0000054511 A 05 G  L  K  08  00  032 000 001 010
MMR 001 M AMTK 0000008056 U 02 G  G  K  09  04  031 002 001 011
```

2.24 SIM—System Integrity Messages

2.24.1 Description

This segment contains the information pertaining to the health of the integrated wayside equipment. Based upon the equipment, checks can be performed both pre- and post-train. There will be one SIM segment per integrated equipment type.

2.24.2 Other References

None.

2.24.3 Implementation Status

Complete.

2.24.4 Segment Summary

Ref	Field	Type	Size
SIM00	Segment ID	AN	3
SIM01	Equipment Type	N	2
SIM02	Manufacturer Code	N	3
SIM03	Event Code	N	3
SIM04	Text Message	AN	64

2.24.5 Detailed Segment Description

Ref	Size	Field
SIM00	3	Segment ID: SIM
SIM01	2	Equipment Type 01= Hot Box 02= Hot Wheel 03= High Wide Detector 04= Dragging Equipment Detector 05= Wheel Impact Load Detector (WILD) 06= Sliding Wheel Detector 07= Rail Stress Module 08= Cold Wheel Detector 09= Scales
SIM02	3	Manufacturer Code 000=Unknown 001=Railroad Built 002=Southern Technologies 003=Harmon 004=Union Switch 005=Salient 006=SAIC 007=SAI
SIM03	3	Event Code 000=System Normal 010=System Integrity Failure 020=System Pre-train Failure 030=System Post-train Failure
SIM04	64	Additional Text: Optional vendor defined free-form text message containing additional details about the event.

2.24.6 Examples

Format Options: Fixed width fields, space delimiter

```
SIM 01 001 000 System Normal
SIM 02 005 030 System Post-train Failure
SIM 01 000 010 System Integrity Failure
SIM 03 003 020 System Pre-train Failure
SIM 07 005 010 System Integrity Failure
```

2.25 ECR—Environmental Condition Reporting

2.25.1 Description

This segment is intended to facilitate the reporting of environmental conditions. Such conditions are measured at an AEI site or other wayside device capable of utilizing the T-94 data format. An ECR report can be triggered by a train passing, a preset timer, or a maintenance report, as well as when predetermined conditions are met and/or exceeded.

2.25.2 Other References

None.

2.25.3 Implementation Status

Segment assigned for future development.

2.25.4 Segment Summary

Ref	Field	Type	Size
ECR00	Segment ID	AN	3
ECR01	Outdoor Ambient Temperature	AN	5
ECR02	Outdoor Ambient Temperature Scale	AN	1
ECR03	Indoor Ambient Temperature	AN	5
ECR04	Indoor Ambient Temperature Scale	AN	1
ECR05	Rail Temperature	AN	5
ECR06	Rail Temperature Scale	AN	1
ECR07	Ballast Temperature	AN	5
ECR08	Ballast Temperature Scale	AN	1
ECR09	Wind Speed	AN	4
ECR10	Wind Gust	AN	4
ECR11	Wind Speed and Gust Scale	AN	1
ECR12	Wind Direction	AN	3
ECR13	Relative Humidity	AN	3
ECR14	Barometric Pressure	AN	5
ECR15	Rain in Previous 24 Hours	AN	5
ECR16	Rain Scale	AN	1
ECR17	Rail Neutral Temperature (RNT)	AN	5
ECR18	RNT Scale	AN	1
ECR19	Dew Point	AN	4
ECR20	Dew Point Scale	AN	1

2.25.5 Detailed Segment Description (page 1 of 2)

Ref	Size	Field
ECR00	3	Segment ID
ECR01	5	Outdoor Ambient Temperature Range (–100 to +160 degrees) Resolution (0.1 degrees) X = Cannot detect
ECR02	1	Outdoor Ambient Temperature Scale C = Celsius F = Fahrenheit X = Cannot detect
ECR03	5	Indoor Ambient Temperature Range (–100 to +160 degrees) Resolution (0.1 degrees) X = Cannot detect
ECR04	1	Indoor Ambient Temperature Scale C = Celsius F = Fahrenheit X = Cannot detect
ECR05	5	Rail Temperature Range (–100 to +190 degrees) Resolution (0.1 degrees) X = Cannot detect
ECR06	1	Rail Temperature Scale C = Celsius F = Fahrenheit X = Cannot detect
ECR07	5	Ballast Temperature Range (–100 to +160 degrees) Resolution (0.1 degrees) X = Cannot detect
ECR08	1	Ballast Temperature Scale C = Celsius F = Fahrenheit X = Cannot detect
ECR09	4	Wind Speed Range (0.0 to 200.0) X = Cannot detect
ECR10	4	Wind Gust Range (0.0 to 200.0) X = Cannot detect
ECR11	1	Wind Speed and Gust Scale A = Miles per Hour B = Kilometers per Hour C = Meters per Second X = Cannot detect
ECR12	3	Wind Direction Range (000 to 360) X = Cannot detect

2.25.5 Detailed Segment Description (page 2 of 2)

Ref	Size	Field
ECR13	3	Relative Humidity Range (0 to 100) Measured as a percentage X = Cannot detect
ECR14	5	Barometric Pressure Range (800.0 to 1100.0) Measured in millibars X = Cannot detect
ECR15	5	Rain in Previous 24 Hours Range (0.0 to 1000.0) X = Cannot detect
ECR16	1	Rain Scale A = Inches B = Millimeters C = Centimeters X = Cannot detect
ECR17	5	Rail Neutral Temperature (RNT) Range (–100 to +200 degrees) Resolution (0.1 degrees) X = Cannot detect
ECR18	1	RNT Scale C = Celsius F = Fahrenheit X = Cannot detect
ECR19	4	Dew Point Range (–40.0 to +212.0 degrees) X = Cannot detect
ECR20	1	Dew Point Scale C = Celsius F = Fahrenheit X = Cannot detect

2.25.6 Examples

Format Options: Fixed width fields, space delimiter

```
ECR00100845F00721F01048F00978F02550451A1800251000000011A00976F0412F
```

2.26 TRK—Track Identifier

2.26.1 Description

This segment is used to supplement the Site ID field in the AEM record when the consist being reported is a track consist rather than a train consist. It contains the track or zone identifier and information on the orientation of the vehicles on the track. If the AEM message contains a train consist, this segment should not be included in the message. Only one TRK segment should be included in an AEM message, and it can be placed anywhere in the message between the AEM and EOC segments.

2.26.2 Other References

None.

2.26.3 Implementation Status

Segment assigned for future development.

2.26.4 Segment Summary

Ref	Field	Type	Size
TRK00	Segment ID	AN	3
TRK01	Location/Circ 7/Station No./Train ID	AN	10
TRK02	Yard Identifier	AN	2
TRK03	Track Identifier	AN	4
TRK04	Zone Identifier	AN	2
TRK05	Spot	AN	2
TRK06	Consist Orientation	A	1
TRK07	Comments	AN	40

2.26.5 Detailed Segment Description

Ref	Size	Field
TRK00	3	Segment ID: “TRK“
TRK01	10	Location/Circ 7/Station No./Train ID
TRK02	2	Yard Identifier
TRK03	4	Track Identifier
TRK04	2	Zone Identifier
TRK05	2	Spot
TRK06	1	Consist orientation code. Indicates the direction on the track the consist is reported starting with the RRE segment with a sequence number of 1. N = The vehicle consist is reported from north to south S = The vehicle consist is reported from south to north W= The vehicle consist is reported from west to east E = The vehicle consist is reported from east to west F = Front to back B = Back to front
TRK07	40	User-defined comments

2.26.6 Example

Format Option: Fixed width fields, space delimiter

```
TRK00101BNUPOCOI0201100000Fmanual track verification
```

2.27 Examples

2.27.1 Example 1: Container Train

```
AEM 00802 0000001 950327 1021 1023 000 N 410 0002 G G W 0 E 043 038 041 A N F N 05333 G 03 03 018 018 02 26
RRE   001  D  UP      0000006338      A     G   GK  05  03    038    006  001
RRE   002  D  UP      0000002521      B     G   GK  05  05    038    006  001
RRE   003  D  CNW     0000008053      B     G   GK  07  06    038    006  001
RRE   004  R  DTTX    0000073724      B     G   GK  06  06    039    012  005
CEQ   004  I  GCEU    0000484271      479   K   00  08  B   B  B  1  L
CEQ   004  I  APLU    0000489220      479   K   00  10  B   C  T  1  L
CEQ   004  I  APLU    0000380152      479   K   00  08  B   C  B  1  L
CEQ   004  I  APLU    0000458171      450   K   00  09  B   D  B  1  L
CEQ   004  I  APLU    0000489649      479   K   00  08  B   E  B  1  L
CEQ   004  I  APLU    0000489115      479   K   00  08  B   A  B  1  L
RRE   005  R  DTTX    0000073046      B     G   GK  06  07    039    012  005
CEQ   005  I  APLS    0000286959      198   K   08  00  B   B  B  1  R
CEQ   005  I  CHAU    0000580157      479   K   02  00  B   B  T  1  R
CEQ   005  I  APLU    0000490172      479   K   10  00  B   C  B  1  R
CEQ   005  I  APLU    0000490198      479   K   00  11  B   C  T  1  L
CEQ   005  I  APLU    0000490132      479   K   09  00  B   D  T  1  R
CEQ   005  I  GCEU    0000484158      479   K   00  09  B   D  B  1  L
CEQ   005  I  APLU    0000490121      479   K   00  09  B   E  B  1  L
CEQ   005  I  APLU    0000485649      479   K   00  08  B   E  T  1  L
CEQ   005  I  APLU    0000488903      479   K   00  10  B   A  T  1  L
RRE   006  R  BN      0000064119      A     G   GK  06  05    039    012  005
CEQ   006  I  APLU    0000459113      450   K   09  00  A   A  T  4  R
CEQ   006  I  APLU    0000490265      479   K   00  08  A   E  B  4  L
CEQ   006  I  APLU    0000455396      450   K   00  08  A   E  T  4  L
CEQ   006  I  GSTU    0000840505      399   K   00  08  A   D  T  4  L
CEQ   006  I  APLU    0000489541      479   K   00  08  A   D  B  4  L
CEQ   006  I  APLU    0000882499      399   K   00  09  A   C  T  4  L
CEQ   006  I  APLU    0000488619      479   K   00  09  A   C  B  4  L
CEQ   006  I  APLS    0000282785      198   K   00  06  A   B  B  4  L
RRE   007  R  DTTX    0000075207      B     G   RK  06  00    040    012  005
CEQ   007  I  APLU    0000460154      450   K   00  08  B   B  B  1  L
CEQ   007  I  APLU    0000702086      399   K   00  09  B   D  B  1  L
CEQ   007  I  APLU    0000488257      479   K   00  07  B   D  T  1  L
CEQ   007  I  TRLU    0000481166      479   K   00  10  B   E  B  1  L
CEQ   007  I  GCEU    0000484487      479   K   00  06  B   E  T  1  L
CEQ   007  I  APLU    0000885244      399   K   00  09  B   A  B  1  L
CEQ   007  I  APLU    0000966465      399   K   00  07  B   A  T  1  L
RRE   008  R  DTTX    0000075306      A     G   GP  06  06    040    012  005
CEQ   008  I  APLU    0000452593      450   K   00  08  A   A  B  4  L
CEQ   008  I  CHAU    0000580254      479   K   00  07  A   E  T  4  L
CEQ   008  I  APLU    0000801000      399   K   00  09  A   D  B  4  L
CEQ   008  I  APLU    0000803338      399   K   00  06  A   C  B  4  L
CEQ   008  I  APLU    0000460395      450   K   00  07  A   B  B  4  L
CEQ   008  I  APLU    0000458324      450   K   00  08  A   B  T  4  L
RRE   009  R  DTTX    0000073375      A     G   GP  05  06    041    012  005
CEQ   009  I  APCU    0000530146      529   K   00  08  A   A  T  4  L
CEQ   009  I  APLU    0000591359      399   K   00  09  A   E  B  4  L
CEQ   009  I  APLU    0000490158      479   K   00  11  A   D  T  4  L
CEQ   009  I  APLU    0000704491      399   K   00  07  A   C  B  4  L
CEQ   009  I  APLU    0000490144      479   K   00  09  A   B  B  4  L
RRE   010  R  DTTX    0000056133      A     G   GK  06  07    041    004  001
RRE   011  R  DTTX    0000720355      B     G   GP  06  06    041    012  005
CEQ   011  I  APLU    0000489103      479   K   00  08  B   B  B  1  L
CEQ   011  I  GSTU    0000864040      399   K   00  08  B   B  T  1  L
CEQ   011  I  APLU    0000142586      399   K   00  08  B   C  T  1  L
CEQ   011  I  APLU    0000481895      479   K   00  08  B   C  B  1  L
CEQ   011  I  APLU    0000455731      450   K   00  09  B   D  B  1  L
CEQ   011  I  APLU    0000451517      450   K   00  08  B   E  B  1  L
CEQ   011  I  APLU    0000124997      399   K   00  09  B   A  B  1  L
```


Siemens EX1030
Page 162 of 177

```
RRE  012  R  DTTX   0000072727    A    G  GP 05 05   041   012 005
CEQ  012  I  APLU   0000484486    479  K  08 00 A  A  T  2  R
CEQ  012  I  APLU   0000893080    399  K  00 08 A  A  B  2  L
CEQ  012  I  APLU   0000989214    399  K  00 10 A  E  T  2  L
CEQ  012  I  APLU   0000118340    399  K  00 07 A  D  T  2  L
CEQ  012  I  APLU   0000458071    450  K  00 09 A  C  B  2  L
CEQ  012  I  APLU   0000458318    450  K  00 08 A  C  T  2  L
CEQ  012  I  APLU   0000485165    479  K  00 07 A  B  B  2  L
CEQ  012  I  APLU   0000489958    479  K  00 08 A  B  T  2  L
RRE  013  R  DTTX   0000073442    B    G  GK 06 06   042   012 005
CEQ  013  I  APLU   0000461066    450  K  00 10 B  B  T  1  L
CEQ  013  I  TRLU   0000428620    399  K  00 07 B  B  B  1  L
CEQ  013  I  APLU   0000482121    479  K  00 09 B  C  T  1  L
CEQ  013  I  APLU   0000485093    479  K  00 09 B  D  B  1  L
CEQ  013  I  ICSU   0000160488    399  K  00 08 B  E  T  1  L
CEQ  013  I  APLU   0000450813    450  K  00 09 B  A  T  1  L
RRE  014  R  DTTX   0000072035    B    G  GP 06 06   042   012 005
CEQ  014  I  APLU   0000891451    399  K  08 00 B  B  B  1  R
CEQ  014  I  APLU   0000490050    479  K  07 00 B  B  T  1  R
CEQ  014  I  APLU   0000452745    450  K  00 08 B  C  T  1  L
CEQ  014  I  APLU   0000451981    450  K  00 08 B  C  B  1  L
CEQ  014  I  APLU   0000701470    399  K  06 00 B  D  T  1  R
CEQ  014  I  APLU   0000380169    479  K  07 00 B  D  B  1  R
CEQ  014  I  CHAU   0000580102    479  K  04 00 B  E  T  1  R
CEQ  014  I  GSTU   0000867918    399  K  00 08 B  E  B  1  L
CEQ  014  I  TRLU   0000481033    479  K  09 00 B  A  T  1  R
RRE  015  R  DTTX   0000074063    A    G  RK 00 05   042   012 005
CEQ  015  I  APLU   0000983297    399  K  00 08 A  A  B  4  L
CEQ  015  I  APLU   0000454799    450  K  00 08 A  A  T  4  L
CEQ  015  I  APLU   0000451526    450  K  00 08 A  E  B  4  L
CEQ  015  I  APLU   0000456112    450  K  00 08 A  E  T  4  L
CEQ  015  I  APLU   0000490014    479  K  00 07 A  D  B  4  L
CEQ  015  I  APLU   0000450593    450  K  00 08 A  C  B  4  L
CEQ  015  I  APLU   0000457470    450  K  00 08 A  C  T  4  L
CEQ  015  I  APLU   0000135870    399  K  00 08 A  B  B  4  L
CEQ  015  I  APLU   0000450707    450  K  00 08 A  B  T  4  L
RRE  016  R  DTTX   0000062108    A    G  GK 05 06   042   012 005
CEQ  016  I  APLU   0000480266    479  K  07 00 A  A  T  4  R
CEQ  016  I  APLS   0000288833    198  K  00 10 A  A  B  4  L
CEQ  016  I  APLU   0000890249    399  K  08 00 A  E  T  4  R
CEQ  016  I  TRLU   0000225350    200  K  07 00 A  E  B  1  R
CEQ  016  I  APLS   0000279344    200  K  00 08 A  D  B  4  L
CEQ  016  I  APLS   0000283696    198  K  00 05 A  D  B  1  L
CEQ  016  I  APLU   0000490017    479  K  07 00 A  C  T  4  R
CEQ  016  I  APLS   0000280342    200  K  00 05 A  C  B  1  L
CEQ  016  I  APLS   0000285654    198  K  00 06 A  B  B  4  L
CEQ  016  I  APLS   0000290465    198  K  06 00 A  B  B  1  R
CEQ  016  I  APLU   0000489184    479  K  00 07 A  B  T  4  L
RRE  017  R  DTTX   0000062709    A    G  GP 05 04   042   012 005
CEQ  017  I  APLU   0000980409    399  K  09 00 A  A  T  4  R
CEQ  017  I  APLU   0000456272    450  K  06 00 A  D  B  4  R
CEQ  017  I  APLU   0000453506    450  K  07 00 A  C  B  4  R
CEQ  017  I  APLU   0000460484    450  K  05 00 A  C  T  4  R
CEQ  017  I  APLU   0000881432    399  K  07 00 A  B  T  4  R
RRE  018  R  DTTX   0000064046    A    G  LK 06 00   043   012 005
CEQ  018  I  APLS   0000279614    200  K  09 00 A  A  B  4  R
CEQ  018  I  APLU   0000881823    399  K  06 00 A  E  T  4  R
CEQ  018  I  TRLU   0000428678    399  K  07 00 A  D  B  4  R
CEQ  018  I  APLU   0000802672    399  K  06 00 A  C  B  4  R
CEQ  018  I  APLU   0000982319    399  K  09 00 A  B  B  4  R
CEQ  018  I  APLU   0000486305    479  K  08 00 A  B  T  4  R
RRE  019  R  DTTX   0000062268    A    G  GP 03 05   042   012 005
CEQ  019  I  APLU   0000484971    479  K  08 00 A  A  T  4  R
```

```
CEQ  019  I  GSTU   0000447978    200  K  08  00  A  A  B  4  R
CEQ  019  I  APLU   0000480183    479  K  07  00  A  E  T  4  R
CEQ  019  I  APLU   0000451009    450  K  09  00  A  D  T  4  R
CEQ  019  I  APLU   0000881397    399  K  08  00  A  C  B  4  R
CEQ  019  I  APLS   0000283606    198  K  08  00  A  B  B  4  R
CEQ  019  I  APLU   0000459795    450  K  06  00  A  B  T  4  R
RRE  020  R  DTTX   0000075875    B    G  GK  06  06   043   012  005
CEQ  020  I  APLU   0000989443    399  K  09  00  B  B  T  1  R
CEQ  020  I  APLU   0000982872    399  K  09  00  B  C  T  1  R
CEQ  020  I  APLU   0000490338    479  K  09  00  B  D  T  1  R
CEQ  020  I  APLU   0000454446    450  K  07  00  B  D  B  1  R
CEQ  020  I  APLU   0000456997    450  K  07  00  B  E  B  1  R
CEQ  020  I  APLU   0000460732    450  K  07  00  B  E  T  1  R
CEQ  020  I  APLS   0000285776    198  K  00  00  B  A  B  4  R
RRE  021  R  DTTX   0000062137    A    G  GK  05  00   042   012  005
CEQ  021  I  APLU   0000126559    399  K  07  00  A  E  B  4  R
CEQ  021  I  APLU   0000450111    450  K  07  00  A  E  T  4  R
CEQ  021  I  APLU   0000486294    479  K  08  00  A  D  T  4  R
CEQ  021  I  APLU   0000883171    399  K  00  00  A  D  B  4  R
CEQ  021  I  APLU   0000452068    450  K  08  00  A  C  T  4  R
CEQ  021  I  APLU   0000488197    479  K  00  00  A  B  T  4  R
EOT  021  E  UPRQ   0000011045    00   00  K
EOC     0000006832
```

2.27.2 Example 2: Train with Dynamic Locomotive Tags

```
AEM 00721 0000049 950329 0150 0151 080N4000028 G G E 0 E 040038039A  N F N 00706 G04040070070052

RRE  001  D  SP   0000008354 A   G  GK 06  01  038  006  001
RRE  002  D  SP   0000009313 A   G  GK 06  03  038  006  001
RRE  003  D  SP   0000008386 A   G  GK 05  01  039  006  001
RRE  004  D  SP   0000008579 B   G  GK 06  02  039  006  001
DYL  004  D  SP   0000008579 K  00 05 00  013  00000  X X X X X X X X 1 Y
RRE  005  R  DODX 0000598377  A   G  GL 06  02  039  006  001
RRE  006  R  SPFE 0000457145  A   G  GP 06  02  039  004  001
RRE  007  R  VCY  0000025115  B   G  LK 00  02  039  004  001
RRE  008  R  VCY  0000025229  A   G  GK 06  02  039  004  001
RRE  009  R  VCY  0000025006  A   G  GK 05  02  039  004  001
RRE  010  R  VCY  0000025052  A   G  GK 08  02  040  004  001
RRE  011  R  VCY  0000025351  B   G  GP 06  00  040  004  001
EOT  011  E  SPQ  0000011114  00  00 K
EOC  0000000705
```

2.27.3 Example 3: Train with Scale Weights

```
AEM 00721 1234567 950323 0840 0851 060N4100002 G G W 0 E 003002002B  N F N 02295 G02020180180082
 RRE  001  D  SP    0000007614  A   G  GK  47  24  003  006  001
 RRE  002  D  SP    0000007134  B   G  GK  39  25  002  006  001
 RRE  003  R  SOO   0000075383  B   G  GK  44  30  003  004  001
 XSC  003  G  K     00192500
 RRE  004  R  SP    0000508557  B   G  GP  51  37  003  004  001
 XSC  004  G  K     00191500
 RRE  005  R  TTZX  0000861638  A   G  GK  42  38  002  004  001
 XSC  005  G  K     00221100
 RRE  006  R  TTZX  0000861636  A   G  GK  40  34  002  004  001
 XSC  006  G  K     00213600
 RRE  007  R  TTZX  0000861637  A   G  GK  42  38  002  004  001
 XSC  007  G  K     00215400
 RRE  008  R  TTZX  0000084483  A   G  GK  42  36  002  004  001
 XSC  008  G  K     00220800
 RRE  009  R  GATX  0000015263  B   G  GP  39  44  002  004  001
 XSC  009  G  K     00067200
 RRE  010  R  CNA   0000418647  B   G  GK  45  40  002  004  001
```

```
XSC 010 G K     00063100
RRE 011 R CSXT  0000161717  B   G  GK 50 53 002 004 001
XSC 011 G K     00077700
RRE 012 R SP    0000509076  A   G  GP 73 44 002 004 001
XSC 012 G K     00187700
RRE 013 R SP    0000509605  B   G  GP 42 26 002 004 001
XSC 013 G K     00188100
RRE 014 R TTZX  0000085959  B   G  GK 37 31 003 004 001
XSC 014 G K     00220100
RRE 015 R SP    0000508317  A   G  GP 37 36 003 004 001
XSC 015 G K     00065300
RRE 016 R SP    0000509508  A   G  GP 40 40 002 004 001
XSC 016 G K     00074000
RRE 017 R SP    0000509721  A   G  GP 57 22 003 004 001
XSC 017 G K     00075500
RRE 018 R SP    0000508631  A   G  GP 44 40 002 004 001
XSC 018 G K     00075300
RRE 019 R SP    0000509133  A   G  GP 48 30 002 004 001
XSC 019 G K     00070200
RRE 020 R SSW   0000024373  B   G  GP 30 27 003 004 001
XSC 020 G K     00084200
EOT 041 E SPQ   0000011470  00  00 K
EOC 0000002810
```

2.27.4 Example 4: Train Passing Site with Bad Antenna

```
AEM 00721 0000029 950403 2331 2333 060Y4000191 G G E 0 E 007006006A  N F N 00582 B02020090090044

RRE 001 D SP    0000002727  B   G  RK 38 00 007 006 001
RRE 002 D SP    0000002741  A   G  LK 28 00 007 006 001
RRE 003 R GATX  0000047401  B   G  RK 32 00 007 004 001
RRE 004 R SCPX  0000007081  B   G  RK 36 00 006 004 001
RRE 005 R UTLX  0000067044  A   G  LK 38 00 006 004 001
RRE 006 R LRWN  0000002007  B   G  RK 48 00 006 004 001
RRE 007 R ADN   0000009761  A   G  LK 37 00 006 004 001
RRE 008 R LRWN  0000001214  A   G  LK 48 00 006 004 001
RRE 009 R UTLX  0000066062  B   G  RK 32 00 006 004 001
RRE 010 R UTLX  0000072011  A   G  LK 41 00 006 004 001
RRE 011 R CHVX  0000288003  A   G  LP 00 00 006 004 001
EOC 0000000603
```

3.0 MAINTENANCE REPORTS

3.1 AMH—AEI Maintenance Header

3.1.1 Description

This is the opening segment for each maintenance report. It provides information to the host such as who the reporting site is and what time frame the report covers. This is a mandatory segment. One AMH segment will be sent for maintenance reporting.

3.1.2 Other References

None.

3.1.3 Implementation Status

Complete.

3.1.4 Segment Summary

Ref	Field	Type	Size
AMH00	Segment ID	AN	3
AMH01	AAR Billing Code	AN	5
AMH02	Site ID	AN	7
AMH03	Event Start Date	N	6
AMH04	Event Start Time	N	4
AMH05	Event Stop Time	N	4
AMH06	Time Zone	N	3
AMH07	Daylight Savings Time Indicator	A	1
AMH08	Data Format Version Number	AN	3
AMH09	Sequence Number	N	4
AMH10	Software Version Number	AN	3
AMH11	Century	N	2

3.1.5 Detailed Segment Description (page 1 of 2)

Ref	Size	Field
AMH00	3	Segment ID: “AMH“
AMH01	5	AAR Billing Code. Unique for each owner. First position is 0 (zero) for railroads, and non-0 (non-zero) for non RRs. Next four positions are standard AAR billing codes for railroads and unique substitutes for non-railroads.
AMH02	7	Site ID. Unique site ID for each owner
AMH03	6	Event Start Date (YYMMDD)
AMH04	4	Event Start Time (HHMM) (local time)
AMH05	4	Event Stop Time (HHMM)
AMH06	3	Time Zone, GMT plus ##.#, decimal assumed 5 = Eastern 6 = Central 7 = Mountain 8 = Pacific
AMH07	1	Daylight Savings Time Indicator (Y/N)Y = Daylight savings time is in effect

3.1.5 Detailed Segment Description (page 2 of 2)

Ref	Size	Field
AMH08	3	Data Format Version Number (#.## with . assumed) First digit = Major change (May not be backwards compatible) Second digit = Major enhancement (Is backwards compatible) Third digit = Processing upgrade
AMH09	4	Sequence Number. Incremented after each successful report transaction.
AMH10	3	Software Version Number (#.## with . assumed) First digit = Major change (May not be backwards compatible) Second digit = Major enhancement (Is backwards compatible) Third digit = Processing upgrade
AMH11	2	Century

3.1.6 Examples

Format Options: Fixed width fields, space delimiter.

```
AMH 007021234567 950403 1402 0000 060 Y 410 0000 411 19
```

3.2 MTS—Maintenance Data

3.2.1 Description

This segment provides information about each event recorded by the site status logger. Data reported includes when the reported event occurred, the event type, and supporting information about the event. One MTS segment is reported for each message contained in the unit's outgoing maintenance log.

3.2.2 Other References

None.

3.2.3 Implementation Status

Severity Level is always “N.” All other fields are complete.

3.2.4 Segment Summary

Ref	Field	Type	Size
MTS00	Segment ID	AN	3
MTS01	Event Date	N	6
MTS02	Event Time	N	6
MTS03	Event Code	N	4
MTS04	Severity Level	A	1
MTS05	Originating Process ID	N	3
MTS06	Sequence Number	N	4
MTS07	Message	AN	20
MTS08	Additional text	AN	32
MTS09	Century	N	2

3.2.5 Detailed Segment Description

Ref	Size	Field
MTS00	3	Segment ID: “MTS“
MTS01	6	Event Date (YYMMDD)
MTS02	6	Event Time (HHMMSS)
MTS03	4	Event Code. Code used to identify which event occurred.
MTS04	1	Severity Level. Indicates how serious the event was. N= Normal. Informational only. W= Warning. Event may affect system operation. F = Event relates to a system failure.
MTS05	3	Originating Process ID. Code that indicates which APU-102 process reported the event.
MTS06	4	Sequence Number. Indicates the train sequence number to which the event applies.
MTS07	20	Message. Text message used to identify the event.
MTS08	32	Additional Text. Free-form text message containing additional details about the event.
MTS09	2	Century

3.2.6 Examples

Format Options: Fixed width fields, space delimiter.

```
MTS 950315 181947 0004 N 001 0002 Presence Startup   00000000 19
MTS 950315 182059 0005 N 001 0002 Presence Clear     00B4002D 19
MTS 950315 182225 0042 N 010 0003 Line     Busy      ATDTW    555-1212     19
MTS 950315 182225 0038 N 010 0003 Process  Idle....  00008298 19
MTS 950315 182356 0015 N 010 0003 Modem    Connected ATDTW    555-1212     19
MTS 950315 182357 0018 N 010 0003 Remote   Access    Init     SPT94C.ACC   19
MTS 950315 182400 0021 N 010 0003 Response Match     SP       TOPS         19
MTS 950315 182402 0023 N 010 0002 File     Xfer      Start    00010002.RPT 19
MTS 950315 182408 0024 N 010 0002 File     Xfer      Comp     00010002.RPT 19
MTS 950315 182419 0051 N 010 0003 Time     of        Day      Update       18:24:30 19
MTS 950315 182419 0081 N 010 0002 Host     Time      Valid    00000000     19
MTS 950315 182419 0021 N 010 0002 Response Match     DATA     ACCEPTED     19
MTS 950315 182419 0044 N 010 0002 Data     Accepted  00000000 19
MTS 950315 182419 0022 N 010 0002 Remote   Access    Comp     00000000     19
MTS 950315 182427 0038 N 010 0003 Process  Idle....  00008298 19
```

3.3 MS—End Of Maintenance

3.3.1 Description

The EMS serves as the terminating segment for the maintenance report. This is a mandatory segment. The EMS will always be the last segment of the maintenance report.

3.3.2 Other References

None.

3.3.3 Implementation Status

Complete.

3.3.4 Segment Summary

Ref	Field	Type	Size
EMS00	Segment ID	AN	3
EMS01	Total Byte Count	N	10

3.3.5 Detailed Segment Description

Ref	Size	Field
EMS00	3	Segment ID: “EMS“
EMS01	10	Total Byte Count. The last segment of the maintenance report. Count is from the maintenance header up to, but not including, this segment.

3.3.6 Examples

Format Options: Fixed width fields, space delimiter.

```
EMS 0000000936
```

APPENDIX A
TABLES

1.0 DATA VALUES FOR THE EQUIPMENT GROUP CODES (EGC)

Note: See the S-918 document for most current listing.

Value	ASCII Character	Description	T-94 Segment
0	?	Other	
1	@	Railcar Cover	HAT
2	A	Reserved	
3	B	Reserved	
4	C	Train Number Tag (Locomotive Variable Data)	
5	D	Locomotive	RRE
6	E	End-of-Train Device	EOT
7	F	Reserved	
8	G	Generator Set	GEN
9	H	Reserved	
10	I	Intermodal Container	CEQ
11	J	Reserved	
12	K	Marker Tags	
13	L	Reserved	
14	M	Reserved (Formerly Non Revenue Rail)	
15	N	Reserved	
16	O	Reserved	
17	P	Tractor (Power)	
18	Q	Straight Truck	
19	R	Railcar (Includes Non-Revenue Railcars)	RRE
20	S	Dolly	
21	T	Trailer	CEQ
22	U	Reserved	
23	V	Reserved	
24	W	Rail Compatible Multi-Modal Equipment	WRD/MMR
25	X	Reserved	
26	Y	Reserved	
27	Z	Chassis	CEQ
28	[	Passive Alarm Tag	ALM
29	\	Reserved	
30	]	Reserved	
31	^	Experimental Use / Other	RTD

2.0 UNITS OF MEASUREMENT INFORMATION

The following fields are affected by the unit of measurement as specified:

Segment	Field(s)	English Units	Metric Units
AEM	Speed, max, min, avg	miles per hour	kilometers per hour
AEM	Train length	feet	decimeters
RRE	Speed	miles per hour	kilometers per hour
DYL	Volume of fuel	100 gallons	100 liters
DYL	Cumulative kW hours	100 HP hours	100 kW hours
CEQ	Length	feet	decimeters
XSC	Weight	pounds	kilograms

3.0 DATA SEGMENTS AND LOOPING STRUCTURE (PAGE 1 OF 3)

Segment	Loop level 1	Loop level 2	Loop level 3	Status	Comments	Max Occurs
AEM	1	1		Required		1
RRE	2	1	1	Optional	Begin RRE loop1	999
EOT	2	2	1	Optional		99
ALM	2	3	1	Optional		1
TST	2	4	1	Optional		1
THI	2	5	1	Optional		1
RTD	2	6	1	Optional		99
HAT	2	7	1	Optional		99
DYI	2	8	1	Optional		1
DYL	2	9	1	Optional		9
DYR	2	10	1	Optional		1
RSE	2	11	1	Optional		1
GEN	2	12	1	Optional		99
DED	2	13	1	Optional		1
HWD	2	14	1	Optional		1
XAC	2	15	1	Optional		99
XFW	2	16	1	Optional		1
XHB	2	17	1	Optional		99
XHW	2	18	1	Optional		99
XSC	2	19	1	Optional		1
CEQ	2	20	1	Optional	Begin CEQ loop inside of RRE loop	999
ALM	2	20	2	Optional		1
TST	2	20	3	Optional		1
THI	2	20	4	Optional		1
RTD	2	20	5	Optional		99
DYI	2	20	6	Optional		1
GEN	2	20	7	Optional	End of CEQ loop	99

3.0 DATA SEGMENTS AND LOOPING STRUCTURE (PAGE 2 OF 3)

Segment	Loop level 1	Loop level 2	Loop level 3	Status	Comments	Max Occurs
MMR	2	21	1	Optional	Begin MMR loop inside of RRE loop	999
ALM	2	21	2	Optional		1
TST	2	21	3	Optional		1
THI	2	21	4	Optional		1
RTD	2	21	5	Optional		99
DED	2	21	6	Optional		1
XAC	2	21	7	Optional		99
XFW	2	21	8	Optional		1
XHB	2	21	9	Optional		99
XHW	2	21	10	Optional	End of MMR loop and RRE loop	99
WRD	3	1	1	Optional	Begin WRD loop	999
EOT	3	2	1	Optional		99
ALM	3	3	1	Optional		1
TST	3	4	1	Optional		1
THI	3	5	1	Optional		1
RTD	3	6	1	Optional		99
HAT	3	7	1	Optional		99
DYI	3	8	1	Optional		1
DYL	3	9	1	Optional		9
DYR	3	10	1	Optional		1
RSE	3	11	1	Optional		1
GEN	3	12	1	Optional		99
DED	3	13	1	Optional		1
HWD	3	14	1	Optional		1
XAC	3	15	1	Optional		99
XFW	3	16	1	Optional		1
XHB	3	17	1	Optional		99
XHW	3	18	1	Optional		99
XSC	3	19	1	Optional		1
CEQ	3	20	1	Optional	Begin CEQ loop inside of WRD loop	999
ALM	3	20	2	Optional		1
TST	3	20	3	Optional		1
THI	3	20	4	Optional		1
RTD	3	20	5	Optional		99
DYI	3	20	6	Optional		1
GEN	3	20	7	Optional	End of CEQ loop	99
MMR	3	21	1	Optional	Begin MMR loop inside of WRD loop	999

3.0 DATA SEGMENTS AND LOOPING STRUCTURE (PAGE 3 OF 3)

Segment	Loop level 1	Loop level 2	Loop level 3	Status	Comments	Max Occurs
ALM	3	21	2	Optional		1
TST	3	21	3	Optional		1
THI	3	21	4	Optional		1
RTD	3	21	5	Optional		99
DED	3	21	6	Optional		1
XAC	3	21	7	Optional		99
XFW	3	21	8	Optional		1
XHB	3	21	9	Optional		99
XHW	3	21	10	Optional	End of MMR loop and WRD loop	99
TRK	4	1	1	Optional		1
SIM	5	1	1	Optional		999
EOC	6	1	1	Required		1
Or this can be a health message						
AMH	1	1	1	Required	Begin AMH loop	999
MTS	1	2	1	Optional		99
EMS	1	3	1	Optional	End of AMH loop	1
SIM	2	1	1	Optional		999
EOH	3	1	1	Optional	Possibly need to create an End of Health segment	1

3.1 Looping Structure Example

```
AEM007210000069010201101910460 80N4000041GGE0E045041043ANFN03391G03030410410190
RRE001DSSW 0000008085A GGK0705034006001
EOT001ESPQ 00000912921200K
RTD2A563541402940224D41463F213920202020205301
DYL001DSSW 0000008085K02000001308192 XXXXXXXX1Y
RSE001W0102011019W0102011020100CF0124
XHB0010001R002NF0300031002800650035003700210034003000310036003 60
XHW001000000NFT0100009000700140010000900070014 0
XSC001GK00192500
RRE002DSP  0000008002B GGK0606034004001
RTD2A563541402940224D41463F213920202020205301
DYL002DSP  0000008002K02000001308192 XXXXXXXX1Y
RSE002W0102011020W0102011021100CF0124
XHB0020001R002NF0300031002800650035003700210034003000310036003 60
XHW002000000NFT0100009000700140010000900070014 0
XSC002GK00191500
RRE003RDTTX0000072504B GGP0606034004005
RTD2A563541402940224D41463F213920202020205301
DYI003RDTTX0000072504K0012020109504010732081 0N0100401200000
RSE003W0102011020W0102011021100CF0124
DED003DAI
HWD003RR002
XAC003N00008000                AAA
XFW003N00008000                AAA0000010000110000200000 04
XHB0030001R0002NF0300031002800650035003700210034 0
XHW003000000NFT0100009000700140010000900070014 0
XSC003GK00221100
CEQ003IGCEU0000484271479K0008BBB1L
GEN003IGCEU00004842714K11132010200101
CEQ003IAPLU0000489220479K0010BCT1L
ALM003IAPLU0000489220KN3
DYI003IAPLU0000489220K0011010089504031744011 1N0200802300001
GEN003IAPLU0000489220K11132010200101
CEQ003IAPLU0000380152479K0008BCB1L
GEN003IAPLU0000380152K11132010200101
CEQ003IAPLU0000458171450K0009BDB1L
GEN003IAPLU0000458171K11132010200101
CEQ003IAPLU0000489649479K0008BEB1L
GEN003IAPLU0000489649K11132010200101
CEQ003IAPLU0000489115479K0008BAB1L
GEN003IAPLU0000489115K11132010200101
WRD004RDTTX0000720134A GGK0506034004001
RSE004E0102011020E0102011021000YD0987
XHB0040001R002NF0300031002800650035003700210034003000310036003 60
XHW004000000NFT0100009000700140010000900070014 0
XSC004GK00192500
RRE005R    0000000000A GNK0000034012006
RSE005E0102011020E0102011021000YD0987
XHB0050001R002NF0300031002800650035003700210034003000310036003 60
XHW005000000NFT0100009000700140010000900070014 0
XSC005GK00192500
MMR005MAMTK0000008002A 02GGK0606034002001001
MMR005MBNSF0000072504A 05?GP0606034000001002
MMR005MAMTK0000008003? 03GGK0506034002001003
MMR005MBNSF0000064064A 05?GK0006033000001004
MMR005MAMTK0000008231? 03GGK0700033002001005
MMR005MBNSF0000062313A 05?GP0607033000001006
MMR005MAMTK0000008675? 03GGK0607033002001007
MMR005MBNSF0000004824A 05?GK0707032000001008
MMR005MAMTK0000008901? 03GGK0708032002001009
MMR005MBNSF0000054511B 05?LK0800032000001010
```

```
MMR005MAMTK0000008056B 02GGP0904031002001011
RRE006RUP  0000262019B GGP0606034004001
EOT006EGTWQ00000924750017K
ALM006RUP  0000262019KN1
TST0062A563541402940224D41463F2139202020202053
THI006UP  0000262019NKRRK0404K00300030K0101KAXNK1312  A
RTD2A563541402940224D41463F213920202020205301
HAT006BNSF0000097030131GK27060000N0A   0000000000
DYR006RUP  0000262019K1015NNNNNNNNNN4N6Y1
RSE006W0102011020W0102011045100CF0124
GEN006RUP  0000262019K11132010200101
XHB0060106L005NF0300031002800650035003700210034003000310028006500350037002100340
0003100280065003500370021003400300031002800650035003700210034003000310028006500350
03
7002100340030003100280065003500370021003400250025002600260
XHB0060210L001NF0300031002800650035003700210034003000310028006500350037002100340
3000310028006500350037002100340030003100280065003500370021003400300031002800650035
00
3700210034003000310028006500350037002100340051005100520052 0
XHW006000000NFT0100009000700140010000900070014 0
XSC006GK00213600
EOC0000000348
```

CHANGE RECORD SHEET

Revision	Formal Date of Release	Affected Pages	Purpose of Change and Applicable SPRs
1.0	2/2003	All	Initial release

APPENDIX A
REVISED PAGE DATES

Shown below are the current dates applicable to each page of Section K of the *AAR Manual of Standards and Recommended Practices*. The printed page date is shown in either the lower left or lower right-hand corner of the page. In the event a new specification, standard, or recommended practice does not include an effective date, the printed page date will constitute the effective date.

Page Numbers	
Front	**Reverse**
Cover—2/1/03	Copyright—2/1/03
K–i—2/1/03	K–ii—2/1/03
K–iii—2/1/03	K–iv—2/1/03
K–v—2/1/03	K–vi—2/1/03
K–1—2/1/03	K–2—2/1/03
K–3—2/1/03	K–4—2/1/03
K–5—2/1/03	K–6—2/1/03
K–7—2/1/03	K–8—2/1/03
K–9—2/1/03	K–10—2/1/03
K–11—2/1/03	K–12—2/1/03
K–13—2/1/03	K–14—2/1/03
K–15—2/1/03	K–16—2/1/03
K–17—2/1/03	K–18—2/1/03
K–19—2/1/03	K–20—2/1/03
K–21—2/1/03	K–22—2/1/03
K–23—2/1/03	K–24—2/1/03
K–25—2/1/03	K–26—2/1/03
K–27—2/1/03	K–28—2/1/03
K–29—2/1/03	K–30—2/1/03
K–31—2/1/03	K–32—2/1/03
K–33—2/1/03	K–34—2/1/03
K–35—2/1/03	K–36—2/1/03
K–37—2/1/03	K–38—2/1/03
K–39—2/1/03	K–40—2/1/03
K–41—2/1/03	K–42—2/1/03
K–43—2/1/03	K–44—2/1/03
K–45—2/1/03	K–46—2/1/03
K–47—2/1/03	K–48—2/1/03
K–49—2/1/03	K–50—2/1/03
K–51—2/1/03	K–52—2/1/03
K–53—2/1/03	K–54—2/1/03
K–55—2/1/03	K–56—2/1/03
K–57—2/1/03	K–58—2/1/03
K–59—2/1/03	K–60—2/1/03
K–61—2/1/03	K–62—2/1/03
K–63—2/1/03	K–64—2/1/03
K–65—2/1/03	K–66—2/1/03
K–67—2/1/03	K–68—2/1/03
K–69—2/1/03	K–70—2/1/03
K–71—2/1/03	K–72—2/1/03
K–73—2/1/03	K–74—2/1/03
K–75—2/1/03	K–76—2/1/03

Page Numbers	
Front	**Reverse**
K–77—2/1/03	K–78—2/1/03
K–79—2/1/03	K–80—2/1/03
K–81—2/1/03	K–82—2/1/03
K–83—2/1/03	K–84—2/1/03
K–85—2/1/03	K–86—2/1/03
K–87—2/1/03	K–88—2/1/03
K–89—2/1/03	K–90—2/1/03
K–91—2/1/03	K–92—2/1/03
K–93—2/1/03	K–94—2/1/03
K–95—2/1/03	K–96—2/1/03
K–97—2/1/03	K–98—2/1/03
K–99—2/1/03	K–100—2/1/03
K–101—2/1/03	K–102—2/1/03
K–103—2/1/03	K–104—2/1/03
K–105—2/1/03	K–106—2/1/03
K–107—2/1/03	K–108—2/1/03
K–109—2/1/03	K–110—2/1/03
K–111—2/1/03	K–112—2/1/03
K–113—2/1/03	K–114—2/1/03
K–115—2/1/03	K–116—2/1/03
K–117—2/1/03	K–118—2/1/03
K–119—2/1/03	K–120—2/1/03
K–121—2/1/03	K–122—2/1/03
K–123—2/1/03	K–124—2/1/03
K–125—2/1/03	K–126—2/1/03
K–127—2/1/03	K–128—2/1/03
K–129—2/1/03	K–130—2/1/03
K–131—2/1/03	K–132—2/1/03
K–133—2/1/03	K–134—2/1/03
K–135—2/1/03	K–136—2/1/03
K–137—2/1/03	K–138—2/1/03
K–139—2/1/03	K–140—2/1/03
K–141—2/1/03	K–142—2/1/03
K–143—2/1/03	K–144—2/1/03
K–145—2/1/03	K–146—2/1/03
K–147—2/1/03	K–148—2/1/03
K–149—2/1/03	K–150—2/1/03
K–151—2/1/03	K–152—2/1/03
K–153—2/1/03	K–154—2/1/03
K–155—2/1/03	K–156—2/1/03
K–157—2/1/03	K–158—2/1/03
K–159—2/1/03	K–160—2/1/03