IOM
LAA180313 Rev. B

genuine BINDICATOR®

Bin-Dicator®
Installation & Operation Manual

Ascend v. Duesenfeld
IPR2024-00948
Ex. 2030-001

Bin-Dicator®
Installation & Operation Manual

CONTENTS

I. HANDLING & STORAGE 1
- Inspection and Handling
- Disposal and Recycling
- Storage

II. GENERAL SAFETY 2
- Authorized Personnel
- Use
- Misuse

III. PRODUCT DESCRIPTION 3
- Function
- Features
  - Bantam Bin-Dicator
  - Auto Bin-Dicator
  - Model 'A'
- Technical Specifications
- Approvals

IV. MECHANICAL INSTALLATION 5
- Mounting
  - Figure 1: General Component Layout
  - Figure 2: Mercury Switch Component Layout

V. ELECTRICAL INSTALLATION 9
- General Safety
- Disconnect Requirements
- Wiring

VI. MAINTENANCE 11
- Preventive
- Recommended Spare Parts

VII. DIMENSIONAL DRAWINGS 13

SAFETY SYMBOLS

WARNING:

IDENTIFIES CONDITIONS OR PROCEDURES, WHICH IF NOT FOLLOWED, COULD RESULT IN SERIOUS INJURY. RISK OF ELECTRICAL SHOCK.

CAUTION:

IDENTIFIES CONDITIONS OR PROCEDURES, WHICH IF NOT FOLLOWED, COULD RESULT IN SERIOUS DAMAGE OR FAILURE OF THE EQUIPMENT.

Bin-Dicator®
Installation & Operation Manual

I. HANDLING AND STORAGE

SAVE THESE INSTRUCTIONS

INSPECTION AND HANDLING

Do not dispose of the carton or packing materials.

Each package should be inspected upon receipt for damage that may have occurred due to mishandling during shipping. If the unit is received damaged, notify the carrier or the factory for instructions. Failure to do so may void your warranty. If you have any problems or questions, consult Customer Support at 1-800-778-9242.

DISPOSAL AND RECYCLING

This product can be recycled by specialized companies and must not be disposed of in a municipal collection site. If you do not have the means to dispose of properly, please contact for return and disposal instructions or options.

STORAGE

If the device is not scheduled for immediate installation following delivery, the following steps should be observed:

1. Following inspection, repackage the unit into its original packaging.
2. Select a clean dry site, free of vibration, shock and impact hazards.
3. If storage will be extended longer than 30 days, the unit must be stored at temperatures between 32° and 104° F (0° to 40° C) in non-condensing atmosphere with humidity less than 85%.

CAUTION: DO NOT STORE A NON-POWERED UNIT OUTDOORS FOR A PROLONGED PERIOD.

II. GENERAL SAFETY

AUTHORIZED PERSONNEL

All instructions described in the document must be performed by authorized and qualified service personnel only. Before installing the unit, please read these instructions and familiarize yourself with the requirements and functions of the device. The required personal protective equipment must always be worn when servicing this device.

USE

The device is solely intended for use as described in this manual. Reliable operation is ensured only if the instrument is used according to the specifications described in this document. For safety and warranty reasons, use of accessory equipment not recommended by the manufacturer or modification of this device is explicitly forbidden. All servicing of this equipment must be performed by qualified service personnel only. This device should be mounted in locations where it will not be subject to tampering by unauthorized personnel.

MISUSE

Improper use or installation of this device may cause the following:

- Personal injury or harm
- Application specific hazards such as vessel overfill
- Damage to the device or system

If any questions or problems arise during installation of this equipment, please contact Customer Support at 800-778-9242.

Duesenfeld Ex. 2030-006

III. PRODUCT DESCRIPTION

FUNCTION

Bin-Dicator® diaphragm-type level controls were the original electromechanical point level switches and the first to enjoy general usage in the industry. Bin-Dicator controls eliminate bin overflow, empty bins, clogged conveyors, choked elevators and the resulting damage and waste.

The Bin-Dicator control is a pressure actuated switch for use with free flowing bulk materials at atmospheric pressures. Actuation of the switch is the result of pressure exerted by the bulk material against the diaphragm assembly. De-actuation or switch release is a result of the bulk material clearing away from the diaphragm.

FEATURES

Bantam Bin-Dicator

- 5¾” diameter
- 2 diaphragm material options
- Light duty

Auto-Bin-Dicator

- 8” diameter
- Cast aluminum housing
- Neoprene or SS diaphragm material
- Medium duty

Model ‘A’

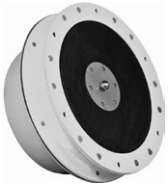

- 10¼” diameter
- Explosion proof model avail.
- 7 diaphragm material options
- Heavy duty

Duesenfeld Ex. 2030-007

TECHNICAL SPECIFICATIONS

FUNCTIONAL

Switch Standard 185° F (85° C)	Model-A	SPDT: 15 amp resistive @ 250 VAC
	Auto-Bin-Dicator	Standard SPDT Snap Action Switch (Dry Rated): 15 amp resistive @ 125, 250 or 480 VAC; Pilot duty 375 VA, 125 VAC or 750 VA, 250 VAC
	Bantam	SPDT: 20 amp resistive @ 250 VAC
Optional Switches	Ratings	250° F (121° C), 800° F (427° C)
	Explosion Proof	Model-A and Auto-Bin-Dicator
Temperature		1.0 of calibrated span (combined linearity, hysteresis, stability) between 0° and 150° F
		32° F to185° F (0° to 85° C) standard, Auto and Bantam
Frame	Polyester-coated aluminum casting	
Cover	Polyester-coated aluminum casting (Auto and Bantam)	
	Standard durable ABS white plastic (Model “A”)	
Construction	Weather-proof or explosion-proof (Auto)	
Diaphragms	Neoprene, Stainless Steel (Auto), Aluminum (Bantam), Steel galvanized back plate; Steel polyester washer (Model “A”)	
Gasket	Rubber (Bantam), Fiber (Model “A”)	
Mounting	Can be mounted on underslopes up to 45 degree (Bantam & Model “A”)	
Shipping Weight	Aluminum 8 lbs (Auto & Bantam), Aluminum 10 lbs (Model “A”)	
Pollution Degree	2	
Installation Category	II	
Altitude	6,526 ft (2000 m)	

DIAPHRAGM MATERIAL	MAX. TEMP	PRODUCT WT. Cu./Ft.	APPLICATION REMARKS
Neoprene Rubber (light)	170° F (77° C)	10-40	Highest sensitivity, abrasion resistant
Neoprene Rubber (medium)	170° F (77° C)	30-100	Strong, resists abrasion, low temperatures
Neoprene Rubber (heavy)	170° F (77° C)	100-350	Strong, resists abrasion, low temperatures
Canvas	200° F (93° C)	10-60	Powders only
Fiberglass	1000° F (538° C)	25-100	Very high temp-see switch temperatures
T-302 SS	800° F (427° C)	30 Min.	Auto-Bin-Dicator® only
Silicone Rubber (heavy)	450° F (232° C)	50-150	Extreme low to medium-high temperature
Teflon® Coated Fiberglass (heavy)	400° F (204° C)	50-150	Corrosion resistant, medium-high temperatures

Note: For high temperature applications, special switches may be required in addition to proper diaphragm selection. Please consult factory.

APPROVALS - CONSULT FACTORY FOR SPECIFIC MODEL LISTING

General Purpose: UL, CSA

Hazardous Location:

UL: Class 1, Groups C & D, Class II, Groups E, F, G

Duesenfeld Ex. 2030-008

IV. MECHANICAL INSTALLATION

WARNING: REMOVE POWER FROM THE UNIT BEFORE INSTALLING, REMOVING, OR MAKING ADJUSTMENTS.

BANTAM

GUIDELINES

- Should be located at a point where the material will normally reach and actuate the diaphragm, and when receding, will completely clear the diaphragm.
- Mounting location should be out of the direct flow of material into the vessel.

MOUNTING

CAUTION: FOR ALL ANGLES OF MOUNTING, LINE C-D MUST BE IN A VERTICAL PLANE AND LINE A-B MUST BE HORIZONTAL.

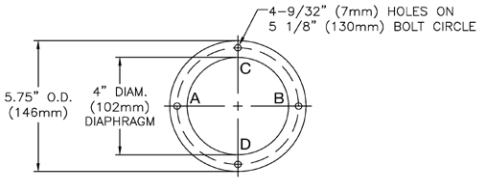

(FOR EXTERNAL MOUNTING ONLY)

1. Lay out 4 and 5 ⅛ in. (10 and 13 cm) concentric circles at point where the Bantam Bin-Dicator device is to be mounted.
2. Cut out the 4 in. (10 cm) circle and drill four 9⁄32 in. holes on the 5 ⅛ in. (13 cm) circle.
3. Insert gasket between vessel wall and face of the unit.
4. Fasten to vessel wall with ¼” mounting bolts.
5. Check operation of lever system and switch; make field adjustments as necessary.
6. Connect conduit and make wiring connections.
7. Replace cover.

Duesenfeld Ex. 2030-009

FIELD ADJUSTMENT

1. Check for binding at the pivot points. If binding is occurring, it is likely due to improper mounting. Check to be sure the lever alarm is in a vertical plane and that the mechanism operates freely.
2. Adjust the counterweight. For reliable operation of the counterweight must be sufficient to return the diaphragm to normal position when the material completely clears the diaphragm. To adjust the counterweight, loosen the nuts holding the segments in place. Move the weight toward the lever arm to decrease the counterweight. To increase the counterweight, move the weight away from the lever arm. Be sure to lock the counterweight at the desired position.
3. Check switch sensitivity. Switch may be adjusted for more sensitive operation by loosening the top machine screw holding the switch in place and shifting the position of the switch to obtain the desired sensitivity. When making this adjustment, be sure the switch returns to normal when the level plate is slowly lowered by hand.

AUTO-BIN-DICATOR

GUIDELINES

- High Level Mounting: unit should be mounted low enough on the vessel wall, so that material will normally cover the diaphragm and provide sufficient head of material before the high level signal is required.
- Low Level Mounting: unit should be mounted high enough on the vessel wall, so that material in its normal flow will cover the diaphragm and provide sufficient head of material before the low level signal is required.
- Mounting location should be out of the direct flow of material into the vessel.

MOUNTING

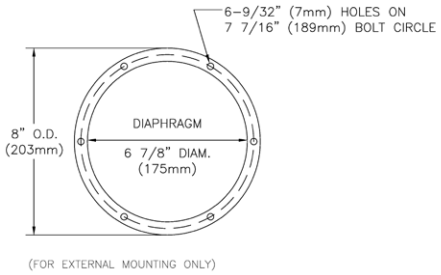

1. Mark two concentric circles on the vessel wall at the point where the unit is to be mounted. One circle should be 6 $^{7}/_{8}$ in. (17 cm) in diameter, the second 7$^{7}/_{16}$ in. (19 cm) in diameter.
2. Cut out the 6 $^{7}/_{8}$ in. (17 cm) circle.
3. Lay out six (6) equally spaced holes on the 7 $^{7}/_{16}$ in. (19 cm) circle.
4. Drill or tap $^{1}/_{4}$ in. for bolts or cap screws.

Duesenfeld Ex. 2030-010

5. Insert the gasket between the vessel wall and the flange of the unit with the conduit entry facing downward.
6. Fasten the unit to the vessel wall with ¼ in. bolts or cap screws.
7. Connect conduit and make wiring connections at switch terminals.
8. Screw cover to housing securely to prevent damage or moisture.
9. Check switch operation by manually depressing diaphragm and releasing. The switch should now respond to the pressure.

MODEL 'A' (Standard or with Mercury Switch)

GUIDELINES

- Should be located at a point where the material in its normal flow will reach and move the diaphragm, and when receding, will completely clear the diaphragm.
- Mounting location should be out of the direct flow of material into the vessel.
- If the material is of lighter density or if the unit is to be mounted on the under-slope, the counterweight must be reduced to provide sensitive operation of the unit.
- If the material is of heavier density or if the unit is mounted on the under-slope, the counterweight must be increased to return the diaphragm to normal as the material clears the diaphragm.

MOUNTING

CAUTION: WHEN MOUNTING LINE C-D MUST BE ON A VERTICAL PLANE AND LINE A-B MUST BE HORIZONTAL.

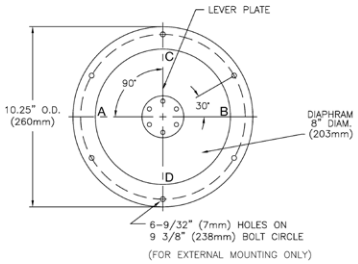

1. Mark two concentric circles on the vessel wall at the point where the unit is to be mounted. One circle should be 8 in. (20 cm) in diameter, the second 9⅜ in. (24 cm) in diameter.
2. Cut out the 8 in. (20 cm) circle.
3. Lay out six (6) equally spaced holes on the 9⅜ in. (24 cm) circle.
4. Drill or tap ¼ in. bolts or cap screws.
5. Insert the gasket between the vessel wall and the flange of the unit with the conduit facing down.
6. Fasten the unit to the vessel wall with ¼ in. bolts or cap screws.

Duesenfeld Ex. 2030-011

7. Check operation of lever system and switch; make field adjustments as necessary.
8. Connect conduit and make wiring connections.
9. Replace cover.

FIELD ADJUSTMENT

1. Check for binding at the pivot points. If binding is occurring, it is likely due to improper mounting. Check to be sure the lever alarm is in a vertical plane and that the mechanism operates freely.
2. Adjust the counterweight. For reliable operation of the counterweight must be sufficient to return the diaphragm to normal position when the material completely clears the diaphragm. To adjust the counterweight, loosen the nuts holding the segments in place. Ad or remove counterweight washers to adjust.
3. Check switch sensitivity. Switch may be adjusted for more sensitive operation by loosening the top machine screw holding the switch in place and shifting the position of the switch to obtain the desired sensitivity. When making this adjustment, be sure the switch returns to normal when the level plate is slowly lowered by hand.

Figure 1. General Component Layout

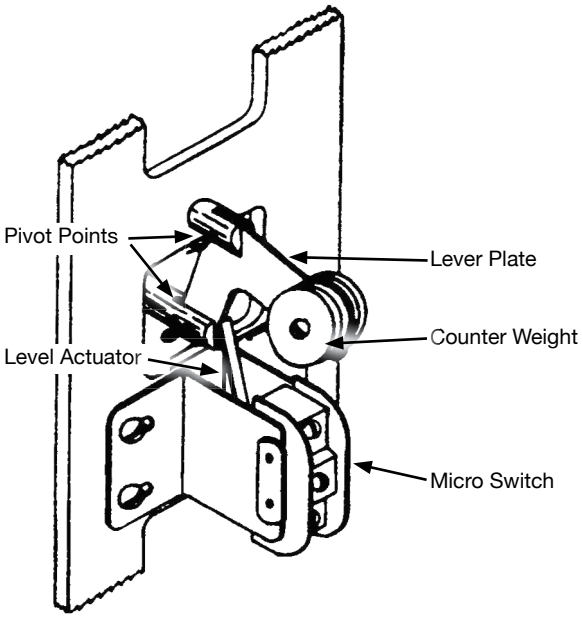

Figure 2. Mercury Switch Component Layout

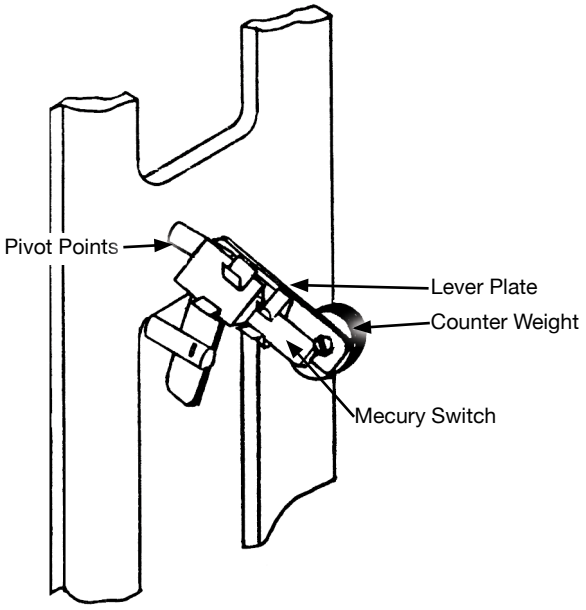

Duesenfeld Ex. 2030-012

V. ELECTRICAL INSTALLATION

WARNING: VERY HIGH VOLTAGE IS PRESENT. REMOVE POWER FROM THE UNIT BEFORE INSTALLING, REMOVING, OR MAKING ADJUSTMENTS

GENERAL SAFETY

When using electrical equipment, you should always follow basic safety precautions, including the following:

- The installation and wiring of this product must comply with all national, federal, state, municipal, and local codes that apply.
- Properly ground the enclosure to an adequate earth ground.
- Do not modify any factory wiring. Connections should only be made to the terminals described in this section.
- All connections to the unit must use conductors with an insulation rating of 300V minimum, rated for 221° F (105° C), a minimum flammability rating of VW-1, and be of appropriate gauge for the voltage and current required (see specifications).
- Do not allow moisture to enter the electronics enclosure. Conduit should slope downward from the unit housing. Install drip loops and seal conduit with silicone rubber product.

DISCONNECT REQUIREMENTS FOR PERMANENTLY INSTALLED EQUIPMENT

A dedicated disconnecting device (circuit breaker) must be provided for the proper installation of the unit. If independent circuits are used for power input and outputs, individual disconnects are required.

Disconnects must meet the following requirements:

- Located in close proximity to the device
- Easily accessible to the operator
- Appropriately marked as the disconnect for the device and associated circuit
- Sized appropriately to the requirements of the protected circuit (See specifications)

PROTECTIVE EARTH GROUND

To eliminate shock hazards in the unlikely event of an internal insulation breakdown, the unit is provided with a “protective earth” (⏚) lead which must be connected to earth ground. In addition, the input power ground lead must be connected to the “protective earth” (⏚) terminal provided. Wire sizes must be selected such that it can safely carry the sum total of all circuits’ maximum amperage.

WIRING

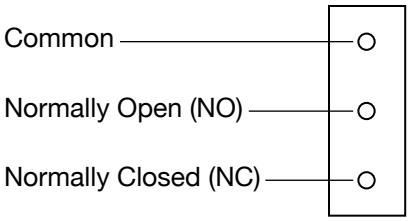

VI. MAINTENANCE

PREVENTIVE MAINTENANCE

Semi-annual or annual inspection of the diaphragm, vent and switch circuit is recommended.

RECOMMENDED SPARE PARTS

BANTAM BIN-DICATOR		
LAB110700	A-BB-3	Lever Arm Assembly
LAB121360	BB-2	Cover
LAB121410	BB-6	Aluminum Diaphragm Retaining Washer
LAB121420	BB-6A	Stainless Steel Diaphragm Retaining Washer
LAB121430	BB-9	Neoprene Diaphragm
LAB121510	BB-9H	Teflon®-Coated Neoprene Diaphragm
LAB121530	BB-15	Diaphragm Back Plate
LAB121580	BB-5	Brass Pivot Rod
LAB122138	BB-3	Brass Lever Arm
LAB130940	BB-7	Rubber Mounting Gasket
LAB130950	BB-7A	Rubber Cover Gasket
LAB130960	BB-8	Counterweight Segment, Lead, 1 oz
LAB130970		Micro Switch, 185° F (85° C), Marked BA-2RV-191-A2
LAB130980		Micro Switch, 250° F (121° C)
AUTO-BIN-DICATOR		
LAD110750	A-D-8A	Switch Assembly w/ Bracket, Cam, and Barriers; 185° F (85 C)
LAD110751	A-D-8B	Switch Assembly w/ Bracket, Cam, and Barriers; 250 F (121 C)
LAD110752	A-D-8C	00 Switch Assembly w/ Bracket, Cam, and Barriers; 800 F (427 C)
LAD121590	AB-4	Diaphragm Back Plate
LAD121600	AB-5	Aluminum Diaphragm Retaining Washer
LAD121610	AB-6	Stainless Steel Diaphragm
LAD121620	AB-6A	Neoprene Diaphragm
LAD122004	AB-5SS	Stainless Steel Diaphragm Retaining Washer
LAD131030	AB-8	Perimeter Springs (Behind Diaphragm Back Plate)
LAD131040	D-8A	Micro Switch Marked BA-2RB35-A2, 185° F (85° C)
LAD131050	D-8B	Micro Switch, 250° F (121° C)
LAD131060	D-8C	Micro Switch, 800° F (427° C)
LAD131090	AB-10	Mounting Gasket
LAG110800	G-6E	Cam Assembly
LAG121700	G-3	Cover
LAG121760	G-7A	Push Rod

Duesenfeld Ex. 2030-014

MODEL A		
LAA110550	A-115-A	Canvas Diaphragm Assembly
LAA110560	A-11	Fiberglass Diaphragm Assembly, 0.010 in. (0.254 mm)
LAA110570	A-115-C	Light Neoprene Diaphragm Assembly, 0.013 in. (0.330 mm)
LAA110580	A-115-D	Medium Neoprene Diaphragm Assembly, 0.025 in. (0.635 mm)
LAA110590	A-115-E	Heavy Neoprene Diaphragm Assembly
LAA110610	A-115-G	Heavy Silicone Diaphragm Assembly
LAA110630	A-115-J	Heavy Teflon®-Coated Fiberglass Diaphragm Assembly
LAA110670	A-AA18	(2) 119-A Switches Mounted in Brackets
LAA110790	A-116A	Mercury Switch (G-10Z) and Mounting Clip
LAA120980	AA-5A	Lever Plate (Micro/Mercury Switch)
LAA120990	AA-5B	Lever Plate (Micro Switch) Model, Underslope Mounting
LAA121010	AA-9A	Cover for Explosionproof Model A Bin-Dicator
LAA121040	AA-10	Steel Diaphragm Retaining Washer
LAA121050	AA-10A	Stainless Steel Diaphragm Retaining Washer
LAA121090	AA-13B	Single/Double Micro Switch Bracket, Aluminum (2 Required)
LAA121110	AA-13D	High Temperature Micro Switch Bracket (1 Required)
LAA121130	AA-14	Steel Diaphragm Back Plate
LAA122120	AA-2	Brass Pivot Rod
LAA122121	AA-3	Brass Diaphragm Push Rod
LAA130591	AA-9	General Purpose Cover, Plastic, Model A
LAA130592		General Purpose Cover, Minlon®, Model A
LAA130730	AA-7	Counterweight Segment, Lead, 1 oz
LAA130770	AA-11	Cover Mounting Gasket
LAA130780	AA-11	Klinger Mounting Gasket for High Temperature Switch
LAA130800	117	Mercury Switch (G-10Z) Mounting Clip
LAA130810	118	2-Pole Terminal Block
LAA130820	119-A	Micro Switch, 185° F (85° C)
LAA130830	119-B	Micro Switch, 250° F (121° C)
LAA130840	119-C	00 Micro Switch, 800° F (427° C)
LAA130850	122-A	0 EX-AR Explosionproof Micro Switch, SP/DT, 185° F (85° C)
LAA130860	122-B	0 EX-DAR Explosionproof Micro Switch, DP/DT, 185° F (85° C)
LUA030820	4107	Brass External Cap Nut for AA-3 Brass Rod
LUA030830	4107A	Stainless Steel External Cap Nut for AA-3 Brass Rod

Duesenfeld Ex. 2030-015

VI. DIMENSIONAL DRAWINGS

Bantam Bin-Dicator

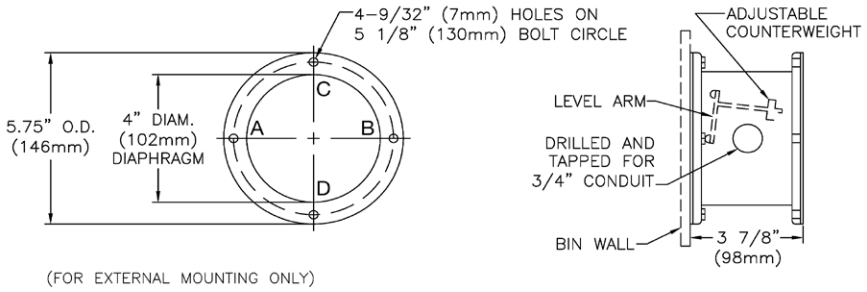

Auto-Bin-Dicator

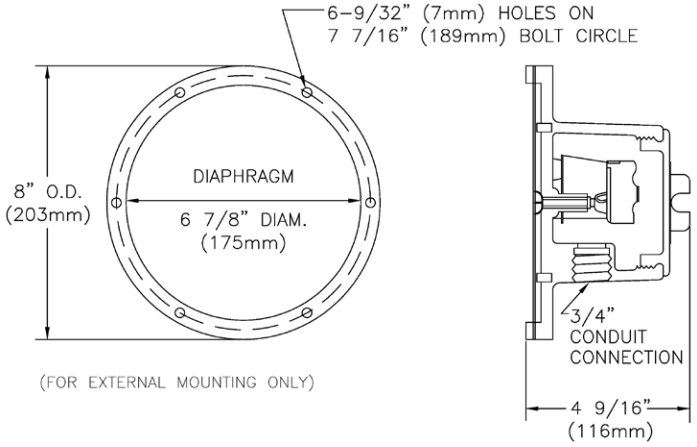

Model 'A'

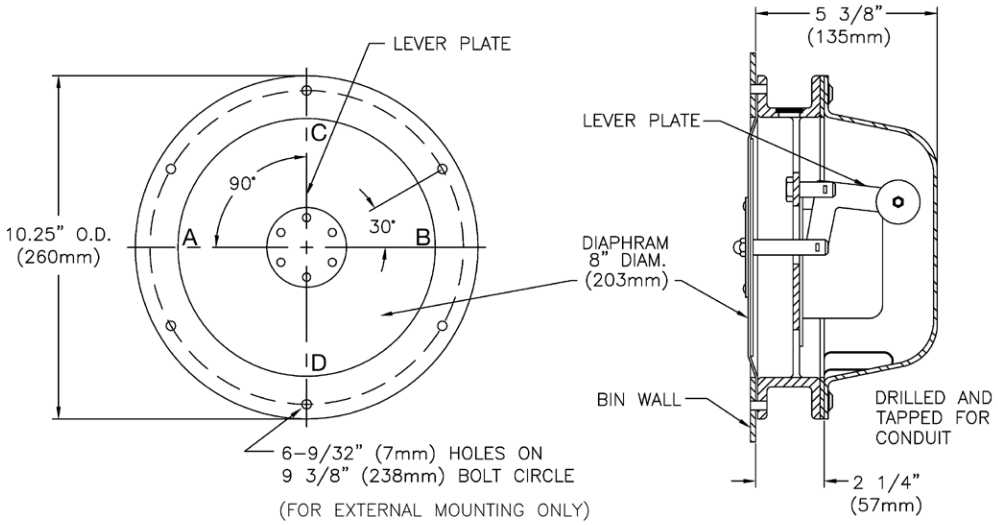

Duesenfeld Ex. 2030-016

Notes:

Duesenfeld Ex. 2030-017

Notes:

Duesenfeld Ex. 2030-018

Duesenfeld Ex. 2030-019

150 Venture Boulevard
Spartanburg, SC 29306
Tel: (800) 778-9242
Fax: (864) 574-8063
sales@bindicator.com
www.bindicator.com

2013 All rights reserved.
All data subject to change without notice.

LAA180313 Rev. B