Automotive airbag technology past, present and future

Adnan Shaout and Charles A. Mallon
Department of Electrical and Computer Engineering, University of Michigan-Dearborn, Dearborn, Michigan 48128, USA
Fax: 313593-9967 E-mail: shaout@umdsun2.umd.umich.edu

Abstract: Automotive airbag technology was studied from the development of the first airbag to the present driver and passenger side airbag systems as well as the development of the technology that will bring the current automotive airbag system into the century. Today's airbag system is a passive supplemental restraint that is used to cushion the driver or passenger during frontal impacts. Tomorrow's airbag system will be a 'smart' adaptive restraint system that will tailor the airbag to the restraint needs of the occupants as well as performing occupant out-of position sensing and child seat sensing to disable the airbag when a child seat is present.

Keywords: airbags, adaptive restraint, 'smart', out-of position, adaptive restraint.

Reference to this article should be made as follows: Shaout, A. and Mallon, C.A. (2000) 'Automotive airbag technology past, present and future', *Int. J. of Computer Applications in Technology*, Vol. 13, Nos. 3/4/5, pp. 159–171.

1 INTRODUCTION

The Federal government is requiring airbag systems to be installed in more vehicles. Beginning with the '98 model year, every car sold in America must have dual airbags. Light trucks have to meet the standard in the '99 model year [27]. At the same time the American public is being bombarded by the number of deaths caused by airbags. Thirteen deaths have been confirmed in 1997, a rate down modestly from the pace of 1996, when 29 deaths were recorded for the full year. The total since 1990 is up to 77 – 43 children, 31 drivers and three adult passengers [3].

The general public is so concerned that they are starting to disable their automotive airbags, hoping that they will be safer without them. Even though a recent study of about 18,000 driver crash deaths during 1985 to 1992 found 24% fewer fatalities than expected in front and front-angle crashes (10 to 2 o'clock) of airbag equipped cars [24].

The U.S. government required that the manufactures of airbag systems should start the development of a 'smart' restraint system for automobiles that should be available at the beginning of the next century. In the mean time the government is allowing the installation of passenger side airbag disable switches that will allow the driver to disable the passenger side airbag when a child seat is in the front passenger seat.

The problem posed by an unrestrained occupant was the original impetus for adapting the self-inflating airbag (an idea that began as a way to protect the occupants of the early-generation space shuttles) to a car's interior. The airbag is a tough, self-inflating cushion that can expand quickly enough to meet the mass of the body halfway, then decelerate that body within survival parameters [41]. By definition, a true, 'smart' airbag is one that can detect the size and position of the occupant it is designed to protect, as well as the severity of the crash that deploys it. Using that information it tailors inflation force to provide maximum protection under those conditions. If it detects the presence of a child seat, it will be smart enough not to deploy at all. This is a far cry from today's bags which, by U.S. law, deploy with enough energy to protect an unbelted, 160-lbs, 5-ft, 9-in passenger in a 30 mph frontal crash. It also contrasts with European-regulation bags, which are smaller, deploy with 30% less force and are meant to protect a belted occupant. There have been no airbag-related deaths in Europe to date [1, 41].

This paper is organized into six sections. In the next section we will present the airbag system of the past. The third section describes the present airbag system. The fourth section presents the airbag strategy that will

CMT Exhibit 1018, Page 1 of 13
CMT v. Sfara - IPR2024-00952

be used in the future. The fifth section will cover the airbag system description. The sixth section will present the technology of the airbag system including: the seat belts, airbag, sensors and inflators. Finally the last section gives the summary and highlights the future of the improved system.

2 THE AIRBAGS OF THE PAST

The air bag's introduction about 20 years ago was facilitated by the development of a pyrotechnic device which produces a nontoxic gas within milliseconds after impact. The desire to improve the air bag by reducing its size and weight, and by using more benign materials and recycling methods, has resulted in a continuing effort to find new inflator technologies [7].

In 1984 air bags with properly worn seat belts were estimated to be a slightly more effective restraint system than safety belts alone for reducing overall risk of fatalities and injuries, according to a study by the US National Highway Traffic Safety Administration (NHTSA) [14]. When frontal air bag systems were first introduced, crash sensing was usually implemented by two or more electromechanical sensors located in the front of the vehicle. These sensors were mechanically trimmed to discriminate between must-deploy and must-not-deploy events. They contained a simple switch which, in case of a must-deploy event, closed the electronic circuit to supply ignition current to the air bag module's firing squib [12].

The typical automotive airbag system of the past was a passive system which relied on three mechanical sensors, located at specific vehicle locations within the crush zone and passenger compartment (Figures 1 and 2). These systems were costly because they were designed to make all the air bag system crash sensing and discrimination decisions, carry the current to the inflator for air bag deployment, and operate over the vehicle's life in the environmentally harsh engine compartment. The passive systems provided good crash sensing performance; however, there were reliability concerns due to the large amounts of vehicle wiring and connections required to interlink the three external sensors with each other and also with the air bag modules and the passive central air bag controller [22, 53].

Figure 1 *Three mechanical sensor system [62].*

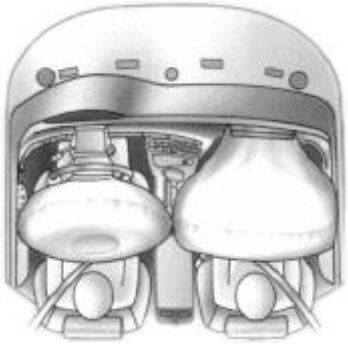

Figure 2 *Driver and passenger airbags [63].*

3 THE PRESENT AIRBAG SYSTEM

With improved car structures and the availability of cost-effective electronic acceleration sensors and powerful microcontrollers, single-point sensing systems were introduced that did not require the use of front-mounted remote discriminating sensors. Instead, the deceleration of the vehicle during a crash was measured by an accelerometer and evaluated by algorithms executed by the microcontroller [12]. This deceleration information was used by the algorithm to determine the severity of the crash. The level of frontal crash severity for an airbag deployment is called the 'deployment threshold.' In the Ford design, for example, air bags are designed to deploy at impact speeds over approximately 14 mph in a head-on collision into a solid barrier under normal ambient conditions [14].

There are more than 15 million vehicles equipped with driver and passenger airbags [8]. Most of the current airbag systems are of the 'deployment threshold' configuration which will account for only one level of bag deployment (100%) at one threshold of deceleration. A summary of the Tier-1 suppliers and their airbag components can be found in Table 1 and Table 2 [27].

The airbags of the past were required to deploy after meeting or exceeding a 'deployment threshold'. The airbags of the present were designed to tailor the system slightly based solely on the magnitude and duration of the crash pulse. Slow speed events in which an air bag is not required are long in duration and relatively low in magnitude. The higher speed events, in which an air bag may be required, usually occur over a much shorter duration. The main pulse in which the sensor responds could be approximately 10 to 30 milliseconds in duration [16].

CMT Exhibit 1018, Page 2 of 13
CMT v. Sfara - IPR2024-00952

Table 1 *Tier-1 electronic suppliers* [27].

Supplier	*Standard diagnostic modules*	*Silicon accelerometers*	*Electronic single point sensing modules*	*Occupant sensing systems*	*Inflators*
Bosch		X	X	X	
Delco	X	X	X	X	
Ford ACD	X	X	X	X	
Mitsubishi Electric	X		X		
NEC	X		X	X	
Nippondenso	X	X	X	X	
Philips	X				
Siemens	X		X	X	
Temic	X	X	X	X	X

X = interfaced with multipoint electromechanical collision sensors.

The active system uses the central air bag controller (SDM) within the passenger compartment to perform crash sensing and discrimination; however, the system does require a separate mechanical sensor located within the truck's crush zone to provide optimal crash sensing and discrimination. The new air bag controller also handles and controls the current necessary to initiate air bag deployment. The external mechanical sensor is a lower cost unit, compared with the previous mechanical sensor designs, because it no longer needs to carry air bag deployment current or make the primary crash sensing and discrimination decisions [22].

4 THE AIRBAGS OF THE FUTURE

The active system provides equivalent sensing performance as the passive system, but at a lower cost and increased system reliability because of fewer components, less wiring, and fewer connections. For example, the payout of the seat belt webbing can be adjusted according to the weight, seat angle, seat position, and distance from the instrument panel or steering wheel. Inflators and special venting modules under development by TRW could adjust airbag deployment timing, force, and volume based on the occupant's size, seating position, and crash forces [6]. This system consists of a single crush zone sensor which senses all crashes to the front of the vehicle; occupant position sensors for both the driver and front seat passenger; an electronic circuit which diagnoses that the system is operational and combines the inputs from the crush zone sensor and the occupant position sensor; and a long dwell mechanical arming/safing sensor [15]. The first smart systems will arrive in phases in the mid '98 model year. Phase one will likely include a weight sensor, variable crash severity sensor, seat buckle sensor, dual/variable output inflator and rear-facing child seat detection. Phase two would add complete occupant sensing to determine exact position, weight, and presence of a child seat [1].

Some automotive manufactures believe that the 'smart' airbag systems will be available in phases. The first phase starting in 1999, features a multi-threshold crash sensor, dual-chamber inflator and seat belt sensor. The result is the ability to expand the concept of belted versus unbelted thresholds. In other words, the bag would fire for a belted occupant at perhaps 17–20 mph, rather than at 12 mph. In addition, the dual-chamber inflator allows for a much broader firing pattern, from zero, to a split of 70/30 (this could vary on the Original Equipment Manufacture (OEM) specification), or a full bore 100% release [2]. At the turn of the century, phase two should arrive with distributed pressure cells in the seat for the sensing, and a dashed mounted infrared sensor for the occupant detection [2]. The system would use a ranging algorithm to determine the occupant presence, position and size, along with an accelerometer, and a seat belt sensor to adjust deployment.

The development of the first side airbag to protect the head and neck will be available in BMW's new 7 series large luxury sedans. The occupants will benefit from the industry's first system to protect the head and neck in side impacts. In a side crash, the inflatable tubular structure, concealed behind the headliner and anchored inside the windshield pillar and roof above the rear door, deploys to protect the driver and front seat passenger [20]. It pops out of the headliner to form a soft, straight tube, 5.1 inches in diameter and stretched in a straight line from the lower windshield pillar to the rear door roof. It stays inflated for approximately 6 seconds for longer protection [20].

Automakers and suppliers are developing side-impact air bags that deploy from the seat cushion, seat back, door, and roof rail/B-pillar (Figure 3) [21].

In addition to frontal air bags, other restraint devices are used or under development (Table 3), increasing the number of total occupant restraint systems [12]. The airbag electronic system complexity is determined by the number of external inputs sensed. Table 4 shows the variety of possible sensor and status signals the air bag electronics systems must evaluate [12].

CMT Exhibit 1018, Page 3 of 13
CMT v. Sfara - IPR2024-00952

Table 2 *Tier-1 system suppliers (including electronics where applicable)* [27].

Supplier	*Electro-mech. collision sensors*	*Standard diagnostic modules*	*Silicon accelero-meters*	*Electronic single point sensing modules*	*Occupant sensing systems*	*Inflators*	*Cushions*	*Complete modules*	*Seat belt systems*	*Steering wheels*
Allied-Signal					ⓐ	X	X	X	X	
Autoliv			X	X	X	X	X	X	X	X
Breed	X	X	X	X	X	X	X	X		X
Delphi								X	ⓐ	X
Magna						X		X	ⓐ	X
Morton					X	X	X			
Takata	X	X			X	X	X	X	X	
TRW	X	X		X	X	X	X	X	X	X

X = manufactured by supplier ⓐ = sold to customers, but not manufactured by supplier.

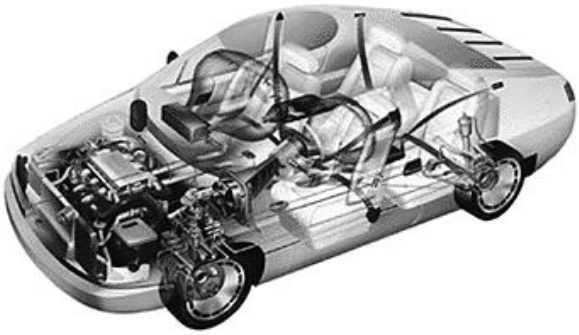

Figure 3 *Future safety system cutaway [64].*

5 THE AIRBAG SYSTEM DESCRIPTION

Air bags are not designed to deploy in every crash. The air bag system is not designed to deploy in side, rear, rollover or lower-severity frontal crashes [14]. The airbag restraint system consists of sensors to determine the severity of the crash as well as the position of occupants and other significant information about the passenger compartment environment. A central module will receive the sensory inputs and make a determination as to whether or not the airbags need to be deployed. The module also contains the electronics necessary to fire the squibs and diagnose if there is a squib failure. Inflator diagnostics are performed upon every ignition sequence of the automobile. The airbag modules are located in the steering wheel and the passenger side dash board. When the airbags are required, the central module will transmit a current that will ignite a small pyrotechnic device called a squib in the airbag module. The small ignition will ignite pellets of sodium azide which when burned will produce Nitrogen gas to fill the deflated bag that is packed in the module.

During a crash up to the time that a sensor must determine whether or not to deploy an airbag, the vehicle can be divided into two main parts: the crush zone is the part of the car that is decelerating relative to the rest of the vehicle and the non-crush zone is the remainder of the vehicle that is still traveling at a constant velocity. This is called the two pulse theory [15]. If the system were to incorporate just a single acceleration sensor in the passenger compartment, the crash pulse would be filtered prior to receiving it by the sensor. There would be insufficient information in the non-crush zone of the passenger compartment to permit a sensor to sense all crashes in time. Therefore, sensors mounted in the crush zone are required. This is independent of the vehicle structure and, therefore, changes to the vehicle structure will not 'fix' the problem [15].

The purpose of a crash sensor system is to sense that a crash is in progress which is of sufficient severity to require the deployment of the airbag. It should do so before the occupant has moved to where he/she is going

CMT Exhibit 1018, Page 4 of 13
CMT v. Sfara - IPR2024-00952

Table 3 *Restraint devices* [27].

Devices	*Driver-seat*	*Front-seat passenger*	*Rear-seat passenger*	*No of devices per vehicle*
Front air bag	X	X		2
Belt pretensioner	X	X	X	4(5)
Side air bag	X	X	X	4
Deployable knee bolster	X	X		2
Head-protection air bag	X	X		2

Table 4 *Sensor and status signals* [27].

Signals	*Driver-seat*	*Front-seat*	*Rear-seat*	*No of devices per vehicle*
Seat belt buckle switch	X	X	X	4(5)
Seat occupied		X	X	3
Rearward facing child seat		X		1
Out-of-position	X	X		2
Weight	X	X		2
Side-impact sensing status	X	X		2
Inflator pressure	X	X		2
Inflator temperature	X	X		2

to interact with the deploying airbag and certainly it must do so before he/she has already impacted with the interior of the vehicle [15]. The pyrotechnic inflator produces gas which begins to inflate the folded airbag. As the gas pressure rapidly increases, the airbag punches through the module door. This occurs about 5–10 milliseconds after the airbag is triggered [36].

The airbag system is required to protect an unrestrained adult, but the system works best when lap-shoulder belts are worn and the airbag is allowed to work as a supplemental restraint.

Seat belts, airbags and other safety devices fitted to motor vehicles have resulted in a reduction of fatalities. However, these safety devices are also causing injuries and fatalities directly. Motor vehicle crush zones are a fundamental safety principle that could be used to prevent injury and fatality, yet are overlooked by most automotive manufacturers [32].

Unrestrained occupants are susceptible to air bag induced injuries. The injuries to unrestrained occupants are a result of the occupants moving 'out of position' and being struck by the inflating air bag during low speed collisions. To minimize the risk of deployment induced injuries, air bags should be designed to deploy faster when seat belts are not worn. This allows for complete inflation before the occupant moves substantially forward in the seat [33].

Today's airbag systems are tested using three types of crash test dummies Aside from the 50%-HYBRID III dummy representing an occupant of average size and weight, only the two extremes of the occupants −5% female dummy and 95% male dummy are used [38]. The overall confidence of the systems ability to protect all aspects of the population, would require further testing with more dummies. But at a cost of over $100,000 per crash test per dummy per car, it becomes cost prohibitive to generate all of these tests. The rest of the information needed for the different individuals must be extrapolated from the other three tests.

6 TECHNOLOGY OF THE AIRBAG SYSTEM

This section will categorize the components that are required to make up an airbag restraint system. This section will include the components from the past, present and future airbag systems that are under development.

6.1 Seat belts

Even though seat belts may not seem like they are part of an airbag system, they may be the most important component. The seat belt is important, because it keeps the driver properly positioned behind the wheel, which not only allows the driver to maintain control of the vehicle after a collision, but also puts the driver in the best position for airbag deployment. Stopping the forward momentum of the occupants is the ultimate goal of the restraint system (Figure 4). The seat belt, obviously plays an essential role in achieving this. During a 40-G stop, a 200 lbs man suddenly weights four tons. His head alone is being pushed forward with a 400-lbs force at the top of his spine [41].

The air bag system can be effective as well in mitigating sudden belt loading. By allowing the bag system to provide significant restraint prior to high belt loads, impact loading of the belt can be avoided.

Figure 4 *Control of occupants position [64].*

However, such a bag and belt system may lead to very low excursions, not using interior space for acceleration reduction. Further, bag systems which load prior to the belt system are generally avoided because of concerns for forward-seated occupants [9].

The seat belt was designed to slow down the forward momentum of the occupants by absorbing energy into the frame of the car while the occupant is traveling a short distance. The webbing of the seat belt is woven in such a way as to stretch under significant load. One of the main problems with the air bag system is that it is an added energy source in the crash event. This problem is characterized by the transfer of momentum from the bag to the occupant at a time when belt forces are already significant, thereby aggravating injury criteria (usually chest acceleration and compression) [9].

The addition of pretensioning devices have been shown to be effective in coupling the occupant to the vehicle and reducing the free-form velocity that is allowed to occur, reducing belt-impact loading at the end of chest travel and sudden head deceleration [9]. The pretensioner is another explosive device which is controlled by the central airbag module. When the module sends a current pulse to the pretensioner, the resultant explosion pulls the lap portion of the belt towards the floor pan of the vehicle. This action results in the occupant being pulled firmly into their seat. By pulling the occupant firmly to the seat, the deceleration loads that become coupled to the occupant will be reduced as well as the possibility of whiplash.

A rather new seat belt from AirBelt is a system which stores gas under high pressure and requires no ignition to inflate the bag. When a crash is detected, the gas is released by a valve [4, 44, 45]. One last note about the use of seat belt, is that facial injuries are just as likely to occur to belted or unbelted drivers. This is probably due to the fact that the deploying airbag contacts the driver's face before the lap-shoulder belt has its full effect in limiting the driver's forward movement [36].

6.2 Sensors

Several sensors will be covered in this section, including accelerometers, crush sensors, weight sensors, occupant detection sensors. With the recent attention on fatalities due to airbag deployment, increased emphasis has been placed on passenger sensing. In particular, weight has been deemed the appropriate parameter for disabling the airbag. Several approaches have been, and are being, proposed [8, 11, 17, 18, 24, 28, 55]. Without getting too specific, several problems exist with the current and proposed approaches including: Cost, Implementation without disrupting the seat, Temperature compensation, Robustness to variability in seat occupancy scenarios, and Area coverage [37].

The accelerometer sensor comes in many varieties including a mechanical, electro-mechanical and silicon micromachined version. Originally, airbag systems utilized multiple mechanical-point sensing systems [18].

Mechanical-type sensors have the functions of crash detection, crash recognition and electrical switching for the airbag deployment. However, the mechanical type is poor in applicability to various types of crashes [18]. Present sensors, whether mechanical or electronic, make use of only one bit of information, the overall size of the signal [17]. The mechanical sensors are unable to process any of the information about the crash, they are only capable of completing an electrical circuit at a predetermined threshold of deceleration. The most common electromechanical crash sensor is the ball-in-tube type, which generally has a magnetic restraint, although sometimes a spring is used (Figure 6). When it is exposed to a specified threshold deceleration or velocity change, a steel ball (sensing mass) travels a certain distance, whereupon it bridges an electrical contact and closes a circuit, initiating inflation of the bag [24].

Recently, single point electronic sensing systems using an electronic accelerometer have been developed and put to practical use in order to overcome the drawbacks of the mechanical sensors (Figure 5) [18]. In the single point electronic sensing system, the detection, recognition and airbag deployment triggering functions are performed separately [18, 59, 61].

The semiconductor accelerometer converts the mechanical displacement of its small beams into an electrical signal using the piezo-resistance effect [18]. Although the performance of most of today's airbag crash sensor systems is excellent, it is achieved by using multiple sensors located remotely from the passenger compartment. Those systems which use single sensors in the passenger compartment sometimes fail to actuate when needed or are too slow to provide optimum occupant protection [17]. By virtue of the relatively rearward location of sensors in the passenger compartment, the acceleration signals arrive relatively late in the crash. These signals are distorted, filtered and attenuated by the intervening body structure. Fortunately, there is information available in the signal early-on even before it becomes large [17].

It has been determined that the distributed systems provide good crash discrimination, but they are costly

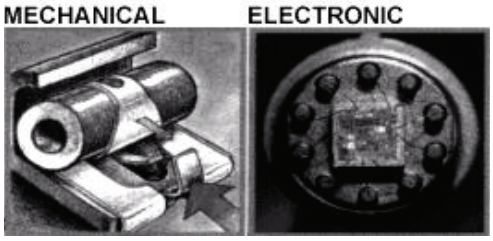

Figure 5 *Mechanical and electrical accelerometers [62].*

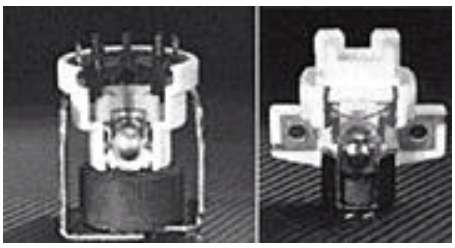

Figure 6 *Ball-in-tube crash sensor [64].*

because of the multiple sensors and installation and wiring [24]. Single point passenger compartment sensors have access to less information about the impact by the time a deployment decision must be made than the sensors located up front in the crush zone [24, 55]. This means that the car structure must be designed to reliably transmit the crash pulse to the sensor.

A related airbag industry trend is the move toward silicon micromachined accelerometers in a single-point configuration [24, 28, 29]. The airbag sensors are designed to respond to longitudinal decelerations of the vehicle [36].

For side impact detection, accelerometers are required that can respond faster than the usual mechanical sensor. Since there is very little space between the occupant and the outside surface of the door the sensor must respond very quickly to the side collision. Whereas a multipoint airbag system has 20 milliseconds to respond, and a single-point system has about 10 ms, a side-impact airbag has approximately 4 ms [24, 46]. Side impact detection is performed by a Siemens absolute pressure located in the door panel. In comparing the behavior of its (Siemens) absolute pressure sensor with the traditional accelerometer sensing concepts for vehicle impact detection and air bag deployment, company engineers claim the pressure sensor is up to three times faster, firing the air bag less than 5 ms after impact [21]. The pressure sensor is mounted inside the vehicle door cavity, where it monitors dynamic pressure changes to the air within the cavity. The micromachined unit is made of two silicon layers with an evacuated cavity between them which provides pressure references [21].

Weight sensors are used to determine if there is a passenger occupying the seat and it is also used to categorize the driver of the vehicle to determine how the airbag should deploy for that driver. There are many different types of weight sensors being considered. Breed believes the quick-fix answer is to install a weight-activated cut-off switch under the four hard-points where the seat is mounted to the track. That would buy time until the smart bags are ready [1].

Since January 1996, BMW has had a weight-based occupant detection system as a standard item across its vehicle line. The sensor which has a threshold of 26 lbs is from Interlink of Luxemburg [8]. Sensors in the seats detect the presence of either a passenger or a child seat. The airbags are disabled unless the sensor registers more than 26.4 lbs in the seat [40, 47].

The system uses as many as 12 sensors in the seat to determine where the weight is being applied. This information is processed to determine whether there is an occupant in the seat, and whether there is a rear-facing infant seat [8]. The side and front bag system also have a new (weight) sensor system from iEE Automotive USA to disable them if the seat is unoccupied. The bags deploy if the seat registers 26.4 lbs or more on the seat (Figure 7). The sensors do not disable the bags if a child seat is present, but Audi expects to add that feature next year [26].

Occupant detection sensors come in a variety of choices, including infrared [6, 8], ultrasonic [5, 6] and capacitive sensors [6, 40]. With the increasing number of airbags being used in vehicles there has been a corresponding increase in the number of occupants injured or even killed due to airbag deployment, particularly under out-of-position conditions [39]. The occupant detection sensors are used to determine if there is an out--of-position occupant in one of the front seats. The airbag module uses this information to make a determination if the bag needs to be deployed in any given crash. But the main goal of the airbag module development must be to balance the out-of-position risks with the overall occupant protection performance to reach the highest biomechanical quality [39, 53].

TRW researched infrared, video, and radar occupant-sensing technologies, but decided on

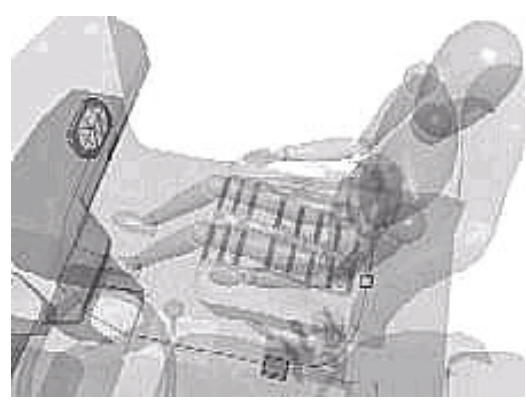

Figure 7 *Occupant weight sensor [64].*

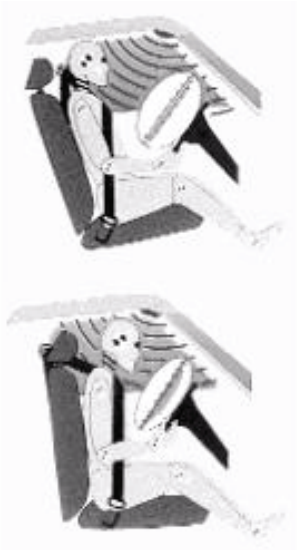

Figure 8 *Ultrasonic occupant detection system [66].*

ultrasonic measurement because of its robustness (Figure 8) [6]. Delco Electronics is developing three approaches to occupant detection. The first use two infrared sensors, one above and in front of the occupants and the second above and slightly behind. Position sensing is used to suppress or tailor the bag inflation as a function of how close the occupant is to the airbag [8].

Ultrasonic sensors can be used to capture a 'picture' of the interior of the vehicle using sound waves. The ultrasonic system operates by transmitting a burst of high frequency sound waves toward the occupant and measures the time that it takes for the waves to travel to the occupant and return. The system is somewhat limited by the time it takes for sound to travel the distance to and from the occupant which limits the frequency that the occupant's position can be measured to about once every few milliseconds [15]. In combination with the sophisticated weight sensors, four ultrasonic transducers placed around the passenger front seat build a three-dimensional picture of any object or person in the seat [5].

An alternative system uses infrared lasers to send a modulated light beam to the occupant. The reflected light is received by an appropriate receiver and the phases of the transmitted and received modulated waves are compared to determine the distance of the occupant. This system has the advantage that the position of the occupant can be determined more frequently, but the system requires sophisticated optics and electronics and thus is more expensive [15].

The capacitive sensor system would be mounted in the steering wheel for the driver side detection and for the passenger side it would be mounted between the headliner and the vehicle roof. By mounting the Occupant Sensing System (OSS) in the roof line, it is hidden from passengers and is said to be unaffected by outside stimulants as hats, wet clothing, sunglasses, or the environment. OSS capacitive sensors are affected by objects having a different dielectric constant than air. Positioning an occupant's head in the capacitive field has a significant effect on the detector since a human is approximately 80 times more conductive than air. Since most objects are significantly less conductive than a human, the system does not detect them and the airbag is not deployed [11].

By combining ultrasonic sensors and infrared sensors in one systems the module will be able to overcome the short comings of both technologies. A total of 450,000 different positions of the front-seat occupant can be recognized by the sensors, including special cases such as an occupant holding a book or a newspaper. The system can suppress airbag deployment if the occupant comes too close to the dashboard, if a child is in the front seat, or if the seat is empty [5].

Child seat sensing is becoming a priority. Of the 32 deaths of small children reported in the NHTSA study, nine were caused by rear-facing infant seats positioned directly on the airbag when it deployed. Another common cause of death was an unbelted child—including some children who were strapped in child seats that were not secured to the car—thrown onto the airbag by hard braking just prior to the crash [41]. When a child seat is detected, the system will automatically deactivate the passenger side airbag. Autoliv, which supplies safety systems to almost all major carmakers, says its Smart airbag system is able to detect if a reverse facing child seat is in the front seat or if a passenger is seated near the instrument panel [5, 47]. A transponder-based tagging approach, provides for rear-facing infant seat position airbag suppression [8]. The sensor transmits a radio signal and turns off the bags in conjunction with a transponder in the base of the child seat [40].

Vehicle safety sensing applications have increased dramatically with the increased use of airbag technology. Of the various vehicle safety sensing applications, there are three areas which have generally produced inadequate performance, they are: (1) single point crash detection for frame/body vehicles; (2) side impact detection and; (3) occupant seat weight sensing [37].

Temic Automotive's intelligent seat occupancy system also uses infrared sensors, but in the vehicle headliner, and a fuzzy logic processor calculates the contours from sensor information and compares data against the profile of the passenger seat. If the system 'identifies' the seat as being empty, it blocks the airbag triggering process. It also will detect the presence of a rear-facing child seat, and can determine the difference between a person and an object such as a briefcase. The fuzzy logic is self-learning, which allows it to work with every seat position without the need for readjustment. The system is compatible with other manufacturers' airbag triggering devices [6].

CMT Exhibit 1018, Page 8 of 13
CMT v. Sfara - IPR2024-00952

6.3 Airbags

In order for the airbag to be fully deployed before any significant forward excursion of the driver's body occurs, airbags must be fully inflated in 40–50 ms (Figures 9 and 10). These high inflation rates can result in airbag initial fabric velocities of 320 km/h or more [36].

About 47% of deaths in side impacts are due to head injury, which occurs when the occupant's head strikes the hood of the intruding vehicle, or the window sill or B-pillar of the occupant's car [21]. The side airbags in front consist of an inflatable restraint built into the outboard surface of each front seat's backrest bolster. They're designed to effectively increase crush space between the outer surface of the door and the front-seat occupants. Front seat-belt pretensioners are triggered during any crash that activates the dual front airbags. Automatically removing slack helps position the occupant for maximum airbag protection [20, 49].

'Smart' passive restraints that tailor bag deployment to the crash severity, seat belt use, the body size of the occupant, and the proximity of an occupant to the airbag systems just prior to deployment [24, 54].

There are several types of new airbags that are making their way to the market place: seat cushion bags, knee bolster bags and roof bags for head protection. The seat cushion restraint system comprises a front seat cushion that lifts the lower legs from the floor to eliminate the possibility of bracing and minimizing interaction with the intruding structure. At the same time, it provides a restraint for the pelvis, eliminating the need for a full knee bolster [25, 51]. The knee bolster is a panel deployed by a small air bag. It protects the occupant's knees and provides additional benefits for the head and chest in a frontal impact by keeping the occupant in the proper position to receive the maximum protection from the vehicle's conventional air bag [10].

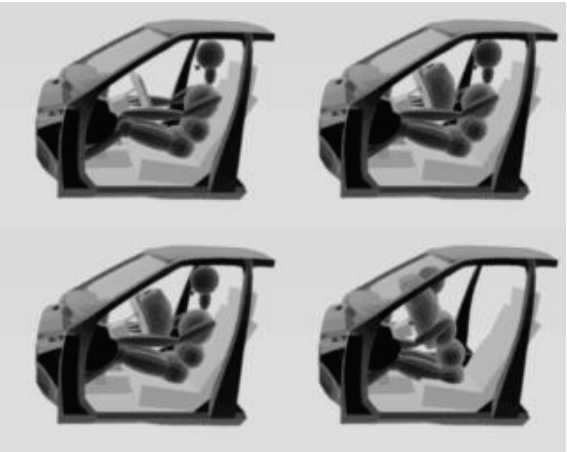

Figure 9 *Airbag deployment sequence [62].*

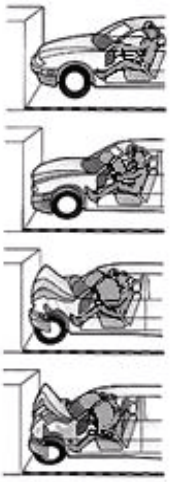

Figure 10 *Airbag deployment sequence [63].*

Since a fully inflated driver side airbag is about 7 inches thick, measured from front to back, the driver who is driving closer than 7 inches from the steering wheel will interact with the deploying airbag and the airbag probably should not be deployed at all [15]. In the present system, which does not disable the deployment of the airbag, the firing of the airbag would add energy to the decelerating occupant before the seat belt is able to become fully loaded. This would result in causing more injury to the occupant rather than preventing injury. To diminish the stress on the body, the bag accomplishes two objectives: It distributes the load broadly across its surface and absorbs energy as it vents gas and collapses [41, 56].

An open vehicle architecture presents itself with a unique problem. The large open space of the open architecture provides a lot of room to allow the occupants to decelerate, but there is not much interior surface area to support a standard airbag upon deployment. An open vehicle architecture can be achieved by adding a knee cushion to the airbag system. However, a separate knee cushion adds considerable cost and complexity to the system. A low cost effective solution can be achieved by incorporating the knee cushion into a low mounted passenger air bag (LMPAB) system. The LMPAB incorporates the upper torso cushion and the knee bag chamber into a single cushion assembly. The LMPAB system provides greater styling flexibility and interior space while maintaining the safety of more conventional airbag systems [42, 50].

The 'smart' restraint uses all of the information available about the crash to insure that the restraint performance is optimized (tailored) for each event, with bag firing decision, the firing time, the amount and the rate of inflation determined by the nature and position of the occupant, and the severity of the crash. In some cases each airbag could inflate twice, if multiple impacts occur [8].

CMT Exhibit 1018, Page 9 of 13
CMT v. Sfara - IPR2024-00952

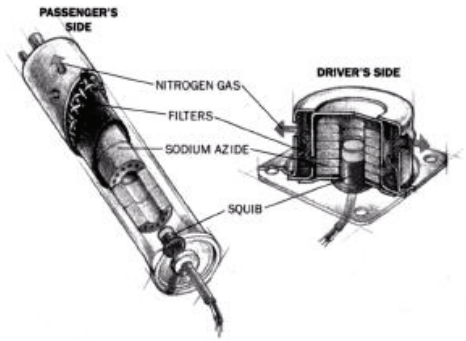

Figure 11 *Passenger and driver side airbag inflators [62].*

6.4 Inflators

Most pyrotechnic inflators are aluminum-encased units that contain an ignitor (squib), gas-generant pellets or wafers of sodium azide propellant, and filters to screen out combustion products (Figure 11) [4, 7, 24]. But use of such systems has peaked because automakers are looking for cleaner, more flexible systems, such as a helium gas inflator [4].

Sodium azide propellant produces a breathable gas, but it has some negative aspects. It is toxic if ingested, contact of an occupant's skin with a water/azide mixture tends to lower blood pressure, and if a water-azide mixture contacts metals, particularly copper, it can form primary explosives [7, 50].

Owing to the difficulties of handling sensitive pyrotechnic material, the Hybrid inflators were developed which store pressurized gas and a small amount of pyrotechnics [24, 48]. The propellant in a hybrid inflator triggers opening of a pressure vessel, and heats the escaping gas mixture. In contrast to the strictly pyrotechnic inflators, which become very hot, hybrid inflators are only warm to the touch following deployment [7].

Hybrid inflators can also be produced which are capable of deploying two stages of the airbag separately or simultaneously. Allied-Signal is working on a dual-level hybrid airbag system that can deploy in two ways depending on the severity of the impact. For incidents in which the effective barrier speed is under 23 miles per hour (about 75% of all crashes), the dual-level hybrid inflates the airbag to a lower pressure. For more severe crashes, a firmer faster bag deployment is instituted [24, 48, 52].

Side impact sensors are becoming popular because manufactures have determined that the side-impact collision causes 20% of driver fatalities, second only to frontal impacts [24, 46, 51]. The side impact airbags should be the next big push in automotive restraints since it is second only to frontal crashes for causing injuries to occupants. The side impact airbags can either be mount in the door panel (Figure 12) or to the driver and passenger seat frames (Figure 13).

Figure 12 *Side airbag in door panels [64].*

Figure 13 *Side airbags in seat frames [64].*

Siemens Automotive created a side impact sensor which detects air pressure. Changes in pressure in the door cavity lead by the side impact collision exert pressure changes on the sensor. Resistors incorporated in the second layer provide the pressure-change information to a microcontroller. These side impact sensors are able to respond to the crash impact in about 4 ms [57, 58].

Head restraints could reduce the amount of trauma caused to the head/brain. In the US, rear impacts account for more than 25% of all automobile-related injuries. Some of those injuries are caused to the head and neck by violent forward vehicle acceleration. Support given by head restraints is an obvious aid towards prevention on this type of injury, but for it to be effective, a front passenger would effectively always need to travel with the back of the head against the restraint [23]. The head restraint could come in the form of a movable head rest that would come up and toward the driver or passengers head due to momentum during the crash, or the protection could be provided by an additional airbag module. Since the introducing of the thorax airbag systems there has been a need for head impact protection. The bag module could be added to the seal of the window frame running from the instrument panel to the 'B'-pillar (Figures 14 and 15) [31].

7 SUMMARY AND CONCLUSIONS

In order to take the automotive airbag into the next century, the system must be designed as a 'smart' restraint system. Since the airbag system must know as much as possible about the occupants it is advisable to use a module that will incorporate the best of all the sensors to achieve a holistic approach to the

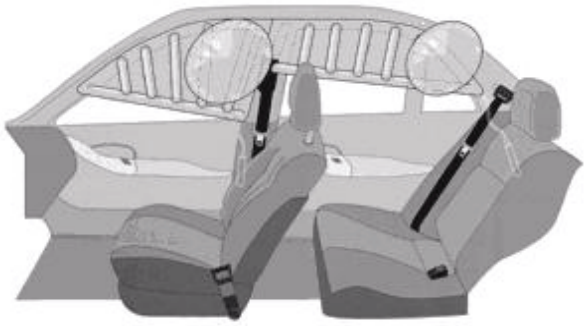

Figure 14 *Front and rear head restraints [65].*

Figure 15 *Front head and side impact restraints [65].*

occupant detection problem. Due to the complexity of the restraint system it is suggested that a fuzzy logic controller be developed with the requirements of the system in mind. The system should include a weight sensor for both the driver and passenger, infrared and ultrasonic occupant detection sensors, a distributed crash sensor arrangement (to guarantee the crash pulse is detectable), a dual stage airbag for both the driver and passenger and a microcontroller implementing a fuzzy logic algorithm.

The occupant detection sensors will allow the module to determine if and when the airbag should be deployed to prevent the bag from exploding in the face of the occupant in case of an out-of-position condition. According to the car's velocity, distance between occupant and airbag module as well as the size of the occupant, the reduced stage can either be ignited or the airbag can be entirely disabled, when an occupant-to-airbag distance is determined which would be more likely to induce additional injuries if the airbag is ignited [38].

Approximately one third of all steering-wheel airbag deployments in the current study resulted in facial

Table 5 *Airbag systems past, present and future summary* [12].

Devices	*Past*	*Present*	*Future*	*Model year available*	*Suppliers*	
Airbags					Takata	TRW
Driver side	X	X	X	Present		
Passenger side		X	X	Present		
Rear seat			X			
Side-impact		X	X	Present		
Head-protection			X			
Knee bolsters			X			
Inflators						
Pyrotechnic	X	X	X	Present		
Compressed gas			X			MY2001
Seatbelt pretensioner		X	X	Present		
Dual chamber inflators			X		MY1999	
Variable Rate inflator			X		MY1999	
Sensors						
Mechanical accelerometer	X	X	X	Present		
Electronic accelerometer		X	X	Present		
Seatbelt buckle switch		X	X	Present	MY1999	
Dual threshold crash sensor			X		MY1999	
Seat occupied			X			MY2000
Rearward facing child seat			X			MY2000
Out-of-position sensor			X		MY2000/01	MY2000
Weight sensor			X		MY2000/01	MY2001
Inflator pressure sensor			X			MY2000
Inflator temperature sensor			X			MY2000
Systems						
Energy management seatbelts		X	X	Present	MY1998	
Integral module & steering wheel		X	X	Present	MY2000	
Integrated belt to seat		X	X	Present	MY1998/99	
Single point sensing		X	X	Present		
Distributed sensing			X			MY1999
Centralized squib firing		X	X	Present		
Distributed squib firing			X			MY2000/01

injury, but almost all of these injuries are minor—including erythemia, abrasions and contusions [36]. Upper extremity injuries related to steering wheel airbag deployments occur in 38% of the steering wheel deployment cases. However, most of these are minor injuries consisting of abrasions, contusions, or small lacerations of the anterior forearm. Extremity fractures of the radius, ulna, or metacarpals, are infrequent (3%). When fractures do occur, it is usually because the extremity is flung into other vehicle structures [34, 36]. These injuries will be reduced, because the airbag will not be deployed in less severe crashes. The decision to deploy the airbag will not be based solely on the deployment threshold as the present system is, instead the system will use all of the available data to calculate the proper response to protect the occupants without adding to the possibility of creating more injuries. Table 5 contains a summary of the information that was compiled from various manufactures and suppliers of airbag technology. Table 5 contains a list of the various devices that make up the airbag system, and indicates what model year they will be available to the automotive manufactures for installation.

REFERENCES

1 Kobe, G. (1977) 'Smart airbags'. *Automotive Industries*, January, pp. 62–63.
2 Martin, N. (1997) 'Adaptive airbags coming'. *Automotive Industries*, March, p. 87.
3 Stoffer, H. (1997) 'Airbag rule coming very soon'. *Automotive News*, August, p. 4.
4 Prizinsky, D. (1997) 'TRW purchase adds airbag versatility'. *Automotive News*, September, p. 22D.
5 Lewin, T. (1997) 'Autoliv shows off smart airbag system'. *Automotive News*, September, p. 22P.
6 Jost, K. (1995) 'Occupant detection improves restraint performance'. *Automotive Engineering*, May, pp. 64–65.
7 Jost, K. (1995) 'Air-bag inflator alternatives'. *Automotive Engineering*, May, pp. 66–67.
8 Martin, N. (1996) 'This seat is occupied'. *Automotive Industries*, February, pp. 163–166.
9 Anonymous, (1996) 'Intergrating seat belt and air bag performance'. *Automotive Engineering*, August, p. 77–80.
10 Anonymous, (1996) 'Inflatable knee bolster'. *Automotive Engineering*, May, p. 103.
11 Anonymous, (1996) 'Headliner-mounted presence detector'. *Automotive Engineering*, May, p. 99.
12 Anonymous, (1996) 'Restraint system electronics'. *Automotive Engineering*, August, pp. 27–31.
13 Orner, P. (1992) 'A Physician-Engineer's view of low velocity rearend collisions', *Proceedings of SAE Automotive Safety: Present and Future Technology 921574*, pp. 11–17.
14 Marsh IV, J. (1993) 'Supplemental air bag restraint systems: consumer education and experience', *Proceedings of SAE Frontal impact protection seat belts and airbags 930646*, pp. 95–102.
15 Breed, D., Sanders, W.T. and Castelli, V. (1993) 'A complete frontal crash sensor system—1', *Proceedings of SAE Frontal impact protection: seat belts and airbags 930650*, pp. 119–132.
16 Gallup, D. (1991) 'Gas damped sensing of automotive crashes for airbag deployment', *Proceedings of SAE Sensors and actuators 910275*, pp. 59–63.
17 Diller, R. (1991) 'Electronic sensing of automotive crashes for airbag deployment', *Proceedings of SAE sensors and actuators 910276*, pp. 65–68.
18 Kanamoto, J., Miyamori M., Jinno, K. and Hirao, M. (1994) 'Electronic crash sensing unit for airbag', *Proceedings of SAE sensors and actuators, 940624*, pp. 1–7.
19 Offenberg, M., Munzel, H., Schubert, D., Schatz, O., Larmer, F., Muller, E., Maihofer, B. and Marek, J. (1996) 'Acceleration sensor in surface micromaching for airbag applications with high signal/noise ratio', *Proceedings of SAE sensors and actuators, 960758*, pp. 35–41.
20 Braham, J. (1997) 'Safety sparks technology advances'. *Machine Design*, September, pp. 58–64.
21 Jost, K. (1995) 'Side impact and sensing'. *Automotive Engineering*, May, pp. 62–63.
22 Anonymous, (1996) 'Truck air bag control'. *Automotive Engineering*, July, pp. 71–73.
23 Birch, S. (1996) 'Self-aligning head restraint'. *Automotive Engineering*, May, p. 107.
24 Ashley, S. (1994) 'Automotive safety is in the bag'. *Mechanical Engineering*, January, pp. 59–64.
25 Anonymous, (1996) 'Reducing leg injuries', *Automotive Engineering*, August, pp. 53–56.
26 Phelan, M. (1996) 'Audi A8'. *Automotive Industries*, October, p. 111.
27 Martin, N. (1996) 'Change is in the air'. *Automotive Industries*, October, pp. 127–128.
28 Meister, J. and Womble, M. (1993) 'Air bag impact sensing'. *Automotive Engineering*, April, pp. 11–13.
29 Sorge, M. (1997) 'New angle on airbags'. *Automotive Industries*, June, p. 69.
30 Martin, N. (1997) 'Adaptive airbags coming'. *Automotive Industries*, March, p. 87.
31 Mueller, H. (1997) 'Roof Airbags', *Proceedings of the 1997 International Congress & Exposition. Motor Vehicle Safety Design Innovations SAE special publication*, **1226**, February, pp. 73–83.
32 Robbins, M. (1997) 'Synergistic Motor Vehicle Safety', *Proceedings of the 1997 International Congress & Exposition. Motor Vehicle Safety Design Innovations SAE special publication*, **1226**, February, pp. 91–95.
33 Coben, L. (1997) 'The Risk and Benefits of Airbag Systems: Are They Needlessly Killing and Injuring Motorists?' *Proceedings of the 1997 International Congress & Exposition. Motor Vehicle Safety Design Innovations SAE special publication*, **1226**, February, pp. 103–110.
34 Huelke, D., Gilbert, R. and Schneider, L. (1997) 'Upper-Extremity Injuries from Steering Wheel Airbag Deployments', *Proceedings of the 1997 International Congress & Exposition. Motor Vehicle Safety Design Innovations SAE special publication*, **1226**, February, pp. 111–116.
35 Czernakowski, W. and Bell, R. (1997) 'A Method to Assess the Effectiveness of Child Restraint Systems', *Proceedings of the 1997 International Congress & Exposition. Motor Vehicle Safety Design Innovations SAE special publication*, **1226**, February, pp. 137–142.
36 Huelke, D., Schneider, L., Reed, M. and Gilbert, R. (1997) 'Facial, Periorbital and Ocular Injuries Related to Steering-Wheel Airbag Deployment', *Proceedings of the 1997 International Congress & Exposition. Motor Vehicle Safety Design Innovations SAE special publication*, **1226**, February, pp. 97–102.

37 Gioutsos, T. and Kwun, H. (1997) 'The Use of Magnetostrictive Sensors for Vehicle Safety Applications', *Proceedings of the 1997 International Congress & Exposition. Motor Vehicle Safety Design Innovations SAE special publication*, **1226**, February, pp. 159–162.
38 Adomeit, H., Wils, O. and Heym, A. (1997) 'Adaptive Airbag-Belt-Restraints—An Analysis of Biomechanical Benefits', *Proceedings of the 1997 International Congress & Exposition. Motor Vehicle Safety Design Innovations SAE special publication*, **1226**, February, pp. 163–177.
39 Spiess, O., Marotzke, T. and Zahn, M. (1997) 'Development Methodology of an Airbag Integrated Steering Wheel in Order to Optimize Occupant Protection Balanced Against Out-of Position Risks', *Proceedings of the 1997 International Congress & Exposition. Motor Vehicle Safety Design Innovations SAE special publication*, **1226**, February, pp. 179–191.
40 Anonymous, (1996) 'Safety Engineering', *Automotive Industries*, October, p. 67.
41 McCosh, D. (1997) 'Lethal Force? Airbags aren't the final solution to keeping you alive in a crash'. *Popular Science*, May, pp. 76–79.
42 Conlee, J. (1996) 'Passenger Side Air Bag System for Open Interior Architecture'. *Automotive Engineering*, May, pp. 19–22.
43 Jahn, W. and Brambilla, L. (1992) Motor vehicle with a safety belt and an airbag system. U.S. Patent 5,174,600.
44 Brown, Jr., M. (1981) Vehicle safety restraint device. U.S. Patent 4,298,214.
45 Goor, D. (1995) Integral inflatable occupant restraint system. U.S. Patent 5,390,952.
46 Breed, D., Castelli, V. and Pruszenski, Jr., A. (1993) Side impact sensors. U.S. Patent 5,231,253.
47 Meister, J. and Walcott, B. (1997) Occupant and infant seat detection in a vehicle supplemental restraint system. U.S. Patent 5,678,854.
48 Rink, K., Green, D. and Letendre, G. (1997) Inflators which store premixed fluid fuel and oxidizer in a porous matrix. U.S. Patent 5,649,720.
49 Breed, D. and Sanders, W. (1997) Airbag system with self shaping airbag. U.S. Patent 5,653,464.
50 Johnson, D. and Pierotti, L. (1997) Liquid propellant airbag inflator with auto injection combustion chamber. U.S. Patent 5,669,631.
51 Bunker, S., Minert, D., Green, D., Saderholm, Davin G. and Storey, J. (1997) Seat mounted side impact airbags. U.S. Patent 5,667,241.
52 Buchanan, E., Smith, B. and Woodbury, M. (1997) Hybrid adaptive inflator for airbags. U.S. Patent 5,630,619.
53 Mandzy, J., Brown, S., Messina, N. and Ingram, L. (1997) Vehicle occupant restraint apparatus. U.S. Patent 5,639,117.
54 Hatfield, J. (1994) Paul Portable motor vehicle safety airbag. U.S. Patent 5,333,902.
55 Brede, U., Kordel, G., Seebeck, W. and Wellner, (1994) Passive safety device using optical signals for controlling an airbag system of a vehicle, method for optically triggering the passive safety device, and opto-mechanical acceleration sensor. U.S. Patent 5,291,014.
56 Hirabayashi, H. and Yoshikawa, H. (1994) Airbag of vehicular airbag restraint system. U.S. Patent 5,275,434.
57 Breed, D., Castelli, V. and Pruszenski, Jr., A. (1993) Side impact sensors. U.S. Patent 5,231,253.
58 Imai, H. (1993) Airbag restraint system. U.S. Patent 5,186,489.
59 Rhee, D., Boran, C., Bauch, D. and Lynch, M. (1993) Airbag triggering system. U.S. Patent 5,194,755.
60 Goor, D. (1993) Integral inflatable occupant restraint system. U.S. Patent 5,184,844.
61 Huber, A. (1992) Single-sensing airbag system with zero power consumption in the "key-off" state. U.S. Patent 5,170,066.
62 Scientific American web site: http://www.sciam.com/0696issue/0696working.html
63 'Airbags & Vehicle Ergonomics', http://www.ergonite.demon.co.uk/ergonite/airbfq2a.html
64 'Airbags & Vehicle Ergonomics', http://www.ergonite.demon.co.uk/ergonite/airbfq2b.html
65 'Airbags & Vehicle Ergonomics', http://www.ergonite.demon.co.uk/ergonite/airbfq2c.html
66 TRW Automotive Electronics web site: http://www.trw.com/elect/compet.html