US 20080218611A1

(19) United States

(12) Patent Application Publication

(10) Pub. No.: US 2008/0218611 A1

(43) Pub. Date: Sep. 11, 2008

Parulski et al.

(54) METHOD AND APPARATUS FOR OPERATING A DUAL LENS CAMERA TO AUGMENT AN IMAGE

(76) Inventors: **Kenneth A. Parulski**, Rochester, NY (US); **Wilbert F. Janson**, Shortsville, NY (US); **John N. Border**, Walworth, NY (US); **John R. Fredlund**, Rochester, NY (US); **Joseph A. Manico**, Rochester, NY (US); **Robert J. Parada**, Rochester, NY (US)

Correspondence Address:
Frank Pincelli
Patent Legal Staff
Eastman Kodak Company, 343 State Street
Rochester, NY 14650-2201 (US)

(21) Appl. No.: **11/684,025**

(22) Filed: **Mar. 9, 2007**

Publication Classification

(51) **Int. Cl.**
H04N 9/09 (2006.01)

(52) **U.S. Cl.** **348/262**; 348/E09.006

(57) **ABSTRACT**

An electronic camera for producing an output image of a scene from a captured image signal includes a first imaging stage comprising a first image sensor for generating a first sensor output and a first lens for forming a first image of the scene on the first image sensor, and a second imaging stage comprising a second image sensor for generating a second sensor output and a second lens for forming a second image of the scene on the second image sensor. The sensor output from the first imaging stage is used as a primary output image for forming the captured image signal and the sensor output from the second imaging stage is used as a secondary output image for modifying the primary output image, thereby generating an enhanced, captured image signal.

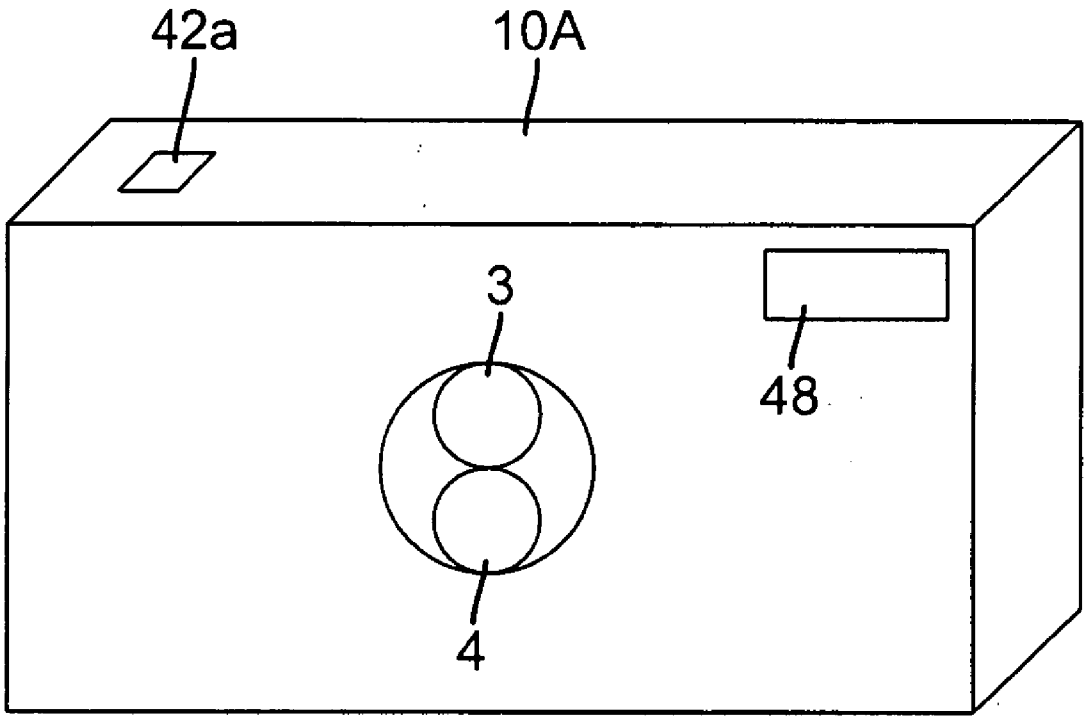

GOOGLE EXHIBIT 1005

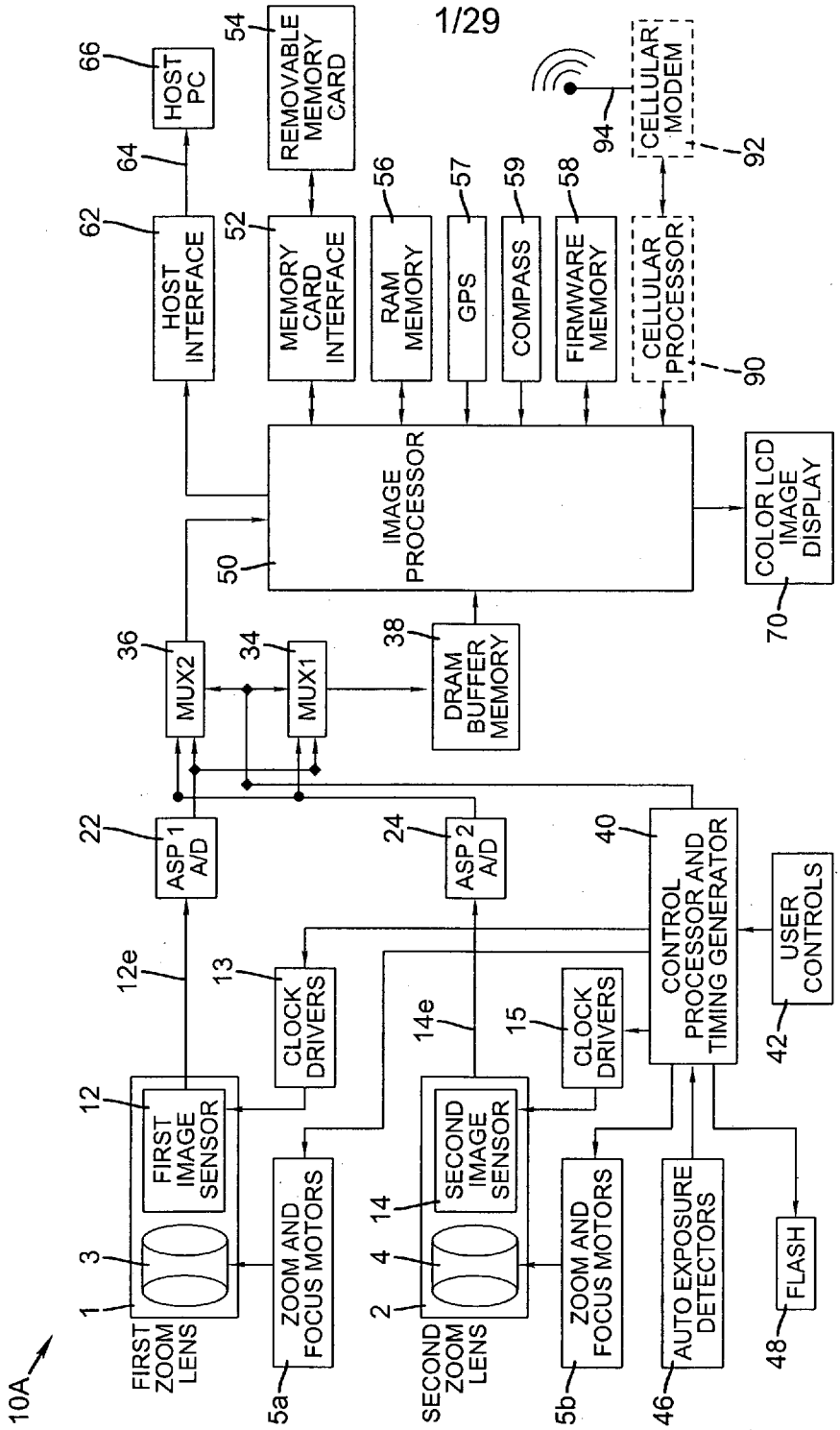
1/29
10A
FIRST ZOOM LENS
1
3
FIRST IMAGE SENSOR
12
12e
ZOOM AND FOCUS MOTORS
5a
SECOND ZOOM LENS
2
4
SECOND IMAGE SENSOR
14
14e
ZOOM AND FOCUS MOTORS
5b
ASP 1 A/D
22
ASP 2 A/D
24
CLOCK DRIVERS
13
CLOCK DRIVERS
15
MUX2
36
MUX1
34
DRAM BUFFER MEMORY
38
IMAGE PROCESSOR
50
CONTROL PROCESSOR AND TIMING GENERATOR
40
USER CONTROLS
42
AUTO EXPOSURE DETECTORS
46
FLASH
48
COLOR LCD IMAGE DISPLAY
70
HOST INTERFACE
62
HOST PC
64
66
MEMORY CARD INTERFACE
52
REMOVABLE MEMORY CARD
54
RAM MEMORY
56
GPS
57
COMPASS
59
FIRMWARE MEMORY
58
CELLULAR PROCESSOR
90
CELLULAR MODEM
92
94

FIG. 1

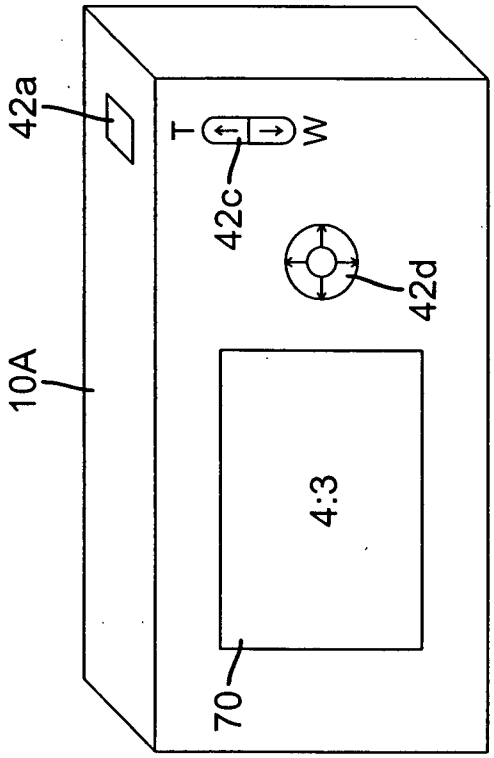

FIG. 2B

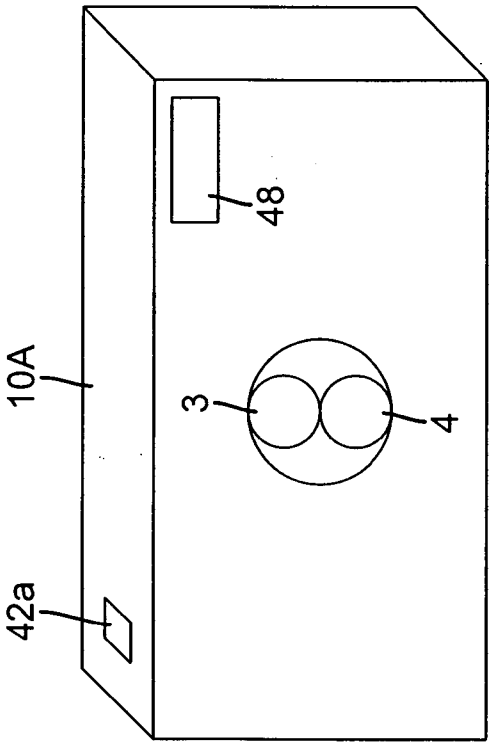

FIG. 2A

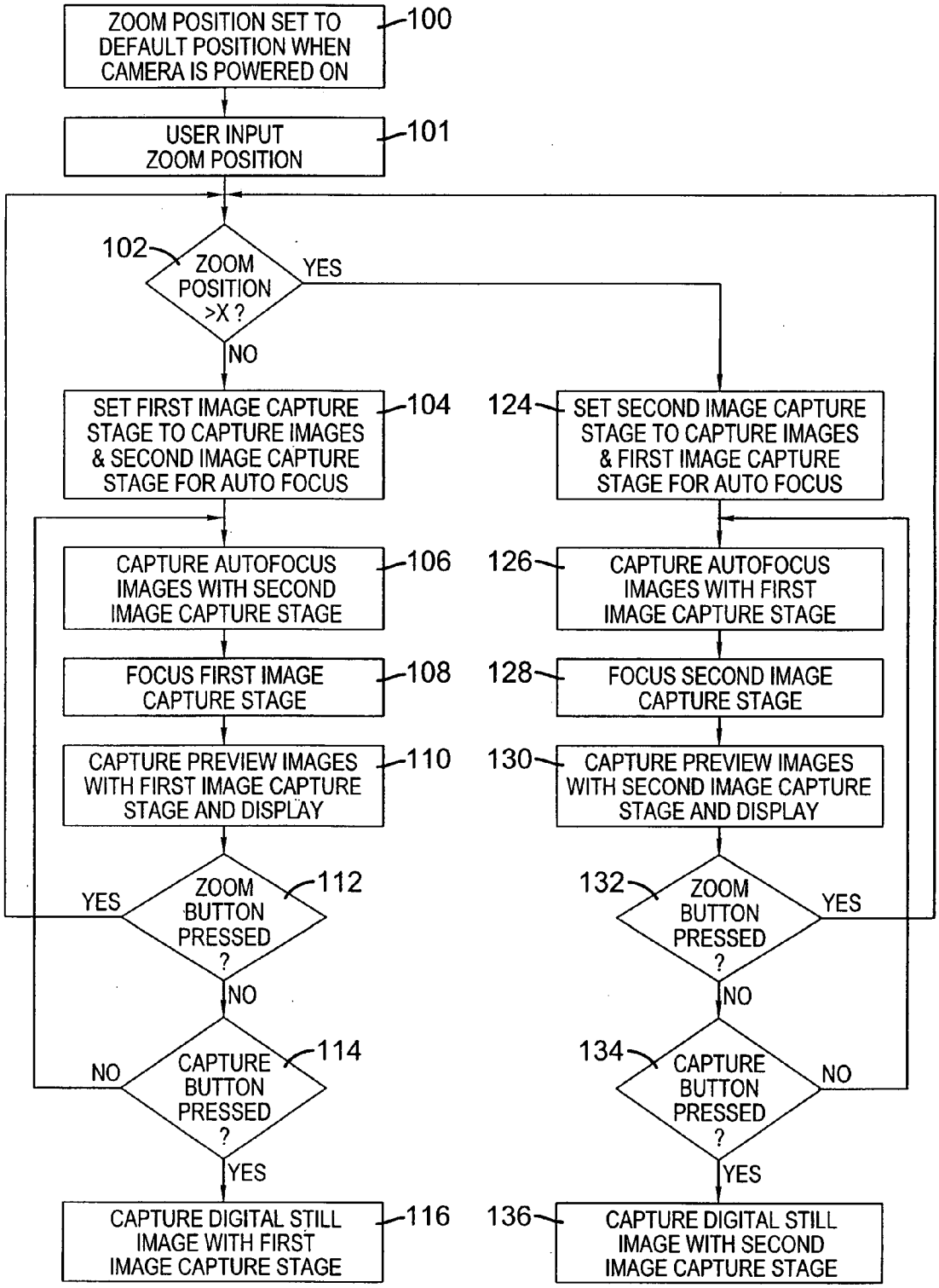
ZOOM POSITION SET TO DEFAULT POSITION WHEN CAMERA IS POWERED ON
100
USER INPUT ZOOM POSITION
101
102
ZOOM POSITION >X ?
YES
NO
SET FIRST IMAGE CAPTURE STAGE TO CAPTURE IMAGES & SECOND IMAGE CAPTURE STAGE FOR AUTO FOCUS
104
124
SET SECOND IMAGE CAPTURE STAGE TO CAPTURE IMAGES & FIRST IMAGE CAPTURE STAGE FOR AUTO FOCUS
CAPTURE AUTOFOCUS IMAGES WITH SECOND IMAGE CAPTURE STAGE
106
126
CAPTURE AUTOFOCUS IMAGES WITH FIRST IMAGE CAPTURE STAGE
FOCUS FIRST IMAGE CAPTURE STAGE
108
128
FOCUS SECOND IMAGE CAPTURE STAGE
CAPTURE PREVIEW IMAGES WITH FIRST IMAGE CAPTURE STAGE AND DISPLAY
110
130
CAPTURE PREVIEW IMAGES WITH SECOND IMAGE CAPTURE STAGE AND DISPLAY
ZOOM BUTTON PRESSED ?
112
132
YES
NO
CAPTURE BUTTON PRESSED ?
114
134
NO
YES
CAPTURE DIGITAL STILL IMAGE WITH FIRST IMAGE CAPTURE STAGE
116
136
CAPTURE DIGITAL STILL IMAGE WITH SECOND IMAGE CAPTURE STAGE

FIG. 3

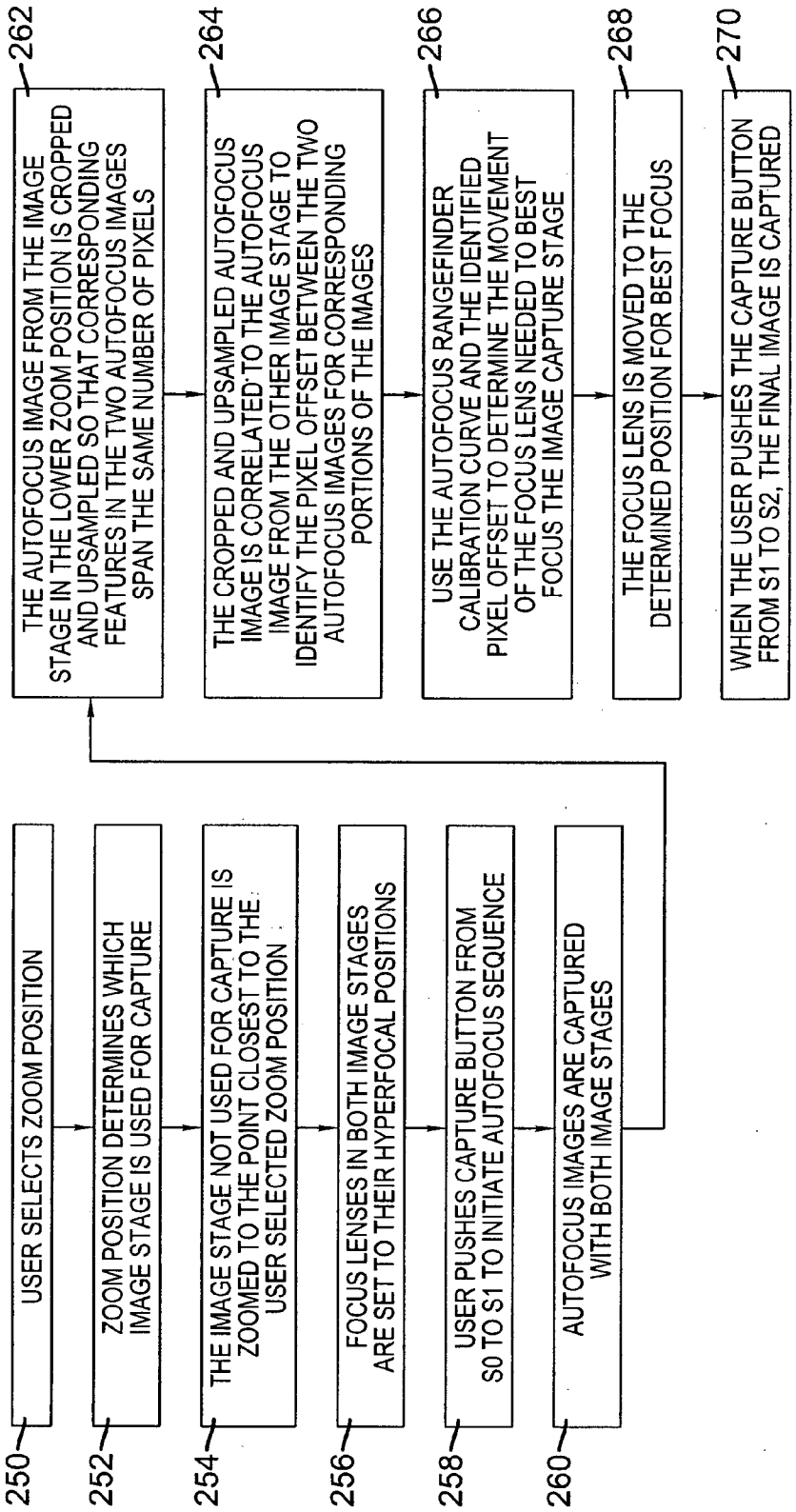
250
USER SELECTS ZOOM POSITION
252
ZOOM POSITION DETERMINES WHICH IMAGE STAGE IS USED FOR CAPTURE
254
THE IMAGE STAGE NOT USED FOR CAPTURE IS ZOOMED TO THE POINT CLOSEST TO THE USER SELECTED ZOOM POSITION
256
FOCUS LENSES IN BOTH IMAGE STAGES ARE SET TO THEIR HYPERFOCAL POSITIONS
258
USER PUSHES CAPTURE BUTTON FROM S0 TO S1 TO INITIATE AUTOFOCUS SEQUENCE
260
AUTOFOCUS IMAGES ARE CAPTURED WITH BOTH IMAGE STAGES
262
THE AUTOFOCUS IMAGE FROM THE IMAGE STAGE IN THE LOWER ZOOM POSITION IS CROPPED AND UPSAMPLED SO THAT CORRESPONDING FEATURES IN THE TWO AUTOFOCUS IMAGES SPAN THE SAME NUMBER OF PIXELS
264
THE CROPPED AND UPSAMPLED AUTOFOCUS IMAGE IS CORRELATED TO THE AUTOFOCUS IMAGE FROM THE OTHER IMAGE STAGE TO IDENTIFY THE PIXEL OFFSET BETWEEN THE TWO AUTOFOCUS IMAGES FOR CORRESPONDING PORTIONS OF THE IMAGES
266
USE THE AUTOFOCUS RANGEFINDER CALIBRATION CURVE AND THE IDENTIFIED PIXEL OFFSET TO DETERMINE THE MOVEMENT OF THE FOCUS LENS NEEDED TO BEST FOCUS THE IMAGE CAPTURE STAGE
268
THE FOCUS LENS IS MOVED TO THE DETERMINED POSITION FOR BEST FOCUS
270
WHEN THE USER PUSHES THE CAPTURE BUTTON FROM S1 TO S2, THE FINAL IMAGE IS CAPTURED

FIG. 4

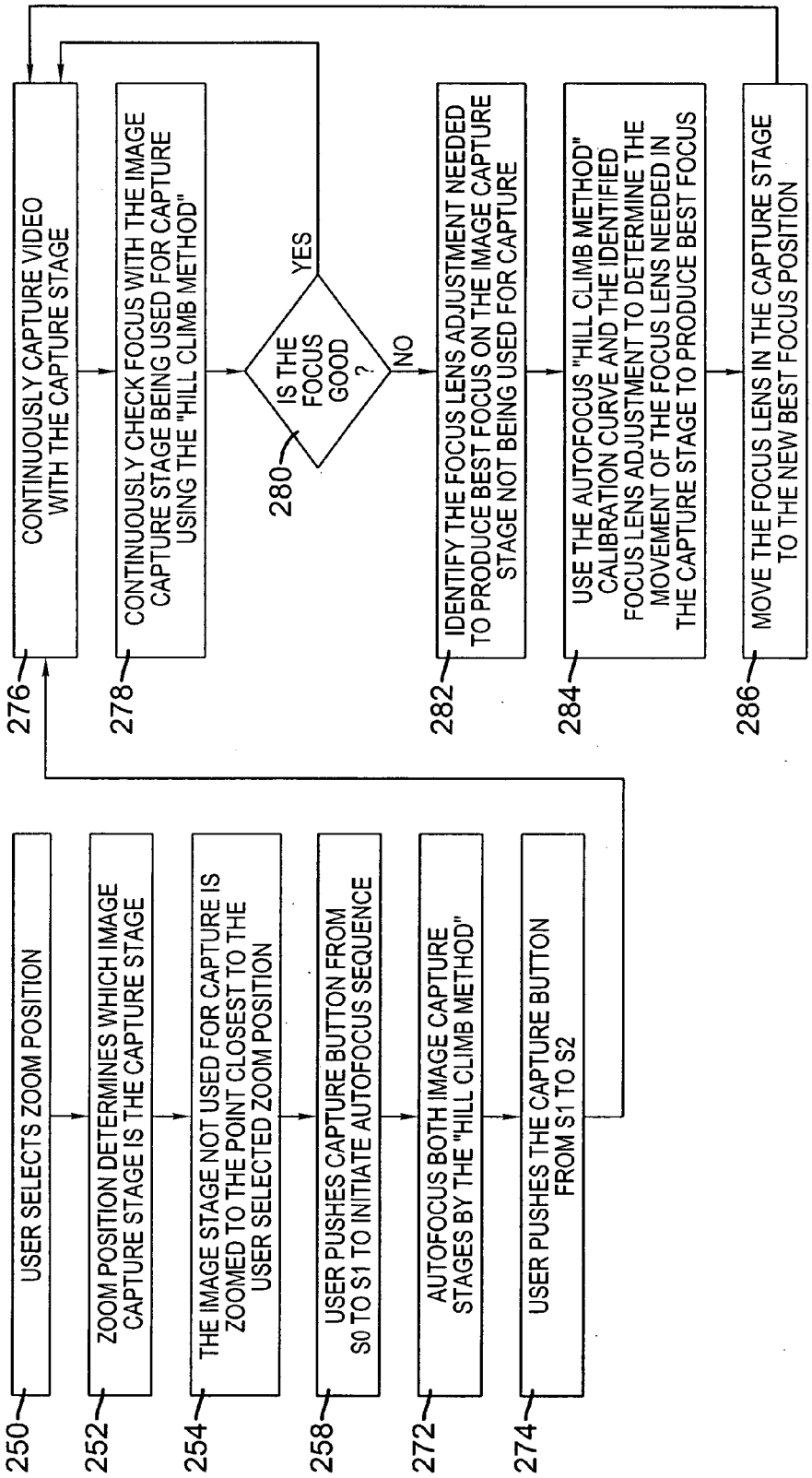
USER SELECTS ZOOM POSITION
250
ZOOM POSITION DETERMINES WHICH IMAGE CAPTURE STAGE IS THE CAPTURE STAGE
252
THE IMAGE STAGE NOT USED FOR CAPTURE IS ZOOMED TO THE POINT CLOSEST TO THE USER SELECTED ZOOM POSITION
254
USER PUSHES CAPTURE BUTTON FROM S0 TO S1 TO INITIATE AUTOFOCUS SEQUENCE
258
AUTOFOCUS BOTH IMAGE CAPTURE STAGES BY THE "HILL CLIMB METHOD"
272
USER PUSHES THE CAPTURE BUTTON FROM S1 TO S2
274
CONTINUOUSLY CAPTURE VIDEO WITH THE CAPTURE STAGE
276
CONTINUOUSLY CHECK FOCUS WITH THE IMAGE CAPTURE STAGE BEING USED FOR CAPTURE USING THE "HILL CLIMB METHOD"
278
IS THE FOCUS GOOD ?
280
YES
NO
IDENTIFY THE FOCUS LENS ADJUSTMENT NEEDED TO PRODUCE BEST FOCUS ON THE IMAGE CAPTURE STAGE NOT BEING USED FOR CAPTURE
282
USE THE AUTOFOCUS "HILL CLIMB METHOD" CALIBRATION CURVE AND THE IDENTIFIED FOCUS LENS ADJUSTMENT TO DETERMINE THE MOVEMENT OF THE FOCUS LENS NEEDED IN THE CAPTURE STAGE TO PRODUCE BEST FOCUS
284
MOVE THE FOCUS LENS IN THE CAPTURE STAGE TO THE NEW BEST FOCUS POSITION
286

FIG. 5

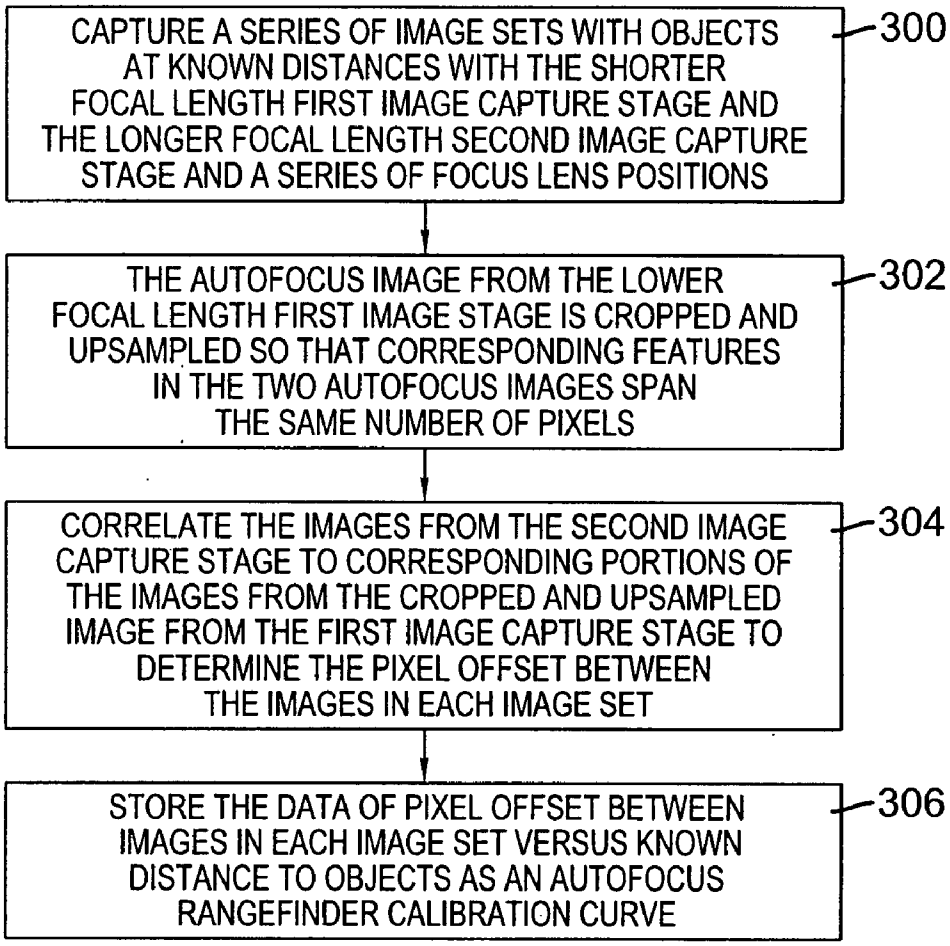
CAPTURE A SERIES OF IMAGE SETS WITH OBJECTS AT KNOWN DISTANCES WITH THE SHORTER FOCAL LENGTH FIRST IMAGE CAPTURE STAGE AND THE LONGER FOCAL LENGTH SECOND IMAGE CAPTURE STAGE AND A SERIES OF FOCUS LENS POSITIONS
300
THE AUTOFOCUS IMAGE FROM THE LOWER FOCAL LENGTH FIRST IMAGE STAGE IS CROPPED AND UPSAMPLED SO THAT CORRESPONDING FEATURES IN THE TWO AUTOFOCUS IMAGES SPAN THE SAME NUMBER OF PIXELS
302
CORRELATE THE IMAGES FROM THE SECOND IMAGE CAPTURE STAGE TO CORRESPONDING PORTIONS OF THE IMAGES FROM THE CROPPED AND UPSAMPLED IMAGE FROM THE FIRST IMAGE CAPTURE STAGE TO DETERMINE THE PIXEL OFFSET BETWEEN THE IMAGES IN EACH IMAGE SET
304
STORE THE DATA OF PIXEL OFFSET BETWEEN IMAGES IN EACH IMAGE SET VERSUS KNOWN DISTANCE TO OBJECTS AS AN AUTOFOCUS RANGEFINDER CALIBRATION CURVE
306

FIG. 6

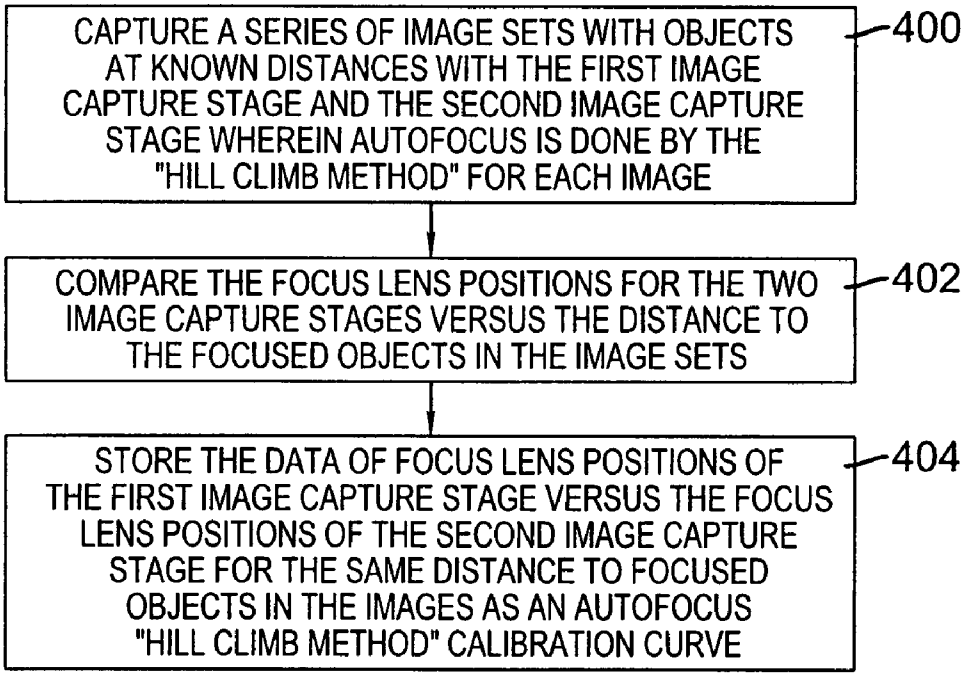
CAPTURE A SERIES OF IMAGE SETS WITH OBJECTS AT KNOWN DISTANCES WITH THE FIRST IMAGE CAPTURE STAGE AND THE SECOND IMAGE CAPTURE STAGE WHEREIN AUTOFOCUS IS DONE BY THE "HILL CLIMB METHOD" FOR EACH IMAGE
400
COMPARE THE FOCUS LENS POSITIONS FOR THE TWO IMAGE CAPTURE STAGES VERSUS THE DISTANCE TO THE FOCUSED OBJECTS IN THE IMAGE SETS
402
STORE THE DATA OF FOCUS LENS POSITIONS OF THE FIRST IMAGE CAPTURE STAGE VERSUS THE FOCUS LENS POSITIONS OF THE SECOND IMAGE CAPTURE STAGE FOR THE SAME DISTANCE TO FOCUSED OBJECTS IN THE IMAGES AS AN AUTOFOCUS "HILL CLIMB METHOD" CALIBRATION CURVE
404

FIG. 7

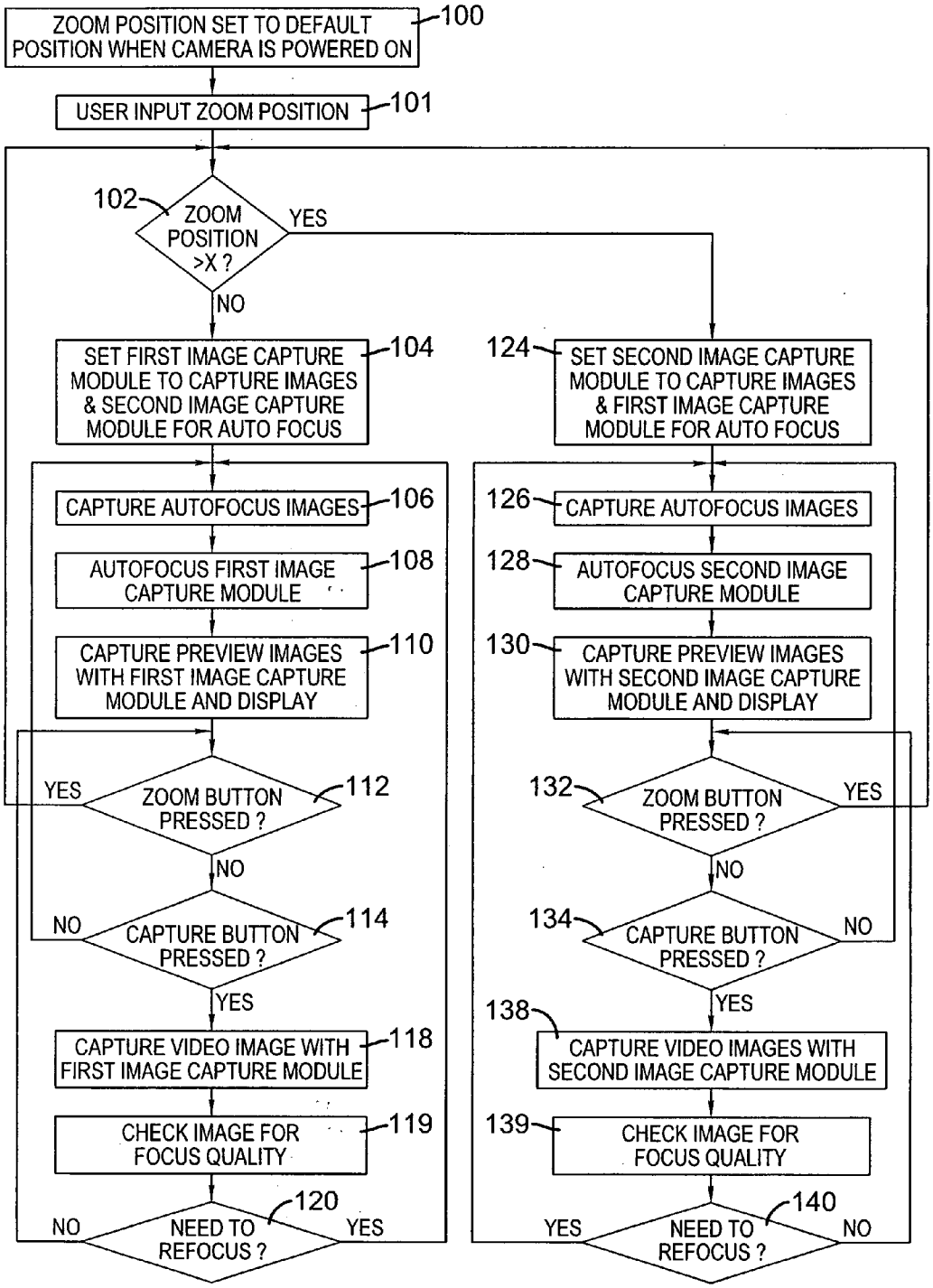
ZOOM POSITION SET TO DEFAULT POSITION WHEN CAMERA IS POWERED ON
100
USER INPUT ZOOM POSITION
101
102
ZOOM POSITION >X ?
YES
NO
SET FIRST IMAGE CAPTURE MODULE TO CAPTURE IMAGES & SECOND IMAGE CAPTURE MODULE FOR AUTO FOCUS
104
124
SET SECOND IMAGE CAPTURE MODULE TO CAPTURE IMAGES & FIRST IMAGE CAPTURE MODULE FOR AUTO FOCUS
CAPTURE AUTOFOCUS IMAGES
106
126
CAPTURE AUTOFOCUS IMAGES
AUTOFOCUS FIRST IMAGE CAPTURE MODULE
108
128
AUTOFOCUS SECOND IMAGE CAPTURE MODULE
CAPTURE PREVIEW IMAGES WITH FIRST IMAGE CAPTURE MODULE AND DISPLAY
110
130
CAPTURE PREVIEW IMAGES WITH SECOND IMAGE CAPTURE MODULE AND DISPLAY
YES
ZOOM BUTTON PRESSED ?
112
132
ZOOM BUTTON PRESSED ?
YES
NO
NO
CAPTURE BUTTON PRESSED ?
114
134
CAPTURE BUTTON PRESSED ?
NO
YES
YES
CAPTURE VIDEO IMAGE WITH FIRST IMAGE CAPTURE MODULE
118
138
CAPTURE VIDEO IMAGES WITH SECOND IMAGE CAPTURE MODULE
CHECK IMAGE FOR FOCUS QUALITY
119
139
CHECK IMAGE FOR FOCUS QUALITY
120
NO
NEED TO REFOCUS ?
YES
140
YES
NEED TO REFOCUS ?
NO

FIG. 8

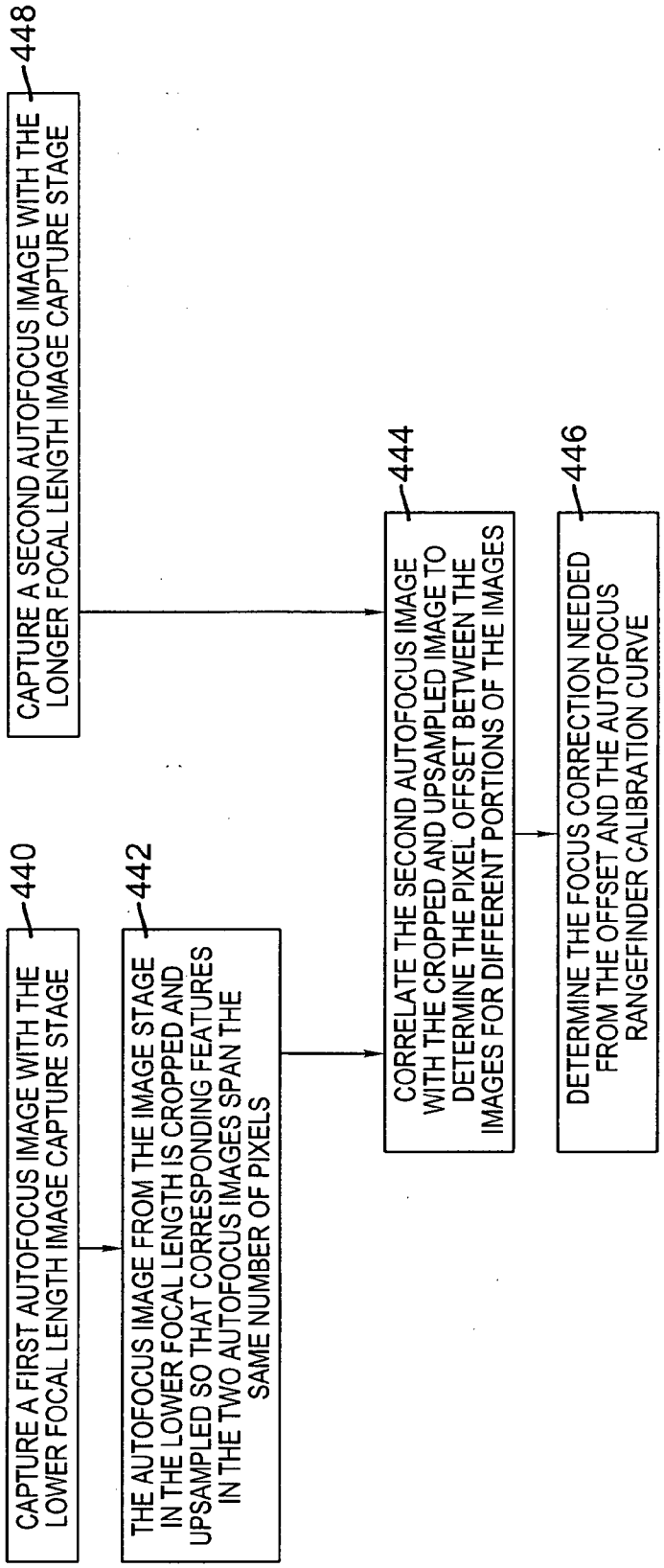
440
CAPTURE A FIRST AUTOFOCUS IMAGE WITH THE LOWER FOCAL LENGTH IMAGE CAPTURE STAGE
442
THE AUTOFOCUS IMAGE FROM THE IMAGE STAGE IN THE LOWER FOCAL LENGTH IS CROPPED AND UPSAMPLED SO THAT CORRESPONDING FEATURES IN THE TWO AUTOFOCUS IMAGES SPAN THE SAME NUMBER OF PIXELS
448
CAPTURE A SECOND AUTOFOCUS IMAGE WITH THE LONGER FOCAL LENGTH IMAGE CAPTURE STAGE
444
CORRELATE THE SECOND AUTOFOCUS IMAGE WITH THE CROPPED AND UPSAMPLED IMAGE TO DETERMINE THE PIXEL OFFSET BETWEEN THE IMAGES FOR DIFFERENT PORTIONS OF THE IMAGES
446
DETERMINE THE FOCUS CORRECTION NEEDED FROM THE OFFSET AND THE AUTOFOCUS RANGEFINDER CALIBRATION CURVE

FIG. 9

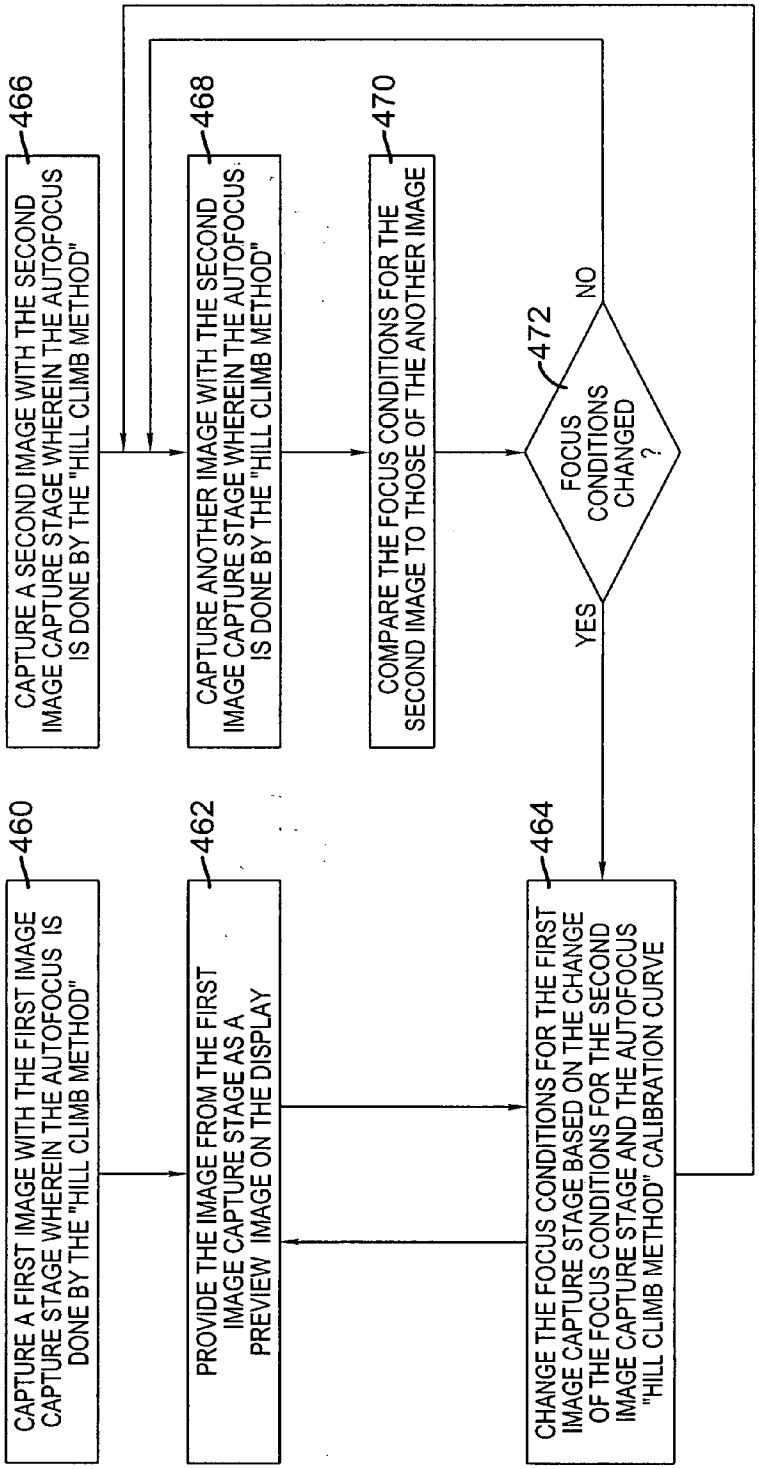
460
CAPTURE A FIRST IMAGE WITH THE FIRST IMAGE CAPTURE STAGE WHEREIN THE AUTOFOCUS IS DONE BY THE "HILL CLIMB METHOD"
462
PROVIDE THE IMAGE FROM THE FIRST IMAGE CAPTURE STAGE AS A PREVIEW IMAGE ON THE DISPLAY
464
CHANGE THE FOCUS CONDITIONS FOR THE FIRST IMAGE CAPTURE STAGE BASED ON THE CHANGE OF THE FOCUS CONDITIONS FOR THE SECOND IMAGE CAPTURE STAGE AND THE AUTOFOCUS "HILL CLIMB METHOD" CALIBRATION CURVE
466
CAPTURE A SECOND IMAGE WITH THE SECOND IMAGE CAPTURE STAGE WHEREIN THE AUTOFOCUS IS DONE BY THE "HILL CLIMB METHOD"
468
CAPTURE ANOTHER IMAGE WITH THE SECOND IMAGE CAPTURE STAGE WHEREIN THE AUTOFOCUS IS DONE BY THE "HILL CLIMB METHOD"
470
COMPARE THE FOCUS CONDITIONS FOR THE SECOND IMAGE TO THOSE OF THE ANOTHER IMAGE
472
FOCUS CONDITIONS CHANGED ?
NO
YES

FIG. 10

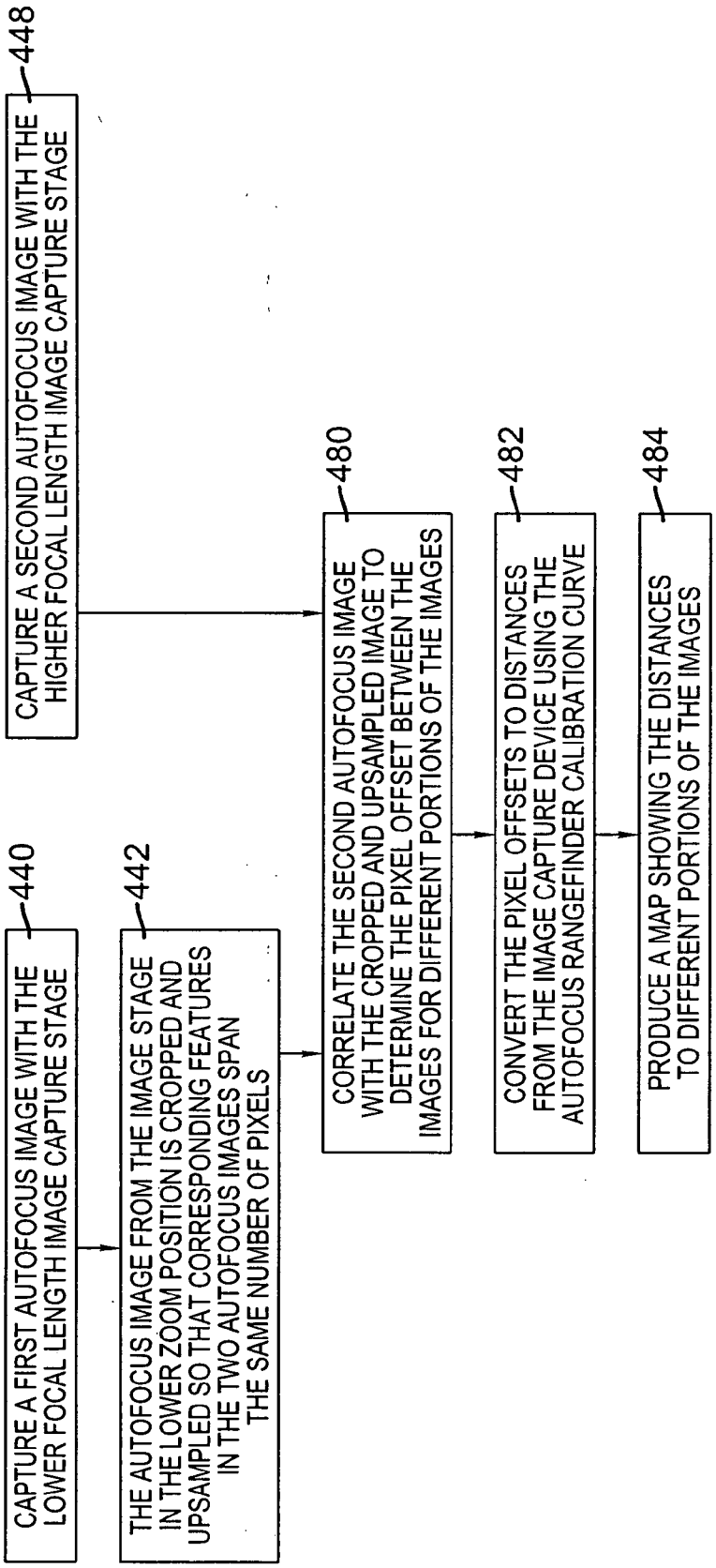
440
CAPTURE A FIRST AUTOFOCUS IMAGE WITH THE LOWER FOCAL LENGTH IMAGE CAPTURE STAGE
442
THE AUTOFOCUS IMAGE FROM THE IMAGE STAGE IN THE LOWER ZOOM POSITION IS CROPPED AND UPSAMPLED SO THAT CORRESPONDING FEATURES IN THE TWO AUTOFOCUS IMAGES SPAN THE SAME NUMBER OF PIXELS
448
CAPTURE A SECOND AUTOFOCUS IMAGE WITH THE HIGHER FOCAL LENGTH IMAGE CAPTURE STAGE
480
CORRELATE THE SECOND AUTOFOCUS IMAGE WITH THE CROPPED AND UPSAMPLED IMAGE TO DETERMINE THE PIXEL OFFSET BETWEEN THE IMAGES FOR DIFFERENT PORTIONS OF THE IMAGES
482
CONVERT THE PIXEL OFFSETS TO DISTANCES FROM THE IMAGE CAPTURE DEVICE USING THE AUTOFOCUS RANGEFINDER CALIBRATION CURVE
484
PRODUCE A MAP SHOWING THE DISTANCES TO DIFFERENT PORTIONS OF THE IMAGES

FIG. 11

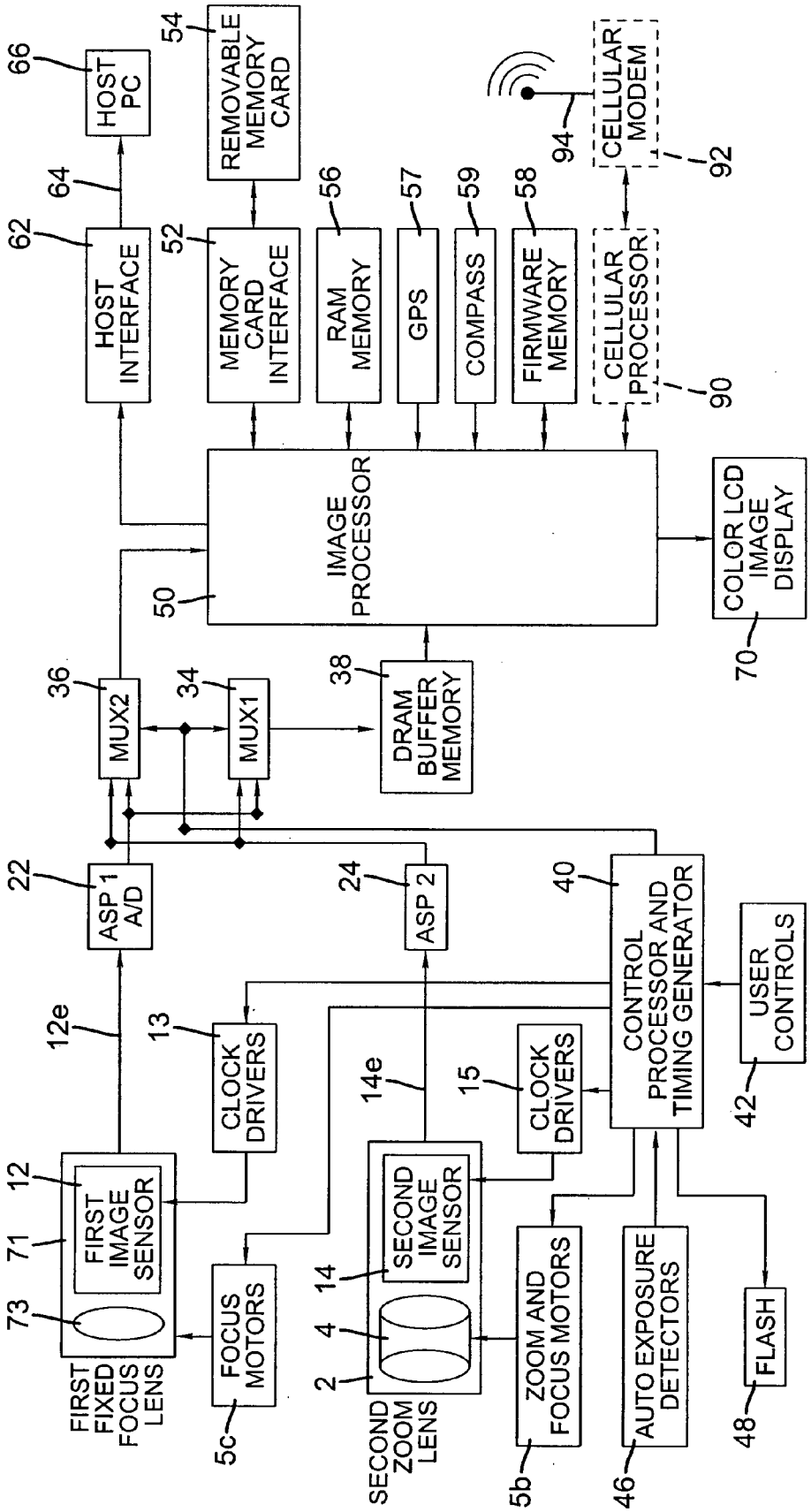
HOST PC
66
REMOVABLE MEMORY CARD
54
CELLULAR MODEM
92
94
64
62
HOST INTERFACE
52
MEMORY CARD INTERFACE
56
RAM MEMORY
57
GPS
59
COMPASS
58
FIRMWARE MEMORY
CELLULAR PROCESSOR
90
IMAGE PROCESSOR
50
COLOR LCD IMAGE DISPLAY
70
36
MUX2
34
MUX1
38
DRAM BUFFER MEMORY
22
ASP 1 A/D
24
ASP 2
40
CONTROL PROCESSOR AND TIMING GENERATOR
USER CONTROLS
42
12e
13
CLOCK DRIVERS
14e
15
CLOCK DRIVERS
12
FIRST IMAGE SENSOR
71
73
FIRST FIXED FOCUS LENS
FOCUS MOTORS
5c
14
SECOND IMAGE SENSOR
4
2
SECOND ZOOM LENS
ZOOM AND FOCUS MOTORS
5b
AUTO EXPOSURE DETECTORS
46
FLASH
48

FIG. 12

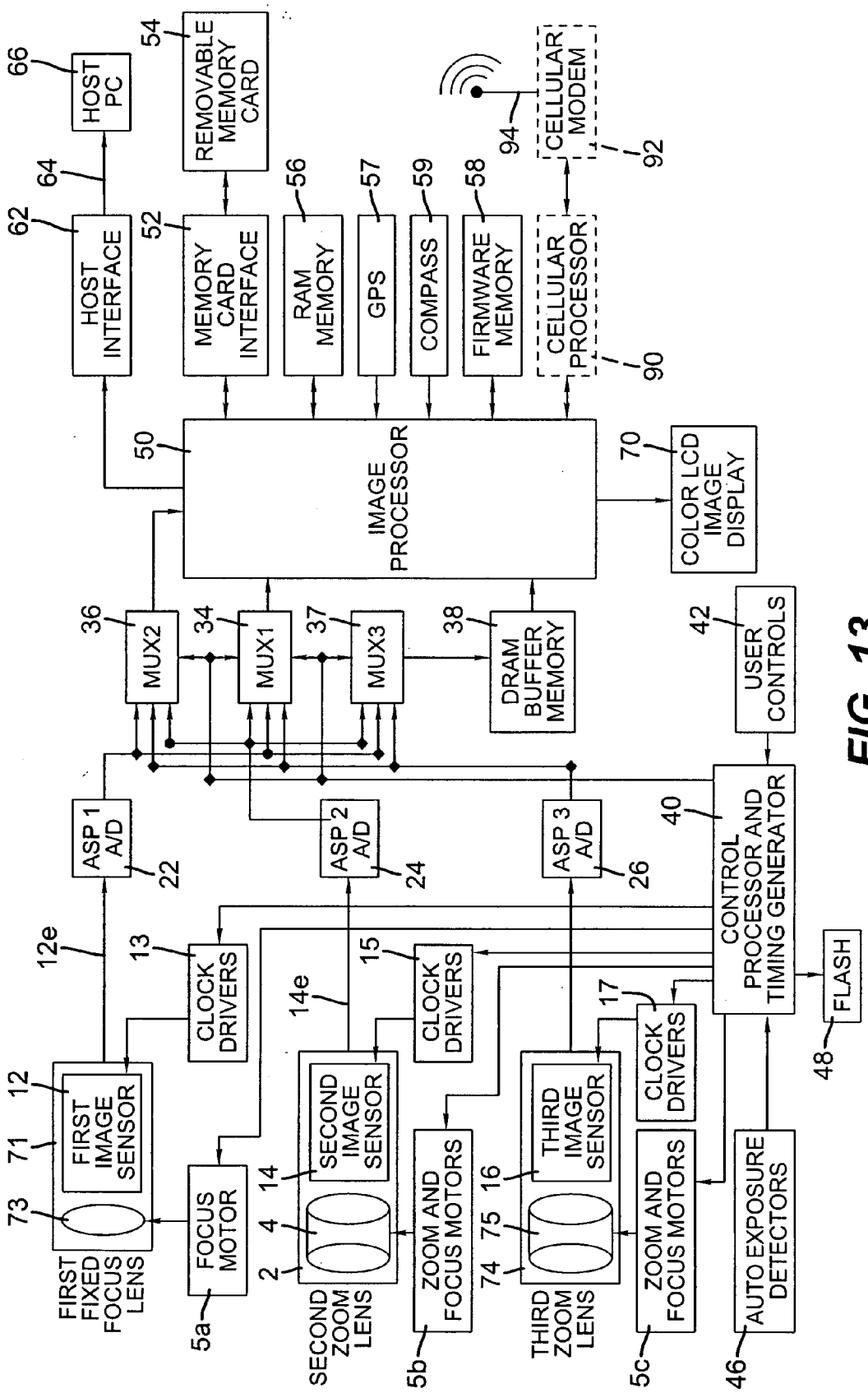
HOST PC
66
64
HOST INTERFACE
62
REMOVABLE MEMORY CARD
54
MEMORY CARD INTERFACE
52
RAM MEMORY
56
GPS
57
COMPASS
59
FIRMWARE MEMORY
58
CELLULAR MODEM
92
94
CELLULAR PROCESSOR
90
IMAGE PROCESSOR
50
COLOR LCD IMAGE DISPLAY
70
MUX2
36
MUX1
34
MUX3
37
DRAM BUFFER MEMORY
38
USER CONTROLS
42
ASP 1 A/D
22
ASP 2 A/D
24
ASP 3 A/D
26
CONTROL PROCESSOR AND TIMING GENERATOR
40
FLASH
48
12e
13
CLOCK DRIVERS
14e
15
CLOCK DRIVERS
17
CLOCK DRIVERS
12
FIRST IMAGE SENSOR
71
73
FIRST FIXED FOCUS LENS
FOCUS MOTOR
5a
14
SECOND IMAGE SENSOR
4
2
SECOND ZOOM LENS
ZOOM AND FOCUS MOTORS
5b
16
THIRD IMAGE SENSOR
75
74
THIRD ZOOM LENS
ZOOM AND FOCUS MOTORS
5c
AUTO EXPOSURE DETECTORS
46

FIG. 13

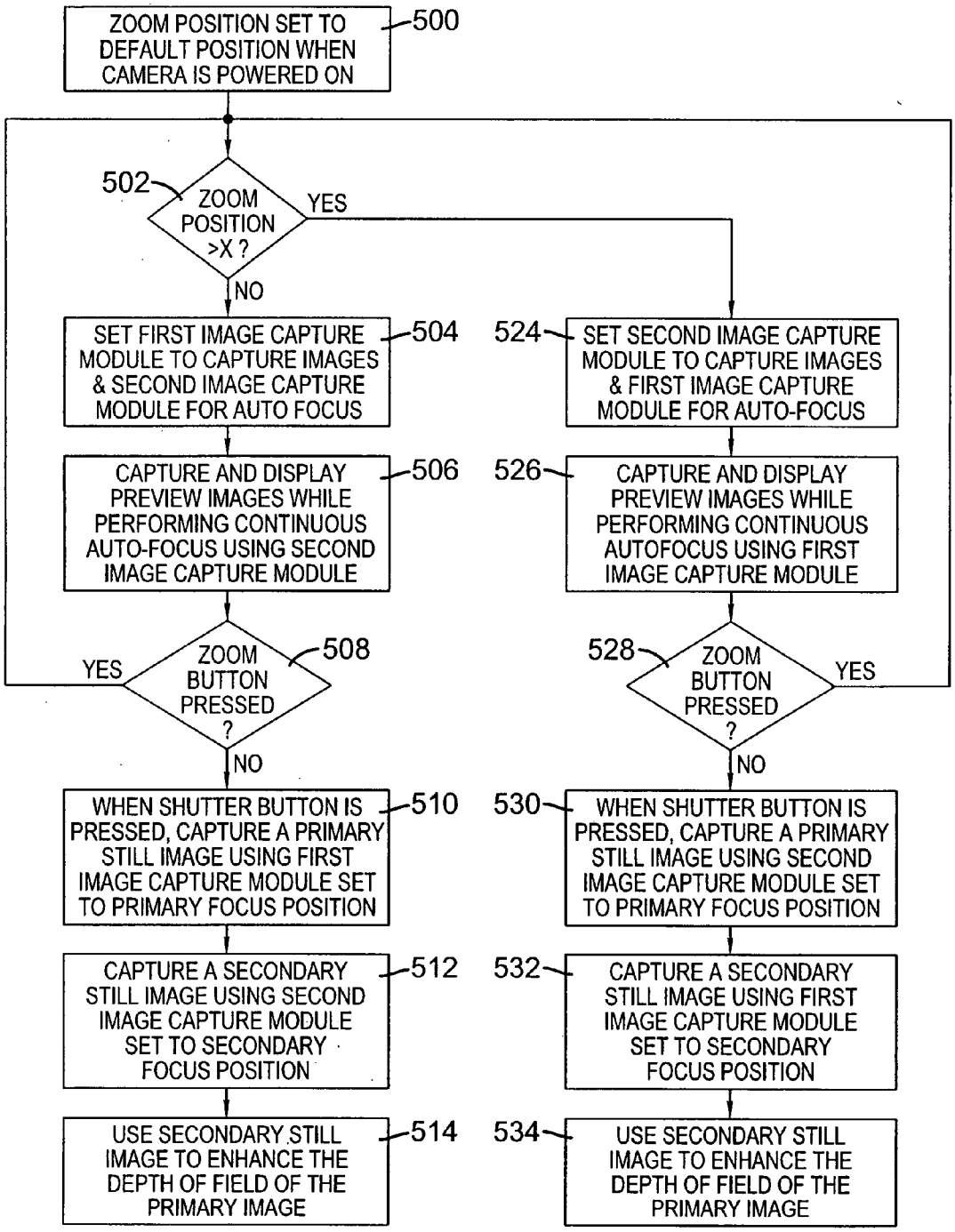
ZOOM POSITION SET TO DEFAULT POSITION WHEN CAMERA IS POWERED ON
500
502
ZOOM POSITION >X ?
YES
NO
SET FIRST IMAGE CAPTURE MODULE TO CAPTURE IMAGES & SECOND IMAGE CAPTURE MODULE FOR AUTO FOCUS
504
524
SET SECOND IMAGE CAPTURE MODULE TO CAPTURE IMAGES & FIRST IMAGE CAPTURE MODULE FOR AUTO-FOCUS
CAPTURE AND DISPLAY PREVIEW IMAGES WHILE PERFORMING CONTINUOUS AUTO-FOCUS USING SECOND IMAGE CAPTURE MODULE
506
526
CAPTURE AND DISPLAY PREVIEW IMAGES WHILE PERFORMING CONTINUOUS AUTOFOCUS USING FIRST IMAGE CAPTURE MODULE
YES
ZOOM BUTTON PRESSED ?
508
528
ZOOM BUTTON PRESSED ?
YES
NO
NO
WHEN SHUTTER BUTTON IS PRESSED, CAPTURE A PRIMARY STILL IMAGE USING FIRST IMAGE CAPTURE MODULE SET TO PRIMARY FOCUS POSITION
510
530
WHEN SHUTTER BUTTON IS PRESSED, CAPTURE A PRIMARY STILL IMAGE USING SECOND IMAGE CAPTURE MODULE SET TO PRIMARY FOCUS POSITION
CAPTURE A SECONDARY STILL IMAGE USING SECOND IMAGE CAPTURE MODULE SET TO SECONDARY FOCUS POSITION
512
532
CAPTURE A SECONDARY STILL IMAGE USING FIRST IMAGE CAPTURE MODULE SET TO SECONDARY FOCUS POSITION
USE SECONDARY STILL IMAGE TO ENHANCE THE DEPTH OF FIELD OF THE PRIMARY IMAGE
514
534
USE SECONDARY STILL IMAGE TO ENHANCE THE DEPTH OF FIELD OF THE PRIMARY IMAGE

FIG. 14

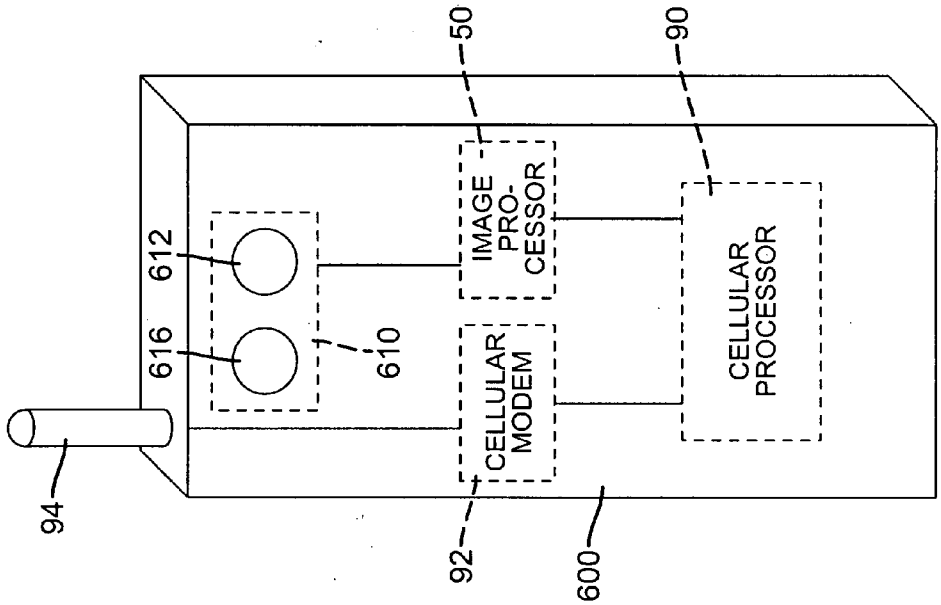

FIG. 15B

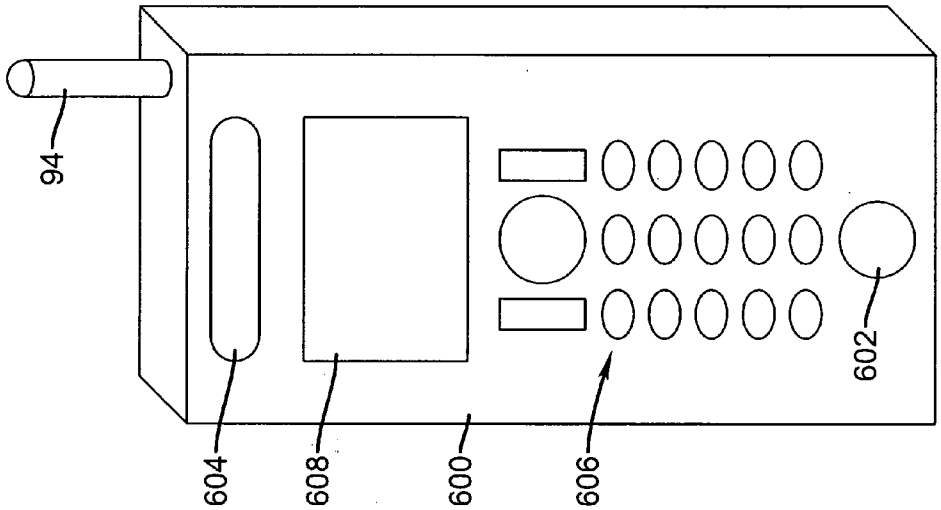

FIG. 15A

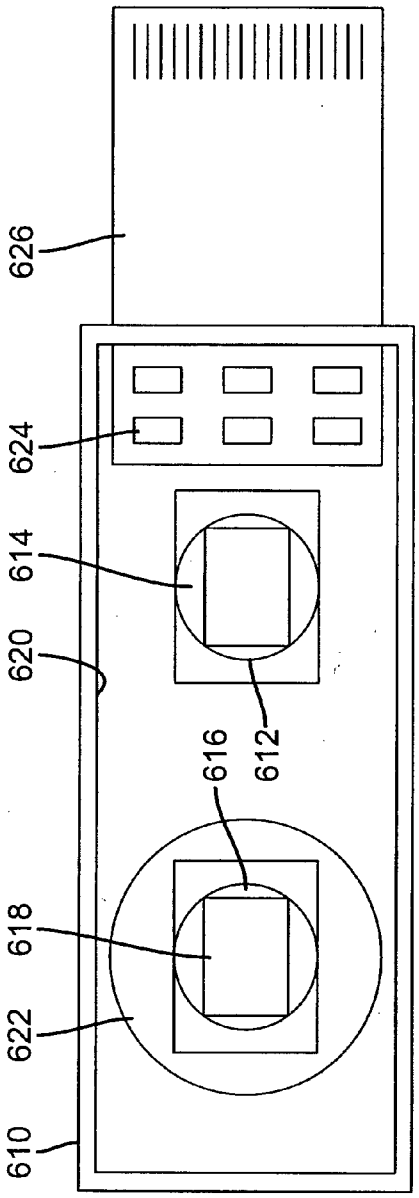

FIG. 16A

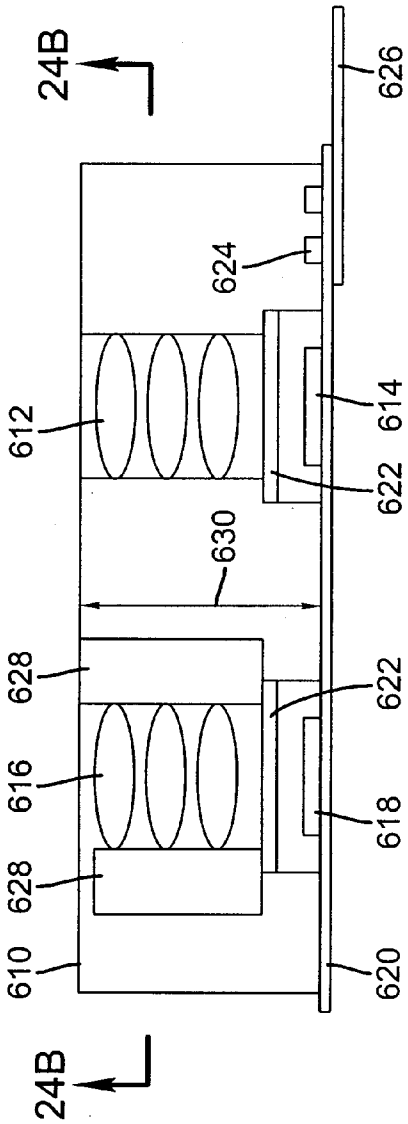

FIG. 16B

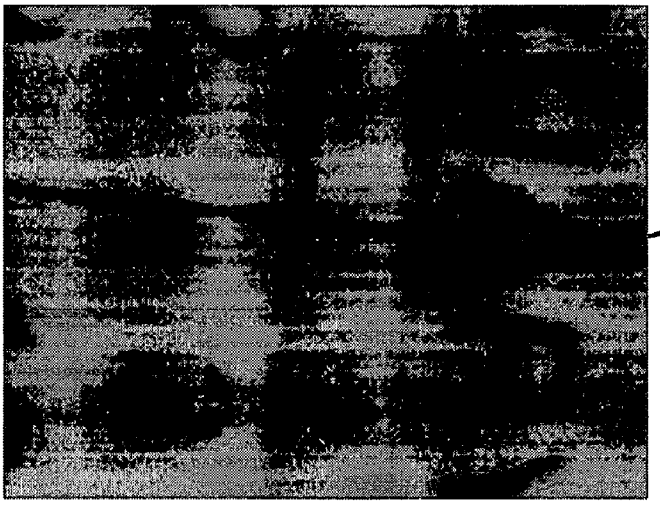

FIG. 17A

FIG. 17B

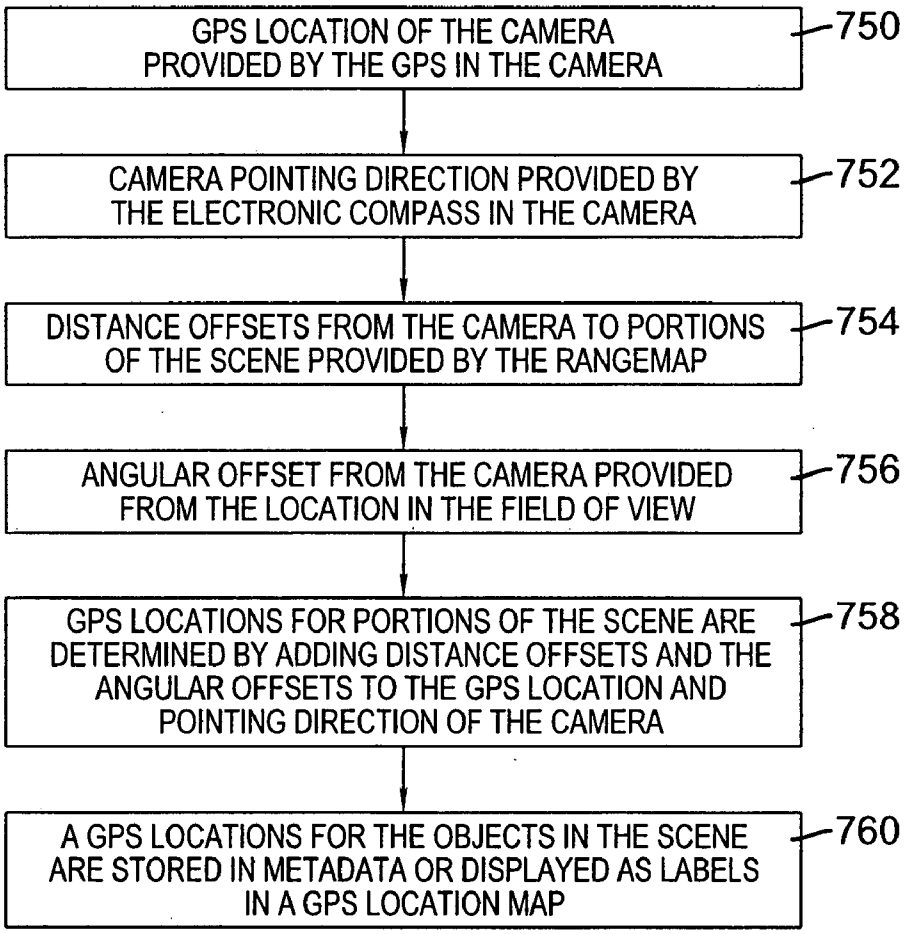
GPS LOCATION OF THE CAMERA PROVIDED BY THE GPS IN THE CAMERA
750
CAMERA POINTING DIRECTION PROVIDED BY THE ELECTRONIC COMPASS IN THE CAMERA
752
DISTANCE OFFSETS FROM THE CAMERA TO PORTIONS OF THE SCENE PROVIDED BY THE RANGEMAP
754
ANGULAR OFFSET FROM THE CAMERA PROVIDED FROM THE LOCATION IN THE FIELD OF VIEW
756
GPS LOCATIONS FOR PORTIONS OF THE SCENE ARE DETERMINED BY ADDING DISTANCE OFFSETS AND THE ANGULAR OFFSETS TO THE GPS LOCATION AND POINTING DIRECTION OF THE CAMERA
758
A GPS LOCATIONS FOR THE OBJECTS IN THE SCENE ARE STORED IN METADATA OR DISPLAYED AS LABELS IN A GPS LOCATION MAP
760

FIG. 18

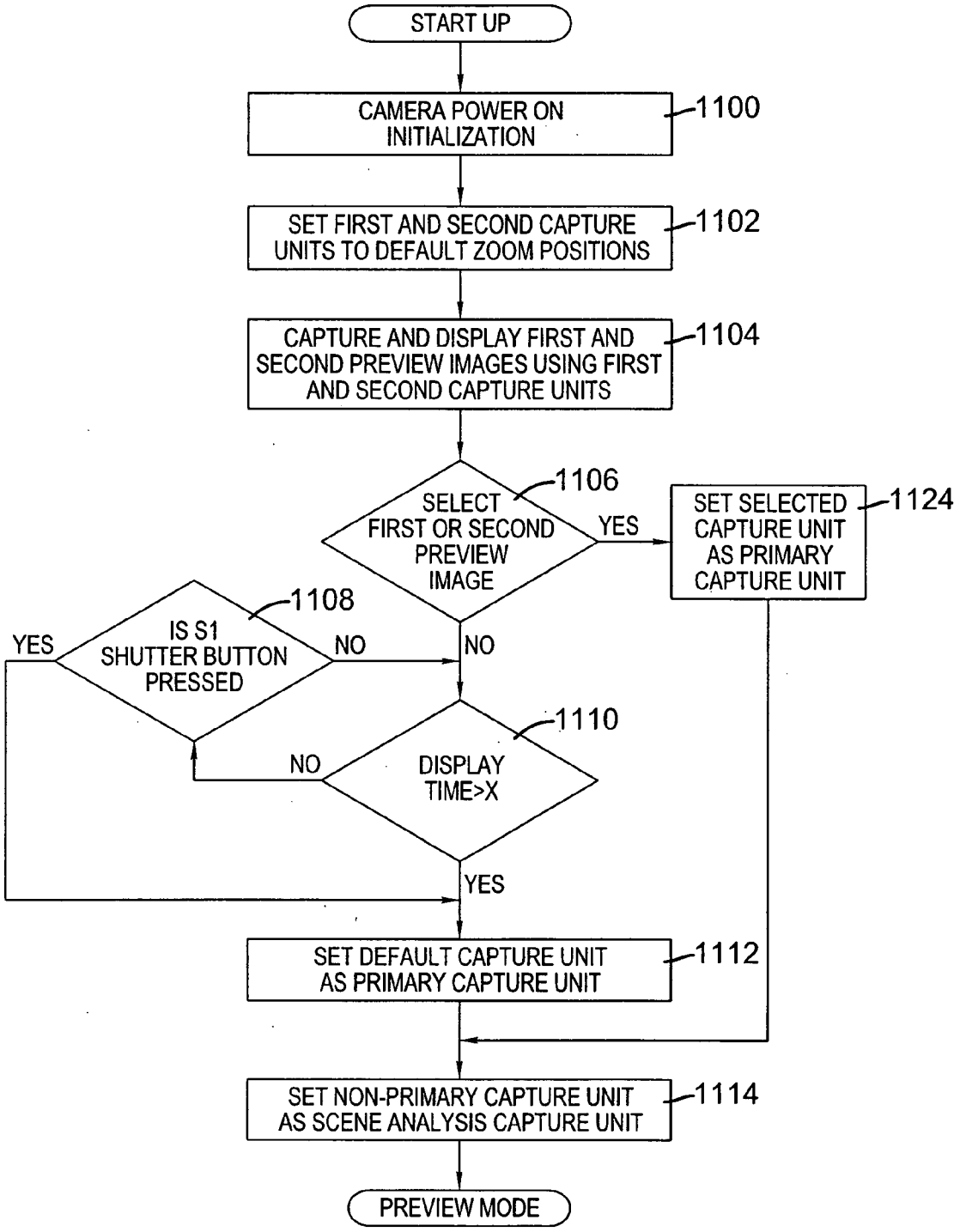
START UP
CAMERA POWER ON INITIALIZATION
1100
SET FIRST AND SECOND CAPTURE UNITS TO DEFAULT ZOOM POSITIONS
1102
CAPTURE AND DISPLAY FIRST AND SECOND PREVIEW IMAGES USING FIRST AND SECOND CAPTURE UNITS
1104
SELECT FIRST OR SECOND PREVIEW IMAGE
1106
YES
SET SELECTED CAPTURE UNIT AS PRIMARY CAPTURE UNIT
1124
IS S1 SHUTTER BUTTON PRESSED
1108
YES
NO
NO
DISPLAY TIME>X
1110
NO
YES
SET DEFAULT CAPTURE UNIT AS PRIMARY CAPTURE UNIT
1112
SET NON-PRIMARY CAPTURE UNIT AS SCENE ANALYSIS CAPTURE UNIT
1114
PREVIEW MODE

FIG. 19

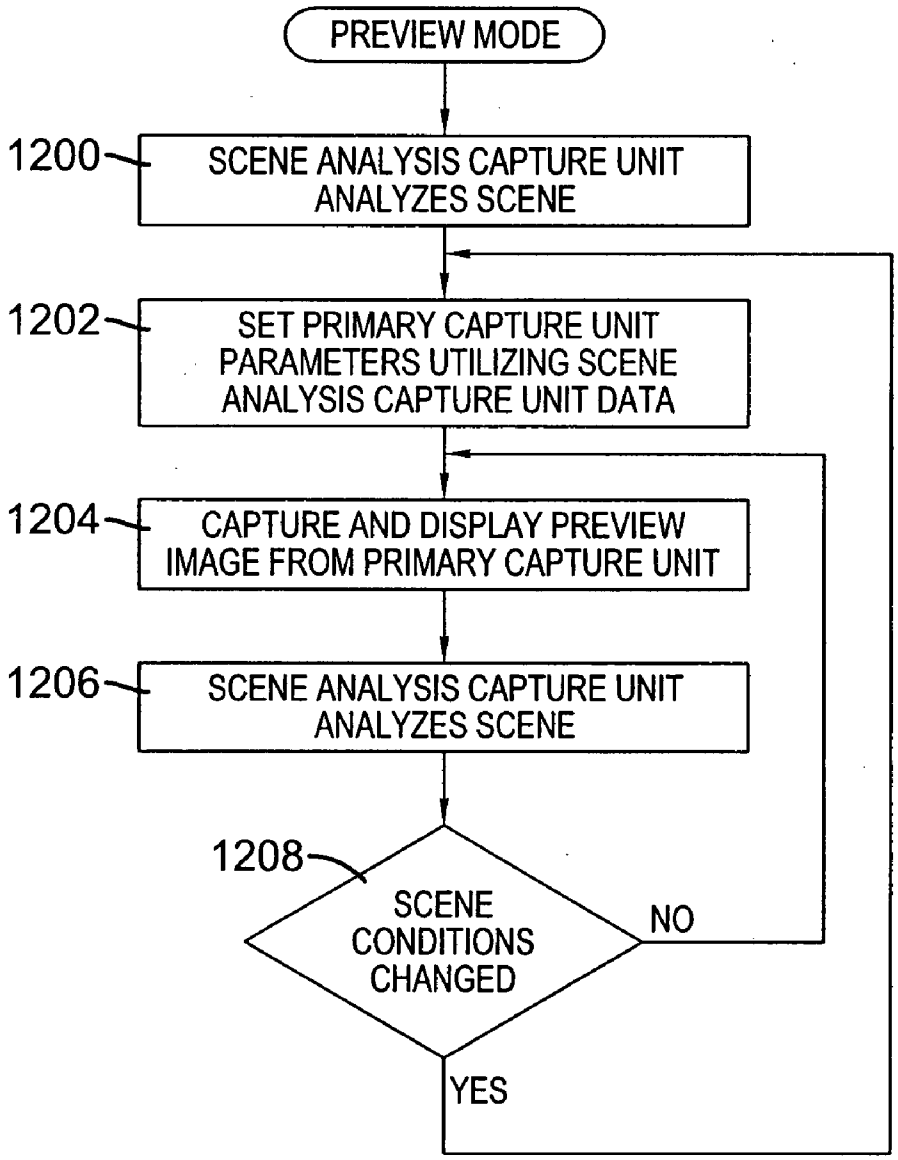
PREVIEW MODE
1200
SCENE ANALYSIS CAPTURE UNIT ANALYZES SCENE
1202
SET PRIMARY CAPTURE UNIT PARAMETERS UTILIZING SCENE ANALYSIS CAPTURE UNIT DATA
1204
CAPTURE AND DISPLAY PREVIEW IMAGE FROM PRIMARY CAPTURE UNIT
1206
SCENE ANALYSIS CAPTURE UNIT ANALYZES SCENE
1208
SCENE CONDITIONS CHANGED
NO
YES

FIG. 20

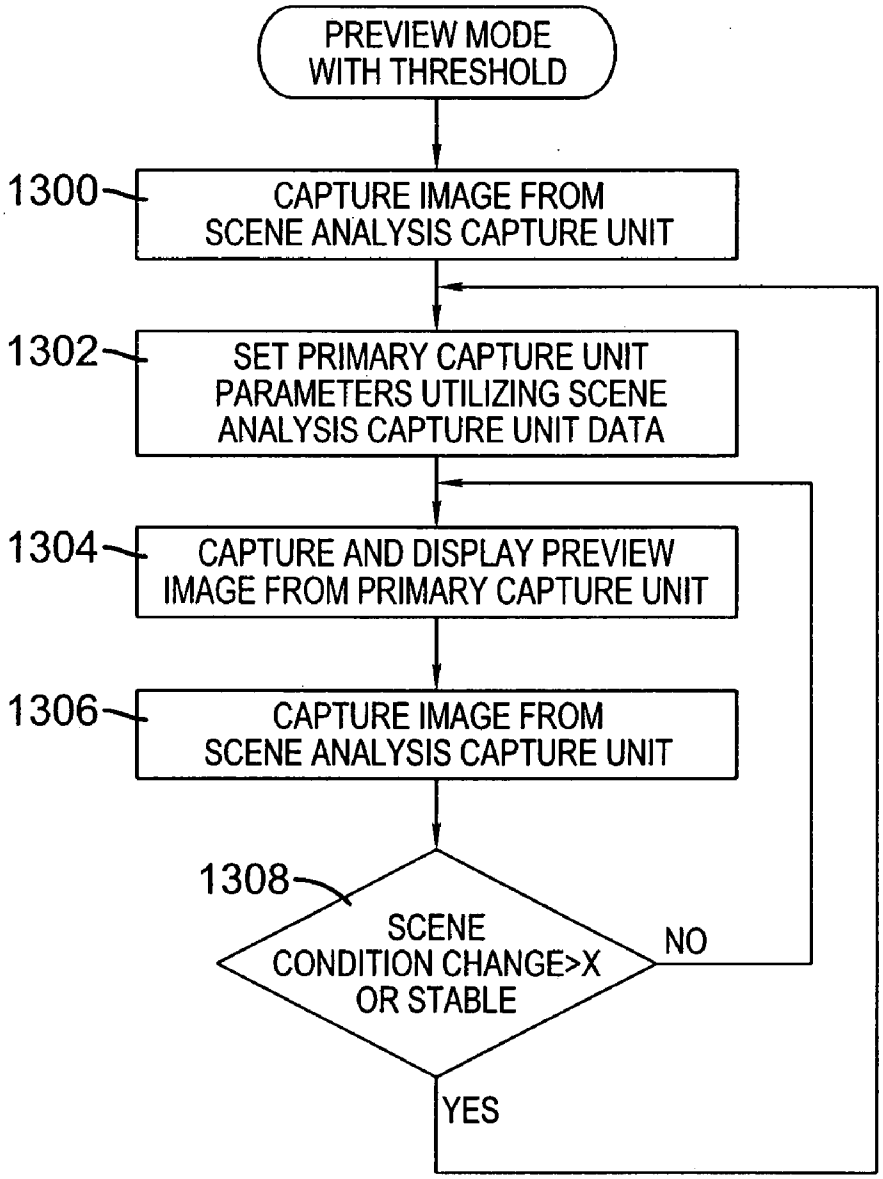
PREVIEW MODE WITH THRESHOLD
1300
CAPTURE IMAGE FROM SCENE ANALYSIS CAPTURE UNIT
1302
SET PRIMARY CAPTURE UNIT PARAMETERS UTILIZING SCENE ANALYSIS CAPTURE UNIT DATA
1304
CAPTURE AND DISPLAY PREVIEW IMAGE FROM PRIMARY CAPTURE UNIT
1306
CAPTURE IMAGE FROM SCENE ANALYSIS CAPTURE UNIT
1308
SCENE CONDITION CHANGE>X OR STABLE
NO
YES

FIG. 21

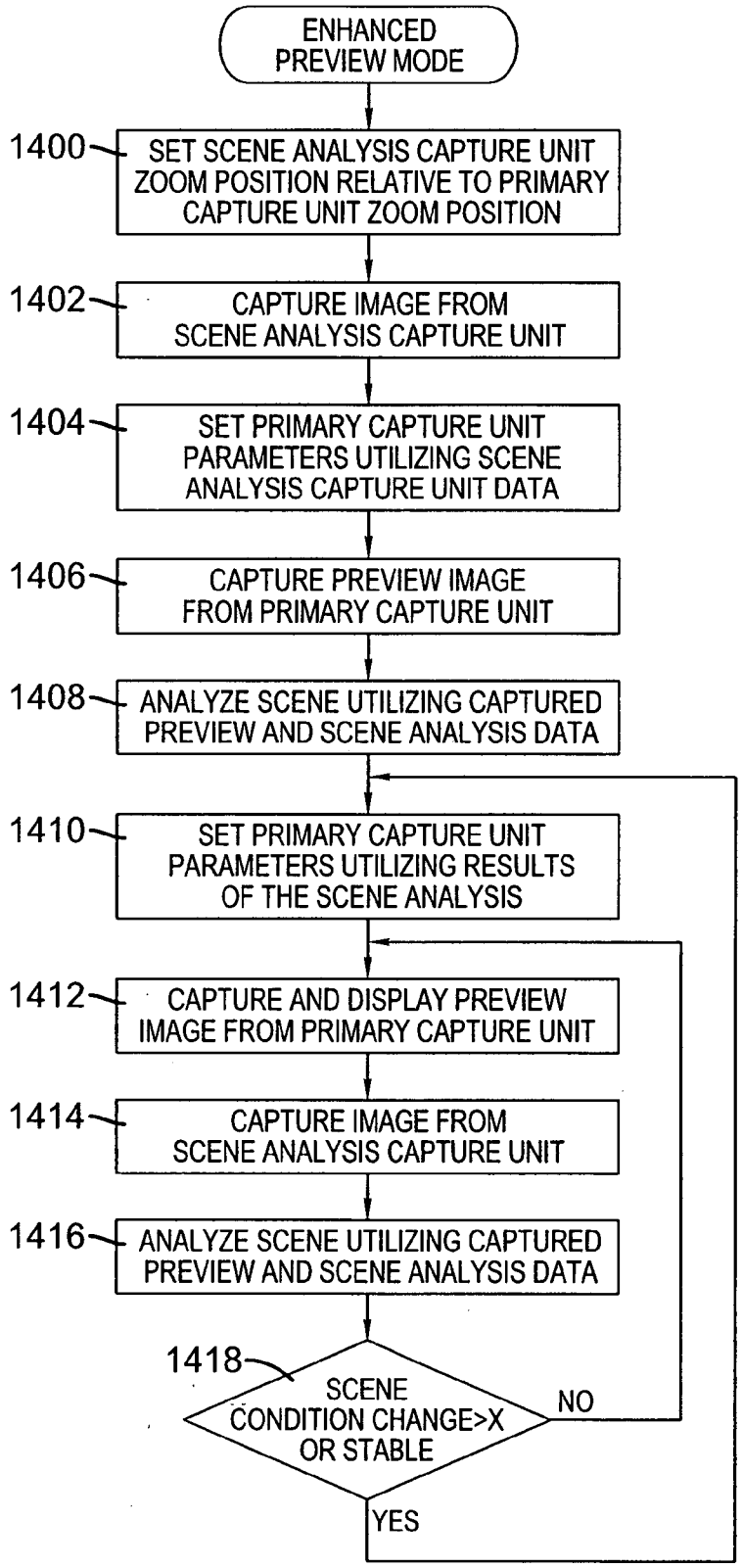
ENHANCED PREVIEW MODE
1400
SET SCENE ANALYSIS CAPTURE UNIT ZOOM POSITION RELATIVE TO PRIMARY CAPTURE UNIT ZOOM POSITION
1402
CAPTURE IMAGE FROM SCENE ANALYSIS CAPTURE UNIT
1404
SET PRIMARY CAPTURE UNIT PARAMETERS UTILIZING SCENE ANALYSIS CAPTURE UNIT DATA
1406
CAPTURE PREVIEW IMAGE FROM PRIMARY CAPTURE UNIT
1408
ANALYZE SCENE UTILIZING CAPTURED PREVIEW AND SCENE ANALYSIS DATA
1410
SET PRIMARY CAPTURE UNIT PARAMETERS UTILIZING RESULTS OF THE SCENE ANALYSIS
1412
CAPTURE AND DISPLAY PREVIEW IMAGE FROM PRIMARY CAPTURE UNIT
1414
CAPTURE IMAGE FROM SCENE ANALYSIS CAPTURE UNIT
1416
ANALYZE SCENE UTILIZING CAPTURED PREVIEW AND SCENE ANALYSIS DATA
1418
SCENE CONDITION CHANGE>X OR STABLE
NO
YES

FIG. 22

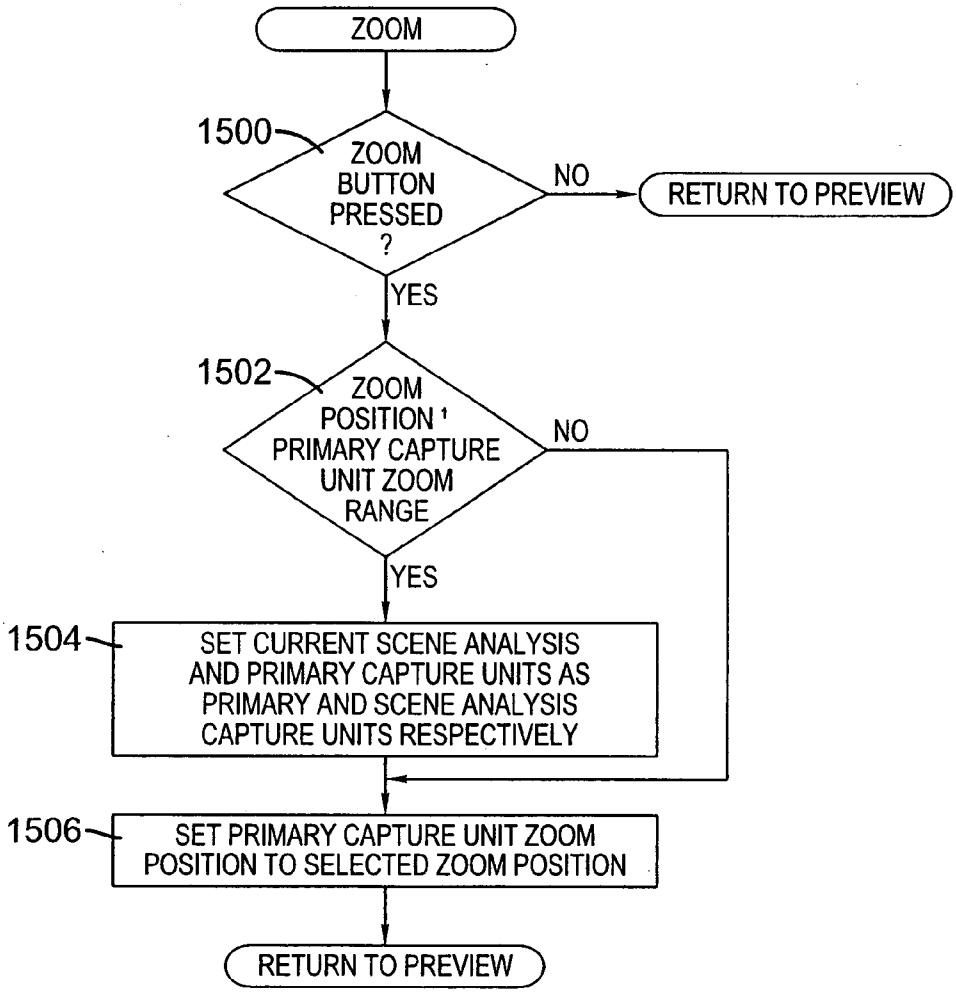
ZOOM
1500
ZOOM BUTTON PRESSED ?
NO
RETURN TO PREVIEW
YES
1502
ZOOM POSITION ¹ PRIMARY CAPTURE UNIT ZOOM RANGE
NO
YES
1504
SET CURRENT SCENE ANALYSIS AND PRIMARY CAPTURE UNITS AS PRIMARY AND SCENE ANALYSIS CAPTURE UNITS RESPECTIVELY
1506
SET PRIMARY CAPTURE UNIT ZOOM POSITION TO SELECTED ZOOM POSITION
RETURN TO PREVIEW

FIG. 23

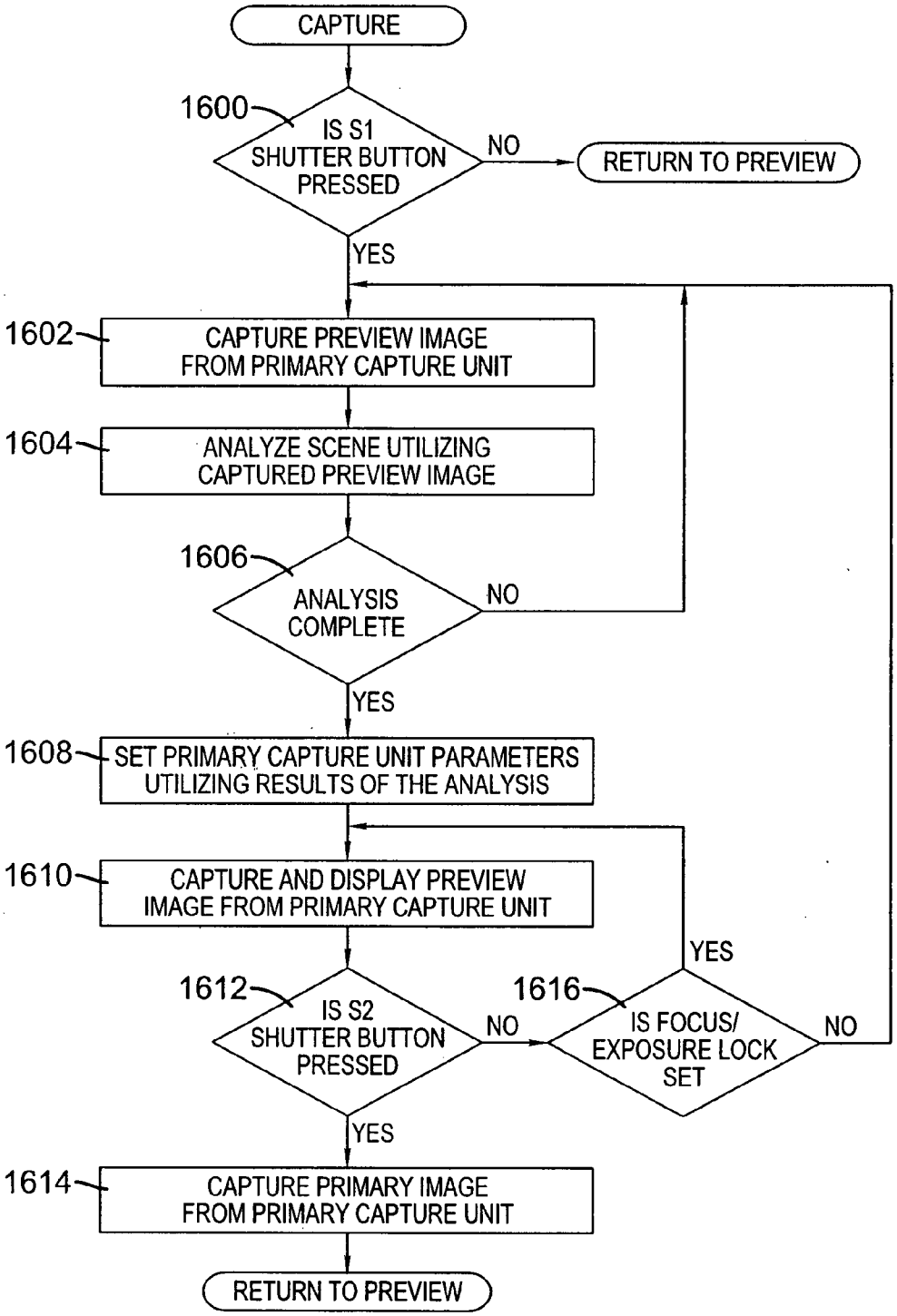
CAPTURE
1600
IS S1 SHUTTER BUTTON PRESSED
NO
RETURN TO PREVIEW
YES
1602
CAPTURE PREVIEW IMAGE FROM PRIMARY CAPTURE UNIT
1604
ANALYZE SCENE UTILIZING CAPTURED PREVIEW IMAGE
1606
ANALYSIS COMPLETE
NO
YES
1608
SET PRIMARY CAPTURE UNIT PARAMETERS UTILIZING RESULTS OF THE ANALYSIS
1610
CAPTURE AND DISPLAY PREVIEW IMAGE FROM PRIMARY CAPTURE UNIT
YES
1612
IS S2 SHUTTER BUTTON PRESSED
NO
1616
IS FOCUS/ EXPOSURE LOCK SET
NO
YES
1614
CAPTURE PRIMARY IMAGE FROM PRIMARY CAPTURE UNIT
RETURN TO PREVIEW

FIG. 24

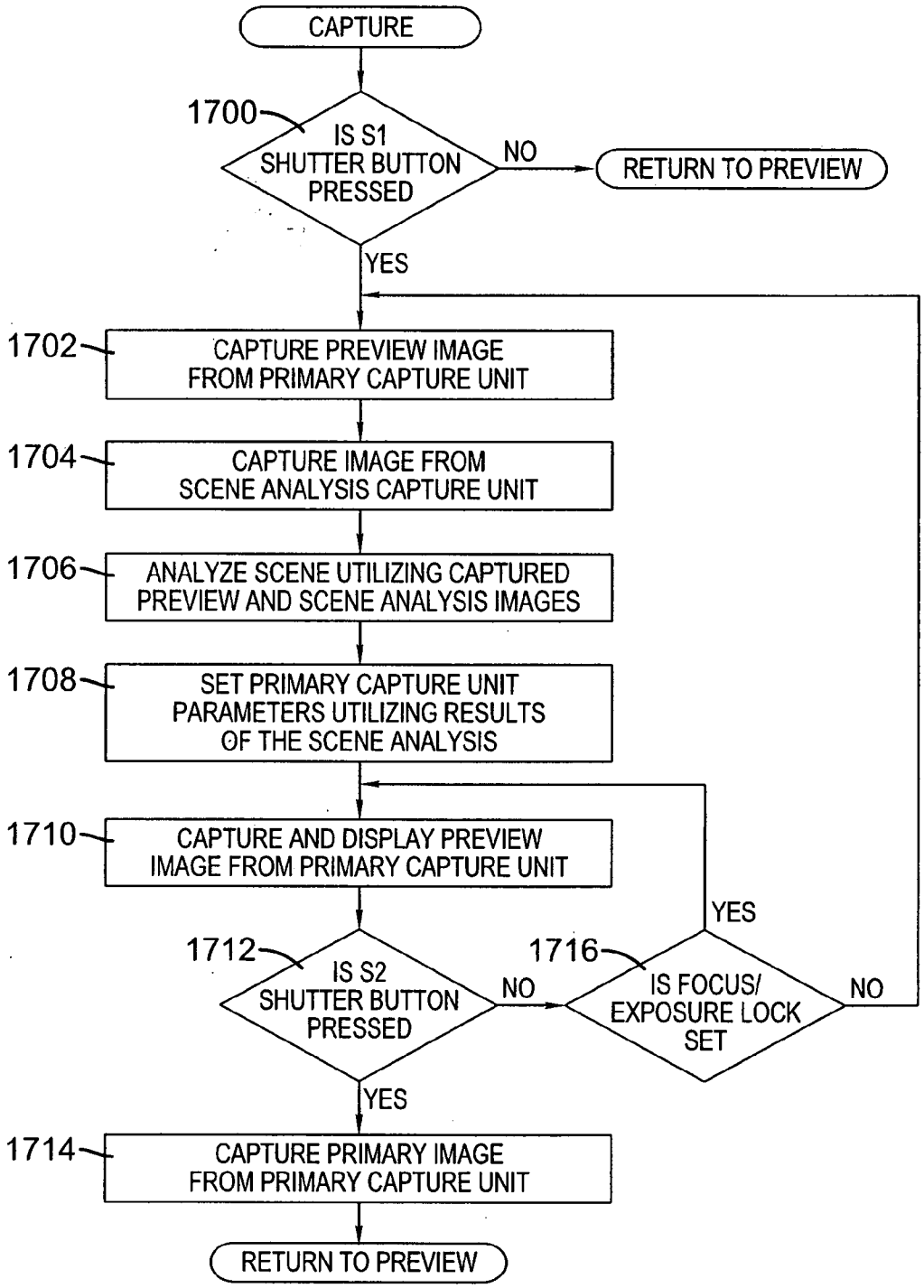
CAPTURE
1700
IS S1 SHUTTER BUTTON PRESSED
NO
RETURN TO PREVIEW
YES
1702
CAPTURE PREVIEW IMAGE FROM PRIMARY CAPTURE UNIT
1704
CAPTURE IMAGE FROM SCENE ANALYSIS CAPTURE UNIT
1706
ANALYZE SCENE UTILIZING CAPTURED PREVIEW AND SCENE ANALYSIS IMAGES
1708
SET PRIMARY CAPTURE UNIT PARAMETERS UTILIZING RESULTS OF THE SCENE ANALYSIS
1710
CAPTURE AND DISPLAY PREVIEW IMAGE FROM PRIMARY CAPTURE UNIT
YES
1712
IS S2 SHUTTER BUTTON PRESSED
NO
1716
IS FOCUS/ EXPOSURE LOCK SET
NO
YES
1714
CAPTURE PRIMARY IMAGE FROM PRIMARY CAPTURE UNIT
RETURN TO PREVIEW

FIG. 25

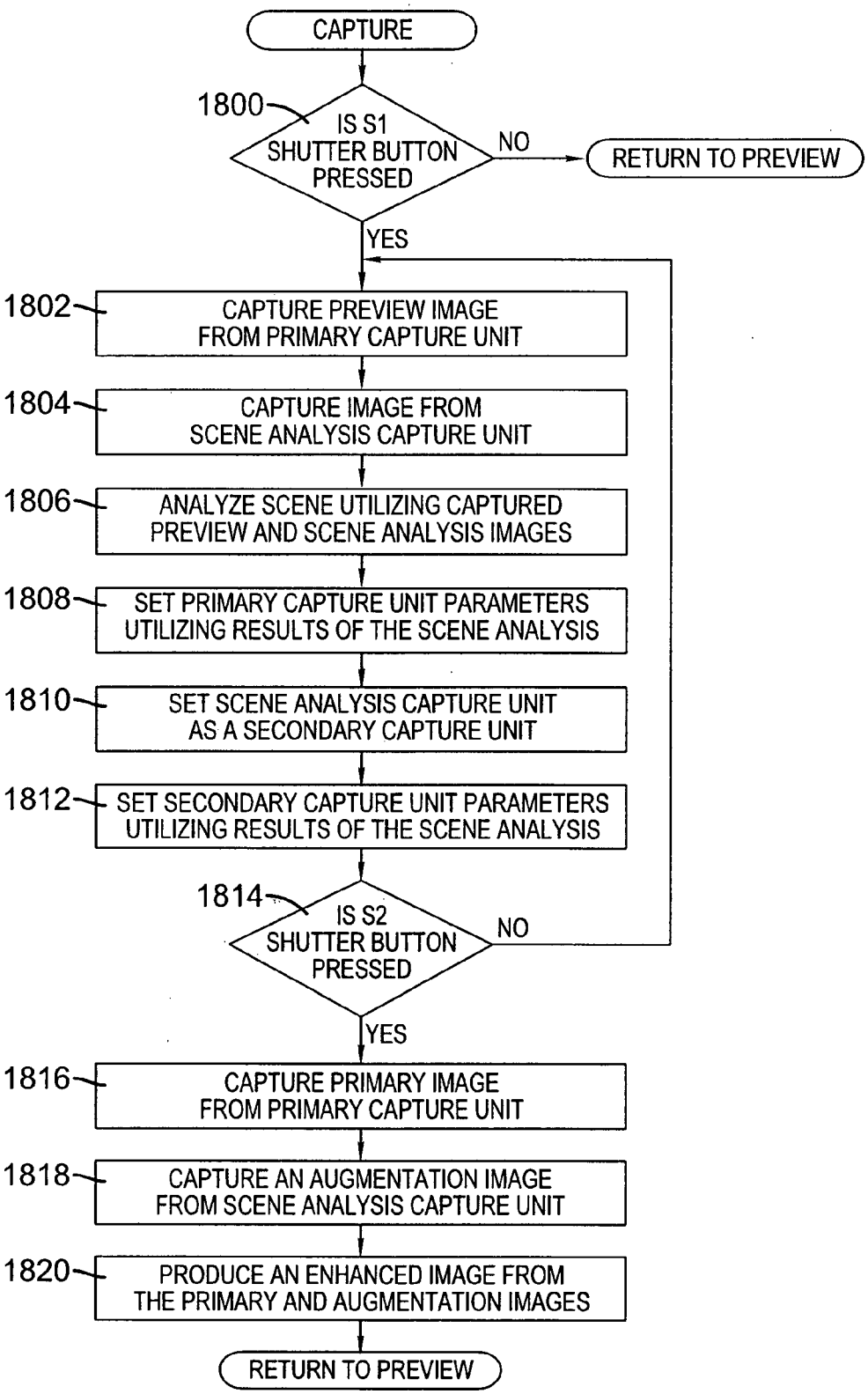
CAPTURE
1800
IS S1 SHUTTER BUTTON PRESSED
NO
RETURN TO PREVIEW
YES
1802
CAPTURE PREVIEW IMAGE FROM PRIMARY CAPTURE UNIT
1804
CAPTURE IMAGE FROM SCENE ANALYSIS CAPTURE UNIT
1806
ANALYZE SCENE UTILIZING CAPTURED PREVIEW AND SCENE ANALYSIS IMAGES
1808
SET PRIMARY CAPTURE UNIT PARAMETERS UTILIZING RESULTS OF THE SCENE ANALYSIS
1810
SET SCENE ANALYSIS CAPTURE UNIT AS A SECONDARY CAPTURE UNIT
1812
SET SECONDARY CAPTURE UNIT PARAMETERS UTILIZING RESULTS OF THE SCENE ANALYSIS
1814
IS S2 SHUTTER BUTTON PRESSED
NO
YES
1816
CAPTURE PRIMARY IMAGE FROM PRIMARY CAPTURE UNIT
1818
CAPTURE AN AUGMENTATION IMAGE FROM SCENE ANALYSIS CAPTURE UNIT
1820
PRODUCE AN ENHANCED IMAGE FROM THE PRIMARY AND AUGMENTATION IMAGES
RETURN TO PREVIEW

FIG. 26

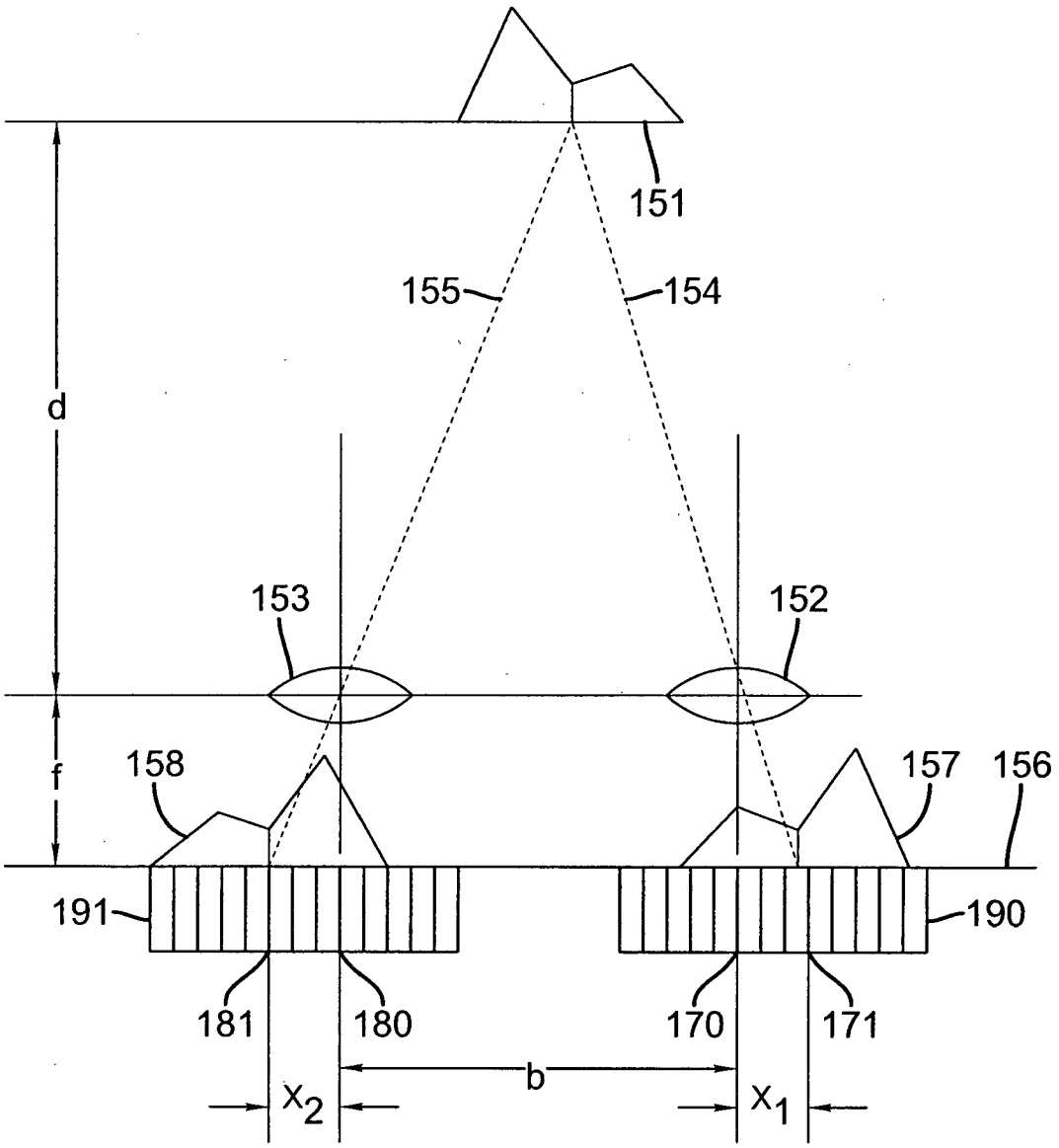

FIG. 27
(PRIOR ART)

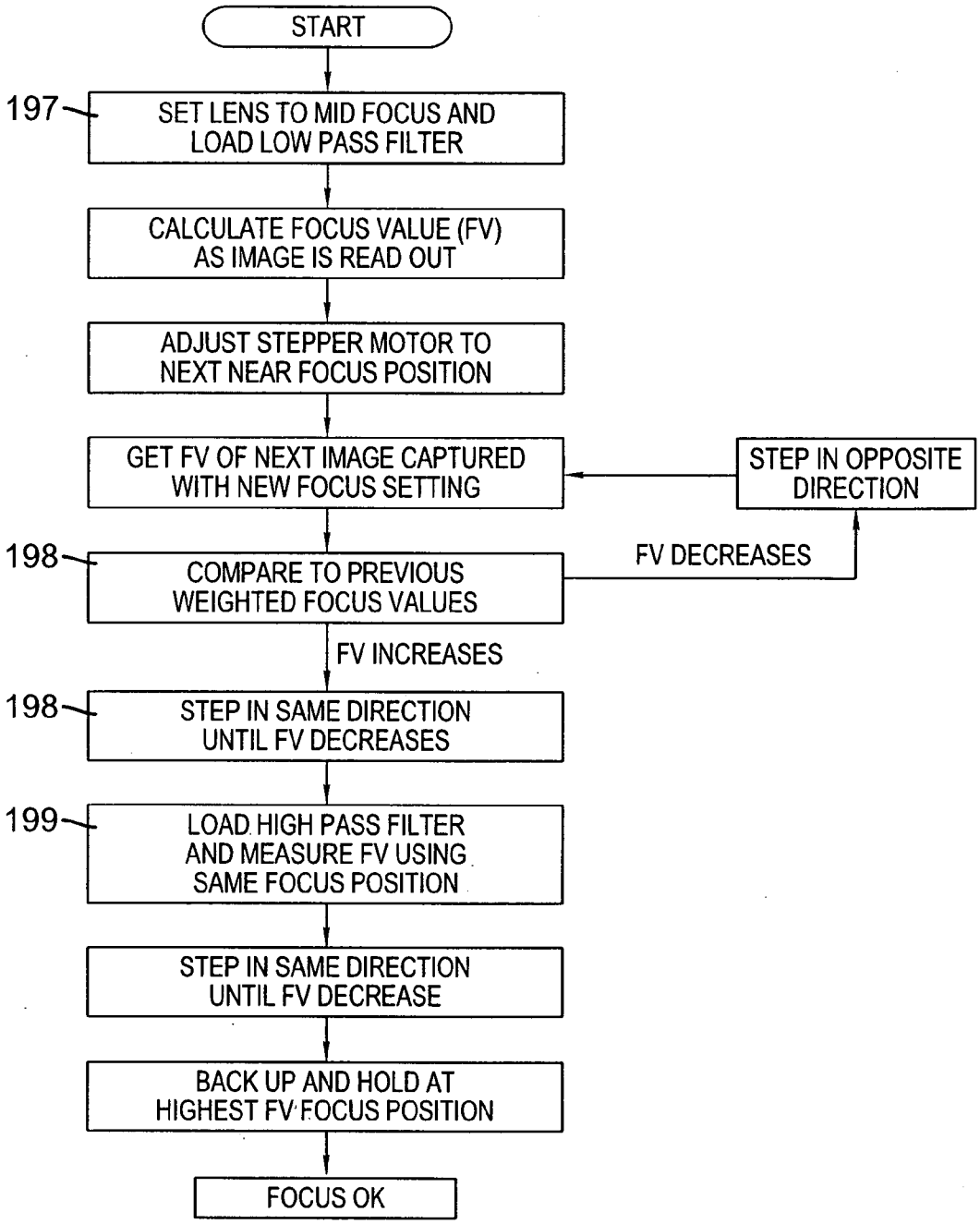

FIG. 28
(PRIOR ART)

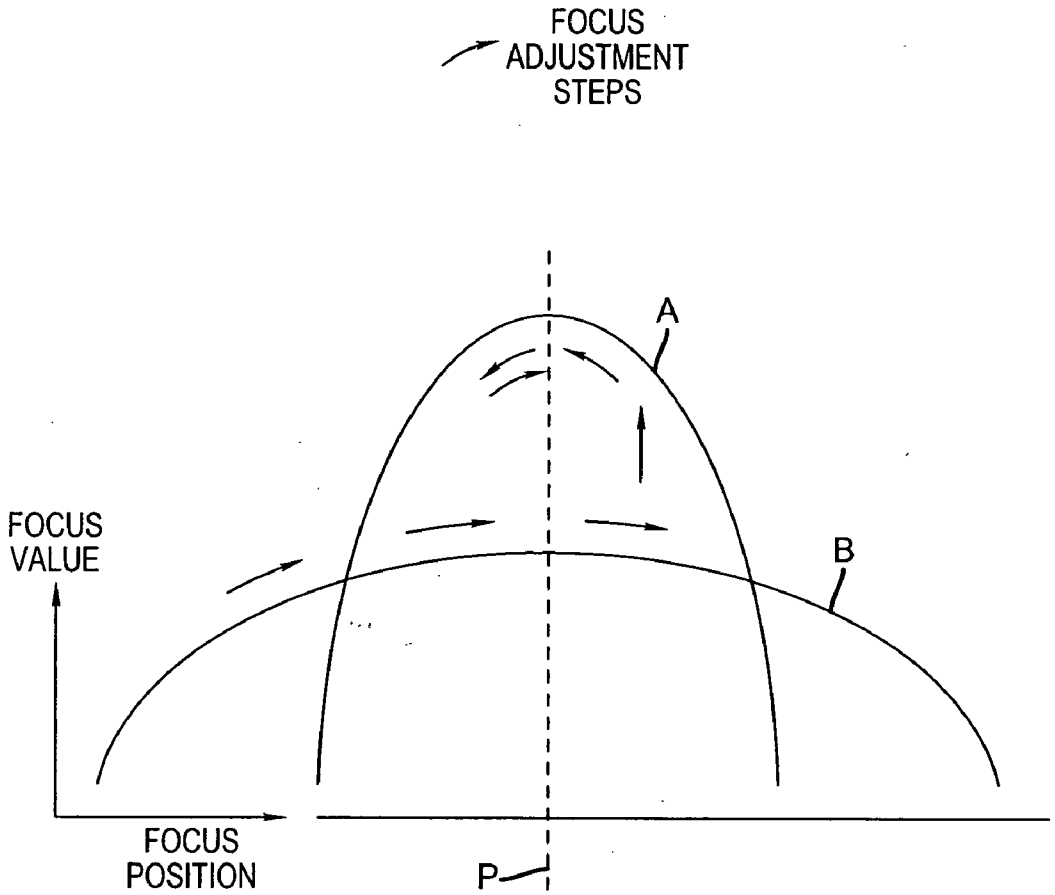

FIG. 29
(PRIOR ART)

METHOD AND APPARATUS FOR OPERATING A DUAL LENS CAMERA TO AUGMENT AN IMAGE

FIELD OF THE INVENTION

[0001] The present invention relates to a digital camera that produces digital image files and, more particularly, to a digital camera that uses multiple lenses and image sensors to provide an improved imaging capability.

BACKGROUND OF THE INVENTION

[0002] Currently, most digital cameras use a zoom taking lens and a single color image sensor to capture still and motion images. The captured images are then processed to produce digital image files, which are stored in a digital memory in the camera. The digital image files can then be transferred to a computer, displayed, printed, and shared via the Internet.

[0003] In order to capture sharp images of moving subjects, a digital camera needs to provide a precise automatic lens focusing system (i.e., an autofocus system). The autofocus system must be capable of quickly obtaining the correct focus in order to minimize the "shutter delay" between the time the shutter button is pressed and the still image is captured. The autofocus system must also work in a continuous image capture mode wherein video images are captured. For instance, in a video mode the focus should be adjusted in real-time while video images are being continuously captured.

[0004] Many digital cameras and scanners capture images using an image sensor and a taking lens system with an adjustable focus. Typically, the focus distance of such an adjustable focus taking lens system can automatically be set to one of a plurality of different settings by sensing, control, and drive systems, which are adapted to provide optimal focus of what is determined to be a subject area in a scene. Lens systems that provide automatically adjustable focus settings based on a focus measurement and an adjustable focus lens are referred to herein as autofocus systems. Digital cameras typically use one of two types of autofocus systems: a rangefinder system and a "through-the-lens" focus system.

[0005] A rangefinder system uses rangefinding sensors such as a sonic rangefinder or a dual lens rangefinder to determine the distance from a camera to one or more portions of a scene within a field of view of the rangefinder system. A sonic rangefinder measures the phase offset between a projected sonic signal and a reflected sonic signal to infer the distance to objects in the scene. Dual lens rangefinders contain two lenses that are separated by a distance along with two matching sensor areas that capture matched pairs of images. Dual lens rangefinders are commonly used on digital cameras in the form of dual lens rangefinder modules which contain two lenses separated by a distance along with two matching sensor areas that capture matched pairs of low resolution images.

[0006] Common dual lens rangefinder-based autofocus systems include active and passive systems. Active systems actively project light onto the scene, while passive systems work with the available light from the scene. Dual lens rangefinder modules can be purchased from Fuji Electric in several models such as the FM6260W. A dual lens rangefinder module for optical apparatus such as a camera is described in U.S. Pat. No. 4,606,630, which was issued to Haruki et al. on Aug. 19, 1986 (and assigned to Fuji Electric). According to the description of the prior art in this patent, matched pairs of low resolution images are analyzed for correlation between the two images to determine the offset between the two images caused by the separation between the two lenses.

[0007] A diagram illustrative of the principle of the operation of a conventional rangefinder is shown herein in FIG. **27**. In that diagram, light from an object **151** is incident on two small lenses **152** and **153** which have a sufficiently short focal length f that light rays received from the object through different spaced paths **154** and **155** produce corresponding spaced images **157** and **158** in a focal plane **156** which is common to the lenses **152** and **153**. When the object **151** is at an infinite distance, the centers of the images **157** and **158** are located at reference positions **170** and **180** in FIG. **27**, but when the object **151** is located at a closer distance, the centers of the images are shifted apart to positions **171** and **181**. If the distance by which the images **157** and **158** are shifted from the reference positions **170** and **180** are designated x_1 and x_2, respectively, then the total shift x may be expressed as follows:

$$x=x_1+x_2=b\cdot f/d$$

Thus, the distance d to the object **151** can be measured by $d=b\cdot f/x$. In this case, b is the distance between the optical axes of the small lenses, that is, the base length. To obtain the shifted amounts x_1 and x_2, or the sum x of both, two optical sensor arrays **190** and **191** are provided in the focal plane **156** as shown in FIG. **27**. These optical sensor arrays each comprise a plurality of optical sensors, for instance CCD devices, and an analog photoelectric signal is generated by each optical sensor corresponding to the light intensity at the portion of the image which is incident on the sensor. Haruki et al. shows a conventional circuit, as well as a higher speed rangefinding circuit according to the patent, for obtaining the sum x of the shifted distances by comparing two image signal trains comprising the digital image signals from the left and right optical sensor arrays.

[0008] Basically, the offset information x is used along with the lens separation distance b and the focal length f to calculate the distanced to the scene by triangulation. The calculated distance d to the scene is used to guide the positioning of an adjustable focus lens to produce the best image quality. As known in the prior art, this adjustment may be based on a calibration curve established between the distance to the scene as measured by the dual lens rangefinder module and a series of best focused images as produced by a "through the lens" autofocus system. The calibration curve is stored as an equation or a look-up table in a microprocessor in the camera.

[0009] Rangefinder-based autofocus systems have the advantage of being very fast, some having a response time that can be in the range of 0.01-0.05 second. However, the focus quality produced by some rangefinder-based autofocus systems can vary when they are used in different operating conditions. For example, sonic autofocus systems cannot focus through a glass window as the glass stops the projected sonic signal, thereby causing the autofocus system to focus onto the glass. In the case of a dual lens rangefinder autofocus system, the accuracy of dual lens rangefinders are typically influenced by changes in environmental conditions such as temperature and/or humidity. The problem with dual lens rangefinder modules is that the calibration between the dual lens rangefinder module and the adjustable focus lens position is not stable within the normal operating environment for

digital cameras. Environmental conditions such as changes in temperature and humidity can cause the distance to the portion of the scene as measured by the dual lens rangefinder module to change by over 10%. In addition, the measured position of the adjustable focus taking lens in the adjustable focus taking lens system is prone to environmentally induced changes as well so that inaccuracies are produced in the control system for the adjustable focus lens. Consequently, dual lens rangefinder modules are not typically used independently for autofocus in digital cameras but instead are used as a rough focus adjustment that is supplemented by a "through the lens" autofocus system.

[0010] Alternatively, the "through-the-lens" autofocus system determines a focus state through an analysis of a series of autofocus images captured with the adjustable focus lens system positioned at a plurality of different focus distances. For example, in a typical "through-the-lens" autofocus system a plurality of autofocus images (e.g., 5-20) are captured with the adjustable focus lens in a series of different positions in a so-called "hill climb" method. This type of autofocus is known as "hill climbing" autofocus because it generates a sequence of values that increase in level until they pass over a peak, i.e., a "hill". In other words, the lens focus position is adjusted automatically until the contrast of the edge detail in the image, or a particular area of the image, is maximized. For instance, the contrast present in each of the autofocus images is compared and the autofocus image with the greatest contrast is deemed to have been captured with the best focus conditions (often the best focus lens position is further refined by interpolating the contrast values between images).

[0011] In order to decrease focusing response time without sacrificing focusing precision, it is common to use filters to separate not only the higher frequency component of the video signal, but also the lower frequency component. For example, a lens may be quickly driven in coarse adjustment steps in a low frequency range furthest from the maximum focus, and then driven in finer adjustment steps in a high frequency range nearer to the maximum focus. A flow diagram of a conventional "hill climbing" contrast autofocus algorithm is shown in FIG. **28**. This algorithm uses the "hill climbing" contrast autofocus method discussed above and shown in the diagram of FIG. **29**, which illustrates the relationship between the focus value obtained from the filters and the lens position. In FIG. **29**, the abscissa indicates the focusing position of a lens along a distance axis, the ordinate indicates the focusing evaluation value, and the curves A and B indicate the focusing evaluation values for high and low frequency components, respectively, relative to a particular in-focus position P.

[0012] Referring to the flow diagram of FIG. **28**, the best starting point for the algorithm depends on the hyperfocal distance of the current lens setting, which is a function of the focal length setting and the f-number. A distance of about 2 meters is typically a good starting point. Then a low frequency bandpass filter is loaded (stage **197**) and the focus values are read out. The algorithm employs a comparison stage **198** to set the direction of lens adjustment toward increasing focus values, and to determine when the lens is stepped over the "hill". The depth of field, which depends on the present focal length and f-number, sets the number of steps, i.e., the next near focus position, which should be taken before capturing the next frame when using the low frequency bandpass filter. Once the peak of the hill is passed (curve B in FIG, **29**), a high frequency bandpass filter is loaded (stage **199**), and the lens is moved in the opposite direction until the peak of the higher "hill" is found (curve A in FIG. **29**). The peak focus value may use either the weighted average or peak value from numerous pixels.

[0013] "Through-the-lens" autofocus systems are very accurate since they measure focus quality directly from autofocus images captured with the high quality taking lens. Unfortunately, "through-the-lens" autofocus systems can be relatively slow in determining a focus setting due to the large number of autofocus images that must be captured and compared. For example, "through-the-lens" autofocus systems can take as long as 0.5-2.0 seconds to determine focus conditions.

[0014] Accordingly, in some digital cameras, the two types of autofocus systems are used together in a hybrid system in which the rangefinder based autofocus system is used to provide a fast estimation of the adjustable focus lens location that is then followed by the use of the "through-the-lens" autofocus system to refine the focus setting. For example, U.S. Pat. No. 6,864,474, entitled "Focusing Apparatus for Adjusting Focus of an Optical Instrument" and which issued Mar. 8, 2005 in the name of Misawa, describes the coordinated use of a rangefinder-based autofocus system with a "through-the-lens" autofocus system. In Misawa, the focus position of the adjustable focus taking lens is determined by both the rangefinder-based autofocus system and the "through-the-lens" autofocus system. The difference between the adjustable focus taking lens position determined by the rangefinder-based autofocus system and the adjustable focus taking lens position determined by the "through-the-lens" autofocus system is stored for future reference. In subsequent image capture episodes, the stored difference information is used to refine the number of autofocus images captured and analyzed by the "through-the-lens" autofocus system in the "hill climb" method to determine the adjustable focus lens position for best focus, thereby reducing the number of autofocus images captured and processed in cases where the rangefinder system is accurate and increasing the number of autofocus images captured and processed in cases where the rangefinder is inaccurate. However, the method described by Misawa assumes that the performance of the rangefinder, adjustable focus taking lens system and control system are consistent over time, do not fluctuate with variations in environmental conditions, and do not otherwise change or drift over time.

[0015] Once an image is in focus, the "hill climb" method typically operates over incremental distances near the subject presently focused upon. Then, in refocusing an image, the "hill climb" method typically determines whether any lens movement is stepping "up or down the hill" and resets the lens for a new maximum. In practice, this means that, if the lens movement is stepping "down the hill", the lens motion is immediately reversed so as to seek the new maximum for the existing subject. This is a particular problem in video focusing, where a new subject at some distance away from the present subject may come into the image and never be detected by the "hill climb" method—even where the new subject may present a greater "hill" in terms of contrast values. One way of responding to this problem is referred to as "whole way" autofocusing, where the auto focus module looks over all the distances discernible by the taking lens before deciding upon a focus position.

[0016] Commonly assigned U.S. Pat. No. 6,441,855 describes a "whole-way" autofocusing method, where a

focusing device includes a movable focusing lens adapted to be moved to different positions across the entire focusing range, a conversion element for converting light incident on and transmitted through the focusing lens into a signal, and a lens driving mechanism for moving the focusing lens. The focusing device further includes a focus evaluation value calculation unit for calculating a focus evaluation value for each position of the focusing lens based on the signal from the conversion element. The focus evaluation value calculation unit extracts only the signals corresponding to the pixels in a focus area defined, e.g., at the center of an image, which is further divided into nine "tiles", that is, blocks that are obtained by dividing the focus area into a small number of rows and columns used as observation areas.

[0017] In calculating the focus evaluation values, a determination is first made as to whether or not the calculation of the focus evaluation values has been repeated a certain number of times, e.g., ten times, for different distance settings. When the determination is negative, the focusing lens is moved by a preset step width, and the calculation is repeated. Thus, the focusing lens is always moved stepwise from an infinite far position to a nearest position, and for each step of movement, a focus evaluation value is calculated for each tile. These calculations are performed for the respective tiles, to thereby obtain the focus evaluation values for ten lens positions for each of the nine tiles, including all of the peaks that are found across the total distance. Using the ten total sums obtained for the respective lens positions as the focus evaluation values, the focusing lens position producing the maximum peak is determined as the in-focus lens position. A lens driving output is then applied to the lens driving mechanism so that the lens moves to the determined in-focus position.

[0018] In order to provide a small size digital camera with a large "optical zoom range", a digital camera can use multiple image sensors with different focal length lenses, as described in commonly assigned U.S. patent application Ser. No. 11/062,174, entitled "Digital Camera Using Multiple Lenses and Image Sensors to Provide an Improved Zoom Range", which was filed Feb. 18, 2005 in the names of Labaziewicz et al., the disclosure of which is incorporated herein by reference. For example, the Kodak Easyshare V610 dual lens digital camera includes a 38-114 mm (35 mm equiv.) f/3.9-f/4.4 lens and a 130-380 mm (35 mm equiv.) f/4.8 lens, in order to provide a 10× optical zoom range. However, in both this patent application and product, only one of the two image sensors is used at a time. The two image sensors do not simultaneously capture images.

[0019] U.S. Patent Application Publication No. US 2003/0020814, which was published Jan. 30, 2003, discloses an image capturing apparatus having a plurality of capturing optical systems, each coupled to a CCD image sensor, including a first system having a shorter focal length and a second system having a longer focal length. In the various embodiments described in this disclosure, the two lenses can provide different focal lengths ranges, including one system with a fixed-focus lens and the other system with a zoom lens, or they can both be fixed focus lenses set to two different focus distance settings. In each case, rather than obtaining user input, a selection unit automatically selects the capture signals from one of the capturing optical systems based on capture conditions, such as measured distance or luminance, determined by a capture condition acquiring unit. The autofocus for these systems is provided using a separate distance sensor. Neither of the two CCD image sensors are used for the autofocusing operation.

[0020] U.S. Patent Application Publication No. US 2003/0160886, which was published Aug. 23, 2003, discloses a digital camera having two photographing systems that are independent of each other. One embodiment shows one system including a monofocal "ordinary mode" lens and the other system including a zoom "telescopic mode" lens, each generating an image. An operator-actuated change over switch determines which image is to be recorded. Autofocus is also disclosed in connection with the separate photographing systems, where a "hill-climb" contrast comparison technique used in one system complements a "hill-climb" contrast comparison technique used in the other system. When it is desired to capture an image from the telescopic mode optical system, a rough autofocus search (where a stepping motor may be driven at intervals of several steps) is made by the ordinary mode optical system (where the focal depth is relatively large). This rough search results in a reduced focal distance range that includes the focusing position. Using the focal distance range information provided by the ordinary mode optical system, the telescopic mode optical system is driven to an autofocus search start position at one end of the reduced focal distance range. Then, a fine autofocus search is performed by the telescopic mode optical system (where the focal depth is relatively shorter), but only in the reduced focal distance range determined by the ordinary mode autofocus search. (When it is desired to capture an image from the ordinary mode optical system, the autofocus search is made solely by the ordinary mode optical system, with the telescopic mode optical system playing no part in the autofocus search.) In another embodiment in U.S. Patent Application Publication No. US 2003/0160886, which does not depend on the rough vs. fine search mentioned above, a "hill climb" contrast comparison search is performed while the focusing lens of a first optical system is driven stepwise so as to move from an infinite distance setting toward a closest distance position, and a second "hill climb" contrast comparison search is performed while the focusing lens of a second optical system is driven stepwise from the closest position toward the infinite setting. This procedure continues until a maximum contrast position is located, although neither system ordinarily needs to move through its entire range. This tends to reduce the time period for detecting a focusing position. In this embodiment, each of the optical systems could be used for capturing an image and for focus adjustment, or one optical system could be employed for capturing an image and focus adjustment and the other optical system could be devoted only to focus adjustment of the image-capturing optical system. In another embodiment, in the case where the non-capturing optical system determines the focusing position first, the capturing optical system is driven to that position and a fine adjustment is then made by the capturing optical system.

[0021] A problem with these prior art systems is that either a separate autofocus sensor must be used (thus increasing the cost) or else there is typically a significant "shutter delay" as the autofocus is performed using the same sensor that is used to capture the image. Moreover, the separate autofocus sensor is usually a rangefinder and, as mentioned above, the calibration between the dual lens rangefinder module and the adjustable focus lens position is not stable within the normal operating environment for digital cameras. Where the autofocus is

performed with the "through-the-lens" taking system, the process can be relatively slow in determining a focus setting due to the large number of autofocus images that must be captured and compared. The problem can be somewhat alleviated according to the aforementioned U.S. Patent Application Publication No. US 2003/0160886, but difficulties remain in rapidly achieving focus as the subject changes or moves, or in rapidly interchanging the focusing requirements of the optical systems when the operator elects to change the capture function from one photographing system to the other.

[0022] A special problem arises during video capture, where the autofocus images are derived from the same series of still images or frames that compose the video images. Consequently, the process of autofocusing may cause 5-20 or more out of focus video images to be produced in the video each time the scene changes. As a result, during video capture with pan movements of the camera where the scene changes continuously, large portions of the video are actually out of focus as the autofocus system hunts for proper focus. A further problem is that during video capture, many of the frames are out of focus due to the use of an autofocus system that uses the "hill climb method" to focus.

[0023] In copending, commonly-assigned U.S. patent application Ser. No. (docket 93231), entitled "Camera Using Multiple Lenses and Image Sensors to Provide Improved Focusing Capability" and filed on even date herewith in the names of John Border et al., the aforementioned problems are addressed in a multi-lens digital camera in which two (or more) image capture stages are used to separately capture images of the same scene so that one image capture stage can be used for autofocus while the other(s) is used for capturing a still image or a video. This provides precise, rapid autofocus in both still and video modes without unduly increasing the size or cost of the digital camera.

[0024] Besides the autofocus advantages, such a camera provides two separate image capture stages yielding separate high resolution images of basically the same scene, or the same portion(s) of the same scene. This offers a number of possibilities for using one of the images to modify or otherwise augment the other image. What is therefore needed is a digital camera with dual capture systems that provides an improved imaging capability by utilizing both images to provide an improved output image.

SUMMARY OF THE INVENTION

[0025] The object of this invention is to provide an improved imaging capability in a multi-lens digital camera utilizing both (or more) images to provide an improved output image. without unduly increasing the size or cost of the camera.

[0026] A further object of the invention is to utilize one of the images from a dual-lens camera as a secondary image that can be used to modify the other, primary image and thereby generate an enhanced primary image.

[0027] The present invention, which is directed to overcoming one or more of the problems set forth above, pertains to an electronic camera for producing an output image of a scene from a captured image signal. Briefly summarized, the invention comprises, according to a first embodiment of the invention:

[0028] a first imaging stage comprising a first image sensor for generating a first sensor output and a first lens for forming a first image of the scene on the first image sensor;

[0029] a second imaging stage comprising a second image sensor for generating a second sensor output and a second lens for forming a second image of the scene on the second image sensor; and

[0030] a processing stage for using the sensor output from the first imaging stage as a primary output image for forming the captured image signal and using the sensor output from the second imaging stage as a secondary output image for modifying the primary output image, thereby generating an enhanced, captured image signal.

[0031] The secondary output image may be used by the processing stage for a number of purposes, including without limitation: to sharpen portions of the primary image (e.g., to extend the depth of field of the primary still image or to selectively sharpen portions of the primary still image and defocus other portions of the image, particularly where the secondary output image is captured by the second imaging stage at a different focus position than used by the first imaging stage to capture the primary output image); to modify the dynamic range of the primary image (e.g., where the secondary output image is captured by the second imaging stage at a different exposure level than used by the first imaging stage to capture the primary output image); to provide scene analysis data for setting the capture parameters for the primary image; or to replace portions of the primary image (areas of lower noise but with some motion blur) with corresponding portions of the secondary image (areas of higher noise but little or no motion blur) to obtain a modified image with relatively low noise and good sharpness.

[0032] Briefly summarized, the invention generally comprises the use of two (or more) image capture stages, wherein an image capture stage is composed of a sensor, a lens and a lens focus adjuster, in a multi-lens digital camera in which the two (or more) image capture stages can be used to separately capture images of the same scene so that one image capture stage can be used for autofocus and other purposes while the other(s) is used for capturing an image. In thus utilizing the invention, a digital camera advantageously provides an improved imaging capability without unduly increasing the size or cost of the digital camera. More specifically, the non-capturing image stage may advantageously be used to provide a secondary image that can be used to modify or otherwise augment, e.g., the focus or dynamic range of the primary image.

[0033] These and other aspects, objects, features and advantages of the present invention will be more clearly understood and appreciated from a review of the following detailed description of the preferred embodiments and appended claims, and by reference to the accompanying drawings.

BRIEF DESCRIPTION OF THE DRAWINGS

[0034] FIG. **1** depicts a block diagram of a first embodiment of a digital camera using a first zoom lens with a first image sensor, and a second zoom lens with a second image sensor according to the invention.

[0035] FIGS. **2**A and **2**B are two perspective views of the digital camera shown in FIG. **1**.

[0036] FIG. **3** depicts a flow diagram showing a method for performing autofocus and for capturing digital still images according to a first embodiment of the digital camera shown in FIG. **1**.

[0037] FIG. **4** depicts a flow diagram showing a method for performing autofocus using a rangefinder method with two image capture stages.

[0038] FIG. **5** depicts a flow diagram showing a method for performing autofocus using a "hill climb method" with two image capture stages.

[0039] FIG. **6** depicts a flow diagram showing a method for producing an autofocus rangefinder calibration curve.

[0040] FIG. **7** depicts a flow diagram showing a method for producing an autofocus "hill climb method" calibration curve.

[0041] FIG. **8** depicts a flow diagram showing a method for performing autofocus and for capturing digital video images according to a second embodiment of the digital camera shown in FIG. **1**.

[0042] FIG. **9** depicts a flow diagram showing a method for performing autofocus with a rangefinder method with two image capture stages.

[0043] FIG. **10** depicts a flow diagram showing a method for performing autofocus with a "hill climb method" with two image capture stages.

[0044] FIG. **11** depicts a method for producing a range map with two image capture stages.

[0045] FIG. **12** depicts a block diagram of another embodiment of a digital camera using a first fixed focal length lens with a first image sensor, and a second (zoom) lens with a second image sensor.

[0046] FIG. **13** depicts a block diagram of another embodiment of a digital camera using a first fixed focal length lens with a first image sensor, a second (zoom) lens with a second image sensor, and a third (zoom) lens with a third image sensor.

[0047] FIG. **14** depicts a flow diagram showing a method for enhancing the depth of field of an image by using images from both image capture stages according to an embodiment of the invention.

[0048] FIG. **15**A and FIG. **15**B depict a diagram of a mobile phone camera with two image capture stages according to another embodiment of the digital camera.

[0049] FIG. **16**A and FIG. **16**B depict a diagram of a stage containing two image capture stages in a single stage for a mobile phone camera.

[0050] FIG. **17**A and FIG. **17**B are representations of images captured with two image capture stages showing the offset between the two images that is used to determine the distance to portions of the scene.

[0051] FIG. **18** depicts a flow diagram of a method for determining GPS locations of portions of the scene.

[0052] FIG. **19** depicts a flow diagram for selecting one of the imaging stages in a dual lens camera system as the primary capture unit, while relegating the other imaging stage to other functions, such as scene analysis, according to another embodiment of the invention.

[0053] FIG. **20** depicts a flow diagram illustrating the usage of the non-primary capture unit for scene analysis, according to another embodiment of the invention.

[0054] FIG. **21** depicts a flow diagram illustrating the usage of the non-primary capture unit for scene analysis whenever the change in scene conditions exceeds a threshold, according to another embodiment of the invention.

[0055] FIG. **22** depicts a flow diagram illustrating the usage of both the primary capture unit and the non-primary capture unit for scene analysis, according to another embodiment of the invention.

[0056] FIG. **23** depicts a flow diagram illustrating the reversal of the functions of the capture units, that is, the current scene analysis and primary capture units are reset to be the primary capture unit and scene analysis capture unit, respectively, according to another embodiment of the invention.

[0057] FIG. **24** depicts a flow diagram illustrating the usage of a preview image taken by the primary capture stage to set the capture unit parameters for the primary capture stage, specifically during the capture process, according to another embodiment of the invention.

[0058] FIG. **25** depicts a flow diagram illustrating the usage of a preview image taken by the primary capture stage and a scene analysis image taken by the non-capture stage to set the capture unit parameters for the primary capture stage, specifically during the capture process, according to another embodiment of the invention.

[0059] FIG. **26** depicts a flow diagram illustrating the usage of a primary image taken by the primary capture stage and an augmentation image taken by the non-capture stage to produce an enhanced image, according to another embodiment of the invention.

[0060] FIG. **27** depicts a diagram illustrative of the operation of a conventional dual lens rangefinder.

[0061] FIG. **28** depicts a flow diagram of a conventional "hill climbing" contrast autofocus algorithm.

[0062] FIG. **29** illustrates the relationship between the focus value obtained from the filters used to isolate components of the image and the lens position for a "hill climbing" autofocus method.

DETAILED DESCRIPTION OF THE INVENTION

[0063] Because digital cameras employing imaging devices and related circuitry for signal processing are well known, the present description will be directed in particular to elements forming part of, or cooperating more directly with, apparatus in accordance with the present invention. Elements not specifically shown or described herein may be selected from those known in the art. Certain aspects of the embodiments to be described may be provided in software. Given the system as shown and described according to the invention in the following materials, software not specifically shown, described or suggested herein that is useful for implementation of the invention is conventional and within the ordinary skill in such arts.

[0064] Each of the several embodiments described herein include an image capture assembly, such as a digital camera—still or video—or a digital scanner, having multiple image capture stages, each composed of a lens and an image sensor, wherein the lenses of the multiple image capture stages have different focal lengths to provide an extended optical zoom range for the image capture assembly. The present invention contemplates the use of the multiple image capture stages to provide an enhanced imaging capability, in addition to an enhanced autofocus capability. By using the image capture stages for image capture and autofocus, dedicated autofocus modules can be eliminated thereby reducing the cost and size of the image capture assembly while improving the sharpness of the captured still and video images, as well as increasing the speed of response of the autofocus system.

[0065] There are several embodiments by which one image capture stage may be used to capture digital still images or video images while another image capture stage is simultaneously being used for another purpose, such as enhanced

autofocus, generation of a secondary image, production of a range map, and the like. In a first embodiment described herein, when a user has set a zoom position to be within a first optical zoom range, a first imaging stage containing a first (e.g., zoom) lens is used to capture a still image or a series of images as in a video sequence, while a second imaging stage simultaneously provides images for the purpose of autofocus of the first imaging stage. Since the second imaging stage is not used to capture the images, the focus conditions of the lens in the second imaging stage can be adjusted over a wider range, e.g., around a peak contrast position (e.g., "hill climb" autofocus) or from the near focus position to the infinity focus position (e.g., "whole way" autofocus) to determine the new best focus setting for the lens in the first imaging stage without detrimentally affecting the focus quality of the images captured by the first imaging stage. When the new best focus condition has been determined using the second imaging stage, the focus condition of the first imaging stage is changed from the previous best focus condition to the new best focus condition.

[0066] When the user adjusts the zoom position on the image capture assembly to a second optical zoom range, the camera automatically switches to use the second imaging stage (containing, e.g., a second zoom lens) to capture the images, and begins using the first imaging stage for autofocus of the second imaging stage. Because the two lenses have different focal lengths, they have different magnifications. Therefore, the digital filters used to determine the autofocus may be adjusted, as a function of this difference in magnification, in order to compensate for the differences in magnification.

[0067] In a variation of this embodiment, two image capture stages are used together to form a high resolution rangefinder similar to a dual lens rangefinder but with higher resolution, which is provided by the two high resolution image capture stages and a larger separation distance between the two lenses in the two image capture stages. In this variation, the first image capture stage may be used to provide an initial accurate autofocus using a "hill climb" contrast comparison method; subsequently, the first image capture stage is used in conjunction with the second image capture stage as a high resolution rangefinder operating in a differential mode to detect any changes in the distance to the scene that require refocusing prior to capture of a digital still image or prior to or during a video capture. By using the rangefinder in a differential mode, that is, to discern a change in distance from an already focused position to a nearby changed focus position, the impact of environmental changes on the accuracy of the rangefinder is diminished.

[0068] In another embodiment described herein, the two image capture stages are both autofocused at the same time using a "hill climb" contrast comparison method prior to capture of a digital still image or capture of a video image by the first image capture stage. The second image capture stage then continues to check the focus by measuring the contrast in the image; when a change in contrast is detected, a second autofocus operation using the "hill climb" contrast comparison method is performed using the second image capture stage to determine the change in focus condition. The focus of the first image capture stage is then changed by an amount proportional to the change in focus determined by using the second image capture stage. Again, a differential focus change measurement is performed from a position established by a "hill climb" autofocus to improve the accuracy of the autofocusing process.

[0069] As mentioned in the background of the invention section, a special problem arises during video capture, where the autofocus images are derived from the same series of still images or frames that compose the video images. For instance, during video capture with pan movements of the camera where the scene changes continuously, large portions of the video are actually out of focus as the autofocus system hunts for proper focus. Moreover, many of the frames may be out of focus due to the use of an autofocus system that uses the "hill climb method" to focus, which as mentioned earlier may be unable to discern changing focus under certain conditions where the subject of interest has suddenly shifted in the scene.

[0070] Accordingly. in a variation of the foregoing embodiment, when the user has set the zoom position to be within the first optical zoom range, the first imaging stage, including the first zoom lens and its associated image sensor, is used to set the initial focus for taking an image, such as a video image, while the second imaging stage, including the second zoom lens and its associated image sensor, simultaneously provides a continuous "whole-way" autofocus input image to determine if the focus of the first zoom lens should be adjusted as a result of subject motion. Since the second zoom lens and its associated image sensor are not used to capture the motion images, the focus distance can be adjusted from the near focus to the infinity position, in order to determine the best focus setting without affecting the captured motion images. When the user adjusts the zoom position to be outside the first zoom range, the camera automatically switches to the second imaging stage, using the second zoom lens and its associated sensor to capture the motion sequence, and begins using the first imaging stage, with its first lens and associated image sensor, to simultaneously determine if the focus of the second zoom lens should be adjusted as a result of subject motion.

[0071] In another embodiment described herein, the two image capture stages are configured as a high resolution rangefinder in order to determine the distances to different portions of the scene in the form of a range map. The range map is then used to modify the captured image signal or the output image for a variety of purposes, such as (without limitation): to improve image processing and enable improved image quality; to improve object identification within the image; to enable object extraction from an image; to enable motion tracking of objects within multiple images; to enable reduced depth of field images by blurring of objects outside of the desired depth of field; to improve the dynamic range within images; to reduce exposure issues introduced by use of a flash; and to improve scene balance within the image.

[0072] In another embodiment described herein, and in accordance with the present invention, a first imaging stage, including a first zoom lens and a first image sensor, is used to capture a first (i.e., primary) still image at a first (i.e., primary) focus distance, while a second imaging stage, including a second zoom lens and a second image sensor, is used to simultaneously capture a second (i.e., secondary) still image at a second (i.e., secondary) focus distance. The sensor output from the second imaging stage is used as a secondary output image for modifying the primary output image, thereby generating an enhanced primary image signal. For instance, the secondary still image is used to provide an enhancement signal that may, e.g., sharpen portions of the primary still

image that are positioned near the secondary focus distance or may modify the dynamic range of the primary still image.

[0073] As mentioned above, the images from both imaging stages may be used to generate a range map identifying the distances to the different portions of the scene. In another embodiment described herein, the camera further includes a GPS unit for providing GPS coordinates for the location of the camera and an electronic compass for providing the pointing direction of the camera. Thereupon, the GPS coordinates for the location of the camera, the pointing direction of the camera, and distance offsets from the range map may be used in order to generate GPS coordinates for portions of the scene.

[0074] FIG. **1** depicts a block diagram of an image capture assembly **10**A according to the first embodiment of the present invention. Though not an essential aspect of the invention, the image capture assembly **10**A is preferably a portable battery operated device, small enough to be easily handheld by a user when capturing and reviewing images. In the preferred embodiment, the image capture assembly **10**A is a digital camera that produces both still images and motion video images that are stored on a removable memory card **54**. Alternatively, the digital camera may produce and store only motion images or only still images.

[0075] The image capture assembly **10**A includes two imaging stages **1** and **2**, both with zoom lenses **3** and **4**. (These stages will hereinafter be referred to in the specification as image capture stages, although in most cases only one stage—at a time—is capturing an image that is stored on the removable memory card **54**.) The first zoom lens **3** is controlled by a first lens focus adjuster, e.g., zoom and focus motors **5***a,* and provides an image to a first image sensor **12**. The second zoom lens **4** is controlled by a second lens focus adjuster, e.g., zoom and focus motors **5***b,* and provides an image to a second image sensor **14**. An adjustable aperture and shutter assembly in each zoom lens (not shown) is used to control the exposure to image sensors **12** and **14**.

[0076] FIGS. **2**A and **2**B show perspective views of the image capture assembly **10**A described in relation to FIG. **1**. FIG. **2**A is a frontal view of the image capture assembly **10**A, showing the first zoom lens **3**, the second zoom lens **4** and a flash **48**. FIG. **2**B is a rear view of the camera **10**A, showing a color LCD image display **70** and a number of user controls **42**, including a shutter button **42***a* for enabling an image capture sequence, a zoom button **42***c* for enabling a selection of a zoom setting, and a multi-position selector **42***d* for navigating through images, menu choices and the like that are displayed on the color LCD image display **70**.

[0077] The image capture stages **1** and **2** comprise the zoom lenses **3** and **4** and the image sensors **12** and **14**, as shown in FIG. **1**. While zoom lenses **3** and **4** are offset vertically, as shown in FIG. **2***a,* the zoom lenses **3** and **4** could be offset in other directions, such as horizontally. In addition, according to another embodiment of the invention, one (or both) of the zoom lenses **3** and **4** could be replaced with a fixed focal length lens. In all cases, the optical axes of the zoom lenses **3** and **4** and the sensors **12** and **14** are generally aligned with respect to each other so as to be viewing substantially the same scene, albeit typically with different fields of view. The configuration of the optical components are further described in the aforementioned, commonly assigned U.S. patent application Ser. No. 11/062,174, the disclosure of which is incorporated herein by reference, which includes several embodiments in which more than two image capture stages are used. The configuration of the zoom lenses **3** and **4** in the image capture stages **1** and **2** can include folded optical paths to change the overall dimensions of the image capture stages **1** and **2**; however, folded optical paths are not necessary for practice of the present invention.

[0078] In a preferred embodiment, the image sensors **12** and **14** are single-chip color megapixel CCD sensors, using the well-known Bayer color filter pattern in order to capture color images, although other sensors, such as CMOS sensors, and other color filter arrays, such as stripe filters, may be used equally well without limitation according to the invention. The image sensors **12** and **14** may have a variety of aspect ratios, for example, a 4:3 image aspect ratio and a variety of resolutions, for example, a total of 6.1 MP effective megapixels (million pixels), with, in this particular case, 2848 active columns of pixels×2144 active rows of pixels. It should also be understood that the image sensors **12** and **14** do not have to have the same specifications. For instance, in some embodiments disclosed in the aforementioned, commonly assigned U.S. patent application Ser. No. 11/062,174, the size, resolution, color filter array, spectral sensitivity and aspect ratio of the image sensors **12** and **14** can be different.

[0079] A control processor and timing generator **40** controls the first image sensor **12** by supplying signals to clock drivers **13**, and controls the second image sensor **14** by supplying signals to clock drivers **15**. The control processor and timing generator **40** also controls the zoom and focus motors **5***a* and **5***b,* an auto exposure detector **46**, user controls **42**, first and second digital multiplexer control elements **34** and **36**, and the flash **48** for emitting light to illuminate the scene. The user controls **42** are used to control the operation of the digital camera **10**A, as also described earlier in reference to FIG. **2**B.

[0080] An analog output signal **12***e* from the first image sensor **12** is amplified and converted to a first digital image signal by a first analog signal processor **22**. The digitized first digital image signal is provided to a first input of the first digital multiplexer control element **34** and to a first input of the second digital multiplexer control element **36**. An analog output signal **14***e* from the second image sensor **14** is amplified and converted to a second digital image signal by a second analog signal processor **24**. The digitized second digital image signal is provided to a second input of the digital multiplexer control element **34** and a second input of a second digital multiplexer control element **36**. The function of the first multiplexer **34** is to select either the first sensor output **12***e* from the first image sensor **12**, or the second sensor output **14***e* from the second image sensor **14** as the image capture signal. The function of the second multiplexer **36** is to select either the second sensor output **14***e* from the second image sensor **14** or the first sensor output **12***e* from the first image sensor **12** as the autofocus image signal, which is provided to an image processor **50**.

[0081] The control processor and timing generator **40** controls the digital multiplexers **34** and **36** in order to select one of the sensor outputs (**12***e* or **14***e*) as the captured image signal, and to select the other sensor output (**14***e* or **12***e*) as the autofocus image signal. The digital data provided by the first digital multiplexer control element **34** is temporarily stored in a DRAM buffer memory **38** and subsequently processed by the image processor **50** to produce a processed digital image file, which may contain a still digital image or a video image. The digital data provided by the second digital multiplexer control element **36** is provided to the image processor **50**, which performs autofocus calculations as will be described later in reference to FIGS. **4**, **5**, **6** and **7**.

[0082] Briefly summarized, the image processor **50** produces the focus detection signals that drive the first and second focus adjusters, that is, the zoom and focus motors **5***a* and **5***b*. The control processor and timing generator **40**, in combination with the image processor **50**, either (a) selects the sensor output **12***e* from the first imaging stage **1** as the captured image signal and uses the sensor output **14***e* from the second imaging stage **2** to generate the focus detection signal for the selected imaging stage **1** or (b) selects the sensor output **14***e* from the second imaging stage **2** as the captured image signal and uses the sensor output **12***e* from the first imaging stage **1** to generate the focus detection signal for the selected imaging stage **2**. In such a manner, the focus detection signal is applied to the zoom and focus motors **5***a* and **5***b* of the selected imaging stage in order to adjust the focus of the image providing the sensor output for the captured image signal.

[0083] The processing performed by the image processor **50** is controlled by firmware stored in a firmware memory **58**, which may be flash EPROM memory or any other form of appropriate memory. The processor **50** processes the digital input image from the DRAM buffer memory **38**, using a RAM memory **56** to store intermediate results during the processing stage. The processed digital image file is provided to a memory card interface **52**, which stores the digital image file on the removable memory card **54**. Removable memory cards **54** are one type of removable digital image storage medium, and are available in several different physical formats. For example, the removable memory card **54** can include (without limitation) memory cards adapted to well-known formats, such as the Compact Flash, SmartMedia, MemoryStick, MMC, SD, or XD memory card formats. Other types of removable digital image storage media, such as magnetic hard drives, magnetic tape, or optical disks, can alternatively be used to store the still and motion digital images. Alternatively, the digital camera **10**A can use internal non-volatile memory (not shown), such as internal Flash EPROM memory to store the processed digital image files. In such an embodiment, the memory card interface **52** and the removable memory card **54** are not needed.

[0084] The image processor **50** also receives input from a global positioning system (GPS) unit **57**, which enables the image processor **50** to determine the GPS coordinates (i.e., location) of the camera at any appropriate time, e.g., when an image is captured. The image processor also receives directional input from an electronic compass **59**, which enables the image processor **50** to determine which direction the camera is pointed, e.g., when an image is captured. The image processor **50** performs various other image processing functions, including color interpolation followed by color and tone correction, in order to produce rendered sRGB image data. The rendered sRGB image data is then JPEG compressed and stored as a JPEG image file on the removable memory card **54**. The rendered sRGB image data may also be provided to a host PC **66** via a host interface **62** communicating over a suitable interconnection **64**, such as a SCSI connection, a USB connection or a Firewire connection. The JPEG file preferably uses the so-called "Exif" image format defined in "Digital Still Camera Image File Format (Exif)" version 2.2 by the Japan Electronics and Information Technology Industries Association (JEITA), Tokyo, Japan. This format includes an Exif application segment that stores particular image metadata, including the date/time the image was captured, as well as the lens f/number, GPS location and pointing direction when the image was captured and other camera settings.

[0085] It should be noted that the image processor **50**, while typically a programmable image processor, can alternatively be, for example, a hard-wired custom integrated circuit (IC) processor, a general purpose microprocessor, or a combination of hard-wired custom IC and programmable processors. Furthermore, one or more of the functions shown as separate blocks in FIG. **1**, such as the digital multiplexer control elements **34** and **36**, the DRAM buffer memory **38**, and the RAM memory **58**, can be incorporated in an IC containing the image processor **50**. It should also be noted that the functions of at least certain portions of the control processor **40** and the image processor **50** may be merged as needed for purposes of certain applications and discussions, such as in the reference to a processing stage in this description and in certain of the claims, where, e.g., selection of a sensor output (as by the control processor **40**) and generation of a focus signal (as by the image processor **50**) are referred to. In other words, the recitation of a processing stage is intended to encompass the recited functions, whether they are to be found in one or more actual processing elements, circuits, or the like.

[0086] In a further embodiment of the present invention, the digital camera **10**A is included as part of a camera phone. In such an embodiment, the image processor **50** also interfaces to a cellular processor **90**, which uses a cellular modem **92** to transmit digital images to a cellular network (not shown) using radio frequency transmissions via an antenna **94**. In some embodiments of the present invention, the two image capture stages **1** and **2**, and the zoom and focus motors **5***a* and **5***b* may be part of an integrated assembly. In addition, the clock drivers **13** and **15**, as well as the analog signal processors **22** and **24** and the analog/digital converters included therewith, may be part of the integrated assembly.

[0087] FIG. **3** depicts a flow diagram showing a method for capturing digital images using the image capture assembly of FIG. **1**. In block **100**, when the camera **10**A is turned ON using a power switch (not shown), the zoom lenses **3** and **4** are set to their default positions, which is preferably a wide angle position where the output of the first image sensor **12** is used to capture images in a preview mode for display on the color LCD image display **70** to enable the user to compose the images to be captured. As part of composing the images, in block **102** the user typically presses the zoom button **42***c* in order to set a desired field of view for the digital camera **10**A.

[0088] In block **102**, the zoom position setting is compared to a value X at which the image capture function switches from the first image capture stage to the second image capture stage. In block **104**, if the zoom position setting is less than X (a negative response to block **102**), then the first image capture stage **1** is used to capture images in the preview mode, while the second image capture stage **2** is used to capture autofocus images. The first image capture stage **1** continues to capture images for preview on the display **70** (block **110**) while, in block **106**, the second image capture stage **2** is used to capture autofocus images for autofocus of the first image capture stage **1**, which are processed by the image processor **50** and used in block **108** to focus the first image capture stage **1**.

[0089] In block **112**, if the zoom button **42***c* is not pressed, and in block **114** if the capture button is pressed, a digital image is captured in block **116** with the first image capture stage **1**. Alternatively, if the zoom button is pressed in block

112, control is returned to block **102**, and if the capture button is not pressed in block **114**, control is returned to block **106**.

[0090] In block **124**, if the zoom position setting is greater than X (a positive response to block **102**), then the second image capture stage **2** is used to capture images in the preview mode, while the first image capture stage **1** is used to capture autofocus images. The second image capture stage **2** continues to capture images for preview on the display **70** (block **130**) while, in block **126**, the first image capture stage **1** is used to capture autofocus images for autofocus of the second image capture stage **2**, which are processed by the image processor **50** to generate a focus detection signal that is used in block **128** to focus the second image capture stage **2**.

[0091] In block **132**, if the zoom button **42***c* is not pressed, and in block **134** if the capture button is pressed, a digital image is captured in block **136** with the second image capture stage **2**. Alternatively, if the zoom button is pressed in block **132**, control is returned to block **102**, and if the capture button is not pressed in block **134**, control is returned to block **126**.

[0092] A flow chart of an autofocus process using the two image capture stages shown in FIG. **3** in a rangefinder configuration is shown in FIG. **4**, where the rangefinder method is used in blocks **108** and **128** of FIG. **3** to autofocus the images from the first and second image capture stages. In block **250**, the user determines the zoom position by adjusting the zoom control **42***c* on the camera, which in turn dictates, as described above, which image capture stage will be used to capture the final image and which image capture stage will be used only for autofocus images (block **252**). The image capture stage that will not be used for capture of the final image is zoomed to a position closest to the transition zoom position between the two zoom lens systems in the two image capture stages (block **254**). The focus lenses of the two image stages are moved to their respective hyperfocal positions, wherein the greatest focus range is produced (block **256**). In block **258**, the user presses the capture button **42** a from a position S**0** to a position S**1** to initiate the autofocus sequence (and the autoexposure sequence). (The capture button has **3** positions: S**0** is the neutral position that the button maintains prior to the operator touching the capture button; S**1** is the intermediate position in which the camera performs autofocus and autoexposure; S**2** is the final position in which the camera performs a final autoexposure and captures the final image.)

[0093] Autofocus images are then captured by both image stages (block **260**) with their zoom lenses at their respective zoom positions. The autofocus image from the image stage in the lower zoom position, i.e., where the zoom position is less than X (see block **102** in FIG. **3**), is then cropped and upsampled so that corresponding features in the two autofocus images span the same number of pixels (block **262**). The cropped and upsampled autofocus image is then correlated with the other autofocus image to identify the pixel shift between the two autofocus images (block **264**) and thereby produce the focus detection signal. FIG. **17**A shows a representation of the autofocus image **350** as captured from the higher zoom position image stage. FIG. **17**B shows a representation of a cropped and upsampled autofocus image **352** from the image stage in the lower zoom position. These representations show the offset between the two images that is used to determine the distance to portions of the scene. In block **266**, a calibration factor is then applied to the focus detection signal to determine the distance that the focus lens must be moved to produce a best focus condition for the image capture. In block **268**, the focus detection signal is applied to the zoom and focus motor **5***a* and the focus lens is then moved the determined distance in the image capture stage that will be used for the final image capture to produce the condition for best focus **268**. When the user pushes the capture button from S**1** to S**2**, the image capture stage capture the final image.

[0094] A flow chart of an autofocus process using the two image capture stages shown in FIG. **3** in a well known "hill climb" contrast comparison method is shown in FIG. **5**, where the "hill climb" contrast comparison method is used in blocks **108** and **128** of FIG. **3** to autofocus the images from the first and second image capture stages. In block **250**, the user selects a zoom position. The zoom position determines which imaging stage will be used as the capture stage (block **252**). Then, in block **254**, the image capture stage not used for capture is zoomed to the point closest to the user selected zoom position from block **250**. In block **258**, the user pushes the capture button **42***a* from the S**0** position to the S**1** position to initiate an autofocus sequence. Then, in block **272**, both image capture stages are autofocused by the "hill climb" method. When the user pushes the capture button from the S**1** position to the S**2** position (block **274**), video images are continuously captured by the capture stage (block **276**).

[0095] In order to maintain focus with a minimal amount of hunting, focus is continually checked in block **278** with the image capture stage not being used for capture using the "hill climb" contrast comparison method. Then, in the decision block **280**, if the focus is good, control is returned to block **276** and video images are continuously captured by the capture stage. If, in the decision block **280**, if the focus is not good, then the focus lens adjustment is identified (block **282**) that is needed to produce best focus on the image capture stage not being used for capture. In block **284**, the autofocus "hill climb" method calibration curve and the identified focus lens adjustment is used to determine the movement of the focus lens needed in the capture stage to produce best focus, thereby producing a focus change detection signal. Finally, in block **286**, the focus change detection signal is applied to the zoom and focus motor **5***a* or **5***b* and the focus lens in the capture stage is moved to the new best focus position, and control is returned to block **276** and video images are continuously captured by the capture stage.

[0096] Alternatively, and also in order to maintain focus with a minimal amount of hunting, focus is continually checked in block **278** with the image capture stage not being used for capture using the "whole way" autofocus method. Accordingly, in block **284**, an autofocus "whole way" method calibration curve and the identified focus lens adjustment is used to determine the movement of the focus lens needed in the capture stage to produce best focus, thereby producing a focus change detection signal. Finally, in block **286**, the focus change detection signal is applied to the zoom and focus motor **5***a* or **5***b* and the focus lens in the capture stage is moved to the new best focus position, and control is returned to block **276** and video images are continuously captured by the capture stage.

[0097] Calibration curves are used in both FIGS. **4** and **5** to determine the movement of the focus lens needed in the capture stage to produce best focus. FIGS. **6** and **7** depict flow diagrams for calculating these curves. More specifically, FIG. **6** depicts calculation of the autofocus rangefinder calibration curve used in block **266** of FIG. **4**. In block **300** of FIG. **6**, a series of image sets are captured with objects at known distances, using the shorter focal length first image capture stage

and the longer focal length second image capture stage at a series of focus lens positions. Then, in block **302**, the autofocus image from the lower focal length first image stage is cropped and upsampled so that corresponding features in the two autofocus images span the same number of pixels as shown in FIGS. **17**A and **17**B. In block **304**, the images from the second image capture stage are correlated to corresponding portions of the images from the cropped and upsampled image from the first image capture stage to determine the pixel offset between the images in each image set. Thereupon, in block **306**, the data of pixel offset between images in each image set versus known distance to objects is stored as the autofocus rangefinder calibration curve for use in block **266** of FIG. **4**.

[0098] FIG. **7** depicts calculation of the "hill climb" calibration curve used in block **284** of FIG. **5**. In block **400** of FIG. **7**, a series of image sets are captured with objects at known distances, using the first image capture stage and the second image capture stage—wherein autofocus is done by the "hill climb" method for each image. Then, in block **402**, the focus lens positions is compared for the two image capture stages versus the distance to the focused objects in the image sets. Then, the data of focus lens positions of the first image capture stage versus the focus lens positions of the second image capture stage for the same distance to focused objects in the images is stored as an autofocus "hill climb" method calibration curve for use in block **284** of FIG. **5**.

[0099] FIG. **8** depicts a flow diagram showing a method for capturing video images using the image capture assembly of FIG. **1**. Much of the flow diagram duplicates the functional elements shown in FIG. **3**, and will not be repeated here where the same functions and reference characters are indicated. If the zoom position setting is less than X (a negative response to block **102**), then the first image capture stage **1** is used to capture video images, while the second image capture stage **2** is used to capture autofocus images. The focus of the first image capture stage is performed as described in FIG. **3**, except it is now for a video image. Subsequently, in block **112** in FIG. **8**, if the zoom button **42***c* is not pressed, and in block **114** if the capture button is pressed, a video image is captured in block **118** by the first image capture stage **1**. The video image is checked for focus quality in block **119**, and if there is a need to refocus, control is returned to block **106** and the focus change detection signal is generated, which is used in block **108** to drive the focus motor **5***a* for the first image capture stage **1**. If there is no need to refocus, then control is returned to block **112**.

[0100] If the zoom position setting is greater than X (a positive response to block **102**), then the second image capture stage **2** is used to capture video images, while the first image capture stage **1** is used to capture autofocus images. The focus of the second image capture stage is performed as described in FIG. **3**, except it is now for a video image. Subsequently, in block **132**, if the zoom button **42***c* is not pressed, and if in block **134** if the capture button is pressed, a video image is captured in block **138** with the second image capture stage **2**. The video image is checked for focus quality in block **139**, and if there is a need to refocus, control is returned to block **126** and the focus change detection signal is generated, which is used in block **128** to drive the focus motor **5***b* for the second image capture stage **2**. If there is no need to refocus, then control is returned to block **132**.

[0101] A flow chart of an autofocus process using the two image capture stages shown in FIG. **8** in a rangefinder configuration is shown in FIG. **9**, where the rangefinder method is used in blocks **108** and **128** of FIG. **8** to autofocus the images from the first and second image capture stages. In block **440** of FIG. **9**, a first autofocus image is captured with the lower focal length image capture stage. Then, in block **442**, the autofocus image from the image stage in the lower focal length is cropped and upsampled so that corresponding features in the two autofocus images span the same number of pixels. Meanwhile, in block **448**, a second autofocus image is captured with the longer focal length image capture stage. The second autofocus image is correlated in block **444** with the cropped and upsampled image to determine the pixel offset between the images for different portions of the images. Then, in block **446**, the focus correction needed is determined from the offset and the autofocus rangefinder calibration curve (which was calculated in FIG. **6**).

[0102] A flow chart of an autofocus process using the two image capture stages shown in FIG. **8** in a "hill climb" contrast comparison method is shown in FIG. **10**, where the "hill climb" contrast comparison method is used in blocks **108** and **128** of FIG. **8** to autofocus the images from the first and second image capture stages. In block **460** of FIG. **10**, a first image is captured with the first image capture stage, wherein the autofocus is done by the "hill climb" method. Then, in block **462**, the image from the first image capture stage is provided as a preview image on the display. Meanwhile, in block **466**, a second image is captured with the second image capture stage, wherein the autofocus is done by the "hill climb" method. Then, in block **468**, another, subsequent image is captured with the second image capture stage, wherein the autofocus is also done by the "hill climb" method. In block **470**, the focus conditions for the second image are compared to those of the subsequent image. Then, if the focus conditions have changed (positive response to block **472**), the focus conditions are changed for the first image capture stage based on the change of the focus conditions for the second image capture stage and the autofocus "hill climb" method calibration curve (which was calculated in FIG. **7**). If the focus conditions have not changed (negative response to block **472**), control is returned to block **468** and another image is captured with the second image capture stage.

[0103] Alternatively, and in order to maintain focus with a minimal amount of hunting, focus is continually checked in block **470** with the second image capture stage using the "whole way" autofocus method. Accordingly, if the focus conditions have changed (positive response to block **472**), the focus conditions are changed for the first image capture stage based on the change of the focus conditions for the second image capture stage and an autofocus "whole way" method calibration curve. If the focus conditions have not changed (negative response to block **472**), control is returned to block **468** and another image is captured with the second image capture stage.

[0104] FIG. **11** depicts a flow diagram showing a method for processing images captured using the image capture assemblies of FIGS. **3** or **8**, wherein a range map is produced. (Certain parts of the diagram bear the same functions and reference characters as used in FIG. **9**.) Methods to produce a rangemap are well known to those skilled in the art; for example, a description of a method for producing a rangemap or depth map from a disparity map produced from the pixel offset information for a set of images captured by multiple cameras with similar fields of view is described in United

States Patent Application Publication Number 2006/0193509 (published Aug. 31, 2006 in the names of Antonio Criminisi et al., and entitled "Stereo-based Image Processing"), which is incorporated herein by reference. In the case described in the present patent application, two or more image capture devices are included in a single electronic camera. Since the two or more image capture devices have different focal lengths, at least one of the images must be modified to make the two or more images comparable to enable the pixel offsets to be determined. Referring now to FIG. **11**, in block **440** a first autofocus image is captured with the lower focal length image capture stage and, in block **442**, the autofocus image from the image capture stage in the lower zoom position is cropped and upsampled so that corresponding features in the two autofocus images span the same numbers of pixels. Meanwhile, in block **448**, a second autofocus image is captured with the higher focal length image capture stage. Then, in block **480**, the second autofocus image is correlated with the cropped and upsampled image to determine the pixel offset between the images for different portions of the images. The pixel offsets are then converted in block **482** to distances from the image capture device using the autofocus rangefinder calibration curve. A map is then produced in block **484** showing the distances to different portions of the images.

[0105] The distance from the image capture device to portions of the scene can be calculated from the measured pixel offsets between corresponding portions of the first and second autofocus images, that is, between corresponding portions of the cropped and upsampled image obtained in block **442** from the first autofocus image and the second autofocus image obtained from block **448**. The relationship between the pixel offset as experienced on the image sensors p, the pixel size m, the spacing between lenses s, the effective focal length of the lensfand the distance d to the portion of the scene is given as

$$d=s\cdot f/(p\cdot m)$$

Table 1 shows typical pixel offsets for an image capture device as described. In a preferred embodiment, the relationship between pixel offset and distance to portions of the scene is calibrated against objects in a scene with known distances to compensate for any unexpected variations in dimensions and any angular tilt between the two lens assemblies.

TABLE 1

Pixel size (mm)		0.002
Separation between lenses (mm)		20
Focal Length (mm)		6
Distance (ft)	Distance (mm)	Offset (pixels)
0.5	152.4	393.7
1	304.8	196.9
2	609.6	98.4
4	1219.2	49.2
8	2438.4	24.6
16	4876.8	12.3
32	9753.6	6.2
64	19507.2	3.1
128	39014.4	1.5

[0106] As mentioned earlier, The range map is then used to modify the captured image signal or the output image for a variety of purposes, such as (without limitation):

[0107] a) to improve object identification within the image by identifying the continuous boundaries of the object so the shape of the object can be defined;

[0108] b) to enable object extraction from an image by identifying the continuous boundaries of the object so it can be segmented within the image;

[0109] c) to enable motion tracking of objects within multiple images by identifying objects so they can be tracked as the same object between images;

[0110] d) to enable dynamic depth of field images by blurring of portions of the image that correspond to areas of the scene that lie outside of the desired depth of field;

[0111] e) to improve the dynamic range within images by applying gain adjustments to objects as a whole;

[0112] f) to reduce exposure issues introduced by use of a flash by reducing the gain on the portions of the image that correspond to objects in the foreground and increasing the gain on objects in the background;

[0113] g) to improve scene balance within the image by enabling objects in the foreground to be emphasized.

[0114] In order to understand the use of a range map for purposes such as noted above, it is helpful to consider an example. Assume that a user/photographer has a great picture of the Alaskan mountains—beautiful clouded sky and white-capped mountains in the most distant ranges, flowers carpeting the fields in the mid range, and a black dog sitting in the foreground about 5 feet away. However, the clouds are blown out (over-exposed), as are the white-capped mountains. The black dog is too dark (underexposed) and out of focus (because, e.g., the camera was set on landscape mode). Using the range data, several features of the image can be modified. The exposure for various locations can be improved by applying gain adjustments to selected object portions of the image: in particular, e.g., to the cloud detail, the snow detail, and the fur on the black dog. More generally, the range map can be used to improve dynamic range within the output image by applying gain adjustments to objects as a whole within the output image, and independently of their position in the range map. Moreover, the depth of field can be adjusted so that, e.g., the dog is in focus, the mountains are in focus and so are those great flowers. Or, if the user really wants to emphasize the dog more than the beautiful scenery, the range data can be used to isolate the mountains and the flowers, which can then be blurred, and further to isolate the dog, which is sharpened to obtain a nice sharp image. As can be understood, given the availability of a range map according to the invention, there are numerous other uses that would be available for artistically optimizing the image. For instance, the user can make a dynamic depth of field, that is, with mixed regions of the ranges in focus. More generally, the range map can be used to enable dynamic depth of field images by blurring portions of the output image, independently of their position in the range map, that correspond to areas of the scene that lie outside of a desired depth of field for a featured portion of the image. For example, the dog and mountains, albeit they are at opposite range extremes, could be brought in focus because they are the regions of interest and the flowers in the mid range can be blurred smoothly.

[0115] FIGS. **12** and **13** show block diagrams of digital cameras using different variations of the optical image capture stages. Most components subsequent to the image capture stages are the same as those described in connection with FIG. **1**, and will not be further described here. FIG. **12** depicts a block diagram of a digital camera having a first image

capture stage **71** and a second image capture stage **2**. The first stage **71** includes a first fixed focal length lens **73** and the first image sensor **12**, and the second stage **2** includes the second (zoom) lens **4** and second image sensor **14**. The focusing is carried out between the focus adjustments of the first and second image capture stages **71** and **2**.

[0116] Because the focal length of the fixed focal length lens typically generates an ultra-wide angle field of view, e.g., 22 mm equiv., it may have a fixed focus set to a distance near the lens hyperfocal distance of, e.g., 8 feet, so that objects from 4 feet to infinity are in focus. Therefore, the fixed focal length lens does not need to include a focus adjustment. The fixed focal length lens includes an adjustable aperture and shutter assembly (not shown) to control the exposure of the image sensor.

[0117] FIG. **13** depicts a block diagram of a digital camera having a first image capture stage **71**, a second image capture stage **2**, and a third image capture stage **74**. The first stage **71** includes a first fixed focal length lens **73** with a first image sensor **12**, the second stage **2** includes a second (zoom) lens **4** with a second image sensor **14**, and the third image capture stage **74** includes a third (zoom) lens **75** with a third image sensor **16**. According to this configuration, the first lens **73** is typically a ultra-wide angle lens, the second (zoom) lens **4** is typically a wide angle zoom lens, and the third (zoom) lens **75** is typically a telephoto zoom lens. Since, as mentioned in the preceding paragraph, the first fixed focal length lens **73**, being an ultra-wide angle lens, is typically not focused, the focusing is carried out between the second and third image capture stages **2** and **74**.

[0118] FIG. **14** depicts a flow diagram showing a method for enhancing the depth of field of an image by using images from both image capture stages from FIG. **1**, in accordance with the present invention. In block **500** of FIG. **14**, the zoom position is set to a default position when the camera is powered on. In block **502**, the zoom position setting is compared to a value X at which the image capture function switches from the first image capture stage to the second image capture stage. In block **504**, if the zoom position setting is less than X (a negative response to block **502**), then the first image capture stage **1** is used to capture images in the preview mode, while the second image capture stage **2** is used to capture autofocus images. The first image capture stage **1** continues to capture images for preview on the display **70** (block **506**) while the second image capture stage **2** is used to capture autofocus images for autofocus of the first image capture stage **1**, which are processed by the image processor **50** and used to focus the first image capture stage **1**. Should the zoom button not be pressed (negative response to block **508**), and when the shutter button **42***a* is pressed, a primary still image is captured in block **510** using the first image capture stage set to a primary focus position. Then, in block **512**, a secondary still image is captured using the second image capture stage set to a secondary focus position. Then, in block **514**, the secondary still image is used to enhance the depth of field of the primary image, for instance, where the secondary still image is used to provide an enhancement signal that can be used to sharpen portions of the primary still image that are positioned near the secondary focus distance.

[0119] In block **524**, if the zoom position setting is greater than X (a positive response to block **502**), then the second image capture stage **2** is used to capture images in the preview mode, while the first image capture stage **1** is used to capture autofocus images. The second image capture stage **2** continues to capture images for preview on the display **70** (block **526**) while the first image capture stage **1** is used to capture autofocus images for autofocus of the second image capture stage **2**, which are processed by the image processor **50** and used to focus the second image capture stage **2**. Should the zoom button be pressed (positive response to block **528**), and when the shutter button **42***a* is pressed, a primary still image is captured in block **530** using the second image capture stage set to a primary focus position. Then, in block **532**, a secondary still image is captured using the first image capture stage set to a secondary focus position. Then, in block **534**, the secondary still image is used to enhance the depth of field of the primary image, for instance, where the secondary still image is used to sharpen portions of the primary still image that are positioned near the secondary focus distance.

[0120] As shown above, the enhancement signal is generated by the camera to sharpen portions of the primary still image that are positioned near the secondary focus distance. However, the primary and secondary still images may submitted to an external processor, such as the host PC **66** illustrated in FIG. **1**, and the enhancement signal is generated by the external processor to sharpen portions of the primary still image that are positioned near the secondary focus distance.

[0121] The concept of multiple lenses and multiple sensors, and the use of an integrated image capture assembly, may be adapted for use in a cell phone of the type having a picture taking capability. Accordingly, and as shown in FIG. **15**A, a cell phone **600** includes a phone stage comprising a microphone **602** for capturing the voice of a caller, related electronics (not shown) for processing the voice signals of the caller and the person called, and a speaker **604** for reproducing the voice of the one called. A keypad **606** is provided for entering phone numbers and image capture commands, and a (LCD) display **608** for showing phone-related data and for reproducing images captured by the phone or received over the cellular network. The rear view of the cell phone **600** shown in FIG. **15**B identifies some of the internal components, including a cellular image capture assembly **610** connected via the image processor **50** (as shown in FIG. **1**) to a cellular processing stage comprising the cellular processor **90** and the modem **92**. The cellular processor **90** receives and processes the image data from the image processor **50** and the voice data captured by the microphone **602**, and transfers the image and voice data to the cellular modem **92**. The cellular modem **92** converts the digital image and voice data into the appropriate format for transmission by the antenna **94** to a cellular network.

[0122] As the cellular image capture assembly **610** is shown in FIGS. **16**A and **16**B, where FIG. **16**A is a top view of the assembly **610** taken along the lines **24**B-**24**B in FIG. **16**B, the assembly **610** comprises an integrated packaging of the optical and imaging components on a common substrate **620**. More specifically, the assembly **610** includes a first fixed focal length lens **612** and a first image sensor **614**, and a second fixed focal length lens **616** and a second image sensor **618**. The first lens **612**, preferably a fixed focal length wide angle lens (such as a 40 mm equiv. lens), forms an image on the first image sensor **614**, and the second lens **616**, preferably a fixed focal length telephoto lens (such as 100 mm equiv. lens), forms an image on the second image sensor **618**. Both of the lenses are oriented in the same direction in order to form images of the same portion of the overall scene in front of them, albeit with different fields of view.

[0123] Each lens **612** and **616** and each associated image sensor **614** and **618** are mounted to the substrate **620** with an IR cut filter **622** in between to reduce the incidence of IR radiation on the image pixels. Electronic components **624**, such as resistors, capacitors and power management components, are also mounted on the substrate **620**. The image signals are taken from the substrate **620** via a flex connector **626**. The data taken from the assembly **610** may be raw image data, or if suitable processors (not shown) are on board the substrate **620**, the data could be YUV image data or JPEG image data. Moreover, the image processor **50** may provide digital zooming between the wide angle and the telephoto focal lengths; the user may initiate such zooming via a user interface displayed on the (LCD) display **608** and by keying appropriate buttons on the keypad **606**. Furthermore, the wide angle image sensor **614** may have high resolution, e.g., higher than that of the telephoto image sensor **618**, in order to provide a higher quality source image for the digital zooming.

[0124] In an embodiment according to the present invention, where both lenses **612** and **616** are adjustable focus lenses, the image processor **50** either (a) selects the sensor output from the wide angle lens **612** as the captured image signal and uses the sensor output from the telephoto lens **616** to generate a focus detection signal for the wide angle lens **612** or (b) selects the sensor output from the telephoto lens **616** as the captured image signal and uses the sensor output from the wide angle lens **612** to generate the focus detection signal for the telephoto lens **616**. The focus detection signal is then applied to the autofocus subsystem **628** of the telephoto lens **616** in order to adjust the focus of the image providing the sensor output for the captured image signal. In this embodiment, the wide angle lens **612** could instead be a zoom lens, such as a wide angle to normal angle zoom lens.

[0125] In another embodiment, the wide angle lens **612** is set to its hyperfocal distance, which means it is in focus from a few feet to infinity without need for any focus adjustment by the user. The telephoto lens **616** is automatically focused by an auto focus subsystem **628**. This is required because the hyperfocal distance increases as the focal length increases, and so the focus needs to be adjusted in order to obtain proper focus for objects at typical (e.g. 4' to 12') distances. By using only one focusing subsystem **628** for the telephoto lens **616**, the cost and size can be reduced.

[0126] An important constraint in this embodiment is the "z" dimension **630**, which must be held to a very small figure consistent with a cell phone layout and architecture. This may be obtained by careful choice of the telephoto focal length and the size of the sensor. For example, the size of the sensor **616**, and consequently the size of the image that must be produced to fill the sensor, may be made small enough to reduce the focal length to an acceptable z dimension **630**.

[0127] In a further embodiment, the two lenses may have approximately identical focal lengths, with the imaging arrays being of different sizes. With the differently sized imaging arrays, each lens is designed to fill the area of the imaging array and each lens-array combination will have substantially the same actual focal length, i.e., the same lens to array distance. However, the 35 mm equiv. of each lens will be different; consequently, each lens will have a different field of view.

[0128] While not shown in detail in FIGS. **16**A and **16**B, but similarly as was explained in connection with FIG. **1**, an analog output signal from the first image sensor **614** is amplified by a first analog signal processor and provided to a first input of a control element, e.g., an analog multiplexer control element provided as one of the electronic components **624** on the substrate **620**. The analog output signal from the second image sensor **618** is amplified by a second analog signal processor and provided to a second input of the control element. The function of the control element is to select either the first sensor output from the first image sensor **614** or the second sensor output from the second image sensor **618**, depending on user input from the keypad **606** as to zoom selection, thereby providing a selected sensor output from the cellular image capture assembly **600** to the image processor **50**.

[0129] In a further embodiment using the range map (generated according to FIG. **11**), the GPS location and the pointing direction of the camera, which is provided by the GPS unit **57** and the electronic compass **59** in the camera, are combined with distances and directions from the camera to portions of the scene to determine the GPS locations for portions of the scene. FIG. **18** depicts a flow chart for a method to determine GPS locations for portions of the scene. In block **750**, the GPS location of the camera is determined by the GPS unit **57** in the camera. The pointing direction of the camera is determined in block **752** by the electronic compass **59** in the camera. Distance offsets from the camera to portions of the scene are provided by the range map, which is obtained in block **754** from a procedure such as depicted in FIG. **11**. Angular offsets from the pointing direction of the camera (provided by the electronic compass **59**) are determined in block **756** from the location of a portion of the scene in the field of view in the image. GPS locations for portions of the scene are determined in block **758** by adding the distance offsets and the angular offsets to the GPS location and pointing direction of the camera. The GPS locations for portions of the scene are then stored in block **760** in the metadata for the image or displayed as labels on the image in the form of a GPS location map. Alternately, the GPS location for a portion of the image can be displayed on the electronic camera.

[0130] Those skilled in the art will recognize that GPS locations of portions of the scene can be used for a variety of purposes, including without limitation: determining the identity of an object; providing navigational directions to a location in a scene; identifying the field of view of a camera relative to a map or other geographical database, etc.

[0131] FIG. **19** depicts a flow diagram illustrating a process for selecting one of the imaging stages in a dual lens camera system as the primary capture unit, while relegating the other imaging stage to certain other functions, such as scene analysis, according to the present invention. More specifically, the power to the camera is turned on and the initialization process begins (block **1100**). After the initialization process is completed, the first and second imaging stages **1** and **2** are set to their default zoom positions (block **1102**), which are predetermined initial zoom positions that determine the images that are initially captured and displayed. Thereupon, the first and second imaging stages capture and display first and second preview images (block **1104**) on the image display **70**. These images could be displayed in several ways, for instance, side by side on the display as thumbnails or the like, one within the other, sequentially, etc. Next, the camera operator is asked to decide whether the first or second preview image should be the primary image (block **1106**), where the primary image will be the one that is captured and stored. The operator is given a display time interval x in which to make this decision (block **1110**). If the shutter button is pressed during this

interval (block **1108**), or if the operator fails to make a decision during this interval (yes to block **1110**), a predetermined one of the imaging stages (the default imaging stage) is automatically set to be the primary capture unit (block **1112**). (The default imaging stage could be pre-selected for a variety of reasons, one being to provide a comprehensive, wider angle view of the scene as the initial image.) Otherwise, if the operator picks one of the stages (yes to block **1106**), the selected imaging stage is set to be the primary capture unit (block **1124**). For either situation, the other (non-selected) imaging stage is designated as the scene analysis capture unit (block **1114**). Thereupon, the primary capture unit is operated in the preview mode, as subsequently explained in connection with FIGS. **20-22**.

[0132] FIGS. **20-22** and **24-26** depict flow diagrams illustrating the usage or analysis of the image from one imaging stage in a dual (or more) lens camera system to modify the image produced by another imaging stage according to the present invention, that is, to influence, analyze, augment or otherwise change the image produced by the other imaging stage. For instance, in FIG. **20**, once the primary capture unit is put in the preview mode (as shown in FIG. **19**), the scene analysis capture unit analyzes the scene (block **1200**) and the image processor **50** sets the primary capture unit parameters utilizing the scene analysis data obtained by the scene analysis capture unit (block **1202**). Such scene analysis data could include without limitation exposure data, dynamic range data, depth of field data, color balance, identification of different aspects of the scene including faces, grass, sunset, snow, etc, and the capture unit parameters could include without limitation aperture value, exposure time, focus position, white balance, ISO setting, etc. The preview image is then captured by the primary capture unit and displayed on the display **70** (block **1204**). The scene analysis capture unit then continues to analyze the scene (block **1206**), and if the scene conditions have not changed (no to block **1208**) the process loops back to block **1204** and a preview image is again captured by the primary capture unit and displayed on the display **70** (without changing the capture parameters). If the scene conditions have changed (yes to block **1208**), the process loops back to block **1202** and the image processor **50** resets the primary capture unit parameters utilizing the scene analysis data obtained by the scene analysis capture unit, and the subsequent process is repeated as before.

[0133] In FIG. **21**, the primary capture unit parameters are only changed if the change in scene conditions exceed a threshold value x. Thus, in utilizing the preview mode with a threshold, the scene analysis capture unit captures an image and analyzes the scene (block **1300**). Then, the image processor **50** sets the primary capture unit parameters utilizing the scene analysis data obtained by the scene analysis capture unit (block **1302**). A preview image is then captured by the primary capture unit and displayed on the display **70** (block **1304**). Then, another image is captured from the scene analysis capture unit (block **1306**). If the scene conditions of this later image fail to change by a threshold equal to x (no to block **1308**), that is, the scene conditions are considered to be stable from image to image, the process loops back to block **1304** and another preview image is captured by the primary capture unit and displayed on the display **70** (without changing the capture parameters). Then, another image is captured from the scene analysis capture unit (block **1306**). Otherwise, when the scene condition change is greater than the threshold x and the situation is considered to be unstable (yes to block **1308**), the process loops back to block **1302** and the image processor **50** resets the primary capture unit parameters utilizing the scene analysis data obtained by the scene analysis capture unit. Then, the process is repeated as before.

[0134] In FIG. **22**, the consideration of the threshold scene conditions is enhanced by considering the relative zoom positions of the capture units and utilizing scene information from the images captured by both of the capture units. In utilizing this enhanced preview mode, the zoom position of the scene analysis capture unit is set relative to the zoom position of the primary capture unit (block **1400**). Then, the scene analysis capture unit captures an image (block **1402**) and the image processor **50** sets the primary capture unit parameters utilizing the scene analysis data obtained by the scene analysis capture unit (block **1404**). A preview image is then captured by the primary capture unit (block **1406**) and the scene is analyzed utilizing the captured preview image and the scene analysis data (block **1408**). Then, the image processor **50** sets the primary capture unit parameters utilizing the results of the preceding scene analysis (block **1410**), that is, results obtained by analyzing images from both capture units. Next, the preview image is captured by the primary capture unit and displayed on the display **70** (block **1412**) and another image is captured from the scene analysis capture unit (block **1414**). The scene is then analyzed by utilizing the captured preview image data and the scene analysis data (block **1416**). If the scene conditions fail to change by a threshold equal to x (no to block **1418**), that is, the scene conditions are considered to be stable, the process loops back to block **1412** and another preview image and scene analysis image are captured by the primary capture unit and the scene analysis capture unit, respectively (blocks **1412** and **1414**) and the aforementioned process continues. Otherwise, where the scene condition change is greater than the threshold (yes to block **1400**) and the situation is considered to be unstable, the process loops back to block **1410** and the image processor **50** resets the primary capture unit parameters utilizing the results of new scene analysis data (obtained by the scene analysis capture unit in block **1416**), and the process is repeated.

[0135] During the operations shown in the preceding FIGS. **19-22**, the preview process is continued as shown unless either the shutter button **42*a*** or the zoom button **42*c*** is pressed. As shown in FIG. **23**, if the zoom button **42*c*** is pressed (block **1500**), and if the requested zoom position is not within the zoom range of the primary capture unit (yes to block **1502**), the functions of the capture units are reversed, that is, the current scene analysis and primary capture units are reset to be the primary capture unit and scene analysis capture unit, respectively. Then, the zoom position of the primary capture unit is set to the selected zoom position (block **1506**) and the process returns to the preview mode, as illustrated by FIGS. **20-23**. However, if the zoom button **42*c*** is pressed (yes to block **1500**), and if the requested zoom position is within the zoom range of the primary capture unit (no to block **1502**), the functions of the respective capture units are maintained the same as before and the zoom position of the primary capture unit is set to the selected zoom position (block **1506**), and the process returns to the preview mode.

[0136] FIGS. **24-26** depict flow diagrams illustrating the usage or analysis of the image from one imaging stage in a dual (or more) lens camera system to modify the image produced by another imaging stage according to the present invention, that is, to influence, analyze, augment or otherwise change the image produced by the other imaging stage, spe-

cifically during the capture process. Referring to FIG. **24**, to enter the capture mode (block **1600**) according to a first capture embodiment, the shutter button **42***a* is pressed half-way (S**1**) -—otherwise, the process returns to the preview mode. In the capture mode, a preview image is captured from the primary capture unit (block **1602**). The scene is next analyzed utilizing the captured preview image (block **1604**). When the analysis is complete (yes to block **1606**), the image processor **50** sets the primary capture unit parameters utilizing the results of the scene analysis (block **1608**). Then, using the set parameters, a preview image is captured and displayed from the primary capture unit (block **161 0**). When the shutter button **42***a* is fully pressed (S**2**) so as to initiate image capture (yes to block **1612**), a primary image is captured from the primary capture unit using the set parameters (block **1614**), and the process returns to the preview mode. If the shutter button **42***a* was not fully depressed (no to block **1612**), the camera checks to see if the focus or exposure lock is set (block **1616**). If it is (yes to block **1616**), the process loops back to block **1610** and another preview image is captured and displayed from the primary capture unit, the condition of the shutter button **42***a* is again checked (block **1612**), and the process continues as before. If the focus or exposure lock is not set (no to block **1616**), the process loops back to the block **1602** and a preview image is captured from the primary capture unit and the scene is analyzed utilizing the captured preview image (block **1604**). Then, the process continues as before.

[0137] Referring to FIG. **25**, to enter the capture mode (block **1700**) according to a second capture embodiment, the shutter button **42***a* is pressed (S**1**) half-way. Then, a preview image is captured from the primary capture unit (block **1702**). Next, an image is captured by the scene analysis capture unit (block **1704**), and the scene is analyzed utilizing both the captured preview image and the captured scene analysis image (block **1706**). The image processor **50** next sets the primary capture unit parameters utilizing the results of the combined scene analysis (block **1708**). Then, using the set parameters, a preview image is captured and displayed from the primary capture unit (block **1710**). Next, and as shown before in FIG. **24**, when the shutter button **42***a* is fully (S**2**) pressed (yes to block **1712**), a primary image is captured from the primary capture unit using the set parameters (block **1714**), and the process returns to the preview mode. If the shutter button **42***a* was not fully depressed, the camera checks to see if the focus or exposure lock is set (block **1716**). If it is, the process loops back to block **1710** and another preview image is captured and displayed from the primary capture unit (block **1710**), the condition of the shutter button **42***a* is checked (block **1712**), and the process continues as before. If the focus or exposure lock is not set (no to block **1716**), the process loops back to block **1702**, and a preview image is captured from the primary capture unit (block **1702**) and the scene is analyzed utilizing the captured preview image (block **1704**). Then, the process continues as before.

[0138] Referring to FIG. **26**, to enter the capture mode according to a third capture embodiment, the shutter button **42***a* is pressed (S**1**) half-way (block **1800**). Then, a preview image is captured from the primary capture unit (block **1802**) and an image is captured from the scene analysis capture unit (block **1804**). The scene is next analyzed utilizing both the captured preview image and the captured scene analysis image (block **1806**), and the image processor **50** sets the primary capture unit parameters utilizing the results of the combined scene analysis (block **1808**). The scene analysis capture unit is next designated as a secondary capture unit (block **1810**), and the image processor **50** sets the secondary capture unit parameters utilizing the results of the combined scene analysis (block **1812**). Next, when the shutter button **42***a* is fully (S**2**) pressed (yes to block **1814**), a primary image is captured from the primary capture unit using the set parameters (block **1816**) and an augmentation image is captured from the scene analysis capture unit (block **1818**), which is now designated the secondary capture unit. Then an enhanced image is produced by the image processor **50** from the primary and augmentation images (block **1820**), and the process returns to the preview mode. If the shutter button **42***a* was not fully pressed (block **1814**), the process loops back to block **1802** and the process is resumed by again capturing images from the primary capture unit and the scene analysis capture unit (blocks **1802** and **1804**).

[0139] In accordance with the invention, different types of augmentation or modification are contemplated in relation to FIG. **26**. In a first type of augmentation or modification, and as was depicted in connection with FIG. **14**, an image is captured from the primary capture unit at one focus position and another image is captured from the scene analysis capture unit (the secondary image capture unit) at another focus position. Then, the two images are combined into a modified image with a broadened depth of field. The advantage is that this can be done without having to stop down the aperture of the primary lens to obtain the greater depth of field, which is particularly useful for low light capture where a large aperture is preferred.

[0140] In another type of augmentation or modification according to the present invention, the image could be examined by the image processor **50** for its dynamic range. When the dynamic range exceeds a predetermined threshold, the scene analysis capture unit is used to produce a secondary image with different dynamic range than the primary image. For example, the primary image could be captured at a normal exposure, while the secondary image could be captured at more of an extreme exposure, i.e., either under- or over-exposed. Then, if for example, highlights are blown out in the primary exposure, the secondary exposure could be underexposed to capture detail in the highlights. Alternatively, if shadows are darkened in the primary exposure, the secondary exposure could be overexposed to capture detail in the shadows. Then, a modified image is created with a broadened dynamic range by replacing portions of the primary image with portions of the secondary image.

[0141] It should be understood that the images captured by the primary and secondary capture units could be a still image or a video image, and in the case of a video image could be a series of images. In either case, the still image or the series of images constituting the video signal may be modified in accordance with the particular form of augmentation described, according to the present invention. For instance, an electronic camera incorporating the capture units may produce a video image signal and the secondary output image is used to modify at least, e.g., the depth of field and/or the dynamic range of the series of images constituting the video image signal.

[0142] The flow diagram shown in FIG. **14** can be modified to obtain a primary image that is enhanced specifically for dynamic range according to the present invention. For instance, referring to FIG. **14**, when the shutter button **42***a* is pressed, a primary still image is captured (similar to blocks

510 or **530**) using the first (or second) image capture stage set to a primary exposure level. Then, (similar to blocks **512** or **532**) a secondary still image is captured using the second (or first image) capture stage set to a secondary exposure level. Then, (similar to blocks **514** or **534**) the secondary still image is used to enhance the dynamic range of the primary image, for instance, where the secondary exposure, which is underexposed to capture detail in the highlights, is combined with the primary image to obtain an extended dynamic range primary image.

[0143] In a preferred method for producing the modified image, a sliding scale is used to create the modified image in which the pixel values are determined by considering the pixel values of both the primary and secondary images, as described in commonly-assigned, copending U.S. patent application Ser. No. 11/460,364 (which was filed Jul. 27, 2006 in the names of John Border and Efrain Morales, and entitled "Producing an Extended Dynamic Range Digital Image"), which is incorporated herein by reference. It should be noted that having two exposure levels is to enable a correction for dynamic range is particularly important when using a flash, wherein overexposure conditions are often produced. Consequently, the exposure time of one of the capture stages will be set to a very short exposure or the timing of the exposure will be shifted to be either just before the flash or just after the flash.

[0144] The augmentation process can also be applied in connection with image pairs having different resolutions. For instance, in commonly-assigned, copending U.S. patent application Ser. No. 11/461,574 (which was filed Aug. 1, 2006 in the names of John Border, Scott Cahall and John Griffith, and entitled "Producing Digital Image with Different Resolution Portions"), which is incorporated herein by reference, a first wide angle digital image of a scene and a second telephoto digital image of a portion of substantially the same scene are captured by two capture stages. A composite image is then formed by combining a portion of the first wide angle digital image and a portion of the telephoto digital image, to produce a digital image with improved resolution during digital zooming. More specifically, digital zooming of the composite image produces a zoomed image with high resolution throughout the zoom range with improved image quality.

[0145] In a further embodiment of the invention, the primary capture stage and secondary capture stage are set for different exposure times so that different levels of noise and motion blur are present in the respective images. For example: the primary capture stage is set for a relatively long exposure so that the digital noise in the image is low, but any motion present either from movement of the camera or from movement of objects in the scene results in motion blur. Simultaneously, the secondary capture stage is set for a relatively fast exposure so that digital noise in the image is higher, but the motion blur is less. The primary image and the secondary image are then compared to one another to identify motion blur. The gain of the secondary image is increased so the average pixel values in the secondary image match those of the primary image. A modified image is then created by replacing portions of the primary image with portions of the secondary image. In effect, portions of the primary image (areas of lower noise but with some motion blur) are replaced with corresponding portions of the secondary image (areas of higher noise but little or no motion blur) to obtain a modified image with relatively low noise and good sharpness.

[0146] The invention has been described in detail with particular reference to certain preferred embodiments thereof, but it will be understood that variations and modifications can be effected within the spirit and scope of the invention.

PARTS LIST

[0147] **1** first imaging stage
[0148] **2** second imaging stage
[0149] **3** first zoom lens
[0150] **4** second zoom lens
[0151] **5***a* zoom and focus motors
[0152] **5***b* zoom and focus motors
[0153] **10**A digital camera
[0154] **12** first image sensor
[0155] **12***e* first sensor output
[0156] **13** clock drivers
[0157] **14** second image sensor
[0158] **14***e* second image output
[0159] **15** clock drivers
[0160] **16** third image sensor
[0161] **17** clock drivers
[0162] **22** first analog signal processor (ASP**1**) & A/D converter
[0163] **24** second analog signal processor (ASP**2**) & A/D converter
[0164] **25** third analog signal processor (ASP**2**) & A/D converter
[0165] **34** first digital multiplexer control element
[0166] **36** second digital multiplexer control element
[0167] **37** third digital multiplexer control element
[0168] **38** DRAM buffer memory
[0169] **40** control processor and timing generator
[0170] **42** user controls
[0171] **42***a* shutter button
[0172] **42***c* zoom button
[0173] **42***d* multi-position selector
[0174] **46** automatic exposure detector
[0175] **48** electronic flash
[0176] **50** image processor
[0177] **52** memory card interface
[0178] **54** removable memory card
[0179] **56** RAM memory
[0180] **57** GPS unit
[0181] **58** firmware memory
[0182] **59** electronic compass
[0183] **62** host interface
[0184] **64** interconnection
[0185] **66** host PC
[0186] **70** color LCD image display
[0187] **71** first image capture stage
[0188] **73** first fixed focal length lens
[0189] **74** third image capture stage
[0190] **75** third (zoom) lens
[0191] **90** cellular processor
[0192] **92** cellular modem
[0193] **94** antenna
[0194] **100** zoom lens setting block
[0195] **101** input zoom position block
[0196] **102** zoom position check block
[0197] **104** capture stage setting block
[0198] **106** second stage autofocus image capture block
[0199] **108** first stage focus block
[0200] **110** first stage preview capture and display block
[0201] **112** zoom button check block

[0202] **114** capture button check block
[0203] **116** first stage capture block
[0204] **118** first stage video capture block
[0205] **119** focus quality check block
[0206] **120** refocus check block
[0207] **124** capture stage setting block
[0208] **126** first stage autofocus image capture block
[0209] **128** second stage focus block
[0210] **130** second stage preview capture and display block
[0211] **132** zoom button check block
[0212] **134** capture button check block
[0213] **136** second stage capture block
[0214] **138** second stage video capture block
[0215] **139** focus quality check block
[0216] **140** refocus check block
[0217] **151** object
[0218] **152** first lens
[0219] **153** second lens
[0220] **154** first path
[0221] **155** second path
[0222] **156** focal plane
[0223] **157** first image
[0224] **158** second image
[0225] **170** first reference position
[0226] **171** first shifted position
[0227] **180** second reference position
[0228] **181** second shifted position
[0229] **190** first sensor array
[0230] **191** second sensor array
[0231] **197** low frequency bandpass filter loading stage
[0232] **198** comparison stage
[0233] **199** high frequency bandpass filter loading stage
[0234] **250** zoom position selection block
[0235] **252** image capture stage determination block
[0236] **254** non-capture stage zoom block
[0237] **256** hyperfocal setting block
[0238] **258** initiate autofocus sequence block
[0239] **260** capture autofocus images block
[0240] **262** crop and upsample block
[0241] **264** image correlation block
[0242] **266** best focus determination block
[0243] **268** focus lens movement block
[0244] **270** capture image block
[0245] **272** "hill climb" autofocus block
[0246] **274** capture button actuation block
[0247] **276** capture video block
[0248] **278** continuous "hill climb" focus check block
[0249] **280** focus check block
[0250] **282** best focus determination block
[0251] **284** focus lens movement block
[0252] **286** capture stage refocus block
[0253] **300** image sets capture block
[0254] **302** crop and upsample block
[0255] **304** correlate images block
[0256] **306** autofocus rangefinder calibration curve generation block
[0257] **350** representation of an autofocus image
[0258] **352** representation of a zoomed and cropped autofocus image
[0259] **400** image sets capture block
[0260] **402** position vs. distance comparison block
[0261] **404** autofocus "hill climb" calibration curve generation block
[0262] **440** lower focal length capture block
[0263] **442** crop and upsample lower focal length image block
[0264] **444** correlate images block
[0265] **446** determine focus correction block
[0266] **448** longer focal length capture block
[0267] **460** first stage "hill climb" first image capture block
[0268] **462** first stage preview image block
[0269] **464** refocus first stage block
[0270] **466** second stage "hill climb" second image capture block
[0271] **468** second stage another image capture block
[0272] **470** second stage focus conditions comparison block
[0273] **472** focus change check block
[0274] **480** correlate images block, determining pixel offsets
[0275] **482** pixel offset conversion block, using rangefinder calibration curve
[0276] **484** range map production block
[0277] **500** default zoom position block
[0278] **502** zoom position check block
[0279] **504** capture stage setting block
[0280] **506** second stage preview capture, display and autofocus block
[0281] **508** zoom button check block
[0282] **510** first stage primary image capture at primary focus block
[0283] **512** second stage secondary image capture at secondary focus block
[0284] **514** primary image enhancement block, using secondary image
[0285] **524** capture stage setting block
[0286] **526** first stage preview capture, display and autofocus block
[0287] **528** zoom button check block
[0288] **530** second stage primary image capture at primary focus block
[0289] **532** first stage secondary image capture at secondary focus block
[0290] **534** primary image enhancement block, using secondary image
[0291] **600** cell phone
[0292] **602** microphone
[0293] **604** speaker
[0294] **606** keypad
[0295] **608** (LCD) display
[0296] **610** cellular image capture assembly
[0297] **612** first fixed focal length lens
[0298] **614** first image sensor
[0299] **616** second fixed focal length lens
[0300] **618** second image sensor
[0301] **620** substrate
[0302] **622** IR cut filter
[0303] **624** electronic components
[0304] **626** flex connector
[0305] **628** auto focus subsystem
[0306] **630** z dimension
[0307] **750** camera GPS location block
[0308] **752** camera pointing direction block
[0309] **754** distance offsets block
[0310] **756** angular offsets block
[0311] **758** scene GPS locations block
[0312] **760** GPS location storage block
[0313] **1100** power on block

[0314] **1102** default setting block
[0315] **1104** capture and display block
[0316] **1106** preview selection block
[0317] **1108** shutter check block
[0318] **1110** display time check block
[0319] **1112** set default capture unit block
[0320] **1114** set scene analysis capture unit block
[0321] **1124** set selected primary capture unit block
[0322] **1200** scene analysis block
[0323] **1202** set capture parameters block
[0324] **1204** capture and display preview image block
[0325] **1206** scene analysis block
[0326] **1208** scene condition check block
[0327] **1300** capture scene analysis image block
[0328] **1302** set capture parameters block
[0329] **1304** capture and display preview image block
[0330] **1306** scene analysis block
[0331] **1308** scene condition threshold check block
[0332] **1400** zoom position setting block
[0333] **1402** capture scene analysis image block
[0334] **1404** set capture parameters block
[0335] **1406** capture preview image block
[0336] **1408** scene analysis block, using preview and scene analysis data
[0337] **1410** set primary capture parameters block
[0338] **1412** capture and display preview image block
[0339] **1414** capture scene analysis image block
[0340] **1416** scene analysis block, using preview and scene analysis data
[0341] **1418** scene condition threshold check block
[0342] **1500** zoom button check block
[0343] **1502** zoom position check block
[0344] **1504** reverse capture unit assignment block
[0345] **1506** set primary capture unit zoom position block
[0346] **1600** shutter button check block
[0347] **1602** capture preview image block
[0348] **1604** scene analysis using preview image block
[0349] **1606** analysis complete check block
[0350] **1608** set primary capture parameters block
[0351] **1610** capture and display preview image block
[0352] **1612** shutter button check block
[0353] **1614** capture primary image block
[0354] **1616** focus/exposure lock check block
[0355] **1700** shutter button check block
[0356] **1702** capture preview image block
[0357] **1704** capture scene analysis image block
[0358] **1706** scene analysis using preview and scene image block
[0359] **1708** set primary capture parameters block
[0360] **1710** capture and display preview image block
[0361] **1712** shutter button check block
[0362] **1714** capture primary image block7
[0363] **1716** focus/exposure lock check block
[0364] **1800** shutter button check block
[0365] **1802** capture preview image block
[0366] **1804** capture scene analysis image block
[0367] **1806** scene analysis using preview and scene image block
[0368] **1808** set primary capture parameters block
[0369] **1810** set scene analysis capture unit as secondary capture unit block
[0370] **1812** set secondary capture parameters block
[0371] **1814** shutter button check block
[0372] **1816** capture primary image block
[0373] **1818** capture augmentation image block
[0374] **1820** produce enhanced image block

What is claimed is:

1. An electronic camera for producing an output image of a scene from a captured image signal, said electronic camera comprising:

a first imaging stage comprising a first image sensor for generating a first sensor output and a first lens for forming a first image of the scene on the first image sensor;

a second imaging stage comprising a second image sensor for generating a second sensor output and a second lens for forming a second image of the scene on the second image sensor; and

a processing stage for using the sensor output from the first imaging stage as a primary output image for forming the captured image signal and using the sensor output from the second imaging stage as a secondary output image for modifying the primary output image, thereby generating an enhanced, captured image signal.

2. The electronic camera as claimed in claim **1** wherein the secondary output image is used by the processing stage to sharpen portions of the primary image.

3. The electronic camera as claimed in claim **2** wherein the secondary output image is used by the processing stage to extend the depth of field of the primary still image.

4. The electronic camera as claimed in claim **2** wherein the secondary output image is used by the processing stage to selectively sharpen portions of the primary still image and defocus other portions of the image.

5. The electronic camera as claimed in claim **1** wherein the secondary output image is captured by the second imaging stage at a different focus position than used by the first imaging stage to capture the primary output image.

6. The electronic camera as claimed in claim **1** wherein the secondary output image is used by the processing stage to modify the dynamic range of the primary image.

7. The electronic camera as claimed in claim **1** wherein the secondary output image is captured by the second imaging stage at a different exposure level than used by the first imaging stage to capture the primary output image.

8. The electronic camera as claimed in claim **1** wherein the primary and secondary output images are submitted to an external processor and the secondary output image is used by the external processor to modify the primary output image.

9. The electronic camera as claimed in claim **1** wherein the captured image signal is a still image signal and the secondary output image modifies at least one of the depth of field and the dynamic range of the still image signal.

10. The electronic camera as claimed in claim **1** wherein the captured image signal is a video image signal and the secondary output image modifies at least one of the depth of field and the dynamic range of the video image signal.

11. The electronic camera as claimed in claim **1** wherein the imaging stages are set for different exposure times so that different levels of noise and motion blur are present in the respective primary and secondary output images, whereby a modified primary image is then formed by replacing portions of the primary image with portions of the secondary image such that the level of motion blur is reduced while minimizing an increase in the noise level.

12. An electronic camera for producing an output image of a scene from a captured image signal, said electronic camera comprising:

a first imaging stage comprising a first image sensor for generating a first sensor output, a first lens for forming a first image of the scene on the first image sensor, and a first lens focus adjuster for adjusting focus of the first lens responsive to a first focus detection signal;

a second imaging stage comprising a second image sensor for generating a second sensor output, a second lens for forming a second image of the scene on the second image sensor, and a second lens focus adjuster for adjusting focus of the second lens responsive to a second focus detection signal; and

a processing stage for (a) selecting the sensor output from the first imaging stage as a primary output image for forming the captured image signal and using the sensor output from one or both of the first and second imaging stages to focus the first lens at a primary focus distance to provide the primary output image, and (b) selecting the sensor output from the second imaging stage as a secondary output image and using the sensor output from the second imaging stage to generate the second focus detection signal to focus the second lens at a secondary focus distance to provide a secondary still image, whereby the secondary output image is used to modify the primary output image and generate an enhanced captured image signal.

13. The electronic camera as claimed in claim **12** wherein the secondary output image is used to sharpen portions of the primary still image that are positioned near the secondary focus distance.

14. The electronic camera as claimed in claim **13** wherein the processing stage uses the secondary output image to sharpen portions of the primary still image that are positioned near the secondary focus distance.

15. The electronic camera as claimed in claim **13** wherein the primary and secondary output images are submitted to an external processor and the secondary output image is used by the external processor to sharpen portions of the primary still image that are positioned near the secondary focus distance.

16. The electronic camera as claimed in claim **12** wherein the processing stage selects either (a) the sensor output from the first imaging stage as the primary output image and uses the sensor output from the second imaging stage to generate the secondary output image and the first focus detection signal for the selected primary imaging stage or (b) the sensor output from the second imaging stage as the primary output image and uses the sensor output from the first imaging stage to generate the secondary output image and the second focus detection signal for the selected primary imaging stage, whereby the focus detection signal is applied to the lens focus adjuster of the selected primary imaging stage in order to adjust the focus of the image providing the sensor output for the primary output image.

17. A method for operating a digital camera having first and second imaging stages for forming separate images of a scene, said method comprising the steps of:

selecting one of the imaging stages as a primary capture unit which is to be primarily used for capturing an image of the scene that is stored by the digital camera;

using the imaging stage not selected as the primary capture unit as a scene analysis capture unit for capturing scene data;

generating scene analysis data from the scene data for setting the capture parameters for the primary capture unit; and

capturing and displaying a preview image from the primary capture unit using the capture parameters generated from the scene analysis data.

18. The method as claimed in claim **17** further comprising the steps of:

capturing a further image from the scene analysis capture unit and generating new scene data;

determining from the new scene data if scene conditions have changed; and

resetting the capture parameters for the primary capture unit if the scene conditions have changed.

19. The method as claimed in claim **18** wherein the changed scene conditions are compared to a threshold and the capture parameters for the primary capture unit are reset if the change in scene conditions exceeds the threshold.

20. The method as claimed in claim **17** further comprising the steps of: analyzing the scene using the preview image and the scene analysis data;

capturing and displaying a new preview image from the primary capture unit using capture parameters generated from the preview image and the scene analysis data;

capturing a further scene image from the scene analysis capture unit and generating new scene data;

determining from an analysis of the new scene data and the new preview image if scene conditions have changed; and

resetting the capture parameters for the primary capture unit if the scene conditions have changed.

21. A method for operating a digital camera having first and second imaging stages for forming separate images of a scene, wherein each imaging stage has a zoom lens, said method comprising the steps of:

selecting one of the imaging stages as a primary capture unit which is to be primarily used for capturing an image of the scene that is stored by the digital camera, wherein the primary capture unit has a predetermined zoom range;

using the imaging stage not selected as the primary capture unit as a scene analysis capture unit for capturing scene data;

requesting a zoom position for the digital camera;

determining whether the requested zoom position is within the predetermined zoom range of the primary capture unit; and

reversing the imaging units if the requested zoom position is not within the predetermined zoom range, whereby the primary capture unit becomes the scene analysis capture unit and the scene analysis capture unit becomes the primary capture unit.

22. A method for operating a digital camera having first and second imaging stages for forming separate images of a scene, wherein the camera includes a shutter button for initiating an image exposure, said method comprising the steps of:

selecting one of the imaging stages as a primary capture unit which is to be primarily used for capturing an image of the scene that is stored by the digital camera;

responsive to initial actuation of the shutter button, capturing an initial preview image from the primary capture unit;

using the imaging stage not selected as the primary capture unit as a scene analysis capture unit for capturing scene data;

generating scene analysis data from the initial preview image and the scene data for setting the capture parameters for the primary capture unit; and

capturing and displaying another preview image from the primary capture unit using the capture parameters generated from the scene analysis data.

23. The method as claimed in claim **22** further comprising the step of:

responsive to further actuation of the shutter button, capturing a primary image from the primary capture unit using the capture parameters generated from the preview image and the scene analysis data.

24. A method for operating a digital camera having first and second imaging stages for forming separate images of a scene, wherein the camera includes a shutter button for initiating an image exposure, said method comprising the steps of:

using one of the imaging stages as a primary capture unit for capturing an image of the scene that is stored by the digital camera, and using the other imaging stage as a scene analysis capture unit for capturing an analysis image;

responsive to initial actuation of the shutter button, capturing a preview image from the primary capture unit;

capturing an analysis image from the scene analysis capture unit;

generating scene analysis data from the preview image and the analysis image for setting the capture parameters for the primary capture unit;

using the scene analysis capture unit as a secondary capture unit to capture an augmentation image;

responsive to further actuation of the shutter button, capturing a primary image from the primary capture unit and capturing an augmentation image from the secondary capture unit, in each case using the capture parameters generated from the preview image and the scene analysis data; and

producing an enhanced image from the primary and augmentation images.

25. A method for operating a digital camera having first and second imaging stages for forming separate images of a scene, wherein the camera includes a shutter button for initiating an image exposure, said method comprising the steps of:

using one of the imaging stages as a primary capture unit for capturing a primary image of the scene, and using the other imaging stage as a secondary capture unit for capturing a secondary image that is used to modify the primary image;

responsive to actuation of the shutter button, capturing a primary image from the primary capture unit and capturing a secondary image from the secondary capture unit; and

producing an enhanced primary image from the primary and secondary images.

26. The method as claimed in claim **25** wherein the capture parameters include an exposure value and the secondary image is captured at a different exposure value than the primary image, whereby the enhanced primary image extends the dynamic range of the primary image.

27. The method as claimed in claim **25** wherein the capture parameters include a focus position value and the secondary image is captured at a different focus position than the primary image, whereby the enhanced primary image modifies the depth of field of the primary image.

28. The method as claimed in claim **25** wherein the exposure value and focus position value are user-adjustable capture parameters that are set by the user of the camera for a particular image exposure.

29. The method as claimed in claim **28** wherein the exposure value and focus position value are set by the user of the camera such that the primary and secondary images are captured as images at the same exposure value and focus position, whereby the enhanced image is a stereo image generated from the primary and secondary images.

30. The method as claimed in claim **25** wherein the secondary capture unit is further used to capture an analysis image for scene analysis, said method further comprising the step of:

obtaining scene analysis data from the analysis image; and

generating capture parameters for the primary and secondary capture units from the scene analysis data, whereby the capture parameters are used by the primary capture unit for capturing the primary image and by the secondary capture unit for capturing the augmentation image.

31. A method for operating a digital camera having first and second imaging stages for forming separate images of a scene, said method comprising the steps of:

using the image from the first imaging stage as a primary output image for forming a captured image signal;

using the image from the second imaging stage as a secondary output image having attributes useful for modifying the primary output image; and

augmenting the primary output image with the secondary output image, thereby generating an enhanced, captured image signal.

32. The method as claimed in claim **31** wherein the secondary output image is used to sharpen portions of the primary image.

33. The method as claimed in claim **32** wherein the secondary output image is used to extend the depth of field of the primary still image.

34. The method as claimed in claim **32** wherein the secondary output image is used to selectively sharpen portions of the primary still image and defocus other portions of the image.

35. The method as claimed in claim **31** wherein the secondary output image is captured by the second imaging stage at a different focus position than used by the first imaging stage to capture the primary output image.

36. The method as claimed in claim **31** wherein the secondary output image is used to modify the dynamic range of the primary image.

37. The method as claimed in claim **31** wherein the secondary output image is captured by the second imaging stage at a different exposure level than used by the first imaging stage to capture the primary output image.

38. The method as claimed in claim **31** wherein the captured image signal is a still image signal and the secondary output image modifies at least one of the depth of field and the dynamic range of the still image signal.

39. The method as claimed in claim **31** wherein the captured image signal is a video image signal and the secondary output image modifies at least one of the depth of field and the dynamic range of the video image signal.

40. The electronic camera as claimed in claim **31** wherein the imaging stages are set for different exposure times so that

different levels of noise and motion blur are present in the respective primary and secondary output images, whereby a modified primary image is then formed by replacing portions of the primary image with portions of the secondary image such that the level of motion blur is reduced while minimizing an increase in the noise level.

* * * * *